NOT MEASUREMENT SENSITIVE

MIL-STD-40051-2
w/Change 3
21 March 2008

SUPERSEDING
MIL-STD-40051-2
w/Change 2
30 July 2007
MIL-PRF-63003B(TM)
w/Amendment 1
15 November 2001

DEPARTMENT OF DEFENSE STANDARD PRACTICE

PREPARATION OF DIGITAL TECHNICAL INFORMATION FOR PAGE-BASED TECHNICAL MANUALS

AMCS 7542 AREA TMSS

DISTRIBUTION STATEMENT A. Approved for public release; distribution is unlimited.

Source: https://assist.dla.mil -- Downloaded: 2016-12-09T23:32Z
Check the source to verify that this is the current version before use.

FOREWORD

1. This standard is approved for use by the Department of the Army and the Department of the Marine Corps and is available for use by all Departments and Agencies of the Department of Defense (DoD).

2. This standard establishes the technical content requirements and mandatory style and format requirements for the preparation of technical manuals (TMs) and subsequent revisions required to support the various types of equipment and weapon systems within the Department of the Army and Department of the Marine Corps. The requirements contained in this standard cover operation and maintenance at all levels through overhaul (depot), including Depot Maintenance Work Requirements (DMWRs) and National Maintenance Work Requirements (NMWRs).

3. This 2-part book form consists of the following parts.

MIL-STD-40051-1	—	Preparation of Digital Technical Information for Interactive Electronic Technical Manuals (IETM)
MIL-STD-40051-2	—	Preparation of Digital Technical Information for Page-Based Technical Manuals

4. Comments, suggestions, or questions should be addressed to USAMC Logistics Support Activity, ATTN:AMXLS-AP, Redstone Arsenal, Al 35898-7466 or emailed to logsa.tmss@conus.army.mil. Since contact information can change, you may want to verify the currency of this address information using the ASSIST Online database at http://assist.daps.dla.mil/online/start/.

Source: https://assist.dla.mil -- Downloaded: 2016-12-09T23:32Z
Check the source to verify that this is the current version before use.

SUMMARY OF CHANGE 2 MODIFICATIONS

The following modifications to MIL-STD-40051-2 have been made:

Paragraph/Figure/Table	Modification
3.52	Changed
3.138	Changed
Figure E-4	Changed
F.5.3.5.3 (Part in quotes)	Changed
F.5.3.5A	Added
F.5.3.5.1A	Added
F.5.3.5.2A	Added
F.5.3.5.3A	Added
F.5.3.5.4A	Added
Figure F-5	Changed
Figure F-7	Changed
Figure F-8	Changed
Figure F-9	Changed
Figured F-10	Changed
Figure F-14	Changed
G.5.3.3.3 (part in quotes)	Changed
G.5.3.4.4c(1)	Changed
G.5.6.3 (part in quotes)	Changed
Figure G-4	Changed
Figure G-7	Changed

Source: https://assist.dla.mil -- Downloaded: 2016-12-09T23:32Z
Check the source to verify that this is the current version before use.

This page intentionally left blank.

Source: https://assist.dla.mil -- Downloaded: 2016-12-09T23:32Z
Check the source to verify that this is the current version before use.

CONTENTS

PARAGRAPH PAGE

FOREWORD ..... **ii**

1. SCOPE **1**
1.1 Scope 1
1.2 Paragraphs with limited applicability 1
1.3 Use of the technical content 1

2. APPLICABLE DOCUMENTS **1**
2.1 General 1
2.2 Government documents 1
2.2.1 Specifications, standards and handbooks 1
2.2.2 Other Government documents and publications 3
2.3 Non-Government publications 4
2.4 Order of precedence 5

3. DEFINITIONS **5**

4. GENERAL REQUIREMENTS **21**
4.1 General 21
4.2 Types of technical manuals 21
4.3 Selective application and tailoring 21
4.4 Preparation of digital data for electronic delivery 21
4.5 Use of the DTDs/Style sheets 21
4.6 Obtaining the DTDs/Style sheets 21
4.7 Style and format 22
4.7.1 Examples of style and format 22
4.7.2 TM divisions 22
4.7.2.1 Volume size and content 22
4.7.2.2 Chapters 23
4.7.2.3 Work packages 23
4.7.2.3.1 Work package size 23
4.7.2.3.2 Work package content 23
4.7.2.3.3 Development of individual work packages 23
4.7.3 Type size and style 24
4.7.4 Page size and orientation 24
4.7.5 Foldout pages 24
4.7.6 Final reproducible copy (FRC) 25
4.7.7 Warnings, cautions, and notes 25
4.7.7.1 Warning <warning> 25
4.7.7.2 Caution <caution> 25
4.7.7.3 Notes <note> 25
4.7.7.4 Display of warnings, cautions and notes 25
4.7.7.5 Icons 26
4.7.7.5.1 Development of icons 26
4.7.7.5.2 Safety warnings with icons <icon> 26
4.7.7.5.3 Hazardous materials warnings <warning> 26

Source: https://assist.dla.mil -- Downloaded: 2016-12-09T23:32Z
Check the source to verify that this is the current version before use.

CONTENTS

PARAGRAPH PAGE

4.7.7.5.3.1 Format for hazardous materials warnings with icons <icon> 26
4.7.7.5.3.2 Abbreviated format hazardous materials warnings with icons <icon> 27
4.7.7.5.4 Equipment damage caution icons <icon>> 27
4.7.8 Chapters 27
4.7.8.1 Chapter title page <titlepg> 27
4.7.8.2 Chapter numbering 27
4.7.9 Work packages 27
4.7.9.1 Work package identification information <wpidinfo> 27
4.7.9.2 Initial setup information <wpinfo> 28
4.7.9.3 Work package sequential numbering 30
4.7.9.3.1 Assignment of new work packages sequence numbers for a change 30
4.7.9.3.2 Deletion of work packages in a change 30
4.7.9.3.3 Assignment of work package sequence numbers in volumized TMs 30
4.7.9.4 Work package page numbering 30
4.7.9.5 Work package identification number 31
4.7.10 Maintenance tasks and descriptive information 32
4.7.11 Paragraphs 32
4.7.11.1 Paragraph numbering 32
4.7.11.2 Paragraphs and subparagraph titles 32
4.7.11.2.1 Format 32
4.7.12 Procedural steps 32
4.7.12.1 Procedural step levels 33
4.7.12.2 Procedural step titles 33
4.7.13 Tables and lists 33
4.7.13.1 Table locations 33
4.7.13.2 Table numbering 33
4.7.13.3 Table titles 33
4.7.13.4 Table format 34
4.7.13.5 Standard information tables 34
4.7.13.6 Footnotes to tables 35
4.7.13.7 Tabular information 35
4.7.13.8 Lists 35
4.7.14 Placement of text 35
4.7.15 Placement of illustrations 35
4.7.15.1 Rotating illustrations 35
4.7.15.2 Placement of text and related illustrations for pocket TMs 35
4.7.15.3 Repeating illustrations 35
4.7.16 Margin data 36
4.7.16.1 Headers 36
4.7.16.2 Footers 36
4.7.16.2.1 Page numbering 36
4.7.16.2.1.1 Front matter 36
4.7.16.2.1.2 Rear matter 36
4.7.16.2.1.3 Blank pages 36
4.7.16.2.1.4 Foldout page numbers 36

Source: https://assist.dla.mil -- Downloaded: 2016-12-09T23:32Z
Check the source to verify that this is the current version before use.

CONTENTS

PARAGRAPH PAGE

4.7.17 Abbreviations and acronyms....37
4.7.18 Symbols....37
4.7.18.1 General information for symbols....37
4.7.18.2 Metric symbols....37
4.7.19 Nuclear hardness (hardness-critical processes) marking....37
4.7.20 Electrostatic Discharge (ESD) sensitive marking....38
4.7.21 Quality Assurance (QA)....38
4.7.22 Security classification, emergency page and protective markings....38
4.7.22.1 Security classification markings....38
4.7.22.2 Overall security classification....38
4.7.22.3 Blank page backing a classified page....39
4.7.22.4 Emergency page markings....39
4.7.22.5 Protective markings....39
4.7.22.6 COMSEC protective markings....39
4.7.23 Referencing....39
4.7.23.1 Other documents....39
4.7.23.2 Government specifications and standards....39
4.7.23.3 Referencing within the TM....39
4.7.23.3.1 TM divisions....39
4.7.23.3.2 Volumes....39
4.7.23.3.3 Work packages....39
4.7.23.3.4 Maintenance tasks, procedures, and paragraphs....39
4.7.23.3.5 Tables....39
4.7.23.3.6 Footnotes....40
4.7.23.3.7 Figures and multisheet figures....40
4.7.23.3.8 Index numbers....40
4.7.23.3.9 Items on diagrams....40
4.7.23.4 Repeating information....40
4.7.23.5 Equipment, components, and parts....40
4.7.23.6 National Stock Numbers (NSNs) and Part Numbers (P/Ns)....40
4.7.23.7 Equipment panel markings (placarding)....40
4.7.23.8 Metric and U.S standard measurements....40
4.7.23.9 Temperature....40
4.7.24 Equations....40
4.7.25 Nomenclature....41
4.7.25.1 Nomenclature consistency and applicability....41
4.7.25.2 Official/approved nomenclature....41
4.7.25.3 Military terms....41
4.7.25.4 Automatic electronic test and checkout terminology....41
4.7.26 Comprehensibility....41
4.7.27 Graphics....41
4.7.27.1 Graphic format....41
4.7.27.2 Types of graphics....41
4.7.27.2.1 Line drawings....41
4.7.27.2.2 Multiview and multisheet illustrations....42

Source: https://assist.dla.mil -- Downloaded: 2016-12-09T23:32Z
Check the source to verify that this is the current version before use.

CONTENTS

PARAGRAPH PAGE

4.7.27.2.3 Photographs....42
4.7.27.2.3.1 Photograph quality....42
4.7.27.2.3.2 Retouching....42
4.7.27.2.3.3 Use of photographs in place of line drawings....42
4.7.27.2.4 Engineering drawings....42
4.7.27.2.5 Diagrams....42
4.7.27.2.5.1 Diagram specifications....42
4.7.27.2.5.2 Types of diagrams....42
4.7.27.2.6 Charts and graphs....43
4.7.27.2.7 Tools and test equipment illustrations....43
4.7.27.3 Elements of illustrations....43
4.7.27.3.1 Border rules and boxes....43
4.7.27.3.2 Use of the human figure....43
4.7.27.3.3 Credit lines....43
4.7.27.3.4 Callouts....43
4.7.27.3.4.1 Index numbers....43
4.7.27.3.4.2 Leader lines and arrowheads....44
4.7.27.3.5 Illustration legends....44
4.7.27.3.6 Procedures on illustrations....44
4.7.27.4 Graphic techniques....44
4.7.27.4.1 Figure numbers....44
4.7.27.4.2 RPSTL figure numbering....44
4.7.27.4.3 Foldout figure numbering....44
4.7.27.4.4 Multisheet numbering....44
4.7.27.4.5 Figure titles....44
4.7.27.4.5.1 Figure title format....44
4.7.27.4.5.2 Figure title placement....45
4.7.27.4.6 Illustration identification numbers....45
4.7.27.4.7 Portraying signal flow....45
4.7.27.4.8 Color in illustrations....45
4.8 Changes/Revisions....45
4.8.1 Changes for TMs....45
4.8.1.1 Changes....45
4.8.1.2 Changed work packages....45
4.8.1.3 Changed front and rear matter pages....46
4.8.1.4 Change symbols for text and tables....46
4.8.1.5 Change symbols for illustrations....46
4.8.1.6 Changes to RPSTL work packages....47
4.8.2 Complete TM revisions....47

5. DETAILED REQUIREMENTS....47
5.1 Technical content preparation....47
5.2 Preparation of front and rear matter....48
5.2.1 Front matter <paper.frnt>....48
5.2.1.1 Front cover <frntcover>....48

Source: https://assist.dla.mil -- Downloaded: 2016-12-09T23:32Z
Check the source to verify that this is the current version before use.

CONTENTS

PARAGRAPH PAGE

5.2.1.1.1 TM number for joint service TMs <tminfono> 49
5.2.1.1.2 National Overhaul Standards statement (TM/NMWR/DMWR with NMP Overhaul Standards Only)....49
5.2.1.1.3 Weapon system name <weapon-system> 49
5.2.1.1.4 Availability statement (DMWR/NMWR only) <avail> 49
5.2.1.1.5 Supersedure notice for revisions only <super>....49
5.2.1.1.6 Disclosure notice <disclos> 50
5.2.1.1.7 Distribution statement <dist>....50
5.2.1.1.8 Export Control Warning <export>....50
5.2.1.1.9 Destruction notice <destr>....50
5.2.1.1.10 General purpose notice <general_purpose_notice>....50
5.2.1.1.11 Service nomenclature <servnomen>....50
5.2.1.1.12 TM Publication date <date> 50
5.2.1.1.13 For Army communications security (COMSEC) manuals use....50
5.2.1.2 (MC) Promulgation letter <promulgation>....50
5.2.1.3 Warning summary (including first aid data) <warnsum>....51
5.2.1.3.1 First Aid <first_aid> 51
5.2.1.4 Change transmittal page <chgsheet> 51
5.2.1.5 List of effective pages/work packages <loepwp>....51
5.2.1.5.1 Types of publications....51
5.2.1.5.2 Exempted publications....52
5.2.1.5.3 Types of pages to be included....52
5.2.1.5.4 Exempted pages 52
5.2.1.5.5 Change numbers....52
5.2.1.5.6 Listing the pages 52
5.2.1.5.7 Numbering the list of effective pages/work packages 53
5.2.1.5.8 List of effective pages/work packages for RPSTLS 53
5.2.1.5.9 Multi-service manuals....53
5.2.1.5.10 Multi-volume manuals 53
5.2.1.5.11 Dates of Issue for changes 53
5.2.1.6 Title block page <titleblk>....53
5.2.1.6.1 Reporting errors and recommending improvements statement <reporting>...53
5.2.1.7 Preventive maintenance services and phased maintenance inspection manuals title block page with warning data (Aviation only)....56
5.2.1.8 Table of contents <contents>....57
5.2.1.9 “How To Use This Manual” information (Except RPSTLs and DMWRs/NMWRs) <howtouse> 58
5.2.1.9.1 International standardization agreements 58
5.2.2 Rear matter <rear> 59
5.2.2.1 Glossary (Except RPSTL) <glossary>....59
5.2.2.2 Alphabetical index (Except RPSTL) <aindx> 59
5.2.2.3 Reporting errors and recommending improvements DA Form 2028 <da2028> 59
5.2.2.4 Authentication page <authent>....59
5.2.2.5 Foldout pages (Except RPSTL) <foldsect> 59

Source: https://assist.dla.mil -- Downloaded: 2016-12-09T23:32Z
Check the source to verify that this is the current version before use.

CONTENTS

PARAGRAPH PAGE

5.2.2.6 Blank forms 59
5.2.2.7 Back cover <back> 60

6. NOTES 60
6.1 Intended use 60
6.2 Acquisition Requirements 60
6.3 Tailoring guidance 60
6.4 DELETED 60
6.5 Subject Term (Keyword) Listing 60
6.6 Change notations 61

A CONTENT SELECTION MATRIXES 95

A.1 SCOPE 95
A.1.1 Scope 95

A.2 APPLICABLE DOCUMENTS 95

A.3 DEFINITIONS 95

A.4 GENERAL REQUIREMENTS 95

A.5 DETAILED REQUIREMENTS 95
A.5.1 Tailoring requirements for technical manuals 95
A.5.1.1 Publication Titles 95
A.5.1.2 Technical content tables 98
A.5.2 Intended use 98
A.5.3 Acquisition requirements 99

B GENERAL INFORMATION, EQUIPMENT DESCRIPTION, AND THEORY OF OPERATION 171

B.1 SCOPE 171
B.1.1 Scope 171

B.2 APPLICABLE DOCUMENTS 171

B.3 DEFINITIONS 171

B.4 GENERAL REQUIREMENTS 171
B.4.1 General 171
B.4.2 Maintenance level applicability 171
B.4.3 Preparation of digital data for electronic delivery 171
B.4.4 Use of the DTD/XSLs 171
B.4.5 Content structure and format 172
B.4.6 Style and format 172
B.4.7 Work package development 172

Source: https://assist.dla.mil -- Downloaded: 2016-12-09T23:32Z
Check the source to verify that this is the current version before use.

CONTENTS

PARAGRAPH PAGE

B.4.8 Safety devices and interlocks 172
B.4.9 Electrostatic discharge (ESD) sensitive parts 172
B.4.10 Nuclear hardness 172
B.4.11 Selective application and tailoring 172

B.5 DETAILED REQUIREMENTS 173
B.5.1 Preparation of general information, equipment description, and theory of operation 173
B.5.1.1 Required general information, equipment description, and theory of operation data work packages 173
B.5.2 General information work package <ginfowp> 173
B.5.2.1 Work package identification information <wpidinfo> 173
B.5.2.2 Initial setup information <wpinfo> 173
B.5.2.3 Scope <scope> 173
B.5.2.4 Maintenance forms, records, and reports <mfrr> 174
B.5.2.5 Reporting equipment improvement recommendations <eir> 175
B.5.2.5.1 (MC) Additional reporting equipment improvement recommendations Marine Corps TMs 175
B.5.2.6 Hand receipt (HR) manuals (Field or below only) <handreceipt> 175
B.5.2.7 Corrosion prevention and control <cpcdata> 175
B.5.2.8 Ozone depleting substances (ODS) <odsdata> 176
B.5.2.9 Destruction of Army materiel to prevent enemy use <destructmat> 176
B.5.2.10 Preparation for storage or shipment <pssref> 176
B.5.2.11 Warranty information <wrntyref> 176
B.5.2.12 Nomenclature cross-reference list <nomenreflist> 176
B.5.2.13 List of abbreviations/acronyms <loa> 176
B.5.2.14 Quality Assurance (QA) (DMWR/NMWR and aviation only) <qainfo> 177
B.5.2.15 Quality of material (Field and above only) <qual.mat.info> 177
B.5.2.16 Safety, care, and handling <sftyinfo> 177
B.5.2.17 Nuclear hardness <hcp> 178
B.5.2.18 Calibration <calref> 178
B.5.2.19 Engineering Change Proposals (ECPs) (DMWR/NMWR only) <ecp> 178
B.5.2.20 Modifications list (DMWR/NMWR only) <modification> 178
B.5.2.21 Deviations and exceptions (DMWR/NMWR only) <deviation> 179
B.5.2.22 Mobilization requirements (DMWR/NMWR only) <mobreq> 179
B.5.2.23 Flight safety critical aircraft parts (FSCAP) (Aircraft only) <fscapreq> 179
B.5.2.24 Cost considerations (DMWR/NMWR only) <cost> 179
B.5.2.25 Supporting information for repair parts, special tools, TMDE, and support equipment (Field and above only) <supdata> 180
B.5.2.25.1 Common tools and equipment 180
B.5.2.25.2 Special tools, TMDE, and support equipment 180
B.5.2.25.3 Repair parts 180
B.5.2.26 Copyright credit line <copyrt> 180
B.5.2.26.1 Proprietary names. 180
B.5.2.26.2 Advertising 180

Source: https://assist.dla.mil -- Downloaded: 2016-12-09T23:32Z
Check the source to verify that this is the current version before use.

CONTENTS

PARAGRAPH PAGE

B.5.3 Equipment description and data work package <descwp> 181
B.5.3.1 Work package identification information <wpidinfo> 181
B.5.3.2 Initial setup information <wpinfo> 181
B.5.3.3 Equipment characteristics, capabilities, and features <eqpinfo> 181
B.5.3.4 Location and description of major components (Except Conventional Ammunition and Chemical Manuals) <locdesc> 181
B.5.3.5 Differences between models <eqpdiff> 182
B.5.3.6 Equipment data <eqpdata> 182
B.5.4 Theory of operation work package (Except Conventional and Chemical Ammunition) <thrywp> 183
B.5.4.1 Work package identification information <wpidinfo> 183
B.5.4.2 Initial setup information <wpinfo> 183
B.5.4.3 Theory presentation 183
B.5.5 General information work package (Preventive Maintenance Services Manual only) <pms-ginfowp> 184
B.5.5.1 Work package identification information <wpidinfo> 184
B.5.5.2 Initial setup information <wpinfo> 184
B.5.5.3 Maintenance activities <scope> 184
B.5.5.4 General information <geninfo> 184
B.5.6 General information work package (Phased Maintenance Inspection Manual only) <pm-ginfowp> 186
B.5.6.1 Work package identification information <wpidinfo> 186
B.5.6.2 Initial setup information <wpinfo> 186
B.5.6.3 General information <geninfo> 186
B.5.6.3.1 Phased schedule 187
B.5.6.3.2 Additional general information 187

B.6 NOTES 190

C OPERATOR INSTRUCTIONS 193

C.1 SCOPE 193
C.1.1 Scope 193

C.2 APPLICABLE DOCUMENTS 193

C.3 DEFINITIONS 193

C.4 GENERAL REQUIREMENTS 193
C.4.1 General 193
C.4.2 Maintenance level applicability 193
C.4.3 Preparation of digital data for electronic delivery 193
C.4.4 Use of the DTD/XSLs 194
C.4.5 Content structure and format 194
C.4.6 Style and format 194

Source: https://assist.dla.mil -- Downloaded: 2016-12-09T23:32Z
Check the source to verify that this is the current version before use.

CONTENTS

PARAGRAPH PAGE

C.4.7 Work package development....194
C.4.8 Safety devices and interlocks....194
C.4.9 Electrostatic discharge (ESD) sensitive parts....194
C.4.10 Nuclear hardness....194
C.4.11 Selective application and tailoring....194

C.5 DETAILED REQUIREMENTS....195
C.5.1 Preparation of operator instructions....195
C.5.2 Operator instructions work packages....195
C.5.2.1 Work package content....195
C.5.2.2 Types of operator instructions work packages....195
C.5.2.3 Description and use of controls and indicators work package <ctrlindwp>..195
C.5.2.3.1 Work package identification information <wpidinfo>....195
C.5.2.3.2 Initial setup information <wpinfo>....195
C.5.2.3.3 Controls and indicators description tabular option....196
C.5.2.3.4 Controls and indicators description narrative option....196
C.5.2.4 Operation under usual conditions work package <opusualwp>....196
C.5.2.4.1 Work package identification information <wpidinfo>....196
C.5.2.4.2 Initial setup information <wpinfo>....196
C.5.2.4.3 Security measures for electronic data <secref>....196
C.5.2.4.4 Siting requirements <site>....197
C.5.2.4.5 Shelter requirements <shelter>....197
C.5.2.4.6 Assembly and preparation for use <prepforuse>....197
C.5.2.4.7 Initial adjustments, before use, and self-test <initial>....197
C.5.2.4.8 Operating procedures <oper>....198
C.5.2.4.8.1 Operating procedure considerations....198
C.5.2.4.8.2 Decals and instruction plates <instructplt>....199
C.5.2.4.9 Operating auxiliary equipment <operaux>....199
C.5.2.4.10 Preparation for movement <prepmove>....199
C.5.2.5 Operation under unusual conditions work package <opunuwp>....199
C.5.2.5.1 Work package identification information <wpidinfo>....199
C.5.2.5.2 Initial setup information <wpinfo>....199
C.5.2.5.3 Operations under unusual tasks <opunutsk>....199
C.5.2.5.3.1 Security measures for electronic data <secref>....199
C.5.2.5.3.2 Unusual environment/weather <unusualenv>....199
C.5.2.5.3.3 Fording and swimming <fording>....199
C.5.2.5.3.4 Interim Nuclear, Biological, and Chemical (NBC) decontamination procedures <decon>....200
C.5.2.5.3.5 Jamming and Electronic Countermeasures (ECM) procedures <ecm>....200
C.5.2.5.3.6 Degraded operation procedures <degraded>....200
C.5.2.6 Emergency work package <emergencywp>....200
C.5.2.6.1 Work package identification information <wpidinfo>....200
C.5.2.6.2 Initial setup information <wpinfo>....200
C.5.2.6.3 Emergency operation <emergency>....200
C.5.2.6.4 Emergency shutdown <emergency>....200

Source: https://assist.dla.mil -- Downloaded: 2016-12-09T23:32Z
Check the source to verify that this is the current version before use.

CONTENTS

PARAGRAPH PAGE

C.5.2.7 Stowage and decal/data plate guide work package <stowagewp> 200
C.5.2.7.1 Work package identification information <wpidinfo> 200
C.5.2.7.2 Initial setup information <wpinfo> 200
C.5.2.7.3 Introduction <intro> 200
C.5.2.7.4 Stowage guide <stowinfo> 200
C.5.2.7.5 Decal/data plate guide <decalinfo> 200
C.5.2.8 On-vehicle equipment loading plan work package <eqploadwp> 201
C.5.2.8.1 Work package identification information <wpidinfo> 201
C.5.2.8.2 Initial setup information <wpinfo> 201
C.5.2.8.3 Introduction <intro> 201
C.5.2.8.4 Illustrated loading plan list(s) <loaddesc> 201

C.6 NOTES 201

D TROUBLESHOOTING PROCEDURES 203

D.1 SCOPE 203
D.1.1 Scope 203

D.2 APPLICABLE DOCUMENTS 203

D.3 DEFINITIONS 203

D.4 GENERAL REQUIREMENTS 203
D.4.1 General 203
D.4.2 Development of troubleshooting instructions 203
D.4.3 Maintenance level applicability 204
D.4.5 Preparation of digital data for electronic delivery 204
D.4.5 Use of DTD/XSLs 204
D.4.6 Content structure and format 204
D.4.7 Style and format 204
D.4.8 Work package development 204
D.4.9 Safety devices and interlocks 204
D.4.10 Electrostatic discharge (ESD) sensitive parts 204
D.4.11 Nuclear hardness 205
D.4.12 Selective application and tailoring 205

D.5 DETAILED REQUIREMENTS 205
D.5.1 Testing and troubleshooting philosophy 205
D.5.2 Information to be provided 205
D.5.2.1 Methods of testing and troubleshooting 206
D.5.2.1.1 Manual (nonautomatic) troubleshooting 206
D.5.2.1.2 Semi-automatic or automatic testing and troubleshooting 206
D.5.2.1.3 Testing and troubleshooting using built-in-test equipment 206
D.5.2.1.4 Sensor derived failures 206
D.5.2.1.5 Failure interpretation 206

Source: https://assist.dla.mil -- Downloaded: 2016-12-09T23:32Z
Check the source to verify that this is the current version before use.

CONTENTS

PARAGRAPH PAGE

D.5.2.2 Types of testing and troubleshooting information 206
D.5.2.2.1 Fault reporting/fault isolation information 206
D.5.2.2.2 Integrated system testing and troubleshooting 207
D.5.2.2.2.1 Integrated systems having self-test or built-in test capability 207
D.5.2.2.2.2 Integrated systems requiring the use of system peculiar test sets 207
D.5.2.2.2.3 Integrated systems requiring the use of common test equipment 207
D.5.3 Troubleshooting procedures content 207
D.5.4 Types of testing and troubleshooting 208
D.5.4.1 Aviation testing and troubleshooting category (Aircraft Troubleshooting TMs only) <troubleaviationcategory> 208
D.5.4.2 Standard testing and troubleshooting category <troublecategory> 209
D.5.4.3 DMWR/NMWR testing and troubleshooting category (depot only) <troubledmwrnmwrcategory> 209
D.5.4.4 Master index testing and troubleshooting category <masterindexcategory> 209
D.5.5 Testing and troubleshooting work packages 209
D.5.5.1 Work package content 209
D.5.5.2 Types of testing and troubleshooting work packages 209
D.5.5.3 Introduction work package (Aircraft Troubleshooting TMs only) <tsintrowp> 210
D.5.5.3.1 Work package identification information <wpidinfo> 210
D.5.5.3.2 Initial setup information <wpinfo> 210
D.5.5.4 Technical description work packages <techdescwp> (Aircraft Troubleshooting Manuals only) 210
D.5.5.4.1 Work package identification information <wpidinfo> 210
D.5.5.4.2 Initial setup information <wpinfo> 210
D.5.5.4.3 Equipment description and data <descproc> 210
D.5.5.4.4 Controls and indicators <ctrlindproc> 210
D.5.5.4.5 Theory of operation <thryproc> 210
D.5.5.5 Troubleshooting index work package <tsindxwp> 210
D.5.5.5.1 Work package identification information <wpidinfo> 210
D.5.5.5.2 Initial setup information <wpinfo> 211
D.5.5.5.3 Malfunction/symptom index <tsindx.symptom>/<tsindx.messageword> 211
D.5.5.5.4 Master malfunction/symptom index <tsindx.symptom> 211
D.5.5.5.5 System/subsystem index <tsindx.system> 211
D.5.5.6 Preshop analysis work package (DMWR/NMWR only) <pshopanalwp> 211
D.5.5.6.1 Work package identification information <wpidinfo> 211
D.5.5.6.2 Initial setup information <wpinfo> 211
D.5.5.6.3 Scope <scope> 211
D.5.5.6.4 Preparation Procedures <proc> 212
D.5.5.6.5 Preshop analysis procedures <pshopanal> 212
D.5.5.7 Component checklist work package (DMWR/NMWR only) <compchklistwp> 213
D.5.5.7.1 Work package identification information <wpidinfo> 213
D.5.5.7.2 Initial setup information <wpinfo> 213

Source: https://assist.dla.mil -- Downloaded: 2016-12-09T23:32Z
Check the source to verify that this is the current version before use.

CONTENTS

PARAGRAPH PAGE

D.5.5.7.3 Introduction <intro>....213
D.5.5.7.4 Component checklist <compchklist>....213
D.5.5.8 Operational checkout and troubleshooting procedures work packages....213
D.5.5.8.1 Operational checkout and troubleshooting procedures content....213
D.5.5.8.2 Operational checkout and troubleshooting procedure work package development....214
D.5.5.8.3 Operational checkout work package <opcheckwp>....214
D.5.5.8.3.1 Work package identification information <wpidinfo>....214
D.5.5.8.3.2 Initial setup information <wpinfo>....214
D.5.5.8.3.3 Introduction <intro>....214
D.5.5.8.3.4 General procedures and precautions <proc>....214
D.5.5.8.3.5 Pretest setup procedures <hookup>....214
D.5.5.8.3.6 Operational checkout procedures <opcheckproc>....214
D.5.5.8.3.7 Post-operational shutdown procedures <disconnect>....215
D.5.5.8.4 Troubleshooting work package <tswp>....215
D.5.5.8.4.1 Work package identification information <wpidinfo>....215
D.5.5.8.4.2 Initial setup information <wpinfo>....215
D.5.5.8.4.3 Introduction <intro>....215
D.5.5.8.4.4 General procedures and precautions <proc>....215
D.5.5.8.4.5 Pretest setup procedures <hookup>....215
D.5.5.8.4.6 Troubleshooting procedures <tsproc>....216
D.5.5.8.4.7 Post-operational shutdown procedures <disconnect>....217
D.5.5.8.5 Combined operational checkout and troubleshooting work package <opcheck-tswp>....217
D.5.5.8.5.1 Work package identification information <wpidinfo>....217
D.5.5.8.5.2 Initial setup information <wpinfo>....217
D.5.5.8.5.3 Introduction <intro>....217
D.5.5.8.5.4 General procedures and precautions <proc>....217
D.5.5.8.5.5 Pretest setup procedures <hookup>....217
D.5.5.8.5.6 Operational checkout and troubleshooting procedures....217
D.5.5.8.5.7 Post-operational shutdown procedures <disconnect>....218
D.5.5.8.6 Integrated system troubleshooting procedures work packages....218

D.6 NOTES 218

E MAINTENANCE INSTRUCTIONS 227

E.1 SCOPE 227
E.1.1 Scope....227

E.2 APPLICABLE DOCUMENTS....227

E.3 DEFINITIONS....227

E.4 GENERAL REQUIREMENTS....227
E.4.1 General....227

Source: https://assist.dla.mil -- Downloaded: 2016-12-09T23:32Z
Check the source to verify that this is the current version before use.

CONTENTS

PARAGRAPH PAGE

E.4.2 Development of maintenance instructions 227
E.4.3 Maintenance level applicability 227
E.4.4 Depot Maintenance Work Requirement (DMWR) and National Maintenance Work Requirement (NMWR) 227
E.4.5 Preparation of digital data for electronic delivery 228
E.4.6 Use of the DTD/XSLs 228
E.4.7 Content structure and format 228
E.4.8 Style and format 228
E.4.9 Work package development 228
E.4.10 Safety devices and interlocks 228
E.4.11 Electrostatic discharge (ESD) sensitive parts 228
E.4.12 Nuclear hardness 228
E.4.13 Selective application and tailoring 229

E.5 DETAILED REQUIREMENTS 229
E.5.1 Preparation of maintenance instructions 229
E.5.2 Types of maintenance 229
E.5.2.1 Preventive Maintenance Checks and Services (PMCS) (Except for aircraft TMs, DMWR and NMWR) <pmcscategory> 229
E.5.2.2 Weapon system/equipment, component, assembly, subassembly, and software maintenance with required PMCS (Except for aircraft TMs, DMWR and NMWR) <maintenancepmcscategory> 229
E.5.2.3 Weapon system/equipment, component, assembly, subassembly, and software maintenance without PMCS (Except for aircraft TMs, DMWR and NMWR) <maintenancecategory> 230
E.5.2.4 Depot weapon system/equipment, component, assembly, and subassembly maintenance <depotcategory> 230
E.5.2.5 Aircraft maintenance (aircraft only) <aviationcategory> 231
E.5.2.6 Auxiliary equipment maintenance <auxiliarycategory> 231
E.5.2.7 Ammunition maintenance <ammunitioncategory> 231
E.5.2.8 Test and inspection maintenance (Conventional and chemical ammunition only) <testinspectioncategory> 231
E.5.2.9 Shipment/movement and storage maintenance (Conventional and chemical ammunition only) <shipmentmovementstoragecategory> 232
E.5.2.10 Ammunition marking maintenance (Conventional and chemical ammunition only) (Field or above only) <ammomarkingcategory> 232
E.5.2.11 Preventive maintenance services (Aircraft preventive maintenance services only) <pmscategory> 232
E.5.2.12 Phased maintenance inspections (Aircraft phased maintenance inspection only) <checklistcategory> 232
E.5.3 Maintenance work packages 232
E.5.3.1 Work package content 232
E.5.3.2 Service upon receipt work package (Field only) <surwp> 232
E.5.3.2.1 Work package identification information <wpidinfo> 232
E.5.3.2.2 Initial setup information <wpinfo> 232

Source: https://assist.dla.mil -- Downloaded: 2016-12-09T23:32Z
Check the source to verify that this is the current version before use.

CONTENTS

PARAGRAPH PAGE

E.5.3.2.3 Service upon receipt tasks <surtsk>....233
E.5.3.2.3.1 Siting <siting>....233
E.5.3.2.3.2 Shelter requirements <shltr>....233
E.5.3.2.3.3 Service upon receipt of materiel <surmat>....233
E.5.3.2.3.4 Installation instructions <install>....234
E.5.3.2.3.4.1 Assembly of equipment 235
E.5.3.2.3.4.2 Installation of the equipment 235
E.5.3.2.3.4.3 Special applications 236
E.5.3.2.3.4.4 Van and shelter installations 236
E.5.3.2.3.5 Preliminary servicing of equipment <preserv> 236
E.5.3.2.3.6 Preliminary checks and adjustment of equipment <prechkadj> 236
E.5.3.2.3.7 Preliminary calibration of equipment <precal> 237
E.5.3.2.3.8 Circuit alignment <calign> 237
E.5.3.2.3.9 Ammunition service upon receipt tasks 238
E.5.3.2.3.9.1 Ammunition markings <ammo.markings> 238
E.5.3.2.3.9.2 Classification of defects <ammo.defect> 238
E.5.3.2.3.9.3 Handling <ammo.handling> 238
E.5.3.2.3.9.4 Procedures needed to activate ammunition, mine, etc. <arm> 238
E.5.3.2.3.10 Other service upon receipt task <other.surtsk> 238
E.5.3.2.3.11 Follow-on maintenance <followon.maintsk> 238
E.5.3.3 Equipment / user fitting instructions work package (Field or above only) <perseqpwp> 238
E.5.3.4 Preventive maintenance checks and services (PMCS), including lubrication instructions (Except for Conventional and Chemical Ammunition, aircraft TMs, DMWR and NMWR) 239
E.5.3.4.1 PMCS introduction work package <pmcsintrowp> 239
E.5.3.4.1.1 Work package identification information <wpidinfo> 239
E.5.3.4.1.2 Initial setup information <wpinfo> 239
E.5.3.4.1.3 PMCS data 239
E.5.3.4.2 PMCS work package <pmcswp> 241
E.5.3.4.2.1 Work package identification information <wpidinfo> 241
E.5.3.4.2.2 Initial setup information <wpinfo> 241
E.5.3.4.2.3 PMCS procedures 241
E.5.3.4.2.3.1 PMCS data preparation <pmcstable> 241
E.5.3.4.2.4 Mandatory replacement parts <mrplpart> 243
E.5.3.4.3 Preventive Maintenance Checklist (PMC) (operator only) 244
E.5.3.5 Maintenance work packages (Not required for aircraft PM and PMS manuals only) <maintwp> 244
E.5.3.5.1 Work package identification information <wpidinfo> 245
E.5.3.5.2 Initial setup information <wpinfo> 245
E.5.3.5.3 Maintenance tasks <maintsk> 245
E.5.3.5.3.1 Maintenance task requirements 246
E.5.3.5.3.2 Assembly and preparation for use (aviation only) <prepforuse> 247
E.5.3.5.3.3 Servicing <service> 248
E.5.3.5.3.4 Ground handling <groundtsk> 248

Source: https://assist.dla.mil -- Downloaded: 2016-12-09T23:32Z
Check the source to verify that this is the current version before use.

CONTENTS

PARAGRAPH PAGE

E.5.3.5.3.5 Inspection of installed items <inspinstitm> 248
E.5.3.5.3.6 Removal <remove> 249
E.5.3.5.3.7 Disassembly <disassem> 249
E.5.3.5.3.8 Cleaning <clean> 249
E.5.3.5.3.9 Inspection-acceptance and rejection criteria <acptrejinsp> 250
E.5.3.5.3.10 Nondestructive Testing Inspection (NDTI) <ndti> 250
E.5.3.5.3.11 Repair or replacement <repair-rplc> 250
E.5.3.5.3.12 Alignment <align> 250
E.5.3.5.3.13 Painting <paint> 251
E.5.3.5.3.14 Lubrication <lube> 251
E.5.3.5.3.15 Assembly <assem> 251
E.5.3.5.3.16 Test and inspection <test-inspect> 251
E.5.3.5.3.16.1 Inspection and test of conventional and chemical ammunition or components containing radioactive materials (Field, Below Depot Sustainment, and ASB only) <test-inspect> 252
E.5.3.5.3.16.2 Pre-embarkation inspection of material in units alerted for overseas movement <test-inspect> 253
E.5.3.5.3.17 Installation <install> 253
E.5.3.5.3.18 Adjustment <adjust> 253
E.5.3.5.3.19 Calibration <calibration> 253
E.5.3.5.3.20 Radio interference suppression <ris> 254
E.5.3.5.3.21 Placing in service <pis> 254
E.5.3.5.3.22 Testing <test-pass> 254
E.5.3.5.3.23 Preservation, packaging, and marking (DMWR/NMWR only) <ppm> 255
E.5.3.5.3.24 Overhaul and retirement schedule (aircraft only) <orsch> 257
E.5.3.5.3.25 Preparation for storage or shipment <pss> 258
E.5.3.5.3.26 Classification of defects <ammo.defect> 258
E.5.3.5.3.27 Handling ammunition <ammo.handling> 258
E.5.3.5.3.28 Ammunition markings <ammo.markings> 259
E.5.3.5.3.29 Procedures needed to activate ammunition, mine, etc. <arm> 259
E.5.3.5.3.30 Additional maintenance task <other.maintsk> 259
E.5.3.5.3.31 Follow-on maintenance task <followon.maintsk> 259
E.5.3.6 General maintenance work package <maintwp> 259
E.5.3.6.1 Work package identification information <wpidinfo> 259
E.5.3.6.2 Initial setup information <wpinfo> 259
E.5.3.6.3 Maintenance tasks <maintsk> 259
E.5.3.7 Lubrication instructions work package <lubewp> 260
E.5.3.7.1 Work package identification information <wpidinfo> 260
E.5.3.7.2 Initial setup information <wpinfo> 260
E.5.3.7.3 Lubrication instructions 260
E.5.3.7.4 Lubrication charts 260
E.5.3.8 DMWR/NMWR specific maintenance work packages 260
E.5.3.8.1 Facilities work package (DMWR/NMWR only) <facilwp> 260
E.5.3.8.2 Overhaul inspection procedures (OIP) work package (DMWRs/NMWRs only) <oipwp> 261

Source: https://assist.dla.mil -- Downloaded: 2016-12-09T23:32Z
Check the source to verify that this is the current version before use.

CONTENTS

PARAGRAPH PAGE

E.5.3.8.2.1 Work package identification information <wpidinfo> 261
E.5.3.8.2.2 Initial setup information <wpinfo> 261
E.5.3.8.2.3 Overhaul Inspection Procedures (OIP) 261
E.5.3.8.3 Depot mobilization requirements work package (DMWR/NMWR only) <mobilwp> 261
E.5.3.8.3.1 Work package identification information <wpidinfo> 261
E.5.3.8.3.2 Initial setup information <wpinfo> 261
E.5.3.8.3.3 Introduction for depot mobilization requirements work package <intro> 261
E.5.3.8.3.4 Mobilization requirements <mobilreq> 262
E.5.3.8.4 QA requirements work package (DMWR/NMWR only) <qawp> 262
E.5.3.8.4.1 Work package identification information <wpidinfo> 262
E.5.3.8.4.2 Initial setup information <wpinfo> 262
E.5.3.8.4.3 Statement of responsibility <responsibility> 262
E.5.3.8.4.4 Definitions <definitions> 262
E.5.3.8.4.5 Special requirements for inspection tools and equipment <specialreq> 262
E.5.3.8.4.6 Certification requirements <certreq> 262
E.5.3.8.4.7 Quality program <quality-program> 262
E.5.3.8.4.8 In-process inspections <inprocess> 263
E.5.3.8.4.9 Acceptance inspections <acceptance> 263
E.5.3.8.4.10 First article inspection <first> 263
E.5.3.9 Illustrated list of manufactured items work package (Field level or above only) <manuwp> 263
E.5.3.9.1 Illustrated list of manufactured items introduction work package <intro> 263
E.5.3.9.1.1 Work package identification information <wpidinfo> 263
E.5.3.9.1.2 Initial setup information <wpinfo> 263
E.5.3.9.1.3 Introduction for illustrated list of manufactured items work package <intro> 263
E.5.3.9.1.4 Index of manufactured items <manuindx> 264
E.5.3.9.2 Manufacturing procedures work package <manfcprocwp> 264
E.5.3.9.2.1 Work package identification information <wpidinfo> 264
E.5.3.9.2.2 Initial setup information <wpinfo> 264
E.5.3.9.2.3 Illustrations of manufactured items <graphic> 264
E.5.3.10 Torque limits work package (Field level or above only) <torquewp> 265
E.5.3.10.1 Work package identification information <wpidinfo> 265
E.5.3.10.2 Initial setup information <wpinfo> 265
E.5.3.10.3 Introduction <intro> 265
E.5.3.10.4 Torque instructions <torqueval> 265
E.5.3.11 Wiring diagrams work package (Field level or above only) <wiringwp> 265
E.5.3.11.1 Work package identification information <wpidinfo> 265
E.5.3.11.2 Initial setup information <wpinfo> 265
E.5.3.11.3 Introduction <intro> 265
E.5.3.11.4 Wire identification <wireid> 265
E.5.3.11.5 Abbreviations <abbrev> 265
E.5.3.11.6 Wiring diagrams <wiringdiag> 266
E.5.3.12 Aircraft specific maintenance work packages 266

Source: https://assist.dla.mil -- Downloaded: 2016-12-09T23:32Z
Check the source to verify that this is the current version before use.

CONTENTS

PARAGRAPH PAGE

E.5.3.12.1 Preventive maintenance inspections work package (aircraft only) <pmiwp> 266
E.5.3.12.1.1 Work package identification information <wpidinfo> 266
E.5.3.12.1.2 Initial setup information <wpinfo> 266
E.5.3.12.1.3 General information and introduction <geninfo> 266
E.5.3.12.1.4 Standards of serviceability 266
E.5.3.12.1.5 Special inspections 266
E.5.3.12.2 Aircraft inventory master guide work package (aircraft only) <inventorywp> 267
E.5.3.12.2.1 Work package identification information <wpidinfo> 267
E.5.3.12.2.2 Initial setup information <wpinfo> 267
E.5.3.12.2.3 Introduction <intro> 267
E.5.3.12.2.4 Security <security> 267
E.5.3.12.2.5 Inventoriable items <inventoriable> 267
E.5.3.12.2.6 Periods of inventory <prdinv> 268
E.5.3.12.3 Storage of aircraft work package (aircraft only) <storagewp> 268
E.5.3.12.3.1 Work package identification information <wpidinfo> 268
E.5.3.12.3.2 Initial setup information <wpinfo> 268
E.5.3.12.3.3 General information for storage of aircraft work package <geninfo> 268
E.5.3.12.3.4 Flyable storage <flyable>, short term storage <short>, and intermediate storage <intermediate> 269
E.5.3.12.4 Weighing and loading work package (AMC only) <wtloadwp> 269
E.5.3.12.4.1 Work package identification information <wpidinfo> 269
E.5.3.12.4.2 Initial setup information <wpinfo> 269
E.5.3.12.4.3 General information <geninfo> 269
E.5.3.12.4.4 Weighing information <formchart> 269
E.5.3.12.4.5 Loading information <weightinst> 270
E.5.3.13 Auxiliary equipment maintenance work package <auxeqpwp> 270
E.5.3.13.1 Work package identification information <wpidinfo> 270
E.5.3.13.2 Initial setup information <wpinfo> 270
E.5.3.13.3 Auxiliary equipment procedures <maintsk>/<proc> 270
E.5.3.14 Ammunition specific work package 270
E.5.3.14.1 Ammunition maintenance work package <ammowp> 270
E.5.3.14.1.1 Work package identification information <wpidinfo> 270
E.5.3.14.1.2 Initial setup information <wpinfo> 270
E.5.3.14.1.3 Care and handling <ammo.handling> 270
E.5.3.14.1.4 Defective <ammo.defect> 270
E.5.3.14.1.5 Cleaning and painting <service> 270
E.5.3.14.2 Ammunition marking information work package <ammo.markingwp> 271
E.5.3.14.3 Foreign ammunition (NATO) work package <natowp> 271
E.5.3.15 Preventive maintenance services inspection work packages (aircraft preventive maintenance services only) <pms-inspecwp> 271
E.5.3.15.1 Work package identification information <wpidinfo> 271
E.5.3.15.2 Initial setup information <wpinfo> 271
E.5.3.15.3 Actuation warning 271

Source: https://assist.dla.mil -- Downloaded: 2016-12-09T23:32Z
Check the source to verify that this is the current version before use.

CONTENTS

PARAGRAPH PAGE

E.5.3.15.4 Mandatory safety-of-flight inspection items 272
E.5.3.15.5 Area diagram 272
E.5.3.15.6 Standard checklist statements 272
E.5.3.16 Phased maintenance inspection work package (aircraft phased maintenance checklist only) <pmi-cklistwp> 272
E.5.3.16.1 Work package identification information <wpidinfo> 272
E.5.3.16.2 Initial setup information <wpinfo> 272
E.5.3.16.3 Inspection area diagrams <figure> 272
E.5.3.16.4 Phased maintenance checklist 272
E.5.3.16.5 DELETED 273
E.5.3.16.6 DELETED 273
E.5.3.16.7 DELETED 273

E.6 NOTES 273

F REPAIR PARTS AND SPECIAL TOOLS LIST (RPSTL) 295

F.1 SCOPE 295
F.1.1 Scope 295

F.2 APPLICABLE DOCUMENTS 295

F.3 DEFINITIONS 295

F.4 GENERAL REQUIREMENTS 295
F.4.1 General 295
F.4.2 Preparation of digital data for electronic delivery 295
F.4.3 Use of the DTD/XSLs 295
F.4.4 Content structure and format 296
F.4.5 Style and format 296
F.4.6 Work package development 296
F.4.7 Selective application and tailoring 296

F.5 DETAILED REQUIREMENTS 296
F.5.1 General 296
F.5.2 Parts information development 296
F.5.3 Preparation of RPSTLs 296
F.5.3.1 Separate RPSTL TM 296
F.5.3.2 Parts information chapter <pim> 296
F.5.3.3 RPSTL work packages requirements 297
F.5.3.3.1 RPSTL work packages <pim> included in a maintenance TM 297
F.5.3.3.2 RPSTL work packages included in a DMWR/NMWR 297
F.5.3.3.2.1 Depot repair parts 297
F.5.3.4 Repair parts list, special tools, and kits work package layout 298
F.5.3.5 Introduction work package <introwp> (Ground Systems) 298
F.5.3.5.1 Work package identification information <wpidinfo> 298

Source: https://assist.dla.mil -- Downloaded: 2016-12-09T23:32Z
Check the source to verify that this is the current version before use.

CONTENTS

PARAGRAPH PAGE

F.5.3.5.2 Initial setup information....298
F.5.3.5.3 Introduction <intro>....298
F.5.3.5.4 Indexed RPSTL illustration and legend <figure>....306
F.5.3.5A Introduction Work Package <introwp> (Aviation Systems)....306
F.5.3.5.1A Work Package Identification Information <wpidinfo>....306
F.5.3.5.2A Initial Setup Information....306
F.5.3.5.3A Introduction <intro>....306
F.5.3.5.4A Indexed RPSTL illustration and legend <figure>....314
F.5.3.6 Repair parts list work package <plwp>....314
F.5.3.6.1 Work package identification information <wpidinfo>....314
F.5.3.6.2 Initial setup information....314
F.5.3.6.3 Repair parts list <pi.category>....314
F.5.3.6.3.1 Repair parts figure title <title>....314
F.5.3.6.3.2 Repair part item <pi.item>....314
F.5.3.6.3.2.1 Item number column <callout>....314
F.5.3.6.3.2.2 SMR code column <smr>....315
F.5.3.6.3.2.3 NSN column <nsn>....315
F.5.3.6.3.2.4 Commercial and Government Entity Code (CAGEC) <cageno> column....315
F.5.3.6.3.2.5 Part number <partno> column....315
F.5.3.6.3.2.6 Description and UOC column....315
F.5.3.6.3.2.7 Quantity column <qty>....317
F.5.3.6.3.2.8 (MC) USMC Quantity per equipment column....317
F.5.3.6.3.2.9 Mandatory Replacement....317
F.5.3.6.3.2.10 Unit of Measure....317
F.5.3.6.3.2.11 Unit of Issue....317
F.5.3.6.3.2.12 Reference Designator....317
F.5.3.6.3.2.13 Next Higher Assembly....317
F.5.3.6.3.2.14 Parts Breakdown Reference....317
F.5.3.6.3.2.15 Other characteristics....317
F.5.3.6.4 Basic Issue Items (BII) (repair parts)....317
F.5.3.6.5 Expendable and durable items....317
F.5.3.7 Repair parts for special tools list work package <stl_partswp>....317
F.5.3.7.1 Work package identification information <wpidinfo>....317
F.5.3.7.2 Initial setup information....318
F.5.3.7.3 Special tools repair parts items list <pi.category>....318
F.5.3.7.3.1 Functional group header <fncgrp>....318
F.5.3.8 Kit parts list work package <kitswp>....318
F.5.3.8.1 Work package identification information <wpidinfo>....318
F.5.3.8.2 Initial setup information....318
F.5.3.8.3 Kits part items list <pi.category>....318
F.5.3.8.3.1 Functional group header <fncgrp>....318
F.5.3.8.3.2 Kit part item group <kititem>....318
F.5.3.8.3.3 Kits part item quantity <qty>....318
F.5.3.9 Bulk items work package <bulk_itemswp>....318
F.5.3.9.1 Work package identification information <wpidinfo>....318

Source: https://assist.dla.mil -- Downloaded: 2016-12-09T23:32Z
Check the source to verify that this is the current version before use.

CONTENTS

PARAGRAPH PAGE
F.5.3.9.2 Initial setup information 319
F.5.3.9.3 Bulk item <pi.item> 319
F.5.3.9.3.1 ITEM column <callout> 319
F.5.3.9.3.2 Functional group header <fncgrp> 319
F.5.3.10 Special tools list work package <stlwp> 319
F.5.3.10.1 Work package identification information <wpidinfo> 319
F.5.3.10.2 Initial setup information 319
F.5.3.10.3 Special tools list <pi.category> 319
F.5.3.10.3.1 Item number column 319
F.5.3.10.3.2 Functional group header <fncgrp> 319
F.5.3.10.3.3 D-coded items 319
F.5.3.10.3.4 Basis of Issue (BOI) <boi> 319
F.5.3.10.3.5 Quantity column 320
F.5.3.10.3.6 Components list <kititem> 320
F.5.3.11 Cross-reference index work packages 320
F.5.3.11.1 National stock number (NSN) index work package <nsnindxwp> 320
F.5.3.11.1.1 Work package identification information <wpidinfo> 320
F.5.3.11.1.2 Initial setup information 320
F.5.3.11.1.3 NSN index <nsnindx> 320
F.5.3.11.2 Part number index work package <pnindxwp> 320
F.5.3.11.2.1 Work package identification information <wpidinfo> 320
F.5.3.11.2.2 Initial setup information 320
F.5.3.11.2.3 Part number index <pnindx> 320
F.5.3.11.3 Reference designator index work package <refdesindxwp> 320
F.5.3.11.3.1 Work package identification information <wpidinfo> 321
F.5.3.11.3.2 Initial setup information 321
F.5.3.11.3.3 Reference designator index <refdesindx> 321
F.5.3.11.4 Bulk figure reference 321
F.5.3.11.5 Sets and kits 321
F.5.3.12 Illustrations 321
F.5.3.12.1 Arrangement of illustrations 321
F.5.3.12.2 Use of illustrations 321
F.5.3.12.3 Identical parts/item numbers 321
F.5.3.12.4 Identical assemblies 322

F.6 NOTES 322

G TECHNICAL MANUALS SUPPORTING INFORMATION 339

G.1 SCOPE 339
G.1.1 Scope ....339G.2 APPLIC

G.3 DEFINITIONS 339

G.4 GENERAL REQUIREMENTS 339
G.4.1 General 339
G.4.2 Maintenance level applicability 339

Source: https://assist.dla.mil -- Downloaded: 2016-12-09T23:32Z
Check the source to verify that this is the current version before use.

CONTENTS

PARAGRAPH PAGE

G.4.3 Preparation of digital data for electronic delivery 339
G.4.4 Use of the DTD/XSLs....339
G.4.5 Content structure and format 340
G.4.6 Style and format....340
G.4.7 Work package development....340
G.4.8 Selective application and tailoring....340

G.5 DETAILED REQUIREMENTS....340
G.5.1 Preparation of supporting information....340
G.5.2 References work package <refwp>....340
G.5.2.1 Work package identification information <wpidinfo> 340
G.5.2.2 Initial setup information....340
G.5.2.3 Scope <scope> 340
G.5.2.4 Publication list <publist> 340
G.5.3 Maintenance allocation chart (MAC) (Field level only)....340
G.5.3.1 DELETED....340
G.5.3.1.1 DELETED....340
G.5.3.1.2 DELETED....341
G.5.3.1.3 DELETED....341
G.5.3.2 DELETED....341
G.5.3.2.1 DELETED....341
G.5.3.2.2 DELETED....341
G.5.3.2.3 DELETED....341
G.5.3.3 Introduction for two-level maintenance format MAC work package <macintrowp> 341
G.5.3.3.1 Work package identification information <wpidinfo> 341
G.5.3.3.2 Initial setup information....341
G.5.3.3.3 Introduction <intro>....341
G.5.3.3A Introduction for two-level aviation maintenance format MAC work package <macintrowp>....345
G.5.3.3A.1 Work package identification information <wpidinfo> 345
G.5.3.3A.2 Initial setup information....346
G.5.3.3A.3 Introduction <intro>....346
G.5.3.4 MAC work package <macwp> 352
G.5.3.4.1 Work package identification information <wpidinfo> 352
G.5.3.4.2 Initial setup information....352
G.5.3.4.3 MAC entries....352
G.5.3.4.4 MAC format....353
G.5.3.5 Tools and test equipment requirements <tereqtab> 354
G.5.3.6 Remarks <remarktab>....354
G.5.4 Components of end item (COEI) and basic issue items (BII) lists work package (operator only) <coeibiiwp> 354
G.5.4.1 Work package identification information <wpidinfo> 354
G.5.4.2 Initial setup information....354
G.5.4.3 Introduction for COEI and BII lists work package <intro>....354
G.5.4.4 COEI list <coei> 356

Source: https://assist.dla.mil -- Downloaded: 2016-12-09T23:32Z
Check the source to verify that this is the current version before use.

CONTENTS

PARAGRAPH PAGE

G.5.4.4.1 List <coeitab> 356
G.5.4.5 BII list <bii>....356
G.5.5 AAL work package (operator only) <aalwp>....356
G.5.5.1 Work package identification information <wpidinfo> 356
G.5.5.2 Initial setup information....356
G.5.5.3 Introduction <intro>....356
G.5.5.4 AAL list <aal> 357
G.5.6 Expendable and durable items list work package <explistwp>....357
G.5.6.1 Work package identification information <wpidinfo> 357
G.5.6.2 Initial setup information....357
G.5.6.3 Introduction for expendable and durable items list work package <intro> ...358
G.5.6.4 Expendable and durable items list <explist> 358
G.5.7 Tool identification list work package (Field level or above only) <toolidwp>....359
G.5.7.1 Work package identification information <wpidinfo> 359
G.5.7.2 Initial setup information....359
G.5.7.3 Introduction for tool identification list work package <intro> 359
G.5.7.4 Tool identification list <toolidlist> 360
G.5.8 Mandatory replacement parts work package (Field level or above only) <mrplwp>....360
G.5.8.1 Work package identification information <wpidinfo> 360
G.5.8.2 Initial setup information....360
G.5.8.3 Introduction for mandatory replacement parts work package <intro> 360
G.5.8.4 Mandatory replacement parts list <mprl>....360
G.5.9 Critical safety items (CSI) and flight safety critical aircraft parts (FSCAP) work package <csi.fscap.wp> 360
G.5.9.1 Work package identification information <wpidinfo> 360
G.5.9.2 Initial setup information....360
G.5.9.3 Critical safety items (CSI) <csi> 361
G.5.9.4 Flight safety critical aircraft parts (FSCAP) (aviation only) <fscap>....361
G.5.10 Support items work package <supitemwp>....361
G.5.10.1 Work package identification information <wpidinfo> 361
G.5.10.2 Initial setup information....361
G.5.10.3 Introduction <intro>....361
G.5.10.4 Support items lists....361
G.5.11 Additional work packages <genwp> 361

G.6 NOTES 361

H. DESTRUCTION OF ARMY MATERIEL TO PREVENT ENEMY USE....383

H.1 SCOPE 383

H.2 APPLICABLE DOCUMENTS....383

H.3 DEFINITIONS....383

Source: https://assist.dla.mil -- Downloaded: 2016-12-09T23:32Z
Check the source to verify that this is the current version before use.

CONTENTS

PARAGRAPH PAGE

H.4 GENERAL REQUIREMENTS....383
H.4.1 General....383
H.4.1.1 Types of manuals....383
H.4.1.1.1 Destruction manuals for a stock class (FSC)....383
H.4.1.1.2 Destruction manuals/work packages for a weapon system....383
H.4.2 Use of DTDs/XSLs....384
H.4.3 Content structure and format....384
H.4.4 Style and format....384
H.4.5 Selective application and tailoring....384
H.4.6 General destruction rules....384

H.5 DETAILED REQUIREMENTS....384
H.5.1 Destruction general information work package <destruct-ginfowp>....384
H.5.1.1 Work package identification information <wpidinfo>....384
H.5.1.2 Initial setup information....385
H.5.1.3 Scope of manual....385
H.5.1.4 Authority to destroy material....385
H.5.1.5 Reporting destruction....385
H.5.1.6 General destruction information....385
H.5.1.7 Degree of destruction....386
H.5.1.8 Essential components and spare parts....386
H.5.2 Destruction procedures work package <destruct-materialwp>....386
H.5.2.1 Work package identification information <wpidinfo>....386
H.5.2.2 Initial setup information....386
H.5.2.3 Parts list....386
H.5.2.4 Specific destruction procedures....386
H.5.2.5 Classified equipment and documents....387

H.6 NOTES....387

I. BATTLE DAMAGE ASSESSMENT AND REPAIR....389

I.1 SCOPE....389

I.2 APPLICABLE DOCUMENTS....389

I.3 DEFINITIONS....389

I.4 GENERAL REQUIREMENTS....389
I.4.1 Maintenance level....389
I.4.2 Use of DTDs/XSLs....389
I.4.3 Content structure and format....389
I.4.4 Style and format....389
I.4.5 Selective application and tailoring....390

Source: https://assist.dla.mil -- Downloaded: 2016-12-09T23:32Z
Check the source to verify that this is the current version before use.

CONTENTS

PARAGRAPH PAGE

I.5 DETAILED REQUIREMENT 390

I.5.1 Content 390
I.5.1.1 Operating procedures 390
I.5.2 BDAR information work packages 390
I.5.2.1 General information work package < > 390
I.5.2.1.1 Work package identification information <wpidinfo> 390
I.5.2.1.2 Initial setup information <wpinfo> 390
I.5.2.1.3 BDAR fixes statement 390
I.5.2.1.4 Introduction 391
I.5.2.1.5 Standards and practices 391
I.5.2.1.6 Tasks and responsibilities 391
I.5.2.1.7 Combat threats 392
I.5.2.2 Battle damage assessment work packages 392
I.5.2.2.1 Work package identification information <wpidinfo> 392
I.5.2.2.2 Initial setup information <wpinfo> 392
I.5.2.2.3 BDAR fixes statement 392
I.5.2.2.4 Introduction 392
I.5.2.2.5 General fault assessment tables 393
I.5.2.3 Repair work packages 393
I.5.2.3.1 Work package identification information <wpidinfo> 393
I.5.2.3.2 Initial setup information <wpinfo> 393
I.5.2.3.3 BDAR fixes statement 393
I.5.2.3.4 Introduction 393
I.5.2.3.5 Repair procedure 394
I.5.2.4 References work package 394
I.5.2.5 Special or fabricated tools work package 395
I.5.2.5.1 Work package identification information <wpidinfo> 395
I.5.2.5.2 Initial setup information <wpinfo> 395
I.5.2.5.3 BDAR fixes statement 395
I.5.2.5.4 Content and format 395
I.5.2.6 Expendable and durable items work package 395
I.5.2.7 Substutute material/parts work package 395
I.5.2.7.1 Work package identification information <wpidinfo> 395
I.5.2.7.2 Initial setup information <wpinfo> 395
I.5.2.7.3 BDAR fixes statement 395
I.5.2.7.4 Content 395

I.6 NOTES 395

Source: https://assist.dla.mil -- Downloaded: 2016-12-09T23:32Z
Check the source to verify that this is the current version before use.

CONTENTS

FIGURE PAGE

Figure 1. Example of a maintenance work package. 62
Figure 2. List of approved safety warning icons. 64
Figure 3. List of approved hazardous materials warning icons 67
Figure 4. Example of a chapter title page. 69
Figure 5. Example of a work package title block. 70
Figure 6. Example of a foldout page. 71
Figure 7. Example of a page with security classification markings. 72
Figure 8. Example of emergency page markings. 73
Figure 9. Example of a change transmittal page....74
Figure 10. Example of a TM front cover. 75
Figure 11. Example of a phased maintenance TM front cover....77
Figure 12. Example of a DMWR front cover. 78
Figure 13. Example of a DMWR cover for a DMWR with Overhaul Standards....79
Figure 14. Example of a NMWR Cover. 80
Figure 15. Example of a list of effective pages for a new publication. 81
Figure 16. Example of a list of effective pages for a manual with changes. 82
Figure 17. Example of a list of effective pages for a revised manual. 83
Figure 18. Example of a list of effective pages for a multi-volume manual. 84
Figure 19. Example of a title block page. 85
Figure 20. Example of a title block page with warning data for phased maintenance inspection and preventive maintenance services. 87
Figure 21. Example of table of contents. 88
Figure 22. Example of RPSTL table of contents. 89
Figure 23. Example of an alphabetical index. 90
Figure 24. Example of an authentication page. 91
Figure 25. Example of front cover for TM with national overhaul standards 92
Figure 26. Example of transmittal page for change to support Army Maintenance Transformation 93
Figure B-1. Example of a station diagram. 191
Figure C-1. Example of controls and indicators. 202
Figure D-1. Example of a cover sheet for preshop analysis checklist. 219
Figure D-2. Example of a preshop analysis checklist....220
Figure D-3. Example of a component checklist. 221
Figure D-4. Example of content for an operational checkout procedure. 222
Figure D-5. Example of content for a troubleshooting procedure (Method A). 223
Figure D-6. Example of content for a troubleshooting procedure (Method B). 224
Figure D-7. Example of content for a troubleshooting procedure (Method C). 225
Figure D-8. Example of content for a combination testing and troubleshooting procedure....226
Figure E-1. Example of checking unpacked equipment table. 274
Figure E-2. Example of a PMCS table. 276
Figure E-3. Example of a PMCS mandatory replacement parts list. 277
Figure E-4. Example of tabular and narrative reliability, availability, and maintainability data. 278
Figure E-5. Example of an OIP table....279

Source: https://assist.dla.mil -- Downloaded: 2016-12-09T23:32Z
Check the source to verify that this is the current version before use.

CONTENTS

FIGURE PAGE

Figure E-6. Example of a classification of material defect table.....280
Figure E-7. Example of an overhaul and retirement schedules.....281
Figure E-8. Example of a lubrication chart. 282
Figure E-9. Example of depot mobilization requirements.....283
Figure E-10. Example of an illustrated list of manufactured items.....284
Figure E-11. Example of torque limits data.....285
Figure E-12. DELETED 286
Figure E-13. Example of two chart diagram. 287
Figure E-14. DELETED 288
Figure E-15. Example of an area diagram for PMD.....289
Figure E-15A. Example of an area diagram for PMS 290
Figure E-16. Example of an inspection area diagram.....291
Figure E-17. Example of inspection access provisions. 292
Figure F-1. RPSTL page layout scenarios.....323
Figure F-2. Example of an introduction work package. 324
Figure F-3. Example of an Indexed RPSTL Illustration and Legend.....325
Figure F-4. Example of a repair parts list illustration.....326
Figure F-5. Example of a repair parts list work package.....328
Figure F-6. Example of indentions (next higher assembly). 329
Figure F-7. Example of kits breakdown option 1.....330
Figure F-8. Example of kits breakdown option 2.....331
Figure F-9. Example of a bulk material list.....332
Figure F-10. Example of a special tools list work package.....333
Figure F-11. Example of a national stock number index work package. 334
Figure F-12. Example of a part number index work package. 335
Figure F-13. Example of a reference designator index work package. 336
Figure F-14. Example of a multiservice RPSTL 337
Figure G-1. Example of references.....362
Figure G-2. DELETED.....363
Figure G-3. DELETED.....363
Figure G-4. Example of Standard 2 Level Maintenance MAC Introduction. 365
Figure G-4A. Example of Aviation 2 level MAC introduction.....365
Figure G-5. DELETED.....366
Figure G-6. DELETED.....366
Figure G-7. Example of standard two-level MAC. 368
Figure G-7A. Example of aviation 2 level MAC 368
Figure G-8. Example of a standard two-level MAC tools and test equipment and remarks tables. 369
Figure G-9. Example of aviation MAC tools and test equipment and remarks tables. 371
Figure G-10. Example of COEI lists (Method A). 371
Figure G-11. Example of COEI lists (Method B).....374
Figure G-12. Example of an additional authorization list. 377
Figure G-13. Example of a expendable and durable items list.....378
Figure G-14. Example of a tool identification list.....379
Figure G-15. Example of a mandatory replacement parts list.....380

Source: https://assist.dla.mil -- Downloaded: 2016-12-09T23:32Z
Check the source to verify that this is the current version before use.

CONTENTS

FIGURE PAGE

Figure G-16. Example of a flight safety critical aircraft parts table. 381
Figure I-1. Example of BDAR geninfo work package 396
Figure I-2. Example of assessment flowchart diagram 397
Figure I-3. Example of assessment table 398
Figure I-4. Example of substitute materials/parts 399
Figure I-5. Example of substitute lubricants and hydraulic fluids.....400
Figure I-6. Example of substitute fuels.....401

Source: https://assist.dla.mil -- Downloaded: 2016-12-09T23:32Z
Check the source to verify that this is the current version before use.

CONTENTS

TABLE PAGE

TABLE I. Manual styles and trim sizes. 24
TABLE II. Foldout maximum page sizes (in inches). 25
TABLE A-I. Publications Type and Title with Associated Context Matrix Table 95
TABLE A-II. TM Requirements Matrix for -10, -13, and -14 manuals 101
TABLE A-III. TM Requirements Matrix for -40 manuals. 109
TABLE A-IV. TM Requirements Matrix for -23 and -24 manuals 115
TABLE A-V. TM Requirements Matrix for aviation -23 and -24 TMs. 121
TABLE A-VI. TM Requirements Matrix for RPSTLs. 127
TABLE A-VII. Requirements Matrix for DMWR/NMWR 129
TABLE A-VIII. Requirements Matrix for DMWR/NMW w/overhaul standards. 135
TABLE A-IX. TM Requirements Matrix for Aircraft troubleshooting manual. 141
TABLE A-X. TM Requirements Matrix for Aircraft PMD/PMS manuals. 143
TABLE A-XI. TM Requirements Matrix for Aircraft PM manuals. 145
TABLE A-XII. TM Requirements Matrix for -10, -13, and -14 ammuntion TMs. 147
TABLE A-XIII. TM Requirements Matrix for -40 ammuntion TMs. 153
TABLE A-XIV. TM Requirements Matrix for -23 and -24 ammuntion TMs. 159
TABLE A-XV. TM Requirements Matrix for destruction to prevent enemy use TMs 165
TABLE A-XVI. Requirements Matrix for BDAR TM 167

Source: https://assist.dla.mil -- Downloaded: 2016-12-09T23:32Z
Check the source to verify that this is the current version before use.

1. SCOPE.

1.1 Scope. This standard establishes the technical content, style and format requirements for all technical manuals (TMs) for major weapon systems, and their related systems, subsystems, equipment, weapons replacement assemblies (WRAs), and shop replacement assemblies (SRAs). The requirements are applicable for all maintenance levels through overhaul (depot) including Depot Maintenance Work Requirements (DMWRs) and National Maintenance Work Requirements (NMWRs). The requirements can be used to develop TMs in paper, paged-based manuals.

1.2 Paragraphs with limited applicability. This standard contains paragraphs and specific requirements which are not applicable to all Services. Such paragraphs or requirements are prefixed to indicate the Services to which they pertain: (A) Army; (N) Navy; (MC) Marine Corps; and (F) Air Force. Portions not prefixed are applicable to all services.

1.3 Use of the technical content. In addition to using the technical content requirements provided herein for the development of TMs, the technical information developed in accordance with this standard and MIL-STD-3008 (TM) can be used to provide the necessary input to other external systems that are designed to collect and report operations, maintenance, historical and parts requisition data required for efficient management and support of aviation and non-aviation weapon systems and their related systems, equipment, and components/modules.

2. APPLICABLE DOCUMENTS.

2.1 General. The documents listed in this section are specified in sections 3, 4, and 5 of this standard. This section does not include documents cited in other sections of this multipart standard or recommended for additional information or as examples. While every effort has been made to ensure the completeness of this list, document users are cautioned that they must meet all specified requirements documents cited in sections 3, 4, and 5 of this standard, whether or not they are listed.

2.2 Government documents.

2.2.1 Specifications, standards and handbooks. The following specifications, standards, and handbooks form a part of this document to the extent specified herein. Unless otherwise specified, the issues of these documents are those cited in the solicitation or contract.

SPECIFICATIONS

DEPARTMENT OF DEFENSE

MIL-DTL-24784	—	Manuals, Technical: General Acquisition And Development Requirements
MIL-PRF-28000	—	Digital Representation for Communication of Product Data: IGES Application Subsets and IGES Application Protocols
MIL-PRF-28002	—	Raster Graphics Representation in Binary Format, Requirements for

Source: https://assist.dla.mil -- Downloaded: 2016-12-09T23:32Z
Check the source to verify that this is the current version before use.

MIL-PRF-28003 — Digital Representation for Communication of Illustration Data: CGM Application Profile

STANDARDS

DEPARTMENT OF DEFENSE

MIL-STD-882 — System Safety

MIL-STD-1309 — Definition of Terms for Testing, Measurement, and Diagnostics

MIL-STD-1686 — Electrostatic Discharge Control Program for Protection of Electrical and Electronic Parts, Assemblies, and Equipment (Excluding Electrically Initiated Explosive Devices) (Metric)

MIL-STD-2361 — Digital Publications Development

HANDBOOKS

DEPARTMENT OF DEFENSE

MIL-HDBK-113 — Guide for the Selection of Lubricants, Functional Fluids, Preservatives and Specialty Products for use in Ground Equipment Systems

MIL-HDBK-263 — Electrostatic Discharge Control Handbook for Protection of Electrical and Electronic Parts, Assemblies and Equipment, Excluding Electrically Initiated Explosive Devices (Metric)

MIL-HDBK-275 — Guide for Selection of Lubricants, Fluids, and Compounds for Use in Flight Vehicles and Components

MIL-HDBK-1222 — Guide to the General Style and Format of U.S. Army Work Package Technical Manuals

MIL-HDBK-9660 — Handbook for DoD-Produced CD-ROM Products

(Copies of these documents are available online at http://assist.daps.dla.mil/quicksearch/ or from the Document Automation and Production Service, Building 4/D, 700 Robbins Avenue, Philadelphia, PA 19111-5094.)

H4/H8 — Cataloging Handbook: Commercial and Government Entity Code (United States and Canada) - Name to Code

H6 — Federal Supply Cataloging Handbook

(Copies of Handbooks H4/H8 and H6 are available from the Commander, Defense Logistics Services Center, Battle Creek, MI 49017-3084.)

Source: https://assist.dla.mil -- Downloaded: 2016-12-09T23:32Z
Check the source to verify that this is the current version before use.

2.2.2 Other Government documents and publications. The following other Government documents and publications form a part of this document to the extent specified herein. Unless specified otherwise, the issues are those cited in the solicitation or contract.

AR 25-30	—	The Army Publishing Program
AR 75-1	—	Malfunctions Involving Ammunition and Explosives (RCS CSGLD--1961(MI))
AR 95-1	—	Aviation Flight Regulations.
AR 385-64	—	U.S. Army Explosives Safety Program
CTA 50-909	—	Field and Garrison Furnishings and Equipment
CTA 50-970	—	Expendable/Durable Items (Except Medical, Class V, Repair Parts, and Heraldic Items)
DA PAM 25-30	—	Consolidated Army Publications and Forms Index
DA PAM 25-40	—	Army Publishing
DA PAM 385-63	—	Range Safety
DA PAM 385-64	—	Ammunition and Explosives Safety Standards
DA PAM 738-751	—	Functional Users Manual for The Army Maintenance Management System-Aviation (TAMMS-A)
DA PAM 750-8		The Army Maintenance Management System (TAMMS) Users Manual

(Application for copies should be addressed to APD, Distribution Operations Facility (APD-DOF), 1655 Woodson Road, St. Louis, MO 63114-6128.)

DOD 5200.1-R	—	DoD Information Security Program
DOD 5220.22-M	—	National Industrial Security Program Operating Manual
DOD 5230.24	—	Distribution Statements on Technical Documents
DOD 5400.7-R	—	DoD Freedom of Information Act Program

(Copies of DOD documents are available at http://www.dtic.mil/whs/directives/.)

FM 3-04.500	—	Army Aviation Maintenance
FM 4-25.11	—	First Aid
FM 5-250	—	Explosives and Demolitions
Joint Pub 1-02	—	Department of Defense Dictionary of Military and Associated Terms
SB 11-573	—	Painting and Preservation of Supplies Available for Field Use for Electronics Command Equipment

Source: https://assist.dla.mil -- Downloaded: 2016-12-09T23:32Z
Check the source to verify that this is the current version before use.

SB 742-1	—	Inspection of Supplies and Equipment Ammunition Surveillance Procedures.
TB 43-0118	—	Field Instructions for Painting and Preserving Electronics Command Equipment Including Camouflage Patterns Painting of Electronics Equipment Shelters.
TB 43-0209	—	Color, Marking and Camouflage Painting of Military Vehicles, Construction Equipment, and Materials Handling Equipment
TM 1-1500-204-23	—	Aviation Unit Maintenance (AVUM) and Aviation Intermediate Maintenance (AVIM) Manual for General Aircraft Maintenance (Consists of ten volumes)
TM 1-1500-328-23	—	Aeronautical Equipment Maintenance Management Policies and Procedures
TM 1-1500-335-23	—	Nondestructive Inspection Methods
TM 1-1500-344-23	—	Cleaning and Corrosion Control (4 volumes)
TM 43-0139	—	Painting Instructions for Army Materiel
TM 55-1500-342-23	—	Army Aviation Engineering Manual, Weight and Balance
TM 55-1500-345-23	—	Painting and Marking of Army Aircraft

(Copies of these publications are available from the APD, Distribution Operations Facility (APD-DOF), 1655 Woodson Road, St. Louis, MO 63114-6128.)

2.3 Non-Government publications. The following documents form a part of this document to the extent specified therein. Unless otherwise specified, the issues of these documents are those cited in the solicitation or contract.

AMERICAN NATIONAL STANDARDS INSTITUTE (ANSI)

ANSI Y32.10	—	Diagrams, Fluid Power, Graphic Symbols for
ISO 9000 Series	—	Quality

(Application for copies should be addressed to the American National Standards Institute Inc., 25 West 43rd Street, New York, NY 10036.)

AMERICAN SOCIETY OF MECHANICAL ENGINEERS

ASME-Y14.38	—	Abbreviations for Use on Drawings and in Text
ASME-Y14.100	—	Engineering Drawing Practices

(Application for copies should be addressed to the American Society of Mechanical Engineers, 3 Park Avenue, New York, NY 10016-5990.)

Source: https://assist.dla.mil -- Downloaded: 2016-12-09T23:32Z
Check the source to verify that this is the current version before use.

AMERICAN SOCIETY FOR TESTING AND MATERIALS (ASTM)

ASTM-F856	—	Standard Practice for Mechanical Symbols, Shipboard—Heating, Ventilation, and Air Conditioning (HVAC)

(Applications for copies should be addressed to the American Society for Testing Material, 100 Barr Harbor Drive, West Conshohocken, PA 19428-2959, (online: www.astm.org).)

INSTITUTE OF ELECTRICAL AND ELECTRONICS ENGINEERS (IEEE)

IEEE 91-1991	—	Graphic Symbols for Logic Functions
IEEE 260.1-2004	—	IEEE Standard Letter Symbols for Units of Measurement
IEEE 280-1985	—	Letter Symbols for Use in Electrical Science and Electrical Engineering
IEEE 315A-1986	—	Graphic Symbols for Electrical and Electronic Diagrams
IEEE 945-1984	—	IEEE Recommended Practice for Preferred Metric Units for Use in Electrical and Electronics, Science and Technology

(Application for copies should be addressed to the Institute of Electrical and Electronics Engineers, Inc., 345 East 47th Street, New York, NY 10017.)

2.4 Order of precedence. In the event of a conflict between the text of this document and the references cited herein, the text of this document takes precedence. Nothing in this document, however, supersedes applicable laws and regulations unless a specific exemption has been obtained.

3. DEFINITIONS.

3.1 Acronyms used in this standard. The acronyms used in this standard are defined as follows:

AAL	Additional Authorization List
AMC	Army Materiel Command/Aviation Maintenance Company
AMDF	Army Master Data File
ANSI	American National Standards Institute
Ao	Operational Availability
AOAP	Army Oil Analysis Program
APD	Army Publishing Directorate
AQL	Acceptable Quality Level
AR	Army Regulation
ASB	Aviation Support Battalion
ASRL	Army SGML Registry and Library

Source: https://assist.dla.mil -- Downloaded: 2016-12-09T23:32Z
Check the source to verify that this is the current version before use.

ATE	Automatic Test Equipment
BDAR	Battle Damage Assessment and Repair
BII	Basic Issue Items
BIT	Built in Test
BITE	Built in Test Equipment
BOI	Basis of Issue
CAGEC	Commercial and Government Entity Code
CALS	Continuous Acquisition Life Cycle Support
CD	Compact Disk
CD-ROM	Compact Disk Read Only Memory
CGM	Computer Graphics Metafile
COEI	Components of End Item
COMSEC	Communications Security
CPC	Corrosion Prevention and Control
CSI	Critical Safety Items
CTA	Common Table of Allowance
DMWR	Depot Maintenance Work Requirement
DOD	Department of Defense
DODAC	Department of Defense Ammunition Code
DTD	Document Type Definition
DX	Direct Exchange
ECM	Electronic Countermeasures
ECP	Engineering Change Proposal
EDS	Electronic Display System
EIC	End Item Code
EIR	Equipment Improvement Recommendation
EMP	Electromagnetic Pulse
ESD	Electrostatic Discharge
FAR	Federal Acquisition Regulations
FDEP	Final Draft Equipment Publication
FGC	Functional Group Code
FRC	Final Reproducible Copy
FSCAP	Flight Safety Critical Aircraft Parts
GL	Grade Level
GSE	Ground Support Equipment
HAP	Hazardous Air Pollutant

Source: https://assist.dla.mil -- Downloaded: 2016-12-09T23:32Z
Check the source to verify that this is the current version before use.

HCI	Hardness Critical Item
HCP	Hardness Critical Process
HR	Hand Receipt
IEC	International Electrotechnical Commission
IEEE	Institute of Electrical and Electronics Engineers
IETM	Interactive Electronic Technical Manual
IGES	Initial Graphics Exchange Specification
ISO	International Organization for Standardization
JTA	Joint Table of Allowances
JTCI	Joint Technical Committee for Information Technology
LAN	Local Area Network
LMI	Logistics Management Information
LOAP	List of Applicable Publications
LOGSA	Logistics Support Activity
LRU	Line Replacement Unit
MAC	Maintenance Allocation Chart
MEL	Maintenance Expenditure Limit
MOC	Maintenance Operational Checks
MOS	Military Occupational Specialty
MTBCM	Meantime Between Corrective Maintenance
MTBF	Meantime Between Failures
MTF	Maintenance Test Flight
MTOE	Modified Table of Organization and Equipment
MTTR	Mean Time to Repair
MUX	Multiplex
MWO	Modification Work Order
NATO	North Atlantic Treaty Organization
NBC	Nuclear, Biological, and Chemical
NDTI	Nondestructive Testing Inspection
NHA	Next Higher Assembly
NIIN	National Item Identification Number
NMWR	National Maintenance Work Requirement
NSN	National Stock Number
ODS	Ozone Depleting Substances
OGL	Overall Grade Level
OIP	Overhaul Inspection Procedure

Source: https://assist.dla.mil -- Downloaded: 2016-12-09T23:32Z
Check the source to verify that this is the current version before use.

OS	Output Specification
OSHA	Occupational Safety and Health Act
P/N	Part Number
PCB	Printed Circuit Boards
PI	Parts Information
PMA	Portable Maintenance Aid
PM	Phased Maintenance
PMAC	Preliminary Maintenance Allocation Chart
PMC	Preventive Maintenance Checklist
PMCS	Preventive Maintenance Checks and Services
PMI	Phased Maintenance Inspection
PMS	Preventive Maintenance Services
PSA	Preshop Analysis
QA	Quality Assurance
QTY	Quantity
RAM	Reliability, Availability, Maintainability
RCM	Reliability Centered Maintenance
RGL	Reading Grade Level
RMS	Reliability, Maintainability, and Supportability
RPSTL	Repair Parts and Special Tools List
SB	Supply Bulletin
SC	Supply Catalog
SGML	Standard Generalized Markup Language
SKO	Sets, Kits, and Outfits
SMR	Source, Maintenance, and Recoverability
SRA	Specialized Repair Activity
SRAs	Shop Replacement Assemblies
SRU	Shop Replacement Units
TAMMS	Total Army Maintenance Management System
TAMMS	Total Army Maintenance Management System Aviation
TASMG	Theater Aviation Sustainment Maintenance Group
TB	Technical Bulletin
TBO	Time Between Overhaul
TDA	Tables of Distribution and Allowances
TM	Technical Manual
TMDE	Test, Measurement, and Diagnostic Equipment

Source: https://assist.dla.mil -- Downloaded: 2016-12-09T23:32Z
Check the source to verify that this is the current version before use.

TOE	Table of Organization and Equipment
U/I	Unit of Issue
UOC	Usable On Code
URL	Uniform Resource Locator
UUT	Unit Under Test
WP	Work Package
WRAs	Weapons Replacement Assemblies
WTB	Warranty Technical Bulletin
XML	Extensible Markup Language
XSL	XML Stylesheet Language

3.2 Acquiring Activity. The DOD component, activity, or organization of a using military service, or that organization delegated by a using service, that is responsible for the selection and determination of requirements for TMs.

3.3 Additional Authorization List (AAL) items. Items are optional (discretionary), are not essential to operate the end item, and are not listed on engineering drawings. Items are not turned in with the end item.

3.4 Adjust. To maintain or regulate within prescribed limits, by bringing into proper position, or by setting the operating characteristics to specified parameters.

3.5 Align. To adjust specified variable elements of an item to bring about optimum or desired performance.

3.6 American National Standards Institute (ANSI). A private sector organization, which plans, develops, establishes, or coordinates standards, specifications, handbooks, or related documents.

3.7 Army Master Data File (AMDF). The files required to record, maintain, and distribute supply management data between and from Army commands to requiring activities.

3.8 Army Oil Analysis Program (AOAP). Effort to detect impending equipment component failure and determine lubricant condition through periodic analytical evaluation of oil samples.

3.9 Assembled item. An item source coded AO, AF, AH, AL, or AD that is not stocked as an assembly but is assembled from its constituent repair parts.

3.10 Assembly. Two or more parts or subassemblies joined together to perform a specific function and capable of disassembly (e.g., brake assembly, fan assembly, audio frequency amplifier). Note that the distinction between an assembly and subassembly is determined by the individual application. An assembly in one instance may be a subassembly in another where it forms a portion of an assembly.

3.11 Auxiliary equipment. Equipment, accessories, or devices which, when used with basic equipment, extend or increase its capability (e.g., Modified Table of Organization and Equipment (MTOE) items, etc.).

3.12 DELETED.

3.13 DELETED.

Source: https://assist.dla.mil -- Downloaded: 2016-12-09T23:32Z
Check the source to verify that this is the current version before use.

3.14 Basic Issue Items (BII). The minimum essential items not listed in the drawings, but required to place the equipment in operation, to operate it, and to perform emergency repairs. Although shipped separately packaged, basic issue items must be with the equipment during operation and whenever it is transferred between property accounts. BII may be packed with COMSEC equipment.

3.15 Basis of Issue (BOI). The quantity of an item (special tool) authorized for the end item density spread or for the unit level specified.

3.16 Block diagram. A modified schematic diagram in which each group of maintenance-significant components that together performs one or more functions is represented by a single symbol or block. The block or symbol representing the group of components shows simplified relevant input and output signals pertinent to the subject diagram.

3.17 Built-in Test Equipment (BITE). Any identifiable device that is a part of the supported end item and is used for testing that supported end item.

3.18 Bulk material. Material issued in bulk for manufacture or fabrication of support items (e.g., sheet metal, pipe tubing, bar stock, or gasket material); excludes expendable items.

3.19 Calibrate. To determine and cause corrections or adjustments to be made to instruments or test, measuring, and diagnostic equipment used in precision measurement. Consists of comparisons of two instruments, one of which is a certified standard of known accuracy, to detect and adjust any discrepancy in the accuracy of the instrument being compared.

3.20 Callout. Anything placed on an illustration to aid in identifying the objects being illustrated, such as index numbers, nomenclature, leader lines, and arrows.

3.21 Continuous Acquisition Life-cycle Support (CALS) raster. Compressed scanned raster images (CCITT, Group 4) in accordance with MIL-PRF-28002.

3.22 Commercial and Government Entity Code (CAGEC). A five character code assigned to commercial activities that manufacture or supply items used by the Federal Government and to Government activities that control design or are responsible for the development of certain specifications, standards, or drawings which control the design of Government items. CAGE Code assignments are listed in the H4/H8 CAGE Publications.

3.23 Complete repair. Maintenance capacity, capability, and authority to perform all the corrective maintenance tasks of the repair function in a use or user environment in order to restore serviceability to a failed item. Excludes the prescriptive maintenance functions, overhaul, and rebuild.

3.24 Component. A constituent part not normally considered capable of independent operation; a piece part.

3.25 Components of End Item (COEI). Items identified on the engineering drawing tree, which are physically separated and distinct from the end item.

3.26 Comprehensibility. The completeness with which a user in the target audience understands the information in the TM.

Source: https://assist.dla.mil -- Downloaded: 2016-12-09T23:32Z
Check the source to verify that this is the current version before use.

3.27 Continuous Acquisition Life-cycle Support (CALS). A DoD initiative to transition from paper-intensive, non-integrated weapon systems design, manufacturing, and support processes to a highly automated and integrated mode of operation. This transition will be facilitated by acquiring, managing, and using technical data in standardized digital form.

3.28 Computer Graphics Metafile (CGM). A standard digital graphic form for graphics preparation as defined by MIL-PRF-28003.

3.29 Continuous tone photographs or drawings. Continuous tone photographs or drawings have a continuous gradation of tonal values ranging from light (white) to dark (black), including gray. Lines or dots do not create these tonal values.

3.30 Corrosion Prevention and Control (CPC). Systematic maintenance steps/procedures taken to prevent or retard the gradual destruction and/or pitting of a metal surface or other materials, such as rubber and plastic, due to chemical attack.

3.31 Degradation. The reduction in systems/subsystems/components performance capability.

3.32 Department of Defense (DoD). The Office of the Secretary of Defense (OSD) (including all boards and councils), the Military Departments (Army, Navy, and Air Force), the Organization of the Joint Chiefs of Staff (OJCS), the Unified and Specified Commands, the National Security Agency (NSA), and the Defense Agencies.

3.33 Department of Defense Ammunition Code (DODAC). An eight character code developed to indicate interchangeability of ammunition and explosive items in Federal Supply Classification (FSC) Group 13. This eight-character code is divided into two parts. The two parts are separated by a hyphen. The first four digits represent the FSC; the letter and last three numerals represent the DoD Identification Code that is assigned to items that are interchangeable in function and use. The eight-character DoD ammunition code is used for such ammunition operations as worldwide stock status reporting and requisitioning when specific items are not required.

3.34 Depot-level maintenance. Maintenance that is beyond the capability of the field and below depot sustainment maintenance activities. Depot-level maintenance normally consists of overhaul, recondition, manufacture, repair, or modification and requires technical assistance beyond lower maintenance level capability.

3.35 Depot Maintenance Work Requirement (DMWR). A maintenance serviceability document for depot maintenance operations. The document prescribes the essential factors to ensure that an acceptable and cost-effective product is obtained.

3.36 Digital graphic form. A standard graphics form acceptable for graphics preparation under this standard. These forms include Computer Graphics Metafile (CGM), CALS raster, and Initial Graphics Exchange Specification (IGES).

3.37 DELETED.

3.38 Disassemble. The step-by-step taking apart (or breakdown) of a spare or functional group-coded item to the level of its least componency identified as maintenance-significant (i.e., assigned an SMR code for the category of maintenance under consideration).

3.39 Document instance. The instance is the actual document text and its accompanying SGML/XML tags conforming to the specifications and restrictions set forth in the DTD.

Source: https://assist.dla.mil -- Downloaded: 2016-12-09T23:32Z
Check the source to verify that this is the current version before use.

3.40 Document Type Definition (DTD). The definition of the markup rules for a given class of documents. A DTD or reference to one should be contained in any SGML/XML conforming document.

3.41 Effectivity. The act or process of identifying weapon systems or end-items and their hardware and software system and subsystems by their associated usable on code (UOC), serial number, model number, part number/CAGEC, NSN, end item code (EIC), software version or modification work order (MWO). Effectivity is included to signify that certain configuration (s) or modifications apply to a given weapon system/equipment.

3.42 Electronic Countermeasures (ECM). Electronic surveillance equipment for detecting and adverting threatening enemy weapons systems.

3.43 Electrostatic Discharge (ESD). Static electricity. A transfer of electrostatic charge between objects of different potentials caused by direct contact or induced by an electrostatic field. Devices such as integrated circuits and discrete devices (e.g., resistors, transistors, and other semiconductor devices) are susceptible to damage from electrostatic discharge.

3.44 End Item Code (EIC). A final combination of end products, component parts, or materials that is ready for its intended use (e.g., tank, mobile machine shop, aircraft, receiver, rifle, recorder).

3.45 Equipment. One or more units capable of performing specified functions.

3.46 Equipment Improvement Recommendation (EIR). Solicitation of suggestions from end item users/operators for means to improve the operation and effectiveness of equipment. The SF 368 is the instrument by which suggested improvements are forwarded to the cognizant agency.

3.47 Equipment nomenclature. The official name of the equipment as shown in AMDF.

3.48 Essential. Those systems/subsystems/components that are required for a designated mission or system operation.

3.49 Evacuation. A combat service support function which involves the movement of recovered material from a main supply route; maintenance collection material may be returned to the user, to the supply system for reissue, or to property disposal activities.

3.50 Expendable items. Items, other than repair parts that are consumed in use (e.g., paint, lubricants, wiping rags, tape, cleaning compounds, sandpaper).

3.51 Extensible Markup Language (XML). A subset of SGML. It enables generic SGML to be served, received, and processed on the Web in the way that is now possible with HTML. XML has been designed for ease of implementation and for interoperability with both SGML and HTML.

3.52 Field Maintenance. Field maintenance is on-system maintenance and is mainly replacement of defective parts and preventative maintenance. Field maintenance returns repaired equipment to the soldier. Some “off-system” maintenance can be done at field level if, based on task analysis, it is simple to complete or it is critical to mission readiness.

Source: https://assist.dla.mil -- Downloaded: 2016-12-09T23:32Z
Check the source to verify that this is the current version before use.

3.53 Final Reproducible Copy (FRC). The final document ready for reproduction and publication as an authenticated TM, including all necessary changes made as a result of validation/verification and acquisition activity conditions of acceptance or approval. The delivery media includes, but is not limited to, reproducible camera-ready copy, direct image copies, negatives, disks, tapes, etc., as specified. For Army, FRC equates to Final Draft Equipment Publication (FDEP).

3.54 Follow-on maintenance. Follow-on is a maintenance condition which must be accomplished sometime following the completion of a task to clean up or undo actions performed during the task.

3.55 Footer. One or more lines of standard text that appear at the bottom of each page (also called feet and running feet).

3.56 Functional diagram. A type of illustration in which symbols are connected by lines to show relationships among the symbols. The symbols may be rectangles or other shapes, standard electronic symbols representing components or functions, or pictorials representing equipment or components. Where appropriate, voltage readings are shown. The lines may represent procedures or processes, such as signal or logic flow, and physical items, such as wires. Functional diagram includes schematics, wiring and piping diagrams, logic diagrams, flow charts, and block diagrams.

3.57 Functional Group Code (FGC). A basic (usually two-position) group code assigned to identify major components, assemblies, and subassemblies to a functional system. Subordinate subfunctional groups/subassemblies are coded to relate back to the basic (top position) FGC in a sequential, Next Higher Assembly (NHA) relationship (i.e., top-down breakdown structure).

3.58 DELETED.

3.59 Grade Level (GL). Level of reading comprehensibility to which a document is written. The required reading grade level of a document is specified by the acquiring activity. For example, a level of about ninth grade may be required for materials of a technical nature to be included in maintenance manuals.

3.60 Graphic(s). Any type of presentation or representation, which gives a clear visual impression.

3.60A HAP-Free. HAP-free means a material that contains no more than 0.1 percent by mass of any individual HAP that is an OSHA-defined carcinogen as specified in 29 CFR 1910.1200(d)(4) and no more than 1.0 percent by mass for any other individual HAP, as demonstrated by a specification or standard, or a manufacturer's representation, such as in a material safety data sheet or product data sheet.

3.61 Hardness Critical Item (HCI). A support item that provides the equipment with special protection from electromagnetic pulse (EMP) damage during a nuclear attack.

3.62 Hardness Critical Process (HCP). A process affecting a mission critical item which could degrade system survivability in a nuclear, biological, or chemical hostile environment if hardness were not considered. Nuclear HCPs are processes, finishes, specifications, manufacturing techniques, and/or procedures which are hardness critical, and which, if changed, could degrade nuclear hardness.

Source: https://assist.dla.mil -- Downloaded: 2016-12-09T23:32Z
Check the source to verify that this is the current version before use.

3.63 Hardtime intervals. Hardtime maintenance is scheduled maintenance conducted at predetermined fixed intervals because of age, calendar, or usage such as operating time, flying hours, miles driven, or rounds fired.

3.64 Header. One or more lines of standard text that appear at the top of each page (also called heads and running heads).

3.65 Horizontal (Landscape) TM format. Positioning of technical manual so that page horizontal (width) dimensions are greater than vertical (height) dimensions.

3.66 Icon. Pictorial representation; visual image to give immediate recognition of a hazard or to provide essential information.

3.67 Illustration. A general term meaning graphic presentations of all types. Illustrations include pictorials, functional diagrams, and line graphs. This term is used synonymously with figure, graphic, drawing, diagram, and artwork.

3.68 Initial Graphics Exchange Specification (IGES). A standard digital graphic form for graphics preparation as defined by MIL-PRF-28000.

3.69 Inspect. To determine the serviceability of an item by comparing its physical, mechanical, and/or electrical characteristics with established standards through examination (e.g., by sight, sound, or feel).

3.70 Institute of Electrical and Electronics Engineers (IEEE). Membership organization that includes engineers, scientists and students in electronics and allied fields. Founded in 1963, it has over 300,000 members and is involved with setting standards for computers and communications.

3.71 International Organization for Standardization (ISO). Organization that sets international standards, founded in 1946 and headquartered in Geneva. It deals with all fields except electrical and electronics, which is governed by the older International Electrotechnical Commission (IEC), also in Geneva. With regard to information processing, ISO and IEC created JTCI, the Joint Technical Committee for Information Technology.

3.72 Interchangeability. Defined in this specification as above, the scope of classic interchangeability. The intent/purpose of this specification is to allow fully innovative fixes/repairs to the aircraft. This includes minor modifications that can be made to achieve interchangeability. Capable of being put or used in place of each other.

3.73 Landscape mode. To print an image sideways on the page so that the longest edge of the form corresponds to the horizontal axis.

3.74 Leak rate. The speed or rate of flow of accidental escape of fluid or gas from a system, which is caused by damage processes. The leak rate is influenced by such factors as the hole size, internal/external pressures, and fluid level.

3.75 Legend. A tabular listing and explanation of the numbers or symbols on a figure or an illustration.

3.76 Limited repair. Scope of corrective repair authorized to be performed by a level of maintenance lower than the level of authorized complete repair.

Source: https://assist.dla.mil -- Downloaded: 2016-12-09T23:32Z
Check the source to verify that this is the current version before use.

3.77 Line Replacement Unit (LRU). An item normally removed and replaced as a single unit to correct a deficiency or malfunction on a weapon system or end item of equipment.

3.78 List of Applicable Publications (LOAP). A separate listing of publications which are related to a specific piece of equipment, group of equipment, or system.

3.79 Logic diagram. Diagram comprised of a branching series of questions, resulting in a “yes” or “no” answer, leading to determination and resolution of problem.

3.80 Logistics Management Information (LMI). The selective application of scientific and engineering efforts undertaken during the acquisition process, as part of the systems engineering process, to assist in acquiring the required support; and providing the required support during the operational phrase at minimum cost.

3.81 Maintenance Allocation Chart (MAC). A list of equipment maintenance functions showing maintenance level. The MAC is arranged in functional group code sequence or in top-down, breakdown sequence in the logical order of disassembly following the RPSTL order of assembly/subassembly listings.

3.82 Maintenance level. The separation of maintenance activities or functions in the U.S. Army according to the required skills and available facilities.

3.83 Maintenance task. A series of related maintenance procedures with a definite beginning and end.

3.84 Maximum Time to Repair (MTTR). The total elapsed time (clock hours) for corrective maintenance divided by the total number of corrective maintenance actions during a given period of time.

3.85 Mean time between corrective maintenance (MTBCM). For a particular interval, the total functional life of a population of an item divided by the total number of failures within the population during the measurement interval. The definition holds for time, rounds, miles, events, or other measure of life units. (Used only when referring to depot level maintenance.)

3.86 Meantime between failures (MTBF). For a particular interval, the total functional life of a population of an item divided by the total number of failures within the population during the measurement interval. The definition holds for time, rounds, miles, events, or other measure of life units.

3.87 Modified table of organization and equipment (MTOE). A modified version of a TOE that prescribes the unit organization, personnel, and equipment needed to perform an assigned mission in a specific geographical or operational environment.

3.88 Modification work order (MWO). Detailed instructions (including text and graphics) for making changes/improvements to a particular system in order to bring the system up to date and/or to improve its overall efficiency.

3.89 Module. A subassembly that, in the area of electronic systems, may be removed and replaced without use of soldering equipment or special tools; a module may be encapsulated.

3.90 National Item Identification Number (NIIN). The last nine digits of the National/NATO stock number. The first two digits of the NIIN identify the country assigning the number and the remaining seven digits are a serially assigned number.

Source: https://assist.dla.mil -- Downloaded: 2016-12-09T23:32Z
Check the source to verify that this is the current version before use.

3.91 National Maintenance Work Requirement (NMWR). A maintenance serviceability standard for depot level reparables that do not have an existing depot maintenance work requirement and for field level reparables that are repaired by maintenance activities below the depot level maintainers for return to the Army supply system.

3.92 National Stock Number (NSN). 13-digit number assigned to a repair part to be used for requisitioning purposes.

3.93 Next Higher Assembly (NHA). Assembly or subassembly of which subject component(s) or subassembly are a subpart.

3.94 Nomenclature. The approved name or alphanumeric identifier assigned to an item, equipment, or component in agreement with an organized designation system.

3.95 Nondestructive Testing Inspection (NDTI). Testing of a nature, which does not impair the usability of the item.

3.96 Nuclear, Biological, and Chemical (NBC). Reference to decontamination procedures performed on equipment and/or personnel exposed to nuclear, biological, and chemical weapons.

3.97 Operator maintenance. Consists of inspecting, servicing, lubricating, adjusting, replacing, and repairing those items authorized by Logistic Management Information (LMI) and/or Maintenance Allocation Chart (MAC).

3.98 Orphan. Last line of a paragraph pushed to a new page, stranded alone (orphaned) at the top of the page without the rest of its paragraph.

3.99 Overall Grade Level (OGL). Computed average reading comprehensibility of specified number of document text samples.

3.100 Overhaul. That maintenance effort (service/action) prescribed to restore an item to a completely serviceable/operational condition as required by maintenance standards in appropriate technical publications. Overhaul does not normally return an item to like new condition.

3.101 Overhaul Inspection Procedure (OIP). Routine maintenance inspection conducted just prior to period specified for removal of aircraft for overhaul or retirement.

3.102 Page-based technical manual. A technical manual consisting of text, illustrations, and tabular data presented in a standard page-oriented format.

3.103 Part Number (P/N). A primary number used to identify an item used by the manufacturer (individual, company, firm, corporation, or Government activity) that controls the design, characteristics, and production of the item by means of its engineering drawings, specifications, and inspection requirements.

3.104 Phased maintenance inspection (aircraft). A thorough and searching examination of the aircraft and associated equipment. Removal of access plates, panels, screens, and some partial disassembly of the aircraft is required to complete the inspection. Inspections are due after an appointed number of flying hours since new or from the completion of the last inspection.

3.105 Pictorial. A type of illustration showing the physical appearance of equipment or component parts. This term is used instead of such general terms as illustration, drawing, and diagram.

Source: https://assist.dla.mil -- Downloaded: 2016-12-09T23:32Z
Check the source to verify that this is the current version before use.

3.106 Portrait mode. To print an image the regular way so that the longest edge of the form corresponds to the vertical axis.

3.107 Preshop analysis. To determine, prior to beginning maintenance activities, the extent of maintenance required returning the end item, assembly, subassembly, or component to a serviceable condition as specified by the depot level maintenance instructions.

3.108 Preventive maintenance (scheduled maintenance). The performance of scheduled inspections and maintenance functions necessary to keep the equipment in serviceable condition and ready for its primary mission.

3.109 Preventive Maintenance Checklist (PMC). A listing of all before, during, and after operation preventive maintenance checks, including tactical and safety checks, that the operator or crew performs to ensure that the equipment is mission capable and in good operating condition.

3.110 Preventive maintenance daily (aircraft). Inspection of aircraft and associated equipment after the last flight of the mission day or before the first flight of the next day. Some operational checks and removal of screens, panels, and inspection plates may be required to accomplish the inspection.

3.111 Preventive maintenance services inspection (aircraft). Special recurring inspection of aircraft and associated equipment after an appointed number of flying hours or days whichever occurs first (e.g., 10 flying hours or 14 days). Some operational checks and removal of screens, panels, and inspection plates may be required to accomplish the inspection.

3.112 Preventive Maintenance Checks and Services (PMCS). Periodic inspection and maintenance at scheduled intervals to ensure that the equipment and its components remain mission capable and in good operating condition. In aircraft, checks are required of mandatory safety-of-flight items. Lubrication is part of PMCS. PMCS procedures can be performed by maintainers at any level of maintenance not just by operators.

3.113 Proponent. An Army organization or staff, which has been assigned primary responsibility for material or subject matter in its area of interest.

3.114 Publication Identification Number (PIN). A number (assigned by APD to each publication) that can be found in DA PAM 25-30 and is comprised of 6 numerals and a 3-digit "change number" field that permits ordering a specific change to the publication (as in 001 for change 1, 023 for change 23).

3.115 Publication Number. The number shown on the cover of each publication as constructed per DA Pam 25-40, e.g., TM 1-1520-238-10.

3.116 Quality Assurance (QA). A planned and systematic pattern of all actions necessary to provide adequate confidence that the item or product conforms to established technical requirements.

3.117 Reading Grade Level (RGL). A measurement of reading difficulty of text related to grade levels (such as ninth grade level, fourteenth grade level, etc.).

3.118 Rebuild. Consists of those services/actions necessary for the restoration of unserviceable equipment to a like new condition in accordance with original manufacturing tolerances.

Source: https://assist.dla.mil -- Downloaded: 2016-12-09T23:32Z
Check the source to verify that this is the current version before use.

3.119 Reference designator. Letters or numbers, or both, used to identify and locate discreet units, portions thereof, and basic parts of a specific equipment, assembly, or subassembly.

3.120 Reliability, Maintainability and Supportability (RMS) and Operational Availability (Ao). Requirements imposed on materiel systems to ensure that they are operationally ready for use when needed, will successfully perform assigned functions, and can be economically operated and maintained within the scope of logistic concepts and policies.

3.121 Reliability Centered Maintenance (RCM). A systematic approach for identifying preventive maintenance tasks for an equipment end item in accordance with a specified set of procedures and for establishing intervals between maintenance tasks.

3.122 Remove/install. To remove and install the same item when required to perform service or other maintenance functions. Install may be the act of emplacing, seating, or fixing into position a spare, repair part, or module (component or assembly) in a manner to allow the proper functioning of equipment or a system.

3.123 Repair. The application of maintenance services (inspect, test, service, adjust, align, calibrate, and/or replace), including fault location/troubleshooting, removal/installation, and disassembly/assembly procedures, and maintenance actions to identify troubles and restore serviceability to an item by correcting specific damage, fault, malfunction, or failure in a part, subassembly, module (component or assembly), end item, or system. Repair is authorized by the LMI/MAC and the assigned maintenance level is shown as the fourth position code of the SMR code.

3.124 Repair part. Those support items that are an integral part of the end item or weapons system, which are coded as not repairable (i.e., consumable items).

3.125 Repair Parts and Special Tools List (RPSTL). The technical document which contains an introduction, list of repair parts, list of special tools, NSN index, part number index, and reference designator index for a specified equipment item.

3.126 Replace. To remove an unserviceable spare or repair part and install a serviceable counterpart in its place. Replace is authorized by the LMI/MAC and the assigned maintenance level is shown as the third position code of the SMR code.

3.127 Revision. A revision is comprised of corrected, updated, or additional pages or work packages to the current edition of a manual. It consists of replacement work packages that contain new or updated technical information, or improves, clarifies or corrects existing information in the current edition of the manual.

3.128 Schematic diagram. A graphic representation showing the interrelationship of each component or group of components in the system/equipment. The essential characteristic of these diagrams is that every maintenance-significant functional component is separately represented. Also, where appropriate, voltage readings should be shown.

3.129 Service. Operations required periodically keeping an item operating, i.e., to clean (includes decontaminate, when required), to preserve, to drain, to paint, or to replenish fuel, lubricants, chemical fluids, or gases.

Source: https://assist.dla.mil -- Downloaded: 2016-12-09T23:32Z
Check the source to verify that this is the current version before use.

3.130 Set. A unit and necessary assemblies, subassemblies, and parts connected together or used in association to perform an operational function (e.g., radio receiving set, measuring set, radar, or homing set which includes parts, assemblies, and units such as cables, microphones, and measuring instruments).

3.131 Source, Maintenance, and Recoverability (SMR) code. The five-position code containing supply/requisitioning information, maintenance level authorization criteria, and disposition instruction. The first two positions of the SMR code determine how to get an item. The third position represents who can install, replace, or use the item. The fourth position dictates who can do complete repair on the item. The fifth position represents who determines disposition action on unserviceable items.

3.132 Spare part. Those support items that are an integral part of the end item or weapons system that are coded as repairable (i.e., reparable items). Spares include those equipments authorized by TOE line item plus equipments, assemblies, and modules designated as operational readiness float. TOE training equipment is excluded.

3.133 Special tools. Those tools that have single or peculiar application to a specific end item/system.

3.134 Specialized Repair Activity (SRA). A level of maintenance usually characterized by the capability to perform maintenance functions requiring specialized skills, disciplined quality control, highly sophisticated and expensive special tools, and TMDE. Its phases normally consist of adjustments, calibration, alignment, testing, troubleshooting, assembly, disassembly, fault isolation, and repair of unserviceable parts, modules, and printed circuit boards (PCB).

3.135 Standard Generalized Markup Language (SGML). A language for document representation that formalizes markup and frees it of system and processing dependencies.

3.136 Subassembly. Two or more parts that form a portion of an assembly or a component replaceable as a whole, but having a part or parts that are individually replaceable (e.g., gun mount stand, window recoil mechanism, floating piston, intermediate frequency strip, mounting board with mounted parts).

3.137 Supply Catalog (SC). The DA publication, which is the configuration control document that provides the user identification of Sets, Kits and Outfits (SKO) and its components. It also provides user supply management data and is an accountability aid.

3.138 Sustainment Maintenance. Sustainment is off-system maintenance and is mainly repair of defective equipment/parts. Sustainment maintenance returns repaired equipment/parts to supply system.

3.139 System. A group of items united or regulated by interaction or interdependence to accomplish a set of specific functions.

3.140 Tags. Descriptive markup, as in a start-tag and end-tag.

3.141 Tailoring. The process of evaluating individual potential requirements to determine their pertinence and cost effectiveness. The tailoring of data requirements is limited to the exclusion of information requirement provisions and selecting or specifying applicable requirements.

3.142 Task. A sequence of user actions with a beginning and an end. User tasks relate to installation, checkout, operation, and maintenance of systems or equipment.

Source: https://assist.dla.mil -- Downloaded: 2016-12-09T23:32Z
Check the source to verify that this is the current version before use.

3.143 Technical Manuals (TM). Manuals that contain instructions for the installation, operation, maintenance, and support of weapon systems, weapon system components, and support equipment. TM information may be presented, according to prior agreement between the contractor and the Government, in any form or characteristic, including hard printed copy, audio and visual displays, electronic imbedded media, disks, other electronic devices, or other media. They normally include operational and maintenance instructions, parts lists, and related technical information or procedures exclusive of administrative procedures.

3.144 Test. To verify serviceability by measuring the mechanical, pneumatic, hydraulic, electrical, or electronic characteristics of an item and comparing those characteristics with prescribed standards.

3.145 Test, Measurement, and Diagnostic Equipment (TMDE). Any system or device used to evaluate the operational condition of an end item or subsystem thereof, or to identify and/or isolate any actual or potential malfunction. TMDE includes diagnostic and prognostic equipment, semiautomatic and automatic test equipment (with issued software), and calibration test or measurement equipment.

3.146 Time Between Overhaul (TBO) items. Those items having a definite retirement schedule within a defined overhaul interval, e.g., those items, which must be replaced within a system assembly, subassembly, or component between scheduled overhauls.

3.147 Title Block Page. The first page after the warning summary in the front matter portion of a TM. It identifies the TM by publication number, date, title, and NSN/part number/model of equipment covered in the manual.

3.148 Top-down generation breakdown. The pyramidal breakdowns of an end item, with the top item being the complete end item. The process of breakdown is established from the engineering drawing structure in an NHA progression until the lowest reparable in each family tree group is identified. All nonreparables (spare parts) can be identified in like manner to establish their NHA relationships.

3.149 DELETED.

3.150 Usable on code (UOC). A three-position alphanumeric code representing the applicable configuration in which an item is used. When an item is used on all configurations or when only one configuration is covered by the RPSTL, UOCs should not be shown.

3.151 User. A person using the technical manual.

3.152 Wiring diagram. Diagram illustrating signal flow or wiring connections. Where appropriate, voltage readings should be shown.

3.153 Work packages (WP). Presentation of information functionally divided into individual task packages in the logical order of work sequence. These WPs should be stand alone general information, description, theory, operating, maintenance, troubleshooting, parts, and supporting information units containing all information required for directing task performance.

3.154 XML stylesheet language (XSL). A language for transforming XML documents into other XML documents, such as HTML.

Source: https://assist.dla.mil -- Downloaded: 2016-12-09T23:32Z
Check the source to verify that this is the current version before use.

4. GENERAL REQUIREMENTS.

4.1 General. This standard provides the technical content requirements and mandatory style and format requirements for the preparation of page-based technical manuals (TMs) and subsequent revisions covering operation and maintenance, at all levels of maintenance through overhaul (depot), including Depot Maintenance Work Requirements (DMWRs) and National Maintenance Work Requirements (NMWRs). All requirements throughout this standard for depot maintenance or DMWRs shall be followed for NMWRs. Style and format requirements are provided in 4.7. Specific functional technical content requirements are provided in the following appendixes.

Appendix B	—	General Information, Equipment Description, and Theory of Operation
Appendix C	—	Operator Instructions
Appendix D	—	Troubleshooting Procedures
Appendix E	—	Maintenance Instructions
Appendix F	—	Repair Parts and Special Tools List (RPSTL)
Appendix G	—	Technical Manuals Supporting Information

4.2 Types of technical manuals. Appendix A, Content Selection Matrixes, lists specific technical content requirements for each type of maintenance manual, including multilevel TMs, covered by this standard. Each type of TM shall provide in detail the maintenance coverage prescribed for the applicable maintenance level(s) by the Maintenance Allocation Chart (MAC) and SMR-coded items.

4.3 Selective application and tailoring. This standard contains some requirements that may not be applicable to the preparation of all technical manuals. Selective application and tailoring of requirements contained in this standard are the responsibility of the acquiring activity and shall be accomplished through the use of the matrixes provided in Appendix A. The applicability of some requirements is also designated by one of the following statements: unless specified otherwise by the acquiring activity; as/when specified by the acquiring activity; or when specified by the acquiring or proponent activity.

4.4 Preparation of digital data for electronic delivery. Technical manual data prepared and delivered digitally in accordance with this standard shall be Extensible Markup Language (XML) tagged using the Document Type Definitions (DTDs) and the XML Stylesheet Language (XSL), or style sheets in accordance with MIL-STD-2361. Refer to 4.6 for information on obtaining or accessing the DTDs and style sheets. A sample source file is provided in MIL-HDBK-1222.

4.5 Use of the DTDs/Style sheets. The DTD referenced in this standard interprets the technical content and structure for the functional requirements contained in this standard and is mandatory for use. The XSLs referenced herein interpret the style and format. As specified by the contracting activity, XSLs or style sheets may be used to produce final reproducible paper copy for all TMs prepared in accordance with this standard. For additional information on DTDs and specific XSLs, refer to MIL-STD-2361.

4.6 Obtaining the DTDs/Style sheets. The DTD, style sheets, associated tag and attribute descriptions, which are XML constructs, may be obtained from the Army SGML Registry and Library (ASRL). The ASRL assets may be obtained using the methods described in MIL-STD-2361 as follows:

Source: https://assist.dla.mil -- Downloaded: 2016-12-09T23:32Z
Check the source to verify that this is the current version before use.

a. World Wide Web (WWW): ASRL homepage Uniform Resource Locator (URL) http://www.asrl.com/

b. U.S. Mail: Requested files will be mailed on CD-ROM DOS formatted or UNIX tar formatted. Requests may be submitted as follows:

Written request:
Director, APD- Army Publishing Directorate
ATTN: JDPSO-PAT-S
2461 Eisenhower Avenue
Alexandria, VA 22331-0302

Telephone Request:
Commercial: (703) 325-6231
DSN: 221-6231

4.7 Style and format. Style and format requirements for the technical content contained in TMs are provided in 4.7.1 through 4.7.27.4.8. See MIL-HDBK-1222 for additional information and examples. The US Government Printing Office Style Manual shall be used a general guide for capitalization, punctuation, compounding of words, numerals in text, and spelling of nontechnical words.

4.7.1 Examples of style and format. The examples provided at the rear of this standard are an accurate interpretation of the technical content, style and format requirements contained herein and shall be followed to ensure that the conforming Document Type Definition (DTD) can be used to develop digital data in accordance with MIL-STD-2361.

4.7.2 TM divisions. The hierarchical breakdown of a TM is: volumes (if required), chapters, and work packages (WPs), paragraphs, subparagraphs, and steps. Each division used should have at least two occurrences (for example where there is a Volume 1, there should be a Volume 2; where there is a Chapter 1, there should be a Chapter 2; etc.). Except for the RPSTL, volumes shall be partitioned only between chapters. Stand-alone RPSTL manuals may be volumized between parts lists <plwp>, special tools and parts list <stl_partswp>, kitsitswp>, bulk items list <bulk_itemswp>, and special tools list <stlwp>.

4.7.2.1 Volume size and content.

a. Division into volumes shall occur when the number of printed pages (excluding pocket TMs) exceeds 1,500 pages or 750 sheets. Each volume shall not exceed 1,500 pages or 750 sheets. A pocket TM (4 by 5-1/2 by 4 inches) or a pocket TM volume shall not exceed 200 pages or 100 sheets.

b. Each volume of a series shall display the TM number on its cover and all pages that make up the volume. Front matter for each volume of a series shall include a title block page and a table of contents. The first volume shall contain a complete (including all volumes information) table of contents.

c. Rear matter for each volume of a series shall contain as a minimum reporting errors and recommending improvements DA Forms 2028 and an authentication page.

d. Separate volumes shall not be used to distinguish between models of equipment (e.g., -10 for basic model, -10-1 for model A, -10-2 for model B, etc.).

Source: https://assist.dla.mil -- Downloaded: 2016-12-09T23:32Z
Check the source to verify that this is the current version before use.

4.7.2.2 Chapters. Chapters shall be used to divide TM data into specific functional information. Chapter types include General Information, Operating Instructions, Troubleshooting Information, Maintenance Information, Parts Information and Supporting Information. Each chapter shall be made up of one or more work packages.

4.7.2.3 Work packages. Work packages shall be used to logically divide TM data into functional descriptive or task-oriented information. Work packages shall begin on a right-hand page. Refer to FIGURE 1 for an example of a typical work package.

4.7.2.3.1 Work package size. To facilitate usability or the revision process, work packages should not exceed 30 pages. A series of maintenance tasks can be divided into two or more work packages unless it is determined that separating the task information would degrade usability (i.e., removal and installation of the gun turret in one work package, disassembly and reassembly of the gun turret in a second work package).

4.7.2.3.2 Work package content. Work packages (refer to FIGURE 1) shall contain a title block, initial setups, descriptive information, operating tasks, and maintenance tasks. These data types can be further divided into paragraphs, procedural steps, tables, lists, warnings, cautions and notes, and supporting illustrations. Refer to Appendix B through Appendix GI for the specific content requirements for each of the functional work package types (i.e., description information, operator's instructions, maintenance, troubleshooting, repair parts, and supporting information).

4.7.2.3.3 Development of individual work packages. Ideally, each WP in a manual will be an independent, stand alone data unit. It may be required to group some information or maintenance tasks in one work package and divide others into several WPs of suitable length. Typical examples of page-based technical content work packages are provided in this standard and in MIL-HDBK-1222. Division or selection of coverage will depend on various factors. These factors may include but are not limited to:

a. A specific work package that is required by this standard.
b. A specific work package that is required by the TM content selection matrix provided by the contract activity.
c. A WP may be determined by the operational modes, complexity of the maintenance action, or level(s) of maintenance covered. Separate maintenance WPs may be developed for the same equipment or component for different maintenance levels (e.g., a WP for operator's maintenance and a WP for field maintenance for the same item of equipment).
d. Two or more WPs for an identical maintenance task may be required because the task is performed differently due to differences in configurations.
e. More than one WP may be required because the size of the work package will exceed 30 pages. It is permissible to divide a set of maintenance tasks for a specific system, equipment, or component into two or more WPs to comply with the page size limitation (e.g., removal and installation procedures could be placed in one WP and disassembly, cleaning, repair, and reassembly could be placed in a second WP).
f. Development of more than one WP because the reduction in the size of the work package would make it more usable.
g. Confining the information to one WP because dividing the information into several work packages would degrade the usability.

Source: https://assist.dla.mil -- Downloaded: 2016-12-09T23:32Z
Check the source to verify that this is the current version before use.

h. Separate WPs due to different initial setup information for a set of maintenance tasks for a repairable component. If the support equipment, tools, materials and personnel used to perform removal and installation is very different than the support equipment, tools, materials and personnel used to perform disassembly and reassembly for the same system or component, it may be better to separate this information into two WPs.

i. Unless otherwise specified by the acquiring activity, the supporting information work packages may, as necessary, exceed 30 pages.

4.7.3 Type size and style. Type style, size, and spacing shall be in accordance with best commercial practices for technical publications. However, the minimum font size for a regular manual is 8 point, logbook is 6 point, pocket manual is 6 point, and the minimal for a graphic is 6 point. Type shall be proportionally spaced (non mono spaced). Fonts shall be selected for a balance between readability and economy of space. Setting text in all capital letters shall be limited to appropriate uses, such as major headings, acronyms, and equipment markings.

4.7.4 Page size and orientation. The TM shall be prepared in a size selected from TABLE I and specified by the acquiring activity. Orientation of pages, either vertical (portrait) or horizontal (landscape), shall be consistent throughout a given manual for ease of use. The growing prevalence of TMs used in electronic display mode (instead of paper) makes this consistency extremely important. Exceptions may be made only if essential for proper grouping of information for the user's benefit. Otherwise, information shall be formatted or reformatted so that all pages have the same orientation.

TABLE I. Manual styles and trim sizes.

Style	Trim Size	Orientation	Maximum Printing Area
Pocket	4 x 5½ 5½ x 4	Vertical Horizontal	$3^1/_8$ x 5 5 x $3^1/_8$
Logbook	6½ x 9½ 9½ x 6½	Vertical Horizontal	5½ x 8½ 8½ x 5½
Standard	8½ x 11 11 x 8½	Vertical Horizontal	7 x 10 7 x 10
Double Standard	17 x 11	Horizontal	15¾ x 9

4.7.5 Foldout pages.

a. Foldout pages, if needed, shall be the same height as regular pages in the standard manual only, and shall be folded 2, 4, or 6 times, depending on the width necessary. Each foldout shall have a blank apron wide enough for the user to look at the data while reading text elsewhere in the TM. Foldouts shall not be used in repair parts and special tools lists (RPSTL) or operator-only TMs.

b. TABLE II lists the foldout maximum trim sizes and foldout maximum printing area for foldout pages. The minimum margin is ½ inch top and bottom and ½ inch on the side opposite the binding edge.

Source: https://assist.dla.mil -- Downloaded: 2016-12-09T23:32Z
Check the source to verify that this is the current version before use.

c. Foldout pages shall be the last printed material in the TM or volume.

TABLE II. Foldout maximum page sizes (in inches).

Manual Trim Size	Foldout Maximum Page Trim Size (Including Apron)	Foldout Maximum Printing Area
8½ x 11 11 x 8½	45 x 11 11 x 45	36 x 10 10 x 36

4.7.6 Final reproducible copy (FRC). FRC shall be a direct output of the digital TM files which have been authenticated, valdiated, and verified. The master copy of any TM is a set of digital files, not the hard-copy results. There are no particular layout requirements for FRC distinct from those for non-final drafts or proofs. The only special criterion for FRC is reproducibility: Its resolution and contrast must be sufficient for creation of offset plates or raster page images without loss of detail that would be noticeable to users.

4.7.7 Warnings, cautions, and notes.

4.7.7.1 Warning **<warning>**. A warning identifies a clear danger to the person doing that procedure.

4.7.7.2 Caution **<caution>**. A caution identifies risk of damage to the equipment.

4.7.7.3 Notes **<note>**. A note is used to highlight essential procedures, conditions, or statements or convey important instructional data to the user.

4.7.7.4 Display of warnings, cautions and notes.

a. Warnings, cautions, and notes shall appear as follows:
   (1) For tasks, they shall follow the title of the associated task.
   (2) For procedures, they shall follow the title of the associated procedure.
   (3) For steps, they shall precede the associated step.
b. If multiple warnings, cautions, and notes apply to the same text, warnings shall appear first and cautions shall appear second, and notes shall appear last.
c. The header **WARNING**, **CAUTION**, or **NOTE** shall be bold and centered above the appropriate text. Headers shall not be numbered.
d. Warnings may have safety or hazard icon(s) and shall appear below the warning header.
e. Caution may have icon(s) depicting equipment damage and shall appear below the caution header.
f. When a warning, caution, or note consists of two or more paragraphs, the header **WARNING**, **CAUTION**, or **NOTE** shall not be repeated above each paragraph.
g. Warnings, cautions, and notes on unrelated topics that pertain to the same task, procedure or step(s) may be grouped under one heading. When grouping warnings, cautions, or notes each warning, caution or note shall be separated by at least one line and may be bulleted.
h. Warning, caution, and note text shall be indented on the right and left.

Source: https://assist.dla.mil -- Downloaded: 2016-12-09T23:32Z
Check the source to verify that this is the current version before use.

i. Layout shall not result in warnings, cautions, and notes divided so first lines of text or groups of icons appear on one page and remaining lines or groups of icons on another page.

j. Layout shall avoid warnings, cautions, and notes being placed on a different page than the paragraph to which they apply.

k. Warnings shall include basic first aid instructions/guidance in the event of exposure/injury (e.g., flush eyes with water, seek medical attention, cleanse affected area with soap and water, etc).

l. Notes shall be allowed in the manual other than a task, a procedure or a step.

4.7.7.5 Icons. The use of standardized icons to improve readers' recognition of hazards is encouraged. Approved icons for use in technical manual warnings are contained in FIGURE 2 and FIGURE 3. Additional non-standardized warning icons shall be approved by the acquiring activity. Equipment damage caution icons shall be approved by the acquiring activity. Icons used shall be defined in the General Information Work Package under the list of abbreviations/acronyms (refer to B.5.2.13).

4.7.7.5.1 Development of icons. Icons are enclosed in a square or rectangular box (refer to FIGURE 2 and FIGURE 3). The signal word(s) for icons appear outside the box placed to the right or below the icon(s). These approved icons are available online at https://www.logsa.army.mil/mil40051/tmsspecs.htm.

4.7.7.5.2 Safety warnings with icons **<icon>**. The approved safety warning icons provided in FIGURE 2 can be used in conjunction with the **WARNING** header and description of the hazard. For additional information on the use and placement of warnings and icons, refer to MIL-HDBK-1222.

4.7.7.5.3 Hazardous materials warnings **<warning>**. Procedures prescribed for the operation and maintenance of equipment shall be consistent with the safety standards established by the Occupational Safety and Health Act (OSHA) Public Law 91-596 and Executive Order 12196. When exposure to hazardous chemicals or other adverse health factors or use of equipment cannot be eliminated, guidance pertaining to the exposure shall be included in the TM. A list of personnel protective devices should also be included. Hazardous materials warnings may be presented in the standard warning format without an icon, or in conjunction with an icon, or a combination of icons (as described in 4.7.7.4). The acquiring activity shall approve the use of icons other than those presented in FIGURE 3. Hazards that result from a combination of materials must clearly be identified to indicate that mixing or combining the materials creates the hazard.

4.7.7.5.3.1 Format for hazardous materials warnings with icons **<icon>**. Hazardous materials warnings with icons consist of a **WARNING** header, the icon(s), and a full description of the hazardous material and the precautions to be taken.

Source: https://assist.dla.mil -- Downloaded: 2016-12-09T23:32Z
Check the source to verify that this is the current version before use.

4.7.7.5.3.2 Abbreviated format hazardous materials warnings with icons **<icon>**. For commonly used substances only (e.g., dry cleaning solvent, hydraulic fluids, paints, etc.), an abbreviated format may be used for hazardous materials warnings. The abbreviated format consists of the **WARNING** header (refer to 4.7.7.4c), the icon(s), and the signal word(s) (e.g., ISOPROPYL ALCOHOL, TT-I-735) of the hazardous material. The full description of the warning shall be placed in the warning summary. Icons may be used in technical manuals warnings either singly or in combination. When icons are used in combination, the placement and format should adhere to the methods provided in MIL-HDBK-1222.

4.7.7.5.4 Equipment damage caution icons **<icon>**>. The equipment damage caution icons can be used in conjunction with the **CAUTION** header and description of the equipment damage. For additional information on the use and placement of cautions and icons, refer to the requirements specified in 4.7.7.4**.**

4.7.8 Chapters.

4.7.8.1 Chapter title page **<titlepg>**. Each chapter shall begin with a chapter title page. See FIGURE 4 for an example of a chapter title page. A chapter title page shall always be a right-hand page. A separate chapter title page is not required for pocket size manuals. For pocket manuals, the chapter number and title may be placed on the top of the first page of the first work package of the chapter.

4.7.8.2 Chapter numbering. Chapters shall be numbered in sequential order throughout the TM using Arabic numerals. Chapters shall not be renumbered in separate volumes.

4.7.9 Work packages.

4.7.9.1 Work package identification information **<wpidinfo>**. All work packages shall include the identification information entries in the following sequential order, as applicable (refer to FIGURE 5).

a. Maintenance levels <**maintlvl**>. The maintenance level(s) shall be included (e.g., field maintenance).
b. WP title <**title**>. The title of the individual work package shall be listed (i.e., M144 Shop Van Semitrailer General Information).
c. Effectivity notice <**appconfig**>. If applicable, an effectivity notice shall be included. When the work package does not apply to all configurations of the weapon system/equipment, the applicable configurations <**name**> covered by the work package shall be listed. Omit this requirement if the same tasks/procedures apply to all configurations. (If certain configurations require different tasks/procedures, separate work packages shall be prepared.)
d. DELETED.
e. Joint use. When TMs are acquired and specified by the Army for joint use with another or other Services (Joint Service TMs), work packages in joint publications which do not apply to all Services concerned shall be marked to indicate the Services to which they apply (for example, LANDING GEAR MAINTENANCE (ARMY ONLY)).

Source: https://assist.dla.mil -- Downloaded: 2016-12-09T23:32Z
Check the source to verify that this is the current version before use.

4.7.9.2 Initial setup information **<wpinfo>**. Unless otherwise specified herein, all work packages shall contain initial setup instructions. A sample initial setup is provided in MIL-HDBK-1222. When no initial setup instructions are required to perform operating tasks, the title **INITIAL SETUP** shall be included with the words "**Not Applicable**". It provides the maintenance technician with general information, equipment, parts, material, and authorized personnel required to perform and complete all the operating tasks included in the work package. As appropriate, referencing shall be established for all supporting information items. Setup information requirements are described below.

a. Test equipment <**testeqp**>. All test equipment required to perform the procedure shall be listed by name **<name>**, WP containing an overall listing of tools and special tools listed by WP number and item number, or document number **<itemref>**. Referencing will eliminate the need to repeat or update the part and model numbers throughout the TM.

b. Tools and special tools <**tools**>. The tool kit (box) assigned to the mechanic (on a 1-per-mechanic-by-MOS basis) to be used in maintenance of a particular equipment shall be listed by name **<name>**, WP containing an overall listing of tools and special tools listed by WP number and item number, or supply catalog (SC), or TM number **<itemref>**. No tool in the kit shall be further identified. Other tools required for performance of all tasks for the maintenance levels covered in the work package shall also be identified in the initial setup. "Other tools" includes tools that are part of/components of shop sets authorized to sections/teams; tools authorized by RPSTL and CTA 50-909; CTA 50-970; special and fabricated tools; and items of Test, Measurement, and Diagnostic Equipment (TMDE). Referencing will eliminate the need to repeat or update the part and model numbers throughout the TM.

c. Materials/parts <**mtrlpart**>. All expendable items and support materials, mandatory parts, bulk items, and flight safety critical aircraft parts shall be listed by, as a minimum, name **<name>**, quantity **<qty>**, if applicable, and WP containing an overall listing of tools and special tools listed by WP number and item number **<itemref>**, if any applicable. Referencing will eliminate the need to repeat the part and numbers throughout the TM. For example,

Material/Parts

Grease (WP 0120, Item 5)
Range lock (WP 0120, Item 10)
Frequency Converter (WP 0122, Item 3)
Bracket Assembly, Chemical Alarm (WP 0121, Item 4)
Clamp, Loop (TM 11-1520-238-23P, Group 110503)

d. Personnel required <**persnreq**>. Personnel **<name>** and the number of personnel **<qty>** shall be identified if the task requires more than one. The Military Occupational Specialty (MOS) designation **<mos>** is not necessary, but it may be included. For example,

Source: https://assist.dla.mil -- Downloaded: 2016-12-09T23:32Z
Check the source to verify that this is the current version before use.

Personnel Required

Artillery Mechanic 68M10 (1)
Artillery Mechanic 66J30(1)

e. References <**ref**>. When necessary, other work packages, TMs, foldouts, and other sources (<**link**>/<**extref**>/<**xref**>) that are needed to complete the operating tasks shall be listed here. Only references not listed in equipment conditions shall be listed. For example,

References

TM 9-1015-252-20&P

WP 0100

f. Equipment conditions <**eqpconds**>. Any special equipment conditions required before the procedure can be started shall be listed here and cross-referenced to the appropriate source (<**link**>, <**extref**> or <**xref**>) for setting up the condition <**condition**>. For example,

Equipment Condition

Firing mechanism removed (WP 0010)

g. Special environmental conditions <**specenv**>. Any special environmental conditions (such as ventilation, lighting, or temperature) <**condition**> that are required shall be listed here. The reason <**reason**> that such conditions are needed shall be explained. For example,

Special Environmental Condition

Darkened area required for testing lights.

h. Drawings required <**dwgreq**>. When necessary, all drawings (which are not included in the work package) required to complete the maintenance tasks shall be listed here. Drawings shall be listed by title <**dwgname**> and drawing number <**dwgno**>. For example,

Drawings Required

Power Supply Schematic (132E470092)

i. Estimated time to complete the task <**time.to.complete**>. If required by the acquiring activity, the estimated time it will take to complete the operating task shall be included. Approved Logistics Management Information (LMI), and service experience, performance data on similar equipment, and all other reliability, availability, and maintainability (RAM) data available shall be used to estimate the time required to complete the task. For example,

Time to Complete

8 Hours

Source: https://assist.dla.mil -- Downloaded: 2016-12-09T23:32Z
Check the source to verify that this is the current version before use.

4.7.9.3 Work package sequential numbering. To maintain a sequential order in the TM and to facilitate referencing, each work package (WP) shall initially be assigned a four digit number beginning with the number 0001. The work package sequence numbers shall run consecutively throughout the TM. For example, the first work package in Chapter 2 will be assigned the number immediately following the last work package number in Chapter 1 (e.g., if 0010 is the last WP in Chapter 1, 0011 will be the first work package in Chapter 2). WP sequence numbers shall be assigned in numerical sequence (refer to FIGURE 1).

4.7.9.3.1 Assignment of new work packages sequence numbers for a change. A new WP that is added to the end of a non-volumized TM or to the end of the last volume of a multi-volume TM shall use the next available four digit WP number. For example, if 0098 is the number of the last WP in the TM, 0099 shall be the number of the new WP. A new WP that is inserted between two WPs shall use a point numbering scheme to create a new sequence number that logically fits between the two existing WP numbers. Point numbers shall start with “1” and continue in numerical sequence as needed. If the WPs already have point sequence numbers, an additional point level shall be added to create a new sequence number that follows the same criteria. For example, to insert three WPs between WPs 0010 and 0011, the numbers 0010.1, 0010.2, and 0010.3 shall be used. For example, to insert a WP between 0010 and 0010.1, the number 0010.0.1 shall be used. For example, to insert two WPs between 0010.2 and 0010.3, the numbers 0010.2.1 and 0010.2.2 shall be used. For example, to insert a WP between 0010.3 and 0011, the number 0010.4 shall be used.

4.7.9.3.2 Deletion of work packages in a change. When a work package is deleted in a change, the work package shall be removed and a page inserted with astatement that says "WP XXXX was deleted" and a vertical bar shall be placed next to this statement. The deleted work package shall be listed on the change transmittal sheet and the list of effective pages/work packages with the word "DELETED" next to it. All work packages following the delted work package shall retain their orignal work package sequence number.

4.7.9.3.3 Assignment of work package sequence numbers in volumized TMs. When a TM is divided into two or more volumes, the WP sequence number shall continue in sequence. The first volume shall contain as many WPs as necessary beginning with 0001. The work packages contained in the second and subsequent volumes shall be numbered consecutively beginning with the number immediately following the last work package sequence number in the preceding volume.

4.7.9.4 Work package page numbering. Each work package shall be page numbered consecutively using the four digit work package sequence number followed by -1, -2, -3, etc. (e.g., 0001-1, 0001-2, etc.). Page numbers shall be centered at the bottom of the page. Even numbers shall be assigned to the left-hand pages and odd numbers to right-hand pages (refer to FIGURE 1).

Source: https://assist.dla.mil -- Downloaded: 2016-12-09T23:32Z
Check the source to verify that this is the current version before use.

4.7.9.5 Work package identification number. A unique number shall be assigned to each work package. This identifier may be used for data base retrieval purposes. This WP identification number will not appear on the printed page and shall not be confused with the WP sequence number in 4.7.9.3. It shall be assigned when preparing the document instance in accordance with the modular DTDs and shall not be changed throughout the life of the WP. The WP identification number shall consist of an alpha designation for the type of information contained in the work package, a five digit block number assigned by the acquiring activity, and the TM number less the maintenance level dash numbers. The TM number is used only to provide uniqueness and avoid duplication of a WP identification number, other than that it shall not have significance. When reusing a WP, the same WP identification number shall be used from TM to TM.

a. The following alpha designators shall be assigned to the specific types of information contained within the work packages.

G	Descriptive information and theory of operation
I	Inspection
O	Operator instructions
T	Troubleshooting procedures
M	Maintenance instructions
R	Repair Parts and Special Tools List (RPSTL)
S	Supporting Information

b. Examples of work package data base identification numbering are shown below.

M00432-9-1425-646

M	Identifies a WP containing maintenance instructions.
00432	Identifies the 432nd work package containing specific maintenance instructions that was initially developed for the M270 Armored Vehicle Mounted Rocket Launcher.
9-1425-646	Identifies the M270 Armored Vehicle Mounted Rocket Launcher TM. This is the TM under which this WP was initially developed.

T02000-1-1520-238

T	Identifies a WP containing troubleshooting procedures.
02000	Identifies the 2000th work package containing specific troubleshooting procedures that was initially developed for the AH-64A Helicopter.
1-1520-238	Identifies the AH-64A Helicopter TM. This is the TM under which this WP was initially developed.

Source: https://assist.dla.mil -- Downloaded: 2016-12-09T23:32Z
Check the source to verify that this is the current version before use.

4.7.10 Maintenance tasks and descriptive information. Procedural maintenance tasks or descriptive information contained in a WP shall have a paragraph title. When it is necessary to divide a maintenance task into subtasks, for clarity, subparagraph titles shall be used (refer to 4.7.11.2). The words "**END OF TASK**" shall be placed at the end of any task within a work package. For RPSTLs the words "**END OF FIGURE**" shall be placed after each parts list. The words "**END OF WORK PACKAGE**" shall be placed below the last data item (i.e., text, illustration, etc.) at the end of any WP, except the following RPSTL WPs; Repair Parts List, Kits Part List, Bulk Items, Repair Parts for Special Tools List, and Special Tools List the words "**END OF FIGURE**" shall be placed after the parts list.

4.7.11 Paragraphs.

4.7.11.1 Paragraph numbering. Paragraphs and subparagraphs within a WP shall be unnumbered.

4.7.11.2 Paragraphs and subparagraph titles. Paragraphs and subparagraphs shall have titles. The title shall begin at the left margin. Paragraph requirements shall be as follows:

a. Primary paragraph plus 4 subparagraph levels.
b. Multiple primary paragraphs in a WP.
c. Multiple blocks of text under a title are allowed.
d. When a paragraph is continued on subsequent pages, the first level paragraph title shall be placed at the top of those pages (e.g., REMOVAL - Cont).

4.7.11.2.1 Format.

a. Primary Paragraph - Paragraph shall be flush left. Title shall be bold and capital case. Block text shall start on a separate line and shall have a blank line between title and text block
b. Subparagraph Level 1 - Paragraph shall be flush left. Title shall be bold and title case. Block text shall start on a separate line and shall have a blank line between title and text block
c. Subparagraph Level 2 - Paragraph shall be flush left. Title shall be bold, title case, and end with a period. Block text shall start immediately after the title
d. Subparagraph Level 3 - Paragraph shall indent first line 5 spaces and the remaining text flush left. Title shall be bold, title case and end with a period. Block text shall start immediately after the title.
e. Subparagraph Level 4 - Paragraph shall indent first line 10 spaces and the remaining text flush left. Title shall be bold, title case and end with a period. Block text shall start immediately after the title.

4.7.12 Procedural steps. Procedural steps shall be used to present detailed step-by-step instructions for performing an operational or maintenance task. Subordinate steps may be used to differentiate an expert step from a novice step. When subordinate steps are used in combination with an expert step, the subordinate steps should appear indented under the expert step.

Source: https://assist.dla.mil -- Downloaded: 2016-12-09T23:32Z
Check the source to verify that this is the current version before use.

4.7.12.1 Procedural step levels. When required, procedural steps shall be divided into no more than six levels. The following demonstrates, by example, how procedural steps and subordinate steps levels shall be formatted and numbered.

EXAMPLE:

1. Primary procedural step number (1, 2, 3, etc.) is flush left. Text begins two spaces after the period following the numeral. The text is blocked.

   a. The first-level procedural subordinate step letters, (a, b, c, etc.), are immediately below the text of the first-level procedural steps. The text is blocked. If additional subordinate step letters are required, use aa., ab., etc. after z.

      (1) The second-level procedural subordinate step numbers, ((1), (2), (3), etc.), are immediately below the text of first-level procedural subordinate steps. The text is blocked.

         (a) The third-level procedural subordinate step letters, ((a), (b), (c), etc.), are immediately below the text of second-level procedural subordinate steps. The text is blocked. If additional subordinate step letters are required, use (aa), (ab), etc., after (z).

            1 The fourth-level procedural subordinate step numbers, (1, 2, 3, etc.), are immediately below the text of third-level procedural subordinate steps. The text is blocked.

               a The fifth-level procedural subordinate step letters, (a, b, c, etc.), are immediately below the text of fourth-level procedural subordinate steps. The text is blocked. If additional subordinate step letters are required, use aa, ab, etc., after z.

4.7.12.2 Procedural step titles. Procedural steps shall not have titles.

4.7.13 Tables and lists.

4.7.13.1 Table locations. Tables shall be inserted in the TM on the same page or as soon after the first reference in the text as possible. Full-page tables using a horizontal (landscape) format shall be positioned so that the page must be rotated 90 degrees clockwise to be read. The table number and title shall be placed at the top of the table.

4.7.13.2 Table numbering. Tables which will be referenced or listed in the table of contents shall be numbered. Table numbers shall be consecutive within each WP in the order of their reference starting with Arabic number 1. If only one table is referenced in a WP, it shall be numbered.

4.7.13.3 Table titles. Tables which will be referenced or listed in the table of contents shall have a title. The titles shall identify the contents or purpose of the table and distinguish that table from others in the TM. Preferred table title format is provided in MIL-HDBK-1222.

Source: https://assist.dla.mil -- Downloaded: 2016-12-09T23:32Z
Check the source to verify that this is the current version before use.

4.7.13.4 Table format. Tables designated as "**standard information**" have no deviations to the number of columns, the titles in the column headings, and required format. The standard information format is automatically generated by the applicable style sheet. The DTD provides for non-standard tables, the data required in Appendix B through Appendix G I shall be included regardless of format used. Preferred style and format for all non-standard tables is provided in MIL-HDBK-1222. For non-standard tables, the data required in Appendix B through Appendix I shall be included regardless of format used.

4.7.13.5 Standard information tables. A list of tables that contain standard information is provided below:

a. Controls and Indicators (Appendix C, Operator Instructions)
b. Checking Unpacked Equipment (Appendix E, Maintenance Instructions)
c. Preventive Maintenance Checks and Services (PMCS) (Appendix E, Maintenance Instructions)
d. Classification of Material Defects (Appendix E, Maintenance Instructions)
e. Overhaul and Retirement Schedule (Appendix E, Maintenance Instructions)
f. Depot Mobilization Requirements (Appendix E, Maintenance Instructions)
g. Repair Parts List (Appendix F, Parts Information and Repair Parts and Special Tools List (RPSTL))
h. Special Tools List (Appendix F, Parts Information and Repair Parts and Special Tools List (RPSTL))
i. NSN Index (Appendix F, Parts Information and Repair Parts and Special Tools List (RPSTL))
j. Part Number Index (Appendix F, Parts Information and Repair Parts and Special Tools List (RPSTL))
k. Reference Designator Index (Appendix F, Parts Information and Repair Parts and Special Tools List (RPSTL))
l. Maintenance Allocation Chart (MAC) (Appendix G, Technical Manual Supporting Information)
m. Tools and Test Equipment Requirements for MAC/AMAC (Appendix G, Technical Manual Supporting Information)
n. Remarks (MAC/AMAC) (Appendix G, Technical Manual Supporting Information)
o. Expendable and Durable Items List (Appendix G, Technical Manual Supporting Information)
p. Mandatory Replacement Parts List (Appendix G, Technical Manual Supporting Information)
q. Component of End Items (COEI) List (Appendix G, Technical Manual Supporting Information)
r. Basic Issue Items (BII) List (Appendix G, Technical Manual Supporting Information)
s. Additional Authorization List (AAL) (Appendix G, Technical Manual Supporting Information)
t. Tools Identification List (Appendix G, Technical Manual Supporting Information)

Source: https://assist.dla.mil -- Downloaded: 2016-12-09T23:32Z
Check the source to verify that this is the current version before use.

u. Flight Safety Critical Aircraft Parts (FSCAP) (Appendix G, Technical Manual Supporting Information)

4.7.13.6 Footnotes to tables. For preferred formatting of numbering footnotes in tables, refer to MIL-HDBK-1222. Footnotes shall appear at the bottom of the table. For multiple page tables, the footnotes shall appear on the last page of the table. The footnotes shall not be placed at the bottom of each page of multiple page table.

4.7.13.7 Tabular information. Small amounts of tabular information may be prepared in a two-column format without identifying it as a table. Each column may have a header.

4.7.13.8 Lists. Lists may be used in lieu of tables, when appropriate. Lists may be unnumbered, numbered sequentially, or lettered alphabetically. They may have an optional title. Three types of lists are identified below.

a. Definition list. The definition list shall consist of the term and the definition. The definition list may have headers, "**Term**" and "**Definition**" above the appropriate sections of the list.
b. Random list. The random list shall consist of one or more items in a random order.
c. Sequential list. The sequential list shall consist of one or more items in a specified order, such as alphabetic, numeric, or alphanumeric.

4.7.14 Placement of text.

a. Preferred text format for 8½ by 11-inch manuals is single column (page wide), although double column can be used. Both single and double column formatted WPs can be included in a single TM if it would make the data more readable or comprehensible, however, both formats should not be used in the same chapter. Text is single spaced (double spaced between procedural steps).
b. Procedural step text shall not be placed on an illustration.
c. Text shall always be positioned within the image area (within margins). The text shall be positioned above and below the illustration, and not on the illustration left or right sides.
d. The first line of a paragraph shall not be located at the bottom of the page or column. The last line of a paragraph shall not be placed at the top of a new page. Do not place the title or header on the last line of a page or column. Widows and orphans are not allowed.

4.7.15 Placement of illustrations. Illustrations shall be placed as close to their reference in text as possible. Illustrations may float on a page to reduce the white space on a page. Whenever possible, place illustrations on the same or facing page of associated text. Foldout illustrations shall not be included in work packages, but shall follow the last work package, the glossary, or the alphabetical index, whichever forms the last portion of the manual or volume.

4.7.15.1 Rotating illustrations. When necessary, illustrations may be placed sideways on a page (rotated 90 degrees counterclockwise).

4.7.15.2 Placement of text and related illustrations for pocket TMs. Place text for pocket-size manuals on the right-hand pages with supporting illustration on the facing left-hand pages.

4.7.15.3 Repeating illustrations. Illustrations are not repeated unless necessary to support multi-page descriptions of tasks or to support a different requirement in another part of the TM.

Source: https://assist.dla.mil -- Downloaded: 2016-12-09T23:32Z
Check the source to verify that this is the current version before use.

4.7.16 Margin data. Margin data (usually headers and footers) shall be placed outside the area of the page used for either text, full-page tabular data, or full-page illustrations, but within the printing area dimensions of the page (refer to 4.7.16.1 and 4.7.16.2). Complete headers and footers shall be prepared for all pages except TM covers and title block pages and transmittal and rear matter pages (except for pocket-size TM, the outside back cover has the TM number).

4.7.16.1 Headers. Headers shall consist of the TM number centered at the top of each page and the WP sequence number (refer to 4.7.9.3) placed at the extreme top right of each page (refer to FIGURE 1). If the manual is jointly used by two or more Services, only the acquiring activity's TM number shall be placed on each page. TM numbers for pocket TMs are required on front and back covers only. For pocket manuals only, the WP sequence number may be placed only on the first page of the work package providing it is included as part of the page number on all pages of the work package.

4.7.16.2 Footers. Footers shall include the security classification markings (refer to 4.7.22) if any, the page numbers, (refer to FIGURE 1) and other information as specified by the acquiring activity (i.e., change designator).

4.7.16.2.1 Page numbering. Except for foldout pages, all TM page numbers shall be centered at the bottom of the page. Even numbers shall be assigned to left-hand pages and odd numbers to right-hand pages. For horizontal TMs, the upper pages shall have even numbers, and the lower pages shall have odd numbers. Page numbers shall be in boldface type. Page numbering for RPSTLs shall also be in accordance with this paragraph and 4.7.16.2.1.1 through 4.7.16.2.1.3.

4.7.16.2.1.1 Front matter. Page numbering for front matter shall be as follows.

a. Front cover. Front covers shall be unnumbered.
b. Warning summary. The pages of the warning summary shall be numbered consecutively using lowercase letters (i.e., a, b, c, etc.).
c. Change transmittal page. The change transmittal page shall be unnumbered.
d. List of effective pages/work packages. When a list of effective pages/work packages is prepared, it shall be numbered with upper case letters (i.e., A, B, etc.).
e. Title block page, Table of contents, List of tables, List of illustrations and the How to Use This Manual section. These pages shall be numbered consecutively using lower case Roman numerals beginning with i (i.e., i, ii, iii, etc.). Numbering shall be continuous and shall not start over with “i” for the table of contents or How to Use This Manual information.

4.7.16.2.1.2 Rear matter. DA Form 2028s, authentication pages, metric conversion charts (on the inside of the back cover), and back covers shall be unnumbered.

4.7.16.2.1.3 Blank pages. A blank page shall be assigned a number, but it shall appear on the preceding or following page. For example, if page 0001-10 of a work package is blank, page 0001-9 shall have the number 0001-9/10 blank; or if page 0001-1 of a work package is blank, page 0001-2 shall have the number 0001-1 blank/2.

4.7.16.2.1.4 Foldout page numbers. Foldout page numbers shall be numbered consecutively using Arabic numbers prefixed by the letters “FP”. The reverse side of foldout pages shall be blank and each foldout page number shall include a blank page notation (e.g., FP-1/(FP-2 blank), FP-3/(FP-4 blank), etc.) (refer to FIGURE 6).

Source: https://assist.dla.mil -- Downloaded: 2016-12-09T23:32Z
Check the source to verify that this is the current version before use.

4.7.17 Abbreviations and acronyms.

a. The first use of abbreviations and acronyms shall have the word(s) spelled out completely with the abbreviation or acronym in parentheses immediately after the word(s). Abbreviations and acronyms which are accepted as words (radar, sonar, laser, etc.) need not be spelled out. When a phrase is abbreviated as an acronym, capitalize the first letter of each word and do not separate letters in the acronym by periods (for example, “Repair Parts and Special Tools List (RPSTL)”).

b. Abbreviations and acronyms used shall be in accordance with ASME Y14.38, except that abbreviations may be plural (s) or possessive ('s). New abbreviations and acronyms shall not duplicate those presently listed in ASME Y14.38 where possible.

c. All nonstandard abbreviations and acronyms (excluding acronyms for Electrostatic Discharge (ESD) and Hardness-Critical Processes (HCP)) shall be defined in the “list of abbreviations/acronyms” paragraph of the general information work package. Refer to Appendix B, General Information, Equipment Description, and Theory of Operation.

d. Abbreviations and acronyms used in tables, but not found in the text or in any other portion of the TM, shall be spelled out in a footnote to the applicable table. Abbreviations and acronyms used in illustrations or figures, but not found in the text or in any other portion of the TM, shall be spelled out in a note to the applicable illustration or figure.

e. When abbreviations or acronyms are used as markings on the equipment (placarding), the same abbreviations or acronyms shall be used in the TM.

4.7.18 Symbols.

4.7.18.1 General information for symbols. All nonstandard symbols shall be defined in the list of abbreviations and acronyms contained in the General Information work package (refer to B.5.2.13). New symbols shall not duplicate those presently listed in ASTM-F856 where possible.

4.7.18.2 Metric symbols. Metric symbols shall be in accordance with IEEE 945-1984.

4.7.19 Nuclear hardness (hardness-critical processes) marking. All Hardness-Critical Processes shall be marked with the acronym **HCP** as shown in 4.7.19.b. The acronym shall be prepared in boldface type and in the same style and size as the adjacent text. The acronym shall not be shown with the titles in the table of contents. Use of the acronym is as follows.

a. When the entire task and all subordinate paragraphs and steps relate to establishing nuclear hardness, the acronym HCP shall precede the task title. (For example, **HCP** DISASSEMBLY.)

b. When the entire task and all subordinate paragraphs and steps do not contribute to establishing nuclear hardness, only those which do contribute shall be annotated with the acronym HCP. For example,

SERVICING

1. _____
2. **HCP** _____

Source: https://assist.dla.mil -- Downloaded: 2016-12-09T23:32Z
Check the source to verify that this is the current version before use.

c. Operating or maintenance actions which could degrade hardness, but which are not directly involved in establishing nuclear hardness, shall not be annotated with the acronym, but shall be preceded by a caution.

4.7.20 Electrostatic Discharge (ESD) sensitive marking. All paragraphs addressing handling or maintenance which could damage **ESD** sensitive parts shall be marked with the acronym **ESD** as shown below. The acronym shall be prepared in boldface type and in the same style and size as the adjacent text. The acronym shall not be shown with the titles in the table of contents. Use of the acronym is as follows,

a. When the entire task and all subordinate paragraphs and steps relate to ESD sensitive parts, the acronym ESD shall precede the task title. (For example, **ESD** DISASSEMBLY.)

b. When the entire task and subordinate paragraphs and steps are not directly related to **ESD** sensitive parts, only those which do apply shall be annotated with the acronym **ESD**. For example,

REMOVAL

1. _____
2. **ESD** _____

c. Handling or maintenance actions which could damage **ESD** sensitive parts, but which are not directly related to handling or maintenance of **ESD** sensitive parts, shall not be annotated with the acronym **ESD**, but shall be preceded by a caution.

d. Mark figures, drawings, and schematics with the **ESD** acronym in accordance with MIL-STD-1686.

4.7.21 Quality Assurance (QA). Depot and aviation maintenance procedures, which have a major quality assurance effect, shall be identified by the symbol **"QA"** in boldface letters preceding the text. Only procedures at the step level shall be labeled with **QA**. For example,

1. **QA**

4.7.22 Security classification, emergency page and protective markings.

4.7.22.1 Security classification markings. When specified by the acquiring activity, a classified TM shall be prepared. The security classification markings for classified TMs, titles of parts, chapters, work packages, appendixes, paragraphs, illustrations, tables, and their contents, shall be identified in accordance with DOD 5200.1-R and DOD 5220.22-M, and Executive Order 12958. For guidance on classification and handling restrictive markings on Compact Disk-Read Only Memory (CD-ROM), refer to MIL-HDBK-9660. Downgrading/declassification shall be done in accordance with DOD 5200.1-R. Additional instructions applicable to security classification markings are described in 4.7.22.2 through 4.7.22.6.

4.7.22.2 Overall security classification. The overall security classification assigned to a TM shall agree with the highest security classification assigned to any portion within, and shall be marked accordingly at the top and bottom of the front cover, title block page, and rear cover sheets. The security classification markings for pages, including those for unclassified pages, shall be bold and at the top and bottom center of each page (refer to FIGURE 7).

Source: https://assist.dla.mil -- Downloaded: 2016-12-09T23:32Z
Check the source to verify that this is the current version before use.

4.7.22.3 Blank page backing a classified page. Blank pages normally require no copy. However, if the reverse side of a blank page contains classified material, security markings for the blank page shall be bold and at the top and bottom center of the blank page. The blank page shall reflect the highest classification of the reverse side, and include the statement “This page is unclassified”.

4.7.22.4 Emergency page markings. When specified by the acquiring activity, emergency pages shall be prepared. Pages containing emergency information shall have a dark border that indicates to the user that they are emergency pages. The border should go to the edge of the page, if the composition system allows it, and should be made up of characters such as large Xs, large asterisks, or large slashes. Refer to FIGURE 8 for examples of emergency page markings.

4.7.22.5 Protective markings. When specified by the acquiring activity, a FOR OFFICIAL USE ONLY (FOUO) protectively marked manual shall be prepared. Refer to DOD 5400-7R for protective markings (FOUO).

4.7.22.6 COMSEC protective markings. Unless requirement is specifically excluded by the acquiring activity, Army Communications Security (COMSEC) Equipment Manuals shall contain the protective marking “FOR OFFICIAL USE ONLY”.

4.7.23 Referencing.

4.7.23.1 Other documents. Reference shall be made only to other documents available and authorized to the user. Reference shall be to the publication number. References to pending publication actions shall not be made.

4.7.23.2 Government specifications and standards. Reference shall be made to the basic number for Government specifications and standards.

4.7.23.3 Referencing within the TM. Reference within a work package shall be to the appropriate maintenance task title, procedure title, step number, figure number or table number, etc. References to other work packages shall include the work package sequence number in the reference. The work package sequence number shall appear prior to the references title or number.

4.7.23.3.1 TM divisions. References to any major division of the manual shall be made by name (i.e. Volume 5, Chapter 6, Table of Contents, Glossary, Index, etc.) or by abbreviation (i.e. Vol 5, Chap 6, TOC, etc.).

4.7.23.3.2 Volumes. References to information in another volume within the TM shall include the volume number.

4.7.23.3.3 Work packages. References to work packages within the same TM shall be to the work package sequence number (i.e., WP 0125, etc.).

4.7.23.3.4 Maintenance tasks, procedures, and paragraphs. Reference to maintenance tasks, procedures, and paragraphs shall be by work package sequence number and reference to title, as necessary (i.e., WP 0025, Disassembly or WP 0012, Equipment Data).

4.7.23.3.5 Tables. Reference shall be made to tables within a work package by table number (for example, Table 2). Reference shall be made to tables in a different work package by work package sequence number and table number (for example, WP 0012, Table 2). Reference shall be made only to tables within the same manual or another volume of the same manual.

Source: https://assist.dla.mil -- Downloaded: 2016-12-09T23:32Z
Check the source to verify that this is the current version before use.

4.7.23.3.6 Footnotes. Reference shall be made to footnotes when essential for reference, explanation, comments, or other information. Testing procedures shall not contain footnotes.

4.7.23.3.7 Figures and multisheet figures. Reference shall be made to figures within a work package by figure number (for example, Figure 2) and the sheet number for multisheet illustrations, when applicable (for example, Figure 17, Sheet 1). Reference shall be made to figures in a different work package by work package sequence number and figure number (for example, WP 0012, Figure 2). References shall be made only to figures within the same manual or another volume of the same manual.

4.7.23.3.8 Index numbers. Reference shall be made to a figure number followed by the index number; for example, (Figure 6, Item 34).

4.7.23.3.9 Items on diagrams. Reference shall be made to parts on diagrams by enough of their description or reference designator to identify the item (for example, resistor A6R11).

4.7.23.4 Repeating information. Repeating information shall be allowed to ensure the work package information is complete. Information, two pages or less may be repeated; information more than two pages shall be referenced.

4.7.23.5 Equipment, components, and parts. Reference to parts of the equipment and to equipment components may be by nomenclature, model, type, reference designator, and figure and item number, as applicable. Reference shall be made only to models or types of equipment covered by the manual. To facilitate coverage of modified or additional models or types at a later date, references shall be held to a minimum.

4.7.23.6 National Stock Numbers (NSNs) and Part Numbers (P/Ns). Reference to NSNs shall be made only in tables, other tabular material, and lists. Reference to NSNs shall not be made on illustrations or in illustration legends. Reference to P/Ns shall not be made in the narrative portions of the TM, procedural steps, illustrations, or legends, except when essential for identification. Reference to P/Ns may be made in tables, other tabular material, and lists.

4.7.23.7 Equipment panel markings (placarding). Reference shall be made to panel markings and switch positions exactly as marked on the equipment. However, symbols on panel markings shall be spelled out when they cannot be produced by the software, composing equipment, or printers used in producing the manual, such as the symbol for ohm, infinity, etc.

4.7.23.8 Metric and U.S standard measurements. Unless specified otherwise by the acquiring activity, all measurements shall be expressed in both U.S. standard units (e.g., ounces, pounds, gallons, inches, feet, knots, miles, etc.) and metric units. U.S. standard measurements shall be followed by the metric conversion in parentheses unless the equipment, instrument, or tool, etc., is calibrated in metric units. In that case, metric units shall be first, followed by the U.S. standard units. (For example, “169.5 Nm (125 lb-ft)”.)

4.7.23.9 Temperature. Reference shall be made to temperature readings as calibrated on the equipment. If other than Fahrenheit, the equivalent in Fahrenheit shall follow in parentheses. General temperature references, such as room temperature, shall be given in degrees Fahrenheit (for example, 78°F).

4.7.24 Equations. The use of equations shall be held to the minimum use required by the needs of the TM user.

Source: https://assist.dla.mil -- Downloaded: 2016-12-09T23:32Z
Check the source to verify that this is the current version before use.

4.7.25 Nomenclature.

4.7.25.1 Nomenclature consistency and applicability. Nomenclature, other terms, and names shall be consistent within a manual and throughout the RPSTL, MAC, and other directly related manuals. Statements that explain applicability for individual items of equipment shall use specific serial numbers, block designations, model designations, or similar identification. Such terms as “on later equipment” and “on early serial numbers” shall not be used.

4.7.25.2 Official/approved nomenclature. Unless specified otherwise by the acquiring activity, only approved names and official nomenclature shall be used. (Official nomenclature shall be the nomenclature used in the RPSTL.) If unofficial nomenclature (common name) is approved, an appropriate nomenclature cross-reference list shall be prepared for the TM (refer to Appendix B). Shortened versions of the approved nomenclature are not considered deviations. Approved nomenclature shall be used wherever the use of a common name might be ambiguous.

4.7.25.3 Military terms. Military terms used shall be in accordance with Joint Pub 1-02, or any approved dictionary or glossary of Army military terms.

4.7.25.4 Automatic electronic test and checkout terminology. Terms used for automatic electronic test and checkout shall be in accordance with MIL-STD-1309.

4.7.26 Comprehensibility. Technical manuals shall be written for the target audience. Reading grade level (RGL) shall be as specified by the acquiring activity. Refer to MIL-HDBK-1222 for guidance on calculating the RGL for TMs.

4.7.27 Graphics.

4.7.27.1 Graphic format. Graphics format shall be as specified by the acquiring activity in accordance with AR 25-30. A list of preferred formats is in MIL-HDBK-1222.

4.7.27.2 Types of graphics. As applicable, the following types of graphics shall be used in the preparation of TMs. Preferred format of these graphics and typical examples are provided in MIL-HDBK-1222.

a. Line drawings.
b. Photographs.
c. Engineering drawings.
d. Diagrams.
e. Charts and graphs.
f. Tools and test equipment illustrations.

4.7.27.2.1 Line drawings. Line drawings including exploded views, locator views, and detailed views shall be used to support the operational and maintenance procedures, and the RPSTLs. Examples of line drawings are provided in MIL-HDBK-1222.

a. When index numbers are used to locate and identify equipment components or parts, the index numbers shall be assigned in clockwise sequence (beginning at 11 o’clock except for PMCS procedures). See MIL-HDBK-1222 for example of callouts starting at 11 o'clock.
b. To assist the maintenance technician or operator in locating major components, controls and indicators, etc., locator views may be included.

Source: https://assist.dla.mil -- Downloaded: 2016-12-09T23:32Z
Check the source to verify that this is the current version before use.

c. When the illustration does not adequately or clearly depict the subject matter or part(s), specific detailed views may be included to support the main illustration.

4.7.27.2.2 Multiview and multisheet illustrations. Multiview and multisheet illustrations may be used to clarify, identify significant features, or further detail equipment assemblies, subassemblies, and detailed parts. Refer to MIL-HDBK-1222 for examples of multiview and multisheet illustrations.

4.7.27.2.3 Photographs. Photographs, film or digital, may be used for illustrations. All photographs, regardless of source, shall be delivered as digital photographs. The acquiring activity shall determine acceptability of photographs and usage of line drawings.

4.7.27.2.3.1 Photograph quality. If used, photographs shall be detailed and sharp, free of heavy shadows, distorted objects, cluttered foregrounds and backgrounds, and of good contrast. Photographs shall provide sufficient detail for the user to clearly identify all components.

4.7.27.2.3.2 Retouching. Photographic retouching shall be held to a minimum. Retouching shall be used only to emphasize detail, exclude unwanted detail, correct slight photographic defects and eliminate undesirable shadow from that portion of the photograph related to the text only.

4.7.27.2.3.3 Use of photographs in place of line drawings. For photographs that cannot meet the requirements specified above, line drawings shall be prepared.

4.7.27.2.4 Engineering drawings. Engineering drawings may be used with the approval of the acquiring activity. Engineering drawings are controlled documents and when used, they shall be used in their entirety, without modification. They must be reduced or redrawn to meet page size restrictions. When the controlled elements of an engineering drawing (i.e., title block, sources of supply, revision data, etc.) are removed, leaving only the “field” of the drawing, it is treated as a typical line drawing.

4.7.27.2.5 Diagrams.

4.7.27.2.5.1 Diagram specifications. Diagrams shall be prepared in accordance with the specifications listed below.

Subject	Equipment Covered	Specification
Abbreviations	All	ASME Y14.38
Engineering Drawing	All	ASME Y14.100
Graphic Symbols	Electrical and Electronic	IEEE 315A-1986, IEEE 280-1985
	Mechanical	ASTM-F856
	Digital (Logic)	IEEE 91-1991
	Fluid Power	ANSI Y32.10
Unit Symbols	All	IEEE 260.1-2004
Logic	All	IEEE 91-1991

4.7.27.2.5.2 Types of diagrams. The following types of diagrams may be included in the TM. Refer to MIL-HDBK-1222 for examples of types of diagrams.

a. Block diagrams.

b. Schematic diagrams.

c. Pictorial diagrams.

Source: https://assist.dla.mil -- Downloaded: 2016-12-09T23:32Z
Check the source to verify that this is the current version before use.

d. Cutaway diagrams.
e. Digital diagrams.
f. Wiring diagrams/wire lists.
g. Cable diagrams.
h. Piping diagrams.
i. Test setup diagrams.

4.7.27.2.6 Charts and graphs. Charts and graphs shall be prepared as illustrations. Instructions shall be provided for use and interpretation of complex graphs.

4.7.27.2.7 Tools and test equipment illustrations. Only uncommon or unusual uses and connections for test purposes shall be illustrated if it is essential to do so to avoid misunderstanding. Unusual operations shall also be illustrated. Special tools and test equipment shall be illustrated, as applicable. Standard tools and test equipment shall not be illustrated, nor shall self-evident or generally known uses be shown.

4.7.27.3 Elements of illustrations.

4.7.27.3.1 Border rules and boxes. Border rules and boxes shall not be used for single illustrations, but are used to separate multi-section illustrations on the same page or for locator/detail views. Refer to MIL-HDBK-1222 for an example of border rules and boxes.

4.7.27.3.2 Use of the human figure. When necessary, illustrations may include a human figure or parts of the body. Jewelry shall not appear in any illustration. The human figure shall not be permitted to obscure details of the equipment necessary for a complete understanding of its operation. The human figure shall be clothed as designated by the acquiring activity. A cross section of races and sexes shall be used.

4.7.27.3.3 Credit lines.

a. The photographer's or illustrator's name shall not appear on any illustration.
b. A manufacturer's name, symbol, or trademark shall not appear on illustrations for the purpose of identifying the illustration.

4.7.27.3.4 Callouts. Index numbers, reference designators, nomenclature, leader lines, sweep arrows, legends, and other identifiers shall be used, when necessary, to identify significant features. Both index numbers and nomenclature can be used in the same document. However, they shall not be used together in the same illustration. Refer to MIL-HDBK-1222 for examples of the use of these types of identifiers.

4.7.27.3.4.1 Index numbers. Index numbers shall start with Arabic numeral 1 and continue consecutively within an illustration. For multisheet illustrations, index numbers shall continue in sequence from one sheet to another.

a. Index numbers shall be in clockwise sequence (beginning at 11 o'clock except for PMCS procedures). See MIL-HDBK-1222, Figure 15 for example of calouts beginning at 11 o'clock.
b. Within a multisheet illustration, if an item that already has been assigned an index number is used in more than one illustration in that multisheet illustration, it shall retain the same index number.

Source: https://assist.dla.mil -- Downloaded: 2016-12-09T23:32Z
Check the source to verify that this is the current version before use.

c. All items shown as exploded shall be identified. Items drawn in phantom need not be identified.

d. Index numbers shall not be contained within circles.

4.7.27.3.4.2 Leader lines and arrowheads. Leader lines shall be uniform, short, and as straight as possible; avoid the use of dogleg-shaped lines unless absolutely necessary. Arrowheads may be added for clarity. Do not allow leader lines to touch the callout. Do not allow arrowheads to enter the object to which they apply. If it is necessary to enter the object to provide for greater clarity, a breakoff symbol shall be used in lieu of an arrowhead.

4.7.27.3.5 Illustration legends. When necessary for clarity, legends shall be prepared to identify index numbers on illustrations. Legends shall be a part of the illustration and shall not be placed in the text area. Examples of legends are provided in MIL-HDBK-1222.

4.7.27.3.6 Procedures on illustrations. Procedural steps shall not be placed on illustrations.

4.7.27.4 Graphic techniques. In addition to the graphic techniques provided in 4.7.27.4.1 through 4.7.27.4.8, refer to MIL-HDBK-1222 for suggested graphic techniques used for the preparation of TMs.

4.7.27.4.1 Figure numbers. Figure numbers shall be included on all illustrations except inline graphics (example equation). Figures shall be numbered using Arabic numbers sequentially within each work package starting with the Arabic numeral 1. The figure number shall precede the title. The figure number and title shall not be an integral part of the figure. The figure number and title shall be separated from the graphic so the text can have the capability of being searched.

4.7.27.4.2 RPSTL figure numbering. Figures for RPSTL shall be numbered sequentially within the RPSTL (not within each work package) using Arabic numerals beginning with 1. Multisheet RPSTL illustration shall be used as specified by the acquiring activity and shall be numbered as described in previously in the this paragraph and 4.7.27.4.4.

4.7.27.4.3 Foldout figure numbering. Foldout figures shall be numbered in consecutive ascending numerical sequence within each TM, beginning with Arabic number 1 (e.g. FO-1, FO-2, etc.). Figures are numbered in the order of reference in the text. Figure numbers for foldouts shall be placed preceding the figure title under the illustration.

4.7.27.4.4 Multisheet numbering. Multisheet figures shall be consecutively sheet numbered and the total number of sheets following the title; for example, “Figure 2. Wing Hydraulic Assembly (Sheet 1 of 3).” or “Figure 1. Cable Assembly W12 Wiring Diagram (Sheet 1 of 2).” Remaining sheets shall be numbered in consecutive order, Sheet 2 of x, Sheet 3 of x, etc. (where x is the total number of sheets). A sample multisheet illustration is provided in MIL-HDBK-1222.

4.7.27.4.5 Figure titles. Each figure, except with inline graphics, shall have a figure title.

4.7.27.4.5.1 Figure title format. The figure title format shall

a. Include “Figure” in title case, followed by the figure number, a period, two spaces, and the title. (For example, “Figure 3. Fuel Indicator.”)

b. Capitalize the first letter of the first and each major word of the title.

c. End with a period following the last word.

d. Identify illustrations applicable to one Service in a joint service TM. (For example, “Figure 3. Fuel Indicator (Army Only).”)

Source: https://assist.dla.mil -- Downloaded: 2016-12-09T23:32Z
Check the source to verify that this is the current version before use.

e. Identify illustrations applicable to more than one Service in a joint service TM. (For example, “Figure 3. Fuel Indicator (Army and Air Force Only).”)

4.7.27.4.5.2 Figure title placement. Figure title placement shall

a. Center the figure title on the graphic image area below the graphic
b. Begin the title on the same line with the figure number.
c. When too long to fit on one line, align the second line with the first letter of the title.

4.7.27.4.6 Illustration identification numbers. Each illustration shall be assigned a unique identification number provided by the proponent activity.

a. Contractor's identification number may be used when approved by the proponent activity.
b. When the identification number is to be printed in the TM, such number shall be approximately 4- to 6-point type and placed in the lower right-hand corner of the illustration (within the graphics area) sufficiently removed to avoid being confused as part of the illustration.

4.7.27.4.7 Portraying signal flow. Signal flow, especially for electrical and electronic equipment, critically affects the understandability of diagrams. To assist the TM user in following the diagram, where possible, major signal or pressure flow shall be from left to right, and feedback or return flow shall be from right to left.

4.7.27.4.8 Color in illustrations. Unless specified otherwise by the acquiring activity, black and shades of black (one color) shall be used for TMs. Prior approval for color will be obtained by the acquiring activity from the Army Publishing Directorate (APD). The acquiring activity will provide written approval, designating color(s) to be used.

4.8 Changes/Revisions. When updates to technical manuals are ordered the deliverable product shall be changed pages/work packages or a complete revision of the TM. The acquiring activity will determine the type of update required.

4.8.1 Changes for TMs. A change is used to incorporate appropriate new information (for example, MAC changes, Modification Work Orders (MWO), engineering drawing changes, DA Forms 2028, etc.) into the basic TM (or previous edition) or clarifies, corrects, or improves existing information in the TM. The change will be written in the same style and format as the basic manual.

4.8.1.1 Changes. Changes shall consist of a change transmittal page and the applicable change pages and/or work packages. For the content and format of a change transmittal page, refer to FIGURE 9.

a. Each change to a TM shall be numbered in sequence beginning with 1.
b. Front matter, work package, and rear matter change pages shall conform to the style and format of the basic TM and shall incorporate all approved information.
c. Changes to front and rear matter pages and all pages of a changed work package shall include the applicable change number located on the outer edge of the page opposite the binding side.
d. The PIN number shall be on the last page of the change package.

4.8.1.2 Changed work packages. When updates to a work package are made, the entire work package shall be revised and included in the TM change package.

Source: https://assist.dla.mil -- Downloaded: 2016-12-09T23:32Z
Check the source to verify that this is the current version before use.

4.8.1.3 Changed front and rear matter pages. When updates to the front and rear matter of a TM are required, all pages that share the same page number style (e.g., a-z or i-ix) shall be revised and reissued and included in the TM change package.

4.8.1.4 Change symbols for text and tables. Change symbols shall be inserted to identify technical updates in text and tables.

a. Updates to the text and tables shall be indicated by a vertical bar opposite the updated, deleted, or added text (except as noted below).
b. A change bar shall be placed to the left of the table title only if the table title is changed or a new table is added.
c. Change symbols from a previous revision shall be deleted when a page is subsequently updated. Symbols shall show current updates only.
d. Change symbols are not required for correction of minor inaccuracies, such as spelling, punctuation, relocation of material, renumbering, etc., unless such correction changes the meaning of the information.
e. If everything in the work package is changed, a vertical shall be placed to the left of the work package title in lieu of putting vertical bars next ot all of the text. Paragraphs whose number changed after adding or deleting material shall not be marked with a vertical bar and shall not be considered changed material.

4.8.1.5 Change symbols for illustrations. Unless specified otherwise by the acquiring activity, a miniature pointing hand may be used for illustrations (other than diagrams and schematics) to highlight the area containing the revised information.

a. Changes continued to the same general area shall be indicated only once on the illustration.
b. A vertical bar next to changed callouts on illustrations may be used in lieu of a pointing hand.
c. A vertical bar shall be placed next to graphic if the miniature pointing hand is not used.
d. As specified by the acquiring activity, screens (shading), screened (shaded) boxes, or miniature pointing hands should be used to highlight updated areas of diagrams and schematics.
e. If a callout is deleted from an illustration, the word “DELETED” may be placed after the appropriate number in the legend, if applicable. If a callout is deleted from an illustration without a legend, such as those used to supplement a RPSTL, the word “DELETED” may be placed on the illustration at the end of the leader line.
f. When an illustration is changed, index numbers added between existing numbers may be the same as the preceding index number with added alpha characters (e.g., 22A, 22B). This system may also be used in basic manuals when errors are discovered so late in preparation that renumbering of all following index numbers would delay submittal. Index numbers with added alpha characters shall be eliminated for a complete revision.
g. When an illustration contains embedded references (this practice is highly discouraged) to other illustrations or tables, the referenced table and illustration numbers shall not be changed. When an illustration or table, in the work package, is added or deleted prior to the referenced table or illustration the use of point illustration or table number is permitted and shall be in accordance with the LMI plan.

Source: https://assist.dla.mil -- Downloaded: 2016-12-09T23:32Z
Check the source to verify that this is the current version before use.

4.8.1.6 Changes to RPSTL work packages. Requirements shall apply with the following exceptions.

a. Inserted or deleted figures and items. When figures and items have been inserted or deleted, the cross-reference index work packages shall be changed as necessary.

b. Item changes. Unless specified otherwise by the acquiring activity, an asterisk shall be placed to the left of the item number column in the list adjacent to the line item indicating that an update has been made to the item and is reflected in the associated text, illustration, P/N index, or reference designator index.

c. Deleted work package. When a RPSTL work package is deleted, remaining RPSTL figure numbers shall not be changed to reflect the deleted work package and associated figure until the next revision.

d. Inserted work package. When a RPSTL work package is inserted before the last RPSTL work package, the RPSTL figure number shall have point figure numbers in accordance with the LMI plan (e.g. Insert between Figure 234 and Figure 235 would be Figure 234A). The remaining RPSTL figure numbers shall not be changed until the next revision.

4.8.2 Complete TM revisions. A complete revision requires rewrite and reorganization of the technical content of the data. All existing changes to the basic manual will be merged. All change dates and change symbols will be removed and, if necessary, all work packages will be assigned new WP sequence numbers in consecutive order. If point numbers were added to the WP sequence numbers for expansion during a previous change cycle, they should be recycled to the basic four digit WP sequence numbers. (i.e., if WP 0034.1 and WP 0034.2 were inserted between WP 0034 and WP 0035, WP 0034.1 should be renumbered 0035, WP 0034.2 should be renumbered 0036 and WP 0035 should be renumbered 0037). The total number of pages in the WP or other division (i.e., warning summary, TOC, etc.) is counted when determining the total number of pages in the proposed change and applying the following rules.

a. Bound publications. Bound publications shall be revised when a proposed change to a publication would alter 25 percent or more of its printed pages or would alter 50 percent or more of its printed paragraphs. If the publication is eight or fewer pages, it shall always be revised.

b. Loose-leaf publications. Loose-leaf publications, which have 32 or fewer printed pages including changes, shall be revised when a proposed change would replace 50 percent or more of those pages. Loose-leaf publications, which have more than 32 printed pages including changes, shall be revised when a proposed change would replace 75 percent or more of those pages.

5. DETAILED REQUIREMENTS.

5.1 Technical content preparation. Technical manual data developed in accordance with this standard shall be task oriented and fully consistent with the maintenance concepts derived from the baseline documents described below.

a. Logistic Management Information (LMI). The technical data and instructions developed by the requirements of Logistic Management Information and Department of Defense (DoD) Requirements for a Logistic Management Information (LMI), (including the maintenance allocation chart (MAC)) shall be used as the baseline to prepare TMs.

Source: https://assist.dla.mil -- Downloaded: 2016-12-09T23:32Z
Check the source to verify that this is the current version before use.

b. MAC. For equipment that does not have LMI data available, either a Preliminary Maintenance Allocation Chart (PMAC) or the MAC shall be used as the baseline to prepare TMs.

c. Additional source data. Available engineering drawings shall be used with the other required data. Sound engineering principles and techniques, available engineering analyses, service experience, performance data on the item and on similar items, and all other Reliability, Maintainability, Supportability (RMS) and Operational Availability (Ao) data available shall be used in the preparation of specific instructions.

5.2 Preparation of front and rear matter. Requirements for the preparation of front and rear matter necessary to supplement the technical content chapters and associated work packages in Appendix B through Appendix GI are provided in 5.2.1 and 5.2.2. Appendix A, Content Selection Matrixes, provides detailed assembly and content requirements for all TMs covering operation, maintenance, and parts information, at all maintenance levels through depot.

5.2.1 Front matter **<paper.frnt>**. As applicable, material preceding the first text page shall consist of the following in the order specified below.

a. Front cover <**frntcover**>.

b. (MC) Promulgation letter **<promulgation>**.

c. Warning summary <**warnsum**>.

d. Change transmittal page <**chgsheet**>, if applicable.

e. List of effective pages/work packages <**loepwp**>.

f. Title block page <**titleblk**>.

g. Table of contents <**contents**>.

h. "How To Use This Manual" information <**howtouse>**.

5.2.1.1 Front cover **<frntcover>**. A front cover shall be prepared for each TM and DMWR/NMWR. The formats of the front covers are shown in FIGURE 10 (TM), FIGURE 11 (Phased Maintenance and Preventive Maintenance Services TMs), FIGURE 12 and FIGURE 13 (DMWR), FIGURE 14 (NMWR), and FIGURE 25 (TM with NMP overhaul standards). National Stock Number (NSN) and End Item Code (EIC) shall be included on the front cover of equipment publications but may not be required for general equipment and other types of publications. Unless otherwise specified the front cover shall contain the following content information in the order listed. Additional detailed requirements for the front cover content information are described in 5.2.1.1.1 through 5.2.1.1.13.

a. Security classification (when required).

b. TM number single service <**tmno**> or joint service <**tminfono**>.

c. National Overhaul Standard Statement (DMWRs/NMWRs/TMs with NMP Overhaul Standards Only).

d. TM title <**prtitle**>.

e. National stock number (NSN) <**nsn**> for item(s) covered (when required).

f. End Item Code (EIC) <**eic**>, as specified in the Army Master Data File (AMDF) (when required).

g. Subtitle (when required) <**stitle**>.

Source: https://assist.dla.mil -- Downloaded: 2016-12-09T23:32Z
Check the source to verify that this is the current version before use.

h. Weapon system name (when required) <**weaponsystem**>.
i. Equipment illustration (when required) <**graphic**>.
j. Availability statement <**avail**> (**DMWR/NMWR only**).
k. Supersedure notice (for revisions only) <**super**>.
l. Disclosure notice (when required) <**disclos**>.
m. Distribution statement <**dist**>.
n. Export control notice warning (when required) <**export**>.
o. Destruction notice (when required) <**destr**>.
p. General purpose notices (when required) <**general_purpose_notice**>.
q. Service nomenclature <**servnomen**>.
r. TM Publication <**date**>.

5.2.1.1.1 TM number for joint service TMs **<tminfono>**. If the manual is jointly used, each Service's number shall be placed on the front cover, and title block page and only the proponent activity's TM number shall be placed on each page within the TM. The numbers shall be prefixed with the word Air Force, Army, Marine Corps, or Navy (NAVSEA or NAVAIR), as applicable. The acquiring activity's (proponent activity's) name **<servbranch>** and manual number **<tmno>** shall be placed first. The TM number(s) for the other Services shall be in alphabetical sequence following the acquiring activity's name and manual number. For example,

"ARMY	TM 11-1510-204-34
AIR FORCE	TO 21M-LGM30G-12
MARINE CORPS	TM 12345A-15/1
NAVY (NAVAIR)	AI-F18AA-WRM-070
NAVY (NAVSEA)	SE211-FA-MMA-010/SPS-10A"

5.2.1.1.2 National Overhaul Standards statement (NMWR/DMWR/TM with NMP Overhaul Standards Only). The following shall be added to the title of NMWRs/DMWRs/TMs which document national overhaul standards for the National Maintenance Program: "Containing National Overhaul standards for". See FIGURE 13, FIGURE 14, and FIGURE 25 for examples.

5.2.1.1.3 Weapon system name **<weapon-system>**. When required the name of the weapon system to which this publication applies shall be included.

5.2.1.1.4 Availability statement **(DMWR/NMWR only) <avail>**. For DMWRs/NMWRs only, the front cover shall contain the following availability statement:

> "This publication is not available through the St. Louis Media Distribution Division. This publication is available through (*insert the name and address of the proponent activity*)."

5.2.1.1.5 Supersedure notice for revisions only **<super>**. When an TM is revised, a supersedure notice shall be included and an asterisk (*) shall prefix the supersedure notice and the TM number (refer to FIGURE 11).

Source: https://assist.dla.mil -- Downloaded: 2016-12-09T23:32Z
Check the source to verify that this is the current version before use.

5.2.1.1.6 Disclosure notice <**disclos**>. Unless specified otherwise by the acquiring activity, the following disclosure notice shall be placed on the front cover of all classified and unclassified TMs, DMWRs, and NMWRs except those with distribution statement A.

> "This information is furnished upon the condition that it will not be released to another nation without the specific authority of the Department of the Army of the United States, that it will be used for military purposes only, that individual or corporate rights originating in the information, whether patented or not, will be respected, that the recipient will report promptly to the United States, any known or suspected compromise, and that the information will be provided substantially the same degree of security afforded it by the Department of Defense of the United States. Also, regardless of any other markings on the document, it will not be downgraded or declassified without written approval of the originating United States agency."

5.2.1.1.7 Distribution statement <**dist**>. All TMs, DMWRs and NMWRs shall have a distribution statement placed on the front cover for each manual or revision (refer to FIGURE 10). The appropriate distribution statement shall be provided by the acquiring activity as selected from DOD 5230.24.

5.2.1.1.8 Export Control Warning <**export**>. For those pubs with export controlled data, the following export control notice contained in DOD Directive 5230.24 shall be included:

> "**WARNING -** This document contains technical data whose export is restricted by the Arms Export Control Act (Title 22, U.S.C., Sec 2751, et. seq.) or the Export Administration Act of 1979, as amended, Title 50A, U.S.C., App. Violations of these export laws are subject to severe criminal penalties. Disseminate in accordance with provisions of DOD Directive 5230.25."

5.2.1.1.9 Destruction notice <**destr**>. All TMs marked with distribution statements "B", "C", "D", "E", "F", or "X" shall be marked with the destruction notice provided by the acquiring activity from DOD 5230.24 (refer to FIGURE 10).

5.2.1.1.10 General purpose notice <**general_purpose_notice**>. When specified by the acquiring activity, additional notice(s) may be included that are not addressed by the notices in 5.2.1.1.4 through 5.2.1.1.9. The notice shall have a title followed by the notice text.

5.2.1.1.11 Service nomenclature <**servnomen**>. All TMs shall include the service or acquiring activity's nomenclature.

5.2.1.1.12 TM Publication date <**date**>. The TM publication date shall be the official publication date assigned by the acquiring activity. If the publication is produced in more than one media, the date must be the same on all media (refer to FIGURE 10).

5.2.1.1.13 For Army communications security (COMSEC) manuals use. Unless otherwise specified by the acquiring activity, unclassified COMSEC TMs shall contain the notice "FOR OFFICIAL USE ONLY". The notice shall be placed at the bottom center of the front cover and all TM pages. Classified COMSEC TMs shall be appropriately marked at the level of classification.

5.2.1.2 (MC) Promulgation letter <**promulgation**>. A promulgation letter provided by the acquiring activity shall be included.

Source: https://assist.dla.mil -- Downloaded: 2016-12-09T23:32Z
Check the source to verify that this is the current version before use.

5.2.1.3 Warning summary (including first aid data) **<warnsum>**. When required, a warning summary shall be prepared for all TMs containing warnings. The warning summary shall appear on the first right-hand page immediately after the front cover. The warning summary shall include first aid data <**first_aid**>, explanations of all general safety warning icons and hazardous materials icons <**haz-icons**> used in the manual. It shall also include descriptions of the general safety warnings <**warninfo**> and hazardous materials warnings <**hazard**> that have major impact throughout the manual. Only warnings that meet this criteria shall be included. Refer to MIL-HDBK-1222 for a typical example of a warning summary. As applicable the warning summary shall consist of the following in the order specified below:

a. First aid data <**first_aid**>
b. Warning icons <**safety**>
c. Warning description <**warning**>
d. Hazardous materials icons <**haz-icons**>
e. Hazardous materials descriptions <**hazard**>

5.2.1.3.1 First Aid **<first_aid>**. First aid data shall be included in warning summary. The first paragraph shall reference FM 4-25.11, First Aid. Any additional first aid data not described in FM 4-25.11 shall be described in this section.

5.2.1.4 Change transmittal page **<chgsheet>**. A change transmittal page shall be prepared for each change to a TM and shall be included in the change package (refer to FIGURE 9). The change transmittal page shall not be numbered and shall be located following the warning summary (refer to FIGURE 9). The change transmittal sheet shall list all pages/work packages that have been changed, added, deleted, or superseded. When updates are prepared, the change number and date shall be shown on the change transmittal page. Unless specified otherwise by the acquiring activity, the change date shall be the date at which the material to be included was received (copy freeze date, provided by the acquiring activity). For changes prepared to support maintenance transformation, the following statement shall be included verbatim on the change transmittal page (refer to FIGURE 26):

"This change implements Army Maintenance Transformation and changes the Maintenance Allocation Chart (MAC) to support field and sustainment maintenance."

5.2.1.5 List of effective pages/work packages **<loepwp>**. A list of effective pages/work packages (refer to FIGURE 15 through FIGURE 18) shall be prepared as in accordance with 5.2.1.5.1 through 5.2.1.5.11. The list of effective pages/work packages shall be prepared and transmitted with the basic version of the TM and each subsequent change or revision. The list of effective pages/work packages shall immediately follow the warning summary. When included in a change, it shall immediately follow the change transmittal sheet if the warning summary is not included in the change.

5.2.1.5.1 Types of publications. The following types of publications shall have a list of effective pages/work packages:

a. Technical Manuals (TMs).
b. Repair Parts and Special Tools Lists (RPSTLs).
c. Depot Maintenance Work Requirements (DMWRs).
d. National Maintenance Work Requirement (NMWRs).

Source: https://assist.dla.mil -- Downloaded: 2016-12-09T23:32Z
Check the source to verify that this is the current version before use.

e. Preventive Maintenance Services (PMS) Manuals.
f. Preventive Maintenance Inspections (PMI) Manuals.
g. Aircraft Troubleshooting Manuals.
h. Technical Bulletins (TBs) (paper TBs with 8 or more pages only).

5.2.1.5.2 Exempted publications. The following types of publications shall not have a list of effective pages/work packages:

a. Pocketbook TMs.
b. TMs less than 8 pages.
c. Hand Receipt (-HR) manuals.

5.2.1.5.3 Types of pages to be included. The following types of pages shall be included in a list of effective pages/work packages:

a. All front matter pages to include cover, warning summary, title block, table of contents, and how-to-use this manual info.
b. Chapter title pages.
c. All WPs with their page counts (including blank pages). Blank pages shall not be listed separately on the list of effective pages.
d. Glossary pages.
e. Index pages.
f. Foldout pages.
g. Back cover.

5.2.1.5.4 Exempted pages. The following types of pages shall not be included in a list of effective pages/work packages:

a. Change transmittal page.
b. List of effective pages.
c. DA Forms 2028.
d. Authentication page.
e. Inside of front cover.

5.2.1.5.5 Change numbers. For new publications, the change number is always 0; the list of effective pages/work packages shall have all zeros. See FIGURE 16 for a sample of a new publication list of effective pages. When a change is prepared, the appropriate change number shall be placed in the change number column. See FIGURE 16 for a sample of a change publication list of effective pages. When a publication is revised, the change numbers shall all be changed back to zero. See FIGURE 17 for a sample of a revised publication list of effective pages/work packages.

5.2.1.5.6 Listing the pages. All pages in the book shall be listed except as noted in 5.2.1.5.4. List each work package by number and put the total number of pages in the work package in parentheses next to the WP number. The words “deleted”, “added”, or “blank” may be placed next to the page numbers when applicable. See FIGURE 16 for sample usage of these words.

Source: https://assist.dla.mil -- Downloaded: 2016-12-09T23:32Z
Check the source to verify that this is the current version before use.

5.2.1.5.7 Numbering the list of effective pages/work packages. The list of effective pages/work packages shall have a page number "A" for the first page and "B, C, D, etc." for additional pages.

5.2.1.5.8 List of effective pages/work packages for RPSTLS. A list of effective pages/work packages for a RPSTL shall be prepared similarly to other manuals. For RPSTLs prepared entirely in work package format, the work package numbers shall listed.

5.2.1.5.9 Multi-service manuals. For multi-service manuals, the abbreviation of the acquiring service (e.g., USA, USN, USMC, or USAF) shall be placed in the lower right-hand corner of the page. See FIGURE 18 for sample.

5.2.1.5.10 Multi-volume manuals. A list of effective pages/work packages covering all volumes shall be prepared and included in volume 1. Each volume number shall be listed followed by the pages in that volume. See FIGURE 18 for sample of an overall list of effective pages for a multi-volume manual that goes in part 1. Each volume, except volume 1, shall include a list of effective pages listing the pages provided in that particular volume.

5.2.1.5.11 Dates of Issue for changes. At the top of the list of effective pages/work packages, the date of the basic manual and the date of each change that appears in the change number column shall be listed.

5.2.1.6 Title block page **<titleblk>**. A title block page shall be prepared and follow the list of effective pages/work packages (Refer to FIGURE 19). The title block page shall include the reporting errors and recommended improvement statement <**reporting**>. When depot level repair parts are included in a lower level RPSTL, the following statement shall be added to the RPSTL title: "(Including Depot Maintenance Repair Parts)." When the publication contains National Overhaul Standards, the title block shall include the National Overhaul Standards Statement in accordance with 5.2.1.1.2. The title block page shall contain the same statements as shown on the front cover. RPSTL manuals and narrative manuals which include a RPSTL shall have a current as of date on the titleblock page.

5.2.1.6.1 Reporting errors and recommending improvements statement **<reporting>**. A reporting errors and recommending improvements statement (Refer to FIGURE 19) shall appear below the prime title, NSN, EIC, and subtitle (if any) on the title block page. The mailing address, e-mail address and fax number of the responsible proponent shall be inserted in the statement. Additional information may be added as required by the acquiring activity (e.g., how to submit an electronic 2028).

a. Unclassified/standard TM. Except for classified TMs, oversize TMs, pocket size TMs, and TMs with less than eight pages, the following statement shall precede the table of contents title.

Source: https://assist.dla.mil -- Downloaded: 2016-12-09T23:32Z
Check the source to verify that this is the current version before use.

(1) Army Only TM. The following statements shall be included:

"**REPORTING ERRORS AND RECOMMENDING IMPROVEMENTS**

You can help improve this manual. If you find any mistakes or if you know of a way to improve the procedures, please let us know. Mail your letter or DA Form 2028 (Recommended Changes to Publications and Blank Forms), located in the back of this manual directly to: (*name and address of proponent*). You may also send in your recommended changes via electronic mail or by fax. Our fax number is (*insert DSN and commercial number of proponent*). Our e-mail address is (*insert address of proponent*). A reply will be furnished to you."

(2) Marine Only TM. The following statements shall be included:

"**REPORTING ERRORS AND RECOMMENDING IMPROVEMENTS**

You can help improve this manual. If you find any mistakes or if you know of a way to improve the procedures, please let us know. Submit by NAVMC form 10772 directly to (*name and address of proponent*). You may also send in your recommended changes via electronic mail or by fax. Our fax number is (*insert DSN and commercial number of proponent*). Our e-mail address is (*insert address of proponent*). A reply will be furnished to you."

(3) Multi-Service TM. The following statements shall be included only for multi-service technical publication and use only applicable services (e.g., if the Navy does not use the publication, do not include a statement for that Service):

"**REPORTING ERRORS AND RECOMMENDING IMPROVEMENTS**

You can help improve this manual. If you find any mistakes or if you know of a way to improve the procedures, please let us know. Service, should be submitted as follows:

(a) (A) Army - Mail your letter or DA Form 2028 (Recommended Changes to Publications and Blank Forms), located in the back of this manual directly to: (*name and address of proponent*). You may also send in your recommended changes via electronic mail or by fax. Our fax number is (*insert DSN and commercial number of proponent*). Our e-mail address is (*insert address of proponent*).

(b) (MC) Marine Corps - By NAVMC form 10772 directly to (*name and address of proponent*). You may also send in your recommended changes via electronic mail or by fax. Our fax number is (*insert DSN and commercial number of proponent*). Our e-mail address is (*insert address of proponent*).

(c) (N) Navy - By letter directly to (*name and address of proponent*). You may also send in your recommended changes via electronic mail or by fax. Our fax number is (*insert DSN and commercial number of proponent*). Our e-mail address is (*insert address of proponent*).

Source: https://assist.dla.mil -- Downloaded: 2016-12-09T23:32Z
Check the source to verify that this is the current version before use.

(d) (F) Air Force - By Air Force AFTO Form 22 directly to (*name and address of proponent*). You may also send in your recommended changes via electronic mail or by fax. Our fax number is (*insert DSN and commercial number of proponent*). Our e-mail address is (*insert address of proponent*). A reply will be furnished to you."

b. Pocket size TMs, oversize TMs, and TMs with less than eight pages. For pocket-size TMs, oversize TMs, and TMs with less than eight pages, the following statement shall precede the table of contents title.

(1) Army Only TM. The following statements shall be included:

"**REPORTING ERRORS AND RECOMMENDING IMPROVEMENTS**

You can help improve this manual. If you find any mistakes or if you know of a way to improve the procedures, please let us know. Mail your letter or DA Form 2028 (*Recommended Changes to Publications and Blank Forms*) directly to: (*name and address of proponent*). You may also send in your recommended changes via electronic mail or by fax. Our fax number is (*insert DSN and commercial number of proponent*). Our e-mail address is (*insert address of proponent*). A reply will be furnished to you."

(2) Marine Only TM. The following statements shall be included:

"**REPORTING ERRORS AND RECOMMENDING IMPROVEMENTS**

You can help improve this manual. If you find any mistakes or if you know of a way to improve the procedures, please let us know. Submit by NAVMC form 10772 directly to (*name and address of proponent*). You may also send in your recommended changes via electronic mail or by fax. Our fax number is (*insert DSN and commercial number of proponent*). Our e-mail address is (*insert address of proponent*). A reply will be furnished to you."

(3) Multi-Service TM. The following statements shall be included only for multi-service technical publication and use only applicable services (e.g., if the Navy does not use the publication, do not include a statement for that Service):

"**REPORTING ERRORS AND RECOMMENDING IMPROVEMENTS**

You can help improve this manual. If you find any mistakes or if you know of a way to improve the procedures, please let us know. Reports, as applicable by the requiring Service, should be submitted as follows:

(a) (A) Army - Mail your letter or DA Form 2028 (*Recommended Changes to Publications and Blank Forms*) directly to: (*name and address of proponent*). You may also send in your recommended changes via electronic mail or by fax. Our fax number is (*insert DSN and commercial number of proponent*). Our e-mail address is (*insert address of proponent*).

(b) (MC) Marine Corps - By NAVMC form 10772 directly to (*name and address of proponent*). You may also send in your recommended changes via electronic mail or by fax. Our fax number is (*insert DSN and commercial number of proponent*). Our e-mail address is (*insert address of proponent*).

Source: https://assist.dla.mil -- Downloaded: 2016-12-09T23:32Z
Check the source to verify that this is the current version before use.

(c) (N) Navy - By letter directly to (*name and address of proponent*). You may also send in your recommended changes via electronic mail or by fax. Our fax number is (*insert DSN and commercial number of proponent*). Our e-mail address is (*insert address of proponent*).

(d) (F) Air Force - By Air Force AFTO Form 22 directly to (*name and address of proponent*). You may also send in your recommended changes via electronic mail or by fax. Our fax number is (*insert DSN and commercial number of proponent*). Our e-mail address is (*insert address of proponent*). A reply will be furnished to you."

c. Classified TMs. For classified TMs, the following statement shall precede the table of contents title:

(1) Army or Marine Only TM. The following statements shall be included:

"**REPORTING ERRORS AND RECOMMENDING IMPROVEMENTS**

You can help improve this manual. If you find any mistakes or if you know of a way to improve this manual, write and tell us about it. Address your correspondence to (*name and address of proponent*). When dealing with classified information, make sure that your correspondence is properly marked and is handled in accordance with current security regulations."

(2) Multi-Service TM. The following statements shall be included only for multi-service technical publication and use only applicable services (e.g., if the Navy does not use the publication, do not include a statement for that Service):

"**REPORTING ERRORS AND RECOMMENDING IMPROVEMENTS**

You can help improve this manual. If you find any mistakes or if you know of a way to improve this manual, write and tell us about it. Service, should be submitted as follows:

(a) Army - Address your correspondence to (*name and address of proponent*).

(b) (MC) Marine Corps - Address your correspondence to (*name and address of proponent*).

(c) (N) Navy - Address your correspondence to (*name and address of proponent*).

(d) (F) Air Force - Address your correspondence to (*name and address of proponent*).

When dealing with classified information, make sure that your correspondence is properly marked and is handled in accordance with current security regulations."

5.2.1.7 Preventive maintenance services and phased maintenance inspection manuals title block page with warning data **(Aviation only)**. For preventive maintenance services and phased maintenance inspection only, the warning data page shall include the reporting errors and recommending improvement statement and the following additional verbatim statement (refer to FIGURE 20).

Source: https://assist.dla.mil -- Downloaded: 2016-12-09T23:32Z
Check the source to verify that this is the current version before use.

"**WARNING**

Certain inspections are Mandatory Safety-of-Flight requirements, and the inspection intervals cannot be exceeded. In the event these inspections cannot be accomplished at the specified interval, the aircraft condition status symbol will be changed to a red X. Mandatory Safety-of-Flight inspection items are printed in bold face type.

NOTE

Inspection items contained in this manual are considered the minimum requirements for performing phased maintenance and must be performed. The cumulative effects of inspection deferrals are unknown and could result in catastrophic failure or increased maintenance at a later date. Therefore, the use of special lettering to emphasize Mandatory Safety-of-Flight Items is not to be construed as authority for deferral of other inspections."

5.2.1.8 Table of contents **<contents>**. A table of contents listing all chapters, work packages, figures, and tables shall be prepared for all TMs, DMWRs, and NMWRs. They shall have the exact same title and shall be listed in the same order they appear in the TM. Figures and tables shall be listed, in order as they appear, under the corresponding work package except for foldouts which shall be listed separately at the end of the table of contents. The how-to-use this manual information shall be listed on the table of contents including page number. The warning summary shall not be listed on the table of contents. The content and format of the table of contents is shown in FIGURE 21. The table of contents shall begin on the first available page following the title block page.

a. The security classification, if any, of chapters, work packages, figures, and tables shall be indicated.
b. Figures in the table of contents shall be listed under the corresponding work package by the figure number, title, and page number of each figure. A RPSTL TM shall not include figures in the table of contents. When a TM includes the parts information chapter, the listing of RPSTL figures is optional.
c. Tables in the table of contents shall be listed under the corresponding work package by the table number, title, and page number of each table.
d. Each volume of a multi-volume manual shall contain its own table of contents and shall reference companion volumes for the same TM. Volume 1 shall contain a complete table of contents covering the entire set. Entries shall indicate the volume in which the referenced material appears for example, Operator Instructions, Vol 1.
e. The following requirements are applicable to RPSTL entries (refer to FIGURE 22).
    (1) The RPSTL introduction work package **<introwp>** shall be the first work package listed in the parts information.
    (2) Titles of RPSTL work packages, including the Functional Group Codes (FGCs) as applicable, shall be listed by the same nomenclature and in the same sequence in which they appear in the first tabular listing in the work package. The WP sequence number shall be referenced with each WP title. The figure number may be included in the work package title.

Source: https://assist.dla.mil -- Downloaded: 2016-12-09T23:32Z
Check the source to verify that this is the current version before use.

(3) When multiple functional groups are under a single RPSTL work package, each functional group tabular list title may be included as a subordinate table of content entry.

(4) NSN, Part Number and (as applicable) reference designator cross-reference indexes shall be listed.

5.2.1.9 "How To Use This Manual" information **(Except RPSTLs and DMWRs/NMWRs) <howtouse>**. How-to-use this manual information shall be prepared for all TMs and shall include as applicable.

a. "How to Use This Manual" information shall be located after the table of contents and before the first chapter of the TM. "How to Use This Manual" information shall begin on the page immediately following the table of contents.

b. Information to familiarize the user with special or unusual features of the TM shall be prepared. Coverage shall lead the user through the TM and explain important features of the organization and content. For example, the format is explained; operating, troubleshooting, Preventive Maintenance Checks and Services (PMCS) are explained; and repair, maintenance instructions, and other pertinent information are explained.

c. Any peculiarities in the basic arrangement of the TM shall be described. "How To Use This Manual" information shall not repeat instructions given within the chapters and/or work packages.

d. For all TMs (excluding operators) the "How To Use This Manual" information shall include reference to the associated RPSTL and an explanation on how to use the RPSTL in conjunction with the manual.

e. For all TMs with a glossary, reference to the glossary shall be made and an explanation of its features and use shall be provided.

f. For Troubleshooting TMs, an explanation on how troubleshooting data is presented in the TM shall be included. The explanation shall explain how failure symptom indexes and malfunction codes correspond to maintenance operational checks and troubleshooting procedures for individual systems and components. If necessary, for multi-volume troubleshooting TMs, examples of the troubleshooting process shall be provided to illustrate how specific troubleshooting volumes and work packages are used together to locate and isolate faults.

5.2.1.9.1 International standardization agreements. When specified by the acquiring activity, the "How To Use This Manual" information shall contain the following.

"NOTE

Certain provisions of this technical manual (*identify by chapter, work package, paragraph, or similar manner, if appropriate*) are the subject of international standardization agreement (*insert the ABCA or ASCC standard number; the NATO, STANAG, NETR, or NEPR number; or appropriate documentary reference*). When revision or cancellation of this technical manual is proposed which will modify the international agreement concerned, the technical manual management activity will take appropriate action through international standardization channels, including departmental standardization offices, to change the agreement or make other appropriate accommodations."

Source: https://assist.dla.mil -- Downloaded: 2016-12-09T23:32Z
Check the source to verify that this is the current version before use.

5.2.2 Rear matter **<rear>**. As applicable, material following the last text page shall consist of the following:

a. Glossary (RPSTL not required) <**glossary**>.
b. Alphabetical index (when required) (RPSTL not required) <**aindx**>.
c. Reporting errors and recommending improvements DA Forms 2028 <**da2028**>.
d. Authentication page <**authent**>.
e. Foldout pages (when required) (RPSTL not required) <**foldsect**>.
f. Blank forms
g. Back cover **<back>**.

5.2.2.1 Glossary **(Except RPSTL) <glossary>**. A glossary shall be prepared for TMs only when the terms are uncommon and are not adequately defined in the text or in the Army, DoD, or standard dictionary. The glossary shall include a list of terms **<term>** followed by definitions **<def>**. The terms shall be listed in alphabetical order. If a glossary is required, it shall begin on a separate, right-hand page and immediately precede the alphabetical index, if any. Page numbers for a glossary shall begin with Glossary-1, Glossary-2, etc.

5.2.2.2 Alphabetical index **(Except RPSTL) <aindx>**. An alphabetical index shall be prepared unless specified otherwise by the acquiring activity.

a. The index may be an index of work packages only or it may be a detailed index, as applicable.
b. All applicable work package references for each entry shall be indicated, regardless of the type of index being prepared. Page references may be included in a detailed index.
c. The index shall be located at the end of the TM but shall precede the sample DA Form 2028. Indexes shall begin on a separate, right-hand page. Page numbers for an index shall begin with Index-1, Index-2, etc. (refer to FIGURE 23).

5.2.2.3 Reporting errors and recommending improvements DA Form 2028 **<da2028>**. One filled-out sample copy of DA Form 2028, provided by the acquiring activity, and a minimum of three blank DA Forms 2028 with the TM number, date, and title shall be included and shall precede the authentication page of every unclassified TM (except for oversize TMs, pocket-size TMs, and TMs with less than eight pages). The filled out sample shall include guidelines for completing the form.

5.2.2.4 Authentication page **<authent>**. The authentication page, provided by the acquiring activity, shall be the last printed text page of the TM or if there are foldout pages, the authentication page shall be the last printed text page prior to the foldout pages. For changes, the authentication block shall be included on the change transmittal sheet(s). The authentication block shall be placed after all of the other information on the change transmittal sheet(s). (Refer to FIGURE 24).

5.2.2.5 Foldout pages **(Except RPSTL) <foldsect>**. If foldout pages are approved by the acquiring activity, they shall be the last printed material in the manual or volume. Foldout pages shall not be included in a RPSTL.

5.2.2.6 Blank forms. Unless otherwise specified, inclusion of blank forms shall be in accordance with AR 25-30.

Source: https://assist.dla.mil -- Downloaded: 2016-12-09T23:32Z
Check the source to verify that this is the current version before use.

5.2.2.7 Back cover **<back>**. The outside back cover shall be blank, except for pocket-size TMs and classified TMs. For pocket-size TMs, the outside back cover shall include the TM number. For classified TMs, security classification markings shall be included on the back cover. When applicable, a metric conversion table, covering applicable units included in the TM, shall be placed on the inside back cover. The PIN number shall be placed in the lower right hand corner of the back cover.

6. NOTES.

(This section contains information of a general or explanatory nature that may be helpful, but is not mandatory.)

6.1 Intended use. MIL-STD-40051-2 prescribes requirements applicable to various types of technical manuals, and the revisions for these manuals.

6.2 Acquisition Requirements. Acquisition document should cite the following:

a. Title, number, and date of this standard.
b. Title, number, and date of MIL-HDBK-1222.
c. Title, number, and date of MIL-STD-2361 and MIL-HDBK-2361.
d. Filled out functionality and content selection matrixes.

6.3 Tailoring guidance. The acquiring activity should tailor any required options offered herein in accordance with Appendix A, Content Selection Matrixes.

6.4 Supersession Data. DELETED.

6.5 Subject term (key word) listing. The following terms are to be used to identify the MIL-STD-40051-2 documents during retrieval searches,

a. Additional authorization list (AAL)
b. Basic issue items (BII)
c. Basis of issue (BOI)
d. Continuous Acquisition Life-cycle Support (CALS) raster
e. Computer graphics metafile (CGM)
f. Components of end item (COEI)
g. Depot maintenance work requirement (DMWR)
h. Expendable and durable items list
i. Extensible Markup Language (XML)
j. Illustrations
k. Initial Graphics Exchange Specification (IGES)
l. Introductory information
m. Maintenance allocation chart (MAC)
n. Maintenance instructions
o. National Maintenance Work Requirements (NMWR)
p. Operator instructions
q. Quality assurance (QA)

Source: https://assist.dla.mil -- Downloaded: 2016-12-09T23:32Z
Check the source to verify that this is the current version before use.

r. Repair parts and special tools lists (RPSTL)
s. Security classification
t. Standard Generalized Markup Language (SGML)
u. Supporting information
v. Theory of operation
w. Troubleshooting procedures
x. Work package (WP)
y. Work package identification number

6.6 Change notations. The margins of this standard are marked with vertical lines to indicate modifications generated by this change. This was done as a convenience only and the Government assumes no liability whatsoever for any inaccuracies in these notations. Bidders and contractors are cautioned to evaluate the requirements of this document based on the entire content irrespective of the marginal notations.

Source: https://assist.dla.mil -- Downloaded: 2016-12-09T23:32Z
Check the source to verify that this is the current version before use.

TM X-XXX-XXXX-XX 0029

FIELD MAINTENANCE
24-VOLT CONNECTOR RECEPTACLE
ASSEMBLY, REPAIR, REASSEMBLY

INITIAL SETUP:

Tools and Special Tools

Pliers, diagonal cutting (WP 0060, Item 3)
Screwdriver, flat-tip $^{3}/_{16}$–inch (WP 0060, Item 43)
Soldering iron, gun type (WP 0060, Item 48)
Stripper, wire, hand (WP 0060, Item 55)

Materials/Parts

Alcohol, denatured (WP 0059, Item 2)
Bruce, acid swabbing (WP 0059, Item 4)
Flux, rosin (WP 0059, Item 8)

Materials/Parts (cont.)

Solder, non-acid (WP 0059, Item 17)

Personnel Required

One

References

WP 0023
WP 0030

Equipment Condition

24–volt connector receptacle removed (WP 0038)

DISASSEMBLY

NOTE

Tag wires to aid in installation (WP 0023). If circuit marker bands are missing or not readable, replace (WP 0038).

1. Unscrew and pull back bushing retaining nut (Figure 1, Item 1) from shell (Figure 1, Item 4).
2. Using screwdriver, pry off shell (Figure 1, Item 4) from busing (Figure 1, Item 2).
3. Using pliers, pull out 12 inserts (Figure 1, Item 3) from bushing (Figure 1, Item 2)

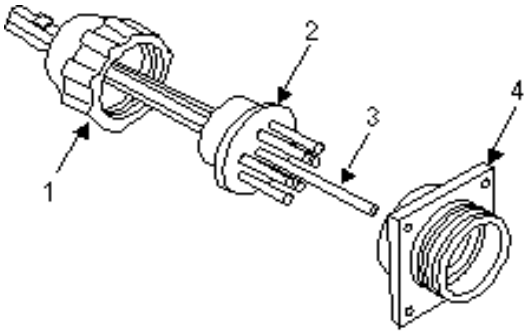

Figure 1. 24–Volt Connector Receptacle

END OF TASK

REPAIR

1. Using soldering iron, heat insert (Figure 2, Item 5) and pull from wires (Figure 2, Item 3).
2. Pull out 12 wires (Figure 2, Item 3).
3. Position wires in bushing (Figure 2, Item 2) according to chart (Figure 2, Item 1).
4. Push wires all the way through holes in bushing (Figure 2, Item 2).
5. Using wire stripper, strip insulation back $^{1}/_{4}$–inch.

0029-1

FIGURE 1. Example of a maintenance work package.

Source: https://assist.dla.mil -- Downloaded: 2016-12-09T23:32Z
Check the source to verify that this is the current version before use.

REPAIR –CONTINUED

6. Slip an insert (Figure 2 , Item 5) over each wire, and solder using non-acid solder and soldering iron.

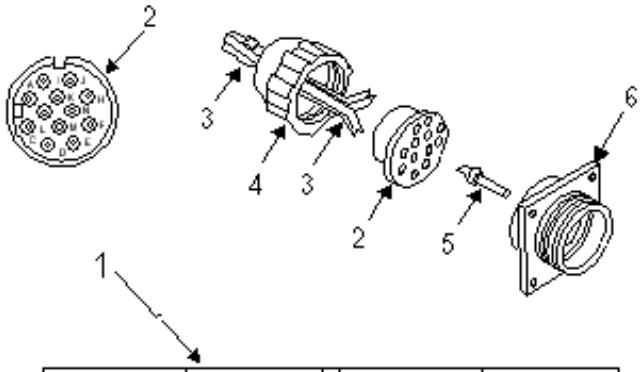

Terminal Designation	Circuit No.	Terminal Designation	Circuit No.
A	24 & 484	H	490
B	22 & 481	J	22 & 440
C	24 & 483	K	37
D	80	L	90
E	21 & 489	M	53
F	23	N	53

Figure 2. 24–Volt Connector Receptacle Wiring Diagram

END OF TASK

REASSEMBLY

NOTE

Make sure wire ends are clean before soldering. If necessary, clean with cleaning solvent and stiff fiber brush. Solder must be non-acid type; use rosin flux. Wires and soldering iron must be pre-tinned for good connection and maximum transfer of heat. After soldering, clean all solder joints with an acid swabbing brush and alcohol.

1. Push wires (Figure 2 , Item 3) and inserts (Figure 2 , Item 5) into bushing (Figure 2 , Item 2) until inserts (Figure 2 , Item 5) are seated.
2. Put bushing (Figure 2 , Item 2) in place within shell (Figure 2 , Item 6).
3. Screw on bushing retaining nut (Figure 2 , Item 4) to shell (Figure 2 , Item 7). Tighten busing retaining nut (Figure 2 , Item 4).
4. Install 24–volt connector receptacle (WP 0030).

END OF TASK

END OF WORK PACKAGE

FIGURE 1. Example of a maintenance work package. - continued

Source: https://assist.dla.mil -- Downloaded: 2016-12-09T23:32Z
Check the source to verify that this is the current version before use.

EAR PROTECTION - headphones over ears shows that noise level will harm ears.

ELECTRICAL - electrical wire to arm with electricity symbol running through human body shows that shock hazard is present.

ELECTRICAL - electrical wire to hand with electricity symbol running through hand shows that shock hazard is present.

FALLING PARTS - arrow bouncing off human shoulder and head shows that falling parts present a danger to life or limb.

FLYING PARTICLES - arrows bouncing off face shows that particles flying through the air will harm face.

FLYING PARTICLES - arrows bouncing off face with face shield shows that particles flying through the air will harm face.

HEAVY OBJECT - human figure stooping over heavy object shows physical injury potential from improper lifting technique.

FIGURE 2. <u>List of approved safety warning icons.</u>

Source: https://assist.dla.mil -- Downloaded: 2016-12-09T23:32Z
Check the source to verify that this is the current version before use.

HEAVY PARTS - hand with heavy object on top shows that heavy parts can crush and harm.

HEAVY PARTS - foot with heavy object on top shows that heavy parts can crush and harm.

HEAVY PARTS - heavy object on human figure shows that heavy parts present a danger to life or limb.

HEAVY PARTS - heavy object pinning human figure against wall shows that heavy, moving parts present a danger to life or limb.

HELMET PROTECTION - arrow bouncing off head with helmet shows that falling parts present a danger.

HOT AREA - hand over object radiating heat shows that part is hot and can burn.

LASER LIGHT - laser light hazard symbol indicates extreme danger for eyes from laser beams and reflections.

FIGURE 2. <u>List of approved safety warning icons.</u> - Continued.

Source: https://assist.dla.mil -- Downloaded: 2016-12-09T23:32Z
Check the source to verify that this is the current version before use.

MOVING PARTS - human figure with an arm caught between gears shows that the moving parts of the equipment present a danger to life or limb.

MOVING PARTS - hand with fingers caught between gears shows that the moving parts of the equipment present a danger to life or limb.

MOVING PARTS - hand with fingers caught between rollers shows that the moving parts of the equipment present a danger to life or limb.

SHARP OBJECT - pointed object in hand shows that a sharp object presents a danger to limb.

SHARP OBJECT - pointed object in hand shows that a sharp object presents a danger to limb.

SHARP OBJECT - pointed object in foot shows that a sharp object presents a danger to limb.

SLICK FLOOR - wavy line on floor with legs prone shows that slick floor presents a danger for falling.

FIGURE 2. <u>List of approved safety warning icons.</u> - Continued.

Source: https://assist.dla.mil -- Downloaded: 2016-12-09T23:32Z
Check the source to verify that this is the current version before use.

BIOLOGICAL - abstract symbol bug shows that a material may contain bacteria or viruses that present a danger to life or health.

CHEMICAL - drops of liquid on hand shows that the material will cause burns or irritation to human skin or tissue.

CRYOGENIC - hand in block of ice shows that the material is extremely cold and can injure human skin or tissue.

EXPLOSION - rapidly expanding symbol shows that the material may explode if subjected to high temperatures, sources of ignition or high pressure.

EYE PROTECTION - person with goggles shows that the material will injure the eyes.

FIRE - flame shows that a material may ignite and cause burns.

FIGURE 3. <u>List of approved hazardous materials warning icons.</u>

Source: https://assist.dla.mil -- Downloaded: 2016-12-09T23:32Z
Check the source to verify that this is the current version before use.

POISON - skull and crossbones shows that a material is poisonous or is a danger to life.

RADIATION - three circular wedges shows that the material emits radioactive energy and can injure human tissue.

VAPOR - human figure in a cloud shows that material vapors present a danger to life or health.

FIGURE 3. <u>List of approved hazardous materials warning icons.</u> - Continued.

Source: https://assist.dla.mil -- Downloaded: 2016-12-09T23:32Z
Check the source to verify that this is the current version before use.

CHAPTER 6

FIELD MAINTENANCE INSTRUCTIONS
FOR
155 MM, M109A6 HOWITZER

FIGURE 4. Example of a chapter title page.

Source: https://assist.dla.mil -- Downloaded: 2016-12-09T23:32Z
Check the source to verify that this is the current version before use.

FIELD MAINTENANCE
24-VOLT CONNECTOR RECEPTACLE REPAIR
DISASSEMBLY, REPAIR, REASSEMBLY
EFFECTIVITY NOTICE
Model A1
This WP supersedes 0018, dated 14 Jan 2001, which should be destroyed in accordance with applicable security, regulations.

0017-1

FIGURE 5. Example of a work package title block.

Source: https://assist.dla.mil -- Downloaded: 2016-12-09T23:32Z
Check the source to verify that this is the current version before use.

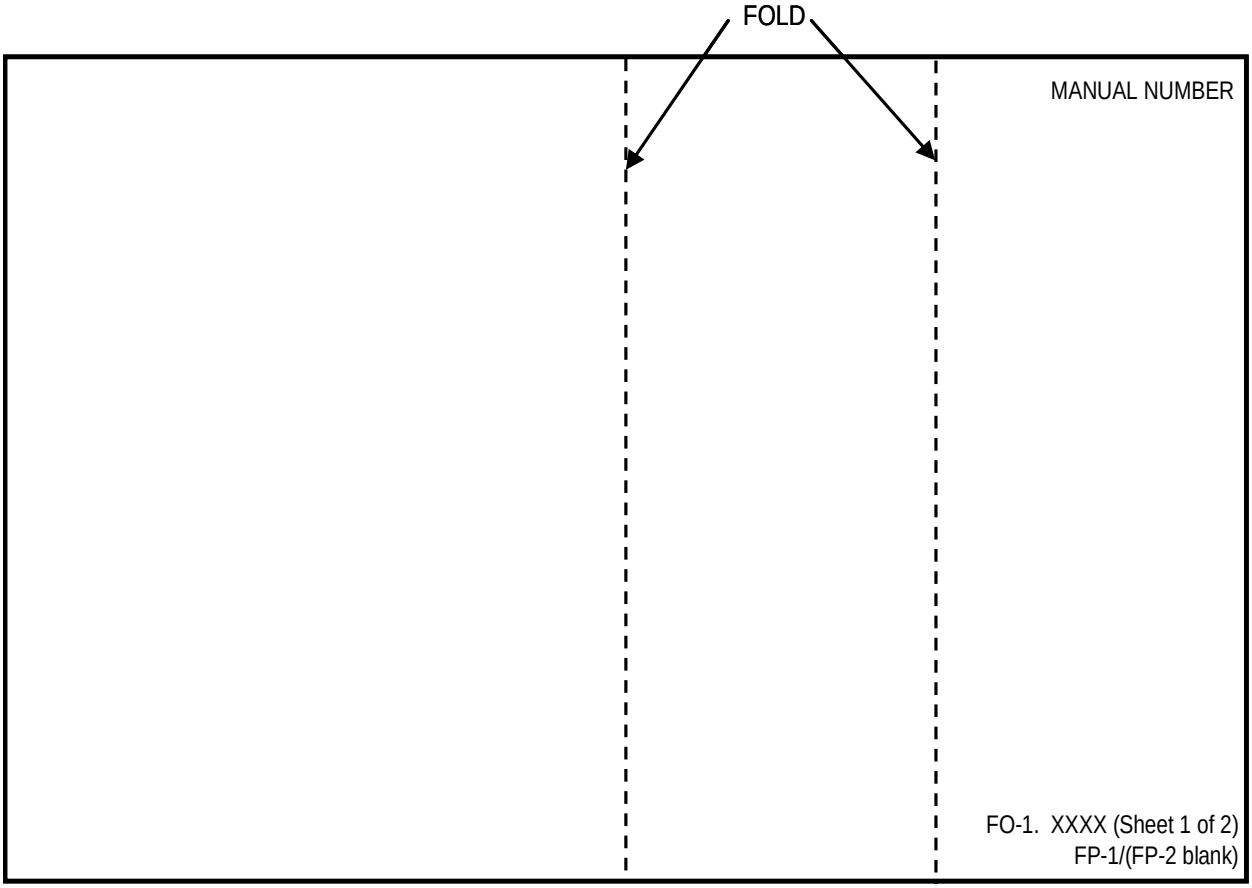

FIGURE 6. Example of a foldout page.

Source: https://assist.dla.mil -- Downloaded: 2016-12-09T23:32Z
Check the source to verify that this is the current version before use.

CONFIDENTIAL
(THIS PAGE IS UNCLASSIFIED)
TM NUMBER **0003**

OPERATOR MAINTENANCE

START ENGINE WITH OUTSIDE POWER SOURCE
OPERATION UNDER USUAL CONDITIONS

INITIAL SETUP:

Tools and Special Tools

Slave cable
24 volt power source or other vehicle

Personnel Required

Driver(2)

References

TM X-XXX-XXX-XX

Equipment Condition

Vehicle unable to start under own power
Operational vehicle engine stopped (WP 0021)

START ENGINE

WARNING

Using ether to start engine can result in engine explosion. Personnel can be injured or killed. Never use ether to assist starting an engine.

CAUTION

Battery or electrical damage can occur if electrical switches are left on. Turn off all electrical switches in both vehicles.

NOTE

Steps 1 – 8 should be done in both operational and disabled vehicles.

1. Check that master power switch is OFF.
2. Check that engine accessory switch is OFF.
3. Check that turret power switch is OFF. See TM X-XXX-XXX-XX.
4. Check that fire suppression switch is in manual.
5. Check that starter cutout override switch is OFF.
6. Check that fwd and rear bilge pumps switches are OFF.
7. Check that smoke screen generator switch is OFF.

0003-1
(THIS PAGE IS UNCLASSIFIED)
CONFIDENTIAL

FIGURE 7. Example of a page with security classification markings.

Source: https://assist.dla.mil -- Downloaded: 2016-12-09T23:32Z
Check the source to verify that this is the current version before use.

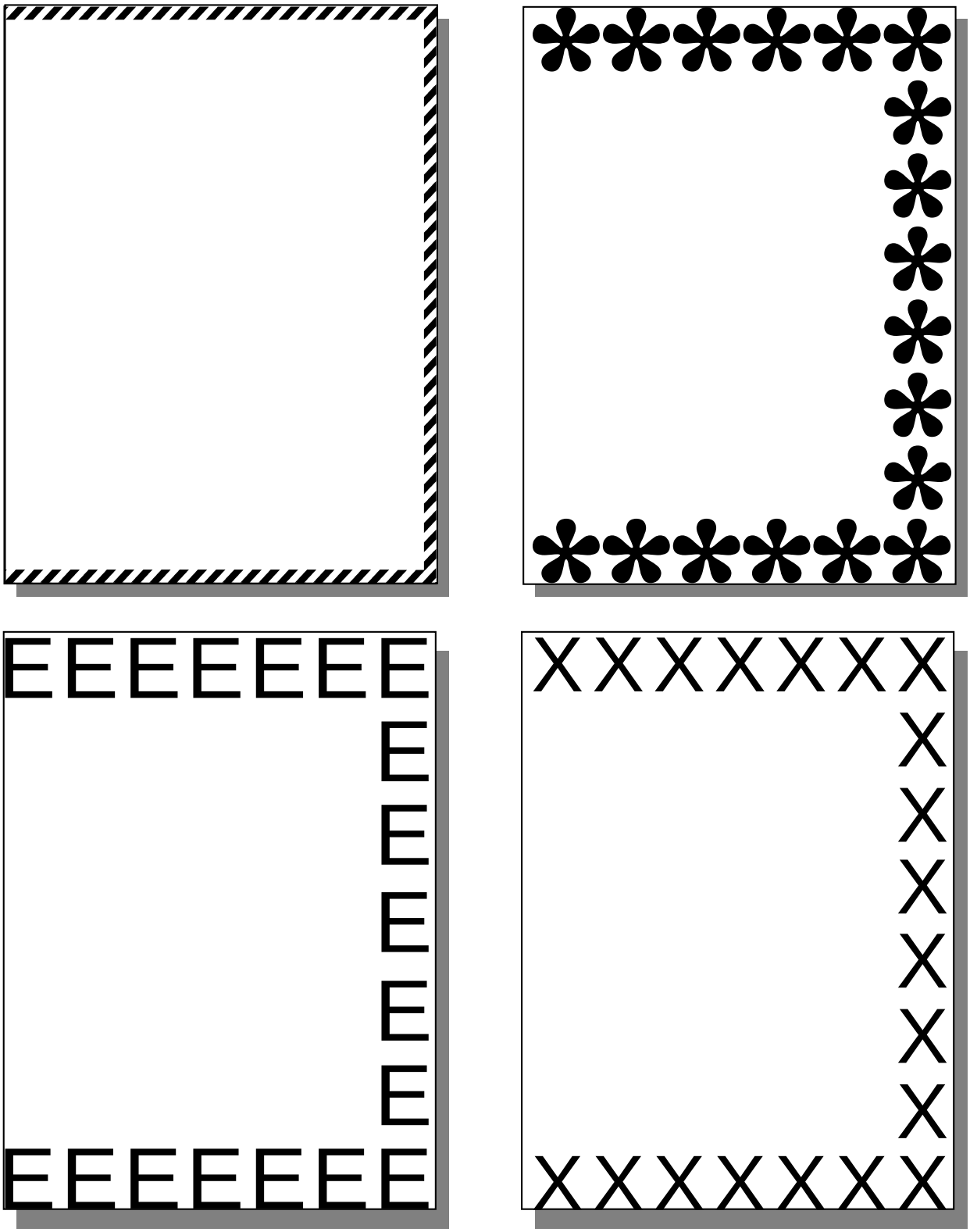

FIGURE 8. <u>Example of emergency page markings.</u>

Source: https://assist.dla.mil -- Downloaded: 2016-12-09T23:32Z
Check the source to verify that this is the current version before use.

MANUAL NUMBER

CHANGE NO. 1

**HEADQUARTERS,
DEPARTMENT OF THE ARMY
WASHINGTON, D.C., 31 AUGUST 1993**

TECHNICAL MANUAL

**OPERATOR'S MANUAL
FOR
TEST SET
RADAR AN/TPM-22
NSN 4931-00–707–1229 (EIC D42)**

DISTRIBUTION STATEMENT A. Approved for public release; distribution is unlimited.

TM X–XXX–XXXX–XX, 5 June 1987, is updated as follows:

1. File this sheet in front of the manual for reference.
2. This change is a result of new preventive maintenance checks and service procedures and new expendable/durable supplies and materials.
3. New or updated text is indicated by a vertical bar in the outer margin of the page.
4. Added illustrations are indicated by a vertical bar adjacent to the figure number. Changed illustrations are indicated by a miniature pointing hand adjacent to the updated area and a vertical bar adjacent to the figure number.
5. Remove old pages and insert new pages as indicated below:

Remove Pages	Insert Pages
a through d	a through d
None	e though g / h (blank)

6. Replace the following work packages with their revised version.

Work Package Number
WP 0154
WP 0042

7. Add the following new work packages.

Work Package Number
WP 1625.1
WP 1700.1

FIGURE 9. Example of a change transmittal page.

Source: https://assist.dla.mil -- Downloaded: 2016-12-09T23:32Z
Check the source to verify that this is the current version before use.

SECURITY CLASSIFICATION

TM NUMBER(S)

TYPE OF PUBLICATION
MAINTENANCE LEVELS
FOR

NOMENCLATURE OF EQUIPMENT
TYPE, MODEL, PART NUMBER
NATIONAL STOCK NUMBER (EIC)
OR
SUBJECT

SUBTITLE

WEAPON SYSTEM NAME

ILLUSTRATION

AVAILABILITY STATEMENT ,

SUPERSEDURE NOTICE *

DISCLOSURE NOTICE

DISTRIBUTION STATEMENT

WARNING

DESTRUCTION NOTICE

GENERAL NOTICE

SERVICE NOMENCLATURE

TM DATE

SECURITY CLASSIFICATION

FIGURE 10. Example of a TM front cover.

Source: https://assist.dla.mil -- Downloaded: 2016-12-09T23:32Z
Check the source to verify that this is the current version before use.

TM 3–6665–339–10

TECHNICAL MANUAL

OPERATOR'S MANUAL
FOR

NUCLEAR-BIOLOGICAL-CHEMICAL RECONNAISSANCE SYSTEM (NBCRS) FOX M93A1 (NSN 6665-01–372–1303) (EIC Y60)

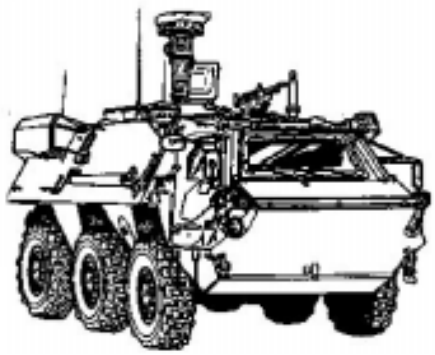

This information is furnished upon the condition that it will not be released to another nation without the specific authority of the Department of the Army of the United States, that it will be used for military purposes only, that individual or corporate rights originating in the information, whether patented or not, will be respected, that the recipient will report promptly to the United States, any known or suspected compromise, and that the information will be provided substantially the same degree of security afforded it by the Department of Defense of the United States. Also, regardless of any other markings on the document, it will not be downgraded or declassified without written approval of the originating United States agency.

DISTRIBUTION STATEMENT C. Distribution authorized to U.S. government agencies and their contractors. This publication is Administrative-Operational Use required for administrative and operational purposes, as determined on 22 October 1990. Other requests for this document must be referred to Commander, U.S. Army Chemical Research Development and Engineering Center, ATTN: SMCRR-MAT, Aberdeen Proving Ground, MD 21010–5423.

WARNING - This document contains technical data whose export is restricted by the Arms Export Control Act (Title 22, U.S.C., Sec 2751, et. seq.) or the Export Administration Act of 1979, as amended, Title 50, U.S.C., App. 2401 et. seq. Violations of these export laws are subject to severe criminal penalties. Disseminate in accordance with provisions of DoD Directive 5230.25.

DESTRUCTION NOTICE - Destroy by any method that will prevent disclosure of contents or reconstruction of the document.

HEADQUARTERS, DEPARTMENT OF THE ARMY

1 JUNE 1996

FIGURE 10. Example of a TM front cover. - Continued.

Source: https://assist.dla.mil -- Downloaded: 2016-12-09T23:32Z
Check the source to verify that this is the current version before use.

*TM 1–1520–238–PM

TECHNICAL MANUAL

PHASED MAINTENANCE INSPECTION CHECKLIST FOR

ARMY AH-64A HELICOPTER

*TM 1–1520–238–PM dated 28 February 2002 superseded TM 1–1520–238–PM dated 20 June 1994, including all changes.

DISTRIBUTION STATEMENT A. Approved for public release; distribution is unlimited.

HEADQUARTERS, DEPARTMENT OF THE ARMY

28 FEBRUARY 2002

FIGURE 11. Example of a phased maintenance TM front cover.

Source: https://assist.dla.mil -- Downloaded: 2016-12-09T23:32Z
Check the source to verify that this is the current version before use.

DMWR 11-5895-532-2

DEPOT MAINTENANCE WORK REQUIREMENT FOR

INTERROGATOR SETS
AN/TPX-46(V)1 (NSN 5895-00-423-1693) (EIC IZA)
AN/TPX-46(V)2 (NSN 5895-00-423-1694) (EIC IZB)
AN/TPX-46(V)3 (NSN 5895-00-423-1696) (EIC IZC)
AN/TPX-46(V)4 (NSN 5895-00-423-1700) (EIC IZD)
AN/TPX-46(V)6 (NSN 5895-00-423-1702) (EIC IZE)
AN/TPX-46A(V)1 (NSN 5895-01-163-5237) (EIC N/A)
AN/TPX-46A(V)2 (NSN 5895-01-162-5239) (EIC N/A)
AN/TPX-46A(V)3 (NSN 5895-01-163-3646) (EIC N/A)

This publication is not available through the St. Louis Media Distribution Division. This publication is available through US Army Communications-Electronics Command, Fort Monmouth, NJ 07703-5007.

This information is furnished upon the condition that it will not be released to another nation without the specific authority of the Department of the Army of the United States, that it will be used for military purposes only, that individual or corporate rights originating in the information, whether patented or not, will be respected, that the recipient will report promptly to the United States, any known or suspected compromise, and that the information will be provided substantially the same degree of security afforded it by the Department of Defense of the United States. Also, regardless of any other markings on the document, it will not be downgraded or declassified without written approval of the originating United States agency.

DISTRIBUTION STATEMENT D. Distribution authorized to the Department of Defense and U.S. DOD contractors only. This publication is critical technology, as determined on 20 May 1998. Other requests for this document shall be referred to AMSEL-LC-LM-LT, Fort Monmouth, NJ 07702-5007.

DESTRUCTION NOTICE - Destroy by any method that will prevent disclosure of contents or reconstruction of the document.

US ARMY COMMUNICATIONS-ELECTRONICS LIFE CYCLE MANAGEMENT COMMAND, FORT MONMOUTH, NJ

FIGURE 12. Example of a DMWR front cover.

Source: https://assist.dla.mil -- Downloaded: 2016-12-09T23:32Z
Check the source to verify that this is the current version before use.

DMWR X-XXXX-XXX

DEPOT MAINTENANCE WORK REQUIREMENT CONTAINING NATIONAL MAINTENANCE REPAIR STANDARDS FOR

INTERROGATOR SETS
AN/TPX-46(V)1 (NSN 5895-00-423-1693) (EIC IZA)
AN/TPX-46(V)2 (NSN 5895-00-423-1694) (EIC IZB)

This publication is not available through the St. Louis Media Distribution Division. This publication is available through US Army Communications-Electronics Command, Fort Monmouth, NJ 07703-5007.

This information is furnished upon the condition that it will not be released to another nation without the specific authority of the Department of the Army of the United States, that it will be used for military purposes only, that individual or corporate rights originating in the information, whether patented or not, will be respected, that the recipient will report promptly to the United States, any known or suspected compromise, and that the information will be provided substantially the same degree of security afforded it by the Department of Defense of the United States. Also, regardless of any other markings on the document, it will not be downgraded or declassified without written approval of the originating United States agency.

DISTRIBUTION STATEMENT D. Distribution authorized to the Department of Defense and U.S. DOD contractors only. This publication is critical technology, as determined on 20 May 1998. Other requests for this document shall be referred to AMSEL-LC-LM-LT, Fort Monmouth, NJ 07702-5007.

DESTRUCTION NOTICE - Destroy by any method that will prevent disclosure of contents or reconstruction of the document.

US ARMY COMMUNICATIONS-ELECTRONICS LIFE CYCLE MANAGEMENT COMMAND, FORT MONMOUTH, NJ

FIGURE 13. Example of a DMWR cover for a DMWR with Overhaul Standards.

Source: https://assist.dla.mil -- Downloaded: 2016-12-09T23:32Z
Check the source to verify that this is the current version before use.

NMWR X-XXXX-XXX

NATIONAL MAINTENANCE WORK REQUIREMENT CONTAINING NATIONAL MAINTENANCE REPAIR STANDARDS FOR

INTERROGATOR SETS AN/TPX-46(V)1 (NSN 5895-00-423-1693) (EIC IZA) AN/TPX-46(V)2 (NSN 5895-00-423-1694) (EIC IZB)

This publication is not available through the St. Louis Media Distribution Division. This publication is available through US Army Communications-Electronics Command, Fort Monmouth, NJ 07703-5007.

This information is furnished upon the condition that it will not be released to another nation without the specific authority of the Department of the Army of the United States, that it will be used for military purposes only, that individual or corporate rights originating in the information, whether patented or not, will be respected, that the recipient will report promptly to the United States, any known or suspected compromise, and that the information will be provided substantially the same degree of security afforded it by the Department of Defense of the United States. Also, regardless of any other markings on the document, it will not be downgraded or declassified without written approval of the originating United States agency.

DISTRIBUTION STATEMENT D. Distribution authorized to the Department of Defense and U.S. DOD contractors only. This publication is critical technology, as determined on 20 May 1998. Other requests for this document shall be referred to AMSEL-LC-LM-LT, Fort Monmouth, NJ 07702-5007.

DESTRUCTION NOTICE - Destroy by any method that will prevent disclosure of contents or reconstruction of the document.

US ARMY COMMUNICATIONS-ELECTRONICS LIFE CYCLE MANAGEMENT COMMAND, FORT MONMOUTH, NJ

FIGURE 14. Example of a NMWR Cover.

Source: https://assist.dla.mil -- Downloaded: 2016-12-09T23:32Z
Check the source to verify that this is the current version before use.

MANUAL NUMBER

LIST OF EFFECTIVE PAGES/WORK PACKAGES

NOTE: Zero in the "Change No." column indicates an original page or work package.

Date of issue for the original manual is:

Original 13 July 1998

TOTAL NUMBER OF PAGES FOR FRONT AND REAR MATTER IS 21 AND TOTAL NUMBER OF WORK PACKAGES IS 35, CONSISTING OF THE FOLLOWING:

Page/WP No.	Change No.	Page/WP No.	Change No.
Front Cover	0	Chp 7 title page	0
Blank	0	Blank	0
Warning summary (2 pgs)	0	WP 0022 (2 pgs)	0
i-iii	0	WP 0023 (4 pgs)	0
iv blank	0	WP 0024 (6 pgs)	0
Chp 1 title page	0	WP 0025 (4 pgs)	0
Blank	0	WP 0026 (4 pgs)	0
WP 0001 (4 pgs)	0	WP 0027 (4 pgs)	0
WP 0002 (10 pgs)	0	WP 0028 (4 pgs)	0
WP 0004 (2 pgs)	0	WP 0029 (4 pgs)	0
Chp 2 title page	0	WP 0030 (4 pgs)	0
Blank	0	WP 0031 (6 pgs)	0
WP 0005 (2 pgs)	0	WP 0032 (6 pgs)	0
WP 0006 (8 pgs)	0	WP 0033 (2 pgs)	0
WP 0007 (2 pgs)	0	WP 0034 (2 pgs)	0
Chp 3 title page	0	WP 0035 (2 pgs)	0
Blank	0	INDEX-1 - INDEX-14	0
WP 0008 (2 pgs)	0	WP 0003 (2 pgs)	0
Chp 4 title page	0	Inside back cover	0
Blank	0	Back cover	0
WP 0009 (12 pgs)	0		
Chp 5 title page	0		
Blank	0		
WP 0010 (2 pgs)	0		
WP 0011 (2 pgs)	0		
Chp 6 title page	0		
Blank	0		
WP 0012 (20 pgs)	0		
WP 0013 (30 pgs)	0		
WP 0014 (30 pgs)	0		
WP 0015 (2 pgs)	0		
WP 0016 (4 pgs)	0		
WP 0017 (2 pgs)	0		
WP 0018 (8 pgs)	0		
WP 0019 (12 pgs)	0		
WP 0020 (2 pgs)	0		
WP 0021 (2 pgs)	0		

A

FIGURE 15. Example of a list of effective pages for a new publication.

Source: https://assist.dla.mil -- Downloaded: 2016-12-09T23:32Z
Check the source to verify that this is the current version before use.

MANUAL NUMBER

LIST OF EFFECTIVE PAGES/WORK PACKAGES

NOTE: The portion of text affected by the change is indicated by a vertical bar in the outer margins of the page. Changes to illustrations are indicated by a vertical bar adjacent to the title. Zero in the "Change No." column indicates an original page or work package.

Date of issue for the original manual is:

Original 13 July 1998
Change 1 10 December 1998
Change 2 2 Mar 1999

TOTAL NUMBER OF PAGES FOR FRONT AND REAR MATTER IS 21 AND TOTAL NUMBER OF WORK PACKAGES IS 35, CONSISTING OF THE FOLLOWING:

Page/WP No.	Change No.	Page/WP No.	Change No.
Front Cover	0	Chp 7 title page	0
Blank	0	Blank	0
Warning summary (2 pgs)	0	WP 0022 (2 pgs)	0
i-iii	0	WP 0023 (4 pgs)	2
iv blank	0	WP 0024 (6 pgs)	1
Chp 1 title page	0	WP 0025 (4 pgs)	1
Blank	0	WP 0026 (4 pgs)	0
WP 0001 (4 pgs)	1	WP 0027 (4 pgs) Deleted	2
WP 0002 (10 pgs)	1	WP 0028 (4 pgs)	0
WP 0003 (2 pgs)	0	WP 0029 (4 pgs)	0
WP 0004 (2 pgs)	2	WP 0030 (4 pgs)	1
Chp 2 title page	0	WP 0031 (6 pgs)	2
Blank	0	WP 0032 (6 pgs)	0
WP 0005 (2 pgs)	1	WP 0033 (2 pgs)	1
WP 0006 (8 pgs)	0	WP 0034 (2 pgs)	0
WP 0007 (2 pgs)	0	WP 0034.1 (4 pgs) Added	2
Chp 3 title page	0	WP 0035 (2 pgs)	2
Blank	0	INDEX-1 - INDEX-14	0
WP 0008 (2 pgs)	0	Inside back cover	0
Chp 4 title page	0	Back cover	0
Blank	0		
WP 0009 (12 pgs)	0		
Chp 5 title page	0		
Blank	0		
WP 0010 (2 pgs)	0		
WP 0011 (2 pgs)	1		
Chp 6 title page	0		
Blank	0		
WP 0012 (20 pgs)	2		
WP 0013 (30 pgs)	0		
WP 0014 (30 pgs)	2		
WP 0015 (2 pgs)	0		
WP 0016 (4 pgs)	0		
WP 0017 (2 pgs)	1		
WP 0018 (8 pgs)	1		
WP 0019 (12 pgs)	1		
WP 0020 (2 pgs)	2		
WP 0021 (2 pgs)	0		

A **Change No. 2**

FIGURE 16. Example of a list of effective pages for a manual with changes.

Source: https://assist.dla.mil -- Downloaded: 2016-12-09T23:32Z
Check the source to verify that this is the current version before use.

MANUAL NUMBER

LIST OF EFFECTIVE PAGES/WORK PACKAGES

NOTE: This manual supersedes TM X-XXXX-XXX-XX dated 15 Mar 1998. Zero in the "Change No." column indicates an original page or work package.

Date of issue for the original manual is:

Original 16 September 1998

TOTAL NUMBER OF PAGES FOR FRONT AND REAR MATTER IS 21 AND TOTAL NUMBER OF WORK PACKAGES IS 36, CONSISTING OF THE FOLLOWING:

Page/WP No.	Change No.	Page/WP No.	Change No.
Front Cover	0	Chp 7 title page	0
Blank	0	Blank	0
Warning summary (2 pgs)	0	WP 0022 (2 pgs)	0
i-iii	0	WP 0023 (4 pgs)	0
iv blank	0	WP 0024 (6 pgs)	0
Chp 1 title page	0	WP 0025 (4 pgs)	0
Blank	0	WP 0026 (4 pgs)	0
WP 0001 (4 pgs)	0	WP 0027 (4 pgs)	0
WP 0002 (10 pgs)	0	WP 0028 (4 pgs)	0
WP 0003 (2 pgs)	0	WP 0029 (4 pgs)	0
WP 0004 (2 pgs)	0	WP 0030 (4 pgs)	0
Chp 2 title page	0	WP 0031 (6 pgs)	0
Blank	0	WP 0032 (6 pgs)	0
WP 0005 (2 pgs)	0	WP 0033 (2 pgs)	0
WP 0006 (8 pgs)	0	WP 0034 (2 pgs)	0
WP 0007 (2 pgs)	0	WP 0035 (4 pgs)	0
Chp 3 title page	0	WP 0036 (2 pgs)	0
Blank	0	INDEX-1 - INDEX-14	0
WP 0008 (2 pgs)	0	Inside back cover	0
Chp 4 title page	0	Back cover	0
Blank	0		
WP 0009 (12 pgs)	0		
Chp 5 title page	0		
Blank	0		
WP 0010 (2 pgs)	0		
WP 0011 (2 pgs)	0		
Chp 6 title page	0		
Blank	0		
WP 0012 (20 pgs)	0		
WP 0013 (30 pgs)	0		
WP 0014 (30 pgs)	0		
WP 0015 (2 pgs)	0		
WP 0016 (4 pgs)	0		
WP 0017 (2 pgs)	0		
WP 0018 (8 pgs)	0		
WP 0019 (12 pgs)	0		
WP 0020 (2 pgs)	0		
WP 0021 (2 pgs)	0		

A

FIGURE 17. Example of a list of effective pages for a revised manual.

Source: https://assist.dla.mil -- Downloaded: 2016-12-09T23:32Z
Check the source to verify that this is the current version before use.

MANUAL NUMBER

LIST OF EFFECTIVE PAGES/WORK PACKAGES

NOTE: Zero in the "Change No." column indicates an original page or work package.

Date of issue for the original manual is:

Original 24 April 1990

TOTAL NUMBER OF VOLUMES IS 3, TOTAL NUMBER OF PAGES FOR FRONT AND REAR MATTER IS 26 AND TOTAL NUMBER OF WORK PACKAGES IS 36, CONSISTING OF THE FOLLOWING:

Page/WP No.	Change No.	Page/WP No.	Change No.
VOLUME 1		WP 0013 (30 pgs)	0
Front Cover	0	WP 0014 (30 pgs)	0
Blank	0	WP 0015 (2 pgs)	0
Warning summary (4 pgs)	0	WP 0016 (4 pgs)	0
i-iii	0	WP 0017 (2 pgs)	0
iv blank	0	WP 0018 (8 pgs)	0
Chp 1 title page	0	WP 0019 (12 pgs)	0
Blank	0	WP 0020 (2 pgs)	0
WP 0001 (4 pgs)	0	WP 0021 (2 pgs)	0
WP 0002 (10 pgs)	0	INDEX-1 - INDEX-4	0
WP 0003 (2 pgs)	0	Inside back cover	0
WP 0004 (2 pgs)	0	Back cover	0
Chp 2 title page	0		
Blank	0	**VOLUME 3**	
WP 0005 (2 pgs)	0	Front cover	0
WP 0006 (8 pgs)	0	i-ii	0
WP 0007 (2 pgs)	0	Chp 7 title page	0
Chp 3 title page	0	Blank	0
Blank	0	WP 0022 (2 pgs)	0
WP 0008 (2 pgs)	0	WP 0023 (4 pgs)	0
INDEX-1 - INDEX-2	0	WP 0024 (6 pgs)	0
Inside back cover	0	WP 0025 (4 pgs)	0
Back cover	0	WP 0026 (4 pgs)	0
VOLUME 2		WP 0027 (4 pgs)	0
Front cover	0	WP 0028 (4 pgs)	0
i-ii	0	WP 0029 (4 pgs)	0
Chp 4 title page	0	WP 0030 (4 pgs)	0
Blank	0	WP 0031 (6 pgs)	0
WP 0009 (12 pgs)	0	WP 0032 (6 pgs)	0
Chp 5 title page	0	WP 0033 (2 pgs)	0
Blank	0	WP 0034 (2 pgs)	0
WP 0010 (2 pgs)	0	WP 0035 (4 pgs)	0
WP 0011 (2 pgs)	0	WP 0036 (2 pgs)	0
Chp 6 title page	0	INDEX-1 - INDEX-4	0
Blank	0	Inside back cover	0
WP 0012 (20 pgs)	0	Back cover	0

A **USAF**

FIGURE 18. Example of a list of effective pages for a multi-volume manual.

Source: https://assist.dla.mil -- Downloaded: 2016-12-09T23:32Z
Check the source to verify that this is the current version before use.

***TM NUMBER**

SERVICE NOMENCLATURE
CITY, STATE, TM DATE

TECHNICAL MANUAL

TYPE OF PUBLICATION
MAINTENANCE LEVELS

NOMENCLATURE OF EQUIPMENT
TYPE, MODEL, PART NUMBER
NATIONAL STOCK NUMBER (EIC)
OR
SUBJECT
SUBTITLE
WEAPON SYSTEM NAME

REPORTING ERRORS AND RECOMMENDING IMPROVEMENTS

You can help improve this manual. If you find any mistakes or if you know of a way to improve the procedures, please let us know. Mail your letter, DA Form 2028 (Recommended Changes to Publications and Blank Forms) directly to: *(insert name and address of proponent)*. You may also send in your recommended changes via electronic mail or by fax. Our fax number is *(insert DSN and commercial number of proponent)*. Our e-mail address is *(insert e-mail address of proponent)*. A reply will be furnished to you.

AVAILABILITY STATEMENT ,

***SUPERSEDURE NOTICE**

DISCLOSURE NOTICE

DISTRIBUTION STATEMENT

WARNING

DESTRUCTION NOTICE

FIGURE 19. Example of a title block page.

Source: https://assist.dla.mil -- Downloaded: 2016-12-09T23:32Z
Check the source to verify that this is the current version before use.

MANUAL NUMBER

HEADQUARTERS
DEPARTMENT OF THE ARMY
WASHINGTON, D.C., 1 JUNE 1996

TECHNICAL MANUAL

OPERATOR'S MANUAL

NUCLEAR-BIOLOGICAL-CHEMICAL
RECONNAISSANCE SYSTEM (NBCRS) FOX
M93A1
NSN 6665-01–372–1303 (EIC Y60)

REPORTING ERRORS AND RECOMMENDING IMPROVEMENTS

You can help improve this manual. If you find any mistakes or if you know of a way to improve the procedures, please let us know. Mail your letter, DA Form 2028 (Recommended Changes to Publications and Blank Forms) directly to: Technical Director, Edgewood Research Development and Engineering Center, ATTN: SCBRD-ENL-V, Aberdeen Proving Ground, MD 21010–5423. You may also send in your recommended changes via electronic mail or by fax. Our fax number is *(insert DSN and commercial number of proponent)*. Our e-mail address is *(insert e-mail address of proponent)*. A reply will be furnished to you.

This information is furnished upon the condition that it will not be released to another nation without the specific authority of the Department of the Army of the United States, that it will be used for military purposes only, that individual or corporate rights originating in the information, whether patented or not, will be respected, that the recipient will report promptly to the United States, any known or suspected compromise, and that the information will be provided substantially the same degree of security afforded it by the Department of Defense of the United States. Also, regardless of any other markings on the document, it will not be downgraded or declassified without written approval of the originating United States agency.This information is furnished upon the condition that it will not be released to another nation without the specific authority of the Department of the Army of the United States, that it will be used for military purposes only, that individual or corporate rights originating in the information, whether patented or not, will be respected, that the recipient will report promptly to the United States, any known or suspected compromise, and that the information will be provided substantially the same degree of security afforded it by the Department of Defense of the United States. Also, regardless of any other markings on the document, it will not be downgraded or declassified without written approval of the originating United States agency.

DISTRIBUTION STATEMENT C. Distribution authorized to U.S. government agencies and their contractors. This publication is Administrative-Operational Use required for administrative and operational purposes, as determined on 22 October 1990. Other requests for this document must be referred to Commander, U.S. Army Chemical Research Development and Engineering Center, ATTN: SMCRR-MAT, Aberdeen Proving Ground, MD 21010–5423.

WARNING - This document contains technical data whose export is restricted by the Arms Export Control Act (Title 22, U.S.C., Sec 2751, et. seq.) or the Export Administration Act of 1979, as amended, Title 50, U.S.C., App. 2401 et. seq. Violations of these export laws are subject to severe criminal penalties. Disseminate in accordance with provisions of DoD Directive 5230.25.

DESTRUCTION NOTICE. Destroy by any method that will prevent disclosure of contents or reconstruction of the document.

FIGURE 19. Example of a title block page. – continued.

Source: https://assist.dla.mil -- Downloaded: 2016-12-09T23:32Z
Check the source to verify that this is the current version before use.

*TM 1–1520–238–PM

HEADQUARTERS
DEPARTMENT OF THE ARMY
WASHINGTON, D.C., 28 FEBRUARY 2002

TECHNICAL MANUAL

PHASED MAINTENANCE INSPECTION CHECKLIST

ARMY
AH-64A HELICOPTER

REPORTING ERRORS AND RECOMMENDING IMPROVEMENTS

You can help improve this manual. If you find any mistakes or if you know of a way to improve the procedures, please let us know. Mail your letter, DA Form 2028 (Recommended Changes to Publications and Blank Forms) directly to: Commander, U.S. Army Aviation and Missile Command, ATTN: AMSAM–MMC–MA-NP, Redstone Arsenal, AL, 35898–5230. You may also send in your recommended changes via electronic mail or by fax. Our fax number is FAX 256–999–9999 or FAX (DSN) 999–9999. Our e-mail address is 2028@redstone.army.mil. A reply will be furnished to you.

WARNING

Certain inspections are mandatory safety-of-flight requirements, and the inspection intervals cannot be exceeded. In the event these inspections cannot be accomplished at the specified interval, the aircraft condition status symbol will be immediately changed to a red X. Mandatory safety-of-flight inspection items are printed in bold face type.

NOTE

Inspection items contained in this manual are considered the minimum requirements for performing phased maintenance and must be performed. The cumulative effects of inspection deferrals are unknown and could result in catastrophic failure or increased maintenance at a later date. Therefore, the use of special lettering to emphasize mandatory safety-of-flight inspection items is not to be construed as authority for deferral of other inspections.

*TM 1–1520–238–PM dated 28 February 2002 superseded TM 1–1520–238–PM dated 20 June 1994, including all changes.

DISTRIBUTION STATEMENT A. Approved for public release; distribution is unlimited.

FIGURE 20. Example of a title block page with warning data for phased maintenance inspection and preventive maintenance services.

Source: https://assist.dla.mil -- Downloaded: 2016-12-09T23:32Z
Check the source to verify that this is the current version before use.

MANUAL NUMBER

TABLE OF CONTENTS

Page No.
WP Sequence No.

How to Use This Manual

Chapter 1 – Operator General Information, Description, and Theory Of Operation

Transportation Electronic Shop General Information.....WP 0001

Figure 1. Family AN/TSM-191 Vehicles.....WP 0001.1

Transportation Electronic Shop Description and Data.....WP 0002

Figure 1. Exterior Components.....WP 0002.1

Figure 2. Interior Components.....WP 0002.2

Table 1. Difference Between Models.....WP 0002.3

Introduction.....WP 0003

Powerpack Theory of Operation.....WP 0004

Fuel System Theory of Operation.....WP 0005

Electrical System Theory of Operation.....WP 0006

Hydraulic System Theory of Operation.....WP 0007

Amphibious System Theory of Operation.....WP 0008

Bilge Pumps and Drain Valves Theory of Operation.....WP 0009

Fire Extinguisher System Theory of Operation.....WP 0010.3

Chapter 2 – Operator Instructions

==========

Expendable Supplies and Materials List.....WP 0123

Table 1. Expendable and Durable Items List.....WP 0123.1

Foldout Figures

FO 1. Wiring Schematic.....FP-1

FO 2. Hydraulic Flow.....FP-3

Glossary

Index

iii

FIGURE 21. Example of table of contents.

Source: https://assist.dla.mil -- Downloaded: 2016-12-09T23:32Z
Check the source to verify that this is the current version before use.

MANUAL NUMBER

TABLE OF CONTENTS

		WP Sequence No.
Introduction		WP 0001
GROUP 00	20-mm Self-Propelled Air Defense Artillery Gun M163A1	WP 0002
GROUP 01	20-mm Air Defense Gun Cannon M168	WP 0003
GROUP 0101	Recoil Adapter Assembly	WP 0004
GROUP 0102	Breech Bolt Assembly	WP 0005
GROUP 0103	Center Clamp Assembly	WP 0006
GROUP 02	20-mm Gun Mount Assembly M157A1	WP 0007
GROUP 0201	Storage Battery	WP 0008
GROUP 0202	Ammunition Chute	WP 0009
GROUP 0203	Element Chute	WP 0010
GROUP 0204	Mount Component Assembly Detail Illustrations	WP 0011
GROUP 020401	Turret Drum Assembly	WP 0012
GROUP 020402	Azimuth Drive Assembly	WP 0013
GROUP 020403	Azimuth Drive Friction Clutch Assembly	WP 0014
GROUP 03	Automatic Lead Computing Sight M61	WP 0015
GROUP 0301	Motor and Electromagnet Assemblies	WP 0016
GROUP 0302	Combining Glass and Gimbal	WP 0017
GROUP 0303	Caging Device and Cable Assembly	WP 0018
GROUP 0304	Housing Support Assembly	WP 0019

==========

GROUP 09	Special Tools (Repair Parts)	WP 0045
GROUP 0901	Boresight	WP 0046
GROUP 0902	Storage Drum Slot Gauge with Case	WP 0047
GROUP 99	Bulk Materials List	WP 0048
Special Tools List		WP 0049
Special Tools for field maintenance (Stowed with Case) Special Tools List		WP 0050
National Stock Number Index		WP 0051
Part Number Index		WP 0052
Reference Designator Index		WP 0053

iii

FIGURE 22. Example of RPSTL table of contents.

Source: https://assist.dla.mil -- Downloaded: 2016-12-09T23:32Z
Check the source to verify that this is the current version before use.

INDEX

Subject — WP Sequence No.–Page No.

A

Accessory Section
- Description ..... WP 0002–9
- Inspection ..... WP 0045–3
- Installation ..... WP 0045–10
- Removal ..... WP 0045–1
- Repair ..... WP 0045–6

Actuating Pilot Valve Leakage Check ..... WP 0011–10

Actuator, Compressor Bleed Valve
- Assembly ..... WP 0012–5
- Cleaning ..... WP 0012–2
- Disassembly ..... WP 0012–1
- Inspection ..... WP 0012–3
- Repair ..... WP 0012–4
- Adapter, Compressor Repair ..... WP 0022–9

Afterburner
- Description ..... WP 0002–1
- Inspection ..... WP 0047–1
- Installation ..... WP 0048–5
- Performer Limits ..... WP 0003–1
- Repair ..... WP 0049–1
- Removal ..... WP 0004–1
- Troubleshooting ..... WP 0060–1

Air System ..... WP 0004–6

Airseal Installation ..... WP 0016–4

Anti-icing Air System Description ..... WP 0002–2

B

Baffle and Spacer ..... WP 0034–7

Baffle Assembly ..... WP 0007–9

Bearings, Anti-friction
- Balance ..... WP 0041–2
- Cleaning ..... WP 0041–3
- Inspection ..... WP 0041–1
- Installation ..... WP 0042–3
- Removal ..... WP 0042–1

Bleed Control Limit Curve ..... WP 0040–3

Breather Pressurizing Valve
- Disassembly ..... WP 0017–1
- Inspection ..... WP 0017–3
- Installation ..... WP 0017–5

C

Carbon Seals
- Cleaning ..... WP 0008–2
- Inspection ..... WP 0008–1
- Replacement ..... WP 0009–1

Combustion Chambers
- Description ..... WP 0002–4

FIGURE 23. Example of an alphabetical index.

Source: https://assist.dla.mil -- Downloaded: 2016-12-09T23:32Z
Check the source to verify that this is the current version before use.

TM X-XXXX-XXX-XX

By Order of the Secretary of the Army:

PETER J. SCHOOMAKER
General, United States Army
Chief of Staff

Official:

(Signature)
JOYCE E. MORROW
Administrative Assistant to the
Secretary of the Army

DISTRIBUTION: To be distributed in accordance with the initial distribution number XXXXXX requirements for TM X-XXXX-XXX-XX.

FIGURE 24. Example of an authentication page.

Source: https://assist.dla.mil -- Downloaded: 2016-12-09T23:32Z
Check the source to verify that this is the current version before use.

TM 3-6665-339-14

TECHNICAL MANUAL

OPERATOR, FIELD, AND SUSTAINMENT MAINTENANCE MANUAL CONTAINING NATIONAL OVERAHAUL STANDARDS FOR

NUCLEAR-BIOLOGICAL-CHEMICAL RECONNAISSANCE SYSTEM (NBCRS) FOX M93A1

NSN 6665-01-372-1303 (EIC Y60)

DISTRIBUTION STATEMENT C - Distribution authorized to U.S. Government Agencies and their contractors. This publication is required for administrative and operational purposes, as determined on 22 October 1990. Other requests for this document must be referred to Commander, U.S. Army Chemical Research Development and Engineering Center, ATTN: SMCCR-MAT, Aberdeen Proving Ground, MD 21010-5423.

WARNING - This document contains export-controlled technical data whose export is restricted by the Arms Export Control Act (Title 22, U.S.C., Sec 2751 et seq) or Executive Order 12470. Violation of these export laws is subject to severe criminal penalties.

DESTRUCTION NOTICE - Destroy by any method that will prevent disclosure of contents or reconstruction of the document.

FIGURE 25. Example of front cover for TM with national overhaul standards.

Source: https://assist.dla.mil -- Downloaded: 2016-12-09T23:32Z
Check the source to verify that this is the current version before use.

MANUAL NUMBER

CHANGE NO. 1

HEADQUARTERS, DEPARTMENT OF THE ARMY
WASHINGTON, DC, 31 AUG 1993

TECHNICAL MANUAL

OPERATOR AND FIELD MAINTENANCE MANUAL FOR

TEST SET RADAR AN/TPM-22
NSN 4931-00-707-1229 (EIC D42)

DISTRIBUTION STATEMENT A - Approved for public release; distribution is unlimited.

TM X-XXX-XXXX-XX, 5 June 1987, is updated as follows:

1. File this sheet in front of the manual for reference.
2. This change is a result of new preventive maintenance checks and services procedures and new expendable/durable supplies and materials.
3. This change implements Army Maintenance Transformation and changes the Maintenance Allocation Chart (MAC) to support field and sustainment maintenance.
4. New or updated text is indicated by a vertical bar in the outer margin of the page.
5. Added illustrations are indicated by a vertical bar adjacent to the figure number. Changed illustrations are indicated by a miniature pointing hand adjacent to the updated area and a vertical bar adjacent to the figure number.
6. Remove old pages and insert new pages as indicated below.

Remove Pages	Insert Pages
a through d	a through d
None	e through g / (h blank)

6. Replace the following work packages with their revised version.

Work Package Number
WP 0044
WP 0125
WP 0271

7. Add the following new work packages.

Work Package Number
WP 1625.1
WP 1700.1

FIGURE 26. Example of transmittal page for change to support Army Maintenance Transformation.

Source: https://assist.dla.mil -- Downloaded: 2016-12-09T23:32Z
Check the source to verify that this is the current version before use.

This page intentionally left blank.

Source: https://assist.dla.mil -- Downloaded: 2016-12-09T23:32Z
Check the source to verify that this is the current version before use.

CONTENT SELECTION MATRIXES

A.1 SCOPE

A.1.1 Scope. This appendix lists technical content requirements for technical manuals for all major weapon systems and all types of equipment, including test and support equipment. This Appendix is a mandatory part of this standard. The information contained herein is intended for compliance. These requirements are applicable for all maintenance levels through overhaul (depot), including DMWRs/NMWRs.

A.2 APPLICABLE DOCUMENTS.

This section is not applicable to this appendix.

A.3 DEFINITIONS.

This section is not applicable to this appendix.

A.4 GENERAL REQUIREMENTS.

This section is not applicable to this appendix.

A.5 DETAILED REQUIREMENTS.

A.5.1 Tailoring requirements for technical manuals. Tailoring of the technical content requirements contained in Appendix B through Appendix GI is provided in TABLE A-II through TABLE A-XIVVI content matrix tables. The tables list all applicable technical content requirements for the development of the following page-based TMs. There is a sample filled-out matrix provided in MIL-HDBK-1222. This Appendix is a mandatory part of this standard. The information contained herein is intended for compliance. Copies of the applicable tables will be completed and added as an attachment to the Document Summary List of the contract.

A.5.1.1 Publication Titles.

a. All TM titles, except DMWR and NMWR, shall start with the words “TECHNICAL MANUAL” and all shall follow by the titles given in TABLE A-I.
b. If your RPSTL information contains Depot parts/special tools, the title shall indicate this (e.g., Field and Sustainment Maintenance Manual with Repair Parts and Special Tools List including Depot Repair Parts and Special Tools).

TABLE A-I. Publications Type and Title with Associated Context Matrix Table

PUB TYPE	TITLE	APPLICABLE TABLE
	EXCLUDING CONVENTIAL AND CHEMICAL AMMUNITION	
-10	Operator's Manual for (*insert system*)	TABLE A-II
-13	Operator and Field Maintenance Manual (*insert system*)	TABLE A-II

Source: https://assist.dla.mil -- Downloaded: 2016-12-09T23:32Z
Check the source to verify that this is the current version before use.

TABLE A-I. Publications Type and Title with Associated Context Matrix Table

PUB TYPE	TITLE	APPLICABLE TABLE
-13&P	Operator and Field Maintenance Manual including Repair Parts and Special Tools List for (*insert system*)	TABLE A-II
-14	Operator, Field, and Sustainment Maintenance Manual for (*insert system*)	TABLE A-II
-14&P	Operator, Field and Sustainment Maintenance Manual including Repair Parts and Special Tools List for (*insert system*)	TABLE A-II
-23	Field Maintenance Manual for (*insert system*)	TABLE A-IV (Non-aviation) TABLE A-V (Aviation)
-23&P	Field Maintenance Manual including Repair Parts and Special Tools List for (*insert system*)	TABLE A-IV (Non-aviation) TABLE A-V (Aviation)
-23P	Field Maintenance Repair Parts and Special Tools List for (*insert system*)	TABLE A-VI
-24	Field and Sustainment Maintenance Manual for (*insert system*)	TABLE A-IV (Non-aviation) TABLE A-V (Aviation)
-24&P	Field and Sustainment Maintenance Manual including Repair Parts and Special Tools List for (*insert system*)	TABLE A-IV (Non-aviation) TABLE A-V (Aviation)
-24P	Field and Sustainment Maintenance Repair Parts and Special Tools List for (*insert system*)	TABLE VI
-40	Sustainment Maintenance Manual for (*insert system*)	TABLE A-III
-40&P	Sustainment Maintenance Manual including Repair Parts and Special Tools List for (*insert system*)	TABLE A-III
-40P	Sustainment Maintenance Repair PArts and Special Tools List for (*insert system*)	TABLE A-VI
BDAR	(*Insert Maintenance level*) Battle Damage Assessment and Repair for (*insert system*)	TABLE A-XVI
DMWR	Depot Maintenance Work Requirement for (*insert system*)	TABLE A-VII
DMWR w/RPSTL	Depot Maintenance Work Requirement including Repair Parts and Special Tools List for (*insert system*)	TABLE A-VII

Source: https://assist.dla.mil -- Downloaded: 2016-12-09T23:32Z
Check the source to verify that this is the current version before use.

TABLE A-I. Publications Type and Title with Associated Context Matrix Table

PUB TYPE	TITLE	APPLICABLE TABLE
DMWR Containing Overhaul Standards	Depot Maintenance Work Requirement containing National Maintenance Repair Standards for (*insert system*)	TABLE A-VIII
DMWR Containing Overhaul Standards w/RPSTL	Depot Maintenance Work Requirement containing National Maintenance Repair Standards including Repair Parts and Special Tools List for (*insert system*)	TABLE A-VIII
NMWR	National Maintenance Work Requirement for (*insert system*)	TABLE A-VII
NMWR w/RPSTL	National Maintenance Work Requirement including Repair Parts and Special Tools List for (*insert system*)	TABLE A-VII
Aircraft Troubleshooting	Aviation Field Troubleshooting Manual for (*insert system*)	TABLE A-IX
	Aviation Sustainment Troubleshooting Manual for (*insert system*)	TABLE A-IX
	Aviation Field and Sustainment Troubleshooting Manual for (*insert system*)	TABLE A-IX
Aircraft PMD	Preventive Maintenance Daily Manual for (*insert system*)	TABLE A-X
Aircraft PMS	Preventive Maintenance Services Manual for (*insert system*)	TABLE A-X
Aircraft PM	Phased Maintenance Inspection Checklist for (*insert system*)	TABLE A-XI
Destruction TMs	Destruction of Equipment to Prevent Enemy Use for (*insert system*)	TABLE A-XV
	CONVENTIONAL AND CHEMICAL AMMUNITION	
-10	Operator's Manual.	TABLE A-XII
-13	Operator and Field Maintenance Manual for (*insert system*)	TABLE A-XII
-13&P	Operator and Field Maintenance Manual including Repair Parts and Special Tools List for (*insert system*)	TABLE A-XII

Source: https://assist.dla.mil -- Downloaded: 2016-12-09T23:32Z
Check the source to verify that this is the current version before use.

TABLE A-I. Publications Type and Title with Associated Context Matrix Table

PUB TYPE	TITLE	APPLICABLE TABLE
-14	Operator, Field, and Sustainment Maintenance Manual for (*insert system*)	TABLE A-XII
-14&P	Operator, Field, and Sustainment Maintenance Manual including Repair Parts and Special Tools List for (*insert system*)	TABLE A-XII
-23	Field Maintenance Manual for (*insert system*)	TABLE A-XIV
-23&P	Field Maintenance Manual including Repair Parts and Special Tools List for (*insert system*)	TABLE A-XIV
-24	Field and Sustainment Maintenance Manual for (*insert system*)	TABLE A-XIV
-24&P	Field and Sustainment Maintenance Manual including Repair Parts and Special Tools List for (*insert system*)	TABLE A-XIV
-40	Sustainment Maintenance Manual for (*insert system*)	TABLE A-XIII
-40&P	Sustainment Maintenance Manual including Repair Parts and Special Tools List for (*insert system*)	TABLE A-XIII

A.5.1.2 Technical content tables. TABLE A-II through TABLE A-XIV simplifies tailoring the technical content requirements of technical manuals prepared using this standard as a guide. The tables indicate which portions of this standard are applicable and list the content requirements for each type of TM. The content requirements for each applicable TM shall be arranged in the order presented in the tables. Inclusion of the applicable tables of this appendix is mandatory and is intended for compliance.

A.5.2 Intended use. First determine the types of TMs required for each acquisition and then duplicate the table(s) that contains the content requirements for those types of TMs. Indicate the types of TMs needed by filling in the blank after “TM Requirements Matrix for” at the top of each matrix. For each type of TM selected, indicate in the open blocks the “TM” content desired by entering an “R” for “REQUIRED” content or a “P” for content that is “PROHIBITED”. All blocks for the selected TM types in TABLE A-II through TABLE A-XIV must be completed with an “R” or a “P” for each TM acquisition. The blocks that already contain an “R” are required and cannot be changed. The blocks containing “P” are prohibited for that type of TM and shall not be included. The blocks that are shaded is content shall be required when needed to support the equipment. The blocks that are blank shall be filled in with “R”, “P”, or shading. Shading may be changed to “R” or “P”. The notation “Chapter X” in the matrix means that, if required, at least one of these chapters shall be in the TM. If more than one of these chapters is needed, then a required content item listed within the “Chapter X” matrix portion shall be in one of the chapters and may be in the others. For example, if there are more than two “Maintenance

Source: https://assist.dla.mil -- Downloaded: 2016-12-09T23:32Z
Check the source to verify that this is the current version before use.

Instructions" chapters, only one of them needs a "PMCS Work Package". The remarks page can be used to provide the contractor additional instructions such as indicating to the contractor any of the items in the matrix that will be provided by the proponent (done in house).

A.5.3 Acquisition requirements. The properly executed Technical Manual content Selection Matrix table becomes contractually binding when it is made part of the contract, statement of work or any other contractual instrument.

Source: https://assist.dla.mil -- Downloaded: 2016-12-09T23:32Z
Check the source to verify that this is the current version before use.

This page intentionally left blank.

Source: https://assist.dla.mil -- Downloaded: 2016-12-09T23:32Z
Check the source to verify that this is the current version before use.

TABLE A-II. TM Requirements Matrix for _____.

TM Content	-10	-13 -13&P	-14 -14&P	MIL-STD-40051-2 Reference	Element Name
FRONT MATTER	R	R	R	5.2.1	<paper.frnt>
Front cover	R	R	R	5.2.1.1	<frntcover>
(MC) Promulgation letter				5.2.1.2	<promulgation>
Warning summary				5.2.1.3	<warnsum>
Change transmittal page				5.2.1.4	<chgsheet>
List of effective pages / work packages *(Excluding pocket TMs and publications with less than eight pages)*	R	R	R	5.2.1.5	<loepwp>
Title block page	R	R	R	5.2.1.6	<titleblk>
Table of contents	R	R	R	5.2.1.8	<contents>
How to use this manual	R	R	R	5.2.1.9	<howtouse>
CHAPTER 1. GENERAL INFORMATION, EQUIPMENT DESCRIPTION AND THEORY OF OPERATION	R	R	R	B.5.1	<gim>
GENERAL INFORMATION WORK PACKAGE	R	R	R	B.5.2	<ginfowp>
Scope	R	R	R	B.5.2.3	<scope>
Maintenance forms, records, and reports	R	R	R	B.5.2.4	<mfrr>
Reporting equipment improvement recommendations (EIR)	R	R	R	B.5.2.5	<eir>
Hand receipt (HR) manuals				B.5.2.6	<handreceipt>
Corrosion prevention and control (CPC)	R	R	R	B.5.2.7	<cpcdata>
Ozone depleting substances (ODS)				B.5.2.8	<odsdata>
Destruction of Army materiel to prevent enemy use	R	R	R	B.5.2.8	<destructmat>
Preparation for storage or shipment	R	R	R	B.5.2.10	<pssref>
Warranty information				B.5.2.11	<wrntyref>
Nomenclature cross-reference list				B.5.2.12	<nomenreflist>
List of abbreviations/acronyms	R	R	R	B.5.2.13	<loa>
Quality of material	P			B.5.2.15	<qual.mat.info>
Safety, care, and handling				B.5.2.16	<sftyinfo>
Nuclear hardness				B.5.2.17	<hcp>
Calibration				B.5.2.18	<calref>
Supporting information for repair parts, special tools, TMDE, and support equipment	P			B.5.2.25	<supdata>
Copyright credit line				B.5.2.26	<copyrt>

Source: https://assist.dla.mil -- Downloaded: 2016-12-09T23:32Z
Check the source to verify that this is the current version before use.

TABLE A-II. TM Requirements Matrix for _____.

TM Content	-10	-13 -13&P	-14 -14&P	MIL-STD-40051-2 Reference	Element Name
EQUIPMENT DESCRIPTION AND DATA WORK PACKAGE	R	R	R	B.5.3	<descwp>
Equipment characteristics, capabilities, and features	R	R	R	B.5.3.3	<eqpinfo>
Location and description of major components	R	R	R	B.5.3.4	<locdesc>
Differences between models				B.5.3.5	<eqpdiff>
Equipment data	R	R	R	B.5.3.6	<eqpdata>
THEORY OF OPERATION WORK PACKAGE	R	R	R	B.5.4	<thrywp>
CHAPTER X. OPERATOR INSTRUCTIONS	R	R	R	C.5.1	<opim>
DESCRIPTION AND USE OF OPERATOR CONTROLS AND INDICATORS WORK PACKAGE	R	R	R	C.5.2.3	<ctrlindwp>
OPERATION UNDER USUAL CONDITIONS WORK PACKAGE	R	R	R	C.5.2.4	<opusualwp>
Security measures for electronic data				C.5.2.4.3	<secref>
Siting requirements				C.5.2.4.4	<site>
Shelter requirements				C.5.2.4.5	<shelter>
Assembly and preparation for use				C.5.2.4.6	<prepforuse>
Initial adjustments, before use and self-test				C.5.2.4.7	<initial>
Operating procedures	R	R	R	C.5.2.4.8	<oper>
Decals and instruction plates				C.5.2.4.8.2	<instructplt>
Operating auxiliary equipment				C.5.2.4.9	<operaux>
Preparation for movement				C.5.2.4.10	<prepmove>
OPERATION UNDER UNUSUAL CONDITIONS WORK PACKAGE	R	R	R	C.5.2.5	<opunuwp>
Security measures for electronic data				C.5.2.5.3.1	<secref>
Unusual environment / weather	R	R	R	C.5.2.5.3.2	<unusualenv>
Fording and swimming				C.5.2.5.3.3	<fording>
Interim nuclear, biological, and chemical (NBC) decontamination procedures				C.5.2.5.3.4	<decon>
Jamming and electronic countermeasures (ECM) procedures				C.5.2.5.3.5	<ecm>
Degraded operation procedures				C.5.2.5.3.6	<degraded>
EMERGENCY WORK PACKAGE				C.5.2.6	<emergencywp>
STOWAGE AND DECAL / DATA PLATE GUIDE WORK PACKAGE				C.5.2.7	<stowagewp>
ON-VEHICLE EQUIPMENT LOADING PLAN WORK PACKAGE				C.5.2.8	<eqploadwp>

Source: https://assist.dla.mil -- Downloaded: 2016-12-09T23:32Z
Check the source to verify that this is the current version before use.

TABLE A-II. TM Requirements Matrix for _____.

TM Content	-10	-13 -13&P	-14 -14&P	MIL-STD-40051-2 Reference	Element Name
CHAPTER X. TROUBLESHOOTING MASTER INDEX				D.5.1 D.5.4.4	<tim> <masterindexcategory>
TROUBLESHOOTING INDEX WORK PACKAGE	R	R	R	D.5.5.5	<tsindxwp>
CHAPTER X. TROUBLESHOOTING PROCEDURES ***NOTE*** *The notation (*) indicates that, if required, at least one of the these content items shall be included*		R	R	D.5.1 D.5.4.2	<tim> <troublecategory>
TROUBLESHOOTING INDEX WORK PACKAGE				D.5.5.5	<tsindxwp>
**OPERATIONAL CHECKOUT WORK PACKAGES*				D.5.5.8.3	<opcheckwp>
**TROUBLESHOOTING PROCEDURES WORK PACKAGES*				D.5.5.8.4	<tswp>
**COMBINED OPERATIONAL CHECKOUT AND TROUBLESHOOTING PROCEDURES WORK PACKAGES*				D.5.5.8.5	<opcheck-tswp>
CHAPTER X. PMCS MAINTENANCE INSTRUCTIONS ***NOTE*** *PMCS is required as a minimum in one maintenance chapter*				E.5.2 E.5.2.1	<mim> <pmcscategory>
PMCS INTRODUCTION WORK PACKAGE	R	R	R	E.5.3.4.1	<pmcsintrowp>
PMCS, INCLUDING LUBRICATION INSTRUCTIONS, WORK PACKAGE	R	R	R	E.5.3.4.2	<pmcswp>
CHAPTER X. MAINTENANCE INSTRUCTIONS ***NOTE*** *PMCS is required as a minimum in one maintenance chapter*	R	R	R	E.5.2 E.5.2.2 E.5.2.3	<mim> <maintenancepmcscategory> <maintenancecategory>
SERVICE UPON RECEIPT WORK PACKAGE	P	R	R	E.5.3.2	<surwp>
Siting	P			E.5.3.2.3.1	<siting>
Shelter requirements	P			E.5.3.2.3.2	<shltr>
Service upon receipt of materiel	P	R	R	E.5.3.2.3.3	<surmat>
Installation instructions	P	R	R	E.5.3.2.3.4	<install>
Preliminary servicing of equipment	P			E.5.3.2.3.5	<preserv>

Source: https://assist.dla.mil -- Downloaded: 2016-12-09T23:32Z
Check the source to verify that this is the current version before use.

TABLE A-II. TM Requirements Matrix for _____.

TM Content	-10	-13 -13&P	-14 -14&P	MIL-STD-40051-2 Reference	Element Name
Preliminary checks and adjustment of equipment	P			E.5.3.2.3.6	<prechkadj>
Preliminary calibration of equipment	P			E.5.3.2.3.7	<precal>
Circuit alignment	P			E.5.3.2.3.8	<calign>
Ammunition markings	P			E.5.3.2.3.9.1	<ammo.markings>
Classification of defects	P			E.5.3.2.3.9.2	<ammo.defect>
Ammunition handling	P			E.5.3.2.3.9.3	<ammo.handling>
Procedures to activate ammunition	P			E.5.3.2.3.9.4	<arm>
Other service upon receipt task	P			E.5.3.2.3.10	<other.surtsk>
Follow-on maintenance	P			E.5.3.2.3.11	<followon.maintsk>
EQUIPMENT / USER FITTING INSTRUCTIONS WORK PACKAGE (PERSONAL USE EQUIPMENT)	P			E.5.3.3	<perseqpwp>
PMCS INTRODUCTION WORK PACKAGE	R	R	R	E.5.3.4.1	<pmcsintrowp>
PMCS, INCLUDING LUBRICATION INSTRUCTIONS, WORK PACKAGE	R	R	R	E.5.3.4.2	<pmcswp>
MAINTENANCE WORK PACKAGES ***NOTE*** *As applicable, the following maintenance tasks shall be presented in the general order listed below:*	R	R	R	E.5.3.5	<maintwp>
Servicing				E.5.3.5.3.3	<service>
Ground handling				E.5.3.5.3.4	<groundtsk>
Inspection of installed items				E.5.3.5.3.5	<inspinstitm>
Removal				E.5.3.5.3.6	<remove>
Disassembly				E.5.3.5.3.7	<disassem>
Cleaning				E.5.3.5.3.8	<clean>
Inspection-acceptance and rejection criteria				E.5.3.5.3.9	<acptrejinsp>
Nondestructive testing inspection (NDTI)				E.5.3.5.3.10	<ndti>
Repair or replacement				E.5.3.5.3.11	<repair-rplc>
Alignment				E.5.3.5.3.12	<align>
Painting				E.5.3.5.3.13	<paint>
Lubrication				E.5.3.5.3.14	<lube>
Assembly				E.5.3.5.3.15	<assem>
Test and inspection				E.5.3.5.3.16	<test-inspect>
Installation				E.5.3.5.3.17	<install>
Adjustment				E.5.3.5.3.18	<adjust>
Calibration				E.5.3.5.3.19	<calibration>

Source: https://assist.dla.mil -- Downloaded: 2016-12-09T23:32Z
Check the source to verify that this is the current version before use.

TABLE A-II. TM Requirements Matrix for _____.

TM Content	-10	-13 -13&P	-14 -14&P	MIL-STD-40051-2 Reference	Element Name
Radio interference suppression				E.5.3.5.3.20	<ris>
Placing in service				E.5.3.5.3.21	<pis>
Testing				E.5.3.5.3.22	<test-pass>
Preparation for storage or shipment				E.5.3.5.3.25	<pss>
Classification of defects				E.5.3.5.3.26	<ammo.defect>
Handling ammunition				E.5.3.5.3.27	<ammo.handling>
Ammunition markings				E.5.3.5.3.28	<ammo.markings>
Procedures for ammunition activation				E.5.3.5.3.29	<arm>
Additional maintenance task				E.5.3.5.3.30	<other.maintsk>
Follow-on maintenance				E.5.3.5.3.31	<followon.maintsk>
GENERAL MAINTENANCE WORK PACKAGE				E.5.3.6	<maintwp>
LUBRICATION INSTRUCTIONS WORK PACKAGE				E.5.3.7	<lubewp>
ILLUSTRATED LIST OF MANUFACTURED ITEMS WORK PACKAGE	P			**Error! Reference source not found.**	<manuwp>
TORQUE LIMITS WORK PACKAGE	P			E.5.3.10	<torquewp>
WIRING DIAGRAMS WORK PACKAGE	P			E.5.3.11	<wiringwp>
CHAPTER X. AUXILIARY EQUIPMENT MAINTENANCE INSTRUCTIONS				E.5.2 E.5.2.6	<mim> <auxiliarycategory>
AUXILIARY EQUIPMENT MAINTENANCE WORK PACKAGE				E.5.3.13	<auxeqpwp>
ILLUSTRATED LIST OF MANUFACTURED ITEMS WORK PACKAGE	P			**Error! Reference source not found.**	<manuwp>
TORQUE LIMITS WORK PACKAGE	P			E.5.3.10	<torquewp>
WIRING DIAGRAMS WORK PACKAGE	P			E.5.3.11	<wiringwp>
CHAPTER X. AMMUNITION MAINTENANCE INSTRUCTIONS				E.5.2 E.5.2.7	<mim> <ammunitioncategory>
AMMUNITION MAINTENANCE WORK PACKAGE				E.5.3.14.1	<ammowp>
AMMUNITION MARKING INFORMATION WORK PACKAGE				E.5.3.14.2	<ammo.markingwp>
FOREIGN AMMUNITION (NATO) WORK PACKAGE				E.5.3.14.3	<natowp>

Source: https://assist.dla.mil -- Downloaded: 2016-12-09T23:32Z
Check the source to verify that this is the current version before use.

TABLE A-II. TM Requirements Matrix for _____.

TM Content	-10	-13 -13&P	-14 -14&P	MIL-STD-40051-2 Reference	Element Name
CHAPTER X. **PARTS INFORMATION** *(-10, -13, -14)* *(-13&P, -14&P)*	 P P	 P R	 P R	F.5.3.2	<pim>
INTRODUCTION WORK PACKAGE	P	R	R	F.5.3.5	<introwp>
REPAIR PARTS LIST WORK PACKAGE	P	R	R	F.5.3.6	<plwp>
REPAIR PARTS FOR SPECIAL TOOLS WORK PACKAGE	P			F.5.3.7	<stl_partswp>
KIT PARTS LIST WORK PACKAGE	P			F.5.3.8	<kitswp>
BULK ITEM WORK PACKAGE	P			F.5.3.9	<bulk_itemswp>
SPECIAL TOOLS LIST WORK PACKAGE	P			F.5.3.10	<stlwp>
NSN INDEX WORK PACKAGE	P	R	R	F.5.3.11.1	<nsnindxwp>
P/N INDEX WORK PACKAGE	P	R	R	F.5.3.11.2	<pnindxwp>
REFERENCE DESIGNATOR INDEX WORK PACKAGE	P			F.5.3.11.3	<refdesindxwp>
CHAPTER X. **DESTRUCTION OF EQUIPMENT TO PREVENT ENEMY USE**				Appendix H	<destruct-ginfowp> <destruct-materialwp>
GENERAL INFORMATION WORK PACKAGE				H.5.1	<destruct-ginfowp>
DESTRUCTION OF EQUIPMENT TO PREVENT ENEMY USE WORK PACKAGE				H.5.2	<destruct-materialwp>
BATTLE DAMAGE ASSESSMENT AND REPAIR (BDAR) INFORMATION				APPENDIX I	
GENERAL INFORMATION WORK PACKAGE				I.5.2.1	<bdar-geninfo>
BATTLE DAMAGE ASSESSMENT WORK PACKAGES				I.5.2.2	<damage-assesswp>
REPAIR WORK PACKAGES				I.5.2.3	<genrepairwp>
SPECIAL/FABRICATED TOOLS WORK PACKAGE				I.5.2.5	<bdartoolswp>
SUBSTITUTE MATRIALS/PARTS WORK PACKAGE				I.5.2.7	<substitute-matwp>

Source: https://assist.dla.mil -- Downloaded: 2016-12-09T23:32Z
Check the source to verify that this is the current version before use.

TABLE A-II. TM Requirements Matrix for _____.

TM Content	-10	-13 -13&P	-14 -14&P	MIL-STD-40051-2 Reference	Element Name
CHAPTER X. **SUPPORTING INFORMATION** ***NOTE*** *Applicable supporting information work packages shall be arranged in the order in which they are presented here and numbered accordingly.*	R	R	R	G.5.1	<sim>
REFERENCES WORK PACKAGE	R	R	R	G.5.2	<refwp>
INTRODUCTION FOR STANDARD TWO-LEVEL OR AVIATION TWO-LEVEL MAINTENANCE MAC WORK PACKAGE	P	R	R	G.5.3.13 G.5.3.3A	<macintrowp>
MAC WORK PACKAGE (STANDARD TWO-LEVEL OR AVIATION TWO-LEVEL)	P	R	R	G.5.3.4	<macwp>
COMPONENTS OF END ITEM (COEI) AND BASIC ISSUE ITEMS (BII) LISTS WORK PACKAGE	R	R	R	G.5.4	<coeibiiwp>
ADDITIONAL AUTHORIZATION LIST (AAL) WORK PACKAGE				G.5.5	<aalwp>
EXPENDABLE AND DURABLE ITEMS LIST WORK PACKAGE	R	R	R	G.5.6	<explistwp>
TOOL IDENTIFICATION LIST WORK PACKAGE	P			G.5.7	<toolidwp>
MANDATORY REPLACEMENT PARTS WORK PACKAGE	P			G.5.8	<mrplwp>
CRITICAL SAFETY ITEMS AND FLIGHT SAFETY CRITICAL AIRCRAFT PARTS WORK PACKAGE				G.5.9	<csi.fscap.wp>
SUPPORT ITEMS WORK PACKAGE				G.5.10	<supitemwp>
ADDITIONAL SUPPORTING WORK PACKAGES				G.5.11	<genwp>
REAR MATTER	R	R	R	5.2.2	<rear>
Glossary				5.2.2.1	<glossary>
Alphabetical index				5.2.2.2	<aindx>
DA Form 2028	R	R	R	5.2.2.3	<da2028>
Authentication page	R	R	R	5.2.2.4	<authent>
Foldout pages				5.2.2.5	<foldsect>
Back cover	R	R	R	5.2.2.7	<back>

Legend
R Required
P Prohibited
Shaded As Required

Source: https://assist.dla.mil -- Downloaded: 2016-12-09T23:32Z
Check the source to verify that this is the current version before use.

This page intentionally left blank.

Source: https://assist.dla.mil -- Downloaded: 2016-12-09T23:32Z
Check the source to verify that this is the current version before use.

TABLE A-III. TM Requirements Matrix for _____.

TM Content			-40 -40&P	MIL–STD–40051–2 Reference	Element Name
FRONT MATTER			R	5.2.1	<paper.frnt>
Front cover			R	5.2.1.1	<frntcover>
(MC) Promulgation letter				5.2.1.2	<promulgation>
Warning summary				5.2.1.3	<warnsum>
Change transmittal page				5.2.1.4	<chgsheet>
List of effective pages / work packages *(Excluding pocket TMs and publications with less than eight pages)*				5.2.1.5	<loepwp>
Title block page			R	5.2.1.6	<titleblk>
Table of contents			R	5.2.1.8	<contents>
How to use this manual			R	5.2.1.9	<howtouse>
CHAPTER 1. GENERAL INFORMATION, EQUIPMENT DESCRIPTION AND THEORY OF OPERATION			R	B.5.1	<gim>
GENERAL INFORMATION WORK PACKAGE			R	B.5.2	<ginfowp>
Scope			R	B.5.2.3	<scope>
Maintenance forms, records, and reports			R	B.5.2.4	<mfrr>
Reporting equipment improvement recommendations (EIR)			R	B.5.2.5	<eir>
Hand receipt (HR) manuals			P	B.5.2.6	<handreceipt>
Corrosion prevention and control (CPC)			R	B.5.2.7	<cpcdata>
Ozone depleting substances (ODS)				B.5.2.8	<odsdata>
Destruction of Army materiel to prevent enemy use			R	B.5.2.8	<destructmat>
Preparation for storage or shipment			R	B.5.2.10	<pssref>
Warranty information				B.5.2.11	<wrntyref>
Nomenclature cross-reference list				B.5.2.12	<nomenreflist>
List of abbreviations			R	B.5.2.13	<loa>
Quality of material			R	B.5.2.15	<qual.mat.info>
Safety, care, and handling				B.5.2.16	<sftyinfo>
Nuclear hardness				B.5.2.17	<hcp>
Calibration				B.5.2.18	<calref>
Supporting information for repair parts, special tools, TMDE, and support equipment				B.5.2.25	<supdata>
Copyright credit line				B.5.2.26	<copyrt>

Source: https://assist.dla.mil -- Downloaded: 2016-12-09T23:32Z
Check the source to verify that this is the current version before use.

TABLE A-III. TM Requirements Matrix for _____.

TM Content			-40 -40&P	MIL–STD–40051–2 Reference	Element Name
EQUIPMENT DESCRIPTION AND DATA WORK PACKAGE			R	B.5.3	<descwp>
Equipment characteristics, capabilities, and features			R	B.5.3.3	<eqpinfo>
Location and description of major components			R	B.5.3.4	<locdesc>
Differences between models				B.5.3.5	<eqpdiff>
Equipment data			R	B.5.3.6	<eqpdata>
THEORY OF OPERATION WORK PACKAGE			R	B.5.4	<thrywp>
CHAPTER X. TROUBLESHOOTING MASTER INDEX				D.5.1 D.5.4.4	<tim> <masterindexcategory>
TROUBLESHOOTING INDEX WORK PACKAGE			R	D.5.5.5	<tsindxwp>
CHAPTER X. TROUBLESHOOTING PROCEDURES ***NOTE*** *The notation (*) indicates that at least one of the these content items shall be included*			R	D.5.1 D.5.4.2	<tim> <troublecategory>
TROUBLESHOOTING INDEX WORK PACKAGE				D.5.5.5	<tsindxwp>
**OPERATIONAL CHECKOUT WORK PACKAGE*				D.5.5.8.3	<opcheckwp>
**TROUBLESHOOTING PROCEDURES WORK PACKAGE*				D.5.5.8.4	<tswp>
**COMBINED OPERATIONAL CHECKOUT AND TROUBLESHOOTING PROCEDURES WORK PACKAGE*				D.5.5.8.5	<opcheck-tswp>
CHAPTER X. PMCS MAINTENANCE INSTRUCTIONS ***NOTE*** *PMCS is required as a minimum in one maintenance chapter*				E.5.2 E.5.2.1	<mim> <pmcscategory>
PMCS INTRODUCTION WORK PACKAGE			R	E.5.3.4.1	<pmcsintrowp>
PMCS, INCLUDING LUBRICATION INSTRUCTIONS, WORK PACKAGE			R	E.5.3.4.2	<pmcswp>

Source: https://assist.dla.mil -- Downloaded: 2016-12-09T23:32Z
Check the source to verify that this is the current version before use.

TABLE A-III. TM Requirements Matrix for _____.

TM Content			-40 -40&P	MIL–STD–40051–2 Reference	Element Name
CHAPTER X. MAINTENANCE INSTRUCTIONS			R	E.5.2 E.5.2.2 E.5.2.3	<mim> <maintenancepmcscategory> <maintenancecategory>
SERVICE UPON RECEIPT WORK PACKAGE			P	E.5.3.2	<surwp>
Siting			P	E.5.3.2.3.1	<siting>
Shelter requirements			P	E.5.3.2.3.2	<shltr>
Service upon receipt of materiel			P	E.5.3.2.3.3	<surmat>
Installation instructions			P	E.5.3.2.3.4	<install>
Preliminary servicing of equipment			P	E.5.3.2.3.5	<preserv>
Preliminary checks and adjustment of equipment			P	E.5.3.2.3.6	<prechkadj>
Preliminary calibration of equipment			P	E.5.3.2.3.7	<precal>
Circuit alignment			P	E.5.3.2.3.8	<calign>
Ammunition markings			P	E.5.3.2.3.9.1	<ammo.markings>
Classification of defects			P	E.5.3.2.3.9.2	<ammo.defect>
Ammunition handling			P	E.5.3.2.3.9.3	<ammo.handling>
Procedures to activate ammunition			P	E.5.3.2.3.9.4	<arm>
Additional service upon receipt task			P	E.5.3.2.3.10	<other.surtsk>
Follow-on maintenance			P	E.5.3.2.3.11	<followon.maintsk>
EQUIPMENT / USER FITTING INSTRUCTIONS WORK PACKAGE (PERSONAL USE EQUIPMENT)				E.5.3.3	<perseqpwp>
PMCS INTRODUCTION WORK PACKAGE			R	E.5.3.4.1	<pmcsintrowp>
PMCS, INCLUDING LUBRICATION INSTRUCTIONS, WORK PACKAGE			R	E.5.3.4.2	<pmcswp>
MAINTENANCE WORK PACKAGES ***NOTE*** *As applicable, the following maintenance tasks shall be presented in the general order listed below:*			R	E.5.3.5	<maintwp>
Servicing				E.5.3.5.3.3	<service>
Ground handling				E.5.3.5.3.4	<groundtsk>
Inspection of installed items				E.5.3.5.3.5	<inspinstitm>
Removal				E.5.3.5.3.6	<remove>
Disassembly				E.5.3.5.3.7	<disassem>
Cleaning				E.5.3.5.3.8	<clean>
Inspection - acceptance and rejection criteria				E.5.3.5.3.9	<acptrejinsp>
Nondestructive testing inspection (NDTI)				E.5.3.5.3.10	<ndti>

Source: https://assist.dla.mil -- Downloaded: 2016-12-09T23:32Z
Check the source to verify that this is the current version before use.

TABLE A-III. TM Requirements Matrix for _____.

TM Content			-40 -40&P	MIL–STD–40051–2 Reference	Element Name
Repair or replacement				E.5.3.5.3.11	<repair-rplc>
Alignment				E.5.3.5.3.12	<align>
Painting				E.5.3.5.3.13	<paint>
Lubrication				E.5.3.5.3.14	<lube>
Assembly				E.5.3.5.3.15	<assem>
Test and inspection				E.5.3.5.3.16	<test-inspect>
Installation				E.5.3.5.3.17	<install>
Adjustment				E.5.3.5.3.18	<adjust>
Calibration				E.5.3.5.3.19	<calibration>
Radio interference suppression				E.5.3.5.3.20	<ris>
Placing in service				E.5.3.5.3.21	<pis>
Testing				E.5.3.5.3.22	<test-pass>
Preparation for storage or shipment				E.5.3.5.3.25	<pss>
Classification of defects				E.5.3.5.3.26	<ammo.defect>
Handling ammunition				E.5.3.5.3.27	<ammo.handling>
Ammunition markings				E.5.3.5.3.28	<ammo.markings>
Procedures for ammunition activation				E.5.3.5.3.29	<arm>
Additional maintenance task				E.5.3.5.3.30	<other.surtsk>
Follow-on maintenance				E.5.3.5.3.31	<followon.maintsk>
GENERAL MAINTENANCE WORK PACKAGE				E.5.3.6	<maintwp>
LUBRICATION INSTRUCTIONS WORK PACKAGE				E.5.3.7	<lubewp>
ILLUSTRATED LIST OF MANUFACTURED ITEMS WORK PACKAGE				**Error! Reference source not found.**	<manuwp>
Introduction				E.5.3.9.1	<intro>
Manufacturing procedures work package				E.5.3.9.2	<manfcprocwp>
TORQUE LIMITS WORK PACKAGE				E.5.3.10	<torquewp>
WIRING DIAGRAMS WORK PACKAGE				E.5.3.11	<wiringwp>
CHAPTER X. AUXILIARY EQUIPMENT MAINTENANCE INSTRUCTIONS				E.5.2 E.5.2.6	<mim> <auxiliarycategory>
AUXILIARY EQUIPMENT MAINTENANCE WORK PACKAGE				E.5.3.13	<auxeqpwp>
ILLUSTRATED LIST OF MANUFACTURED ITEMS WORK PACKAGE				**Error! Reference source not found.**	<manuwp>
Introduction				E.5.3.9.1	<intro>
Manufacturing procedures work package				E.5.3.9.2	<manfcprocwp>

Source: https://assist.dla.mil -- Downloaded: 2016-12-09T23:32Z
Check the source to verify that this is the current version before use.

TABLE A-III. TM Requirements Matrix for _____.

TM Content			-40 -40&P	MIL–STD–40051–2 Reference	Element Name
TORQUE LIMITS WORK PACKAGE				E.5.3.10	<torquewp>
WIRING DIAGRAMS WORK PACKAGE				E.5.3.11	<wiringwp>
CHAPTER X. AMMUNITION MAINTENANCE INSTRUCTIONS				E.5.2 E.5.2.7	<mim> <ammunitioncategory>
AMMUNITION MAINTENANCE WORK PACKAGE				E.5.3.14.1	<ammowp>
AMMUNITION MARKING INFORMATION WORK PACKAGE				E.5.3.14.2	<ammo.markingwp>
FOREIGN AMMUNITION (NATO) WORK PACKAGE				E.5.3.14.3	<natowp>
CHAPTER X. PARTS INFORMATION *(40)* *(-40&P)*			 P R	F.5.3.2	<pim>
INTRODUCTION WORK PACKAGE			R	F.5.3.5	<introwp>
REPAIR PARTS LIST WORK PACKAGE			R	F.5.3.6	<plwp>
REPAIR PARTS FOR SPECIAL TOOLS WORK PACKAGE				F.5.3.7	<stl_partswp>
KIT PARTS LIST WORK PACKAGE				F.5.3.8	<kitswp>
BULK ITEMS WORK PACKAGE				F.5.3.9	<bulk_itemswp>
SPECIAL TOOLS LIST WORK PACKAGE				F.5.3.10	<stlwp>
NSN INDEX WORK PACKAGE			R	F.5.3.11.1	<nsnindxwp>
P/N INDEX WORK PACKAGE			R	F.5.3.11.2	<pnindxwp>
REFERENCE DESIGNATOR INDEX WORK PACKAGE				F.5.3.11.3	<refdesindxwp>
CHAPTER X. SUPPORTING INFORMATION ***NOTE*** *Applicable supporting information work packages shall be arranged in the order in which they are presented here and numbered accordingly.*			R	G.5.1	<sim>
REFERENCES WORK PACKAGE			R	G.5.2	<refwp>
EXPENDABLE AND DURABLE ITEMS WORK PACKAGE			R	G.5.6	<explistwp>
TOOL IDENTIFICATION LIST WORK PACKAGE				G.5.7	<toolidwp>
MANDATORY REPLACEMENT PARTS WORK PACKAGE				G.5.8	<mrplwp>

Source: https://assist.dla.mil -- Downloaded: 2016-12-09T23:32Z
Check the source to verify that this is the current version before use.

TABLE A-III. TM Requirements Matrix for _____.

TM Content	-40 -40&P	MIL–STD–40051–2 Reference	Element Name
CRITICAL SAFETY ITEMS AND FLIGHT SAFETY CRITICAL AIRCRAFT PARTS WORK PACKAGE		G.5.9	<csi.fscap.wp>
SUPPORT ITEMS WORK PACKAGE		G.5.10	<supitemwp>
ADDITIONAL SUPPORTING WORK PACKAGES		G.5.11	<genwp>
REAR MATTER	R	5.2.2	<rear>
Glossary		5.2.2.1	<glossary>
Alphabetical index		5.2.2.2	<aindx>
DA Form 2028	R	5.2.2.3	<da2028>
Authentication page	R	5.2.2.4	<authent>
Foldout pages		5.2.2.5	<foldsect>
Back cover	R	5.2.2.7	<back>

Legend
R Required
P Prohibited
Shaded As Required

Source: https://assist.dla.mil -- Downloaded: 2016-12-09T23:32Z
Check the source to verify that this is the current version before use.

TABLE A-IV. TM Requirements Matrix for _____.

TM Content	-23 -23&P	-24 -24&P	MIL-STD-40051-2 Reference	Element Name
FRONT MATTER	R	R	5.2.1	<paper.frnt>
Front cover	R	R	5.2.1.1	<frntcover>
(MC) Promulgation letter			5.2.1.2	<promulgation>
Warning summary			5.2.1.3	<warnsum>
Change transmittal page			5.2.1.4	<chgsheet>
List of effective pages / work packages *(Excluding pocket TMs and publications with less than eight pages)*	R	R	5.2.1.5	<loepwp>
Title block page	R	R	5.2.1.6	<titleblk>
Table of contents	R	R	5.2.1.8	<contents>
How to use this manual	R	R	5.2.1.9	<howtouse>
CHAPTER 1. GENERAL INFORMATION, EQUIPMENT DESCRIPTION AND THEORY OF OPERATION	R	R	B.5.1	<gim>
GENERAL INFORMATION WORK PACKAGE	R	R	B.5.2	<ginfowp>
Scope	R	R	B.5.2.3	<scope>
Maintenance forms, records, and reports	R	R	B.5.2.4	<mfrr>
Reporting equipment improvement recommendations (EIR)	R	R	B.5.2.5	<eir>
Hand receipt (HR) information			B.5.2.6	<handreceipt>
Corrosion prevention and control (CPC)	R	R	B.5.2.7	<cpcdata>
Ozone depleting substances (ODS)			B.5.2.8	<odsdata>
Destruction of Army materiel to prevent enemy use	R	R	B.5.2.8	<destructmat>
Preparation for storage or shipment	R	R	B.5.2.10	<pssref>
Warranty information			B.5.2.11	<wrntyref>
Nomenclature cross-reference list			B.5.2.12	<nomenreflist>
List of abbreviations	R	R	B.5.2.13	<loa>
Quality of material	R	R	B.5.2.15	<qual.mat.info>
Safety, care, and handling			B.5.2.16	<sftyinfo>
Nuclear hardness			B.5.2.17	<hcp>
Calibration			B.5.2.18	<calref>
Supporting information for repair parts, special tools, TMDE, and support equipment			B.5.2.25	<supdata>
Copyright credit line			B.5.2.26	<copyrt>

Source: https://assist.dla.mil -- Downloaded: 2016-12-09T23:32Z
Check the source to verify that this is the current version before use.

TABLE A-IV. TM Requirements Matrix for _____.

TM Content	-23 -23&P	-24 -24&P	MIL-STD-40051-2 Reference	Element Name
EQUIPMENT DESCRIPTION AND DATA WORK PACKAGE	R	R	B.5.3	<descwp>
Equipment characteristics, capabilities, and features	R	R	B.5.3.3	<eqpinfo>
Location and description of major components	R	R	B.5.3.4	<locdesc>
Differences between models			B.5.3.5	<eqpdiff>
Equipment data	R	R	B.5.3.6	<eqpdata>
THEORY OF OPERATION WORK PACKAGE	R	R	B.5.4	<thrywp>
CHAPTER X. TROUBLESHOOTING MASTER INDEX			D.5.1 D.5.4.4	<tim> <masterindexcategory>
TROUBLESHOOTING INDEX WORK PACKAGE	R	R	D.5.5.5	<tsindxwp>
CHAPTER X. TROUBLESHOOTING PROCEDURES ***NOTE*** *The notation (*) indicates that, if required, at least one of the these content items shall be included*	R	R	D.5.1 D.5.4.2	<tim> <troublecategory>
TROUBLESHOOTING INDEX WORK PACKAGE			D.5.5.5	<tsindxwp>
**OPERATIONAL CHECKOUT WORK PACKAGES*			D.5.5.8.3	<opcheckwp>
**TROUBLESHOOTING PROCEDURES WORK PACKAGES*			D.5.5.8.4	<tswp>
**COMBINED OPERATIONAL CHECKOUT AND TROUBLESHOOTING PROCEDURES WORK PACKAGES*			D.5.5.8.5	<opcheck-tswp>
CHAPTER X. PMCS MAINTENANCE INSTRUCTIONS ***NOTE*** *PMCS is required as a minimum in one maintenance chapter*			E.5.2 E.5.2.1	<mim> <pmcscategory>
PMCS INTRODUCTION WORK PACKAGE	R	R	E.5.3.4.1	<pmcsintrowp>
PMCS, INCLUDING LUBRICATION INSTRUCTIONS, WORK PACKAGE	R	R	E.5.3.4.2	<pmcswp>

Source: https://assist.dla.mil -- Downloaded: 2016-12-09T23:32Z
Check the source to verify that this is the current version before use.

TABLE A-IV. TM Requirements Matrix for _____.

TM Content	-23 -23&P	-24 -24&P	MIL-STD-40051-2 Reference	Element Name
CHAPTER X. **MAINTENANCE INSTRUCTIONS** ***NOTE*** *PMCS is required as a minimum in one maintenance chapter*	R	R	E.5.2 E.5.2.2 E.5.2.3	<mim> <maintenancepmcscategory> <maintenancecategory>
SERVICE UPON RECEIPT WORK PACKAGE	R	R	E.5.3.2	<surwp>
Siting			E.5.3.2.3.1	<siting>
Shelter requirements			E.5.3.2.3.2	<shltr>
Service upon receipt of materiel	R	R	E.5.3.2.3.3	<surmat>
Installation instructions	R	R	E.5.3.2.3.4	<install>
Preliminary servicing of equipment			E.5.3.2.3.5	<preserv>
Preliminary checks and adjustment of equipment			E.5.3.2.3.6	<prechkadj>
Preliminary calibration of equipment			E.5.3.2.3.7	<precal>
Circuit alignment			E.5.3.2.3.8	<calign>
Ammunition markings			E.5.3.2.3.9.1	<ammo.markings>
Classification of defects			E.5.3.2.3.9.2	<ammo.defect>
Ammunition handling			E.5.3.2.3.9.3	<ammo.handling>
Procedures to activate ammunition			E.5.3.2.3.9.4	<arm>
Additional service upon receipt task			E.5.3.2.3.10	<other.surtsk>
Follow-on maintenance			E.5.3.2.3.11	<followon.maintsk>
EQUIPMENT / USER FITTING INSTRUCTIONS WORK PACKAGE (PERSONAL USE EQUIPMENT)			E.5.3.3	<perseqpwp>
PMCS INTRODUCTION WORK PACKAGE	R	R	E.5.3.4.1	<pmcsintrowp>
PMCS, INCLUDING LUBRICATION INSTRUCTIONS, WORK PACKAGE	R	R	E.5.3.4.2	<pmcswp>
MAINTENANCE WORK PACKAGES ***NOTE*** *As applicable, the following maintenance tasks shall be presented in the general order listed below:*	R	R	E.5.3.5	<maintwp>
Servicing			E.5.3.5.3.3	<service>
Ground handling			E.5.3.5.3.4	<groundtsk>
Inspection of installed items			E.5.3.5.3.5	<inspinstitm>
Removal			E.5.3.5.3.6	<remove>
Disassembly			E.5.3.5.3.7	<disassem>
Cleaning			E.5.3.5.3.8	<clean>
Inspection - acceptance and rejection criteria			E.5.3.5.3.9	<acptrejinsp>
Nondestructive testing inspection (NDTI)			E.5.3.5.3.10	<ndti>

Source: https://assist.dla.mil -- Downloaded: 2016-12-09T23:32Z
Check the source to verify that this is the current version before use.

TABLE A-IV. TM Requirements Matrix for _____.

TM Content	-23 -23&P	-24 -24&P	MIL-STD-40051-2 Reference	Element Name
Repair or replacement			E.5.3.5.3.11	<repair-rplc>
Alignment			E.5.3.5.3.12	<align>
Painting			E.5.3.5.3.13	<paint>
Lubrication			E.5.3.5.3.14	<lube>
Assembly			E.5.3.5.3.15	<assem>
Test and inspection			E.5.3.5.3.16	<test-inspect>
Installation			E.5.3.5.3.17	<install>
Adjustment			E.5.3.5.3.18	<adjust>
Calibration			E.5.3.5.3.19	<calibration>
Radio interference suppression			E.5.3.5.3.20	<ris>
Placing in service			E.5.3.5.3.21	<pis>
Testing			E.5.3.5.3.22	<test-pass>
Preparation for storage or shipment			E.5.3.5.3.25	<pss>
Classification of defects			E.5.3.5.3.26	<ammo.defect>
Handling ammunition			E.5.3.5.3.27	<ammo.handling>
Ammunition markings			E.5.3.5.3.28	<ammo.markings>
Procedures for ammunition activation			E.5.3.5.3.29	<arm>
Additional maintenance task			E.5.3.5.3.30	<other.maintsk>
Follow-on maintenance			E.5.3.5.3.31	<followon.maintsk>
GENERAL MAINTENANCE WORK PACKAGE			E.5.3.6	<maintwp>
LUBRICATION INSTRUCTIONS WORK PACKAGE			E.5.3.7	<lubewp>
ILLUSTRATED LIST OF MANUFACTURED ITEMS WORK PACKAGE			**Error! Reference source not found.**	<manuwp>
Introduction			E.5.3.9.1	<intro>
Manufacturing procedures work package			E.5.3.9.2	<manfcprocwp>
TORQUE LIMITS WORK PACKAGE			E.5.3.10	<torquewp>
WIRING DIAGRAMS WORK PACKAGE			E.5.3.11	<wiringwp>
CHAPTER X. AUXILIARY EQUIPMENT MAINTENANCE INSTRUCTIONS			E.5.2 E.5.2.6	<mim> <auxiliarycategory>
AUXILIARY EQUIPMENT MAINTENANCE WORK PACKAGE			E.5.3.13	<auxeqpwp>
ILLUSTRATED LIST OF MANUFACTURED ITEMS WORK PACKAGE			**Error! Reference source not found.**	<manuwp>
Introduction			E.5.3.9.1	<intro>
Manufacturing procedures work package			E.5.3.9.2	<manfcprocwp>
TORQUE LIMITS WORK PACKAGE			E.5.3.10	<torquewp>

Source: https://assist.dla.mil -- Downloaded: 2016-12-09T23:32Z
Check the source to verify that this is the current version before use.

TABLE A-IV. TM Requirements Matrix for _____.

TM Content	-23 -23&P	-24 -24&P	MIL-STD-40051-2 Reference	Element Name
WIRING DIAGRAMS WORK PACKAGE			E.5.3.11	<wiringwp>
CHAPTER X. AMMUNITION MAINTENANCE INSTRUCTIONS			E.5.2 E.5.2.7	<mim> <ammunitioncategory>
AMMUNITION MAINTENANCE WORK PACKAGE			E.5.3.14.1	<ammowp>
AMMUNITION MARKING INFORMATION WORK PACKAGE			E.5.3.14.2	<ammo.markingwp>
FOREIGN AMMUNITION (NATO) WORK PACKAGE			E.5.3.14.3	<natowp>
CHAPTER X. PARTS INFORMATION *(–23, –24)* *(–23&P, –24&P)*	 P R	 P R	F.5.3.2	<pim>
INTRODUCTION WORK PACKAGE	R	R	F.5.3.5	<introwp>
REPAIR PARTS LIST WORK PACKAGE	R	R	F.5.3.6	<plwp>
REPAIR PARTS FOR SPECIAL TOOLS WORK PACKAGE			F.5.3.7	<stl_partswp>
KIT PARTS LIST WORK PACKAGE			F.5.3.8	<kitswp>
BULK ITEM WORK PACKAGE			F.5.3.9	<bulk_itemswp>
SPECIAL TOOLS LIST WORK PACKAGE			F.5.3.10	<stlwp>
NSN INDEX WORK PACKAGE	R	R	F.5.3.11.1	<nsnindxwp>
P/N INDEX WORK PACKAGE	R	R	F.5.3.11.2	<pnindxwp>
REFERENCE DESIGNATOR INDEX WORK PACKAGE			F.5.3.11.3	<refdesindxwp>
BATTLE DAMAGE ASSESSMENT AND REPAIR (BDAR) INFORMATION			APPENDIX I	
GENERAL INFORMATION WORK PACKAGE			I.5.2.1	<bdar-geninfo>
BATTLE DAMAGE ASSESSMENT WORK PACKAGES			I.5.2.2	<damage-assesswp>
REPAIR WORK PACKAGES			I.5.2.3	<genrepairwp>
SPECIAL/FABRICATED TOOLS WORK PACKAGE			I.5.2.5	<bdartoolswp>
SUBSTITUTE MATRIALS/PARTS WORK PACKAGE			I.5.2.7	<substitute-matwp>

Source: https://assist.dla.mil -- Downloaded: 2016-12-09T23:32Z
Check the source to verify that this is the current version before use.

TABLE A-IV. TM Requirements Matrix for _____.

TM Content	-23 -23&P	-24 -24&P	MIL-STD-40051-2 Reference	Element Name
CHAPTER X. **SUPPORTING INFORMATION** ***NOTE*** *Applicable supporting information work packages shall be arranged in the order in which they are presented here and numbered accordingly.*	R	R	G.5.1	<sim>
REFERENCES WORK PACKAGE	R	R	G.5.2	<refwp>
INTRODUCTION FOR STANDARD TWO-LEVEL MAC WORK PACKAGE	R	R	G.5.3.1	<macintrowp>
STANDARD TWO-LEVEL MAC WORK PACKAGE	R	R	G.5.3.4	<macwp>
EXPENDABLE AND DURABLE ITEMS WORK PACKAGE	R	R	G.5.6	<explistwp>
TOOL IDENTIFICATION LIST WORK PACKAGE			G.5.7	<toolidwp>
MANDATORY REPLACEMENT PARTS WORK PACKAGE			G.5.8	<mrplwp>
CRITICAL SAFETY ITEMS AND FLIGHT SAFETY CRITICAL AIRCRAFT PARTS WORK PACKAGE			G.5.9	<csi.fscap.wp>
SUPPORT ITEMS WORK PACKAGE			G.5.10	<supitemwp>
ADDITIONAL SUPPORTING WORK PACKAGES			G.5.11	<genwp>
REAR MATTER	R	R	5.2.2	<rear>
Glossary			5.2.2.1	<glossary>
Alphabetical index			5.2.2.2	<aindx>
DA Form 2028	R	R	5.2.2.3	<da2028>
Authentication page	R	R	5.2.2.4	<authent>
Foldout pages			5.2.2.5	<foldsect>
Back cover	R	R	5.2.2.7	<back>

Legend
R Required
P Prohibited
Shaded As Required

Source: https://assist.dla.mil -- Downloaded: 2016-12-09T23:32Z
Check the source to verify that this is the current version before use.

TABLE A-V. TM Requirements Matrix for _____.

TM Content	AVIATION -23/-23&P	AVIATION -24/-24&P	MIL-STD-40051-2 Reference	Element Name
FRONT MATTER	R	R	5.2.1	<paper.frnt>
Front cover	R	R	5.2.1.1	<frntcover>
(MC) Promulgation letter			5.2.1.2	<promulgation>
Warning summary			5.2.1.3	<warnsum>
Change transmittal page			5.2.1.4	<chgsheet>
List of effective pages / work packages *(Excluding pocket TMs and publications with less than eight pages)*			5.2.1.5	<loepwp>
Title block page	R	R	5.2.1.6	<titleblk>
Table of contents	R	R	5.2.1.8	<contents>
How to use this manual	R	R	5.2.1.9	<howtouse>
CHAPTER 1. GENERAL INFORMATION, EQUIPMENT DESCRIPTION AND THEORY OF OPERATION	R	R	B.5.1	<gim>
GENERAL INFORMATION WORK PACKAGE	R	R	B.5.2	<ginfowp>
Scope	R	R	B.5.2.3	<scope>
Maintenance forms, records, and reports	R	R	B.5.2.4	<mfrr>
Reporting equipment improvement recommendations (EIR)	R	R	B.5.2.5	<eir>
Hand receipt (HR) manuals	P		B.5.2.6	<handreceipt>
Corrosion prevention and control (CPC)	R	R	B.5.2.7	<cpcdata>
Ozone depleting substances (ODS)			B.5.2.8	<odsdata>
Destruction of Army materiel to prevent enemy use	R	R	B.5.2.8	<destructmat>
Preparation for storage or shipment	R	R	B.5.2.10	<pssref>
Warranty information			B.5.2.11	<wrntyref>
Nomenclature cross-reference list			B.5.2.12	<nomenreflist>
List of abbreviations	R	R	B.5.2.13	<loa>
Quality Assurance (QA)			B.5.2.14	<qainfo>
Quality of material	R	R	B.5.2.15	<qual.mat.info>
Safety, care, and handling			B.5.2.16	<sftyinfo>
Nuclear hardness			B.5.2.17	<hcp>
Calibration			B.5.2.18	<calref>
Flight safety critical aircraft parts (FSCAP)	R	R	B.5.2.23	<fscapreq>
Supporting information for repair parts, special tools, TMDE, and support equipment			B.5.2.25	<supdata>
Copyright credit line			B.5.2.26	<copyrt>

Source: https://assist.dla.mil -- Downloaded: 2016-12-09T23:32Z
Check the source to verify that this is the current version before use.

TABLE A-V. TM Requirements Matrix for _____.

TM Content	AVIATION -23/-23&P	AVIATION -24/-24&P	MIL-STD-40051-2 Reference	Element Name
EQUIPMENT DESCRIPTION AND DATA WORK PACKAGE	R	R	B.5.3	<descwp>
Equipment characteristics, capabilities, and features	R	R	B.5.3.3	<eqpinfo>
Location and description of major components	R	R	B.5.3.4	<locdesc>
Differences between models			B.5.3.5	<eqpdiff>
Equipment data	R	R	B.5.3.6	<eqpdata>
THEORY OF OPERATION WORK PACKAGE	R	R	B.5.4	<thrywp>
CHAPTER X. TROUBLESHOOTING MASTER INDEX			D.5.1 D.5.4.4	<tim> <masterindexcategory>
TROUBLESHOOTING INDEX WORK PACKAGE	R	R	D.5.5.5	<tsindxwp>
CHAPTER X. TROUBLESHOOTING PROCEDURES ***NOTE*** *The notation (*) indicates that at least one of the these content items shall be included*	R	R	D.5.1 D.5.4.2	<tim> <troublecategory>
TROUBLESHOOTING INDEX WORK PACKAGE			D.5.5.5	<tsindxwp>
**OPERATIONAL CHECKOUT WORK PACKAGE*			D.5.5.8.3	<opcheckwp>
**TROUBLESHOOTING PROCEDURES WORK PACKAGE*			D.5.5.8.4	<tswp>
**COMBINED OPERATIONAL CHECKOUT AND TROUBLESHOOTING PROCEDURES WORK PACKAGE*			D.5.5.8.5	<opcheck-tswp>
CHAPTER X. AIRCRAFT MAINTENANCE INSTRUCTIONS	R	R	E.5.2 E.5.2.5	<mim> <aviationcategory>
SERVICE UPON RECEIPT WORK PACKAGE	R	R	E.5.3.2	<surwp>
Siting			E.5.3.2.3.1	<siting>
Shelter requirements	P		E.5.3.2.3.2	<shltr>
Service upon receipt of materiel	R	R	E.5.3.2.3.3	<surmat>
Installation instructions	R	R	E.5.3.2.3.4	<install>
Preliminary servicing of equipment			E.5.3.2.3.5	<preserv>
Preliminary checks and adjustment of equipment			E.5.3.2.3.6	<prechkadj>
Preliminary calibration of equipment			E.5.3.2.3.7	<precal>
Circuit alignment			E.5.3.2.3.8	<calign>

Source: https://assist.dla.mil -- Downloaded: 2016-12-09T23:32Z
Check the source to verify that this is the current version before use.

TABLE A-V. TM Requirements Matrix for _____.

TM Content	AVIATION -23/-23&P	AVIATION -24/-24&P	MIL-STD-40051-2 Reference	Element Name
Ammunition markings			E.5.3.2.3.9.1	<ammo.markings>
Classification of defects			E.5.3.2.3.9.2	<ammo.defect>
Ammunition handling			E.5.3.2.3.9.3	<ammo.handling>
Procedures to activate ammunition			E.5.3.2.3.9.4	<arm>
Additional maintenance task			E.5.3.2.3.10	<other.surtsk>
Follow-on maintenance			E.5.3.2.3.11	<followon.maintsk>
EQUIPMENT / USER FITTING INSTRUCTIONS WORK PACKAGE (PERSONAL USE EQUIPMENT)			E.5.3.3	<perseqpwp>
PREVENTIVE MAINTENANCE INSTRUCTIONS WORK PACKAGE			E.5.3.12.1	<pmiwp>
MAINTENANCE WORK PACKAGES ***NOTE*** *As applicable, the following maintenance tasks shall be presented in the general order listed below:*	R	R	E.5.3.5	<maintwp>
Assembly and preparation for use (aviation only)			E.5.3.5.3.2	<prepforuse>
Servicing			E.5.3.5.3.3	<service>
Ground handling			E.5.3.5.3.4	<groundtsk>
Inspection of installed items			E.5.3.5.3.5	<inspinstitm>
Removal			E.5.3.5.3.6	<remove>
Disassembly			E.5.3.5.3.7	<disassem>
Cleaning			E.5.3.5.3.8	<clean>
Inspection - acceptance and rejection criteria			E.5.3.5.3.9	<acptrejinsp>
Nondestructive testing inspection (NDTI)			E.5.3.5.3.10	<ndti>
Repair or replacement			E.5.3.5.3.11	<repair-rplc>
Alignment			E.5.3.5.3.12	<align>
Painting			E.5.3.5.3.13	<paint>
Lubrication			E.5.3.5.3.14	<lube>
Assembly			E.5.3.5.3.15	<assem>
Test and inspection			E.5.3.5.3.16	<test-inspect>
Installation			E.5.3.5.3.17	<install>
Adjustment			E.5.3.5.3.18	<adjust>
Calibration			E.5.3.5.3.19	<calibration>
Radio interference suppression			E.5.3.5.3.20	<ris>
Placing in service			E.5.3.5.3.21	<pis>
Testing			E.5.3.5.3.22	<test-pass>
Overhaul and retirement schedule (aircraft only)			E.5.3.5.3.24	<orsch>

Source: https://assist.dla.mil -- Downloaded: 2016-12-09T23:32Z
Check the source to verify that this is the current version before use.

TABLE A-V. TM Requirements Matrix for _____.

TM Content	AVIATION -23/-23&P	AVIATION -24/-24&P	MIL-STD-40051-2 Reference	Element Name
Preparation for storage or shipment			E.5.3.5.3.25	<pss>
Classification of defects			E.5.3.5.3.26	<ammo.defect>
Handling ammunition			E.5.3.5.3.27	<ammo.handling>
Ammunition markings			E.5.3.5.3.28	<ammo.markings>
Procedures for ammunition activation			E.5.3.5.3.29	<arm>
Additional maintenance task			E.5.3.5.3.30	<other.surtsk>
Follow-on maintenance			E.5.3.5.3.31	<followon.maintsk>
GENERAL MAINTENANCE WORK PACKAGE			E.5.3.6	<maintwp>
LUBRICATION INSTRUCTIONS WORK PACKAGE			E.5.3.7	<lubewp>
ILLUSTRATED LIST OF MANUFACTURED ITEMS WORK PACKAGE			**Error! Reference source not found.**	<manuwp>
Introduction			E.5.3.9.1	<intro>
Manufacturing procedures work package			E.5.3.9.2	<manfcprocwp>
TORQUE LIMITS WORK PACKAGE			E.5.3.10	<torquewp>
AIRCRAFT INVENTORY MASTER GUIDE WORK PACKAGE			E.5.3.12.2	< inventorywp>
STORAGE OF AIRCRAFT WORK PACKAGE			E.5.3.12.3	<storagewp>
WEIGHING AND LOADING WORK PACKAGE	R	R	E.5.3.12.4	<wtloadwp>
WIRING DIAGRAMS WORK PACKAGE			E.5.3.11	<wiringwp>
CHAPTER X. AUXILIARY EQUIPMENT MAINTENANCE INSTRUCTIONS			E.5.2 E.5.2.6	<mim> <auxiliarycategory>
AUXILIARY EQUIPMENT MAINTENANCE WORK PACKAGE			E.5.3.13	<auxeqpwp>
ILLUSTRATED LIST OF MANUFACTURED ITEMS WORK PACKAGE			**Error! Reference source not found.**	<manuwp>
Introduction			E.5.3.9.1	<intro>
Manufacturing procedures work package			E.5.3.9.2	<manfcprocwp>
TORQUE LIMITS WORK PACKAGE			E.5.3.10	<torquewp>
WIRING DIAGRAMS WORK PACKAGE			E.5.3.11	<wiringwp>
CHAPTER X. AMMUNITION MAINTENANCE INSTRUCTIONS			E.5.2 E.5.2.7	<mim> <ammunitioncategory>
AMMUNITION MAINTENANCE WORK PACKAGE			E.5.3.14.1	<ammowp>

Source: https://assist.dla.mil -- Downloaded: 2016-12-09T23:32Z
Check the source to verify that this is the current version before use.

TABLE A-V. TM Requirements Matrix for _____.

TM Content	AVIATION -23/-23&P	AVIATION -24/-24&P	MIL-STD-40051-2 Reference	Element Name
AMMUNITION MARKING INFORMATION WORK PACKAGE			E.5.3.14.2	<ammo.markingwp>
FOREIGN AMMUNITION (NATO) WORK PACKAGE			E.5.3.14.3	<natowp>
CHAPTER X. **PARTS INFORMATION** *(FIELD, FIELD/SUSTAINMENT)* *(FIELD&PFIELD/SUSTAINMENT&P)*	 P R	 P R	F.5.3.2	<pim>
INTRODUCTION WORK PACKAGE	R	R	F.5.3.5	<introwp>
REPAIR PARTS LIST WORK PACKAGE	R	R	F.5.3.6	<plwp>
REPAIR PARTS FOR SPECIAL TOOLS WORK PACKAGE			F.5.3.7	<stl_partswp>
KIT PARTS LIST WORK PACKAGE			F.5.3.8	<kitswp>
BULK ITEMS WORK PACKAGE			F.5.3.9	<bulk_itemswp>
SPECIAL TOOLS LIST WORK PACKAGE			F.5.3.10	<stlwp>
NSN INDEX WORK PACKAGE	R	R	F.5.3.11.1	<nsnindxwp>
P/N INDEX WORK PACKAGE	R	R	F.5.3.11.2	<pnindxwp>
REFERENCE DESIGNATOR INDEX WORK PACKAGE			F.5.3.11.3	<refdesindxwp>
CHAPTER X. **SUPPORTING INFORMATION** ***NOTE*** *Applicable supporting information work packages shall be arranged in the order in which they are presented here and numbered accordingly.*	R	R	G.5.1	<sim>
REFERENCES WORK PACKAGE	R	R	G.5.2	<refwp>
INTRODUCTION FOR AVIATION TWO-LEVEL MAC WORK PACKAGE	R	R	G.5.3.3A	<macintrowp>
AVIATION TWO-LEVEL MAC WORK PACKAGE	R	R	G.5.3.4	<macwp>
EXPENDABLE AND DURABLE ITEMS LIST WORK PACKAGE	R	R	G.5.6	<explistwp>
TOOL IDENTIFICATION LIST WORK PACKAGE			G.5.7	<toolidwp>
MANDATORY REPLACEMENT PARTS WORK PACKAGE			G.5.8	<mrplwp>

Source: https://assist.dla.mil -- Downloaded: 2016-12-09T23:32Z
Check the source to verify that this is the current version before use.

TABLE A-V. TM Requirements Matrix for _____.

TM Content	AVIATION -23/-23&P	AVIATION -24/-24&P	MIL-STD-40051-2 Reference	Element Name
CRITICAL SAFETY ITEMS (CSI) AND FLIGHT SAFETY CRITICAL AIRCRAFT PARTS (FSCAP) WORK PACKAGE			G.5.9	<csi.fscap.wp>
SUPPORT ITEMS WORK PACKAGE			G.5.10	<supitemwp>
ADDITIONAL SUPPORTING WORK PACKAGES			G.5.11	<genwp>
REAR MATTER	R	R	5.2.2	<rear>
Glossary			5.2.2.1	<glossary>
Alphabetical index			5.2.2.2	<aindx>
DA Form 2028	R	R	5.2.2.3	<da2028>
Authentication page	R	R	5.2.2.4	<authent>
Foldout pages			5.2.2.5	<foldsect>
Back cover	R	R	5.2.2.7	<back>

Legend
R Required
P Prohibited
Shaded As Required

Source: https://assist.dla.mil -- Downloaded: 2016-12-09T23:32Z
Check the source to verify that this is the current version before use.

TABLE A-VI. TM Requirements Matrix for _____.

TM Content	RPSTL	MIL-STD-40051-2 Reference	Element Name
FRONT MATTER	R	5.2.1	<paper.frnt>
Front cover	R	5.2.1.1	<frntcover>
(MC) Promulgation letter		5.2.1.2	<promulgation>
Change transmittal page	R	5.2.1.4	<chgsheet>
List of effective pages / work packages	R	5.2.1.5	<loepwp>
Title block page	R	5.2.1.6	<titleblk>
Table of contents	R	5.2.1.8	<contents>
CHAPTER 1. REPAIR PARTS AND SPECIAL TOOLS LIST FOR (ENTER EQUIPMENT NAME)	R	F.5.3.2	<pim>
INTRODUCTION WORK PACKAGE	R	F.5.3.5	<introwp>
REPAIR PARTS LIST WORK PACKAGES	R	F.5.3.6	<plwp>
REPAIR PARTS FOR SPECIAL TOOLS WORK PACKAGE		F.5.3.7	<stl_partswp>
KIT PARTS LIST WORK PACKAGE		F.5.3.8	<kitswp>
BULK ITEM WORK PACKAGE		F.5.3.9	<bulk_itemswp>
SPECIAL TOOLS LIST WORK PACKAGE		F.5.3.10	<stlwp>
NSN INDEX WORK PACKAGE	R	F.5.3.11.1	<nsnindxwp>
P/N INDEX WORK PACKAGE	R	F.5.3.11.2	<pnindxwp>
REFERENCE DESIGNATOR INDEX WORK PACKAGE		F.5.3.11.3	<refdesindxwp>
REAR MATTER	R	5.2.2	<rear>
DA Form 2028	R	5.2.2.3	<da2028>
Authentication page	R	5.2.2.4	<authent>
Back cover	R	5.2.2.7	<back>

Legend
R Required
P Prohibited
Shaded As Required

Source: https://assist.dla.mil -- Downloaded: 2016-12-09T23:32Z
Check the source to verify that this is the current version before use.

This page intentionally left blank.

Source: https://assist.dla.mil -- Downloaded: 2016-12-09T23:32Z
Check the source to verify that this is the current version before use.

TABLE A-VII. DMWR/NMWR Requirements Matrix for _____.

DMWR/NMWR Content	DMWR DMWR with RPSTL	NMWR NMWR with RPSTL	MIL-STD-40051-2 Reference	Element Name
FRONT MATTER	R	R	5.2.1	<paper.frnt>
Front cover	R	R	5.2.1.1	<frntcover>
(MC) Promulgation letter			5.2.1.2	<promulgation>
Warning summary			5.2.1.3	<warnsum>
Change transmittal page			5.2.1.4	<chgsheet>
List of effective pages / work packages	R	R	5.2.1.5	<loepwp>
Title block page	R	R	5.2.1.6	<titleblk>
Table of contents	R	R	5.2.1.8	<contents>
CHAPTER 1. GENERAL INFORMATION, EQUIPMENT DESCRIPTION AND THEORY OF OPERATION	R	R	B.5.1	<gim>
GENERAL INFORMATION WORK PACKAGE	R	R	B.5.2	<ginfowp>
Scope	R	R	B.5.2.3	<scope>
Maintenance forms, records, and reports	R	R	B.5.2.4	<mfrr>
Reporting equipment improvement recommendations (EIR)	R	R	B.5.2.5	<eir>
Corrosion prevention and control (CPC)	R	R	B.5.2.7	<cpcdata>
Ozone depleting substances (ODS)			B.5.2.8	<odsdata>
Destruction of Army materiel to prevent enemy use	R	R	B.5.2.8	<destructmat>
Preparation for storage or shipment	R	R	B.5.2.10	<pssref>
Warranty information			B.5.2.11	<wrntyref>
Nomenclature cross-reference list			B.5.2.12	<nomenreflist>
List of abbreviations/acronyms	R	R	B.5.2.13	<loa>
Quality assurance (QA)			B.5.2.14	<qainfo>
Quality of material	R	R	B.5.2.15	<qual.mat.info>
Safety, care, and handling			B.5.2.16	<sftyinfo>
Nuclear hardness			B.5.2.17	<hcp>
Calibration			B.5.2.18	<calref>
Engineering change proposals (ECP)	R	R	B.5.2.19	<ecp>
Modifications			B.5.2.20	<modification>
Deviations and exceptions	R	R	B.5.2.21	<deviation>
Mobilization requirements	R	R	B.5.2.22	<mobreq>
Flight safety critical aircraft parts (**Aircraft only**)			B.5.2.23	<fscapreq>
Cost considerations	R	R	B.5.2.24	<cost>

Source: https://assist.dla.mil -- Downloaded: 2016-12-09T23:32Z
Check the source to verify that this is the current version before use.

TABLE A-VII. DMWR/NMWR Requirements Matrix for _____.

DMWR/NMWR Content	DMWR DMWR with RPSTL	NMWR NMWR with RPSTL	MIL-STD-40051-2 Reference	Element Name
Supporting information for repair parts, special tools, TMDE, and support equipment			B.5.2.25	<supdata>
Copyright credit line			B.5.2.26	<copyrt>
EQUIPMENT DESCRIPTION AND DATA WORK PACKAGE	R	R	B.5.3	<descwp>
Equipment characteristics, capabilities, and features	R	R	B.5.3.3	<eqpinfo>
Location and description of major components	R	R	B.5.3.4	<locdesc>
Differences between models			B.5.3.5	<eqpdiff>
Equipment data	R	R	B.5.3.6	<eqpdata>
THEORY OF OPERATION WORK PACKAGES			B.5.4	<thrywp>
CHAPTER X. DMWR/NMWR TROUBLESHOOTING PROCEDURES			D.5.1 D.5.4.3	<tim> <troubledmwrnmwrcategory>
TROUBLESHOOTING INDEX WORK PACKAGE			D.5.5.5	<tsindxwp>
PRESHOP ANALYSIS WORK PACKAGE	R	R	D.5.5.6	<pshopanalwp>
COMPONENT CHECKLIST WORK PACKAGE			D.5.5.7	<compchklistwp>
OPERATIONAL CHECKOUT WORK PACKAGES			D.5.5.8.3	<opcheckwp>
TROUBLESHOOTING PROCEDURES WORK PACKAGES			D.5.5.8.4	<tswp>
COMBINED OPERATIONAL CHECKOUT AND TROUBLESHOOTING PROCEDURES WORK PACKAGES			D.5.5.8.5	<opcheck-tswp>
CHAPTER X. TROUBLESHOOTING PROCEDURES ***NOTE*** *The notation (*) indicates that, if required, at least one of the these content items shall be included*			D.5.1 D.5.4.2	<tim> <troublecategory>
TROUBLESHOOTING INDEX WORK PACKAGE			D.5.5.5	<tsindxwp>
**OPERATIONAL CHECKOUT WORK PACKAGES*			D.5.5.8.3	<opcheckwp>

Source: https://assist.dla.mil -- Downloaded: 2016-12-09T23:32Z
Check the source to verify that this is the current version before use.

TABLE A-VII. DMWR/NMWR Requirements Matrix for _____.

DMWR/NMWR Content	DMWR DMWR with RPSTL	NMWR NMWR with RPSTL	MIL-STD-40051-2 Reference	Element Name
**TROUBLESHOOTING PROCEDURES WORK PACKAGES*			D.5.5.8.4	<tswp>
**COMBINED OPERATIONAL CHECKOUT AND TROUBLESHOOTING PROCEDURES WORK PACKAGES*			D.5.5.8.5	<opcheck-tswp>
CHAPTER X. DEPOT MAINTENANCE INSTRUCTIONS	R	R	E.5.2 E.5.2.4	<mim> <depotcategory>
MAINTENANCE WORK PACKAGES ***NOTE*** *As applicable, the following maintenance tasks shall be presented in the general order listed below:*	R	R	E.5.3.5	<maintwp>
Assembly and preparation for use (aviation only)			E.5.3.5.3.2	<prepforuse>
Servicing			E.5.3.5.3.3	<service>
Ground handling			E.5.3.5.3.4	<groundtsk>
Inspection of installed items			E.5.3.5.3.5	<inspinstitm>
Removal			E.5.3.5.3.6	<remove>
Disassembly			E.5.3.5.3.7	<disassem>
Cleaning			E.5.3.5.3.8	<clean>
Inspection - acceptance and rejection criteria			E.5.3.5.3.9	<acptrejinsp>
Nondestructive testing inspection (NDTI)			E.5.3.5.3.10	<ndti>
Repair or replacement			E.5.3.5.3.11	<repair-rplc>
Alignment			E.5.3.5.3.12	<align>
Painting			E.5.3.5.3.13	<paint>
Lubrication			E.5.3.5.3.14	<lube>
Assembly			E.5.3.5.3.15	<assem>
Test and inspection			E.5.3.5.3.16	<test-inspect>
Installation			E.5.3.5.3.17	<install>
Adjustment			E.5.3.5.3.18	<adjust>
Calibration			E.5.3.5.3.19	<calibration>
Radio interference suppression			E.5.3.5.3.20	<ris>
Placing in service			E.5.3.5.3.21	<pis>
Testing			E.5.3.5.3.22	<test-pass>
Preservation, packaging, and marking	R	R	E.5.3.5.3.23	<ppm>
Overhaul and retirement schedule (aircraft only)			E.5.3.5.3.24	<orsch>

Source: https://assist.dla.mil -- Downloaded: 2016-12-09T23:32Z
Check the source to verify that this is the current version before use.

TABLE A-VII. DMWR/NMWR Requirements Matrix for _____.

DMWR/NMWR Content	DMWR DMWR with RPSTL	NMWR NMWR with RPSTL	MIL-STD-40051-2 Reference	Element Name
Preparation for storage or shipment			E.5.3.5.3.25	<pss>
Classification of defects			E.5.3.5.3.26	<ammo.defect>
Handling ammunition			E.5.3.5.3.27	<ammo.handling>
Ammunition markings			E.5.3.5.3.28	<ammo.markings>
Procedures for ammunition activation			E.5.3.5.3.29	<arm>
Additional maintenance task			E.5.3.5.3.30	<other.maintsk>
Follow-on maintenance			E.5.3.5.3.31	<followon.maintsk>
GENERAL MAINTENANCE WORK PACKAGE			E.5.3.6	<maintwp>
LUBRICATION INSTRUCTIONS WORK PACKAGE			E.5.3.7	<lubewp>
FACILITIES WORK PACKAGE			E.5.3.8.1	<facilwp>
OVERHAUL INSPECTION PROCEDURES WORK PACKAGE			E.5.3.8.2	<oipwp>
DEPOT MOBILIZATION REQUIREMENTS WORK PACKAGE			E.5.3.8.3	<mobilwp>
QUALITY ASSURANCE REQUIREMENTS WORK PACKAGE	R	R	E.5.3.8.4	<qawp>
ILLUSTRATED LIST OF MANUFACTURED ITEMS WORK PACKAGE			E.5.3.9	<manuwp>
Introduction			E.5.3.9.1	<intro>
Manufacturing procedures work package			E.5.3.9.2	<manfcprocwp>
TORQUE LIMITS WORK PACKAGE			E.5.3.10	<torquewp>
AIRCRAFT INVENTORY MASTER GUIDE WORK PACKAGE (AIRCRAFT ONLY)			E.5.3.12.2	< inventorywp>
STORAGE OF AIRCRAFT WORK PACKAGE WORK PACKAGE (AIRCRAFT ONLY)			E.5.3.12.3	<storagewp>
WEIGHING AND LOADING WORK PACKAGE (AIRCRAFT ONLY)			E.5.3.12.4	<wtloadwp>
WIRING DIAGRAMS WORK PACKAGE			E.5.3.11	<wiringwp>
CHAPTER X. AUXILIARY EQUIPMENT MAINTENANCE INSTRUCTIONS			E.5.2 E.5.2.6	<mim> <auxiliarycategory>
AUXILIARY EQUIPMENT MAINTENANCE WORK PACKAGE			E.5.3.13	<auxeqpwp>

Source: https://assist.dla.mil -- Downloaded: 2016-12-09T23:32Z
Check the source to verify that this is the current version before use.

TABLE A-VII. DMWR/NMWR Requirements Matrix for _____.

DMWR/NMWR Content	DMWR DMWR with RPSTL	NMWR NMWR with RPSTL	MIL-STD-40051-2 Reference	Element Name
ILLUSTRATED LIST OF MANUFACTURED ITEMS WORK PACKAGE			E.5.3.9	<manuwp>
Introduction			E.5.3.9.1	<intro>
Manufacturing procedures work package			E.5.3.9.2	<manfcprocwp>
TORQUE LIMITS WORK PACKAGE			E.5.3.10	<torquewp>
WIRING DIAGRAMS WORK PACKAGE			E.5.3.11	<wiringwp>
CHAPTER X. AMMUNITION MAINTENANCE INSTRUCTIONS			E.5.2 E.5.2.7	<mim> <ammunitioncategory>
AMMUNITION MAINTENANCE WORK PACKAGE			E.5.3.14.1	<ammowp>
AMMUNITION MARKING INFORMATION WORK PACKAGE			E.5.3.14.2	<ammo.markingwp>
FOREIGN AMMUNITION (NATO) WORK PACKAGE			E.5.3.14.3	<natowp>
CHAPTER X. PARTS INFORMATION *(DMWR, NMWR)* *(DMWR WITH RPSTL, NMWR WITH RPSTL)*	 P R	 P R	F.5.3.2	<pim>
INTRODUCTION WORK PACKAGE	R	R	F.5.3.5	<introwp>
REPAIR PARTS LIST WORK PACKAGE	R	R	F.5.3.6	<plwp>
REPAIR PARTS FOR SPECIAL TOOLS WORK PACKAGE			F.5.3.7	<stl_partswp>
KIT PARTS LIST WORK PACKAGE			F.5.3.8	<kitswp>
BULK ITEMS WORK PACKAGE			F.5.3.9	<bulk_itemswp>
SPECIAL TOOLS LIST WORK PACKAGE			F.5.3.10	<stlwp>
NSN INDEX WORK PACKAGE	R	R	F.5.3.11.1	<nsnindxwp>
P/N INDEX WORK PACKAGE	R	R	F.5.3.11.2	<pnindxwp>
REFERENCE DESIGNATOR INDEX WORK PACKAGE			F.5.3.11.3	<refdesindxwp>

Source: https://assist.dla.mil -- Downloaded: 2016-12-09T23:32Z
Check the source to verify that this is the current version before use.

TABLE A-VII. DMWR/NMWR Requirements Matrix for _____.

DMWR/NMWR Content	DMWR DMWR with RPSTL	NMWR NMWR with RPSTL	MIL-STD-40051-2 Reference	Element Name
CHAPTER X. SUPPORTING INFORMATION ***NOTE*** *Applicable supporting information work packages shall be arranged in the order in which they are presented here and numbered accordingly.*	R	R	G.5.1	<sim>
REFERENCES WORK PACKAGE	R	R	G.5.2	<refwp>
EXPENDABLE AND DURABLE ITEMS LIST WORK PACKAGE	R	R	G.5.6	<explistwp>
TOOL IDENTIFICATION LIST WORK PACKAGE			G.5.7	<toolidwp>
MANDATORY REPLACEMENT PARTS WORK PACKAGE			G.5.8	<mrplwp>
CRITICAL SAFETY ITEMS (CSI) AND FLIGHT SAFETY CRITICAL AIRCRAFT PARTS (FSCAP) WORK PACKAGE			G.5.9	<csi.fscap.wp>
SUPPORT ITEMS WORK PACKAGE			G.5.10	<supitemwp>
ADDITIONAL SUPPORTING WORK PACKAGES			G.5.11	<genwp>
REAR MATTER	R	R	5.2.2	<rear>
Glossary			5.2.2.1	<glossary>
Alphabetical index			5.2.2.2	<aindx>
DA Form 2028	R	R	5.2.2.3	<da2028>
Authentication page	R	R	5.2.2.4	<authent>
Foldout pages			5.2.2.5	<foldsect>
Back cover	R	R	5.2.2.7	<back>

Legend
R Required
P Prohibited
Shaded As Required

Source: https://assist.dla.mil -- Downloaded: 2016-12-09T23:32Z
Check the source to verify that this is the current version before use.

TABLE A-VIII. DMWR/NMWR Requirements Matrix for _____.

DMWR/NMWR Content	DMWR with Overhaul Standards	DMWR with Overhaul Standards with RPSTL	MIL-STD-40051-2 Reference	Element Name
FRONT MATTER	R	R	5.2.1	<paper.frnt>
Front cover	R	R	5.2.1.1	<frntcover>
(MC) Promulgation letter			5.2.1.2	<promulgation>
Warning summary			5.2.1.3	<warnsum>
Change transmittal page			5.2.1.4	<chgsheet>
List of effective pages / work packages	R	R	5.2.1.5	<loepwp>
Title block page	R	R	5.2.1.6	<titleblk>
Table of contents	R	R	5.2.1.8	<contents>
CHAPTER 1. GENERAL INFORMATION, EQUIPMENT DESCRIPTION AND THEORY OF OPERATION	R	R	B.5.1	<gim>
GENERAL INFORMATION WORK PACKAGE	R	R	B.5.2	<ginfowp>
Scope	R	R	B.5.2.3	<scope>
Maintenance forms, records, and reports	R	R	B.5.2.4	<mfrr>
Reporting equipment improvement recommendations (EIR)	R	R	B.5.2.5	<eir>
Corrosion prevention and control (CPC)	R	R	B.5.2.7	<cpcdata>
Ozone depleting substances (ODS)			B.5.2.8	<odsdata>
Destruction of Army materiel to prevent enemy use	R	R	B.5.2.8	<destructmat>
Preparation for storage or shipment	R	R	B.5.2.10	<pssref>
Warranty information			B.5.2.11	<wrntyref>
Nomenclature cross-reference list			B.5.2.12	<nomenreflist>
List of abbreviations/acronyms	R	R	B.5.2.13	<loa>
Quality assurance (QA)			B.5.2.14	<qainfo>
Quality of material	R	R	B.5.2.15	<qual.mat.info>
Safety, care, and handling			B.5.2.16	<sftyinfo>
Nuclear hardness			B.5.2.17	<hcp>
Calibration			B.5.2.18	<calref>
Engineering change proposals (ECP)	R	R	B.5.2.19	<ecp>
Modifications			B.5.2.20	<modification>
Deviations and exceptions	R	R	B.5.2.21	<deviation>
Mobilization requirements	R	R	B.5.2.22	<mobreq>
Flight safety critical aircraft parts (**Aircraft only**)			B.5.2.23	<fscapreq>
Cost considerations	R	R	B.5.2.24	<cost>
Supporting information for repair parts, special tools, TMDE, and support equipment			B.5.2.25	<supdata>
Copyright credit line			B.5.2.26	<copyrt>

Source: https://assist.dla.mil -- Downloaded: 2016-12-09T23:32Z
Check the source to verify that this is the current version before use.

TABLE A-VIII. DMWR/NMWR Requirements Matrix for _____.

DMWR/NMWR Content	DMWR with Overhaul Standards	DMWR with Overhaul Standards with RPSTL	MIL-STD-40051-2 Reference	Element Name
EQUIPMENT DESCRIPTION AND DATA WORK PACKAGE	R	R	B.5.3	<descwp>
Equipment characteristics, capabilities, and features	R	R	B.5.3.3	<eqpinfo>
Location and description of major components	R	R	B.5.3.4	<locdesc>
Differences between models			B.5.3.5	<eqpdiff>
Equipment data	R	R	B.5.3.6	<eqpdata>
THEORY OF OPERATION WORK PACKAGES			B.5.4	<thrywp>
CHAPTER X. DEPOT TROUBLESHOOTING PROCEDURES			D.5.1 D.5.4.3	<tim> <troubledmwrnmwrcategory>
TROUBLESHOOTING INDEX WORK PACKAGE			D.5.5.5	<tsindxwp>
PRESHOP ANALYSIS WORK PACKAGE	R	R	D.5.5.6	<pshopanalwp>
COMPONENT CHECKLIST WORK PACKAGE			D.5.5.7	<compchklistwp>
OPERATIONAL CHECKOUT WORK PACKAGES			D.5.5.8.3	<opcheckwp>
TROUBLESHOOTING PROCEDURES WORK PACKAGES			D.5.5.8.4	<tswp>
COMBINED OPERATIONAL CHECKOUT AND TROUBLESHOOTING PROCEDURES WORK PACKAGES			D.5.5.8.5	<opcheck-tswp>
CHAPTER X. TROUBLESHOOTING PROCEDURES ***NOTE*** *The notation (*) indicates that at least one of the these content items shall be included*			D.5.1 D.5.4.2	<tim> <troublecategory>
TROUBLESHOOTING INDEX WORK PACKAGE			D.5.5.5	<tsindxwp>
**OPERATIONAL CHECKOUT WORK PACKAGES*			D.5.5.8.3	<opcheckwp>
**TROUBLESHOOTING PROCEDURES WORK PACKAGES*			D.5.5.8.4	<tswp>
**COMBINED OPERATIONAL CHECKOUT AND TROUBLESHOOTING PROCEDURES WORK PACKAGES*			D.5.5.8.5	<opcheck-tswp>

Source: https://assist.dla.mil -- Downloaded: 2016-12-09T23:32Z
Check the source to verify that this is the current version before use.

TABLE A-VIII. DMWR/NMWR Requirements Matrix for _____.

DMWR/NMWR Content	DMWR with Overhaul Standards	DMWR with Overhaul Standards with RPSTL	MIL-STD-40051-2 Reference	Element Name
CHAPTER X. **DEPOT** **MAINTENANCE INSTRUCTIONS**	R	R	E.5.2 E.5.2.4	<mim> <depotcategory>
MAINTENANCE WORK PACKAGES ***NOTE*** *As applicable, the following maintenance tasks shall be presented in the general order listed below:*	R	R	E.5.3.5	<maintwp>
Assembly and preparation for use (aviation only)			E.5.3.5.3.2	<prepforuse>
Servicing			E.5.3.5.3.3	<service>
Ground handling			E.5.3.5.3.4	<groundtsk>
Inspection of installed items			E.5.3.5.3.5	<inspinstitm>
Removal			E.5.3.5.3.6	<remove>
Disassembly			E.5.3.5.3.7	<disassem>
Cleaning			E.5.3.5.3.8	<clean>
Inspection - acceptance and rejection criteria			E.5.3.5.3.9	<acptrejinsp>
Nondestructive testing inspection (NDTI)			E.5.3.5.3.10	<ndti>
Repair or replacement			E.5.3.5.3.11	<repair-rplc>
Alignment			E.5.3.5.3.12	<align>
Painting			E.5.3.5.3.13	<paint>
Lubrication			E.5.3.5.3.14	<lube>
Assembly			E.5.3.5.3.15	<assem>
Test and inspection			E.5.3.5.3.16	<test-inspect>
Installation			E.5.3.5.3.17	<install>
Adjustment			E.5.3.5.3.18	<adjust>
Calibration			E.5.3.5.3.19	<calibration>
Radio interference suppression			E.5.3.5.3.20	<ris>
Placing in service			E.5.3.5.3.21	<pis>
Testing			E.5.3.5.3.22	<test-pass>
Preservation, packaging, and marking	R	R	E.5.3.5.3.23	<ppm>
Overhaul and retirement schedule (aircraft only)			E.5.3.5.3.24	<orsch>
Preparation for storage or shipment			E.5.3.5.3.25	<pss>
Classification of defects			E.5.3.5.3.26	<ammo.defect>
Handling ammunition			E.5.3.5.3.27	<ammo.handling>
Ammunition markings			E.5.3.5.3.28	<ammo.markings>
Procedures for ammunition activation			E.5.3.5.3.29	<arm>
Additional maintenance task			E.5.3.5.3.30	<other.maintsk>
Follow-on maintenance			E.5.3.5.3.31	<followon.maintsk>

Source: https://assist.dla.mil -- Downloaded: 2016-12-09T23:32Z
Check the source to verify that this is the current version before use.

TABLE A-VIII. DMWR/NMWR Requirements Matrix for _____.

DMWR/NMWR Content	DMWR with Overhaul Standards	DMWR with Overhaul Standards with RPSTL	MIL-STD-40051-2 Reference	Element Name
GENERAL MAINTENANCE WORK PACKAGE			E.5.3.6	<maintwp>
LUBRICATION INSTRUCTIONS WORK PACKAGE			E.5.3.7	<lubewp>
FACILITIES WORK PACKAGE			E.5.3.8.1	<facilwp>
OVERHAUL INSPECTION PROCEDURES WORK PACKAGE			E.5.3.8.2	<oipwp>
DEPOT MOBILIZATION REQUIREMENTS WORK PACKAGE	R	R	E.5.3.8.3	<mobilwp>
QUALITY ASSURANCE REQUIREMENTS WORK PACKAGE	R	R	E.5.3.8.4	<qawp>
ILLUSTRATED LIST OF MANUFACTURED ITEMS WORK PACKAGE			E.5.3.9	<manuwp>
Introduction			E.5.3.9.1	<intro>
Manufacturing procedures work package			E.5.3.9.2	<manfcprocwp>
TORQUE LIMITS WORK PACKAGE			E.5.3.10	<torquewp>
AIRCRAFT INVENTORY MASTER GUIDE WORK PACKAGE (AIRCRAFT ONLY)			E.5.3.12.2	<inventorywp>
STORAGE OF AIRCRAFT WORK PACKAGE WORK PACKAGE (AIRCRAFT ONLY)			E.5.3.12.3	<storagewp>
WEIGHING AND LOADING WORK PACKAGE (AIRCRAFT ONLY)			E.5.3.12.4	<wtloadwp>
WIRING DIAGRAMS WORK PACKAGE			E.5.3.11	<wiringwp>
CHAPTER X. AUXILIARY EQUIPMENT MAINTENANCE INSTRUCTIONS			E.5.2 E.5.2.6	<mim> <auxiliarycategory>
AUXILIARY EQUIPMENT MAINTENANCE WORK PACKAGE			E.5.3.13	<auxeqpwp>
ILLUSTRATED LIST OF MANUFACTURED ITEMS WORK PACKAGE			E.5.3.9	<manuwp>
Introduction			E.5.3.9.1	<intro>
Manufacturing procedures work package			E.5.3.9.2	<manfcprocwp>
TORQUE LIMITS WORK PACKAGE			E.5.3.10	<torquewp>
WIRING DIAGRAMS WORK PACKAGE			E.5.3.11	<wiringwp>
CHAPTER X. AMMUNITION MAINTENANCE INSTRUCTIONS			E.5.2 E.5.2.7	<mim> <ammunitioncategory>
AMMUNITION MAINTENANCE WORK PACKAGE			E.5.3.14.1	<ammowp>

Source: https://assist.dla.mil -- Downloaded: 2016-12-09T23:32Z
Check the source to verify that this is the current version before use.

TABLE A-VIII. DMWR/NMWR Requirements Matrix for _____.

DMWR/NMWR Content	DMWR with Overhaul Standards	DMWR with Overhaul Standards with RPSTL	MIL-STD-40051-2 Reference	Element Name
AMMUNITION MARKING INFORMATION WORK PACKAGE			E.5.3.14.2	<ammo.markingwp>
FOREIGN AMMUNITION (NATO) WORK PACKAGE			E.5.3.14.3	<natowp>
CHAPTER X. **PARTS INFORMATION** *(DMWR WITH OVERHAUL STANDARDS)* *(DMWR WITH OVERHAUL STANDARDS WITH RPSTL)*	 P R	 P R	F.5.3.2	<pim>
INTRODUCTION WORK PACKAGE	R	R	F.5.3.5	<introwp>
REPAIR PARTS LIST WORK PACKAGE	R	R	F.5.3.6	<plwp>
REPAIR PARTS FOR SPECIAL TOOLS WORK PACKAGE			F.5.3.7	<stl_partswp>
KIT PARTS LIST WORK PACKAGE			F.5.3.8	<kitswp>
BULK ITEMS WORK PACKAGE			F.5.3.9	<bulk_itemswp>
SPECIAL TOOLS LIST WORK PACKAGE			F.5.3.10	<stlwp>
NSN INDEX WORK PACKAGE	R	R	F.5.3.11.1	<nsnindxwp>
P/N INDEX WORK PACKAGE	R	R	F.5.3.11.2	<pnindxwp>
REFERENCE DESIGNATOR INDEX WORK PACKAGE			F.5.3.11.3	<refdesindxwp>
CHAPTER X. **SUPPORTING INFORMATION** ***NOTE*** *Applicable supporting information work packages shall be arranged in the order in which they are presented here and numbered accordingly.*	R	R	G.5.1	<sim>
REFERENCES WORK PACKAGE	R	R	G.5.2	<refwp>
EXPENDABLE AND DURABLE ITEMS LIST WORK PACKAGE	R	R	G.5.6	<explistwp>
TOOL IDENTIFICATION LIST WORK PACKAGE			G.5.7	<toolidwp>
MANDATORY REPLACEMENT PARTS WORK PACKAGE			G.5.8	<mrplwp>
CRITICAL SAFETY ITEMS (CSI) AND FLIGHT SAFETY CRITICAL AIRCRAFT PARTS (FSCAP) WORK PACKAGE			G.5.9	<csi.fscap.wp>
SUPPORT ITEMS WORK PACKAGE			G.5.10	<supitemwp>
ADDITIONAL SUPPORTING WORK PACKAGES			G.5.11	<genwp>

Source: https://assist.dla.mil -- Downloaded: 2016-12-09T23:32Z
Check the source to verify that this is the current version before use.

TABLE A-VIII. DMWR/NMWR Requirements Matrix for _____.

DMWR/NMWR Content	DMWR with Overhaul Standards	DMWR with Overhaul Standards with RPSTL	MIL-STD-40051-2 Reference	Element Name
REAR MATTER	R	R	5.2.2	<rear>
Glossary			5.2.2.1	<glossary>
Alphabetical index			5.2.2.2	<aindx>
DA Form 2028	R	R	5.2.2.3	<da2028>
Authentication page	R	R	5.2.2.4	<authent>
Foldout pages			5.2.2.5	<foldsect>
Back cover	R	R	5.2.2.7	<back>

Legend
R Required
P Prohibited
Shaded As Required

Source: https://assist.dla.mil -- Downloaded: 2016-12-09T23:32Z
Check the source to verify that this is the current version before use.

TABLE A-IX. TM Requirements Matrix for _____.

TM Content	Aircraft Troubleshooting	MIL-STD-40051-2 Reference	Element Name
FRONT MATTER	R	5.2.1	<paper.frnt>
Front cover	R	5.2.1.1	<frntcover>
Warning summary		5.2.1.3	<warnsum>
Change transmittal		5.2.1.4	<chgsheet>
List of effective pages / work packages	R	5.2.1.5	<loepwp>
Title block page	R	5.2.1.6	<titleblk>
Table of contents	R	5.2.1.8	<contents>
How to use this manual	R	5.2.1.9	<howtouse>
CHAPTER X. **AVIATION** **TROUBLESHOOTING PROCEDURES** ***NOTE*** *The notation (*) indicates that at least one of the these content items shall be included*	R	D.5.1 D.5.4.1	<tim> <troubleaviationcategory>
INTRODUCTION WORK PACKAGE	R	D.5.5.3	<tsintrowp>
TECHNICAL DESCRIPTION WORK PACKAGE		D.5.5.4	<techdescwp >
Equipment description and data		D.5.5.4.3	<descproc>
Controls and indicators		D.5.5.4.4	<ctrlindproc>
Theory of operation		D.5.5.4.5	<thryproc>
TROUBLESHOOTING INDEX WORK PACKAGE		D.5.5.5	<tsindxwp>
**OPERATIONAL CHECKOUT WORK PACKAGES*		D.5.5.8.3	<opcheckwp>
**TROUBLESHOOTING PROCEDURES WORK PACKAGES*		D.5.5.8.4	<tswp>
**COMBINED OPERATIONAL CHECKOUT AND TROUBLESHOOTING PROCEDURES WORK PACKAGES*		D.5.5.8.5	<opcheck-tswp>
REAR MATTER	R	5.2.2	<rear>
Glossary		5.2.2.1	<glossary>
Alphabetical index		5.2.2.2	<aindx>
DA Form 2028	R	5.2.2.3	<da2028>
Authentication page	R	5.2.2.4	<authent>
Foldout pages		5.2.2.5	<foldsect>
Back cover	R	5.2.2.7	<back>

Legend
R Required
P Prohibited
Shaded As Required

Source: https://assist.dla.mil -- Downloaded: 2016-12-09T23:32Z
Check the source to verify that this is the current version before use.

This page intentionally left blank.

Source: https://assist.dla.mil -- Downloaded: 2016-12-09T23:32Z
Check the source to verify that this is the current version before use.

TABLE A-X. TM Requirements Matrix for _____.

TM Content	Aircraft PMS/PMD	MIL-STD-40051-2 Reference	Element Name
FRONT MATTER	R	5.2.1	<pm.frnt>
Front cover	R	5.2.1.1	<frntcover>
Warning summary		5.2.1.3	<warnsum>
Change transmittal page		5.2.1.4	<chgsheet>
List of effective pages / work packages	R	5.2.1.5	<loepwp>
Title block page with warning data	R	5.2.1.6 5.2.1.7	<titleblk>
CHAPTER 1. GENERAL INFORMATION	R	B.5.1	<gim>
GENERAL INFORMATION WORK PACKAGE	R	B.5.5	<pms-ginfowp>
Maintenance activities	R	B.5.5.3	<scope>
General information	R	B.5.5.4	<geninfo>
CHAPTER X. PREVENTIVE MAINTENANCE SERVICES MAINTENANCE INFORMATION CHAPTER	R	E.5.2 E.5.2.11	<mim> <pmscategory>
PMS/PMD INSPECTION WORK PACKAGE	R	E.5.3.15	<pms-inspecwp>
REAR MATTER	R	5.2.2	<rear>
DA Form 2028	R	5.2.2.3	<da2028>
Authentication page	R	5.2.2.4	<authent>
Back cover	R	5.2.2.7	<back>

Legend
R Required
P Prohibited
Shaded As Required

Source: https://assist.dla.mil -- Downloaded: 2016-12-09T23:32Z
Check the source to verify that this is the current version before use.

This page intentionally left blank.

Source: https://assist.dla.mil -- Downloaded: 2016-12-09T23:32Z
Check the source to verify that this is the current version before use.

TABLE A-XI. TM Requirements Matrix for _____.

TM Content	Aircraft PM	MIL-STD-40051-2 Reference	Element Name
FRONT MATTER	R	5.2.1	<pm.frnt>
Front cover	R	5.2.1.1	<frntcover>
Warning summary		5.2.1.3	<warnsum>
Change transmittal page		5.2.1.4	<chgsheet>
List of effective pages / work packages	R	5.2.1.5	<loepwp>
Title block page with warning data	R	5.2.1.6 5.2.1.7	<titleblk>
CHAPTER 1. GENERAL INFORMATION	R	B.5.1	<gim>
GENERAL INFORMATION WORK PACKAGE	R	B.5.6	<pm-ginfowp>
CHAPTER X. PHASED MAINTENANCE INSPECTION MAINTENANCE INFORMATION	R	E.5.2 E.5.2.12	<mim> <checklistcategory>
PM INSPECTION WORK PACKAGE	R	E.5.3.15.3	<pmi-cklistwp>
General inspection		E.5.3.16.4	<geninspec>
Aircraft area inspection		E.5.3.16.4	<areainspec>
Aircraft power on checks		E.5.3.16.4	<pwron-inspec>
Aircraft final inspection		E.5.3.16.4	<finalinspec>
REAR MATTER	R	5.2.2	<rear>
DA Form 2028	R	5.2.2.3	<da2028>
Authentication page	R	5.2.2.4	<authent>
Back cover	R	5.2.2.7	<back>

Legend
R Required
P Prohibited
Shaded As Required

Source: https://assist.dla.mil -- Downloaded: 2016-12-09T23:32Z
Check the source to verify that this is the current version before use.

This intentionally left blank.

Source: https://assist.dla.mil -- Downloaded: 2016-12-09T23:32Z
Check the source to verify that this is the current version before use.

TABLE A-XII. TM Requirements Matrix for _____.

TM Content	Conventional and Chemical Ammunition			MIL-STD-40051-2 Reference	Element Name
	-10	-13 -13&P	-14 -14&P		
FRONT MATTER	R	R	R	5.2.1	<paper.frnt>
Front cover	R	R	R	5.2.1.1	<frntcover>
Warning summary				5.2.1.3	<warnsum>
Change transmittal page				5.2.1.4	<chgsheet>
List of effective pages/work packages	R	R	R	5.2.1.5	<loepwp>
Title block page	R	R	R	5.2.1.6	<titleblk>
Table of contents	R	R	R	5.2.1.8	<contents>
How to use this manual	R	R	R	5.2.1.9	<howtouse>
CHAPTER 1. GENERAL INFORMATION, EQUIPMENT DESCRIPTION AND THEORY OF OPERATION	R	R	R	B.5.1	<gim>
GENERAL INFORMATION WORK PACKAGE	R	R	R	B.5.2	<ginfowp>
Scope	R	R	R	B.5.2.3	<scope>
Maintenance forms, records, and reports	R	R	R	B.5.2.4	<mfrr>
Reporting equipment improvement recommendations (EIR)	R	R	R	B.5.2.5	<eir>
Hand receipt (HR) manuals				B.5.2.6	<handreceipt>
Corrosion prevention and control (CPC)	R	R	R	B.5.2.7	<cpcdata>
Ozone depleting substances (ODS)				B.5.2.8	<odsdata>
Destruction of Army materiel to prevent enemy use	R	R	R	B.5.2.8	<destructmat>
Preparation for storage or shipment	R	R	R	B.5.2.10	<pssref>
Warranty information				B.5.2.11	<wrntyref>
Nomenclature cross-reference list				B.5.2.12	<nomenreflist>
List of abbreviations/acronyms	R	R	R	B.5.2.13	<loa>
Quality of material	P			B.5.2.15	<qual.mat.info>
Safety, care, and handling				B.5.2.16	<sftyinfo>
Nuclear hardness				B.5.2.17	<hcp>
Calibration				B.5.2.18	<calref>
Supporting information for repair parts, special tools, TMDE, and support equipment	P			B.5.2.25	<supdata>
Copyright credit line				B.5.2.26	<copyrt>

Source: https://assist.dla.mil -- Downloaded: 2016-12-09T23:32Z
Check the source to verify that this is the current version before use.

TABLE A-XII. TM Requirements Matrix for _____.

TM Content	Conventional and Chemical Ammunition			MIL-STD-40051-2 Reference	Element Name
	-10	-13 -13&P	-14 -14&P		
EQUIPMENT DESCRIPTION AND DATA WORK PACKAGE	R	R	R	B.5.3	<descwp>
Equipment characteristics, capabilities, and features	R	R	R	B.5.3.3	<eqpinfo>
Location and description of major components				B.5.3.4	<locdesc>
Differences between models				B.5.3.5	<eqpdiff>
Equipment data	R	R	R	B.5.3.6	<eqpdata>
CHAPTER X. OPERATOR INSTRUCTIONS	R	R	R	C.5.1	<opim>
DESCRIPTION AND USE OF OPERATOR CONTROLS AND INDICATORS WORK PACKAGE	R	R	R	C.5.2.3	<ctrlindwp>
OPERATION UNDER USUAL CONDITIONS WORK PACKAGE	R	R	R	C.5.2.4	<opusualwp>
Security measures for electronic data				C.5.2.4.3	<secref>
Siting requirements				C.5.2.4.4	<site>
Shelter requirements				C.5.2.4.5	<shelter>
Assembly and preparation for use				C.5.2.4.6	<prepforuse>
Initial adjustments, before use and self-test				C.5.2.4.7	<initial>
Operating procedures	R	R	R	C.5.2.4.8	<oper>
Decals and instruction plates				C.5.2.4.8.2	<instructplt>
Operating auxiliary equipment				C.5.2.4.9	<operaux>
Preparation for movement				C.5.2.4.10	<prepmove>
OPERATION UNDER UNUSUAL CONDITIONS WORK PACKAGE	R	R	R	C.5.2.5	<opunuwp>
Security measures for electronic data				C.5.2.5.3.1	<secref>
Unusual environment / weather	R	R	R	C.5.2.5.3.2	<unusualenv>
Fording and swimming				C.5.2.5.3.3	<fording>
Interim nuclear, biological, and chemical (NBC) decontamination procedures				C.5.2.5.3.4	<decon>
Jamming and electronic countermeasures (ECM) procedures				C.5.2.5.3.5	<ecm>
Degraded operation procedures				C.5.2.5.3.6	<degraded>
EMERGENCY WORK PACKAGE				C.5.2.6	<emergencywp>
STOWAGE AND DECAL / DATA PLATE GUIDE WORK PACKAGE				C.5.2.7	<stowagewp>

Source: https://assist.dla.mil -- Downloaded: 2016-12-09T23:32Z
Check the source to verify that this is the current version before use.

TABLE A-XII. TM Requirements Matrix for _____.

TM Content	Conventional and Chemical Ammunition			MIL-STD-40051-2 Reference	Element Name
	-10	-13 -13&P	-14 -14&P		
ON-VEHICLE EQUIPMENT LOADING PLAN WORK PACKAGE				C.5.2.8	<eqploadwp>
CHAPTER X. MAINTENANCE INSTRUCTIONS ***NOTE*** *PMCS is required as a minimum in one maintenance chapter*	R	R	R	E.5.2 E.5.2.2 E.5.2.3	<mim> <maintenancepmcscategory> <maintenancecategory>
SERVICE UPON RECEIPT WORK PACKAGE	P	R	R	E.5.3.2	<surwp>
Siting	P			E.5.3.2.3.1	<siting>
Shelter requirements	P			E.5.3.2.3.2	<shltr>
Service upon receipt of materiel	P	R	R	E.5.3.2.3.3	<surmat>
Installation instructions	P	R	R	E.5.3.2.3.4	<install>
Preliminary servicing of equipment	P			E.5.3.2.3.5	<preserv>
Preliminary checks and adjustment of equipment	P			E.5.3.2.3.6	<prechkadj>
Preliminary calibration of equipment	P			E.5.3.2.3.7	<precal>
Circuit alignment	P			E.5.3.2.3.8	<calign>
Ammunition markings	P			E.5.3.2.3.9.1	<ammo.markings>
Classification of defects	P			E.5.3.2.3.9.2	<ammo.defect>
Ammunition handling	P			E.5.3.2.3.9.3	<ammo.handling>
Procedures to activate ammunition	P			E.5.3.2.3.9.4	<arm>
Additional service upon receipt task	P			E.5.3.2.3.10	<other.surtsk>
Follow-on maintenance	P			E.5.3.2.3.11	<followon.maintsk>
MAINTENANCE WORK PACKAGES ***NOTE*** *As applicable, the following maintenance tasks shall be presented in the general order listed below:*	R	R	R	E.5.3.5	<maintwp>
Servicing				E.5.3.5.3.3	<service>
Ground handling				E.5.3.5.3.4	<groundtsk>
Inspection of installed items				E.5.3.5.3.5	<inspinstitm>
Removal				E.5.3.5.3.6	<remove>
Disassembly				E.5.3.5.3.7	<disassem>
Cleaning				E.5.3.5.3.8	<clean>
Inspection - acceptance and rejection criteria				E.5.3.5.3.9	<acptrejinsp>
Nondestructive testing inspection (NDTI)				E.5.3.5.3.10	<ndti>
Repair or replacement				E.5.3.5.3.11	<repair-rplc>

Source: https://assist.dla.mil -- Downloaded: 2016-12-09T23:32Z
Check the source to verify that this is the current version before use.

TABLE A-XII. TM Requirements Matrix for _____.

TM Content	Conventional and Chemical Ammunition			MIL-STD-40051-2 Reference	Element Name
	-10	-13 -13&P	-14 -14&P		
Alignment				E.5.3.5.3.12	<align>
Painting				E.5.3.5.3.13	<paint>
Lubrication				E.5.3.5.3.14	<lube>
Assembly				E.5.3.5.3.15	<assem>
Test and inspection				E.5.3.5.3.16	<test-inspect>
Installation				E.5.3.5.3.17	<install>
Adjustment				E.5.3.5.3.18	<adjust>
Calibration				E.5.3.5.3.19	<calibration>
Radio interference suppression				E.5.3.5.3.20	<ris>
Placing in service				E.5.3.5.3.21	<pis>
Testing				E.5.3.5.3.22	<test-pass>
Preparation for storage or shipment				E.5.3.5.3.25	<pss>
Classification of defects				E.5.3.5.3.26	<ammo.defect>
Handling ammunition				E.5.3.5.3.27	<ammo.handling>
Ammunition markings				E.5.3.5.3.28	<ammo.markings>
Procedures for ammunition activation				E.5.3.5.3.29	<arm>
Additional maintenance task				E.5.3.5.3.30	<other.maintsk>
Follow-on maintenance				E.5.3.5.3.31	<followon.maintsk>
GENERAL MAINTENANCE WORK PACKAGE				E.5.3.6	<maintwp>
LUBRICATION INSTRUCTIONS WORK PACKAGE				E.5.3.7	<lubewp>
ILLUSTRATED LIST OF MANUFACTURED ITEMS WORK PACKAGE				E.5.3.9	<manuwp>
Introduction				E.5.3.9.1	<intro>
Manufacturing procedures work package				E.5.3.9.2	<manfcprocwp>
TORQUE LIMITS WORK PACKAGE	P			E.5.3.10	<torquewp>
WIRING DIAGRAMS WORK PACKAGE	P			E.5.3.11	<wiringwp>
CHAPTER X. TEST AND INSPECTION MAINTENANCE INSTRUCTIONS	P			E.5.2 E.5.2.8	<mim> <testinspectioncategory>
MAINTENANCE WORK PACKAGES	P	R	R	E.5.3.5	<maintwp>
Test and inspection	P	R	R	E.5.3.5.3.16	<test-inspect>

Source: https://assist.dla.mil -- Downloaded: 2016-12-09T23:32Z
Check the source to verify that this is the current version before use.

TABLE A-XII. TM Requirements Matrix for _____.

TM Content	Conventional and Chemical Ammunition			MIL-STD-40051-2 Reference	Element Name
	-10	-13 -13&P	-14 -14&P		
CHAPTER X. **SHIPMENT/MOVEMENT AND STORAGE MAINTENANCE INSTRUCTIONS**	P	R	R	E.5.2 E.5.2.9	<mim> <shipmentmovementstoragecategory>
MAINTENANCE WORK PACKAGES	P	R	R	E.5.3.5	<maintwp>
Preparation for storage or shipment	P	R	R	E.5.3.5.3.25	<pss>
CHAPTER X. **AMMUNITION MARKING MAINTENANCE INSTRUCTIONS**		R	R	E.5.2 E.5.2.10	<mim> <ammomarkingcategory>
AMMUNITION MARKING INFORMATION WORK PACKAGE		R	R	E.5.3.14.2	<ammo.markingwp>
CHAPTER X. **PARTS INFORMATION** *(-10, -13, -14)* *(-13&P, -14&P)*	 P P	 P R	 P R	F.5.3.2	<pim>
INTRODUCTION WORK PACKAGE	P	R	R	F.5.3.5	<introwp>
REPAIR PARTS LIST WORK PACKAGE	P	R	R	F.5.3.6	<plwp>
REPAIR PARTS FOR SPECIAL TOOLS WORK PACKAGE	P			F.5.3.7	<stl_partswp>
KIT PARTS LIST WORK PACKAGE	P			F.5.3.8	<kitswp>
BULK ITEM WORK PACKAGE	P			F.5.3.9	<bulk_itemswp>
SPECIAL TOOLS LIST WORK PACKAGE	P			F.5.3.10	<stlwp>
NSN INDEX WORK PACKAGE	P	R	R	F.5.3.11.1	<nsnindxwp>
P/N INDEX WORK PACKAGE	P	R	R	F.5.3.11.2	<pnindxwp>
REFERENCE DESIGNATOR INDEX WORK PACKAGE	P			F.5.3.11.3	<refdesindxwp>
CHAPTER X. **DESTRUCTION OF EQUIPMENT TO PREVENT ENEMY USE**				Appendix H	<destruct-ginfowp> <destruct-materialwp>
GENERAL INFORMATION WORK PACKAGE				H.5.1	<destruct-ginfowp>
DESTRUCTION OF EQUIPMENT TO PREVENT ENEMY USE WORK PACKAGE				H.5.2	<destruct-materialwp>

Source: https://assist.dla.mil -- Downloaded: 2016-12-09T23:32Z
Check the source to verify that this is the current version before use.

TABLE A-XII. TM Requirements Matrix for _____.

TM Content	Conventional and Chemical Ammunition			MIL-STD-40051-2 Reference	Element Name
	-10	-13 -13&P	-14 -14&P		
CHAPTER X. SUPPORTING INFORMATION ***NOTE*** *Applicable supporting information work packages shall be arranged in the order in which they are presented here and numbered accordingly.*	R	R	R	G.5.1	<sim>
REFERENCES WORK PACKAGE	R	R	R	G.5.2	<refwp>
INTRODUCTION FOR STANDARD TWO-LEVEL MAC WORK PACKAGE	P	R	R	G.5.3.1 G.5.3.3	<macintrowp>
TWO-LEVEL MAC WORK PACKAGE	P	R	R	G.5.3.4	<macwp>
COMPONENTS OF END ITEM (COEI) AND BASIC ISSUE ITEMS (BII) LISTS WORK PACKAGE	R	R	R	G.5.4	<coeibiiwp>
ADDITIONAL AUTHORIZATION LIST (AAL) WORK PACKAGE				G.5.5	<aalwp>
EXPENDABLE AND DURABLE ITEMS LIST WORK PACKAGE	R	R	R	G.5.6	<explistwp>
TOOL IDENTIFICATION LIST WORK PACKAGE	P			G.5.7	<toolidwp>
ADDITIONAL SUPPORTING WORK PACKAGES				G.5.11	<genwp>
REAR MATTER	R	R	R	5.2.2	<rear>
Glossary				5.2.2.1	<glossary>
Alphabetical index				5.2.2.2	<aindx>
DA Form 2028	R	R	R	5.2.2.3	<da2028>
Authentication page	R	R	R	5.2.2.4	<authent>
Back cover	R	R	R	5.2.2.7	<back>

Legend
R Required
P Prohibited
Shaded As Required

Source: https://assist.dla.mil -- Downloaded: 2016-12-09T23:32Z
Check the source to verify that this is the current version before use.

TABLE A-XIII. TM Requirements Matrix for _____.

TM Content	Conventional and Chemical Ammunition -40 -40&P	MIL-STD-40051-2 Reference	Element Name
FRONT MATTER	R	5.2.1	<paper.frnt>
Front cover	R	5.2.1.1	<frntcover>
Warning summary		5.2.1.3	<warnsum>
Change transmittal page		5.2.1.4	<chgsheet>
List of effective pages / work packages	R	5.2.1.5	<loepwp>
Title block page	R	5.2.1.6	<titleblk>
Table of contents	R	5.2.1.8	<contents>
How to use this manual	R	5.2.1.9	<howtouse>
CHAPTER 1. GENERAL INFORMATION, EQUIPMENT DESCRIPTION AND THEORY OF OPERATION	R	B.5.1	<gim>
GENERAL INFORMATION WORK PACKAGE	R	B.5.2	<ginfowp>
Scope	R	B.5.2.3	<scope>
Maintenance forms, records, and reports	R	B.5.2.4	<mfrr>
Reporting equipment improvement recommendations (EIR)	R	B.5.2.5	<eir>
Hand receipt (HR) manuals	P	B.5.2.6	<handreceipt>
Corrosion prevention and control (CPC)	R	B.5.2.7	<cpcdata>
Ozone depleting substances (ODS)		B.5.2.8	<odsdata>
Destruction of Army materiel to prevent enemy use	R	B.5.2.8	<destructmat>
Preparation for storage or shipment	R	B.5.2.10	<pssref>
Warranty information		B.5.2.11	<wrntyref>
Nomenclature cross-reference list		B.5.2.12	<nomenreflist>
List of abbreviations	R	B.5.2.13	<loa>
Quality of material	R	B.5.2.15	<qual.mat.info>
Safety, care, and handling		B.5.2.16	<sftyinfo>
Nuclear hardness		B.5.2.17	<hcp>
Calibration		B.5.2.18	<calref>
Supporting information for repair parts, special tools, TMDE, and support equipment		B.5.2.25	<supdata>
Copyright credit line		B.5.2.26	<copyrt>

Source: https://assist.dla.mil -- Downloaded: 2016-12-09T23:32Z
Check the source to verify that this is the current version before use.

TABLE A-XIII. TM Requirements Matrix for _____.

TM Content	Conventional and Chemical Ammunition -40 -40&P	MIL-STD-40051-2 Reference	Element Name
EQUIPMENT DESCRIPTION AND DATA WORK PACKAGE	R	B.5.3	<descwp>
Equipment characteristics, capabilities, and features	R	B.5.3.3	<eqpinfo>
Location and description of major components		B.5.3.4	<locdesc>
Differences between models		B.5.3.5	<eqpdiff>
Equipment data	R	B.5.3.6	<eqpdata>
CHAPTER X. MAINTENANCE INSTRUCTIONS	R	E.5.2 E.5.2.2 E.5.2.3	<mim> <maintenancepmcscategory> <maintenancecategory>
SERVICE UPON RECEIPT WORK PACKAGE	P	E.5.3.2	<surwp>
Siting	P	E.5.3.2.3.1	<siting>
Shelter requirements	P	E.5.3.2.3.2	<shltr>
Service upon receipt of materiel	P	E.5.3.2.3.3	<surmat>
Installation instructions	P	E.5.3.2.3.4	<install>
Preliminary servicing of equipment	P	E.5.3.2.3.5	<preserv>
Preliminary checks and adjustment of equipment	P	E.5.3.2.3.6	<prechkadj>
Preliminary calibration of equipment	P	E.5.3.2.3.7	<precal>
Circuit alignment	P	E.5.3.2.3.8	<calign>
Ammunition markings	P	E.5.3.2.3.9.1	<ammo.markings>
Classification of defects	P	E.5.3.2.3.9.2	<ammo.defect>
Ammunition handling	P	E.5.3.2.3.9.3	<ammo.handling>
Procedures to activate ammunition	P	E.5.3.2.3.9.4	<arm>
Additional service upon receipt task	P	E.5.3.2.3.10	<other.surtsk>
Follow-on maintenance	P	E.5.3.2.3.11	<followon.maintsk>
MAINTENANCE WORK PACKAGES ***NOTE*** *As applicable, the following maintenance tasks shall be presented in the general order listed below:*		E.5.3.5	<maintwp>
Servicing		E.5.3.5.3.3	<service>
Ground handling		E.5.3.5.3.4	<groundtsk>
Inspection of installed items		E.5.3.5.3.5	<inspinstitm>
Removal		E.5.3.5.3.6	<remove>
Disassembly		E.5.3.5.3.7	<disassem>
Cleaning		E.5.3.5.3.8	<clean>
Inspection - acceptance and rejection criteria		E.5.3.5.3.9	<acptrejinsp>

Source: https://assist.dla.mil -- Downloaded: 2016-12-09T23:32Z
Check the source to verify that this is the current version before use.

TABLE A-XIII. TM Requirements Matrix for _____.

TM Content	Conventional and Chemical Ammunition -40 -40&P	MIL-STD-40051-2 Reference	Element Name
Nondestructive testing inspection (NDTI)		E.5.3.5.3.10	<ndti>
Repair or replacement		E.5.3.5.3.11	<repair-rplc>
Alignment		E.5.3.5.3.12	<align>
Painting		E.5.3.5.3.13	<paint>
Lubrication		E.5.3.5.3.14	<lube>
Assembly		E.5.3.5.3.15	<assem>
Test and inspection		E.5.3.5.3.16	<test-inspect>
Installation		E.5.3.5.3.17	<install>
Adjustment		E.5.3.5.3.18	<adjust>
Calibration		E.5.3.5.3.19	<calibration>
Radio interference suppression		E.5.3.5.3.20	<ris>
Placing in service		E.5.3.5.3.21	<pis>
Testing		E.5.3.5.3.22	<test-pass>
Preparation for storage or shipment		E.5.3.5.3.25	<pss>
Classification of defects		E.5.3.5.3.26	<ammo.defect>
Handling ammunition		E.5.3.5.3.27	<ammo.handling>
Ammunition markings		E.5.3.5.3.28	<ammo.markings>
Procedures for ammunition activation		E.5.3.5.3.29	<arm>
Other maintenance task		E.5.3.5.3.30	<other.surtsk>
Follow-on maintenance		E.5.3.5.3.31	<followon.maintsk>
GENERAL MAINTENANCE WORK PACKAGE		E.5.3.6	<maintwp>
LUBRICATION INSTRUCTIONS WORK PACKAGE		E.5.3.7	<lubewp>
ILLUSTRATED LIST OF MANUFACTURED ITEMS WORK PACKAGE		E.5.3.9	<manuwp>
Introduction		E.5.3.9.1	<intro>
Manufacturing procedures work package		E.5.3.9.2	<manfcprocwp>
TORQUE LIMITS WORK PACKAGE		E.5.3.10	<torquewp>
WIRING DIAGRAMS WORK PACKAGE		E.5.3.11	<wiringwp>
CHAPTER X. TEST AND INSPECTION MAINTENANCE INSTRUCTIONS		E.5.2 E.5.2.8	<mim> <testinspectioncategory>
MAINTENANCE WORK PACKAGES		E.5.3.5	<maintwp>
Test and inspection		E.5.3.5.3.16	<test-inspect>

Source: https://assist.dla.mil -- Downloaded: 2016-12-09T23:32Z
Check the source to verify that this is the current version before use.

TABLE A-XIII. TM Requirements Matrix for _____.

TM Content	Conventional and Chemical Ammunition -40 -40&P	MIL-STD-40051-2 Reference	Element Name
CHAPTER X. SHIPMENT/MOVEMENT AND STORAGE MAINTENANCE INSTRUCTIONS	P	E.5.2 E.5.2.9	<mim> <shipmentmovementstoragecategory>
MAINTENANCE WORK PACKAGES	P	E.5.3.5	<maintwp>
Preparation for storage or shipment	P	E.5.3.5.3.25	<pss>
CHAPTER X. AMMUNITION MARKING MAINTENANCE INSTRUCTIONS	R	E.5.2 E.5.2.10	<mim> <ammomarkingcategory>
AMMUNITION MARKING INFORMATION WORK PACKAGE	R	E.5.3.14.2	<ammo.markingwp>
CHAPTER X. PARTS INFORMATION *(-40)* *(-40&P)*	 P R	F.5.3.2	<pim>
INTRODUCTION WORK PACKAGE	R	F.5.3.5	<introwp>
REPAIR PARTS LIST WORK PACKAGE	R	F.5.3.6	<plwp>
REPAIR PARTS FOR SPECIAL TOOLS WORK PACKAGE		F.5.3.7	<stl_partswp>
KIT PARTS LIST WORK PACKAGE		F.5.3.8	<kitswp>
BULK ITEM WORK PACKAGE		F.5.3.9	<bulk_itemswp>
SPECIAL TOOLS LIST WORK PACKAGE		F.5.3.10	<stlwp>
NSN INDEX WORK PACKAGE	R	F.5.3.11.1	<nsnindxwp>
P/N INDEX WORK PACKAGE	R	F.5.3.11.2	<pnindxwp>
REFERENCE DESIGNATOR INDEX WORK PACKAGE		F.5.3.11.3	<refdesindxwp>
CHAPTER X. SUPPORTING INFORMATION ***NOTE*** *Applicable supporting information work packages shall be arranged in the order in which they are presented here and numbered accordingly.*	R	G.5.1	<sim>
REFERENCES WORK PACKAGE	R	G.5.2	<refwp>
EXPENDABLE AND DURABLE ITEMS WORK PACKAGE	R	G.5.6	<explistwp>
TOOL IDENTIFICATION LIST WORK PACKAGE		G.5.7	<toolidwp>
ADDITIONAL SUPPORTING WORK PACKAGES		G.5.11	<genwp>

Source: https://assist.dla.mil -- Downloaded: 2016-12-09T23:32Z
Check the source to verify that this is the current version before use.

TABLE A-XIII. TM Requirements Matrix for _____.

TM Content	Conventional and Chemical Ammunition			MIL-STD-40051-2 Reference	Element Name
			-40 -40&P		
REAR MATTER			R	5.2.2	<rear>
Glossary				5.2.2.1	<glossary>
Alphabetical index				5.2.2.2	<aindx>
DA Form 2028			R	5.2.2.3	<da2028>
Authentication page			R	5.2.2.4	<authent>
Back cover			R	5.2.2.7	<back>

Legend
R Required
P Prohibited
Shaded As Required

Source: https://assist.dla.mil -- Downloaded: 2016-12-09T23:32Z
Check the source to verify that this is the current version before use.

This page intentionally left blank.

Source: https://assist.dla.mil -- Downloaded: 2016-12-09T23:32Z
Check the source to verify that this is the current version before use.

TABLE A-XIV. TM Requirements Matrix for _____.

TM Content	Conventional and Chemical Ammunition		MIL-STD-40051-2 Reference	Element Name
	-23 -23&P	-24 -24&P		
FRONT MATTER	R	R	5.2.1	<paper.frnt>
Front cover	R	R	5.2.1.1	<frntcover>
Warning summary			5.2.1.3	<warnsum>
Change transmittal page			5.2.1.4	<chgsheet>
List of effective pages / work packages	R	R	5.2.1.5	<loepwp>
Title block page	R	R	5.2.1.6	<titleblk>
Table of contents	R	R	5.2.1.8	<contents>
How to use this manual	R	R	5.2.1.9	<howtouse>
CHAPTER 1. GENERAL INFORMATION, EQUIPMENT DESCRIPTION AND THEORY OF OPERATION	R	R	B.5.1	<gim>
GENERAL INFORMATION WORK PACKAGE	R	R	B.5.2	<ginfowp>
Scope	R	R	B.5.2.3	<scope>
Maintenance forms, records, and reports	R	R	B.5.2.4	<mfrr>
Reporting equipment improvement recommendations (EIR)	R	R	B.5.2.5	<eir>
Hand receipt (HR) information			B.5.2.6	<handreceipt>
Corrosion prevention and control (CPC)	R	R	B.5.2.7	<cpcdata>
Ozone depleting substances (ODS)			B.5.2.8	<odsdata>
Destruction of Army materiel to prevent enemy use	R	R	B.5.2.8	<destructmat>
Preparation for storage or shipment	R	R	B.5.2.10	<pssref>
Warranty information			B.5.2.11	<wrntyref>
Nomenclature cross-reference list			B.5.2.12	<nomenreflist>
List of abbreviations	R	R	B.5.2.13	<loa>
Quality of material			B.5.2.15	<qual.mat.info>
Safety, care, and handling			B.5.2.16	<sftyinfo>
Nuclear hardness			B.5.2.17	<hcp>
Calibration			B.5.2.18	<calref>
Supporting information for repair parts, special tools, TMDE, and support equipment			B.5.2.25	<supdata>
Copyright credit line			B.5.2.26	<copyrt>

Source: https://assist.dla.mil -- Downloaded: 2016-12-09T23:32Z
Check the source to verify that this is the current version before use.

TABLE A-XIV. TM Requirements Matrix for _____.

TM Content	Conventional and Chemical Ammunition		MIL-STD-40051-2 Reference	Element Name
	-23 -23&P	-24 -24&P		
EQUIPMENT DESCRIPTION AND DATA WORK PACKAGE	R	R	B.5.3	<descwp>
Equipment characteristics, capabilities, and features	R	R	B.5.3.3	<eqpinfo>
Location and description of major components			B.5.3.4	<locdesc>
Differences between models			B.5.3.5	<eqpdiff>
Equipment data	R	R	B.5.3.6	<eqpdata>
CHAPTER X. MAINTENANCE INSTRUCTIONS ***NOTE*** *PMCS is required as a minimum in one maintenance chapter*	R	R	E.5.2 E.5.2.2 E.5.2.3	<mim> <maintenancepmcscategory> <maintenancecategory>
SERVICE UPON RECEIPT WORK PACKAGE	R	R	E.5.3.2	<surwp>
Siting			E.5.3.2.3.1	<siting>
Shelter requirements			E.5.3.2.3.2	<shltr>
Service upon receipt of materiel	R	R	E.5.3.2.3.3	<surmat>
Installation instructions	R	R	E.5.3.2.3.4	<install>
Preliminary servicing of equipment			E.5.3.2.3.5	<preserv>
Preliminary checks and adjustment of equipment			E.5.3.2.3.6	<prechkadj>
Preliminary calibration of equipment			E.5.3.2.3.7	<precal>
Circuit alignment			E.5.3.2.3.8	<calign>
Ammunition markings			E.5.3.2.3.9.1	<ammo.markings>
Classification of defects			E.5.3.2.3.9.2	<ammo.defect>
Ammunition handling			E.5.3.2.3.9.3	<ammo.handling>
Procedures to activate ammunition			E.5.3.2.3.9.4	<arm>
Additional service upon receipt task			E.5.3.2.3.10	<other.surtsk>
Follow-on maintenance			E.5.3.2.3.11	<followon.maintsk>
MAINTENANCE WORK PACKAGES ***NOTE*** *As applicable, the following maintenance tasks shall be presented in the general order listed below:*	R	R	E.5.3.5	<maintwp>
Servicing			E.5.3.5.3.3	<service>
Ground handling			E.5.3.5.3.4	<groundtsk>
Inspection of installed items			E.5.3.5.3.5	<inspinstitm>
Removal			E.5.3.5.3.6	<remove>
Disassembly			E.5.3.5.3.7	<disassem>

Source: https://assist.dla.mil -- Downloaded: 2016-12-09T23:32Z
Check the source to verify that this is the current version before use.

TABLE A-XIV. TM Requirements Matrix for _____.

TM Content	Conventional and Chemical Ammunition		MIL-STD-40051-2 Reference	Element Name
	-23 -23&P	-24 -24&P		
Cleaning			E.5.3.5.3.8	<clean>
Inspection - acceptance and rejection criteria			E.5.3.5.3.9	<acptrejinsp>
Nondestructive testing inspection (NDTI)			E.5.3.5.3.10	<ndti>
Repair or replacement			E.5.3.5.3.11	<repair-rplc>
Alignment			E.5.3.5.3.12	<align>
Painting			E.5.3.5.3.13	<paint>
Lubrication			E.5.3.5.3.14	<lube>
Assembly			E.5.3.5.3.15	<assem>
Test and inspection			E.5.3.5.3.16	<test-inspect>
Installation			E.5.3.5.3.17	<install>
Adjustment			E.5.3.5.3.18	<adjust>
Calibration			E.5.3.5.3.19	<calibration>
Radio interference suppression			E.5.3.5.3.20	<ris>
Placing in service			E.5.3.5.3.21	<pis>
Testing			E.5.3.5.3.22	<test-pass>
Preparation for storage or shipment			E.5.3.5.3.25	<pss>
Classification of defects			E.5.3.5.3.26	<ammo.defect>
Handling ammunition			E.5.3.5.3.27	<ammo.handling>
Ammunition markings			E.5.3.5.3.28	<ammo.markings>
Procedures for ammunition activation			E.5.3.5.3.29	<arm>
Additional maintenance task			E.5.3.5.3.30	<other.maintsk>
Follow-on maintenance			E.5.3.5.3.31	<followon.maintsk>
GENERAL MAINTENANCE WORK PACKAGE			E.5.3.6	<maintwp>
LUBRICATION INSTRUCTIONS WORK PACKAGE			E.5.3.7	<lubewp>
ILLUSTRATED LIST OF MANUFACTURED ITEMS WORK PACKAGE			E.5.3.9	<manuwp>
Introduction			E.5.3.9.1	<intro>
Manufacturing procedures work package			E.5.3.9.2	<manfcprocwp>
TORQUE LIMITS WORK PACKAGE			E.5.3.10	<torquewp>
WIRING DIAGRAMS WORK PACKAGE			E.5.3.11	<wiringwp>
CHAPTER X. TEST AND INSPECTION MAINTENANCE INSTRUCTIONS			E.5.2 E.5.2.8	<mim> <testinspectioncategory>
MAINTENANCE WORK PACKAGES			E.5.3.5	<maintwp>
Test and inspection			E.5.3.5.3.16	<test-inspect>

Source: https://assist.dla.mil -- Downloaded: 2016-12-09T23:32Z
Check the source to verify that this is the current version before use.

TABLE A-XIV. TM Requirements Matrix for _____.

TM Content	Conventional and Chemical Ammunition		MIL-STD-40051-2 Reference	Element Name
	-23 -23&P	-24 -24&P		
CHAPTER X. SHIPMENT/MOVEMENT AND STORAGE MAINTENANCE INSTRUCTIONS			E.5.2 E.5.2.9	<mim> <shipmentmovementstoragecategory>
MAINTENANCE WORK PACKAGES			E.5.3.5	<maintwp>
Preparation for storage or shipment			E.5.3.5.3.25	<pss>
CHAPTER X. AMMUNITION MARKING MAINTENANCE INSTRUCTIONS			E.5.2 E.5.2.10	<mim> <ammomarkingcategory>
AMMUNITION MARKING INFORMATION WORK PACKAGE			E.5.3.14.2	<ammo.markingwp>
CHAPTER X. PARTS INFORMATION *(-23, -24)* *(-23&P, -24&P)*	 P R		F.5.3.2	<pim>
INTRODUCTION WORK PACKAGE	R	R	F.5.3.5	<introwp>
REPAIR PARTS LIST WORK PACKAGE	R	R	F.5.3.6	<plwp>
REPAIR PARTS FOR SPECIAL TOOLS WORK PACKAGE			F.5.3.7	<stl_partswp>
KIT PARTS LIST WORK PACKAGE			F.5.3.8	<kitswp>
BULK ITEM WORK PACKAGE			F.5.3.9	<bulk_itemswp>
SPECIAL TOOLS LIST WORK PACKAGE			F.5.3.10	<stlwp>
NSN INDEX WORK PACKAGE	R	R	F.5.3.11.1	<nsnindxwp>
P/N INDEX WORK PACKAGE	R	R	F.5.3.11.2	<pnindxwp>
REFERENCE DESIGNATOR INDEX WORK PACKAGE			F.5.3.11.3	<refdesindxwp>
CHAPTER X. SUPPORTING INFORMATION ***NOTE*** *Applicable supporting information work packages shall be arranged in the order in which they are presented here and numbered accordingly.*	R	R	G.5.1	<sim>
REFERENCES WORK PACKAGE	R	R	G.5.2	<refwp>
INTRODUCTION FOR STANDARD TWO MLEVEL MAC WORK PACKAGE	R	R	G.5.3.1 G.5.3.3	<macintrowp>
STANDARD TWO-LEVEL MAC WORK PACKAGE	R	R	G.5.3.4	<macwp>

Source: https://assist.dla.mil -- Downloaded: 2016-12-09T23:32Z
Check the source to verify that this is the current version before use.

TABLE A-XIV. TM Requirements Matrix for _____.

TM Content	Conventional and Chemical Ammunition		MIL-STD-40051-2 Reference	Element Name
	-23 -23&P	-24 -24&P		
EXPENDABLE AND DURABLE ITEMS WORK PACKAGE	R	R	G.5.6	<explistwp>
TOOL IDENTIFICATION LIST WORK PACKAGE			G.5.7	<toolidwp>
ADDITIONAL SUPPORTING WORK PACKAGES			G.5.11	<genwp>
REAR MATTER	R	R	5.2.2	<rear>
Glossary			5.2.2.1	<glossary>
Alphabetical index			5.2.2.2	<aindx>
DA Form 2028	R	R	5.2.2.3	<da2028>
Authentication page	R	R	5.2.2.4	<authent>
Back cover	R	R	5.2.2.7	<back>

Legend
R Required
P Prohibited
Shaded As Required

Source: https://assist.dla.mil -- Downloaded: 2016-12-09T23:32Z
Check the source to verify that this is the current version before use.

This page intentionally left blank.

Source: https://assist.dla.mil -- Downloaded: 2016-12-09T23:32Z
Check the source to verify that this is the current version before use.

TABLE A-XV. TM Requirements Matrix for _____.

TM Content	Destruction to Prevent Enemy Use TM	MIL-STD-40051-2 Reference	Element Name
FRONT MATTER	R	5.2.1	<paper.frnt>
Front cover	R	5.2.1.1	<frntcover>
Warning summary	R	5.2.1.3	<warnsum>
Change transmittal page		5.2.1.4	<chgsheet>
List of effective pages / work packages	R	5.2.1.5	<loepwp>
Title block page with warning data	R	5.2.1.6 5.2.1.7	<titleblk>
CHAPTER 1. GENERAL INFORMATION	R	B.5.1	<gim>
GENERAL INFORMATION WORK PACKAGE	R	H.5.1	
Scope	R	H.5.1.3	
Authority to destroy	R	H.5.1.4	
Reporting destruction	R	H.5.1.5	
General destruction information	R	H.5.1.6	
Degree of destruction	R	H.5.1.7	
Essential components and spare parts	R	H.5.1.8	
CHAPTER X. DESTRUCTION OF EQUIPMENT TO PREVENT ENEMY USE	R	H.5.2	<mim> <?category>
DESTRUCTION PROCEDURES WORK PACKAGE	R	H.5.2	
Parts list	R	H.5.2.3	
Specific destruction procedures	R	H.5.2.4	
Classified equipment and documents	R	H.5.2.5	
CHAPTER X. SUPPORTING INFORMATION	R	G.5.1	<sim>
REFERENCES WORK PACKAGE	R	G.5.2	<refwp>
REAR MATTER	R	5.2.2	<rear>
Alphabetical Index	R	5.2.2.2	<aindx>
DA Form 2028	R	5.2.2.3	<da2028>
Authentication page	R	5.2.2.4	<authent>
Back cover	R	5.2.2.7	<back>

Legend
R Required
P Prohibited
Shaded As Required

Source: https://assist.dla.mil -- Downloaded: 2016-12-09T23:32Z
Check the source to verify that this is the current version before use.

This page intentionally left blank.

Source: https://assist.dla.mil -- Downloaded: 2016-12-09T23:32Z
Check the source to verify that this is the current version before use.

TABLE A-XVI. TM Requirements Matrix for _____.

TM Content	BDAR TM	MIL-STD-40051-2 Reference	Element Name
FRONT MATTER	R	5.2.1	<paper.frnt>
Front cover	R	5.2.1.1	<frntcover>
Warning summary	R	5.2.1.3	<warnsum>
Change transmittal page		5.2.1.4	<chgsheet>
List of effective pages / work packages	R	5.2.1.5	<loepwp>
Title block page	R	5.2.1.6 5.2.1.7	<titleblk>
CHAPTER 1. GENERAL INFORMATION	R	I.5.2.1	
GENERAL INFORMATION WORK PACKAGE	R	I.5.2.1	
BDAR fixes statement	R	I.5.2.1.3	
Introduction	R	I.5.2.1.4	
Standards and practices	R	I.5.2.1.5	
Tasks ansd responsibilities	R	I.5.2.1.6	
Combat threats	R	I.5.2.1.7	
CHAPTER 2. ASSESSING BATTLE DAMAGE	R	I.5.2.2	
BATTLE DAMAGE ASSESSMENT WORK PACKAGE	R	I.5.2.2	
BDAR fixes statement	R	I.5.2.2.3	
Introduction	R	I.5.2.2.4	
General fault assessment tables	R	I.5.2.2.5	
CHAPTER X. GENERAL REPAIR	R	I.5.2.3	
GENERAL REPAIR WORK PACKAGE	R	I.5.2.3	
BDAR fixes statement	R	I.5.2.3.3	
Introduction	R	I.5.2.3.4	
Repair procedure	R	I.5.2.3.5	
CHAPTER X. MAJOR FUNCTION GROUP	R	I.5.2.3	
MAJOR FUNCTIONAL GROUP WORK PACKAGE	R	I.5.2.3	
BDAR fixes statement	R	I.5.2.3.3	
Introduction	R	I.5.2.3.4	
Major functional group repair procedure	R	I.5.2.3.5	
CHAPTER X. AUXILLIARY EQUIPMENT		I.5.2.3	
AUXILLIARY EQUIPMENT WORK PACKAGE		I.5.2.3	
BDAR fixes statement		I.5.2.3.3	
Content and format		I.5.2.3.4	
CHAPTER X. SUPPORTING INFORMATION	R	G.5.1	<sim>
REFERENCES WORK PACKAGE	R	G.5.2	<refwp>

Source: https://assist.dla.mil -- Downloaded: 2016-12-09T23:32Z
Check the source to verify that this is the current version before use.

TABLE A-XVI. TM Requirements Matrix for _____.

TM Content	BDAR TM	MIL-STD-40051-2 Reference	Element Name
SPECIAL OR FABRICATED TOOLS WORK PACKAGE		I.5.2.5	
EXPENDABLE AND DURABLE ITEMS WORK PACKAGE	R	G.5.6	<explistwp>
SUBSTITUTE MATERIALS/PARTS WORK PACKAGE	R	I.5.2.7	
REAR MATTER	R	5.2.2	<rear>
Alphabetical Index	R	5.2.2.2	<aindx>
DA Form 2028	R	5.2.2.3	<da2028>
Authentication page	R	5.2.2.4	<authent>
Back cover	R	5.2.2.7	<back>

Legend
R Required
P Prohibited
Shaded As Required

Source: https://assist.dla.mil -- Downloaded: 2016-12-09T23:32Z
Check the source to verify that this is the current version before use.

REMARKS FOR TABLE

Source: https://assist.dla.mil -- Downloaded: 2016-12-09T23:32Z
Check the source to verify that this is the current version before use.

This page intentionally left blank.

Source: https://assist.dla.mil -- Downloaded: 2016-12-09T23:32Z
Check the source to verify that this is the current version before use.

APPENDIX B

GENERAL INFORMATION, EQUIPMENT DESCRIPTION, AND THEORY OF OPERATION

B.1 SCOPE.

B.1.1 Scope. This appendix establishes the technical content requirements for the preparation of general information, equipment description, and theory of operation data for major weapon systems, and their related systems, subsystems, equipment, weapons replacement assemblies (WRAs), and shop replacement assemblies (SRAs). This Appendix is a mandatory part of this standard. The information contained herein is intended for compliance. The requirements are applicable for all maintenance levels through overhaul (depot) including Depot Maintenance Work Requirements (DMWRs) and National Maintenance Work Requirements (NMWRs).

B.2 APPLICABLE DOCUMENTS.

The applicable documents in section 2 apply to this Appendix.

B.3 DEFINITIONS.

The definitions in section 3 apply to this Appendix.

B.4 GENERAL REQUIREMENTS.

B.4.1 General. Descriptive information with theory of operation shall be prepared for weapon systems, major equipment, components, and applicable support and interface equipment. Information required to provide the user with a physical description, and functionally explain how the weapon system or equipment operates shall be included.

B.4.2 Maintenance level applicability. Requirements contained in this standard are applicable to all maintenance levels unless specifically noted in bold and in parentheses (i.e., **Field**). The labeled requirements shall be applicable to all TMs containing that maintenance level. An explanation of all applicable Department of Army maintenance levels is provided in section 3.

B.4.3 Preparation of digital data for electronic delivery. Technical manual data prepared and delivered digitally in accordance with this standard shall be Extensible Markup Language (XML) tagged using the Document Type Definition (DTD) for Maintenance Instructions and the XML Stylesheet Language (XSL), or style sheets in accordance with MIL-STD-2361. Refer to 4.6 for information on obtaining or accessing this DTD. XML tags used in the modular DTD are noted throughout the text of this standard in bracketed, bold characters (i.e., **<descwp>**) as a convenience for the TM author and to ensure that the tags are used correctly when developing a document instance.

B.4.4 Use of the DTD/XSLs. The DTD referenced in this standard interpret the technical content and structure for the functional requirements contained in this standard and are mandatory for use. The XSLs referenced herein interpret the style and format. As specified by the contracting activity, XSLs, or style sheets may be used to produce final reproducible paper copy for all TMs prepared in accordance with this standard. For additional information on the DTD and specific XSLs refer to MIL-STD-2361.

Source: https://assist.dla.mil -- Downloaded: 2016-12-09T23:32Z
Check the source to verify that this is the current version before use.

B.4.5 Content structure and format. The examples provided herein are an accurate representation of the content structure and format requirements contained in this appendix and shall be followed to permit the effective use of the DTD for General Information,. Equipment Description, and Theory of Operation.

B.4.6 Style and format. This standard provides style and format requirements for the technical content requirements described in this appendix. These requirements are considered mandatory and are intended for compliance.

B.4.7 Work package development. Technical manual data developed in accordance with this standard shall be divided into individual, stand alone units of information called work packages. A work package shall consist of descriptive, operational, maintenance, troubleshooting, support, or parts information for the weapon system or equipment.

B.4.8 Safety devices and interlocks. Information shall be prepared pertaining to the purpose and location of all safety devices and interlocks in conjunction with the pertinent procedures.

B.4.9 Electrostatic discharge (ESD) sensitive parts. If the equipment contains ESD sensitive parts, components, or circuits, cautions and ESD labels shall be incorporated into the applicable tasks and procedures to ensure ESD sensitive parts are not damaged or degraded during maintenance and operation. Refer to 4.7.20 for requirements on labeling with ESD. Actions which could damage ESD sensitive parts, but which are not directly related to handling or operation of ESD sensitive parts, shall not be annotated with the ESD acronym, but shall be preceded by a caution statement.

B.4.10 Nuclear hardness. If the weapon system/equipment has nuclear survivability requirements (for example, over pressure and burst, thermal radiation, electromagnetic pulse, or transient radiation effects on electronics), cautions and Hardness-Critical Processes (HCP) labels shall be incorporated into the applicable tasks and procedures to ensure the hardness of the equipment is not degraded during handling or operation. Refer to 4.7.19 for requirements on labeling with HCP. Actions which could degrade hardness, but which are not directly involved in establishing nuclear hardness, shall not be annotated with the acronym, but shall be preceded by a caution statement.

B.4.11 Selective application and tailoring. This standard contains some requirements that may not be applicable to the preparation of all technical manuals. Selective application and tailoring of requirements contained in this standard are the responsibility of the acquiring activity and shall be accomplished using Appendix A, Technical Manual Content Selection Matrixes. The applicability of some requirements is also designated by one of the following statements: unless specified otherwise by the acquiring activity; as or when specified by the acquiring activity.

Source: https://assist.dla.mil -- Downloaded: 2016-12-09T23:32Z
Check the source to verify that this is the current version before use.

B.5 DETAILED REQUIREMENTS.

B.5.1 Preparation of general information, equipment description, and theory of operation. General information, equipment description and theory of operation chapter shall be prepared and subdivided into individual work packages to provide the user with information for general requirements, descriptive data about the weapon system or equipment, and an explanation of how the weapon system or equipment works. Weapon system and equipment description and theory of operation data shall be developed in narrative or tabular form, or by whatever method is most simple or effective to convey the specific TM application. Descriptive information shall not contain any procedural data or warnings, cautions or notes. When necessary for clarity or improved understanding, illustrations shall be used to support the narrative or tabular information. Refer to 4.7.9.1 for description of work package identification information requirements. See MIL-HDBK-1222 for examples of work package identification information format.

B.5.1.1 Required general information, equipment description, and theory of operation data work packages. General information, equipment description and theory of operation data shall be developed and divided into the following types of work packages. Nomenclature used to identify the weapon system, major equipment, components, and applicable support and interface equipment shall remain consistent throughout and between all work packages.

a. General information work package <**ginfowp**>.
b. Equipment description and data work package <**descwp**>.
c. Theory of operation work package <**thrywp**>.
d. General information work package (Preventive Maintenance Service Manual Only) <**pms-ginfowp**>.
e. General information work package (Phased Maintenance Checklist Manual Only) **<pm-ginfowp>**.

B.5.2 General information work package **<ginfowp>**. This work package shall contain the requirements provided in B.5.2.1 through B.5.2.26, as applicable, for the weapon system/equipment. Refer to MIL-HDBK-1222 for example.

B.5.2.1 Work package identification information **<wpidinfo>**. Work package identification information is required for this work package (refer to 4.7.9.1).

B.5.2.2 Initial setup information **<wpinfo>**. Initial setup information is not required for this work package.

B.5.2.3 Scope **<scope>**. A brief statement shall be prepared to tell what is covered in the TM. As applicable, the following information shall also be included.

a. Type of manual.
b. Model number(s) and equipment name(s).
c. Purpose of equipment.
d. Special inclusions in the manual, such as drill procedures or on-vehicle loading plans.

Source: https://assist.dla.mil -- Downloaded: 2016-12-09T23:32Z
Check the source to verify that this is the current version before use.

B.5.2.4 Maintenance forms, records, and reports **<mfrr>**.

a. (A) Army Only TM. The following statement shall be include:

"**MAINTENANCE FORMS, RECORDS, AND REPORTS**

Department of the Army forms and procedures used for equipment maintenance will be those prescribed by (as applicable) DA PAM 750-8, The Army Maintenance Management System (TAMMS) Users Manual; DA PAM 738-751, Functional Users Manual for the Army Maintenance Management Systems - Aviation (TAMMS-A); or AR 700-138, Army Logistics Readiness and Sustainability."

b. (MC) Marines Only TM. The following statement shall be include:

"**MAINTENANCE FORMS, RECORDS, AND REPORTS**

Maintenance forms and records used by Marine Corps personnel are prescribed by TM 4700-15/1."

c. Multi-Service TM. The following statements shall be included only for multi-service technical publication and use only applicable services (e.g., if the Navy does not use the publication, do not include a statement for that Service):

"**MAINTENANCE FORMS, RECORDS, AND REPORTS**

(1) (A) Department of the Army forms and procedures used for equipment maintenance will be those prescribed by (as applicable) DA PAM 750-8, The Army Maintenance Management System (TAMMS) Users Manual; DA PAM 738-751, Functional Users Manual for the Army Maintenance Management Systems - Aviation (TAMMS-A); or AR 700-138, Army Logistics Readiness and Sustainability.

(2) (MC) Maintenance forms and records used by Marine Corps personnel are prescribed by TM 4700-15/1."

(3) (F) Maintenance forms and records used by Air Force personnel are prescribed in AFI 21-101 and the applicable TO 00-20 Series Technical Orders.

(4) (N) Navy users should refer to their service peculiar directives to determine applicable maintenance forms and records to be used."

d. (A) Army conventional and chemical ammunition. The following statement shall be added.

"Accidents involving injury to personnel or damage to material will be reported on DA Form 285, U.S. Army Accident Report in accordance with AR 385-40. Explosives and ammunition malfunctions will be reported in accordance with AR 75-1."

e. When applicable, add references to SB 742-1, Inspection of Supplies and Equipment Ammunition Surveillance Procedures.

Source: https://assist.dla.mil -- Downloaded: 2016-12-09T23:32Z
Check the source to verify that this is the current version before use.

B.5.2.5 Reporting equipment improvement recommendations **<eir>**. The following statement shall be included.

"REPORTING EQUIPMENT IMPROVEMENT RECOMMENDATIONS (EIR)

If your (*insert equipment short item name*) needs improvement, let us know. Send us an EIR. You, the user, are the only one who can tell us what you don't like about your equipment. Let us know why you don't like the design or performance. If you have Internet access, the easiest and fastest way to report problems or suggestions is to go to https://aeps.ria.army.mil/aepspublic.cfm (scroll down and choose the "Submit Quality Deficiency Report" bar). The Internet form lets you choose to submit an Equipment Improvement Recommendation (EIR), a Product Quality Deficiency Report (PQDR or a Warranty Claim Action (WCA). You may also submit your information using an SF 368 (Product Quality Deficiency Report). You can send your SF 368 via e-mail, regular mail, or facsimile using the addresses/facsimile numbers specified in DA PAM 750-8, The Army Maintenance Management System (TAMMS) Users Manual. We will send you a reply."

B.5.2.5.1 (MC) Additional reporting equipment improvement recommendations Marine Corps TMs. The following statement shall be added for Marine Corps TMs:

"For Marine Corps users: Quality deficiency reports (QDR) shall be submitted on SF 368 in accordance with MCO 4855.10. A reply will be furnished to you."

B.5.2.6 Hand receipt **(HR) manuals (Field/Aviation Maintenance Company (AMC) or below only) <handreceipt>**. If a hand receipt manual exists for your equipment, the following statement shall be included in operator's/field maintenance manuals.

"**HAND RECEIPT (HR) MANUALS**

This manual has a companion document with a TM number followed by "-HR" (which stands for Hand Receipt). TM X-XXXX-XXX-10-HR consists of preprinted hand receipts that list end item related equipment (i.e., COEI, BII, and AAL) that must be accounted for. As an aid to property accountability, additional HR manuals may be requisitioned through normal publication channels."

B.5.2.7 Corrosion prevention and control **<cpcdata>**. A statement similar to the following shall be prepared.

"**CORROSION PREVENTION AND CONTROL (CPC)**

Corrosion Prevention and Control (CPC) of Army materiel is a continuing concern. It is important that any corrosion problems with this item be reported so that the problem can be corrected and improvements can be made to prevent the problem in future items.

Corrosion specifically occurs with metals. It is an electrochemical process that causes the degradation of metals. It is commonly caused by exposure to moisture, acids, bases, or salts. An example is the rusting of iron. Corrosion damage in metals can be seen, depending on the metal, as tarnishing, pitting, fogging, surface residue, and/or cracking.

Plastics, composites, and rubbers can also degrade. Degradation is caused by thermal (heat), oxidation (oxygen), solvation (solvents), or photolytic (light, typically UV)

Source: https://assist.dla.mil -- Downloaded: 2016-12-09T23:32Z
Check the source to verify that this is the current version before use.

processes. The most common exposures are excessive heat or light. Damage from these processes will appear as cracking, softening, swelling, and/or breaking.

SF Form 368, Product Quality Deficiency Report should be submitted to the address specified in DA PAM 750-8, The Army Maintenance Management System (TAMMS) Users Manual."

For **aircraft TMs** this information shall include a reference to TM 1-1500-344-24, volumes 1-4 (Cleaning and Corrosion Control).

B.5.2.8 Ozone depleting substances (ODS) **<odsdata>**. The use of Class 1 ozone depleting substances (ODS) for new acquisitions has been curtailed by Section 326 of the National Defense Authorization Act of Fiscal Year 1993 (Public Law 102, 484) and related Army policy. Ozone depleting substances are listed in Title VI of the Clean Air Act. For systems procured and fielded prior to the effectiveness of the above law (June 1993) that use a Class 1 ODS, a listing of those substances required to operate and maintain the system shall be included in the manual. This requirement applies to any system procured or fielded after June 1993 that requires the use of a Class 1 ODS, where the use of the ODS has been properly documented and waived. The procuring activity will provide a list of Class 1 ODS on request.

B.5.2.9 Destruction of Army materiel to prevent enemy use **<destructmat>**. Reference shall be made to the appropriate TM(s) or work packages covering the destruction of Army materiel to prevent enemy use as provided by the proponent activity.

B.5.2.10 Preparation for storage or shipment **<pssref>**. Reference shall be made to the preparation for storage or shipment procedures, including packaging and administrative storage, found in the applicable maintenance instructions work package.

B.5.2.11 Warranty information **<wrntyref>**. When the TM covers equipment that is under warranty and a Warranty Technical Bulletin (WTB) is published, the applicable WTB shall be referenced. When a WTB is not published, the following statement shall be included.

"**WARRANTY INFORMATION**

The (*insert name of equipment*) is warranted for (*insert miles or other timeframe as appropriate*). The warranty starts on the date found in block 23 of DA Form 2408-9, Equipment Control Record. Report all defects to your supervisor, who will take appropriate action."

B.5.2.12 Nomenclature cross-reference list **<nomenreflist>**. A cross-reference list shall be prepared when unofficial nomenclature (common name) is approved by the proponent activity.

B.5.2.13 List of abbreviations/acronyms **<loa>**. A list shall be prepared, consisting of all abbreviations, acronyms, signs, or symbols used in the manual. For **aircraft only**, a statement shall be prepared that abbreviations are in accordance with ASME Y14.38, except when the abbreviation stands for a marking actually found in the aircraft.

Source: https://assist.dla.mil -- Downloaded: 2016-12-09T23:32Z
Check the source to verify that this is the current version before use.

B.5.2.14 Quality Assurance **(QA) (DMWR/NMWR and aviation only) <qainfo>**. When specified by the acquiring activity, reference shall be made to the pertinent QA or include the appropriate general QA information. If QA information is not referenced but is included in the manual, it shall be stated that the text of each quality assurance procedure or step in the manual is preceded (and highlighted) by the addition of "QA check." For **aircraft maintenance TMs**, include a reference to FM 3-04.500. The abbreviation "QA" shall be defined either in a note or in the text.

B.5.2.15 Quality of material **(Field/Aviation Maintenance Company (AMC) and above only) <qual.mat.info>**. A statement(s) similar to the following shall be included.

> "Material used for replacement , repair, or modification must meet the requirements of this (*insert manual*). If quality of material requirements are not stated in this (*insert manual*), the material must meet the requirements of the drawings, standards, specifications, or approved engineering change proposals applicable to the subject equipment."

B.5.2.16 Safety, care, and handling **<sftyinfo>**. The following general precautions and safety regulations shall be prepared.

a. (**Ammunition TMs**) Information shall be prepared to comply with DA PAM 385-63. References to applicable Army Regulations (ARs) for range safety and danger zones during training and combat shall be included. Explanations and official definitions shall be prepared for such safety-related terms as "misfire," "hangfire," and "cook-off," which describe characteristics associated with the specific items(s) covered by the TM under preparation. A reference to AR 385-64 and DA PAM 385-64 shall be made for general ammunition care, handling, and safety.

b. For TMs covering equipment with radioactive parts or components, information shall be prepared to comply with Nuclear Regulatory Commission provisions, and references to applicable ARs and safety TMs on radioactive materials shall be included. If additional coverage on radioactive materials is needed, but is not included in applicable TMs, instructions shall be prepared as required. In addition, the following information shall be prepared for inclusion throughout the TM.

   (1) Nuclear warning notices shall be placed at the beginning of any instruction covering procedures that will expose personnel to a nuclear radiation hazard.

   (2) Procedures to be followed prior to maintenance actions, or in the event of breakage of radioactive parts or components, including safety, care, and handling instructions.

   (3) Radioactive parts or components shall be shown and identified on a parts location diagram or illustration, and warning notices.

   (4) A list of radioactive parts or components and the type and quantity of radioactive material involved shall be included as part of equipment data (refer to B.5.3).

   (5) Instructions for the disposal of radioactive material, such as the requirement to double bag all broken tritium sources in plastic.

c. Electrostatic Discharge (ESD) control standards for the protection of electrical and electronic parts, assemblies, and equipment shall be prepared. The ESD classes shall be identified. Refer to MIL-STD-1686 and MIL-HDBK-263, which contains ESD control procedures and material necessary to protect these items. For classifications of ESD marking procedures, refer to 4.7.20.

Source: https://assist.dla.mil -- Downloaded: 2016-12-09T23:32Z
Check the source to verify that this is the current version before use.

d. (**DMWRs/NMWRs only**) When applicable, reference shall be made to the electromagnetic compatibility standards (e.g., MIL-STD-461 and MIL-STD-462) that apply to the equipment covered in the DMWR/NMWR.

B.5.2.17 Nuclear hardness **<hcp>**. If equipment covered in the TM has nuclear survivability requirements (i.e., overpressure and burst, thermal radiation, electromagnetic pulse, or transient radiation effects on electronics), it shall be so stated. Refer to 4.7.19 for marking Hardness Critical Process (HCP) procedures. The following statement shall be included.

"**NUCLEAR HARDNESS**

All hardness critical procedures in this manual are marked with the acronym HCP as follows:

1. When an entire task, including all paragraphs and procedures, is considered hardness critical, only the task title will be marked by the acronym HCP, placed before the title.
2. When only certain processes and steps within the work package are hardness critical, only the applicable processes and steps will be marked by placement of the acronym HCP between each applicable step number and the text."

B.5.2.18 Calibration **<calref>**. Equipment requiring calibration shall be identified, and reference shall be made to the publication containing the applicable calibration procedure.

B.5.2.19 Engineering Change Proposals **(ECPs) (DMWR/NMWR only) <ecp>**. The following statement shall be included:

"**ENGINEERING CHANGE PROPOSALS**

Engineering Change Proposals (ECPs) will be submitted in accordance with AR 70-1 directly to (*enter the name and address of the responsible command or activity*) A reply will be furnished to you."

B.5.2.20 Modifications list **(DMWR/NMWR only) <modification>**. MWOs and ECPs shall be identified for all modifications which have been incorporated into the work required by the DMWR/NMWR. MWOs shall be reported as outlined in DA PAM 750-8. The applicable MWOs and the ECPs shall be listed (title and number). This listing shall be supplied by the major subordinate command (MSC). Alternatively, a statement shall be made stating that the modifications must be applied during the overhaul of the item. For example:

"**MODIFICATIONS**

All Modification Work Orders (MWOs), all minor alteration procedures (MAP) specified in the contract/work directive, and all ECPs listed in the *(insert DMWR or NMWR)* must be applied during the overhaul of the item. Refer to DA PAM 25-30 and DA PAM 750-10 for all published MWOs."

Source: https://assist.dla.mil -- Downloaded: 2016-12-09T23:32Z
Check the source to verify that this is the current version before use.

B.5.2.21 Deviations and exceptions **(DMWR/NMWR only) <deviation>**. The following statement shall be included.

"**DEVIATIONS AND EXCEPTIONS**

Requests for deviations or exceptions to this (*insert Depot Maintenance Work Requirement (DMWR) or National Maintenance Work Requirement (NMWR)*) will be processed in accordance with ISO 9000 Series standards, or equivalent."

B.5.2.22 Mobilization requirements **(DMWR/NMWR only) <mobreq>.** The following statement shall be included.

"**MOBILIZATION REQUIREMENTS**

All requirements of this (*insert DMWR or NMWR*) will be exempted or revised in the event of mobilization. Only those procedures necessary to return the (*insert equipment name*) to a serviceable condition will be performed. The exemptions and revisions are explained in supporting information work package (*insert appropriate work package sequence number*)."

B.5.2.23 Flight safety critical aircraft parts **(FSCAP) (Aircraft only) <fscapreq>**. The following statement shall be included.

"**FLIGHT SAFETY CRITICAL AIRCRAFT PARTS (FSCAP)**

A flight safety critical aircraft part is defined as any part, assembly, or installation whose failure, malfunction, or absence could cause loss of aircraft, serious damage to aircraft, death of crewmembers, or serious injury to crewmembers.

A critical characteristic is defined as any feature throughout the life cycle of a FSCAP, such as dimension, tolerance, finish, material or assembly, manufacturing process, inspection process, operation, field maintenance requirement, depot overhaul requirement, or other feature that if nonconforming, missing, or degraded, could cause failure or malfunction of a FSCAP."

B.5.2.24 Cost considerations **(DMWR/NMWR only) <cost>**. The following statement shall be included.

"**COST CONSIDERATIONS**

This work requirement shall be the basis for establishing the extent of overhaul while taking into consideration cost factors. A determination shall be made on all subassemblies/assemblies to replace worn or damaged components which are available in supply, if acquisition cost is less than the cost to repair and restore to the (*insert DMWR or NMWR*) standard. The cost to repair/restore any individual item with an established Maintenance Expenditure Limit (MEL) to the (*insert DMWR or NMWR*) standard shall not exceed the MEL, unless a waiver has been approved in accordance with AMC-R 750-51. This requirement does not apply to items exempted from MEL in accordance with AMC-R 750-51."

Source: https://assist.dla.mil -- Downloaded: 2016-12-09T23:32Z
Check the source to verify that this is the current version before use.

B.5.2.25 Supporting information for repair parts, special tools, TMDE, and support equipment **(Field/Aviation Maintenance Company (AMC) and above only) <supdata>**. When applicable, the following information shall include a reference to the common tools and equipment; special tools, TMDE, and support equipment; and the repair parts as shown below. The information in B.5.2.25.1 through B.5.2.25.3 applies only to field maintenance/Aviation Maintenance Company (AMC) and above.

B.5.2.25.1 Common tools and equipment. The following statement shall be included:

> "**COMMON TOOLS AND EQUIPMENT**
>
> For authorized common tools and equipment, refer to the Modified Table of Organization and Equipment (MTOE), CTA 50-970, Expendable/Durable Items (Except: Medical, Class V, Repair Parts, and Heraldic Items), CTA 50-909, Field and Garrison Furnishings and Equipment or CTA 8-100, Army Medical Department Expendable/Durable Items, as applicable to your unit."

B.5.2.25.2 Special tools, TMDE, and support equipment. A reference to the Repair Parts and Special Tools List (RPSTL) and MAC shall be included. When no special tools or equipment are required, it shall be so stated. If tools are to be fabricated, reference to the Illustrated List of Manufactured Items work package shall be made.

B.5.2.25.3 Repair parts. One of the two following statements shall be included.

> "Repair parts are listed and illustrated in the repair parts and special tools list (*insert TM number of RPSTL*)."

or

> "Repair parts are listed and illustrated in parts information work package (*insert appropriate work package sequence number)* of this manual."

B.5.2.26 Copyright credit line **<copyrt>**. TMs should not contain copyrighted material except as specified in the Federal Acquisition Regulations (FAR) and Defense Federal Acquisition Regulation (DFAR) Supplement. When copyrighted material is included in a TM, the TM author shall obtain prior written permission from the copyright owner or authorized agent for its use. The written permission shall contain a statement declaring whether or not a copyright credit line is required. When a copyright credit line is required, the information shall appear as the last paragraph of the general information work package.

B.5.2.26.1 Proprietary names. Trade names, copyrighted names, or other proprietary names applying exclusively to the product of one company shall not be used unless the items cannot be adequately described because of the technical involvement, construction, or composition. In such instances, lone, and if possible, several commercial products shall be listed, followed by the words "or equal." The same shall apply to manufacturers' part numbers or drawing numbers for minor parts where it is impractical to specify the exact requirements. If possible, the particular characteristics required for the "or equal" products shall be defined.

B.5.2.26.2 Advertising. Publication material shall not contain advertising matter.

Source: https://assist.dla.mil -- Downloaded: 2016-12-09T23:32Z
Check the source to verify that this is the current version before use.

B.5.3 Equipment description and data work package **<descwp>**. This work package shall be prepared and shall contain the descriptive data requirements listed in B.5.3.1 through B.5.3.6, as applicable. If the descriptive data is provided in a separate operator's manual, a paragraph referencing the equipment description and data in the operator's manual shall suffice. Additional equipment description and data required for a higher maintenance level, but not included in the operator's manual, shall be included. This work package shall not contain any operator or maintenance procedures.

B.5.3.1 Work package identification information **<wpidinfo>**. Work package identification information is required for this work package (refer to 4.7.9.1).

B.5.3.2 Initial setup information **<wpinfo>**. Initial setup information is not required for this work package.

B.5.3.3 Equipment characteristics, capabilities, and features **<eqpinfo>**. An overall description of the equipment **<eqpdesc>** shall be prepared, including general capabilities, special features, and other like information (e.g., applications, limitations) which will be helpful in the operation and maintenance of the equipment. Unless otherwise directed, the information may be in narrative or tabular format.

a. The equipment type shall be stated, as shall the following equipment features: portability or mobility, operational and special environment, and remote control.
b. Components and their functions shall not be described unless essential to continuity. For functional data, reference shall be made to theory of operation.
c. When equipment covered varies in scope and application or has several applications within an end item, a brief explanation of the multiple usages and a simple diagram showing all aspects of a typical application shall be prepared.
d. For **ammunition TMs**, packing and packaging information shall be prepared, including number of rounds per pack.

B.5.3.4 Location and description of major components **(Except Conventional Ammunition and Chemical Manuals) <locdesc>**. Equipment location information shall be prepared including external and internal views of the equipment used to show general features and all major components. This information shall not duplicate information contained in the equipment data requirements and the equipment characteristics, capabilities, and features.

a. The equipment and weapon systems configuration shall be described as follows:
   (1) A description of system areas and compartments shall be prepared, and the system equipment and components contained in the areas shall be identified. To identify and locate the listed system equipment the configuration description shall be supported by separate illustrations of each compartment and area. For **aircraft only**, a station diagram showing fuselage station, water line, and butt line, etc. shall be included (refer to FIGURE B-1).
   (2) The subsystems or equipment comprising the system shall be identified and described. Other equipment which is installed in the subject system compartments and areas need not be listed in the text or called out in the illustrations if they do not directly affect the operation or maintenance of the subject system. Descriptions of operator-attended equipment shall include general statements about the nature and purpose of the controls and indicators. The text shall be supported by illustrations.

Source: https://assist.dla.mil -- Downloaded: 2016-12-09T23:32Z
Check the source to verify that this is the current version before use.

(3) Descriptions and illustrations of associated-system equipment shall be limited to the major units of that equipment. The descriptions shall be more concise than those of the subject system equipment; otherwise, the same requirements shall apply. In the descriptions, emphasis shall be placed on associated systems equipment that constitutes operational or functional interfaces with the subject system. Such units shall be included in the system illustrations.

b. Illustrate the use of the equipment. Only information pertaining to the user shall be prepared.

c. Location and contents of end item and major component identification plates shall be illustrated. Modification information, and warranty plates, stencils, or location of serial numbers shall be illustrated.

B.5.3.5 Differences between models **<eqpdiff>**. Significant differences affecting interchangeability shall be identified. Specifically, differences associated with equipment models or units of the same model shall be indicated that would affect operator or maintenance actions. These differences shall be related explicitly to equipment model, part number, or serial number ranges in such a manner that the TM user can identify the specific equipment configuration involved. When model differences exist but have no effect on operation or maintenance, this fact shall be stated.

B.5.3.6 Equipment data **<eqpdata>**.

a. Performance data shall be prepared, including numerical and other standard-related data applying to operational and maintenance functions. The equipment data shall summarize the specific capabilities and limitations of the equipment and other critical data needed by the TM user for maintenance of the equipment. Vehicle and cargo space dimensions and metric and other equivalents shall be included.

b. For systems, a list of the environmental control requirements, such as limited temperature, humidity, or other limited conditions shall be prepared. Reference shall be made to the work package(s) containing information on damage to be expected from exceeding these limits and procedures for minimizing the damage.

c. A summary shall be prepared that lists the effects of weather conditions on equipment affecting system capability or causing equipment damage. This summary shall include references to any special servicing procedures that must be accomplished because of climatic changes, such as adding antifreeze to coolants.

d. Instructions for the use, transportation, handling, storage, or disposal of such substances as fuels, toxic and hazardous substances, chemicals, ordnance, and munitions shall be prepared. These instructions shall meet the applicable requirements of the Federal Environmental Protection Standards (standards to be provided by the acquiring activity).

e. The energy efficiency rating shall be included for products that directly consume energy in normal operations and that commonly have a method of expressing energy efficiency.

Source: https://assist.dla.mil -- Downloaded: 2016-12-09T23:32Z
Check the source to verify that this is the current version before use.

B.5.4 Theory of operation work package **(Except Conventional and Chemical Ammunition) <thrywp>**. Theory of operation shall be prepared to provide the maintenance technician with adequate background information to support and perform maintenance tasks and troubleshooting on the weapon system, equipment, or components. DMWR/NMWR shall include this work package(s) as required by the acquiring activity. The amount of detail and complexity of the theory of operation presentation shall be in accordance with the Logistics Management Information (LMI) maintenance concept, the Maintenance Allocation Chart (MAC) or an approved maintenance plan. Theory of operation shall be provided as described in B.5.4.1 through B.5.4.3. This work package shall not contain any operator or maintenance procedures.

B.5.4.1 Work package identification information **<wpidinfo>**. Work package identification information is required for this work package (refer to 4.7.9.1).

B.5.4.2 Initial setup information **<wpinfo>**. Initial setup information is not required for this work package.

B.5.4.3 Theory presentation. Theory of operation shall consist of a functional narrative to explain the weapon system, equipment, and component operation (electrical/electronic, hydraulic, pneumatic, and mechanical). Refer to MIL-HDBK-1222 for an example of theory of operations. Block diagrams, functional flow diagrams, schematics, and other illustrations shall be included to support the text. Basic theory, normally found in textbooks, shall not be included. If the TM covers more than one model of equipment, or more than one configuration of weapon system, differences shall be explained or separate work packages may be used. Additional theory requirements are outlined below.

a. When necessary, introductory general information <**intro**> may precede the theory of operation narrative.
b. For simple systems or equipment/components, all theory <**systhry**> may be included in a single work package.
c. If the relative complexity of the weapon system/equipment is such that it is reasonable to first present the theory of the end item as a unit and then present the theory of its major system, subsystems, and component, it shall be presented in a series of work packages. A separate theory of operation work package shall be developed for each aircraft system. The work package may contain the functional operation for the system <**systhry**>, its subsystems <**ssysthry**> and its components (line replacement units (LRUs) <**lruthry**> and shop replacement units (SRUs)) <**sruthry**>, or when necessary for usability or clarity, subsystem and component theory of operation may be provided in separate work packages. Subsystem component theory of operation may be included in either the subsystem theory of operation work package or in a separate component theory of operation work package. Detailed component functional operation, common circuitry and wiring diagrams shall not be included unless necessary to understand system/subsystem function.

Source: https://assist.dla.mil -- Downloaded: 2016-12-09T23:32Z
Check the source to verify that this is the current version before use.

d. Theory narrative shall be to a depth necessary to support the technician in fault isolation to the level directed by the LMI and/or maintenance plan. The operation of the weapon system and related systems/components shall be presented in a logical flow. Significant input, output, and control signals, supply voltages and power supply output voltages shall be identified. If the equipment operates in more than one mode, each mode shall be explained and supported by functional block diagrams. Theory of operation shall describe detailed circuitry of all repairable components as directed by the LMI/maintenance plan. Internal circuits, their relationship to each other, input and output signals, waveforms and time-phase relationship to significant waveforms shall be included when required to understand detailed equipment operation. Theory shall not be prepared for nonreparable, throw-away components.

B.5.5 General information work package **(Preventive Maintenance Services Manual only) <pms-ginfowp>**. This work package shall be prepared for Preventive Maintenance Services manuals and shall contain the content requirements provided in B.5.5.1 through B.5.5.4.

B.5.5.1 Work package identification information **<wpidinfo>**. Work package identification information is required for this work package (refer to 4.7.9.1).

B.5.5.2 Initial setup information **<wpinfo>**. Initial setup information is not required for this work package.

B.5.5.3 Maintenance activities **<scope>**. The following text within quotes shall be included verbatim. Italicized text shall be replaced with the appropriate information.

> The Preventive Maintenance Services Inspection Checklist work package contains complete requirements for a (*insert specific inspection interval(s) here*) for the (*insert specific equipment here*). It does not contain instructions for repair, adjustment, or other means of rectifying conditions, nor does it contain instruction for troubleshooting to find causes for malfunctioning. Specific tolerances, limits, etc., can be found in the applicable maintenance manuals. Use of the alphabetical index in the applicable manuals will facilitate locating the required information."

B.5.5.4 General information **<geninfo>**. The following text in quotes shall be included verbatim. Italicized text shall be replaced with the appropriate information.

> "**INSPECTION REQUIREMENTS**.
>
> The inspection requirements contained in this work package are stated in such a manner as to establish when certain equipment is to be inspected and what conditions are desired/undesired. Compliance with the provisions outlined herein is required in order to ensure that latent defects are discovered and corrected before malfunctioning or serious trouble results. Inspection requirements are arranged, as nearly as possible, according to the manner in which they will be performed. The requirements are divided into groups and listed under area heading in the "How To Use This Manual" portion of this manual and Figure (*insert figure number here*).

Source: https://assist.dla.mil -- Downloaded: 2016-12-09T23:32Z
Check the source to verify that this is the current version before use.

INSPECTION INTERVALS

The *(insert inspection interval here)* inspection will be performed every (*insert the specific aircraft hours here*) flight hours or (*insert specific calendar days here*) days, whichever comes first. The (*insert the specific aircraft hours here*) will not be extended except in actual operational emergencies. In no case shall the aircraft intentionally be scheduled for a flight that will cause it to exceed the (*insert the specific aircraft hours here*) inspection due time. The (*insert specific calendar days here*) interval is a full (*insert the number of weeks here if applicable*) weeks. That is, if a (*insert specific calendar days here*) is done on Tuesday, the next (*insert specific calendar days here*) days inspection will not be due *until (insert the specific day here) (insert the specific number of weeks here*) later.

SPECIFIC NON-INSTALLED EQUIPMENT ON AIRCRAFT

This work package may contain inspection requirements applicable to specific equipment not installed on your aircraft. Those requirements should be disregarded.

DA FORMS

DA Form 2408-13-1 will be used to record all deficiencies or shortcomings discovered during the (*insert specific inspection interval here*). Use DA PAM 738-751 to properly complete this form.

SPECIAL INSTRUCTIONS

The (*insert inspection interval here*) will not be exceeded except in actual operational emergencies. When operational emergencies require aircraft operation beyond the normal inspection due-time, a circled red X status symbol and an appropriate statement (to include authority) must be entered in Part I, Fault Information block of DA Form 2408-13-1 (Aircraft Inspection and Maintenance Record) until such time as the inspection is complete. When inspections are delayed to meet emergency requirements, commanders will assure that the aircraft status symbol reverts to a red "X" and that delayed inspections are accomplished immediately upon termination of the actual emergency. When unusual local conditions of environment, utilization, mission, experience of flight crew and maintenance personnel, periods of inactivity, etc., are encountered, the maintenance officer will, at his discretion, increase the scope and/or frequency of maintenance of inspections as necessary to ensure safe flight.

Aircraft that are down, Not Mission Capable due to Supply (NCMS), or Not Mission Capable due to Maintenance (NMCM), are deferred from the (*insert inspection interval here*) inspection until the aircraft is return to flyable status. When the NMCS and/or NMCM condition is cleared from the aircraft that has been deferred, the (*insert inspection interval here*) must be done before the first flight. It is the maintenance office's responsibility to determine those inspections necessary during NMCS and/or NMCM to preserve the aircraft. Maintenance situations and climates vary too much to permit a definition of an adequate inspection of the aircraft in NMCS and/or NMCM status.

Source: https://assist.dla.mil -- Downloaded: 2016-12-09T23:32Z
Check the source to verify that this is the current version before use.

Accessing procedures and detailed inspection criteria can be found in the applicable maintenance manuals. Use the alphabetical index in the applicable manuals. Unless otherwise directed, removed panels and opened doors will be reinstalled and closed upon completion of each area inspection.

The total man-hour (M/H) requirements for a complete (*insert inspection interval here*) inspection is (*insert total number of man-hours here*) M/H.

REPORTING ERRORS AND RECOMMENDING IMPROVEMENTS

You can help improve this TM. If you find any mistakes or if you know of a way to improve the procedures, please let us know. Mail the DA Form 2028 directly to: (*insert mailing address*). You may also send in your recommended changes via electronic mail, by fax, or by the World Wide Web. Our fax number is (*insert DSN and commercial number of proponent)*. Our e-mail address is (*insert e-mail address of proponent*). Instructions for sending an electronic DA Form 2028 may be found at the back of the applicable technical manual. For World Wide Web use https://amcom2028.redstone.army.mil. A reply will be furnished to you.

OZONE DEPLETING CHEMICALS

(*insert appropriate ODC statement here*)

HAZARDOUS MATERIALS (HAZMAT)

(*insert appropriate HAZMAT statement here*)

INSPECTION AREAS

Inspection areas are shown in (*enter WP(s) title and figure number*)."

B.5.6 General information work package **(Phased Maintenance Inspection Manual only) <pm-ginfowp>**. This work package shall be prepared for Preventive Maintenance Inspection manuals and shall contain the content requirements provided in B.5.6.1 through B.5.6.3.

B.5.6.1 Work package identification information **<wpidinfo>**. Work package identification information is required for this work package (refer to 4.7.9.1).

B.5.6.2 Initial setup information **<wpinfo>**. Initial setup information is not required for this work package.

B.5.6.3 General information **<geninfo>**. The information in 5.6.3.1 and 5.6.3.2 below shall be included.

Source: https://assist.dla.mil -- Downloaded: 2016-12-09T23:32Z
Check the source to verify that this is the current version before use.

B.5.6.3.1 Phased schedule. One of the following shall be included verbatim as applicable:

"**PHASED SCHEDULE**

The phased maintenance inspection checklist contains requirements for inspection of the (*insert aircraft model*) aircraft on a phased schedule having a (*insert flight hour cycle*) hour (flight hours) cycle with (insert phase hours) hour phases. Each requirement included herein is designated for accomplishment at least once, but not more than (*insert number of phases*) times during the (*insert flight hour cycle*) hour cycle."

OR

"**PROGRESSIVE PHASED MAINTENANCE SCHEDULE**

The progressive phased maintenance inspection checklist contains requirements for inspection of the (*insert aircraft model*) aircraft on a phased schedule of (*insert inspection interval*) hours intervals."

B.5.6.3.2 Additional general information. The following additional text shall be included verbatim:

"EXCEEDING THE PHASED SCHEDULE

The phased maintenance inspection intervals designated are the maximum and shall not be exceeded except in actual operational emergencies as explained herein. It is the Commander's responsibility to determine (on an individual aircraft basis) when inspection intervals may be exceeded. For this purpose, operational emergencies are conditions of combat, or conditions of disaster which necessitate flight to evacuate aircraft or personnel. When aircraft are operated beyond the normal inspection due time because of such emergency situations, a circled red X status symbol and an appropriate statement (to include authority) must be entered on the appropriate aircraft form as specified in DA PAM 738-751 until such time as the inspection is complete. When inspections are delayed to meet emergency requirements, Commanders will assure that the aircraft status symbol reverts to a red X and that delayed inspections are accomplished immediately upon termination of the actual emergency. When unusual local conditions (utilization, type of mission, personnel, periods of inactivity, environmental conditions, etc.) dictate, it is the prerogative and responsibility of the Maintenance Officer to increase the scope and/or frequency of maintenance or inspection as necessary to ensure safe operation (TM 1-1500-328-23).

MAINTENANCE ACTIVITIES

The inspections prescribed by this checklist will be accomplished at specified phases by Aviation Maintenance Company (AMC) activities with assistance of Aviation Support Battalion (ASB) and Depot Maintenance activities when required. The inspection of the part/component is visual unless stated otherwise.

Source: https://assist.dla.mil -- Downloaded: 2016-12-09T23:32Z
Check the source to verify that this is the current version before use.

LIMITATIONS

The checklist does not contain instructions for repair, adjustment or other means of rectifying conditions. Neither does it contain special tolerances, limits or instructions for special troubleshooting to find causes for malfunctions. Such data will be obtained from the latest issue of the aircraft (*insert applicable aircraft technical manuals*) series Maintenance Manuals.

CHANGEOVER TO THE PHASED MAINTENANCE SYSTEM

Changeover shall be accomplished in accordance with instructions provided in (*insert appropriate TM/TB*) entitled, "*Insert title*". The requirements of this TM/TB must be accomplished prior to implementation of Phase 1 inspection requirements specified in this checklist.

PRE-INSPECTION MAINTENANCE TEST FLIGHT (MTF)

A pre-inspection MTF to duplicate non-hazardous equipment problems, determine unsatisfactory conditions, determine equipment operation problems, etc., is recommended prior to start of aircraft disassembly for phased maintenance inspection. The decision to perform the pre-inspection MTF, however, shall be the responsibility of the unit Maintenance Officer.

SPECIAL INSPECTIONS, CALENDAR INSPECTIONS AND LUBRICATION REQUIREMENTS

Special inspections, calendar inspections and lubrication requirements contained in (*insert applicable aircraft technical manual*) and those listed on the aircraft's DA Form 2408-18 shall be reviewed and accomplished in accordance with the "inspection due" requirements specified in those documents.

TIME BETWEEN OVERHAUL (TBO) AND RETIREMENT LIFE ITEMS CHECK

Prior to start of the applicable phased maintenance inspection, a check will be made of components and their remaining operating hours prior to removal. The latest issue of the aircraft's (*insert applicable aircraft technical manual*) and DA Form 2408-16 shall be referred to for a complete listing of components and their TBO and retirement life.

USING THE PHASED INSPECTION CHECKLIST

1. A new checklist shall be used each time phased maintenance is due on the aircraft. This checklist is arranged such that it can be separated by area and distributed to the maintenance crew. For use of the checklist refer to DA PAM 738-751.
    a. Space is provided on each checklist form for entering the following data:
        (1) The type of the maintenance inspection phase being performed or the phase type being performed (i.e., phase, desert, reset).
        (2) Aircraft serial number.
        (3) Date of the inspection.
        (4) Total hours. (Block provided for local use.)

Source: https://assist.dla.mil -- Downloaded: 2016-12-09T23:32Z
Check the source to verify that this is the current version before use.

b. For each inspection item a column is provided for entering the following data:

(1) Status of the aircraft as the result of the inspection requirement.

(2) Aircraft fault and/or remarks indicated by the inspection requirement.

(3) Action taken to correct the fault.

(4) Personnel Identifier (PID) of person performing the corrective action.

PHASE NUMBERS/TYPES

In the column headed 'Inspect Phase Type.' and adjacent to the sequence number of each inspection requirement, there will appear "*Insert appropriate codes/explanations*".

The word "ALL" indicates that the inspection requirement shall be accomplished at each phase. A number represents the phase number or flight hours (time between phases) at which that inspection requirement is to be accomplished. When more than one number or flight hour is listed the inspection is required at each interval given.

STATUS SYMBOLS

The status column will be used in accordance with DA PAM 738-751.

FAULTS AND/OR REMARKS

Fault entries in the Faults and/or Remarks column will be in accordance with DA PAM 738-751.

ACTION TAKEN

a. Entries in the Action Taken column will be in accordance with 738-751

b. If no fault was found, an appropriate remark shall be entered in the column to indicate that the inspection was accomplished, i.e., 'Inspected and found OK'. If an inspection item is not applicable to the particular inspection or to specific equipment installed on an individual aircraft, a 'N/A' entry is required.

PERSONNEL IDENTIFIER (PID)

The PID of the person correcting the indicated fault shall be entered in accordance with DA PAM 738-751.

FINAL RECORDS CHECK

After all corrective actions have been completed and following completion of the phased inspection, the Technical Inspector or designated supervisor shall verify that all applicable forms and records have been properly updated. All uncorrected faults shall be entered on applicable aircraft forms in accordance with DA PAM 738-751. A Final Records Checklist shall be used is to ensure forms and records have been inspected for completeness and accuracy prior to release of the aircraft from the phased maintenance inspection. The PID of the inspector verifying the final records check shall be entered adjacent to the indicated form or record on the Final Records Checklist. The PID entered shall be registered on the Signature Sheet adjacent to that person's signature.

Source: https://assist.dla.mil -- Downloaded: 2016-12-09T23:32Z
Check the source to verify that this is the current version before use.

SIGNATURE SHEET

All personnel performing inspection and/or maintenance tasks shall place their signatures and PID on the signature sheet. The purpose of the signature sheet is to provide a correlation between PID entered on the individual checklist sheets and the actual names of the personnel accomplishing these tasks.

MAINTENANCE OPERATIONAL CHECKS

After the completion of any required corrective actions to any of the components of a functional system of the aircraft, maintenance operational checks (MOC) shall be performed on that system to determine the effectiveness of the maintenance actions performed and to verify the proper operation of that system. These MOC shall be performed in accordance with TM 1-1500-328-23. DA Form 2408-13-1 may be used to record and sign off the Maintenance Operational Checks performed.

MAINTENANCE TEST FLIGHT

When all required inspections have been accomplished and initialed in accordance with the above procedure, the MTF shall be performed in accordance with the requirements of (*insert applicable aircraft technical manuals*) and TM 1-1500-328-23 using the MTF form in the MTF technical manual.

CHECKLIST DISTRIBUTION

The completion of each phased maintenance inspection shall be recorded on applicable forms as prescribed by DA PAM 738-751. The signed checklist, together with all forms prescribed by DA PAM 738-751, will be filed. Disposition will be in accordance with DA PAM 738-751 or specific instructions in the applicable aircraft technical manual.

INSPECTION AREAS

(*Insert WP title and figure number*) reflects the inspection areas of the (*insert applicable aircraft model*) aircraft. Those areas are titled as shown. Figure (*insert number*) shows the location of access doors and panels which require removal at various phased maintenance inspections

REPORTING ERRORS AND RECOMMENDING IMMPROVEMENTS.

(*insert appropriate reporting errors statement here (see para B.5.5.4)*)”

B.6 NOTES.

The notes in section 6 apply to this appendix.

Source: https://assist.dla.mil -- Downloaded: 2016-12-09T23:32Z
Check the source to verify that this is the current version before use.

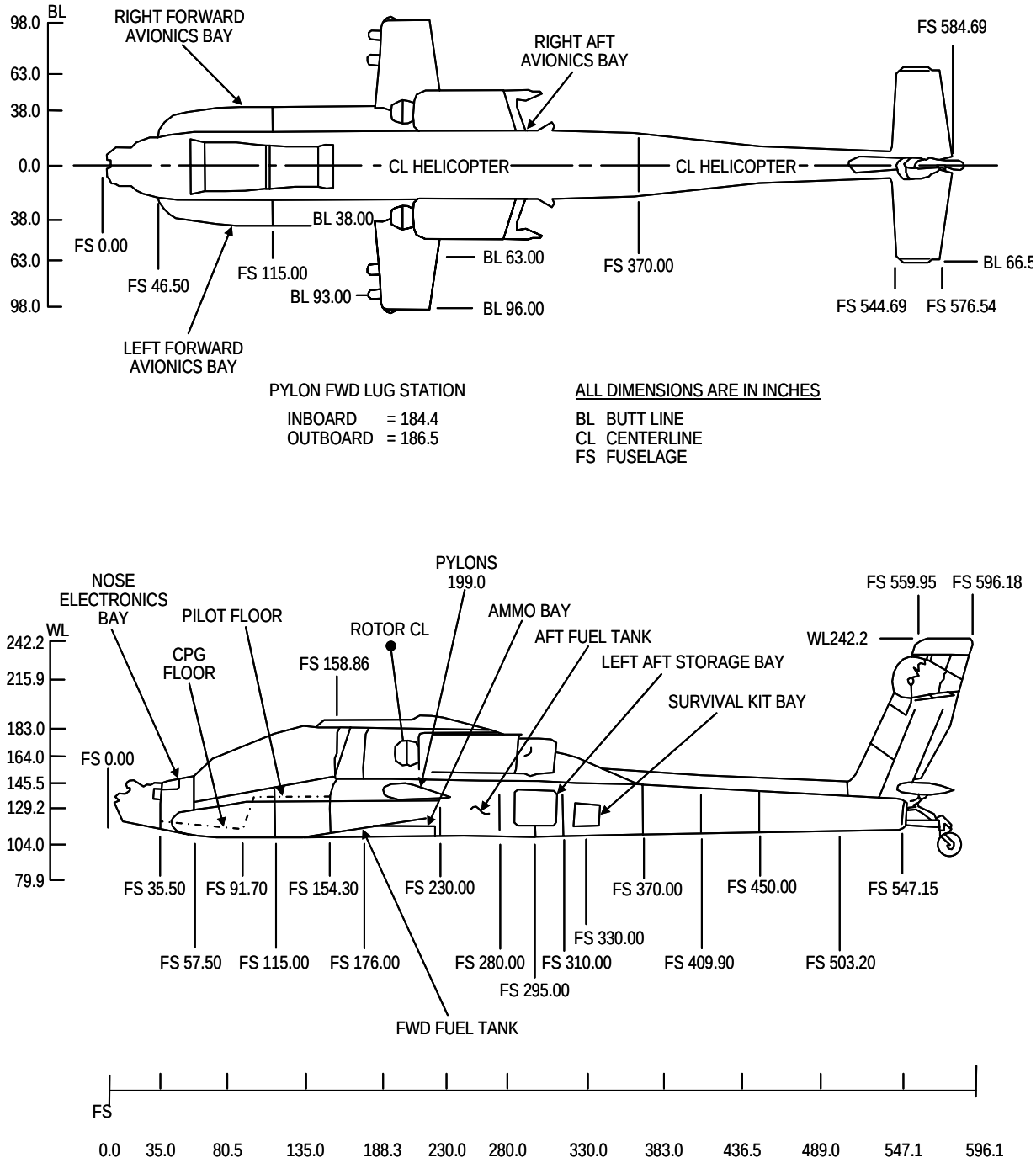

FIGURE B-1. Example of a station diagram.

Source: https://assist.dla.mil -- Downloaded: 2016-12-09T23:32Z
Check the source to verify that this is the current version before use.

This page intentionally left blank.

Source: https://assist.dla.mil -- Downloaded: 2016-12-09T23:32Z
Check the source to verify that this is the current version before use.

APPENDIX C

OPERATOR INSTRUCTIONS

C.1 SCOPE.

C.1.1 Scope. This appendix establishes the technical content requirements for the preparation of operator instructions for major weapon systems, and their related systems, subsystems, equipment, weapons replacement assemblies (WRAs), and shop replacement assemblies (SRAs). This Appendix is a mandatory part of this standard. The information contained herein is intended for compliance. The requirements are applicable for all maintenance levels through overhaul (depot) including Depot Maintenance Work Requirements (DMWRs) and National Maintenance Work Requirements (NMWRs).

C.2 APPLICABLE DOCUMENTS.

The applicable documents in section 2 apply to this appendix.

C.3 DEFINITIONS.

The definitions in section 3 apply to this appendix.

C.4 GENERAL REQUIREMENTS.

C.4.1 General. Operator instructions shall be prepared for weapon systems, major equipment, components, and applicable support and interface equipment. Operating instructions shall describe the operation authorized for the operator/crew. Procedures and supporting illustrations shall be prepared so that personnel can prepare the weapon system/equipment for operation, identify and locate operational controls and indicators, and operate the weapon system/equipment safely and efficiently in both normal and emergency conditions. Unless otherwise specified, an operator instructions chapter shall be used for operator data. Multiple chapters should only be used for equipment that is very complex or that has multiple configurations.

C.4.2 Maintenance level applicability. Requirements contained in this standard are applicable to all maintenance levels unless specifically noted in bold and in parentheses (i.e., **Field**). The labeled requirements shall be applicable to all TMs containing that maintenance level. An explanation of all applicable Department of Army maintenance levels is provided in section 3.

C.4.3 Preparation of digital data for electronic delivery. Technical manual data prepared and delivered digitally in accordance with this standard shall be Extensible Markup Language (XML) tagged using the Document Type Definition (DTD) for Maintenance Instructions and the XML Stylesheet Language (XSL), or style sheets in accordance with MIL-STD-2361. Refer to 4.6 for information on obtaining or accessing this DTD. XML tags used in the modular DTD are noted throughout the text of this standard in bracketed, bold characters (i.e., **<ctrlindwp>**) as a convenience for the TM author and to ensure that the tags are used correctly when developing a document instance.

Source: https://assist.dla.mil -- Downloaded: 2016-12-09T23:32Z
Check the source to verify that this is the current version before use.

C.4.4 Use of the DTD/XSLs. The DTD referenced in this standard interpret the technical content and structure for the functional requirements contained in this standard and are mandatory for use. The XSLs referenced herein interpret the style and format. As specified by the contracting activity, XSLs, or style sheets may be used to produce final reproducible paper copy for all TMs prepared in accordance with this standard. For additional information on the DTD and specific XSLs refer to MIL-STD-2361.

C.4.5 Content structure and format. The examples provided herein are an accurate representation of the content structure and format requirements contained in this appendix and shall be followed to permit the effective use of the DTD for Operator Instructions.

C.4.6 Style and format. This standard provides style and format requirements for the technical content requirements described in this appendix. These requirements are considered mandatory and are intended for compliance.

C.4.7 Work package development. Technical manual data developed in accordance with this standard shall be divided into individual, stand alone units of information called work packages. A work package shall consist of descriptive, operational, maintenance, troubleshooting, support, or parts information for the weapon system or equipment.

C.4.8 Safety devices and interlocks. Information shall be prepared pertaining to the purpose and location of all safety devices and interlocks in conjunction with the pertinent procedures.

C.4.9 Electrostatic discharge (ESD) sensitive parts. If the equipment contains ESD sensitive parts, components, or circuits, cautions and ESD labels shall be incorporated into the applicable tasks and procedures to ensure ESD sensitive parts are not damaged or degraded during maintenance and operation. Refer to 4.7.20 for requirements on labeling with ESD. Actions which could damage ESD sensitive parts, but which are not directly related to handling or operation of ESD sensitive parts, shall not be annotated with the ESD acronym, but shall be preceded by a caution statement.

C.4.10 Nuclear hardness. If the weapon system/equipment has nuclear survivability requirements (for example, over pressure and burst, thermal radiation, electromagnetic pulse, or transient radiation effects on electronics), cautions and Hardness-Critical Processes (HCP) labels shall be incorporated into the applicable tasks and procedures to ensure the hardness of the equipment is not degraded during handling or operation. Refer to 4.7.19 for requirements on labeling with HCP. Actions which could degrade hardness, but which are not directly involved in establishing nuclear hardness, shall not be annotated with the acronym, but shall be preceded by a caution statement.

C.4.11 Selective application and tailoring. This standard contains some requirements that may not be applicable to the preparation of all technical manuals. Selective application and tailoring of requirements contained in this standard are the responsibility of the acquiring activity and shall be accomplished using Appendix A, Technical Manual Content Selection Matrixes. The applicability of some requirements is also designated by one of the following statements: unless specified otherwise by the acquiring activity; as or when specified by the acquiring activity.

Source: https://assist.dla.mil -- Downloaded: 2016-12-09T23:32Z
Check the source to verify that this is the current version before use.

C.5 DETAILED REQUIREMENTS.

C.5.1 Preparation of operator instructions. Operator instructions shall be prepared and subdivided into individual work packages that provide the operator of the weapon system/equipment with descriptions and use of controls and indicators and operation of the weapon system/equipment under usual, unusual and emergency conditions. Weapon system and equipment operator data shall be developed in narrative or tabular form, or by whatever method is most simple or effective to convey the specific TM application.

C.5.2 Operator instructions work packages.

C.5.2.1 Work package content. Work packages shall include WP identification information, initial setup information, and all required operator instruction information. When initial setup information differs for specific operator instructions, additional work packages shall be developed. Work packages shall stand-alone and contain complete start-to-finish operator procedures. The words "**END OF WORK PACKAGE**" shall be placed below the last data item (i.e., text, illustration, etc.) of the work package. The operator instructions work packages described in C.5.2.2 shall be prepared, as applicable.

C.5.2.2 Types of operator instructions work packages. The following types of operator instructions work packages shall be developed, as applicable. Note however, in cases where operating instructions are divided by crew station assignment (or auxiliary equipment), work packages shall be developed to support each crew-served station. Refer to MIL-HBK-1222 for typical examples of operating instructions work packages.

a. Description and use of controls and indicators work package <**ctrlindwp**>.
b. Operation under usual conditions work package(s) <**opusualwp**>.
c. Operation under unusual conditions work package(s) <**opunuwp**>.
d. Emergency work package(s) **<emergencywp>.**
e. Stowage and decal/data plate guide work package <**stowagewp**>.
f. On-vehicle equipment loading plan work package <**eqploadwp**>.

C.5.2.3 Description and use of controls and indicators work package **<ctrlindwp>**. Information shall be prepared for the description and use of all system or equipment controls and indicators. A description and use of controls and indicators shall be prepared for each equipment, assembly, or control panel having controls and indicators. Controls and indicators shall be described using one of the two following options (see C.5.2.3.3 or C.5.2.3.4) and shall be used through out the work package.

C.5.2.3.1 Work package identification information **<wpidinfo>**. Work package identification information is required for this work package (refer to 4.7.9.1).

C.5.2.3.2 Initial setup information **<wpinfo>**. Initial setup information is not required for this work package.

Source: https://assist.dla.mil -- Downloaded: 2016-12-09T23:32Z
Check the source to verify that this is the current version before use.

C.5.2.3.3 Controls and indicators description tabular option. This option shall describe each control and indicator in a tabular format (refer to FIGURE C-1). The work package shall start with a short introduction <**intro**> that identifies the basic system, area, or other breakdown. The introduction shall be followed by one or more controls and indicators (**standard information**) **<ctrlindtab>** with an associated illustration <**figure**> for each control and indicator. The number of controls and indicators standard information tables required is dependent on several factors. These factors include but are not limited to system complexity, different users (crew members/stations) or configuration differences. For each control and indicator, the following entries shall be provided.

a. An index number **<key>** is used on the illustration to locate and identify the control or indicator on the illustration.
b. The name (nomenclature) **<ctrlind>** of the control or indicator as it appears on the equipment. Controls and indicators that are not labeled, such as the accelerator or brake pedals, shall be identified. Each control and indicator shall be clearly labeled as it appears on the equipment.
c. The function of the control or indicator **<function>** shall be described.

C.5.2.3.4 Controls and indicators description narrative option. This option provides a narrative approach to describe each control and indicator. This textual approach shall begin with a figure <**figure**> illustrating the control or indicator that is being described. The figure shall be followed by paragraphs **<ctrlinddesc>** describing each control or indicator shown in the figure. The narrative option for controls and indicators shall contain the same items as given in paragraph C.5.2.3.3a-c above. More than one figure and controls and indicators description may be used to improve user understanding.

C.5.2.4 Operation under usual conditions work package **<opusualwp>**. Instructions to operate the weapon system/equipment and auxiliary equipment in all modes of operation shall be prepared. Any combination of control settings that will create a hazard to personnel or cause damage to equipment shall be preceded by a warning or caution. Instructions to ensure proper grounding of equipment shall be prepared. The operational tasks **<opertsk>** described in C.5.2.4.1 through C.5.2.4.10 shall be included, as applicable.

C.5.2.4.1 Work package identification information **<wpidinfo>**. Work package identification information is required for this work package (refer to 4.7.9.1).

C.5.2.4.2 Initial setup information **<wpinfo>**. Initial setup information is required for this work package (refer to 4.7.9.2).

C.5.2.4.3 Security measures for electronic data **<secref>**. Instructions for handling, loading, purging, overwriting, or unloading classified electronic data under usual conditions. These instructions shall be developed when the systems are classified or have non-volatile on-board memory that requires to be cleared prior to transportation or other action that allows the data to be accessed by unauthorized personnel. Instructions shall meet the requirements of current regulations as they pertain to automation security.

Source: https://assist.dla.mil -- Downloaded: 2016-12-09T23:32Z
Check the source to verify that this is the current version before use.

C.5.2.4.4 Siting requirements <**site**>. When siting instructions peculiar to the equipment exist, those requirements shall be prepared. Operational features shall be considered, such as the following.

a. Location.
b. Proximity to power sources.
c. Effective ranges.
d. Terrain requirements to avoid screening reflections, ground clutter, and other poor operational conditions due to terrain.
e. Technical requirements.
f. Shelter locations.
g. Compensating for adverse siting conditions.
h. When the equipment contains large components, such as towers and antennas, that require orientation to a baseline during siting.
i. Mobile equipment oriented during installation.

C.5.2.4.5 Shelter requirements <**shelter**>. When equipment normally housed in a permanent or semi-permanent shelter (other than a military truck, van, or transportable shelter) during use, the following information shall be prepared.

a. Amount of floor, wall, and height space required.
b. A plan for a typical layout.
c. Required weight capacity of the building floor.
d. Dimensions required for installed equipment.
e. Total weight that the floor must support and the area in square feet over which the total weight will be distributed.
f. Environmental conditions (e.g., venting).
g. Power requirements.
h. Unusual requirements specific to equipment, such as air-conditioning.
i. Architectural and engineering data on beam sizes, lengths, bending moments, and required supports shall not be included.

C.5.2.4.6 Assembly and preparation for use <**prepforuse**>. Procedures shall be prepared when unpacking, assembly, and installation is required. When the equipment is shipped or delivered in specially designed containers, unpacking instructions shall be prepared. If the containers are to be used again, kept for future use, turned in to supply, or if any special disposition is required, the necessary procedures shall be prepared. Assembly and installation procedures shall be prepared when needed. These instructions shall be supported by illustrations. As applicable, power requirements, connections, and initial control settings needed for installation purposes shall be included.

C.5.2.4.7 Initial adjustments, before use, and self-test <**initial**>. Procedures shall be prepared when any routine checks, self-test, or adjustments that the operator must make before putting the equipment in operation is required.

Source: https://assist.dla.mil -- Downloaded: 2016-12-09T23:32Z
Check the source to verify that this is the current version before use.

C.5.2.4.8 Operating procedures **<oper>**. Operating instructions shall be prepared. As applicable, the following operating instructions shall be developed.

a. All steps necessary to bring the equipment from OFF through STANDBY condition to full operation, including all necessary warnings and cautions.
b. Procedures for each mode of operation, e.g., manual, automatic, local, remote, etc. The use and relative advantage of each mode shall also be described.
c. Description of the equipment anti-jamming and interference reduction features, the advantage of each feature, and the operating procedures to be followed. Supporting illustrations (such as indicator displays, waveforms, etc.) shall be included which provide typical observations of jamming and interference for evaluation by the operator.
d. Operator turn-off procedures, including all steps necessary to bring the equipment from full operation through STANDBY to OFF condition.
e. Operating instructions for misfire, hangfire, and other procedures applicable to ammunition.
f. Operating procedures explaining how the equipment is operated in conjunction with auxiliary equipment or how it operates when integrated with other equipment.
g. When specified by the acquiring activity, operating procedures containing the identification, loading, initializing and downloading of applicable operational and diagnostic software shall be included. Identification of the software shall include the purpose, configuration applicability and version information. Procedures that verify that the proper software has been loaded and is operating properly shall also be included. Examples of specific types of data that may be applicable to these work packages are:
   (1) Descriptions of screen data and interpretation of message formats.
   (2) Operator actions based on screen display.
   (3) Data entry by the Operator.
   (4) Saving or purging data.
   (5) Processing of messages.
   (6) Software transfer procedures.
   (7) Reviewing message and entry formats.

C.5.2.4.8.1 Operating procedure considerations. The following considerations should be taken into account when preparing operating procedures.

a. Initial safety requirements (actions, inspections, and emergency turn-off procedures).
b. If a particular operating procedure or step is assigned to a specific crew-served position (e.g., gunner), the assignment must be indicated.
c. Connection of any accessory equipment not permanently connected.
d. Instructions for obtaining or confirming the presence of all critical inputs such as power, coolant, air, signal, air-conditioning, etc. Specific values for critical inputs (power, coolant, air, etc.) shall also be included.
e. Procedures for setting controls and making adjustments which must be accomplished by the operator prior to equipment turn-on.
f. Procedures for determining operational readiness and the acceptable indications expected from built-in indicators, such as meters, lamps, gages, displays, and recorder readouts.

Source: https://assist.dla.mil -- Downloaded: 2016-12-09T23:32Z
Check the source to verify that this is the current version before use.

g. Milestones in the operational status of the equipment, indicated by brief statements, such as “The generator is now in STANDBY.”

h. Visual or audible observations which occur as a result of an operator action, such as boom lowering, sweep rotation, blower motor running, etc.

C.5.2.4.8.2 Decals and instruction plates **<instructplt>**. Decals and operating instruction plates located on the equipment, which are essential for operation, shall be clearly illustrated, so that all information is legible. Related warning and caution decals and plates shall be included. An illustration(s) shall be prepared to show the location of all applicable decals and plates.

C.5.2.4.9 Operating auxiliary equipment **<operaux>**. If applicable, procedures shall be prepared for putting the auxiliary equipment into operation, operating it, and putting it in standby or shutdown status. If these procedures are published in another TM covering the auxiliary equipment, reference shall be made to that TM in accordance with 4.7.23.1.

C.5.2.4.10 Preparation for movement **<prepmove>**. Preparation for movement procedures shall be prepared if the equipment is designed for movement and it can be readied for movement by the operator. Procedures shall be prepared for actions such as disassembly, folding, and telescoping. Illustrations shall be prepared, as required, to support the text. This information shall not duplicate the “assembly and preparation for use” requirements contained in C.5.2.4.6.

C.5.2.5 Operation under unusual conditions work package **<opunuwp>**. Instructions shall be prepared for operation under unusual conditions. Preventive or protective measures to be taken beyond the operator's capabilities shall be identified. Instructions to ensure proper grounding of equipment shall be prepared, as applicable.

C.5.2.5.1 Work package identification information **<wpidinfo>**. Work package identification information is required for this work package (refer to 4.7.9.1).

C.5.2.5.2 Initial setup information **<wpinfo>**. Initial setup information is required for this work package (refer to 4.7.9.2).

C.5.2.5.3 Operations under unusual tasks **<opunutsk>**. The operational tasks described in C.5.2.5.1 through C.5.2.5.3.6 shall be included, as applicable.

C.5.2.5.3.1 Security measures for electronic data **<secref>**. Instructions for handling, loading, purging, overwriting, or unloading classified electronic data under unusual conditions. These instructions shall be developed when the systems are classified or have non-volatile on-board memory that requires to be cleared prior to transportation or other action that allows the data to be accessed by unauthorized personnel. Instructions shall meet the requirements of current regulations as they pertain to automation security.

C.5.2.5.3.2 Unusual environment/weather **<unusualenv>**. Procedures shall be prepared for operation under conditions of extreme moist heat, extreme dry heat, extreme cold, salt air, sea spray, dust storms, sand storms, high altitudes, snow, mud, and other similar conditions. Ranges of environmental/weather operating conditions considered for the system addressed shall be defined.

C.5.2.5.3.3 Fording and swimming **<fording>**. If applicable, procedures for fording and swimming the equipment shall be provided.

Source: https://assist.dla.mil -- Downloaded: 2016-12-09T23:32Z
Check the source to verify that this is the current version before use.

C.5.2.5.3.4 Interim Nuclear, Biological, and Chemical (NBC) decontamination procedures **<decon>**. As applicable and specified by the acquiring activity, interim general NBC decontamination procedures to be performed until NBC decontamination facilities are available shall be prepared. Other decontamination TMs shall be referenced only when necessary.

C.5.2.5.3.5 Jamming and Electronic Countermeasures (ECM) procedures **<ecm>**. As applicable, procedures shall be prepared for operation of the equipment in an ECM environment through transmitted and reflected deception signals and through transmitted and reflected jamming.

C.5.2.5.3.6 Degraded operation procedures **<degraded>**. When operation of the equipment in a degraded condition is required, procedures shall be prepared for temporarily adapting the equipment and the operating procedures to meet the reduction of power, partial failure, failure of a portion of the equipment, or similar conditions.

C.5.2.6 Emergency work package **<emergencywp>**. As applicable, emergency procedures using, but not limited to, the operating and shutdown shall be prepared. Emergency work package shall be marked as specified in 4.7.22.4.

C.5.2.6.1 Work package identification information **<wpidinfo>**. Work package identification information is required for this work package (refer to 4.7.9.1).

C.5.2.6.2 Initial setup information **<wpinfo>**. Initial setup information is required for this work package (refer to 4.7.9.2).

C.5.2.6.3 Emergency operation **<emergency>**. Procedures covering operation of the equipment during emergency conditions (control failure, air failure, lube oil failure, loss of cooling water, etc.). Emergency operating instructions shall be included. Warning or caution to return the equipment to proper operation when the emergency is over shall also be included.

C.5.2.6.4 Emergency shutdown **<emergency>**. Procedures to turn the equipment off during an emergency (fire, water, smoke, hazard to personnel, loss of coolant, normal power, etc.).

C.5.2.7 Stowage and decal/data plate guide work package **<stowagewp>**. This work package shall be prepared as directed by the acquiring activity. The guide plan shall include information provided by the acquiring activity. The data described in C.5.2.7.1 through C.5.2.7.5 shall be included.

C.5.2.7.1 Work package identification information **<wpidinfo>**. Work package identification information is required for this work package (refer to 4.7.9.1).

C.5.2.7.2 Initial setup information **<wpinfo>**. Initial setup information is not required for this work package.

C.5.2.7.3 Introduction **<intro>**. A brief scope statement shall be prepared explaining the purpose of the work package.

C.5.2.7.4 Stowage guide **<stowinfo>**. Data on the location of applicable COEI, BII, and AAL items shall be prepared. An illustration shall be included to facilitate the location of the items.

C.5.2.7.5 Decal/data plate guide **<decalinfo>**. Data on the location of all decals and data plates shall be prepared. As applicable, illustrations detailing the locations of the decals and data plates shall be included.

Source: https://assist.dla.mil -- Downloaded: 2016-12-09T23:32Z
Check the source to verify that this is the current version before use.

C.5.2.8 On-vehicle equipment loading plan work package **<eqploadwp>**. This work package shall be prepared when applicable to the equipment. The loading plan shall include information provided by the acquiring activity. The data described in C.5.2.8.1 through C.5.2.8.4 shall be included.

C.5.2.8.1 Work package identification information **<wpidinfo>**. Work package identification information is required for this work package (refer to 4.7.9.1).

C.5.2.8.2 Initial setup information **<wpinfo>**. Initial setup information is not required for this work package.

C.5.2.8.3 Introduction **<intro>**. A brief scope statement shall be prepared explaining the purpose of the loading plan and identifying the equipment covered by the on-vehicle equipment loading plan work package.

C.5.2.8.4 Illustrated loading plan list(s) **<loaddesc>**. An illustration identifying and locating the on-vehicle equipment shall be included. External and internal views shall be used, if necessary. As applicable, both tactical and nontactical situation loading configurations shall be shown.

C.6 NOTES.

The notes in section 6 apply to this appendix.

Source: https://assist.dla.mil -- Downloaded: 2016-12-09T23:32Z
Check the source to verify that this is the current version before use.

OPERATOR MAINTENANCE

DESCRIPTION AND USE OF OPERATOR'S CONTROLS AND INDICATORS

INTRODUCTION

The following tables and illustrations provide the description and use of the controls and indicators pertaining to the instrument and auxiliary panels, center console, steering column, floor-mounted, door-mounted, seat, exterior, and M1079 van controls, and special purpose kit controls and indicators. Some switch locations on the auxiliary panel may be blank depending on the model of your vehicle.controls.

Table 1. Instrument Panel Controls and Indicators

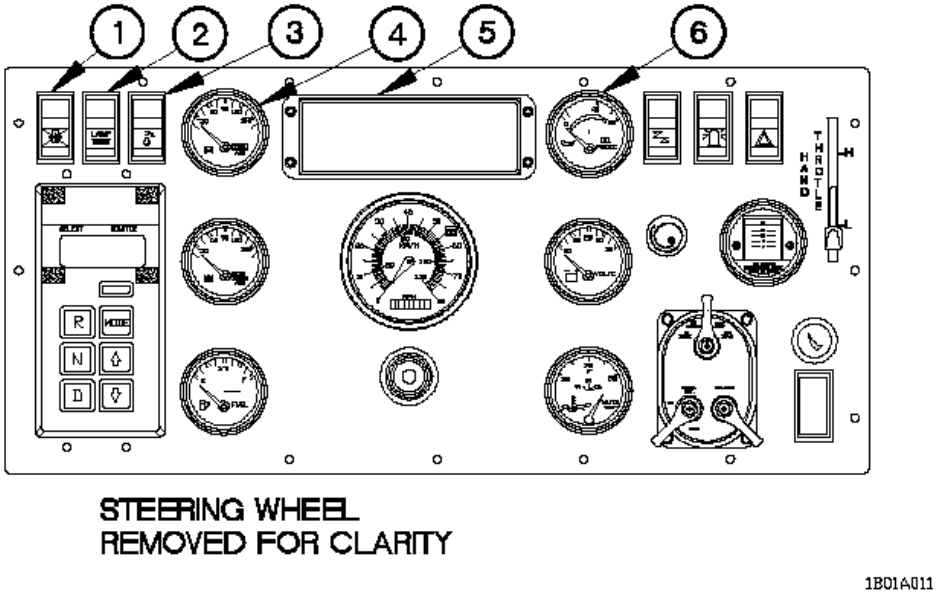

Figure 1. Instrument Panel Controls and Indicators

Key	Control/Indicator	Function
1.	Radiator Fan Off Switch.	When positioned to on, radiator fan off switch will illuminate to indicate the radiator fan is disabled. Radiator fan off switch will remain in the off position and not illuminated, unless otherwise directed.
2.	Lamp Test Switch.	Tests the lights on high engine temperature and TRANS OIL TEMP indicators on Lighted Indicator Display.
3.	Ether Start Switch.	Injects ether into engine intake system to assist with cold weather starting when switch is pressed.
4.	FRONT BRAKE AIR Pressure Gage.	Shows air pressure (in psi) available to operate front brakes. Normal air pressure range is 65-120 psi (448-827 kPa).
5.	Lighted Indicator Display.	Indicator lights to indicate operating characteristics of the vehicle. shows all indicators on the Lighted Indicator Display.

FIGURE C-1. Example of controls and indicators.

Source: https://assist.dla.mil -- Downloaded: 2016-12-09T23:32Z
Check the source to verify that this is the current version before use.

APPENDIX D

TROUBLESHOOTING PROCEDURES

D.1 SCOPE.

D.1.1 Scope. This appendix establishes the technical content requirements for the preparation of troubleshooting procedures for major weapon systems, and their related systems, subsystems, equipment, weapons replacement assemblies (WRAs), and shop replacement assemblies (SRAs). This Appendix is a mandatory part of this standard. The information contained herein is intended for compliance. The requirements are applicable for all maintenance levels through overhaul (depot) including Depot Maintenance Work Requirements (DMWRs) and National Maintenance Work Requirements (NMWRs).

D.2 APPLICABLE DOCUMENTS.

The applicable documents in section 2 apply to this appendix.

D.3 DEFINITIONS.

The definitions in section 3 apply to this appendix.

D.4 GENERAL REQUIREMENTS.

D.4.1 General. Troubleshooting procedures shall be prepared for weapon systems, major equipment, components, and applicable support and interface equipment. Troubleshooting procedures and supporting illustrations shall be prepared so that operator/crew and maintenance personnel can perform all required operator through depot level (overhaul) troubleshooting.

D.4.2 Development of troubleshooting instructions. Troubleshooting instructions shall cover all items comprising the weapon system/equipment, such as assemblies, subassemblies, components, wiring, junction boxes, and accessories. Troubleshooting procedures shall isolate faults to the part(s) authorized by the RPSTL for repair or replacement at the maintenance level addressed. Tasks shall be presented in the order in which they are performed. Approved Logistics Management Information (LMI), and service experience, performance data on similar equipment, other reliability, maintainability, and supportability (RMS) and operational availability (Ao) data available shall be used in the preparation of specific troubleshooting procedures. Troubleshooting procedures shall begin with testing, observed problems, a fault symptom or malfunction and shall diagnose to a single fault/failure. Troubleshooting shall refer to specific maintenance or repair tasks to correct the fault. Instructions, where applicable, shall flow from operator level through field and sustainment until the fault is isolated. Procedures shall include schematics and illustrations as needed (or shall reference to required schematics, etc.). Troubleshooting data shall be test and fault-isolation oriented. Troubleshooting instructions shall include detailed inspection and troubleshooting information. Instructions shall include or reference to functional descriptions of subsystems being diagnosed to aid the operator/technician. The method used for identifying system equipment test points, including the requirements and methods of determining defects through visual inspection, shall be explained.

Source: https://assist.dla.mil -- Downloaded: 2016-12-09T23:32Z
Check the source to verify that this is the current version before use.

D.4.3 Maintenance level applicability. Requirements contained in this standard are applicable to all maintenance levels unless specifically noted in bold and in parentheses (i.e., **Field**). The labeled requirements shall be applicable to all TMs containing that maintenance level. An explanation of all applicable Department of Army maintenance levels is provided in section 3.

D.4.4 Preparation of digital data for electronic delivery. Technical manual data prepared and delivered digitally in accordance with this standard shall be Extensible Markup Language (XML) tagged using the Document Type Definition (DTD) for Troubleshooting Procedures and the XML Stylesheet Language (XSL), or style sheets in accordance with MIL-STD-2361. Refer to 4.6 for information on obtaining or accessing this DTD and style sheets. XML tags used in the DTD are noted throughout the text of this standard in bracketed, bold characters (i.e., **<tswp>**) as a convenience for the TM author and to ensure that the tags are used correctly when developing a document instance.

D.4.5 Use of DTD/XSLs. The DTD referenced in this standard interpret the technical content and structure for the functional requirements contained in this standard and are mandatory for use. The XSLs referenced herein interpret the style and format. As specified by the contracting activity, XSLs, or style sheets may be used to produce final reproducible paper copy for all TMs prepared in accordance with this standard. For additional information on the DTD and specific XSL or style sheets, refer to MIL-STD-2361.

D.4.6 Content structure and format. The examples provided herein are an accurate representation of the content structure and format requirements contained in this appendix and shall be followed to permit the effective use of the DTD for Troubleshooting Procedures.

D.4.7 Style and format. This standard provides style and format requirements for the technical content requirements described in this appendix. These requirements are considered mandatory and are intended for compliance.

D.4.8 Work package development. Technical manual data developed in accordance with this appendix shall be divided into individual, stand alone units of information called work packages. A work package shall consist of descriptive, operational, maintenance, troubleshooting, support, or parts information for the weapon system or equipment.

D.4.9 Safety devices and interlocks. Information shall be prepared pertaining to the purpose and location of all safety devices and interlocks in conjunction with the pertinent procedures.

D.4.10 Electrostatic discharge (ESD) sensitive parts. If the equipment contains ESD sensitive parts, components, or circuits, cautions and ESD labels shall be incorporated into the applicable tasks and procedures to ensure ESD sensitive parts are not damaged or degraded during maintenance and operation. Refer to 4.7.20 for requirements on labeling with ESD. Actions which could damage ESD sensitive parts, but which are not directly related to handling or operation of ESD sensitive parts, shall not be annotated with the ESD acronym, but shall be preceded by a caution statement.

Source: https://assist.dla.mil -- Downloaded: 2016-12-09T23:32Z
Check the source to verify that this is the current version before use.

D.4.11 Nuclear hardness. If the weapon system/equipment has nuclear survivability requirements (for example, over pressure and burst, thermal radiation, electromagnetic pulse, or transient radiation effects on electronics), cautions and Hardness-Critical Processes (HCP) labels shall be incorporated into the applicable tasks and procedures to ensure the hardness of the equipment is not degraded during handling or operation. Refer to 4.7.19 for requirements on labeling with HCP. Actions which could degrade hardness, but which are not directly involved in establishing nuclear hardness, shall not be annotated with the acronym, but shall be preceded by a caution statement.

D.4.12 Selective application and tailoring. This standard contains some requirements that may not be applicable to the preparation of all technical manuals. Selective application and tailoring of requirements contained in this standard are the responsibility of the acquiring activity and shall be accomplished using Appendix A, Technical Manual Content Selection Matrixes. The applicability of some requirements is also designated by one of the following statements: unless specified otherwise by the acquiring activity; as/when specified by the acquiring activity; or when specified by the acquiring activity.

D.5 DETAILED REQUIREMENTS.

D.5.1 Testing and troubleshooting philosophy. Testing and troubleshooting data shall be developed to the extent required to maintain aircraft and other major weapon systems, equipment, components and support equipment at the authorized maintenance level in accordance with the Logistics Management Information (LMI), Maintenance Allocation Chart (MAC), or Maintenance Plan and the Source, Maintenance, and Recoverability (SMR) codes developed for the weapon system/equipment. Other factors to be considered in the development of troubleshooting procedures include, but are not limited to, the following:

a. Technical experience (target audience).
b. User environment.
c. System quick-turnaround requirements.
d. Test equipment requirements and availability.
e. Automated versus manual testing.
f. Replaceable component and part reliability.
g. Ease of testing.
h. Test access time.
i. Test time.

D.5.2 Information to be provided. Troubleshooting information shall be provided in combination with test procedures. This testing and troubleshooting information shall guide the technician, in as practical a manner as possible, to the system, subsystem, equipment, weapons replacement assembly (WRA), shop replacement assembly (SRA), or further to the replaceable part, interconnecting wire, or mechanical linkage which caused the malfunction or failure. All information required to perform the tests and evaluate probable malfunctions of the assembled systems or equipment shall be provided.

Source: https://assist.dla.mil -- Downloaded: 2016-12-09T23:32Z
Check the source to verify that this is the current version before use.

D.5.2.1 Methods of testing and troubleshooting. The number of interrelated systems, assemblies, subassemblies, and components, types of equipment, and maintenance plan shall be taken into consideration as to the type and depth of testing and troubleshooting instructions to be developed. Based on the complexity of the system or equipment, manual (non-automatic), semi-automatic or automatic testing and troubleshooting methods shall be used. Functional testing is usually performed using a test set or test console whereby technicians make end-to-end checks of the system or equipment to ensure it will perform the function it was intended to do.

D.5.2.1.1 Manual (nonautomatic) troubleshooting. Troubleshooting procedures using nonautomatic test equipment shall be established on a system test concept. To meet the objectives of reduced maintenance downtime and decreased fault detection time, malfunction symptoms shall be identified to specific points of entry into the testing/troubleshooting cycle. Every effort shall be employed to avoid repetition of the time consuming end-to-end test.

D.5.2.1.2 Semi-automatic or automatic testing and troubleshooting. Many high performance systems have been designed to accept the use of semi-automatic/automatic test equipment. These systems are designed and programmed for rapid electronic test in the interest of reducing maintenance downtime to fault isolate and repair.

D.5.2.1.3 Testing and troubleshooting using built-in-test equipment. Built-in-test (BIT) capabilities are designed to operate in various formats. One of these formats is built-in-test using diagnostic software; another is the incorporation of electronically controlled sensors within the systems to be tested. Testing procedures shall identify the software required for test performance.

D.5.2.1.4 Sensor derived failures. Sensors, installed at critical points shall be used to detect discrepancies in system operation.

D.5.2.1.5 Failure interpretation. Lookup tables for manually tested systems or software coding for semi-automatic and automatic systems shall be prepared so the maintenance technician may properly interpret these displays and isolate and correct malfunctions.

D.5.2.2 Types of testing and troubleshooting information. Testing and troubleshooting information includes fault reporting/fault isolation data and detailed testing and troubleshooting procedures for each weapon system equipment, systems, components and support equipment. When applicable, integrated system testing and troubleshooting for aircraft and major weapon systems shall also be included.

D.5.2.2.1 Fault reporting/fault isolation information. . Fault reporting information provides crew members or other operating personnel with a standardized means for reporting malfunctions and fault symptoms. Fault isolation information is designed for use in rapid isolation of faults revealed during an operational mission or when the aircraft/weapon system is in an operational configuration on the ground. This data shall instruct maintenance personnel as to what maintenance actions to perform and/or what procedures to use to correct reported faults. Fault reporting information and the fault isolation data are designed to be used together. Fault isolation information coverage shall be limited to faults identified in the fault reporting data, which require specific procedures to isolate the cause. Fault reporting data shall reference the fault isolation data to the maximum extent practical for isolation of indicated malfunctions.

Source: https://assist.dla.mil -- Downloaded: 2016-12-09T23:32Z
Check the source to verify that this is the current version before use.

D.5.2.2.2 Integrated system testing and troubleshooting. When several systems are dependent upon each other for proper operation, the interdependent systems, as a unit, are identified as an integrated system. The testing of an integrated system is a checkout of the interdependent systems and shall reflect the assumption that the technician performing the check is qualified and is familiar with its systems and subsystems. Development and content of testing and troubleshooting for integrated systems shall be determined based on the systems having self-test or built-in test capabilities or requiring the use of a system peculiar test set or common test equipment. These compound applications require more specifics on the criteria of which components or signals are tested by which method. In addition to coverage of the integrated system, the associated systems making up the integrated system shall be covered separately.

D.5.2.2.2.1 Integrated systems having self-test or built-in test capability. Testing and troubleshooting procedures shall include what components or functions are tested, and what inputs are required for proper testing (power parameters, signals, motion, air, hydraulic, etc.). If wiring tests are included they should have defined testing parameters (which wires are tested, resistance tolerances, open definitions, wire-to-wire and wire-to-ground resistances, and any peculiar wire criteria) and what fault verification is required for a failure indication.

D.5.2.2.2.2 Integrated systems requiring the use of system peculiar test sets. Testing and troubleshooting procedures shall include identical parameters as those in D.5.2.2.2.1 with the additional requirement for special cables or support equipment that may be required.

D.5.2.2.2.3 Integrated systems requiring the use of common test equipment. Testing and troubleshooting procedures shall focus on actual readings or signal requirements so sources of common test equipment will not be restricted.

D.5.3 Troubleshooting procedures content. The procedures shall contain all essential and pertinent information that would be included in any other form of maintenance procedure. This includes warnings, cautions, notes, power turn-on procedures, precheckout procedures, reference diagrams, and initial switch settings. In addition to external causes for malfunctions, troubleshooting should also identify symptoms resulting from failure of every spare and repair part authorized for replacement at user level. Troubleshooting procedures shall be prepared assuming one malfunction at a time is being corrected. The operator/technician shall be instructed to perform any applicable self-tests, alignments, and inspections before beginning any other troubleshooting procedures. As applicable, an operational check shall be specified to be performed after the fault is corrected to ensure correct operation of the system. Troubleshooting procedural instructions shall be prepared following these general requirements.

a. A concise explanation of the testing and troubleshooting format and an explanation on how to use the testing and troubleshooting procedures with the malfunction/symptom index, when applicable.
b. The location for each component, accessory, connector, or junction box in the system under test shall be provided or a reference to the equipment description and data work package shall be included. The text shall also identify every test connector or other test point to be used in the test.

Source: https://assist.dla.mil -- Downloaded: 2016-12-09T23:32Z
Check the source to verify that this is the current version before use.

c. A complete list of test options shall be stipulated by the troubleshooting procedure. List any self-tests that are associated with the system. Self-test schemes shall be described as the prime troubleshooting tool, with manual troubleshooting prepared to supplement the instructions where the self-test leaves off or fails to locate the malfunction. Build the procedure using system self-tests before using external test equipment.

d. Test setup procedures and post-test teardown procedures.

e. Complete step-by-step and troubleshooting procedures, including instructions required for use and application of installed on-line testing equipment. Procedures shall take into account controls, test point accessibility, indicator displays, and the feasibility of using BITE or automated test equipment where available.

f. Test procedures (e.g., system turn on, identification of time required to run and complete the system test, and an indication of any possible mid-test interruptions or stoppages and how to respond to them).

g. Backup diagrams showing all test points, input and output signals, logic charts, schematics, signal flow diagrams, tables, and other illustrations as required for comprehensible understanding of the procedures.

h. Include any information that will aid the operator/technician, such as waveforms; resistance data; fluid pressures; voltage levels; references to test diagrams, functional diagrams, text, etc.; and alignment procedures, checkout procedures, or other scheduled maintenance procedures. Connector numbers, pin designations, etc., shall be identified.

i. Special attention shall be given to interface wiring fault isolation procedures. Wiring fault isolation procedures shall include the following types of data, as applicable:

   (1) Specific wire reading access points and resistances for wiring components (where practical).

   (2) Wire-to-wire and wire-to-ground criteria for circuit integrity.

   (3) Special wire definition where required (including interconnecting criteria for proper sealing or terminal application), and special notations where wire harnesses should be completely replaced and not repaired.

   (4) It is also essential when developing fault isolation procedures, to provide or refer to ground stud tables, which include type, location, and wires connected, charts for both connectors and terminal boards, and a wire number log to identify any wire to its prime wiring diagram.

D.5.4 Types of testing and troubleshooting. Depending on the type and complexity of the weapon system/equipment, the TM may contain the following testing and troubleshooting categories.

D.5.4.1 Aviation testing and troubleshooting category **(Aircraft Troubleshooting TMs only) <troubleaviationcategory>**. When developing Aircraft Troubleshooting TMs the following work packages shall be developed, as applicable.

a. Introduction work package **<tsintrowp>**.

b. Technical description work package **<techdescwp>**.

c. Troubleshooting index work package **<tsindxwp>.**

Source: https://assist.dla.mil -- Downloaded: 2016-12-09T23:32Z
Check the source to verify that this is the current version before use.

d. Operational checkout work packages **<opcheckwp>**.

e. Troubleshooting work packages **<tswp>**.

f. Combined operational checkout and troubleshooting work package **<opcheck-tswp>**.

D.5.4.2 Standard testing and troubleshooting category **<troublecategory>**. When developing TMs with maintenance level below depot the following work packages shall be developed, as applicable.

a. Troubleshooting index work package **<tsindxwp>.**

b. Operational checkout work packages **<opcheckwp>**.

c. Troubleshooting work packages **<tswp>**.

d. Combined operational checkout and troubleshooting work package **<opcheck-tswp>**.

D.5.4.3 DMWR/NMWR testing and troubleshooting category **(depot only) <troubledmwrnmwrcategory>**. When developing DMWR or NMWR the following work packages shall be developed, as applicable.

a. Troubleshooting index work package **<tsindxwp>.**

b. Preshop analysis work package **<pshopanalwp>**.

c. Component checklist work package **<compchklistwp>**.

d. Operational checkout work packages **<opcheckwp>**.

e. Troubleshooting work packages **<tswp>**.

f. Combined operational checkout and troubleshooting work package **<opcheck-tswp>**.

D.5.4.4 Master index testing and troubleshooting category **<masterindexcategory>**. When developing TM with a master troubleshooting index chapter the Troubleshooting index work package **<tsindxwp>** shall be developed.

D.5.5 Testing and troubleshooting work packages. Testing and troubleshooting work packages shall be developed for the overall weapon system/equipment and each maintainable system, subsystem, and WRA/SRA for each applicable maintenance level as indicated in the approved MAC or maintenance plan.

D.5.5.1 Work package content. Work packages shall include WP identification information, initial setup information, and all required testing and troubleshooting information. When initial setup information differs for specific testing and troubleshooting procedures, additional work packages shall be developed. Work packages shall stand-alone and contain complete start-to-finish troubleshooting procedures. Any follow-on maintenance that must be performed after troubleshooting is completed shall be included (e.g., disconnect external power, perform operational checks, etc.). When the follow-on maintenance is extensive and is contained in a separate work package, a reference shall be made to the applicable work package. The words "**END OF WORK PACKAGE**" shall be placed below the last data item (i.e., text, illustration, etc.) of the work package.

D.5.5.2 Types of testing and troubleshooting work packages. The following types of testing and troubleshooting work packages shall be developed, as applicable. Refer to FIGURE D-1 through FIGURE D-8 and MIL-HDBK-1222 for typical examples of testing and troubleshooting work packages.

Source: https://assist.dla.mil -- Downloaded: 2016-12-09T23:32Z
Check the source to verify that this is the current version before use.

D.5.5.3 Introduction work package **(Aircraft Troubleshooting TMs only) <tsintrowp>**. This work package shall describe the testing and troubleshooting process used to perform troubleshooting and shall include information on the methods used to perform troubleshooting. The general flow of the troubleshooting process shall be described and the general methods used to perform testing and troubleshooting shall be included. Any information peculiar to troubleshooting electrical subsystems and electronic equipment shall also be described. If a troubleshooting index <**tsindxwp**> is used, an explanation of the index shall be provided.

D.5.5.3.1 Work package identification information **<wpidinfo>**. Work package identification information is required for this work package (refer to 4.7.9.1).

D.5.5.3.2 Initial setup information **<wpinfo>**. Initial setup information is not required for this work package.

D.5.5.4 Technical description work packages **<techdescwp> (Aircraft Troubleshooting Manuals only)**. A technical description work package may be developed for each system and subsystem of the weapon system, as applicable. The work package shall, as applicable, include the following information in D.5.5.4.1 through D.5.5.4.5.

D.5.5.4.1 Work package identification information **<wpidinfo>**. Work package identification information is required for this work package (refer to 4.7.9.1).

D.5.5.4.2 Initial setup information **<wpinfo>**. Initial setup information is not required for this work package.

D.5.5.4.3 Equipment description and data **<descproc>**. When equipment description and data is required to support the testing and troubleshooting procedures it shall be prepared in accordance with the requirements provided in B.5.3.3 through B.5.3.6 Equipment Description, as applicable. If this information is provided in another TM, a reference to the TM may be included in lieu of including the descriptive data.

D.5.5.4.4 Controls and indicators **<ctrlindproc>**. When it is necessary to provide information concerning the description and use of the controls and indicators to support the testing and troubleshooting procedures, it shall be prepared in accordance with the requirements provided in C.5.2.3.3 or C.5.2.3.4 Control and Indicator Description, as applicable. If this information is provided in another TM, a reference to the TM may be included in lieu of including the controls and indicator data.

D.5.5.4.5 Theory of operation **<thryproc>**. When theory of operation is required to support the troubleshooting procedures, it shall be prepared in accordance with the requirements provided in B.5.4.3 Theory of Operation, as applicable. If this information is provided in another TM, a reference to the TM may be included in lieu of including the theory data.

D.5.5.5 Troubleshooting index work package **<tsindxwp>**. This work package shall be prepared as directed by acquiring activity and consist of either a malfunction/symptom index **<tsindx.symptom>/<tsindx.messageword>** or a system/subsystem index **<tsindx.system>**.

D.5.5.5.1 Work package identification information **<wpidinfo>**. Work package identification information is required for this work package (refer to 4.7.9.1).

Source: https://assist.dla.mil -- Downloaded: 2016-12-09T23:32Z
Check the source to verify that this is the current version before use.

D.5.5.5.2 Initial setup information **<wpinfo>**. Initial setup information is not required for this work package.

D.5.5.5.3 Malfunction/symptom index **<tsindx.symptom>**/**<tsindx.messageword>**. When all probable faults have been determined and described, prepare a malfunction/symptom index work package using the exact description of the fault or symptom as was used in the troubleshooting procedures. Group symptoms to common system areas both in the malfunction/symptom index and in the troubleshooting procedures. For example, if a system has a data link, communications, radar, display, and tracking systems, the symptoms would be grouped into each related area. All fault symptoms of a communications nature would fall into the communications group. The symptoms may be further divided into functions within the communications group that would be common. The same would be done for radar, data link, display, and tracking systems. This index shall include the following data.

a. List all fault symptoms or known malfunctions in alphabetical order by malfunction/ symptom **<malfunc>** or by built-in test code/fault message word **<messageword>** and reference this information to the applicable testing and troubleshooting WP sequence number **<xref>**/**<link>**/**<extref>** or the required corrective action **<action>**.
b. For complex systems, list symptoms by subsystem categories **<tsindx.symptom-category>**/**<tsindx.messagewor-category>**, if necessary, and use codes that help identify specific items. Subsystem categories shall be listed in alphabetical order or by code.
c. Catalog malfunctions/symptoms by method of detection, if this aids usability.
d. Fault symptom descriptions (titles) shall be standardized between malfunction/symptom index work packages and troubleshooting procedures work packages.

D.5.5.5.4 Master malfunction/symptom index **<tsindx.symptom>**. When applicable, one troubleshooting malfunction/symptom index work package (refer D.5.4.4) shall be prepared for all troubleshooting for the system/equipment. A chapter title page shall be prepared and titled "Master Malfunction/Symptom Index" preceded by the maintenance level (e.g., Field Maintenance).

D.5.5.5.5 System/subsystem index **<tsindx.system>**. This index shall consist of a list of specific systems, subsystems, assemblies and components requiring troubleshooting, referenced to the applicable testing and troubleshooting WP sequence number **<xref>**/**<link>**/**<extref>** or required corrective action.

D.5.5.6 Preshop analysis work package **(DMWR/NMWR only) <pshopanalwp>**. Preshop analysis shall apply when data indicates that an inspection or test is more effective in determining useful life of a system, subsystem, or component than a mandatory disassembly. Preshop analysis shall be prepared in accordance with D.5.5.6.1 through D.5.5.6.5.

D.5.5.6.1 Work package identification information **<wpidinfo>**. Work package identification information is required for this work package (refer to 4.7.9.1).

D.5.5.6.2 Initial setup information **<wpinfo>**. Initial setup information is required for this work package (refer to 4.7.9.2).

D.5.5.6.3 Scope **<scope>**. The purpose and coverage of the preshop analysis shall be stated.

Source: https://assist.dla.mil -- Downloaded: 2016-12-09T23:32Z
Check the source to verify that this is the current version before use.

D.5.5.6.4 Preparation Procedures <**proc**>.

a. Unpacking and special handling. Procedures shall be prepared for removing the item, assemblies, subassemblies, or components from the shipping containers and packaging material. Instructions shall be prepared on any needed handling requirements for hazardous material, electrostatic sensitive devices, precious metal content, classified material, or critical material. Instructions shall also be prepared for any special condemnation procedures for the item and its assemblies and subassemblies.

b. Checking attached documents. Instructions shall be prepared for checking all tags, forms, and documents attached to the item to determine the reason for its return and to identify any other obvious faults or damage.

c. External inspection. Procedures shall be prepared for external inspection of the item to determine if it is complete and if there is any obvious external damage.

d. Cleaning and preservation. Instructions shall be prepared for cleaning the item to prepare it for preshop analysis testing. They shall include the procedures for any temporary preservation or corrosion protection measures needed to protect the item until the work required is started.

D.5.5.6.5 Preshop analysis procedures <**pshopanal**>. Detailed procedures shall be prepared for performing a preshop analysis. The acquiring activity shall determine if the preshop analysis procedures shall be a narrative or be structured as a checklist. A checklist permits the inclusion of the name and signature of the person performing the analysis and any remarks that are required based on the results of the analysis.

a. Narrative procedures <**proc**>. Preshop analysis text shall be presented in procedural format. Test and analysis procedures shall be presented in a logical sequence not to cause any unnecessary disassembly and in the order in which they should be done. Each procedure shall be identified by a step number. Procedures shall be arranged in groups by major components, assemblies, and subassemblies. Each group shall be headed with an applicable title.

b. Checklist <**chklist**>. The checklist shall include the following data.

(1) Cover sheet/frame <**coverpage**>. The cover sheet/frame (refer to FIGURE D-1) shall contain an area to record the following item information: part number <**partno**>; serial number <**serialno**>; NSN <**nsn**>, modifications required <**modreq**>; reason for overhaul or repair <**reason**>; unpacking of secondary items required <**secitem**>; review of tags <**revtag**> or forms <**revform**> with the item, name <**name**> and signature <**sig**> of person doing the analysis; and date <**date**>.

(2) Introduction <**intro**>. When necessary, the table of tests and inspections shall be preceded by a brief explanation of its use.

(3) Table of tests and inspections <**pshopckk.tab**>. This table shall have an entry for each test and inspection procedure. Each entry shall have, as a minimum, the following information: inspection point (the item or area to be inspected), condition, action, remarks, and identification of the personnel performing the inspection (refer to FIGURE D-2). If the procedure is too complex or lengthy to be included in the checklist, a reference to the WP where the procedures or actions are provided shall be included in the checklist.

Source: https://assist.dla.mil -- Downloaded: 2016-12-09T23:32Z
Check the source to verify that this is the current version before use.

D.5.5.7 Component checklist work package **(DMWR/NMWR only) <compchklistwp>**. A component checklist work package shall be prepared when required to support the preshop analysis procedures. This work package shall consist of the data described in D.5.5.7.1 through D.5.5.7.4.

D.5.5.7.1 Work package identification information **<wpidinfo>**. Work package identification information is required for this work package (refer to 4.7.9.1).

D.5.5.7.2 Initial setup information **<wpinfo>**. Initial setup information is required for this work package (refer to 4.7.9.2).

D.5.5.7.3 Introduction **<intro>**. When necessary, the checklist shall be preceded by a brief explanation of its use.

D.5.5.7.4 Component checklist **<compchklist>**. The checklist (refer to FIGURE D-3) shall contain the following data, as applicable.

a. Name/nomenclature of the equipment/item **<name>**.
b. Serial number **<serialno>**.
c. Date received **<daterec>**.
d. Received from (identify unit) **<recfrom>**.
e. Component name **<compname>**.
f. NSN **<nsn>**.
g. Part number/CAGEC **<partno>/<cageno>**.
h. Quantity required **<qty>**.
i. Quantity received **<qtyrec>**.
j. Visual damage found **<damage>**.

D.5.5.8 Operational checkout and troubleshooting procedures work packages. A series of work packages shall be developed containing operational checkout and troubleshooting procedures for integrated weapon systems and for each independent system and subsystem of the weapon system, as applicable. DMWR/NMWR shall include these work packages as required by the acquiring activity. The content and development requirements for these work packages are provided in D.5.5.8.1 through D.5.5.8.6.

D.5.5.8.1 Operational checkout and troubleshooting procedures content. Operational checkout and troubleshooting procedures shall guide a technician in as practical a manner as possible in detecting, isolating, and correcting system or equipment failure/malfunctions. Procedures shall ultimately lead to isolating faults to an appropriate adjustment, replaceable parts, interface wires, or mechanical linkage. Instructions shall direct repair or replacement of parts authorized for repair or replacement at the maintenance level covered. Procedures shall be accompanied by schematics, signal flow diagrams, waveforms, tables, and other illustrations for comprehensive understanding of the procedures. When schematics are required as backup data, they shall be referenced or may be contained in the same WP. The schematics shall integrate fluid, mechanical, electrical, and electronic components. Illustrations may also be included that locate and identify the controls and displays used to perform the testing and troubleshooting procedures. If ATE is used and a Test Program Set has been developed, the operational checkout and troubleshooting procedures contained in the Test Program Set shall not be duplicated. A reference to the Test Program Set shall be provided.

Source: https://assist.dla.mil -- Downloaded: 2016-12-09T23:32Z
Check the source to verify that this is the current version before use.

D.5.5.8.2 Operational checkout and troubleshooting procedure work package development. Operational checkout and troubleshooting procedures shall be combined and contained in the same WP. Based on the following factors, operational checkout and troubleshooting procedures may be combined into a single work package or may be developed in a separate operational checkout and a separate troubleshooting work package (refer to D.5.5.8.5).

a. Complexity of the system/equipment.
b. The type of test equipment used.
c. System/equipment self-test or BIT capability.
d. Complexity of the test and troubleshooting procedures as determined by the task analysis.
e. Clarity and usability.

D.5.5.8.3 Operational checkout work package **<opcheckwp>**. Operational checkout procedures that subject an aircraft, or other type of major weapon system or their systems, subsystems, components, accessories, and items of equipment to prescribed conditions to determine that they will function in accordance with predetermined test parameters shall be developed. Operational checkout for DMWRs/NMWRs shall be developed as specified by acquiring activity. An operational checkout work package may include test set hookup and disconnect procedures, index of test set message words, a reference index of test set or BIT/BITE fault codes and related actions, and further testing procedures related to the message words and fault codes. The words "**END OF WORK PACKAGE**" shall be placed below the last item (i.e., text, illustration, etc.) in any work package containing the operational checkout procedures. The information in D.5.5.8.3.1 through D.5.5.8.3.7 shall be included in the work package, as applicable.

D.5.5.8.3.1 Work package identification information **<wpidinfo>**. Work package identification information is required for this work package (refer to 4.7.9.1).

D.5.5.8.3.2 Initial setup information **<wpinfo>**. Initial setup information is required for this work package (refer to 4.7.9.2).

D.5.5.8.3.3 Introduction **<intro>**. When required, an introduction shall be included explaining how the operational checkout procedures are to be used to perform testing and how they relate to the associated troubleshooting work packages.

D.5.5.8.3.4 General procedures and precautions **<proc>**. Any general procedures that must be performed prior to checkout and precautions that must be taken during the performance of the checkout procedure shall be included.

D.5.5.8.3.5 Pretest setup procedures **<hookup>**. Procedures for connecting any test and accessory equipment, including cable connections shall be included. Procedures for the initial setting of controls shall also be provided.

D.5.5.8.3.6 Operational checkout procedures **<opcheckproc>**. The selection of an operational checkout type shall be based on the type of system, equipment, or assembly/subassembly being addressed, the target audience, and the maintenance level of the operator/technician. Based on the complexity of the operational checkout to be performed, operational checkout procedures can be structured differently and therefore contain different content elements. The following methods shall be used to prepare operational checkout procedures. Once selected, the operational checkout method shall be prepared in accordance with the requirements outlined below.

Source: https://assist.dla.mil -- Downloaded: 2016-12-09T23:32Z
Check the source to verify that this is the current version before use.

a. Operational checkout test procedure **<opcheck>**. Operational checkout procedures <**testproc**> shall consist of a series of numbered steps and substeps **<step1>**, which lead to an indication or condition **<indication>**. Based on the indications or conditions, a corrective action **<action>** is provided (refer to FIGURE D-4). This corrective action can either be stated as a specific remedy or can be a reference **<xref>/<link>** to a detailed troubleshooting procedure work package. This process is continued until the complete operational checkout procedure is completed.

b. Test set message word index **<messageindx>**. The message word index shall consist of a series of test set messages or bit-code words with message word description. Based on the message or bit-code word, a corrective shall be stated. This corrective action can either be stated as a specific remedy or can be a reference **<xref>/<link>** to a detailed troubleshooting procedure work package.

c. Fault code reference index **<faultreports>**. The fault code reference index shall consist of fault code(s) that leads to a corrective action. This corrective action can either be stated as a specific remedy or can be a reference **<xref>/<link>** to a maintenance work package. If applicable, additional follow-on operational testing procedures **<follow-on>** shall be included based on the corrective action.

D.5.5.8.3.7 Post-operational shutdown procedures **<disconnect>**. Procedures to return the aircraft, aircraft system, or equipment to its normal configuration, prior to operational checkout setup, if required, shall be included. Any follow-on maintenance shall also be included.

D.5.5.8.4 Troubleshooting work package **<tswp>**. Troubleshooting procedures for detecting, isolating, and correcting aircraft, aircraft systems or other types of weapon system, and their subsystems, and equipment failures and malfunctions shall be developed. Troubleshooting for DMWRs/NMWRs shall be developed as specified by acquiring activity. Work packages will relate either to a specific symptom or to a system, assembly, or component. Work packages related to a system of some complexity may contain more than one set of troubleshooting procedures directed to specific subsystems. The information in D.5.5.8.4.1 through D.5.5.8.4.7 shall be included in the work package, as applicable.

D.5.5.8.4.1 Work package identification information **<wpidinfo>**. Work package identification information is required for this work package (refer to 4.7.9.1).

D.5.5.8.4.2 Initial setup information **<wpinfo>**. Initial setup information is required for this work package (refer to 4.7.9.2).

D.5.5.8.4.3 Introduction **<intro>**. When required, an introduction shall be included explaining how the troubleshooting procedures are to be used to perform troubleshooting and how they relate to the associated operational checkout work packages.

D.5.5.8.4.4 General procedures and precautions **<proc>**. Any general procedures that must be performed prior to troubleshooting and precautions that must be taken during the performance of the troubleshooting procedure shall be included.

D.5.5.8.4.5 Pretest setup procedures **<hookup>**. Procedures for connecting any test and accessory equipment, including cable connections shall be included. Procedures for the initial setting of controls shall also be provided.

Source: https://assist.dla.mil -- Downloaded: 2016-12-09T23:32Z
Check the source to verify that this is the current version before use.

D.5.5.8.4.6 Troubleshooting procedures **<tsproc>**. The selection of a troubleshooting type shall be based on the type of system, equipment, or assembly/subassembly being addressed, the target audience description, and the maintenance level of the operator/technician. Based on the complexity of the troubleshooting to be performed, troubleshooting procedures can be structured differently and therefore contain different content elements. The following methods shall be used to prepare troubleshooting procedures. Once selected, the troubleshooting method shall be prepared in accordance with the requirements specified by this document. Refer to MIL-HDBK-1222 for example of troubleshooting procedure.

a. Method A - Text-Logic **<logicproc>**. Troubleshooting procedures for specific fault symptoms shall combine text and logic and consist of a series of steps and substeps **<test>** which lead to an indication or condition **<indication>** (usually stated in the form of a question). Based on these indications or conditions, a "YES" or "NO" response **<answer>** is provided that will guide the technician to either the next step or a series of steps **<test>**, or to a malfunction **<malfunc>** and corrective action **<action>** (refer to FIGURE D-5). This process is continued until the entire troubleshooting procedure is completed. When required, the corrective action may include a reference to the work package or paragraph **<xref>/<link>** that contains the data to perform the corrective action. Functional Flow Tree Troubleshooting Procedures. Graphical functional flow tree troubleshooting is shown in MIL-HDBK-1222.

b. Method B - Text **<faultproc>**. Troubleshooting procedures shall consist of an all inclusive series of specific fault symptoms for the system/equipment being troubleshot. For each fault symptom **<symptom>**, the probable malfunction or series of malfunctions **<malfunc>** that may have caused the fault shall be listed. For each probable malfunction identified, a corrective action **<action>** shall be stated with a reference to the work package or paragraph **<xref>/<link>** that contains the data to perform the corrective action (refer to FIGURE D-6).

c. Method C - Multiplex read codes **<muxproc>**. This method of troubleshooting is based on the use of computer generated multiplex (MUX) read code data. The MUX read code data are listed in troubleshooting sequence order by signal name.

   (1) Signal data. For each signal name **<signame>** the following MUX read code data shall be provided (refer to FIGURE D-7).

      (a) Memory location <**memloc**>.

      (b) Memory data bit(s) <**memdata**>.

      (c) Condition <**condition**>.

      (d) Signal function <**sigfunc**>.

      (e) Remarks <**remarks**>.

      (f) Pass <**criteria**>.

      (g) Fail <**criteria**>.

   (2) The MUX read code data. The MUX read code data is used in conjunction with a malfunction/symptom index (refer to D.5.5.4) and an operational checkout procedure (refer to D.5.5.8.3.6.). For each system or equipment, the MUX read code data shall be listed under the system or equipment name by the specific malfunction/symptom.

Source: https://assist.dla.mil -- Downloaded: 2016-12-09T23:32Z
Check the source to verify that this is the current version before use.

D.5.5.8.4.7 Post-operational shutdown procedures **<disconnect>**. Procedures to return the aircraft, aircraft system, or equipment to its normal configuration, prior to troubleshooting setup, if required, shall be included. Any follow-on maintenance shall also be included.

D.5.5.8.5 Combined operational checkout and troubleshooting work package **<opcheck-tswp>**. Combined operational checkout and troubleshooting procedures to verify proper operation to prescribed standards and for detecting, isolating, and correcting system and equipment failures and malfunctions shall be developed. Combined operational checkout and troubleshooting for DMWRs/NMWRs shall be developed as specified by acquiring activity. The following information in D.5.5.8.5.1 through D.5.5.8.5.7 shall be included, as applicable.

D.5.5.8.5.1 Work package identification information **<wpidinfo>**. Work package identification information is required for this work package (refer to 4.7.9.1).

D.5.5.8.5.2 Initial setup information **<wpinfo>**. Initial setup information is required for this work package (refer to 4.7.9.2).

D.5.5.8.5.3 Introduction **<intro>**. When required, an introduction shall be included explaining how the operational checkout and troubleshooting procedures are to be used to perform checkout and troubleshooting and how they relate to the associated maintenance work packages that include the corrective actions that will return the equipment to proper operation.

D.5.5.8.5.4 General procedures and precautions **<proc>**. Any general procedures that must be performed prior to checkout and precautions that must be taken during the performance of the checkout procedure shall be included.

D.5.5.8.5.5 Pretest setup procedures **<hookup>**. Procedures for connecting any test and accessory equipment, including cable connections shall be included. Procedures for the initial setting of controls shall also be provided.

D.5.5.8.5.6 Operational checkout and troubleshooting procedures. Operational checkout and troubleshooting procedures may be combined in a single procedure or may be prepared as a separate operational checkout procedure and a separate troubleshooting procedure.

a. Combined operational checkout and troubleshooting procedures **<opcheck-tsproc>**. Combined operational checkout and troubleshooting procedures shall consist of a series of test procedures **<testproc>** (steps and substeps), which lead to an indication or condition **<indication>**. When a normal indication is obtained, the operational checkout continues until the complete checkout is completed or until an abnormal condition or indication is observed. When the test procedure results in an abnormal indication or condition, a malfunction **<malfunc>** or a series of malfunctions is provided. For each malfunction, the possible corrective actions **<action>** shall be provided (refer to FIGURE D-8). When required, the corrective action may include a reference to the work package or paragraph **<xref>/<link>** that contains the data to perform the corrective action.
b. Separate operational checkout procedures **<opcheckproc>**. When it is determined that the operational checkout procedures shall be separate from the troubleshooting procedures, the operational checkout procedures shall be included under the heading "OPERATIONAL CHECKOUT". Operational checkout procedures shall be developed in accordance with D.5.5.8.3.6.

Source: https://assist.dla.mil -- Downloaded: 2016-12-09T23:32Z
Check the source to verify that this is the current version before use.

c. Separate troubleshooting procedure **<tsproc>**. When it is determined that the troubleshooting procedures shall be separate from the operational checkout procedures, the troubleshooting procedures shall be included under the heading "TROUBLESHOOTING". Troubleshooting procedures shall be developed in accordance with D.5.5.8.4.6.

D.5.5.8.5.7 Post-operational shutdown procedures **<disconnect>**. Procedures to return the aircraft, aircraft system, or equipment to its normal configuration, prior to operational checkout or troubleshooting setup, if required, shall be included. Any follow-on maintenance shall also be included.

D.5.5.8.6 Integrated system troubleshooting procedures work packages. When specified by the acquiring activity, integrated system operational checkout and troubleshooting (refer to D.5.2.2.2) shall be developed. Troubleshooting procedures which involve more than one system or more than one major subsystem and which cannot be logically placed in one of the individual system/ subsystem troubleshooting information work packages shall be covered in this type of work package. The content and structure of this work package shall be as described in D.5.5.8.3 and D.5.5.8.4 or D.5.5.8.5.

D.6 NOTES.

The notes in section 6 apply to this appendix.

Source: https://assist.dla.mil -- Downloaded: 2016-12-09T23:32Z
Check the source to verify that this is the current version before use.

TM X-XXX-XXXX-XX 0079

PRESHOP ANALYSIS FOR P/N _____

Serial No. _____

NSN _____

MWOs Required _____

Reason(s) for Overhaul/Repair _____

_____

_____

_____

Unpacking Secondary Items Required? _____

Reviewed Tags? _____

Reviewed Forms? _____

Name (please print) _____

Signature _____ Date _____

0079-2

FIGURE D-1. Example of a cover sheet for preshop analysis checklist.

Source: https://assist.dla.mil -- Downloaded: 2016-12-09T23:32Z
Check the source to verify that this is the current version before use.

TM NUMBER **0085**

Table 1. Preshop Analysis Checklist

Inspection Point	Condition	Action	Remarks	Date Checked	Checked by
(1) Pump Housing	Inspect for obvious damage, signs of leakage, overheating, and overall condition	External Visual Inspection			
(2) Equipment Data Plate and Pump Markings	Inspect for legibility, unwanted paint, and general condition.	External Visual Inspection			
(3) Pressure Regulating Valve (TYPE I)	Inspect for damage to threads and mounting surfaces.	External Visual Inspection			
(4) Check Valve (TYPE II)	Inspect for damage to threads and mounting surfaces.	External Visual Inspection			
(5) Check Valve (TYPE III)	Inspect for damage to threads and mounting surfaces.	External Visual Inspection			
(6) Pressure Relief Valve (TYPE IV)	Inspect for damage to threads and mounting surfaces.	External Visual Inspection			
(7) Check Valve (TYPE V)	Inspect for damage to threads and mounting surfaces.	External Visual Inspection			
(8) Filter Bypass Valve (TYPE VI)	Inspect for damage to threads and mounting surfaces.	External Visual Inspection			
(9) Programming Valve (TYPE VII)	Inspect for damage to threads and mounting surfaces.	External Visual Inspection			
(10) Filter Bypass Valve (TYPE VIII)	Inspect for damage to threads and mounting surfaces.	External Visual Inspection			
(11) Temperature Sensor (TYPE IX)	Check sensor and electrical connector for damage.	External Visual Inspection			
(12) Oil Pressure Sensor (TYPE X)	Check sensor and electrical connector for damage.	External Visual Inspection			
(13) Magnetic Particle Detector Assembly (TYPE XI)	Inspect for damage to threads and mounting surfaces. Check that assembly is magnetized.	External Visual Inspection			

FIGURE D-2. Example of a preshop analysis checklist.

Source: https://assist.dla.mil -- Downloaded: 2016-12-09T23:32Z
Check the source to verify that this is the current version before use.

DEPOT MAINTENANCE

COMPONENT CHECKLIST

INITIAL SETUP:

NOT APPLICABLE

SCOPE

This work package includes a list which is to be copied for each item received for a preshop analysis. After copying one list for each item, the information required must be completed on the checklist prior to the preshop analysis.

COMPONENT CHECKLIST

Name/nomenclature of the equipment/item _____

Serial number _____

Date received _____

Received from (identify unit) _____

Component name _____

NSN _____

Part number _____

Quantity required _____

Quantity received _____

Visual damage found _____

END OF WORK PACKAGE

FIGURE D-3. Example of a component checklist.

Source: https://assist.dla.mil -- Downloaded: 2016-12-09T23:32Z
Check the source to verify that this is the current version before use.

TM X-XXXX-XXX-XX **0145**

FIELD MAINTENANCE
ARRESTING GEAR SYSTEM OPERATIONAL CHECKOUT

INITIAL SETUIP:

Personnel required	**Equipment Condition**
Maintainer (2)	Door 103 is installed (WP 0061)

References
WP 0010.3
WP 0050
WP 0079

ARRESTING GEAR SYSTEM OPERATION CHECKOUT
STEP
1. Make sure door 103 is installed (WP 0061).
2. Make sure arresting HOOK manual control lever is set to up.
3. Read, record, and reset nose wheel well DDI (WP 0050).

CONDITION/INDICATION
No maintenance code exists.
CORRECTIVE ACTION
Perform troubleshooting (WP 0010.3, Maintenance Code 916).
STEP
4. If arresting hook is not up, manually raise and latch arresting hook.

CONDITION/INDICATION
Arresting hook latches in up position.
CORRECTIVE ACTION
Do arresting hook push-pull control assembly rigging or replace push-pull control assembly (WP 0079).
END OF WORK PACKAGE

0145-1/(2 BLANK)

FIGURE D-4. Example of content for an operational checkout procedure.

Source: https://assist.dla.mil -- Downloaded: 2016-12-09T23:32Z
Check the source to verify that this is the current version before use.

TM X-XXXX-XXX-XX **1264**

FIELD MAINTENANCE
ARRESTING HOOK ACTUATOR PROPERLY SERVICED

INITIAL SETUIP:

Test Equipment	**References (cont.)**
Multimeter (WP 0234, Item 4)	WP 0061

References
WP 0046

TROUBLESHOOTING PROCEDURE
916 CODE DISPLAYED WITH ARRESTING HOOK ACTUATOR PROPERLY SERVICED

CAUTION

To prevent damage due to low level devices (switches/relay contacts), do not test for continuity with multimeter on the RX1 scale. Pin to pin tests that do not go through switches/relay contacts may use RX1 scale.

NOTE

The question used in logic tree "Does continuity exist" means to test for the items listed below:

1. Pin to pin test per procedural step.
2. Shorts to ground.
3. Shorts between surrounding pins on connectors.
4. Shorts between shield and conductors.
5. Shield continuity.

When testing for resistance, also test for shorts to ground.

STEP
1. Do substeps below:
   a. Make sure arresting hook is up and latched.
   b. Open door 32R (WP 0061).
   c. Disconnect 85P-N002C from signal Data Converter CV-3493/ASM-612.

CONDITON/INDICATION
Does continuity exist between 85P-N002C pin 32 and aircraft ground?
DECISION
NO - Step 2 YES - Step 5
STEP
2. Do substeps below:
   a. Manually raise speed brake and install speed brake aircraft ground safety look (WP 0046).
   b. Remove door 103 (WP 0061).
   c. Disconnect 19P-T012 from temperature compensation pressure switch.

CONDITION/INDICATION
Does continuity exist between 19J-T012 pins 3 and 4.
DECISION
NO - Step 7 YES - Step 3

1264-1

FIGURE D-5. Example of content for a troubleshooting procedure (Method A).

Source: https://assist.dla.mil -- Downloaded: 2016-12-09T23:32Z
Check the source to verify that this is the current version before use.

OPERATOR MAINTENANCE
ENGINE TROUBLESHOOTING PROCEDURES

INITIAL SETUP:

Personnel Required
Mechanic (3)

References
WP 0039

References (cont.)
WP 0040
WP 0041
WP 0047

TROUBLESHOOTING PROCEDURE
ENGINE OIL PRESSURE

SYMPTOM

Engine oil press gauge is in red zone.

MALFUNCTION

ENGINE OIL LOW PRESS indicator light is flashing.

CORRECTIVE ACTION

STEP 1.If indicator light is flashing, stop engine immediately (WP 0039).

WARNING

Hot power unit can burn you. Use care when working near power unit.

STEP 2.Check engine oil level (WP 0047).

STEP 3.Check bilge for oil.

a. If oil is present, check engine hoses, clamps, and fittings for leaks.

STEP 4.Start engine (WP 0039).

STEP 5.Check if **ENGINE OIL PRESS** gauge is still in the red zone.

a. Stop engine immediately (WP 0039). Notify unit maintenance.

MALFUNCTION

ENGINE COOLANT TEMPERATURE GAUGE IS IN RED ZONE.

CORRECTIVE ACTION

STEP 1.Check if **COOLANT LOW LEVEL** indicator light is flashing.

a. If **COOLANT LOW LEVEL** indicator light is off.

b. Press **TEST SENSOR BUTTON**.

(1) If **COOLANT LOW LEVEL** indicator does not flash, notify unit maintenance.

(2) If **COOLANT LOW LEVEL** indicator light is flashing,

(a) Stop engine immediately (WP 0039).

WARNING

Hot coolant can burn you. Do not remove radiator cap until coolant temperature gauge reads in bottom one-quarter of green zone. Turn cap slowly to release pressure.

(b) Check coolant level (WP 0040).

STEP 2.Open power unit access door (WP 0041).

FIGURE D-6. Example of content for a troubleshooting procedure (Method B).

Source: https://assist.dla.mil -- Downloaded: 2016-12-09T23:32Z
Check the source to verify that this is the current version before use.

23. SIGNAL NAME: DASEC STATUS WORD DC ANALOG OUTPUT BIT
MEMORY LOCATION: 002150
MEMORY DATA BIT(S): 15 (BINARY)
CONDITION: (None)
SIGNAL FUNCTION: Indicates status of DC analog circuits.
REMARKS: From DASEC to FCC.
PASS: If second digit displayed on HOD is 3 or 7, go to Step 24.
FAIL: Location of fault: replace DASEC (TM 1-1520-238-23 Series).

24. SIGNAL NAME: DASEC STATUS WORD AD/DA BIT
MEMORY LOCATION: 002150
MEMORY DATA BIT(S): 13 (BINARY)
CONDITION: (None)
SIGNAL FUNCTION: Indicates status of analog-to-digital and digital-to-analog circuits.
REMARKS: From DASEC to FCC.
PASS: If third digit displayed on HOD is 1, 3, 5, or 7, go to Step 25.
FAIL: Location of fault: replace DASEC (TM 1-1520-238-23 Series).

25. SIGNAL NAME: DASEC STATUS WORD FD/LS TEST
MEMORY LOCATION: 002150
MEMORY DATA BIT(S): 12 (BINARY)
CONDITION: (None)
SIGNAL FUNCTION: Indicates FD/LS ground test is being run.
REMARKS: From DASEC to FCC.
PASS: If third digit displayed on HOD is 1 or 5, go to Step 26.
FAIL: Location of fault: replace DASEC (TM 1-1520-238-23 Series).

26. SIGNAL NAME: DASEC STATUS WORD ASE BIT
MEMORY LOCATION: 002150
MEMORY DATA BIT(S): 11 (BINARY)
CONDITION: (None)
SIGNAL FUNCTION: Indicates last FD/LS test ASE bit status.
REMARKS: DASEC to FCC.
PASS: If third digit displayed on HOD is 1, go to Step 27.
FAIL: Location of fault: replace DASEC (TM 1-1520-238-23 Series).

27. SIGNAL NAME: DASEC STATUS WORD VD TEST
MEMORY LOCATION: 002150
MEMORY DATA BIT(S): 10 (BINARY)
CONDITION: (None)
SIGNAL FUNCTION: Indicates last FD/LS test VD bit status.
REMARKS: DASEC to FCC.
PASS: If third digit displayed on HOD is 3 or 4, go to Step 28.
FAIL: Location of fault: replace DASEC (TM 1-1520-238-23 Series).

28. SIGNAL NAME: DASEC STATUS WORD AGD BIT
MEMORY LOCATION: 002150
MEMORY DATA BIT(S): 9 (BINARY)
CONDITION: (None)
SIGNAL FUNCTION: Indicates last FD/LS test AGD bit status.
REMARKS: DASEC to FCC.
PASS: If third digit displayed on HOD is 3 or 6, go to Step 29.
FAIL: Location of fault: replace DASEC (TM 1-1520-238-23 Series).

FIGURE D-7. Example of content for a troubleshooting procedure (Method C).

Source: https://assist.dla.mil -- Downloaded: 2016-12-09T23:32Z
Check the source to verify that this is the current version before use.

DIRECT SUPPORT MAINTENANCE
COMPUTER PROCESSOR
OPERATIONAL CHECKOUT AND TROUBLESHOOTING

INITIAL SETUP:

Test Equipment
Test set (WP 0654, Item 4)

References
WP 0005

COMPUTER PROCESSOR
TEST PROCEDURE

STEP

1. Remove computer processor top cover (WP 0005).
2. Apply power to test set and place test set **POWER** switch to **ON** position.

CONDITION/INDICATION

Test set power indicator is illuminated.

MALFUNCTION/CORRECTIVE ACTION

If power indicator does not light, check power source for 28 VDC.

STEP

3. Place **UUT POWER** switch in **CP** position.

CONDITION/INDICATION

CP LEDS momentarily flash.

MALFUNCTION/CORRECTIVE ACTION

If LEDS do not flash briefly, check test set wiring.

STEP

4. Place Test Set **UUT POWER** switch in **CP** position. Quickly press and release the **CP BIT** button on the system interface card. Observe the 10 LEDs on the system I/F CCA.

CONDITION/INDICATION

BIT test routine runs for 30 seconds. During the first 15 seconds the CP LEDs (DS 1- DS 10) will flash. The second 15 second period is the status reporting period. All LEDs are **OFF** during the second 15 second period. After the BIT routine is complete, all LEDs will return to the original **OFF** state.

MALFUNCTION/CORRECTIVE ACTION

a. If **DS1** is illuminated, perform **DS1** testing. Refer to Table 2.
b. If **DS2** is illuminated, perform **DS2** testing. Refer to Table 3.

FIGURE D-8. Example of content for a combination testing and troubleshooting procedure.

Source: https://assist.dla.mil -- Downloaded: 2016-12-09T23:32Z
Check the source to verify that this is the current version before use.

APPENDIX E

MAINTENANCE INSTRUCTIONS

E.1 SCOPE.

E.1.1 Scope. This appendix establishes the technical content requirements for the preparation of maintenance procedures for major weapon systems, and their related systems, subsystems, equipment, weapons replacement assemblies (WRAs), and shop replacement assemblies (SRAs). This Appendix is a mandatory part of this standard. The information contained herein is intended for compliance. The requirements are applicable for all maintenance levels through overhaul (depot) including Maintenance Procedures, National Maintenance Work Requirements (NMWR) and Depot Maintenance Work Requirements (DMWRs).

E.2 APPLICABLE DOCUMENTS.

The applicable documents in section 2 apply to this appendix.

E.3 DEFINITIONS.

The definitions in section 3 apply to this appendix.

E.4 GENERAL REQUIREMENTS.

E.4.1 General. Maintenance instructions shall be prepared for major weapon systems, equipment, components and applicable support and interface equipment. Maintenance procedures and supporting illustrations shall be prepared so that maintenance personnel can perform all required operator through depot level (overhaul) maintenance.

E.4.2 Development of maintenance instructions. Maintenance instructions shall be prepared for all items comprising the weapon system/equipment, such as assemblies, subassemblies, components, wiring, junction boxes, and accessories. Tasks shall be presented in the order in which they are performed. Sound engineering principles and techniques, approved Logistics Management Information (LMI), service experience, performance data on similar equipment, and all other reliability, maintainability, and supportability (RMS) and operational availability (Ao) data available shall be used in the preparation of specific maintenance instructions.

E.4.3 Maintenance level applicability. Requirements contained in this standard are applicable to all maintenance levels unless specifically noted in bold and in parentheses (i.e., **Field**). The labeled requirements shall be applicable to all TMs containing that maintenance level. An explanation of all applicable Department of Army maintenance levels is provided in section 3.

E.4.4 Depot Maintenance Work Requirement (DMWR) and National Maintenance Work Requirement (NMWR). When the contracting activity specifies that a DMWR or NMWR shall be prepared to the best commercial practices, the depot requirements contained in this standard shall be used only as a guide, therefore, the conforming modular DTD for maintenance instructions cannot be used.

Source: https://assist.dla.mil -- Downloaded: 2016-12-09T23:32Z
Check the source to verify that this is the current version before use.

E.4.5 Preparation of digital data for electronic delivery. Technical manual data prepared and delivered digitally in accordance with this standard shall be Extensible Markup Language (XML) tagged using the Document Type Definition (DTD) for Maintenance Instructions and the XML Stylesheet Language (XSL), or style sheets in accordance with MIL-STD-2361. Refer to 4.6 for information on obtaining or accessing this DTD. XML tags used in the modular DTD are noted throughout the text of this standard in bracketed, bold characters (i.e., **<maintwp>**) as a convenience for the TM author and to ensure that the tags are used correctly when developing a document instance.

E.4.6 Use of the DTD/XSLs. The DTD referenced in this standard interpret the technical content and structure for the functional requirements contained in this standard and are mandatory for use. The XSLs referenced herein interpret the style and format. As specified by the contracting activity, XSLs, or style sheets may be used to produce final reproducible paper copy for all TMs prepared in accordance with this standard. For additional information on the DTD and specific XSLs refer to MIL-STD-2361.

E.4.7 Content structure and format. The examples provided herein are an accurate representation of the content structure and format requirements contained in this appendix and shall be followed to permit the effective use of the DTD for Maintenance Instructions.

E.4.8 Style and format. This standard provides style and format requirements for the technical content requirements described in this appendix. These requirements are considered mandatory and are intended for compliance.

E.4.9 Work package development. Technical manual data developed in accordance with this standard shall be divided into individual, stand alone units of information called work packages. A work package shall consist of descriptive, operational, maintenance, troubleshooting, support, or parts information for the weapon system or equipment.

E.4.10 Safety devices and interlocks. Information shall be prepared pertaining to the purpose and location of all safety devices and interlocks in conjunction with the pertinent procedures.

E.4.11 Electrostatic discharge (ESD) sensitive parts. If the equipment contains ESD sensitive parts, components, or circuits, cautions and ESD labels shall be incorporated into the applicable tasks and procedures to ensure ESD sensitive parts are not damaged or degraded during maintenance and operation. Refer to 4.7.20 for requirements on labeling with ESD. Actions which could damage ESD sensitive parts, but which are not directly related to handling or operation of ESD sensitive parts, shall not be annotated with the ESD acronym, but shall be preceded by a caution statement.

E.4.12 Nuclear hardness. If the weapon system/equipment has nuclear survivability requirements (for example, over pressure and burst, thermal radiation, electromagnetic pulse, or transient radiation effects on electronics), cautions and Hardness-Critical Processes (HCP) labels shall be incorporated into the applicable tasks and procedures to ensure the hardness of the equipment is not degraded during handling or operation. Refer to 4.7.19 for requirements on labeling with HCP. Actions which could degrade hardness, but which are not directly involved in establishing nuclear hardness, shall not be annotated with the acronym, but shall be preceded by a caution statement.

Source: https://assist.dla.mil -- Downloaded: 2016-12-09T23:32Z
Check the source to verify that this is the current version before use.

E.4.13 Selective application and tailoring. This standard contains some requirements that may not be applicable to the preparation of all technical manuals. Selective application and tailoring of requirements contained in this standard are the responsibility of the acquiring activity and shall be accomplished using Appendix A, Technical Manual Content Selection Matrixes. The applicability of some requirements is also designated by one of the following statements: unless specified otherwise by the acquiring activity; as or when specified by the acquiring activity.

E.5 DETAILED REQUIREMENTS.

E.5.1 Preparation of maintenance instructions. Maintenance instructions shall be prepared and subdivided into individual work packages that provide maintenance information to enable a technician to receive, process, inspect, clean, service, test and repair the weapon system/ equipment and associated weapons replacement assemblies/shop replacement assemblies (WRAs/SRAs) to an acceptable performance standard. Maintenance tasks shall be developed in accordance with the LMI, Maintenance Allocation Chart (MAC) or Maintenance Plan, and the Source, Maintenance, and Recoverability (SMR) codes developed for the weapon system/ equipment and components. Maintenance work packages shall be arranged to coincide with the Functional Group Code (FGC) sequence followed in the MAC or Repair Parts and Special Tools List (RPSTL).

E.5.2 Types of maintenance. Depending on the type and complexity of the weapon system/equipment, the TM, DMWR, or NMWR shall contain one or more of the following maintenance categories.

E.5.2.1 Preventive Maintenance Checks and Services **(PMCS) (Except for aircraft TMs, DMWR and NMWR) <pmcscategory>**. This maintenance category contains only the PMCS requirements with the remaining maintenance tasks contained in later chapter(s). The PMCS category contains the following work packages in specified order.

a. PMCS Introduction work package **<pmcsintrowp>** (refer to E.5.3.4.1)
b. PMCS work package **<pmcswp>** (refer to E.5.3.4.2)

E.5.2.2 Weapon system/equipment, component, assembly, subassembly, and software maintenance with required PMCS **(Except for aircraft TMs, DMWR and NMWR) <maintenancepmcscategory>**. This maintenance category contains the following work packages in specified order, unless otherwise indicated.

a. Service Upon Receipt work package **(Field only) <surwp>** (refer to E.5.3.2)
b. Equipment/User Fitting Instruction work package **<perseqpwp>** (refer to E.5.3.3)
c. PMCS Introduction work package **<pmcsintrowp>** (refer to E.5.3.4.1)
d. PMCS work package **<pmcswp>** (refer to E.5.3.4.2)
e. The following work packages occur in no specific order.
   (1) Maintenance work package **<maintwp>** (refer to E.5.3.5)
   (2) General Maintenance work package **<maintwp>** (refer to E.5.3.6)
   (3) Lubrication instructions work package **<lubewp>** (refer to E.5.3.7)
f. Illustration List of Manufactured Items work package **(Field level or above only) <manuwp>** (refer to **Error! Reference source not found.**)
g. Torque Limits work package **(Field level or above only) <torquewp>** (refer to E.5.3.10)

Source: https://assist.dla.mil -- Downloaded: 2016-12-09T23:32Z
Check the source to verify that this is the current version before use.

h. Wiring Diagrams work package **(Field level or above only)** <**wiringwp**> (refer to E.5.3.11)

E.5.2.3 Weapon system/equipment, component, assembly, subassembly, and software maintenance without PMCS **(Except for aircraft TMs, DMWR and NMWR) <maintenancecategory>**. This maintenance category shall require either the PMCS or maintenance with PMCS category to be developed also. This maintenance category contains the following work packages in specified order, unless otherwise indicated.

a. Service Upon Receipt work package **(Field only)** <**surwp**> (refer to E.5.3.2)
b. Equipment/User Fitting Instruction work package <**perseqpwp**> (refer to E.5.3.3)
c. The following work packages occur in no specific order.
   (1) Maintenance work package <**maintwp**> (refer to E.5.3.5)
   (2) General Maintenance work package <**maintwp**> (refer to E.5.3.6)
   (3) Lubrication instructions work package <**lubewp**> (refer to E.5.3.7)
d. Illustration List of Manufactured Items work package **(Field level or above only)** <**manuwp**> (refer to **Error! Reference source not found.**)
e. Torque Limits work package **(Field level or above only)** <**torquewp**> (refer to E.5.3.10)
f. Wiring Diagrams work package **(Field level or above only)** <**wiringwp**> (refer to E.5.3.11)

E.5.2.4 Depot weapon system/equipment, component, assembly, and subassembly maintenance **<depotcategory>**. The depot maintenance category contains the following work packages in specified order, unless otherwise indicated.

a. Equipment/User Fitting Instruction work package <**perseqpwp**> (refer to E.5.3.3)
b. The following work packages occur in no specific order.
   (1) Maintenance work package <**maintwp**> (refer to E.5.3.5)
   (2) General Maintenance work package <**maintwp**> (refer to E.5.3.6)
   (3) Lubrication instructions work package <**lubewp**> (refer to E.5.3.7)
   (4) Preventive Maintenance Inspections work package <**pmiwp**> **(aircraft only)** (refer to E.5.3.12.1).
c. Facilities work package <**facilwp**> (refer to E.5.3.8.1)
d. Overhaul Inspection Procedures (OIP) work package <**oipwp**> (refer to E.5.3.8.2)
e. Depot Mobilization Requirements work package <**mobilwp**> (refer to E.5.3.8.3)
f. Quality Assurance (QA) Requirements work package <**qawp**> (refer to E.5.3.8.4)
g. Illustration List of Manufactured Items work package <**manuwp**> (refer to **Error! Reference source not found.**)
h. Torque Limits work package <**torquewp**> (refer to E.5.3.10)
i. The following work packages are for **aircraft only**.
   (1) Aircraft Inventory Master Guide work package <**inventorywp**> (refer to E.5.3.12.2).
   (2) Storage of Aircraft work package <**storagewp**> (refer to E.5.3.12.3).
j. Wiring Diagrams work package <**wiringwp**> (refer to E.5.3.11)

Source: https://assist.dla.mil -- Downloaded: 2016-12-09T23:32Z
Check the source to verify that this is the current version before use.

E.5.2.5 Aircraft maintenance **(aircraft only) <aviationcategory>**. This maintenance category contains the following work packages in specified order, unless otherwise indicated.

a. Service Upon Receipt work package **(AMC only) <surwp>** (refer to E.5.3.2)
b. Equipment/User Fitting Instruction work package **<perseqpwp>** (refer to E.5.3.3)
c. The following work packages occur in no specific order.
   (1) Maintenance work package **<maintwp>** (refer to E.5.3.5)
   (2) General Maintenance work package **<maintwp>** (refer to E.5.3.6)
   (3) Lubrication instructions work package **<lubewp>** (refer to E.5.3.7)
   (4) Preventive Maintenance Inspections work package **<pmiwp>** (refer to E.5.3.12.1).
d. Illustration List of Manufactured Items work package **(AMC level or above only) <manuwp>** (refer to **Error! Reference source not found.**)
e. Torque Limits work package **(AMC level or above only) <torquewp>** (refer to E.5.3.10)
f. Aircraft Inventory Master Guide work package **<inventorywp>** (refer to E.5.3.12.2).
g. Storage of Aircraft work package **<storagewp>** (refer to E.5.3.12.3).
h. Weighing and Loading work package **(ASB only) <wtloadwp>** (refer to E.5.3.12.4).
i. Wiring Diagrams work package **(AMC level or above only)** <**wiringwp**> (refer to E.5.3.11)

E.5.2.6 Auxiliary equipment maintenance **<auxiliarycategory>**. This maintenance category contains the following work packages in specified order.

a. Auxiliary Equipment Maintenance work package **<auxeqwp>** (refer to E.5.3.13).
b. Illustration List of Manufactured Items work package **(Field/Aviation Maintenance Compnay (AMC) level or above only) <manuwp>** (refer to **Error! Reference source not found.**)
c. Torque Limits work package **(Field/Aviation Maintenance Compnay (AMC) level or above only) <torquewp>** (refer to E.5.3.10)
d. Wiring Diagrams work package **(Field/Aviation Maintenance Compnay (AMC) level or above only)** <**wiringwp**> (refer to E.5.3.11)

E.5.2.7 Ammunition maintenance **<ammunitioncategory>**. This maintenance category contains the following work packages in no specified order.

a. Ammunition Maintenance work package **<ammowp>** (refer to E.5.3.14.1).
b. Ammunition Marking Information work package **<ammo.markingwp>** (refer to E.5.3.14.2).
c. Foreign Ammunition (NATO) work package **(Field/Aviation Maintenance Compnay (AMC) or above only) <natowp>** (refer to E.5.3.14.3).

E.5.2.8 Test and inspection maintenance **(Conventional and chemical ammunition only) <testinspectioncategory>**. This maintenance category contains Maintenance work package **<maintwp>** (refer to E.5.3.5)

Source: https://assist.dla.mil -- Downloaded: 2016-12-09T23:32Z
Check the source to verify that this is the current version before use.

E.5.2.9 Shipment/movement and storage maintenance **(Conventional and chemical ammunition only) <shipmentmovementstoragecategory>**. This maintenance category contains Maintenance work package **<maintwp>** (refer to E.5.3.5)

E.5.2.10 Ammunition marking maintenance **(Conventional and chemical ammunition only) <ammomarkingcategory>**. This maintenance category contains Ammunition Marking Information work package **<ammo.markingwp>** (refer to E.5.3.14.2).

E.5.2.11 Preventive maintenance services **(Aircraft preventive maintenance services only) <pmscategory>**. This maintenance category contains Preventive Maintenance Services Inspection work packages **<pms-inspecwp>** (refer to E.5.3.15).

E.5.2.12 Phased maintenance inspections **(Aircraft phased maintenance inspection only) <checklistcategory>**. This maintenance category contains Phased Maintenance Inspection work package **<pmi-cklistwp>** (refer to E.5.3.15.3).

E.5.3 Maintenance work packages. Individual maintenance work packages shall be developed for the overall weapon system/equipment and each maintainable system, subsystem, and WRA/SRA for each applicable maintenance level as indicated in the approved MAC or maintenance plan.

E.5.3.1 Work package content. Work packages shall include WP identification information, initial setup information, and all maintenance tasks, such as remove, inspect, service, test, install, replace, disassemble, assemble, repair, clean, adjust, align, etc. When initial setup information differs for specific maintenance tasks, additional work packages shall be developed. Work packages shall stand-alone and contain complete start-to-finish maintenance procedures. Any follow-on maintenance that must be performed after maintenance procedures are completed shall be included (e.g., disconnect external power, perform operational checks, etc.). When the follow-on maintenance is extensive and is contained in a separate work package, a reference shall be made to the applicable work package. The words "**END OF WORK PACKAGE**" shall be placed below the last data item (i.e., text, illustration, etc.) of the work package containing the maintenance procedure. The maintenance work packages described in E.5.3.2 through E.5.3.15.3 shall be prepared, as applicable. See MIL-HDBK-1222 for examples of work package identification information format.

E.5.3.2 Service upon receipt work package **(Field/Aviation Maintenance Compnay (AMC)only) <surwp>**. This work package shall be prepared and contain information required for the user to ensure that the equipment will be adequately inspected, serviced, and operationally tested before it is subjected to use. Procedures shall be prepared for performing visual inspection of ammunition received from the ammunition supply facility. This inspection shall include verification that ammunition received was that requisitioned. Instructions shall be prepared for a condition check of the shipment (pallets, containers, boxes, and legibility of markings). Instructions shall be prepared to note the quantity of each lot for recording purposes.

E.5.3.2.1 Work package identification information **<wpidinfo>**. Work package identification information is required for this work package (refer to 4.7.9.1).

E.5.3.2.2 Initial setup information **<wpinfo>**. Initial setup information is required for this work package (refer to 4.7.9.2).

Source: https://assist.dla.mil -- Downloaded: 2016-12-09T23:32Z
Check the source to verify that this is the current version before use.

E.5.3.2.3 Service upon receipt tasks <**surtsk**>. For equipment that requires extensive service upon receipt, this work package shall be further subdivided into the following tasks described in E.5.3.2.3.1 through E.5.3.2.3.11.

E.5.3.2.3.1 Siting <**siting**>. Siting instructions peculiar to the equipment shall be prepared, as applicable. In preparing the instructions, operational and maintenance features shall be considered, such as the following:

a. Location.
b. Proximity to power sources.
c. Effective ranges.
d. Terrain requirements to avoid screening, reflections, ground clutter, and other poor operational conditions due to terrain.
e. Technical requirements.
f. Shelter locations.
g. Compensating for adverse siting conditions.
h. When the equipment contains large components such as towers and antennas that require orientation to a baseline during siting.
i. Mobile equipment oriented during installation.

E.5.3.2.3.2 Shelter requirements <**shltr**>. When equipment normally housed in a permanent or semi-permanent shelter (other than a military truck, van, or transportable shelter) during use, the following information shall be prepared.

a. Amount of floor, wall, and height space required.
b. A plan for a typical layout.
c. Required weight capacity of the building floor.
d. Dimensions required for installed equipment.
e. Total weights that the floor must support and the area in square feet over which the total weight will be distributed.
f. Environmental conditions (e.g., venting).
g. Power requirements.
h. Unusual requirements specific to equipment, such as air-conditioning.
i. Architectural and engineering data on beam sizes, lengths, bending moments, and required supports shall not be included.

E.5.3.2.3.3 Service upon receipt of materiel <**surmat**>. The following instructions shall be prepared.

a. Unpacking <**unpack**>. As a minimum, the following information shall be prepared.
   (1) Any special sequence of action necessary to protect the equipment.
   (2) If a special design reusable container is involved for either the end item or components which are authorized for replacement, instructions shall be prepared to report or reenter the empty container through supply channels. Instructions shall be prepared on how to package the unserviceable component in the empty container in the same manner that the new component was packaged if a component is being replaced.

Source: https://assist.dla.mil -- Downloaded: 2016-12-09T23:32Z
Check the source to verify that this is the current version before use.

(3) Man-hour requirements and total man-hours required for unpacking the equipment.

b. Checking unpacked equipment <**chkeqp**>. Instructions shall be prepared for a condition check of the shipment (including that of pallets, containers, boxes, and legibility of markings). The following data shall be included. These instructions may be contained in a table (**standard information**).

(1) Packaging material **<crit.insp.tab>**. For each item **<eqpitem>** of a component requiring inspection, acceptable **<accept>**, reparable **<repairable>**, and nonreparable **<nonrepairable>** conditions shall be provided.

(2) Equipment components **<pecul.insp.tab>**. A table shall be provided that lists, by location <**location**>, each item **<eqpitem>** of a component **<compntassem>** requiring inspection. For each of these items an action **<step1>** shall be provided and, if applicable, a reference <**remarks**> made to another work package (refer to FIGURE E-1).

(3) In addition, the following shall be inserted exactly as stated here.

"Inspect the equipment for damage incurred during shipment. If the equipment has been damaged, report the damage on SF 361, Transportation Discrepancy Report.

Check the equipment against the packing slip to see if the shipment is complete. Report all discrepancies in accordance with applicable service instructions (e.g., for Army instructions, see DA PAM 750-8).

Check to see whether the equipment has been modified."

c. Processing unpacked equipment **<processeqp>**. Instructions shall be prepared for processing the unpacked equipment (e.g., removing excess lubricant from a new rifle), as long as they do not conflict with any warranty provisions. The following information shall be prepared, as applicable.

(1) Any special skills required by processing personnel.

(2) All caustic, corrosive, and/or toxic material used during processing shall be identified and applicable warnings and cautions given.

(3) Instructions on safe disposal of waste products generated during processing actions.

(4) Man-hour requirements and total man-hours required for processing the equipment.

E.5.3.2.3.4 Installation instructions **<install>**. Instructions shall be prepared to install the equipment properly, including use of tools; to make the necessary interconnections; and to lubricate, calibrate, and adjust the equipment.

a. Cable diagrams shall be included or referenced as necessary. When cable assemblies are not supplied but are required for bench test setup, instructions shall be prepared for fabricating interconnecting cable assemblies from spares and bulk supplies. The part number, drawing number, and manufacturer or designer for each part of the cable assembly shall be shown, and wires, connectors, pin connections, and letters or other designators shall be identified.

(1) Instructions shall be prepared for any mating connectors that call for a special procedure either to make the proper connection or to prevent damage to the connector. Cautions shall be included where necessary.

Source: https://assist.dla.mil -- Downloaded: 2016-12-09T23:32Z
Check the source to verify that this is the current version before use.

(2) A wiring diagram shall be prepared which fully identifies each wire to be connected, by color code or wire number if applicable. This diagram shall show the location of each pertinent terminal, which shall be identified by number or other marking, if available, or by position if neither is available. Where appropriate, voltage readings shall be annotated.

(3) All alternate connection patterns required for various modes of operation shall be shown and explained.

(4) Only one diagram shall be used to illustrate interconnection patterns which appear more than once within the same equipment.

b. For installation of plug-in items, diagrams shall be prepared or referenced showing the location of items that are not installed in the equipment when received. Instructions shall be prepared whenever special techniques or connections are required.

E.5.3.2.3.4.1 Assembly of equipment.

a. Instructions shall be prepared for assembling equipment that has been shipped unassembled. When the equipment is to be shelf or rack mounted, instructions shall also be prepared for assembly of the rack, if necessary, and installation of the equipment in the rack. As applicable, power requirements, connections, and initial control settings needed for installation purposes shall be included.

b. When the equipment is shipped or delivered in specially designed containers, unpacking instructions shall be prepared. If the containers are to be used again, kept for future use, turned in to supply, or require a special disposition method, the necessary procedures to restore the containers shall be included.

c. For security measures for electronic data, instructions shall be prepared for handling, loading, purging, overwriting, or unloading classified electronic data under usual conditions. Instructions shall meet current security regulations as they pertain to automation security.

E.5.3.2.3.4.2 Installation of the equipment.

a. Installation instructions shall be prepared for all of the following actions (including placing, mounting, and attaching).

(1) Cable and wiring interconnections.

(2) Proper use of special tools.

b. Installation instructions shall identify all dimensions that must be maintained in placing, mounting, or attaching items.

c. When initial adjustments can be made efficiently during installation, such adjustments shall be included.

d. For equipment designed and intended for use in more than one type of installation (e.g., field, fixed station, and mobile), instructions shall be prepared for each type of installation involved.

Source: https://assist.dla.mil -- Downloaded: 2016-12-09T23:32Z
Check the source to verify that this is the current version before use.

e. If performance of any step in the installation instructions requires the assistance of personnel from a higher level of maintenance, this shall be stated in a note similar to that below.

"**NOTE**

The following installation procedure must be made with the assistance of (*insert level*) maintenance personnel (include Military Occupational Specialty (MOS), if applicable)."

f. Installation instructions shall be considered complete only when they include instructions for:
   (1) All required installation options (e.g., Electrostatic Discharge (ESD) control requirements).
   (2) Accessory items.
   (3) Auxiliary items (those that extend or increase equipment capability).
   (4) Grounding of the equipment for both safety and proper operation.
   (5) Torque requirements.

E.5.3.2.3.4.3 Special applications. Installation instructions, which are common to all special applications of a system, shall be prepared. Details resulting from the installation but peculiar only to the equipment into which the system is being installed shall be omitted (e.g., special treatment required when installing the system in a vehicle or aircraft).

E.5.3.2.3.4.4 Van and shelter installations. The following information shall be prepared only to the extent required for the applicable level of maintenance.

a. Instructions shall be prepared for the removal and replacement of each nonpermanent unit.
b. Installation instructions shall not be prepared when the equipment is permanently installed in vans or shelters.
c. Diagrams and instructions shall be prepared which pertain to electrical and interconnection wiring, exclusive of wiring peculiar to the equipment on which the installation is being made (e.g., headlight, ignition wiring).
d. Instructions shall be prepared for cable run locations, equipment locations, circuit breaker panels, and other similar details.

E.5.3.2.3.5 Preliminary servicing of equipment <**preserv**>. Instructions for all lubrication required on newly installed equipment shall be prepared.

E.5.3.2.3.6 Preliminary checks and adjustment of equipment <**prechkadj**>. Instructions for all checks and adjustments to be made on newly installed equipment shall be prepared. Information on the location of items such as controls and check points shall be prepared or referenced. Instructions shall be prepared for checks and adjustments that must be made before equipment is put into operation and for all other checks required to ensure proper operation of the equipment. These instructions shall include the following, as applicable:

a. Checks for interconnections.

Source: https://assist.dla.mil -- Downloaded: 2016-12-09T23:32Z
Check the source to verify that this is the current version before use.

b. Checks for grounding, including earth ground connections, earth conditioning for conduction, as well as a check of the grounding circuit for negligible resistance.
c. Checks for adequate clearance for rotating or moving devices.
d. Checks of initial settings of all controls that must be preset before power is to be applied.
e. All other checks needed to determine that power can be applied without injuring personnel or damaging the equipment.
f. Firm seating and connection of all plug-in parts, mating connectors, jacks, and plugs.
g. Cable and wire harness routing, dressing, and fastening.
h. Cautions against damaging transistors, diodes, and other electrically sensitive items.
i. Replacement of all covers, inspection and access doors, and plates.
j. Operation of safety interlocks and switches.
k. Operation of ventilating louvers and intake and exhaust ports.
l. Operation and content of liquid cooling systems.
m. Lubricants and Corrosion Prevention Control (CPC) procedures.
n. Switch and control settings that are preset at installation (installer's adjustments).
o. Presetting and adjustment of automatic controls.
p. Terminal connections.
q. Required terminal or capacitor strapping.
r. Preliminary test measurements.
s. Presetting operator's controls.
t. Normal operating checks.
u. After-installation orientation.
v. Burn-in of parts.
w. ESD control standards.
x. After operations, shutdown, checks, and inspections.

E.5.3.2.3.7 Preliminary calibration of equipment <**precal**>. Instructions for all calibration to be made on newly installed equipment shall be prepared.

E.5.3.2.3.8 Circuit alignment <**calign**>. Instructions shall be prepared for circuit alignment procedures. Applicable instructions shall be prepared in the following order.

a. External connections <**extconn**>. Connections to external lines required for each installation option shall be included. Connection instructions shall conform to the requirements for installing wiring and cabling interconnections.
b. Switch settings, patch panel connections, and internal control settings <**setconn**>. Instructions shall be prepared for all switch settings, patch panel connections, and internal control settings required for each installation option and mode of operation.
c. Alignment procedures <**alignproc**>. Instructions shall be prepared for all alignment procedures, including any variations required for different installation options and modes of operation.

Source: https://assist.dla.mil -- Downloaded: 2016-12-09T23:32Z
Check the source to verify that this is the current version before use.

E.5.3.2.3.9 Ammunition service upon receipt tasks. Procedures shall be prepared for performing visual inspection of ammunition received from the ammunition supply facility. This inspection shall include verification that ammunition received was that requisitioned. Instructions shall be prepared for a condition check of the shipment (pallets, containers, boxes, and legibility of markings). Instructions shall be prepared to note the quantity of each lot for recording purposes.

E.5.3.2.3.9.1 Ammunition markings **<ammo.markings>**. Instructions shall be prepared for marking ammunition and ammunition containers.

E.5.3.2.3.9.2 Classification of defects **<ammo.defect>**. Procedures shall be prepared for performing visual inspection of ammunition/containers (pallets, boxes, etc.) and shall include classification and disposition of defective ammunition/containers.

E.5.3.2.3.9.3 Handling **<ammo.handling>**. Procedures shall be prepared for handling ammunition.

a. Unpacking **<ammo.unpacking>**. As a minimum, the following information shall be prepared.
   (1) Any special sequence of action necessary to protect the ammunition.
   (2) If a special design reusable container is involved for either the end item or components, which are authorized for replacement, instructions shall be prepared to report or reenter the empty container through supply channels.
   (3) Man-hour requirements and total man-hours required for unpacking the ammunition.
b. Packing **<ammo.packing>**. As a minimum, the following information shall be prepared.
   (1) Any special sequence of action necessary to protect the ammunition.
   (2) Instructions shall be prepared on how to package defective ammunition.
   (3) Man-hour requirements and total man-hours required for packing the ammunition.

E.5.3.2.3.9.4 Procedures needed to activate ammunition, mine, etc. **<arm>**. Procedures shall be prepared for activation of ammunition, mines, etc., preparatory to detonation.

E.5.3.2.3.10 Other service upon receipt task **<other.surtsk>**. Additional service upon receipt task may be developed when the specific type of service upon receipt tasks are not covered as described in E.5.3.2.3.1 through E.5.3.2.3.9.4. If additional service upon receipt tasks are used, proponent shall submit to LOGSA the requirements for this service upon receipt task type for possible incorporation within future revisions to this standard.

E.5.3.2.3.11 Follow-on maintenance **<followon.maintsk>**. See E.5.3.5.3.31 for requirements.

E.5.3.3 Equipment / user fitting instructions work package **(Field/Aviation Maintenance Compnay (AMC) or above only) <perseqpwp>**. As applicable, equipment/user fitting instructions for personal use equipment shall be prepared.

a. Work package identification information is required for this work package (refer to 4.7.9.1).
b. Initial setup information is required for this work package (refer to 4.7.9.2).

Source: https://assist.dla.mil -- Downloaded: 2016-12-09T23:32Z
Check the source to verify that this is the current version before use.

E.5.3.4 Preventive maintenance checks and services **(PMCS), including lubrication instructions (Except for Conventional and Chemical Ammunition, aircraft TMs, DMWR and NMWR)**. The PMCS shall be prepared and based upon the principles of Reliability Centered Maintenance (RCM) logic and shall include PMCS information and applicable scheduled corrosion inspections. Lubrication instructions may be included in the PMCS information or a separate lubrication order may be prepared. An introduction WP for PMCS shall also be prepared.

E.5.3.4.1 PMCS introduction work package **<pmcsintrowp>**. This work package shall explain the purpose and use of the PMCS data.

E.5.3.4.1.1 Work package identification information **<wpidinfo>**. Work package identification information is required for this work package (refer to 4.7.9.1).

E.5.3.4.1.2 Initial setup information **<wpinfo>**. Initial setup information is not required for this work package.

E.5.3.4.1.3 PMCS data.

a. An explanation shall be prepared for each PMCS entry and any general checks/services that are common to the entire piece of equipment. The explanation for the item numbers shall detail how the item numbers are used when recording results of PMCS on DA Form 2404, Equipment Inspection and Maintenance Worksheet.
b. If lubricaiton instructions are included in the PMCS data, general statement(s) shall be prepared which apply to the overall understanding of lubrication requirements.
c. If lubricaiton instructions are included in the PMCS data, lubricants shall be identified by standard military symbols in accordance with MIL-HDBK-113 and MIL-HDBK-275. The following lubrication interval symbols shall be used, as applicable.

D daily	B biennially
W weekly	H hours (operated)
M monthly	MI miles (operated)
Q quarterly	KM kilometers (operated)
S semiannually	RDS rounds fired
A annually	OC on-condition
MRA maintenance repair action	

d. A statement concerning Corrosion Prevention and Control (CPC) shall be prepared. This statement shall contain maintenance instructions or reference CPC requirements contained in the applicable maintenance instructions. In addition, if the inclusion of such instructions are applicable, a statement shall be prepared which states that the instructions are mandatory.

Source: https://assist.dla.mil -- Downloaded: 2016-12-09T23:32Z
Check the source to verify that this is the current version before use.

(1) Oil filter statement. As applicable, the following statement shall be included verbatim:

"Oil filters shall be serviced/cleaned/changed, as applicable, when:

They are known to be contaminated or clogged,

Service is recommended by AOAP laboratory analysis, or

At prescribed hardtime intervals."

(2) AOAP sampling interval statement. The following statement shall be inserted:

"Engine oil/transmission oil/hydraulic fluids must be sampled at (insert applicable hour/mileage time frame) as prescribed by (insert DA PAM 738-751, Functional Users Manual for the Army Maintenance Management Systems - Aviation (TAMMS-A) or DA PAM 750-8, The Army Maintenance Management System (TAMMS) Users Manual)."

(3) AOAP not available/non-enrolled statement. When a component/equipment is not enrolled in the AOAP or oil analysis support is not available, the following statement shall be inserted:

"This (*enter name of component/equipment*) is not enrolled in the Army Oil Analysis Program. HARDTIME INTERVALS APPLY."

(4) Warranty hardtime statement. The following statement shall be used, as applicable:

"For equipment under manufacturer's warranty, hardtime oil service intervals shall be followed. Intervals shall be shortened if lubricants are known to be contaminated or if operation is under adverse conditions (such as longer-than-usual operating hours, extended idling periods, extreme dust)."

e. When the equipment contains fluids, such as lubrication oil or hydraulic fluid, leakage criteria shall be prepared for the PMCS introduction as follows and referred to in the NOT READY/AVAILABLE IF: column.

"**FLUID LEAKAGE**

It is necessary for you to know how fluid leakage affects the status of the (enter component/equipment name). Following are types/classes of leakage you need to know to be able to determine the status of the (enter component/equipment name). Learn these leakage definitions and remember - when in doubt, notify your supervisor. Equipment operation is allowed with minor leakage (Class I or II). Consideration must be given to fluid capacity in the item/system being checked/inspected. When in doubt, notify your supervisor.

When operating with Class I or II leaks, continue to check fluid levels as required in the PMCS.

Class III leaks should be reported immediately to your supervisor.

Source: https://assist.dla.mil -- Downloaded: 2016-12-09T23:32Z
Check the source to verify that this is the current version before use.

(1) Class I Seepage of fluid (as indicated by wetness or discoloration) not great enough to form drops.

(2) Class II Leakage of fluid great enough to form drops but not enough to cause drops to drip from item being checked/inspected.

(3) Class III Leakage of fluid great enough to form drops that fall from item being checked/inspected."

E.5.3.4.2 PMCS work package **<pmcswp>**.

E.5.3.4.2.1 Work package identification information **<wpidinfo>**. Work package identification information is required for this work package (refer to 4.7.9.1).

E.5.3.4.2.2 Initial setup information **<wpinfo>**. Initial setup information is required for this work package (refer to 4.7.9.2).

E.5.3.4.2.3 PMCS procedures. The PMCS procedures shall include the checks and services data described in E.5.3.4.2.3 and when specified by the acquiring activity, an illustration of the equipment shall be included. See MIL-HDBK-1222 for example of PMCS information. This illustration shall include a routing diagram by which the PMCS will be performed.

E.5.3.4.2.3.1 PMCS data preparation **<pmcstable>**. PMCS data shall consist of the entries described below. These checks and services data entries shall be in the form of **standard information** (refer to FIGURE E-2).

a. Item number **<itemno>**. Item numbers (ITEM NO.) shall be assigned to the PMCS procedures. The PMCS procedures shall be arranged in a logical sequence requiring minimum time and motion on the part of the person(s) performing them and shall be so arranged that there will be minimum interference between persons performing the checks simultaneously on the same end item.

b. Intervals **<interval>**. The designated interval (INTERVAL)(i.e., "before", "during", "after", "weekly", etc.) when each check is to be performed shall be included. Procedures done first or most frequently (i.e., "before" checks and services) shall appear prior to "during" and "after" checks and services. When more advantageous to the user, intervals shall be subgrouped by crewmember(s). The "core" PMCS intervals which can be used are as follows:

Before

During

After

Daily

Weekly

Monthly

Quarterly

Semiannually

Annually

Periodic

Source: https://assist.dla.mil -- Downloaded: 2016-12-09T23:32Z
Check the source to verify that this is the current version before use.

Intermediate **(Aviation only)**

Manhour/day **(Aviation only)**

Phased **(Aviation only)**

Other

a. Man-hours **<manhours>**. When specified by the acquiring activity man-hours (MAN-HOUR) required to complete all prescribed lubrication services shall be included. Man-hours shall be stated to the nearest 10th of an hour.

b. Item to be checked or serviced **<checked>**. The items listed (ITEM TO BE CHECKED OR SERVICED) shall be identified in as few words as possible to clearly identify the item. Usually the common name (e.g., bumper, gas can and mounting bracket, front axle, etc.) will be enough.

c. Procedures **<pmcsproc>**. The procedure (PROCEDURE) by which each check is to be performed, as well as any information required to accomplish each check or service, including lubrication, appropriate tolerances, adjustment limits, and instrument gage readings shall be provided. Illustrations shall be prepared to identify the location or the process of the task being performed and shall be integrated with the procedures. Whenever replacement or repair is recommended, the maintenance task shall be included or the applicable maintenance instruction work package may be referenced. Any periodic/scheduled lubrication procedures required for the equipment may be included in the PMCS procedures and when included shall meet the following requirements:

(1) Lubrication procedures shall be prepared including information on authorized lubricants, lubrication intervals, man-hour requirements, and the AOAP. Lubrication instructions shall be prepared so as to enable the user to receive, lubricate, and return to an acceptable performance standard all components of the equipment in a minimum of time with the skills, tools, test equipment, and spare parts authorized by the LMI, or MAC. Information shall be included for any special lubrication required under extreme temperature, altitude, and humidity conditions within the limits established by the design specification for the equipment.

(2) Lubricant types and abbreviations for flight vehicles and components shall be identified by standard military symbols as specified in MIL-HDBK-275; lubricant types and abbreviations for ground equipment systems, lubricants, functional fluids, preservatives, and specialty products shall be identified by standard military symbols in accordance with MIL-HDBK-113. (Required abbreviations not covered in the appropriate handbook will be provided by the acquiring activity.)

(3) Lubrication instructions shall include all applications, procedures, lubricants, and lubrication points. When grouped lubrication points require the same lubricant at the same interval, the type and number of points shall be identified and described by one of the following methods.

(a) Multi-headed arrows. Multi-headed, solid-shafted arrows shall point to each of the lubrication points.

Source: https://assist.dla.mil -- Downloaded: 2016-12-09T23:32Z
Check the source to verify that this is the current version before use.

(b) Lubrication point notes. Lubrication point notes shall contain instructions for applying lubricants, taking into account the following factors: type, grade, availability, and properties of the prescribed lubricant; expected temperature; lubrication guns and tools available to authorized maintenance level; types of lubrication fittings; and possible ill effects of excessive or insufficient lubrication. Caution shall be stressed where over- or under-lubrication of a part will damage that part or closely associated parts.

(4) Disassembly and hand-packing instructions shall be prepared for medium- and high-speed antifriction bearings that are sensitive to the amount of lubrication applied and do not have bleed holes or relief valves.

(5) Cleaning, disassembling, and assembling instructions required before or after lubrication shall be prepared or referenced.

(6) Instructions shall be prepared for washing and natural drying of finely machined and dirt-sensitive parts before relubricating. Use of compressed air jets or temperatures above 212° F shall not be prescribed.

(7) Instructions shall not specify a coating of preservative material, either before or after packing parts that are lubricated with grease; nor shall they specify an application of oil, solvent, or additional grease to a "sealed-for-life" or prepackaged antifriction bearing.

(8) Where applicable, the statement "For Arctic operation, refer to FM 9-207, Operation and Maintenance of Ordnance Materiel in Cold Weather (0º to -65º F)." shall be inserted as a note. When specific restrictions, preferred grades of lubricant, and other conditions exist, notes shall be made. For example,

"**NOTE**

When MIL-L-2104 lubricant is authorized, use 15W-40 (OE/HDO-15/40) when available and applicable temperature range exists."

or

"**NOTE**

15W-40 oil is not authorized in this particular (*enter component name*)."

d. Equipment not ready/available if: **<eqpnotavail>**. A brief statement of the condition (EQUIPMENT NOT READY/AVAILABLE IF:)(e.g., malfunction, shortage) that would cause the equipment to be less than fully ready to perform its assigned mission shall be provided. If the procedure contains detail steps the statement shall be placed opposite the applicable step.

E.5.3.4.2.4 Mandatory replacement parts **<mrplpart>**. All items that must be replaced during PMCS whether they have failed or not shall be identified.

a. When mandatory replacement parts are required, the information entries shall be placed in a table (refer to FIGURE E-3). The table shall follow the PMCS.

(1) Interval <**title**>

(2) Item number <**itemno**>

Source: https://assist.dla.mil -- Downloaded: 2016-12-09T23:32Z
Check the source to verify that this is the current version before use.

(3) Part number <**partno**>/Commercial and Government Equipment Code (CAGEC) <**cageno**>

(4) National stock number (NSN) <**nsn**>

(5) Nomenclature **<name>**

(6) Quantity <**qty**>

b. If there are no mandatory replacement parts for your PMCS, the following statement shall be included in lieu of parts information:

"There are no replacement parts required for these PMCS procedures."

E.5.3.4.3 Preventive Maintenance Checklist **(PMC) (operator only)**. When specified by the acquiring activity, a PMC shall be prepared as a separate document. Information for a PMC shall come from the applicable operator's PMCS.

E.5.3.5 Maintenance work packages **(Not required for aircraft PM and PMS manuals only) <maintwp>**. Maintenance information shall be prepared and functionally divided into individual maintenance work packages **<maintwp>**. The technical content structure for these work packages shall be consistent from work package to work package. Illustrations shall be prepared to identify the location or the process of the task being performed and shall be integrated with the procedures.

a. Each maintenance work package shall include all authorized maintenance tasks **<maintsk>**. Tasks shall consist of complete start-to-finish maintenance procedures in a logical sequence of occurrence. Task titles **<title>** shall be identical to FGC titles as used in the applicable MAC and RPSTL. Maintenance tasks are described in E.5.3.5.3.

b. Maintenance instructions shall reference or contain all procedures required for any unusual or critical steps such as specifying Quality Assurance (QA) checks (**depot and aviation only**), care and handling of ESD sensitive items and all hazardous material (e.g., ammunition, radioactive components or materials, including prevention of deterioration due to rough handling, exposure to adverse weather conditions, or other hazards). Visual inspection and safety criteria shall be prepared to determine item serviceability. Instructions shall also contain procedures for disposition of defective ammunition. Procedures shall be prepared for use of cleaning materials and paint authorized for use in the specified maintenance operations. Tools shall be described only when the tool or procedure is peculiar or abnormal.

c. When peculiar to the equipment, applicable Corrosion Prevention and Control (CPC) procedures shall be included, or the work package shall reference applicable CPC publications.

d. National Stock Numbers (NSNs) shall not be used in procedural steps, illustrations, or legends of maintenance work packages.

e. Part numbers shall not be used in procedural steps, illustrations, or legends, except when essential for identification.

f. Aviation maintenance TMs shall reference procedures in TM 1-1500-204-23, as applicable.

Source: https://assist.dla.mil -- Downloaded: 2016-12-09T23:32Z
Check the source to verify that this is the current version before use.

g. The maintenance instructions shall be prepared to include required environmental control data and information. Instructions shall be prepared for information on any special maintenance required under extreme temperature, altitude, and humidity conditions within the limits established by the design specification for the equipment.

h. (**DMWRs/NMWRs only**) A Reliability, Availability, and Maintainability (RAM) table shall be prepared listing the pertinent measurable RAM ranges for the major overhauled components (refer to FIGURE E-4). The RAM requirements shall be prescribed by maintenance engineering of the acquiring activity and when established by maintenance engineering shall include critical measurement factors, such as Meantime Between Failures (MTBF), Meantime Between Corrective Maintenance (MTBCM), Maximum Time to Repair (MTTR), availability, and maintenance ratio. The reliability and availability portion of the table shall give the minimum acceptable values while the maintainability portion shall provide the maximum allowable rates. Availability may be expressed as a probability versus a qualified number. When specified by maintenance engineering of the acquiring activity, the RAM information may be prepared in a narrative format (refer to FIGURE E-4).

E.5.3.5.1 Work package identification information **<wpidinfo>**. Work package identification information is required for this work package (refer to 4.7.9.1).

E.5.3.5.2 Initial setup information **<wpinfo>**. Initial setup information is required for this work package (refer to 4.7.9.2).

E.5.3.5.3 Maintenance tasks **<maintsk>**. Maintenance tasks shall be prepared for each authorized maintenance level in the general order listed below. A sample maintenance procedure is provided in MIL-HDBK-1222. For each maintenance task, illustrations shall be used to support or clarify the text, including schematics, wiring diagrams, parts location drawings and other visual aids.

Assembly and preparation for use (**aviation only**) **<prepforuse>**

Servicing **<service>**

Ground handling **<groundtsk>**

Inspection of installed items **<inspinstitm>**

Removal **<remove>**

Disassembly **<dissassem>**

Cleaning **<clean>**

Inspection-acceptance and rejection criteria **<acptrejinsp>**

Nondestructive Testing Inspection (NDTI) **<ndti>**

Repair or replacement **<repair-rplc>**

Alignment **<align>**

Painting **<paint>**

Lubrication **<lube>**

Assembly **<assem>**

Test and inspection **(Field, Sustainment, and ASB only) <test-inspect>**

Source: https://assist.dla.mil -- Downloaded: 2016-12-09T23:32Z
Check the source to verify that this is the current version before use.

Installation **<install>**

Adjustment **<adjust>**

Calibration **<calibration>**

Radio interference suppression **<ris>**

Placing in service **<pis>**

Testing **<test-pass>**

Preservation, packaging, and marking (**DMWR/NMWR only**) **<ppm>**

Overhaul and retirement schedule (**aircraft only**) **<orsch>**

Preparation for storage or shipment **<pss>**

Ammunition markings **<ammo.markings>**

Classification of ammunition defects **<ammo.defect>**

Handling ammunition **<ammo.handling>**

Procedures for ammunition activation **<arm>**

Additional maintenance task **<other.maintsk**>

Follow-on maintenance **<followon.maintsk>**

E.5.3.5.3.1 Maintenance task requirements. Additional mandatory or unique technical information or additional explanations may be required to be included in the maintenance tasks listed in E.5.3.5.3, above. This information is described in E.5.3.5.3.2 through E.5.3.5.3.31. The following general requirements apply to most of the maintenance tasks in E.5.3.5.3, above.

a. Peculiar instructions shall be prepared for lockwiring, installing cotter pins, use of sealing compounds, lubricants, or corrosion prevention compounds and similar operations with applicable references to the expendable and durable items list.
b. Procedures shall not be prepared for separation of bonded, press-fitted, soldered, welded, or riveted parts, or the removal of electronic circuitry parts, unless such removal is necessary to clean, inspect, or test separately.
c. If servicing (i.e., pressurizing and charging with gas, lubrication, etc.) is required upon completion of a maintenance task, include this information as part of the task.
d. Warnings and cautions shall be included whenever chemicals or cleaning compounds are used or combined which may result in a dangerous or hazardous mixture. Whether the danger is to personnel or equipment, it shall be identified and the effect (e.g., gases, fumes, caustic, and fire) shall be stated.
e. For aircraft, instructions shall be prepared for cleaning and washing the entire aircraft. Instructions shall be prepared for the removal of the battery, relief tube, power plant, and armament exhaust deposits, or other items or material as necessary. Instructions shall also be prepared regarding components which require relubrication after the aircraft has been washed or steam cleaned.

Source: https://assist.dla.mil -- Downloaded: 2016-12-09T23:32Z
Check the source to verify that this is the current version before use.

f. Torque requirements, values, and sequences shall be indicated. Only critical torques **<torque>** shall be indicated in task steps. All noncritical torques will be covered by the Torque Limits work package and a reference thereto. Torque values shall be given for all structural attaching hardware, fluid couplings (fuel, oil, hydraulic, pneumatic, etc.), and connections. Torque values shall include torque correction factors when crowfoot extensions, thread lubricants, and cadmium-plated screws or nuts are used. Torque values identified in the tasks must reflect torque wrenches authorized to personnel targeted to perform tasks. Upon completion of torque action, instructions shall be prepared on use of an orientation mark (striping).

g. Such terms as “reverse the disassembly procedures” or “installation is the reverse of removal” shall not be used in any maintenance task.

h. Maintenance procedures or steps that have a major quality assurance effect shall be preceded by a statement such as “QA check”, to identify them.

i. **(DMWRs/NMWRs only)** For items that have parts with specific characteristics, wear limits, specified performance requirements, or fatigue characteristics or tolerances, overhaul inspection procedures (OIP), shall be included, in any applicable maintenance task. The OIP shall consist of the characteristics being inspected for, inspection methods, and the acceptance/reject criteria that must be met. For characteristics having a major quality assurance effect, a statement such as “QA check” shall be placed immediately preceding the characteristic to which it applies. Unless otherwise specified by the acquiring activity, an illustration shall accompany the OIP. Illustrations are strongly encouraged for OIPs and shall only be omitted for very simple systems/parts. A reference letter may be included on the illustration to aid in locating the critical inspection characteristics of the parts. The OIPs shall be placed immediately after the maintenance step for which it applies. When a maintenance task contains an excessive number of parts requiring OIPs, the OIPs may take the form of a consolidated table or list (refer to FIGURE E-5). A separate OIP table or list shall be provided for each part of the item that requires a critical inspection. OIP tables may be placed in a separate WP (refer to E.5.3.8.2). If separate OIP WPs are developed, they shall be referenced within the procedural step where they apply.

E.5.3.5.3.2 Assembly and preparation for use **(aviation only) <prepforuse>**.

a. Procedures shall be prepared for unpacking, assembly, and installation. When the equipment is shipped or delivered in specially designed containers, unpacking instructions shall be prepared. If the containers are to be used again, kept for future use, turned in to supply, or require a special disposition method, the necessary procedures for reassembly of the container shall be prepared. These instructions shall be supported by illustrations. As applicable, power requirements, connections, and initial control settings needed for installation purposes shall be prepared.

b. For security measures for electronic data, instructions shall be prepared for handling, loading, purging, overwriting, or unloading classified electronic data under usual conditions. Instructions shall meet current security regulations as they pertain to automation security.

Source: https://assist.dla.mil -- Downloaded: 2016-12-09T23:32Z
Check the source to verify that this is the current version before use.

E.5.3.5.3.3 Servicing **<service>**.

a. Instructions shall be prepared for replenishment of fuel; oil; hydraulic or other fluids; oxygen, nitrogen, other gases; and tire pressure, plus any other such items and materials (except for lubricants) required for complete servicing of the equipment.
b. Servicing instructions shall be supplemented with a diagram showing locations of regular and emergency servicing points. Items located on each side of the equipment which require servicing will be illustrated and identified as right and left side. NO STEP areas on walkways leading to any tank (in an aircraft) shall be indicated and necessary cautions included.
c. All expendable and durable items used in the servicing instructions shall be referenced and contained in the expendable and durable items list (refer to G.5.6) by military and federal standard nomenclature, part number (MIL-STD), and CAGEC. A servicing diagram shall be referenced or included to support the procedures when required.
d. The warnings and cautions to observe in servicing a particular tank or reservoir (e.g., grounding and prevention of fire hazards) shall be stated clearly.
e. Instructions shall be prepared regarding access to any out-of-the-way or unusual places requiring service.

E.5.3.5.3.4 Ground handling **<groundtsk>**. Descriptions, instructions, and necessary cautions and warnings for ground handling of the aircraft/equipment, including any information needed in extreme cold, heat, humidity, dust, or other unusual or extreme conditions shall be prepared. Instructions for folding and unfolding appropriate parts such as rotor blades or wings, rudders, and fans shall also be included. For aircraft, instructions shall be prepared that are required for blocking and supporting the aircraft during performance of the operation or procedure involved. The following ground handling procedures shall be provided.

a. Towing **<tow>**
b. Jacking **<jack>**
c. Parking **<park>**
d. Mooring **<moor>**
e. Covering **<cover>**
f. Hoisting **<hoist>**
g. Sling loading **<sling>**
h. External power **<extpwr>**

E.5.3.5.3.5 Inspection of installed items **<inspinstitm>**. Instructions shall be prepared for inspection of components, assemblies, or parts installed on the equipment. Procedures shall indicate that inspection will be performed with the item in its normally installed position or condition, considering accessibility and visibility of the item being inspected. The purpose of the inspection (to determine if the item is damaged, deteriorated, or incomplete to the extent that it should be replaced or repaired) shall be stated. Procedures shall be prepared for inspecting solder joints on an electronic item, welds on an armored vehicle, fluid leakage on vehicles, connectors on electronic devices, and other items to identify defects that must be corrected.

Source: https://assist.dla.mil -- Downloaded: 2016-12-09T23:32Z
Check the source to verify that this is the current version before use.

E.5.3.5.3.6 Removal **<remove>**.

a. Instructions shall be prepared in the logical removal sequence prescribed by the FGC. Illustrations shall be used to support and clarify the text. Instructions shall be prepared for checking and recording gear wear patterns, backlash, ESD protective control measures, measurements and tolerances for determining thickness of shims and purpose for shims, and separating and indexing parts for the assembly. Procedures shall identify items which must be matched or precision mated when installed at a later time.

b. **(DMWR/NMWR only)** Instructions shall be prepared for recording the condition of the item/assembly, marking, handling, and storing the item.

E.5.3.5.3.7 Disassembly **<disassem>**. Instructions shall be prepared for disassembly of components, assemblies, or subassemblies to the extent specified by the MAC and SMR coded items. Illustrations shall be used to support and clarify the text. Instructions shall be prepared for precision matched or mated components, assemblies, subassemblies, or parts (other than common hardware), including ESD sensitive items, to insure they will be marked, handled, and stored to preclude damage and to ensure assembly and installation in their matched positions.

E.5.3.5.3.8 Cleaning **<clean>**. Cleaning procedures, methods, special equipment, and materials that are required shall be specified. Instructions shall be prepared for corrosion prevention treatment of metal parts after cleaning.

a. All materials used in the cleaning and corrosion prevention of equipment, components, or parts shall be referenced and contained in the expendable and durable items list (refer to G.5.6).

b. Cleaning materials used for the cleaning of systems, subsystems, and components in order to prepare them for painting, bonding, applying sealants or adhesives, and the removal thereof shall be Hazardous Air Pollutant (HAP) Free. The use of HAP containing cleaner (s) is considered a serious risk to human health and the environment due to potential impacts on installations that are required to perform the specific cleaning tasks. If a HAP containing cleaner(s) must be used due to performance/technical requirements, then is shall be formally approved by the risk acceptance authority for serious-level risks. as identified in the System Safety proram and MIL-STD-882.

c. Procedures shall include cautions to avoid damage of components and to prevent the entrance of water or other solvents into electrical components, ducts, or like openings.

d. Warnings and cautions shall be prepared whenever chemicals or cleaning compounds are used or combined which may result in a dangerous or hazardous mixture. Whether the danger is to personnel or equipment shall be identified and the effect (e.g., gases, fumes, caustic, and fire) shall be stated.

e. For aircraft, detailed instructions shall be prepared for cleaning and washing the entire aircraft. Instructions shall be prepared for the removal of the battery, relief tube, power plant, and armament exhaust deposits, or other items or material as necessary. Instructions shall also be prepared regarding components which require relubrication after the aircraft has been washed or steam cleaned.

Source: https://assist.dla.mil -- Downloaded: 2016-12-09T23:32Z
Check the source to verify that this is the current version before use.

E.5.3.5.3.9 Inspection-acceptance and rejection criteria <**acptrejinsp**>.

a. Inspection requirements shall be prepared to include acceptance and rejection information sufficient to determine that new, repaired, and used components, assemblies and subassemblies conform to wear limits, fits, and tolerances established.

b. (**DMWR/NMWR and aviation only**) Inspection procedures that have a quality impact shall be highlighted. This can be done using a statement such as "QA check" preceding the procedure or by any other means that would emphasize quality assurance. Instructions shall be prepared for tagging all rejected parts, other than mandatory replacement parts, and listing the reasons for rejection. Visual inspection procedures shall be prepared to detect defects such as burrs, cracks, bends, or dents. Accurate and measurable accept or reject requirements and standards shall be prepared which allow the user to determine if the item under inspection conforms to the tolerances, wear limits, fit, or other standards and requirements presented.

E.5.3.5.3.10 Nondestructive Testing Inspection (NDTI) <**ndti**>.

a. (**Aircraft only**) When specified by the acquiring activity, TM 1-1500-335-23 shall be the only NDTI document referenced in the NDTI procedures, and technical provisions of this TM shall be followed.

b. (**Aircraft only**) Individual NDTI procedures shall be specified for each part requiring NDTI. In order to satisfy this requirement, the following shall be prepared for aircraft TMs.

   (1) If penetrant is required, identification of the particular TM 1-1500-335-23 process that is applicable.

   (2) If magnetic particle inspection is required, the specific TM 1-1500-335-23 method, the type of magnetization, and amount of current or ampere turns.

c. The reject criteria shall be specified in all cases. This shall be done by means of a blanket statement, individual criteria for a part, or a combination of both.

d. Instructions for use of visible dye penetrants shall not be included as part of NDTI instructions unless specified otherwise by the proponent activity. When required, refer to TM 1-1500-335-23 for preparation of those instructions.

e. When several NDTI methods are permitted, the relative order of preference shall be specified.

f. Instructions shall be prepared for removing primer and/or paint for TMs that require the removal process as part of NDTI procedures. If a part requires a special process, this procedure must be contained within the NDTI procedure for that part.

g. Cleaning requirements prior to, during, and after NDTI shall be specified. If a part has a built-in bearing, then a procedure shall be prepared to ensure protection of the bearing for the NDTI procedure.

E.5.3.5.3.11 Repair or replacement <**repair-rplc**>. Instructions shall be prepared for repair or replacement to restore an item to a completely serviceable or fully mission capable status.

E.5.3.5.3.12 Alignment <**align**>. Detailed instructions shall be prepared for alignment procedures to adjust specified variable elements of an item to bring about optimum or desired performance.

Source: https://assist.dla.mil -- Downloaded: 2016-12-09T23:32Z
Check the source to verify that this is the current version before use.

E.5.3.5.3.13 Painting **<paint>**. Instructions shall be prepared for required painting, refinishing, and marking of assembled components, assemblies, subassemblies, or end item. Reference may be made to TM 55-1500-345-23, TM 1-1500-204-23, SB 11-573, TB 43-0209, TB 43-0118, TM 43-0139, or others as appropriate.

E.5.3.5.3.14 Lubrication **<lube>**.

a. Pertinent mandatory lubrication instructions, CPC procedures, and general lubrication instructions not contained elsewhere shall be prepared and appear here.
b. (**DMWR/NMWR and aviation only**) Lubrication procedures which have a major quality assurance effect shall be immediately preceded by a statement such as "QA check" to identify them.

E.5.3.5.3.15 Assembly **<assem>**. Step-by-step procedures shall be prepared for assembling items disassembled or removed that make up the components, assemblies, or subassemblies. Illustrations shall be used to support and clarify the text.

a. Instructions shall be prepared for assembling precision-matched or mated parts marked during disassembly.
b. Instructions shall be prepared for checking and recording gear wear patterns, backlash, shimming requirements, and the indexing of parts to ensure proper alignment during assembly. The purpose of shims shall be given, (e.g., adjust backlash, prevent metallurgical reaction, etc.).
c. Torque requirements, values, and sequences shall be indicated. Only critical torques **<torque>** shall be indicated in task steps. All non-critical torques will be covered by the Torque Limits work package (refer to E.5.3.10). Torque values shall be given for all structural attaching hardware, fluid couplings (fuel, oil, hydraulic, pneumatic, etc.), and connections. Torque values shall include torque correction factors when crowfoot extensions, thread lubricants, and cadmium-plated screws or nuts are used. Torque values identified in the tasks must reflect torque wrenches authorized to personnel targeted to perform tasks. Upon completion of torque action, instructions shall be prepared on use of an orientation mark (striping).
d. Instructions such as "reverse the disassembly procedure," shall not be used.
e. ESD standards, ESD sensitive items along with the protective and control measures to be taken, and CPC procedures shall be identified.
f. (**DMWR/NMWR and aviation only**) Assembly procedures which have a major quality assurance effect shall be preceded by a statement such as "QA check" to identify them.

E.5.3.5.3.16 Test and inspection **<test-inspect>**. Procedures shall be prepared for testing and inspection during or after assembly to ensure proper assembly of the item. Correct methods of testing; procedures for making tolerance checks; and procedures for inspection of distance measurements (e.g., clearance, end play, backlash) shall be prepared. Measurement criteria and tolerances shall reflect the Test Measurement and Diagnostic Equipment (TMDE) available to the user. For Depot and aviation only, test and inspection procedures which have a major quality assurance effect shall be preceded by a statement such as "QA check" to identify them.

Source: https://assist.dla.mil -- Downloaded: 2016-12-09T23:32Z
Check the source to verify that this is the current version before use.

E.5.3.5.3.16.1 Inspection and test of conventional and chemical ammunition or components containing radioactive materials **(field, below depot sustainment, and ASB only) <test-inspect>**. The following information shall be prepared.

a. A statement to the effect that inspection criteria are provided to assure that maintenance performed will restore the items to an Acceptable Quality Level (AQL) shall be included. The types of inspection procedures shall, at a minimum, include a pre-maintenance inspection to be conducted during unpacking, in-process inspections, and final acceptance inspection. Regulations and technical publications relating to policy responsibility and procedures applicable to ammunition stockpile reliability, ammunition surveillance, radioactive materials procedures, and quality evaluation programs shall be referenced. When approved by the acquiring activity these procedures contained in other publications shall be included in the task.

b. Instructions shall be prepared for inspection methods or techniques used to detect defective components or end items being processed. Classification of Material Defects tables (**standard information**) **<defect.tab>** shall be prepared for ammunition components and packaging and packing material (refer to FIGURE E-6). The tabulated data shall include the following entries.

   (1) A list of categories of defects **<defecttype>** (minor, major, critical) by the defects attributable to each component <**condition**>.

   (2) The corrective action to be taken **<actionreq>** or a reference **<xref>/<link>** to the corrective action.

   (3) The inspection methods **<insp-method>** used to determine if corrective action was accomplished.

   (4) The acceptable quality level **<acceptqual>** established for each defect.

c. Visual inspection criteria shall be prepared for the packing of the items in conformance with the inspection criteria noted in E.5.3.5.3.16.1a.

d. Detailed procedures and criteria shall be prepared for function testing. When test fixtures must be fabricated, diagrams and instructions for the fabrication shall be prepared. Where ammunition is required for function testing weapons, it shall be identified by Department of Defense Ammunition Code (DODAC), NSN, and nomenclature, to include dummy rounds.

e. Instructions shall be prepared to establish a uniform system of examination for deterioration or damage. Definitions shall be prepared to explain minor, major, and critical defects. Lower maintenance levels shall be included, when appropriate.

f. A classification of defects (i.e., minor, major, or critical) for both functioning and nonfunctioning categories shall be included. The criteria shall conform to the publications noted in E.5.3.5.3.16.1b above.

Source: https://assist.dla.mil -- Downloaded: 2016-12-09T23:32Z
Check the source to verify that this is the current version before use.

g. Instructions for disposition of lots shall be prepared and shall be as specified by the acquiring activity. The following statements shall be included in the TM verbatim:

(1) "Each lot of material shall be inspected and screened 100 percent if one critical nonfunctioning defect is observed. If a critical functioning defect occurs, save remaining pieces and components: suspend the lot from local issue and use. Submit malfunction reports as prescribed in AR 75-1 (Malfunctions Involving Ammunition and Explosives). Disposition instructions will be furnished by the US Army Materiel Command."

(2) "A lot of materiel is acceptable for issue if the acceptable criteria as indicated in *(insert applicable table number)* are met."

(3) "Report all lots of materiel rejected under applicable serviceability table for disposition instructions to: Commander, US Army Armament, and Chemical Logistics Activity, ATTN: AMSMC-DSM, Rock Island, IL 61299-6000. Include a statement describing the capability and workload situation of your organization as to whether you are capable of reworking/demilitarizing the item."

E.5.3.5.3.16.2 Pre-embarkation inspection of material in units alerted for overseas movement **<test-inspect>**. Pre-embarkation inspection procedures shall be prepared, if applicable, and shall be as specified by the acquiring activity.

E.5.3.5.3.17 Installation **<install>**. Procedures shall be prepared for installation of the item. Illustrations shall be used to support and clarify the text.

a. Instructions shall be prepared for painting, refinishing, and marking the item prior to its installation in the next higher assembly of the equipment.

b. Inspection procedures shall be prepared for checking alignment and adjustment of the item during the installation sequence. These instructions shall include a statement that adjustment, servicing, testing, and/or an operational check is required.

c. Instructions such as "reverse the removal procedure," shall not be used.

d. Peculiar instructions shall be prepared for lockwiring, installing cotter pins, use of sealing compounds, lubricants, or corrosion prevention compounds and similar operations with applicable references to the expendable and durable items list.

e. Information shall be prepared for shelf-life items, mandatory replacement parts, etc.

f. Instructions shall be prepared for pressurizing and charging with gas, including all safety requirements.

E.5.3.5.3.18 Adjustment **<adjust>**. Adjustment instructions shall be prepared that may be required before operating the part, system, or end item.

E.5.3.5.3.19 Calibration **<calibration>**. Equipment that requires calibration after assembly or installation shall be indicated, and reference shall be made to the publication containing the applicable calibration procedure. The calibration procedures contained in other publications may be included in the task, when approved by the acquiring activity.

Source: https://assist.dla.mil -- Downloaded: 2016-12-09T23:32Z
Check the source to verify that this is the current version before use.

E.5.3.5.3.20 Radio interference suppression **<ris>**.

a. Instructions shall be prepared for primary components in the suppression system and replacement of these primary components.
b. Secondary components shall be referenced to pertinent maintenance procedures containing removal and installation instructions.
c. Instructions shall be prepared for testing radio interference suppression components.

E.5.3.5.3.21 Placing in service **<pis>**. Instructions shall be prepared for actions not previously noted that may be required for an assembly, component, or end item. Instructions shall be prepared such as removal of an item from storage and preparation for installation on an end item. Final servicing checks, calibration, leak checks, charging, pressurizing, and operational checks shall be prepared.

E.5.3.5.3.22 Testing **<test-pass>**. Instructions shall be prepared, as applicable, to test the performance of components, assemblies, and subassemblies prior to installation in the end item. The following instructions are required for depot and aviation maintenance.

a. (**DMWR/NMWR and aviation only**) Instructions shall be prepared for recording the results of the testing. All testing procedures that have a major quality assurance effect shall be preceded by a statement such as "QA check" to identify them.
b. (**DMWR/NMWR only**) Information shall be prepared for final testing of the highest assembly or equipment/end item involved to assure that the parameters of reliability, availability, maintainability, and durability are met. The following procedures shall be prepared.
   (1) Inspection. Inspection procedures shall be prepared that are required prior to final testing to assure that the item is complete and ready for final testing. Instructions shall be prepared for any minor preparation tasks needed prior to final testing.
   (2) Lubrication. Any final lubrication procedures that need to be done prior to final testing shall be prepared.
   (3) Final test procedures. Test procedures, performance standards, and tolerances shall be prepared to establish that the equipment is adequately overhauled and ready for issue without qualifications. The procedures shall list all tools, TMDE, jigs, fixtures, and other support items required for the test in the initial setup information. Operating instructions shall be prepared for special test equipment where necessary. Procedures shall be prepared for minor adjustments that can be done without disassembling equipment. Complete procedures shall be prepared for burn-in or run-in tests.

Source: https://assist.dla.mil -- Downloaded: 2016-12-09T23:32Z
Check the source to verify that this is the current version before use.

(4) Final painting, refinishing, and marking. Procedures shall be prepared for any final painting, refinishing, and marking that could not be done during the overhaul procedures. The materials and tools required to do the job shall be identified. Depot level maintenance shall include data plate replacement data. For data plates which require replacement, the type of material shall be indicated. Detailed preparation and attachment instructions shall be prepared. The instructions for stamping data plates shall include the initials of the facility performing the overhaul or modification, the contact number (if applicable), the date of overhaul or modification, the part number, and the total operating time since new (if applicable). The instructions shall specify the letter and figure sizes and indicate their placement (adjustment to manufacturer's data). The following statement shall be inserted.

"When sufficient space is not available on the existing data plate to add information, the plate shall be replaced and all pertinent data transferred to the new plate. Data shall not be stamped directly on any part, assembly, or item of equipment except when approved by the Government."

E.5.3.5.3.23 Preservation, packaging, and marking **(DMWR/NMWR only) <ppm>**. The following instructions shall be prepared.

a. The packaging requirements for all components and end items under maintenance shall be requested from the items' source of supply, packaging management activity during the document's initial development and any revisions. The following packaging information shall be included verbatim in the DMWR/NMWR:

"PACKAGING

Military preservation, Level A packing, and marking shall be accomplished in accordance with the specific packaging instructions contained in WP (*insert work package number*).

MARKING FOR SHIPMENT AND STORAGE

a. Storage: In addition to any special markings called out on the special packaging instruction (SPI) or in the packaging requirements code, all unit packages, intermediate packs, exterior shipping containers, and, as applicable, unitized loads shall be marked in accordance with MIL-STD-129 including bar coding. The repair facility is responsible for application of special markings as required by MIL-STD-129 regardless of whether specified in the contract/order or not. Special markings include, but are not limited to, Shelf-life markings, structural markings, and transportation special handling markings. The marking of pilferable and sensitive materiel will not identify the nature of the materiel.

Source: https://assist.dla.mil -- Downloaded: 2016-12-09T23:32Z
Check the source to verify that this is the current version before use.

b. Shipment: The repair facility shall apply identification and address markings with bar codes in accordance with MIl-STD-129. A Military Shipment Label (MSL) is required for all shipments except contractor to contractor. The MSL will include both linear and 2D bar codes per the standard. Military Shipping Label: Military Shipment Labels may be created using the Computer Automated Transportation Tool Military Shipment Label/Issue Receipt Release Document (CATT MSL/IRRD).

HEAT TREATMENT AND MARKING OF WOOD PACKAGING MATERIALS

Wood Packaging Materials (WPM) (i.e., boxes, crates, skids, pallets, and any wood used as inner packaging made of non-manufactured wood) shall be constructed of lumber that has been heat-treated in accordance with the requirements of International Standard for Phytosanitary Measures (ISPM) –15. The WPM manufacturer shall be affiliated with an inspection agency accredited by the board of review of the American Lumber Standard Committee. The WPM manufacturer shall ensure traceability to the original source of heat treatment. Each piece of WPM shall be marked to show the conformance to the International Plant Protection Convention Standard. Certification markings shall be indelible and permanent. They may be stamped, stenciled, or branded directly onto or into the WPM. Certification marks shall be applied in a visible location on at least two opposite sides of the wood packaging product, but are not required on each individual component piece of a wood packaging product. On dunnage, the marking shall be applied every two feet to opposite surfaces of each piece. If possible, the mark shall be visible when the dunnage is placed in the load to enable inspectors to verify the WPM's compliance without unloading or unstuffing the container. Foreign manufacturers shall have the heat treatment of WPM verified in accordance with their National Plant Protection Organization's compliance program.

ALTERNATIVES

The packaging requirements have been validated and the method of preservation/packing has proven successful in meeting the needs of the military distribution system, including undefined storage and shipment throughout the world. Tailoring of the packaging instructions may only be authorized by the packaging requirements developer. If tailored, prototype package is required to validate the sizes and fit requirements. Minor dimensional and size changes are acceptable provided email notification is provided to the packaging requirements developer. Any design changes or changes in the method of preservation that provide a cost savings without degrading the method of preservation or packing or affecting the serviceability of the item will be considered and responded to within 10 days of submission. The equipment proponent reserves the right to require testing to validate alternate preservation methods, materials, alternates, blocking, bracing, cushioning, and packing.

Source: https://assist.dla.mil -- Downloaded: 2016-12-09T23:32Z
Check the source to verify that this is the current version before use.

REUSE OF PACKAGING MATERIALS

The cushioning material and the fiberboard boxes may be reused provided:

a. There is no visible damage to material.
b. The foam cushioning has not taken a permanent set.
c. The fiberboard has no punctures, delaminating, or crushed flutes.

The water vapor proof barrier bag be shall never be reused. Always use new barrier material, evacuate air from the barrier bag, and conduct a snap test after two hours on each bag to ensure seal is holding. All components of the wood box/crate must be present, properly secured in position, and not broken. Splits are acceptable provided the boards remain secured and not loose. When reapplying the lid, fasteners shall be placed 1/2 inch away from the previous fastener hole. Strapping shall be applied per MIL-HDBK-774.

CONTAINER REPAIR

Each long life metal reusable container will be inspected and reconditioned in accordance with TB 9-289, TB 55-8100-200-24, or SB 725-92-1 and the applicable container-drawing package. Container drawings are available upon request from the packaging requirements developer. This reconditioning effort includes mandatory replacement of breather valves, humidity indicators, data plates, sealing gaskets, and desiccant, plus all shear mounts with an age factor of five years or older. It also includes a leak test after reconditioning, inspection and replacement of unserviceable wood skids, and touch up or total stripping and refinishing of the container surfaces with CARC paint."

b. Special instructions. Instructions shall be prepared for any special or unique preservation, packaging, or marking instructions that apply to the equipment. These instructions shall include warnings, cautions, or references concerning ESD, nuclear material, hazardous substances, special marking instructions, or any other instructions required that are not covered in the standard packaging and preservation information.

E.5.3.5.3.24 Overhaul and retirement schedule **(aircraft only) <orsch>**. This maintenance task shall include the following statement in the introduction and associated table (**standard information**).

“OVERHAUL AND RETIREMENT SCHEDULE

Units of operating equipment that are to be overhauled or retired at the period specified are listed here. Unless otherwise specified in TM 1-1500-328-23, Aeronautical Equipment Maintenance Management Policies and Procedures, removal of equipment for overhaul may be accomplished at the inspection nearest the time when overhaul is due.”

Source: https://assist.dla.mil -- Downloaded: 2016-12-09T23:32Z
Check the source to verify that this is the current version before use.

The overhaul and retirement schedule (refer to FIGURE E-7) shall consist of the entries described below. The overhaul and retirement schedule may be prepared as a table.

a. Part name. The name of the part shall be listed. An asterisk (*) shall precede the part name if the part is an indentured subassembly.
b. Part number. The official part number of the part listed.
c. Overhaul interval hours. The maximum operating time allowed on the part before it is to be overhauled.
d. Overhaul interval notes. Any additional information required on the part's overhaul interval.
e. Retirement interval hours. Maximum operating time allowed on the part before it is removed and condemned.
f. Retirement interval notes. Any additional information required on the part's retirement interval.

E.5.3.5.3.25 Preparation for storage or shipment **<pss>**. As applicable, the following instructions shall be prepared.

a. Security procedures and special transportation requirements for sensitive items (security, terrorists, etc.).
b. Special preservation, packaging, packing, marking, ESD protective and control measures, and shipping instructions, including use of special design reusable containers.
c. Instructions on special use of corrosion-preventive compounds, moisture barriers, and desiccant materials.
d. Instructions for applying special identifying, shipping, and cautionary markings to shipping containers; including security classification, special temperature requirements, and shelf life.
e. Instructions will be provided by the proponent activity for placing equipment in, and for removing it from, administrative storage.
f. Procedures for proper handling, blocking, and bracing of basic load ammunition when being transported in trucks and other tactical vehicles.
g. **(Conventional and chemical ammunition only)** Basic load storage, quantity-distance class, storage compatibility groupings, storage temperatures, stacking limits, and other pertinent storage requirements.
h. For aviation ground support equipment, a reference to TM 1-1500-204-23 for general technical information for preparation for storage or shipment.

E.5.3.5.3.26 Classification of defects **<ammo.defect>**. Procedures shall be prepared for performing visual inspection of ammunition/containers (pallets, boxes, etc.) and shall include classification and disposition of defective ammunition/containers.

E.5.3.5.3.27 Handling ammunition **<ammo.handling>**. Procedures shall be prepared for handling ammunition.

a. Unpacking **<ammo.unpacking>**. As a minimum, the following information shall be prepared.
    (1) Any special sequence of action necessary to protect the ammunition.

Source: https://assist.dla.mil -- Downloaded: 2016-12-09T23:32Z
Check the source to verify that this is the current version before use.

(2) If a special design reusable container is involved for either the end item or components which are authorized for replacement, instructions shall be prepared to report or reenter the empty container through supply channels.

(3) Man-hour requirements and total man-hours required for unpacking the ammunition.

b. Packing <**ammo.packing**>. As a minimum, the following information shall be prepared.

(1) Any special sequence of action necessary to protect the ammunition.

(2) Instructions shall be prepared on how to package defective ammunition.

(3) Man-hour requirements and total man-hours required for packing the ammunition.

E.5.3.5.3.28 Ammunition markings <**ammo.markings**>. Instructions shall be prepared for marking ammunition and ammunition containers.

E.5.3.5.3.29 Procedures needed to activate ammunition, mine, etc. <**arm**>. Procedures shall be prepared for activation of ammunition, mines, etc.

E.5.3.5.3.30 Additional maintenance task <**other.maintsk**>. Additional maintenance task may be developed when the specific type of maintenance tasks are not covered as described in E.5.3.5.3.2 through E.5.3.5.3.29. If additional maintenance tasks are used, proponent shall submit to LOGSA the requirements for this maintenance task type for possible incorporation within future revisions to this standard.

E.5.3.5.3.31 Follow-on maintenance task <**followon.maintsk**>. As applicable, instructions shall be prepared for follow-on maintenance and shall be the last task in the work package. Follow-on is a maintenance condition which must be accomplished sometime following the completion of a task to clean up or undo actions performed during the task. For example, in order to fix a component a task might require that an access panel be removed. The panel would then need to be replaced as a follow-on action. This task might be performed sometime after the repair task is completed, but not immediately after the repair task. Other maintenance tasks might be performed in the same area before the follow-on task is accomplished.

E.5.3.6 General maintenance work package <**gen.maintwp**>. This work package shall be prepared as directed by acquiring activity and contain common, general, or standard maintenance procedures (e.g., specific torque wrench usage, lockwire procedures, “O” ring seal installation, external power connections, etc.) applicable to other maintenance work packages contained within the TM that require the general maintenance procedures to complete the tasks. Maintenance tasks listed in E.5.3.5.3 may be included, as applicable. This WP may be referenced in other maintenance work packages.

E.5.3.6.1 Work package identification information <**wpidinfo**>. Work package identification information is required for this work package (refer to 4.7.9.1).

E.5.3.6.2 Initial setup information <**wpinfo**>. Initial setup information is required for this work package (refer to 4.7.9.2).

E.5.3.6.3 Maintenance tasks <**maintsk**>. Maintenance tasks requirements in E.5.3.5.3 shall be included.

Source: https://assist.dla.mil -- Downloaded: 2016-12-09T23:32Z
Check the source to verify that this is the current version before use.

E.5.3.7 Lubrication instructions work package **<lubewp>**. This work package shall be prepared as directed by acquiring activity and contain the requirements outlined in E.5.3.7.1 through E.5.3.7.4.

E.5.3.7.1 Work package identification information **<wpidinfo>**. Work package identification information is required for this work package (refer to 4.7.9.1).

E.5.3.7.2 Initial setup information **<wpinfo>**. Initial setup information is required for this work package (refer to 4.7.9.2).

E.5.3.7.3 Lubrication instructions. Lubrication schedules shall be prepared to present all applications and procedures, lubricants, and lubrication points to completely lubricate equipment.

E.5.3.7.4 Lubrication charts.

a. Lubrication charts shall consist of a main drawing prepared as a three-dimensional diagram, and such enlarged or detailed views as are considered necessary to identify items which otherwise would be obscured. They shall show all lubrication requirements for all parts of the equipment requiring periodic lubrication, other than those lubricated by the main engine oil system. The charts shall also indicate type of lubricant, method of application, and frequency (refer to FIGURE E-8).
b. Use of black silhouette figures representing a likeness of the tool used in the application (oil can, grease gun, brush, or hand) shall be the accepted means of presenting application methods on the lubrication chart.
c. Abbreviations, as specified in MIL-HDBK-275, shall be used to present lubricant types. In the event a lubricant does not have an abbreviation listed in MIL-HDBK-275, the abbreviation shall be provided by the procuring activity. Assigned application symbols, type abbreviations, and frequency shall be placed within the standard lubrication symbols.
d. Each application symbol and lubricant abbreviation used shall be defined. Notes may be used to specify requirements other than normal.

E.5.3.8 DMWR/NMWR specific maintenance work packages.

E.5.3.8.1 Facilities work package **(DMWR/NMWR only) <facilwp>**. This work package shall be prepared as directed by acquiring active. A description of all facilities, such as test stands, test tracks, clean rooms, shielded rooms, or other facilities that are required to do the maintenance work shall be included. Reference shall be provided for any specifications or standards that these facilities must meet. When approved by the acquiring activity, data from these standards may be included in the procedures.

a. Work package identification information **<wpidinfo>** is required for this work package (refer to 4.7.9.1).
b. Initial setup information **<wpinfo>** is required for this work package (refer to 4.7.9.2).

Source: https://assist.dla.mil -- Downloaded: 2016-12-09T23:32Z
Check the source to verify that this is the current version before use.

E.5.3.8.2 Overhaul inspection procedures **(OIP) work package (DMWRs/NMWRs only) <oipwp>**. Unless otherwise specified by the acquiring activity, OIPs shall be prepared for items that have parts with specific characteristics, wear limits, specified performance requirements, or fatigue characteristics or tolerances. A separate work package shall be provided for each item containing such parts. Within each work package, a separate OIP shall be provided for each part of the item that requires a critical inspection.

E.5.3.8.2.1 Work package identification information **<wpidinfo>**. Work package identification information is required for this work package. (Refer to 4.7.9.1.)

E.5.3.8.2.2 Initial setup information **<wpinfo>**. Initial setup information **<wpidinfo>** is required for this work package. (Refer to 4.7.9.2)

E.5.3.8.2.3 Overhaul Inspection Procedures (OIP). The OIP shall contain the characteristics being inspected for, inspection methods, and the acceptance/reject criteria that must be met. For characteristics having a major quality assurance effect, the acronym "QA" shall be placed immediately preceding the characteristic to which it applies. Unless otherwise specified, an illustration shall accompany the OIP. Illustrations are strongly encouraged for OIPS and shall only be omitted for very simple systems/parts. A reference letter may be included in the OIP to locate the critical inspection characteristics of the parts on the illustrations. The OIPs may be contained in a table or a list (refer to FIGURE E-5). References to these OIP work packages shall be included within the applicable maintenance procedural step (i.e. disassembly, reassembly, testing, etc.) or preshop analysis procedural step where they apply.

E.5.3.8.3 Depot mobilization requirements work package **(DMWR/NMWR only) <mobilwp>**. When specified and provided by the acquiring activity, the modifications, deletions, or additions to the preshop analysis or overhaul procedures required during mobilization shall be included in this WP. The data described in E.5.3.8.3.1 through E.5.3.8.3.4 shall be included.

E.5.3.8.3.1 Work package identification information **<wpidinfo>**. Work package identification information is required for this work package (refer to 4.7.9.1).

E.5.3.8.3.2 Initial setup information **<wpinfo>**. Initial setup information is required for this work package (refer to 4.7.9.2).

E.5.3.8.3.3 Introduction for depot mobilization requirements work package **<intro>**. The following text shall be included verbatim.

"**DEPOT MOBILIZATION REQUIREMENTS**

INTRODUCTION

Scope

The purpose of this work package is to streamline and accelerate the overhaul process during the mobilization of the depot.

Explanation of Mobilization Requirements

The mobilization requirements include a list of instructions for modifying preshop analysis and/or overhaul procedures. The pertinent procedures to be modified are referred to by page and work package number, followed by the action to be taken."

Source: https://assist.dla.mil -- Downloaded: 2016-12-09T23:32Z
Check the source to verify that this is the current version before use.

E.5.3.8.3.4 Mobilization requirements **<mobilreq>**. Mobilization requirements consist of a list of actions that shall be in effect during depot mobilization. The work packages that are modified by these actions shall be noted. This data can be in provided in a table (standard information) **<mobiltab>** (refer to FIGURE E-9). Alternatively, if the actions are already listed in another work package or packages, a statement shall be made that includes references to those actions (refer to FIGURE E-9). Alternatively, if the actions are already listed in another work package or packages, a statement shall be made that includes references to those actions.

E.5.3.8.4 QA requirements work package **(DMWR/NMWR only) <qawp>**. This work package shall be prepared and include the data described in E.5.3.8.4.1 through E.5.3.8.4.10.

E.5.3.8.4.1 Work package identification information **<wpidinfo>**. Work package identification information is required for this work package (refer to 4.7.9.1).

E.5.3.8.4.2 Initial setup information **<wpinfo>**. Initial setup information is required for this work package (refer to 4.7.9.2).

E.5.3.8.4.3 Statement of responsibility **<responsibility>**. The following information shall be included.

> "**STATEMENT OF RESPONSIBILITY**
>
> The depot/contractor is responsible for complying with the quality assurance requirements contained in this work package and in accordance with ISO 9000 Series standards or equivalent. The commodity manager reserves the right to perform inspections or make changes that ensure the depot work being done meets the quality standards of the DMWR and preserves the inherent reliability of the item."

E.5.3.8.4.4 Definitions **<definitions>**. Definitions shall be prepared for all QA terms extensively used in the Depot Maintenance Work Requirement (DMWR) and National Maintenance Work Requirement (NMWR). Alternatively, if the definitions are listed in another publication, that publication shall be referenced.

E.5.3.8.4.5 Special requirements for inspection tools and equipment **<specialreq>**. Any special requirements for the maintenance and calibration of tools and test equipment used for QA inspections shall be listed.

E.5.3.8.4.6 Certification requirements **<certreq>**. Any certification or licensing requirements for processes, procedures, materials, equipment, or personnel skills shall be listed. The list shall include appropriate standards, specifications, regulations, or laws that apply. The list shall reference the text in the DMWR/NMWR where there is a requirement for a soldering, welding, or magnetic particle inspection certification, radioactive substance, or test driver licenses.

E.5.3.8.4.7 Quality program **<quality-program>**. Any requirements for a quality program shall be listed.

Source: https://assist.dla.mil -- Downloaded: 2016-12-09T23:32Z
Check the source to verify that this is the current version before use.

E.5.3.8.4.8 In-process inspections **<inprocess>**. The following statement shall be included.

"**IN-PROCESS INSPECTIONS**

In-process quality assurance inspections are contained throughout the overhaul procedures of this DMWR. These inspections are immediately preceded by a statement such as "QA check" to identify them, and they are the minimum inspections required. Additional quality assurance inspections may be established by the depot or the commodity manager."

E.5.3.8.4.9 Acceptance inspections **<acceptance>**. The following statement shall be included.

"**ACCEPTANCE INSPECTIONS**

Items overhauled in accordance with this DMWR will be accepted based on the following criteria:

1. Conformance to quality of material requirements.
2. Conformance to all in-process quality assurance inspections.
3. Conformance to all final assembly testing requirements.
4. Conformance to the preservation, packaging, and marking requirements."

E.5.3.8.4.10 First article inspection **<first>**. When applicable, first article inspection/test shall be prepared for the DMWR/NMWR in accordance with ISO 9000 Series standards or equivalent.

E.5.3.9 Illustrated list of manufactured items **(Field level or above only) <manuwp>**. The illustrated list of manufactured items information shall be prepared as directed by acquiring activity and shall contain an introduction work package and a manufacturing procedures work package which identifies and includes technical information for each item authorized to be manufactured or fabricated by field or sustainment personnel (e.g., all "MO", "MF", "MH", and "MD" source coded items). When applicable, links may be made to fabrication instructions for tools and equipment.

E.5.3.9.1 Illustrated list of manufactured items introduction work package <**intro**>. The work package shall include the data described in 0.1 through 04.

E.5.3.9.1.1 Work package identification information **<wpidinfo>**. Work package identification information is required for this work package (refer to **Error! Reference source not found.**).

E.5.3.9.1.2 Initial setup information **<wpinfo>**. Initial setup information is not required for this work package.

E.5.3.9.1.3 Introduction for illustrated list of manufactured items work package **<intro>**. The following introduction (text below within the quotation marks) shall be prepared and included verbatim.

Source: https://assist.dla.mil -- Downloaded: 2016-12-09T23:32Z
Check the source to verify that this is the current version before use.

"**ILLUSTRATED LIST OF MANUFACTURED ITEMS**

INTRODUCTION

Scope

This work package includes complete instructions for making items authorized to be manufactured or fabricated at the (*enter applicable maintenance level*).

How to Use the Index of Manufactured Items

A part number index in alphanumeric order is provided for cross-referencing the part number of the item to be manufactured to the information which covers fabrication criteria.

Explanation of the Illustrations of Manufactured Items

All instructions needed by maintenance personnel to manufacture the item are included on the illustrations. (When applicable, a reference to the associated parts information TM or parts information work package shall be entered here.) All bulk materials needed for manufacture of an item are listed by part number or specification number in a tabular list on the illustration."

E.5.3.9.1.4 Index of manufactured items **<manuindx>**. A index of part numbers or drawing numbers shall be prepared which lists part numbers and/or drawing numbers, in alphanumeric order, along with the name of the part for all items illustrated in this work package. If applicable, the illustration figure number containing the manufacturing data shall be included.

E.5.3.9.2 Manufacturing procedures work package <**manfcprocwp**>. This work package shall contain the following information:

E.5.3.9.2.1 Work package identification information **<wpidinfo>**. Work package identification information is required for this work package (refer to 4.7.9.1).

E.5.3.9.2.2 Initial setup information **<wpinfo>**. Initial setup information is required for this work package (refer to 4.7.9.2).

E.5.3.9.2.3 Illustrations of manufactured items **<graphic>**. The following information shall be prepared:

a. As required Illustrations shall be prepared which contain sufficient views to portray all features of the item (refer to FIGURE E-10).

b. All instructions (explanatory text and list of bulk materials) needed by maintenance personnel to manufacture the item (refer to FIGURE E-10) shall supplement the illustrations and shall contain the following data.

(1) All dimensional, location, and processing instructions needed to manufacture the item shall be included (e.g., 30-in. long, top surface, primer coating).

(2) A description of the item to be manufactured, including the P/N and name.

Source: https://assist.dla.mil -- Downloaded: 2016-12-09T23:32Z
Check the source to verify that this is the current version before use.

(3) A list of bulk materials needed to manufacture the item shall be prepared. The list of bulk materials shall consist of the P/N, CAGE number and NSN, or specification number of the raw bulk material to be used in manufacture of the item and shall cite the technical characteristics (i.e., standards, specifications, conditions, dimensions, and any other pertinent data).

(4) When applicable, a link shall be made to the associated parts information (PI), parts information TM or Repair Parts List work package (for combined TMs).

E.5.3.10 Torque limits work package **(Field/Aviation Maintenance Compnay (AMC) level or above only) <torquewp>**. This work package shall be prepared as directed by acquiring activity and information prepared to provide applicable torque values **<torque>** (expressed in lb-ft or lb-in. terms), data as to bolt grade markings and their proper identification, and specific torque sequencing requirements. Refer to FIGURE E-11 for an example of the type of information presented in a torque limits work package. The torque data described in E.5.3.10.1 through E.5.3.10.4 shall be included.

E.5.3.10.1 Work package identification information **<wpidinfo>**. Work package identification information is required for this work package (refer to 4.7.9.1).

E.5.3.10.2 Initial setup information **<wpinfo>**. Initial setup information is not required for this work package.

E.5.3.10.3 Introduction **<intro>**. Information shall be prepared to include the scope or how to use the work package.

E.5.3.10.4 Torque instructions **<torqueval>**. Specific instructions such as torque limits for dry and wet fasteners, fastener sizes and thread patterns, etc., shall be prepared.

E.5.3.11 Wiring diagrams work package **(Field/Aviation Maintenance Compnay (AMC) level or above only) <wiringwp>**. This work package shall be prepared as directed by acquiring activity and include wiring and cable provisions contained in the equipment/end item, including all systems or equipment which can be installed or removed later (e.g., mission-related systems/equipment). Applicability of diagrams shall be explained in relation to equipment configuration. At a minimum, the wiring data described in E.5.3.11.1 through E.5.3.11.6 shall be included.

E.5.3.11.1 Work package identification information **<wpidinfo>**. Work package identification information is required for this work package (refer to 4.7.9.1).

E.5.3.11.2 Initial setup information **<wpinfo>**. Initial setup information is required for this work package (refer to 4.7.9.2).

E.5.3.11.3 Introduction **<intro>**. Information shall be prepared to include the scope of the work package. A statement shall be included explaining that wiring diagrams and essential wiring information are provided for all electrical and electronic systems and circuits.

E.5.3.11.4 Wire identification **<wireid>**. Identification of wires by number shall be explained. A list of circuit designators and a wire identification diagram shall be prepared.

E.5.3.11.5 Abbreviations **<abbrev>**. A statement shall be prepared that abbreviations are in accordance with ASME Y14.38, except when the abbreviation stands for a marking actually found in the equipment.

Source: https://assist.dla.mil -- Downloaded: 2016-12-09T23:32Z
Check the source to verify that this is the current version before use.

E.5.3.11.6 Wiring diagrams **<wiringdiag>**. Wiring diagrams shall be prepared for all electrical and electronic systems and circuits.

E.5.3.12 Aircraft specific maintenance work packages.

E.5.3.12.1 Preventive maintenance inspections work package **(aircraft only) <pmiwp>**. This work package shall be prepared as directed by acquiring activity and contain the requirements outlined in E.5.3.12.1.1 through E.5.3.12.1.5.

E.5.3.12.1.1 Work package identification information **<wpidinfo>**. Work package identification information is required for this work package (refer to 4.7.9.1).

E.5.3.12.1.2 Initial setup information **<wpinfo>**. Initial setup information is required for this work package (refer to 4.7.9.2).

E.5.3.12.1.3 General information and introduction **<geninfo>**. The following paragraph shall be inserted.

"**GENERAL INFORMATION**

This work package contains complete requirements for special inspections, overhaul and retirement schedule, and standards of serviceability applicable to the aircraft. The inspections prescribed in this work package shall be accomplished at specified periods by aviaiton maintenance compies, with the assistance of aivaiton support battalions when required. Complete Daily, Intermediate, Periodic, or Phased inspections are contained in the (*insert applicable aircraft inspection checklist TM*)."

E.5.3.12.1.4 Standards of serviceability. The following paragraph shall be inserted.

"Standards of serviceability to be utilized in the day-to-day inspection and maintenance of the aircraft can be found as fits, tolerances, wear limits, and specifications in the aircraft maintenance manuals. Standards of serviceability for transfer to aircraft are contained in TM 1-1500-328-23."

E.5.3.12.1.5 Special inspections.

a. Definition and general information. The following paragraph shall be inserted.

"This information supplements scheduled inspections as outlined in the applicable aircraft inspection checklists. Inspection of items which are required to be inspected at intervals not compatible with airframe operating time or airframe inspection intervals is also included. Refer to DA PAM 738-751 (Functional Users Manual for the Army Maintenance Management System-Aviation (TAMMS-A)) for applicable forms, records, and worksheets required for these inspection intervals. Typical examples of this type of inspection are as follows.

(1) Inspections which are solely contingent upon specific conditions or incidents that occur (e.g., hard landings, over speed, or sudden stoppage), wherein immediate inspection is required to ensure safe flight.

(2) Inspection of components or airframe on a calendar basis: e.g., first aid kits, weight and balance check, aircraft inventory."

Source: https://assist.dla.mil -- Downloaded: 2016-12-09T23:32Z
Check the source to verify that this is the current version before use.

b. Requirements. Components and other items which qualify under the criteria for special inspections, e.g., hard landings, sudden stoppage, over speed shall be included. These inspections shall be grouped under specific aircraft areas. A line drawing of the aircraft or accessory showing sequence for inspection by area shall be included. The area identified shall include all surfaces, materials, components, and equipment pertaining to that specific location. The following inspection data entries shall be included, as applicable. The information entries shall be placed in a table (**standard information**) **<pmi.pecul.tab>**.

(1) Aircraft serial or tail number **<serialno>**.

(2) Date of inspection **<date>**.

(3) Area number **<areano>**.

(4) Inspection number **<itemno>**.

(5) Inspection interval **<interval>**.

(6) Name of component being inspected **<compname>**.

(7) Inspection procedure **<proc>**.

E.5.3.12.2 Aircraft inventory master guide work package **(aircraft only) <inventorywp>**. This work package shall be prepared as directed by acquiring activity and information shall be prepared on standard inventory procedures to allow determination of inventoriable items of installed and loose equipment authorized and required by the specific aircraft in performance of its mission. The inventory data described in E.5.3.12.2.1 through E.5.3.12.2.6 shall be included.

E.5.3.12.2.1 Work package identification information **<wpidinfo>**. Work package identification information is required for this work package (refer to 4.7.9.1).

E.5.3.12.2.2 Initial setup information **<wpinfo>**. Initial setup information is required for this work package (refer to 4.7.9.2).

E.5.3.12.2.3 Introduction **<intro>**. A short explanation of the scope and purpose of the work package shall be prepared. Information pertaining to necessary steps to ensure the list is accurate, exact, and complete (e.g., research of authorized changes, Modification Work Orders (MWOs), additions/deletions for special mission requirements) shall be included. The introduction shall include a reference to DA PAM 738-751 for applicable forms and records.

E.5.3.12.2.4 Security **<security>**. It shall be stated here that aircraft inventory records should be unclassified but that any classification of the contents, if necessary, should be in accordance with the existing security regulations.

E.5.3.12.2.5 Inventoriable items **<inventoriable>**. The selection of inventoriable items to be listed is to be without regard to the agency (governmental or contractual) furnishing the items.

a. Items to be listed are as follows.

(1) Items essential to the execution of the designated mission of the aircraft, such as electronic, photographic, armament, special mission instruments, and safety and comfort equipment.

(2) Loose equipment delivered with the aircraft and items subject to pilferage or readily converted to personal use.

Source: https://assist.dla.mil -- Downloaded: 2016-12-09T23:32Z
Check the source to verify that this is the current version before use.

(3) Modification kits which are reissued or distributed to using organizations for installation and which are not immediately placed in use. These shall be recorded on the affected aircraft's DA Form 2408-17, Aircraft Inventory Record, and identified as loose equipment until modification is completed.

(4) Equipment required for operation in a specific environment.

b. Items to be excluded are as follows.

(1) Nonaccountable items coded as expendable in the applicable stock lists.

(2) Personal issue or items furnished on unit allowance or other authority.

(3) Items or components considered as basic or integral parts of the airframe or basic aircraft, such as engines, propellers, wheels, and standard instruments.

(4) Equipment publications, checklists, and aircraft forms.

E.5.3.12.2.6 Periods of inventory **<prdinv>**. The following text shall be included verbatim.

"**PERIODS OF INVENTORY**

Inventoriable items shall be checked against the Aircraft Inventory Record, DA Form 2408-17, at the following periods:

1. Upon receipt.

2. Prior to transfer of the aircraft to another organization.

3. Upon placing aircraft in storage and upon removal from storage. Aircraft need not be inventoried while in storage.

4. Twelve months after last inventory."

E.5.3.12.3 Storage of aircraft work package **(aircraft only) <storagewp>**. The stowage of aircraft work package(s) shall be prepared as directed by acquiring activity and information described in E.5.3.12.3.1 through E.5.3.12.3.4 shall be included.

E.5.3.12.3.1 Work package identification information **<wpidinfo>**. Work package identification information is required for this work package (refer to 4.7.9.1).

E.5.3.12.3.2 Initial setup information **<wpinfo>**. Initial setup information is required for this work package (refer to 4.7.9.2).

E.5.3.12.3.3 General information for storage of aircraft work package **<geninfo>**. The following text shall be included verbatim.

"**STORAGE OF AIRCRAFT**

GENERAL INFORMATION

Components Involved in an Accident

Any component removed for reason of accident shall not be preserved, but shall be shipped in the same condition it was in after the accident.

Categories of Storage

1. Flyable storage - no time limit.

2. Short term (administrative storage) - 1 to 45 days.

Source: https://assist.dla.mil -- Downloaded: 2016-12-09T23:32Z
Check the source to verify that this is the current version before use.

3. Intermediate storage - 46 to 180 days."

E.5.3.12.3.4 Flyable storage **<flyable>**, short term storage **<short>**, and intermediate storage **<intermediate>**.

a. A general discussion shall be prepared for each category of aircraft storage, to include considerations for selection of the appropriate category (e.g., ground operation, motoring of engines, and other required maintenance for which personnel and materials are needed) and steps to be taken for care of the aircraft during exceptionally wet weather.
b. All essential information for each category of aircraft storage shall be prepared to include all procedures for preparing the complete aircraft for storage and removal from storage, excluding any information on when or why the aircraft are stored. Each category of storage shall make reference to inspection documents and inspection procedures to be conducted before, during, and after storage.

E.5.3.12.4 Weighing and loading work package **(ASB only) <wtloadwp>**. The weighing and loading work package(s) shall be prepared and provide description, information, and procedures for aircraft weighing, balancing, and loading. The data described in E.5.3.12.4.1 through E.5.3.12.4.5 shall be included.

E.5.3.12.4.1 Work package identification information **<wpidinfo>**. Work package identification information is required for this work package (refer to 4.7.9.1).

E.5.3.12.4.2 Initial setup information **<wpinfo>**. Initial setup information is required for this work package (refer to 4.7.9.2).

E.5.3.12.4.3 General information **<geninfo>**. The following text shall be included verbatim.

"**WEIGHING AND LOADING ASB**

GENERAL INFORMATION

Scope

This work package contains description, information, and procedures for aircraft weighing and loading. This information replaces the Chart E (Loading Data and Special Weighing Instructions) placed in the individual aircraft weight and balance files by the aircraft manufacturer. Chart E in the aircraft file will no longer be required."

E.5.3.12.4.4 Weighing information **<formchart>**. Instructions for preparing the aircraft, weighing the aircraft in the basic weight condition, performing calculations, and using and recording data on DD Form 365-1 (Basic Weight Checklist) and DD Form 365-2 (Aircraft Weighing Record) shall be included. Instructions shall include setup requirements, procedures for positioning the aircraft in the weighing area, and assembly of the aircraft weighing equipment. Illustrations shall be prepared to support the text, including a two view chart diagram (refer to FIGURE E-13). A reference may be made to TM 55-1500-342-23 for additional information governing weight and balance of aircraft, forms, and records.

Source: https://assist.dla.mil -- Downloaded: 2016-12-09T23:32Z
Check the source to verify that this is the current version before use.

E.5.3.12.4.5 Loading information <**weightinst**>. Descriptions and instructions shall be prepared for aircraft loading, and computing weight and balance information. Sufficient information and data shall be provided so that an aviator, knowing the basic weight and moment of the aircraft, can compute any combination of weight and balance using the prescribed charts and forms. Reference shall be made to AR-95-1 (Aviation: General Provisions, Training, Standardization, and Resource Management), DA PAM 738-751 and TM 55-1500-342-23 for additional information governing weight and balance of aircraft, forms, and records. Data shall include fundamental principles of loading. An illustration of aircraft compartments and stations shall be included. Reference shall be made to DD Form 365-1 for a more complete listing of compartments and equipment that comprise the basic weight of the aircraft. Loading information shall include weight and balance characteristics, center of gravity limits, weight / balance and loading, and weight and moment tables for load items such as crew, fuel, cargo, and armament.

E.5.3.13 Auxiliary equipment maintenance work package <**auxeqpwp**>. When auxiliary equipment (e.g., Modified Tables of Organization and Equipment (MTOE) items, etc.) maintenance TMs or maintenance requirements cards are not procured for peculiar equipment furnished by the contractor, maintenance instructions shall be prepared.

E.5.3.13.1 Work package identification information <**wpidinfo**>. Work package identification information is required for this work package (refer to 4.7.9.1).

E.5.3.13.2 Initial setup information <**wpinfo**>. Initial setup information is required for this work package (refer to 4.7.9.2).

E.5.3.13.3 Auxiliary equipment procedures <**maintsk**>/<**proc**>. Concise step-by-step procedures shall be prepared for proper care of auxiliary equipment while in and out of service. These procedures shall include instructions for storage, preventive maintenance, lubrication, operating checks, and adjustments, as applicable. Maintenance instructions <**maintsk**> (refer to E.5.3.5.3) shall also be included, as applicable, for special tools that have been fabricated (refer to E.5.3.9).

E.5.3.14 Ammunition specific work package.

E.5.3.14.1 Ammunition maintenance work package <**ammowp**>. This work package shall be prepared as directed by acquiring activity and reference or contain the following:

E.5.3.14.1.1 Work package identification information <**wpidinfo**>. Work package identification information is required for this work package (refer to 4.7.9.1).

E.5.3.14.1.2 Initial setup information <**wpinfo**>. Initial setup information is required for this work package (refer to 4.7.9.2).

E.5.3.14.1.3 Care and handling <**ammo.handling**>. All procedures required for care and handling of ammunition, including hazard distances, storage, special requirements, prevention of deterioration due to rough handling, exposure to adverse weather conditions or other hazards. Visual inspection criteria shall be prepared to determine item serviceability.

E.5.3.14.1.4 Defective <**ammo.defect**>. Procedures shall be prepared for disposition of defective ammunition.

E.5.3.14.1.5 Cleaning and painting <**service**>. Use of cleaning materials and paint authorized for use in the specified maintenance operations.

Source: https://assist.dla.mil -- Downloaded: 2016-12-09T23:32Z
Check the source to verify that this is the current version before use.

E.5.3.14.2 Ammunition marking information work package **<ammo.markingwp>**. This work package shall be prepared as directed by acquiring activity and shall provide applicable information on ammunition marking **<ammo.markings>**, classification, identification **<ammotype>**, care and handling **<ammo.handling>**, preservation, transportation, authorized rounds, preparation for firing, fuzes, and packing **<ammo.packing>**. Reusable original packaging and containers shall be identified for return or temporary storage of ammunition in its original configuration. Information on classifying, identifying, caring for, handling, etc., non-ammunition Class V items shall be prepared, when applicable. Individual paragraphs shall be prepared for each ammunition type/classification.

a. Work package identification information **<wpidinfo>** is required for this work package (refer to 4.7.9.1).
b. Initial setup information **<wpinfo>** is required for this work package (refer to 4.7.9.2).

E.5.3.14.3 Foreign ammunition **(NATO) work package <natowp>**. A work package to describe foreign ammunition shall be prepared when applicable. The requirements of E.5.3.14.2 shall apply.

a. Work package identification information is required for this work package (refer to 4.7.9.1).
b. Initial setup information is required for this work package (refer to 4.7.9.2).

E.5.3.15 Preventive maintenance services/Preventive maintenance daily inspection work packages **(aircraft preventive maintenance services/preventive maintenance daily only) <pms-inspecwp>**. A work package shall be developed for each specific inspection interval (i.e., daily, intermediate, periodic, 10 hour/14 day, 30 hr/42day, etc.), as applicable to the aircraft. Inspection checklists shall be divided by areas of the aircraft (i.e., nose, fuselage, tail, etc.). All items requiring inspection shall be listed in the logical sequence of inspection that would require a minimum of time and motion on the part of the individual performing the inspection. The checklist data shall be formatted and delivered to support the inspection requirements in DA PAM 738-751 as prescribed by the acquiring activity.

E.5.3.15.1 Work package identification information **<wpidinfo>**. Work package identification information is required for this work package (refer to 4.7.9.1).

E.5.3.15.2 Initial setup information **<wpinfo>**. Initial setup information is required for this work package (refer to 4.7.9.2).

E.5.3.15.3 Actuation warning. The following warning shall appear prior to first step of procedure:

WARNING

Accidental actuation of aircraft power plant or hydraulic system, or (*insert aircraft specific equipment as applicable, i.e., firing of armament, jettison ballistics*) may cause severe injury or death, Before starting inspection, aircraft safety check must be performed, if applicable IAW (*insert specific technical manual here) (if applicable the following statement may be inserted here "and all armament must be safetied, deactivated, and cleared (insert technical manuals here)"*).

Source: https://assist.dla.mil -- Downloaded: 2016-12-09T23:32Z
Check the source to verify that this is the current version before use.

E.5.3.15.4 Mandatory safety-of-flight inspection items. Mandatory safety-of-flight inspection items shall be highlighted. Mandatory safety of flight inspection items shall have WARNING on the WARNING SUMMARY page at the front of the manual. The WARNING shall be verbatim as follows:

"**FSCAP WARNING**

Certain inspections are mandatory Safety of Flight requirements, and the inspection intervals cannot be exceeded. In the event these inspections cannot be accomplished at the specified interval, the aircraft condition status symbol will be immediatly changed to a red X."

E.5.3.15.5 Area diagram. Area diagram of the aircraft, showing sequences for inspection by area shall be included. The area identified shall include all surfaces, material, components and equipment pertaining to that specific location (refer to FIGURE 15 (PMD) and FIGURE E-15A (PMS)).

E.5.3.15.6 Standard checklists. If applicable, the standard inspection checklist shall be further divided into Power Off checks and Power On checks.

a. The following statement shall be the first item for each aircraft and shall read: “Inspect aircraft forms and records for recorded discrepancies (DA PAM 738-751, Functional Users Manual for the Army Maintenance Management System Aviation (TAMMS-A)).”
b. The work packages shall be divided into the proper sequence of steps as outlined in the area diagrams. For PMD manuals, there shall be one work package for each inspection area.

c. The following statement will be the final procedure of the checklist: "Inspect for foreign object damage and ensure all access panels or doors opened or removed for this inspection are closed or reinstalled."

E.5.3.16 Phased maintenance inspection work package **(aircraft phased maintenance checklist only) <pmi-cklistwp>**. Phased maintenance inspection data shall be prepared and include the information described in E.5.3.16.1 through E.5.3.16.74.

E.5.3.16.1 Work package identification information **<wpidinfo>**. Work package identification information is required for this work package (refer to 4.7.9.1).

E.5.3.16.2 Initial setup information **<wpinfo>**. Initial setup information is required for this work package (refer to 4.7.9.2).

E.5.3.16.3 Inspection area diagrams **<figure>**. Diagrams locating the inspection areas and the access doors and panels which require removal at various phased maintenance inspections of the aircraft shall be included (refer to FIGURE E-16 and FIGURE E-17).

E.5.3.16.4 Phased maintenance checklist. The following information shall be developed for the phased maintenance checklist. . The inspection data shall be formatted and presented to support the inspection requirements in DA PAM 738-751 as prescribed by the acquiring activity. The work package shall begin with the following note:

Source: https://assist.dla.mil -- Downloaded: 2016-12-09T23:32Z
Check the source to verify that this is the current version before use.

"**NOTE**

Prior to start of the Phased Maintenance Inspection, it is recommended that a pre-inspection maintenance test flight (MTF) be conducted. Accomplishment of the MTF shall be determined by the field maintenance officer. The pre-inspection MTF should be conducted by a maintenance test pilot following a review of the aircraft forms and records and a briefing from the crew of the aircraft. The MTF is recommended to assess the aircraft performance and identify deficiencies that should be corrected while the aircraft is undergoing phased maintenance inspections."

E.5.3.16.5 DELETED.

E.5.3.16.6 DELETED.

E.5.3.16.7 DELETED.

E.6 NOTES.

The notes in section 6 apply to this appendix.

Source: https://assist.dla.mil -- Downloaded: 2016-12-09T23:32Z
Check the source to verify that this is the current version before use.

0109

FIELD MAINTENANCE
SERVICE UPON RECEIPT

INITIAL SETUIP:

Tools and Special Tools
Measuring Tape (WP 0240, Item 3)

References
WP 0125

References (cont.)
WP 0128
SF 361, Transportation Discrepancy Report

Checking Unpacked Equipment

Inspect the equipment for damage incurred during shipment.
If the equipment has been damaged, report the damage on SF 361, Transportation Discrepancy Report.
Check the equipment against the packing slip to see if the shipment is complete. report all discrepancies in accordance with applicable service instructions (e.g., for Army instructions see DA PAM 750-8).
Check to see whether the equipment has been modified.

Table 1. Inspection Criteria for Packaging

COMPONENT	ACCEPTABLE	REPARABLE	NONREPARABLE
Wooden Boxes and Crates			
Hardware	Operative and tight. Nails, screws, and Fasteners.	Inoperative or loose. Nails, screws, and fasteners.	None. None.
Ends	Free form damage.	Broken or missing cleats and handles.	Damage that requires disassembly of box.
Wood	Splits less than 3 inches long, no closer than 1 inch to edge of board or adjoining split. The board must be secured by at least one nail on each side of the split when it extends to the end of the board.	Splits more than 3 inches but nom closer than 1 inch to edge of board or adjoining split, or 1/2-inch wide. That can be repaired by use of corrugated fasteners.	Splits closer than 1 inch to edge of board or adjoining split or over 1/2-inch wide.
Fiber Containers			
Metal Ends	Minor rust, cracks, indentations, or splits that would not impair water proofing or serviceability of container.	None.	Perforations, excessive rust, or ends which are crushed or not securely crimped to body.
Body and Cap	No leaks, cuts, or gouges.	Cuts, tears, gouges not closer than 1 inch to closure, less than 1/2 square inch in area, and unpenetrated layers that can be spot painted.	Cuts, tears, or gouges closer than 1 inch to closure, more than 1/2 square inch in area, or through all impregnated layers.

0109-1

FIGURE E-1. Example of checking unpacked equipment table.

Source: https://assist.dla.mil -- Downloaded: 2016-12-09T23:32Z
Check the source to verify that this is the current version before use.

CHECKING UNPACKED EQUIPMENT– CONTINUED

Table 2. M29 and M30 Control Surfaces and Containers.

LOCATION	ITEM	ACTION	REMARKS
Container	Components	1. Inspect for rust, fungus, paint damage, and deformation.	WP 0125
		2. Reject container if damage prevents it from functioning properly.	–
M29	Control Surfaces	1. Inspect for dents and scratches on post, trailing edge phenolic, skin, and closure plate.	WP 0128
		2. Reject control surface: a. If post dents or scratches exceed 0.002 in. (0.051 mm). b. If trailing edge phenolic dents exceed 0.040 in. (10.160 mm). c. If skin dents exceed 0.030 in. (7.620 mm) within 2 in. (50.800 mm) of post. d. If closure plate dents exceed 0.030 in. (7.620 mm) within 2 in. (50.800 mm) of post.	–
M30	Control Surfaces	1. Inspect for dents and scratches on post and skin.	–
		2. Skin dents or scratches up to 0.050 in. (12.700 mm) are allowable, but should be blended.	–
		3. Reject control surface if post dents or scratches exceed 0.002 in. (0.051 mm).	–

END OF TASK

END OF WORK PACKAGE

FIGURE E-1. Example of checking unpacked equipment table - continued.

Source: https://assist.dla.mil -- Downloaded: 2016-12-09T23:32Z
Check the source to verify that this is the current version before use.

Table 1 Preventive Maintenance Checks and Services for Model M2A3/M3A3, Before –Continue

ITEM NO.	INTERVAL	ITEM TO BE CHECKED OR SERVICED	PROCEDURE	EQUIPMENT NOT READY/ AVAILABLE IF:
			WARNING **Hydraulic fluid is poisonous and can be absorbed through your skin. Never service hydraulic system when fluid is hot or under pressure. Avoid skin contact. Wash hands with soap immediately after servicing, and wash off any fluid which comes in contact with skin. If fluid gets into eyes, wash eyes immediately and get medical help.** b. Check ramp hydraulic power unit. 1. Lower ramp (WP 0090). 2. Remove ramp hydraulic power unit cover and check sight glass. If fluid level is below ADD mark, add FRH (MIL-H-46170) as needed. Never fill over halfway between ADD and FULL with ramp down. Ramp hydraulic power unit will be overfilled with ramp up. 3. Install ramp hydraulic power unit cover. 4. Raise ramp (WP 0090).	
6	Before	Hull Drain Plugs	**Driver** a. Check for open or missing front hull drain plug and that bridge plates are fully seated.	Front hull drain plug is missing or bridge plates will not seat.
7	Before	Internal Fire Extinguisher	**Driver** a. Check engine compartment fire extinguisher. 1. Check wire or lead seals on engine compartment fire extinguisher. 2. Check that pressure gage on engine compartment fire extinguisher is in green or yellow zone. **NOTE** **If engine compartment fire extinguisher is in yellow zone, notify unit maintenance after mission is completed.**	Wire or lead seals on engine compartment fire extinguisher are missing, broken or improperly laced. Pressure gage on engine compartment fire extinguisher reads in red zone.

FIGURE E-2. Example of a PMCS table.

Source: https://assist.dla.mil -- Downloaded: 2016-12-09T23:32Z
Check the source to verify that this is the current version before use.

Table 1. PMCS Mandatory Replacement Parts List (AO/A1)

ITEM NO.	PART NUMBER (CAGEC)	NSN	NOMENCLATURE	QTY
SEMI-ANNUAL (1500 MILE)				
1	D5-19-2353 (42765)	4240-01-026-3112	PRECLEANER AND PART (A1 ONLY)	01
2	MS24665-285 (42765)	5315-01-061-2060	PIN, COTTER	01
3	MS35333-42 (42765)	5310-00-595-7237	WASHER, LOCK	03
4	MS35338-43 (42765)	5310-00-045-3296	WASHER, LOCK	01
5	MS35338-44 (42765)	5310-00-582-5965	WASHER, LOCK	16
6	MS35338-46 (42765)	5310-00-004-5033	WASHER, LOCK	09
7	MS51922-1 (42765)	5310-00-088-1251	NUT, SELF-LOCKING	04
8	MS51922-17 (42765)	5310-00-087-4652	NUT, SELF LOCKING	17
9	11628247 (42765)	5330-01-109-1925	GASKET	02
10	12294872 (42765)	5310-01-107-3356	WASHER, FLAT	02
11	2585163-57 (42765)	5306-00-163-2850	BOLT, SELF-LOCKING	01
ANNUAL (3000 MILE)				
1	D5-19-2353 (42765)	4240-01-026-3112	PRECLEANER AND PART (A1 ONLY)	01
2	MS24665-283 (42765)	5315-00-842-3044	PIN, COTTER	02
3	MS24665-285 (42765)	5315-01-061-2060	PIN, COTTER	01
4	MS35333-42 (42765)	5310-00-595-7237	WASHER, LOCK	03
5	MS35338-43 (42765)	5310-00-045-3296	WASHER, LOCK	01
6	MS35338-44 (42765)	5310-00-582-5965	WASHER, LOCK	16
7	MS35338-46 (42765)	5310-00-004-5033	WASHER, LOCK	09
8	MS51922-1 (42765)	5310-00-088-1251	NUT, SELF-LOCKING	08

FIGURE E-3. Example of a PMCS mandatory replacement parts list.

Source: https://assist.dla.mil -- Downloaded: 2016-12-09T23:32Z
Check the source to verify that this is the current version before use.

Table 2. Requirements for XXX System

System	MTB	MT	Ao
Track	500	30	0.8
Engine	70	43	0.9
Hull	1,000	80	0.8
Radio	400	10	0.9
Night Sight	145	10	0.8
Gun	10,000	45	0.9

Table 3. Maintenance Radio for XXX System 0.35

Field	Below Depot	Depot
0.05	0.08	0.07

EXAMPLE OF TABULAR RAM DATA

Requirements for XXX System

Maintainability
When maintenance procedures shown in the technical manuals are followed, the mature maintainability data are as follows:

1. Mean Operator Preventive Maintenance Time shall not exceed 0.25 man-hours per mission. This time shall not be included in field preventive maintenance time.

- Maximum operator Corrective Maintenance Time shall not exceed 1.00 man-hours per mission without being classified as a mission failure.
- The ratio of total corrective and field preventive maintenance man-hours to operating hours shall not exceed 0.10.
- The ratio of total field preventive maintenance man-hours to total operating hours shall not exceed 0.04.
- The ratio of total corrective maintenance man-hours to operating hours shall not exceed 0.06.
- Mean man-hours to perform a corrective maintenance action shall not exceed 2.5.
- The Mean Time Between Corrective Maintenance Actions shall not be less than 150 operating hours.
- The engine shall have an 80 percent probability of not requiring replacement in 20,000 miles of operation.
- The gun tube shall have an 80 percent probability of not requiring replacement in 50,000 rounds of operation.
- The truck shall have a 92 percent probability of not requiring replacement in 5,450 miles of operation.

EXAMPLE OF NARRATIVE RAM DATA

FIGURE E-4. Example of tabular and narrative reliability, availability, and maintainability data.

Source: https://assist.dla.mil -- Downloaded: 2016-12-09T23:32Z
Check the source to verify that this is the current version before use.

0280

DEPOT MAINTENANCE

SPUR GEAR FOR
OVERHAUL INSPECTION PROCEDURES

INITIAL SETUP:

References
WP 0052

Table 1 Overhaul Inspection Procedures for Spur Gear (Item 5, fig 4).

QA REQ	NO.	REF LTR	CHARACTERISTIC	INSP METHOD	REQUISITE
NO	1		Serviceability	Visual/measure	Examine for nicks, gouges, burrs, and corrosion, identified below repair damaged areas, 0.020 inch (0.508mm) or less deep, by blending.
YES	2		Metal fatigue	Magnetic particle inspection	No fractures or cracks.
YES	3	A	Tooth wear	Visual	No pitting, scuffing, scoring, metal flow, or wear steps allowed.
YES	4	B	Journal wear	Measure	Minimum diameter, 0.9841 inch (24.99mm). Repair (WP 0052).

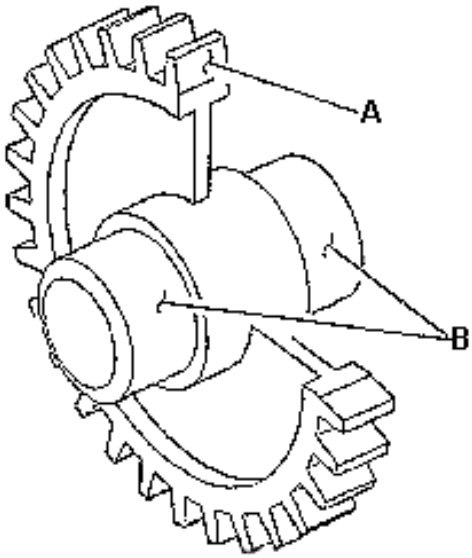

Figure 1. Spur Gear.

END OF WORK PACKAGE

FIGURE E-5. Example of an OIP table.

Source: https://assist.dla.mil -- Downloaded: 2016-12-09T23:32Z
Check the source to verify that this is the current version before use.

TEST AND INSPECTION –CONTINUED

Table 1. Classification of Materiel Defects.

CATEGORIES OF DEFECTS/COMPONENTS AND DEFECTS	WP NO. OR TM WITH CORRECTIVE ACTION	INSPECTION METHODS AFTER CORRECTIVE ACTION	ACCEPTABLE QUALITY LEVEL
CRITICAL:			
1. Fuze not set on SAFE	WP 0120	Visual	Fuze set on SAFE.
2. Fuze well liner missing	WP 0120	Visual	Fuze well liner in place.
MINOR:			
1. Fuze stake missing.	WP 0120	Visual	Fuze stake replaced.
2. Supplementary charge spacer missing.	WP 0120	Visual	Supplementary charge spacer replaced.
3. Supplementary charge damaged.	WP 0120	Visual	Supplementary charge replaced.
4. Explosive on fuze well threads.	WP 0120	Visual	Fuze well threads without caked explosive.
5. Shear or twist pin above flush.	WP 0120	Visual	Shear or twist pin flush.

END OF TASK

END OF WORK PACKAGE

FIGURE E-6. Example of a classification of material defect table.

Source: https://assist.dla.mil -- Downloaded: 2016-12-09T23:32Z
Check the source to verify that this is the current version before use.

OVERHAUL AND RETIREMENT SCHEDULE –CONTINUED

Table 1. Overhaul and Retirement Schedule

PART NAME	PART NUMBER/ CAGEC	OVERHAUL INTERVAL HOURS	OVERHAUL INTERVAL NOTES	RETIREMENT INTERVAL HOURS	RETIREMENT INTERVAL NOTES
*Clutch Assembly	7–311310003 (02771)	1,000		4,500	
	7–31131003–3 (02771)	1,000		14,500	
	7–31131003–7 (02771)	1,000		14,500	
	7–31131003–9 (02771)	1,000		14,500	
Main Rotor Drive Shaft	7–211350021 (02781)			5,400	1
	7–211350021–3 (02781)			5,400	1
Main Rotor Drive Plat	7–211310098–5 (02771)			5,400	
	7–211310098–7 (02771)			5,400	
	7–211310098–9 (02771)			5,400	
	7–211310098–11 (02771)			5,400	
Nose Gearbox Assembly, LH	7–311320001–3 (02831)			4,500	
	7–311320001–5 (02831)			4,500	
Quill Shaft Assembly	7–211320093 (02731)			4,500	
Nose Gearbox Assembly, RH	7–311320001–4 (02731)			4,500	
	7–311320001–6 (02731)			4,500	

END OF TASK

END OF WORK PACKAGE

FIGURE E-7. Example of an overhaul and retirement schedules.

Source: https://assist.dla.mil -- Downloaded: 2016-12-09T23:32Z
Check the source to verify that this is the current version before use.

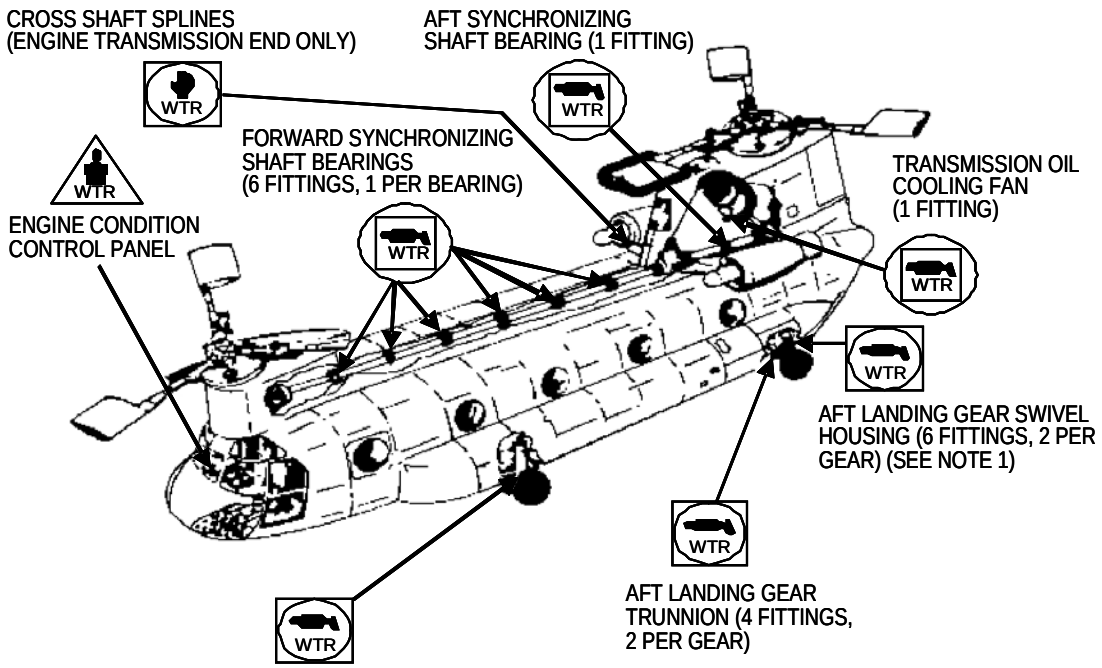

NOTES

1. CODE C AND D, X.1, AND 63.7900 THRU 63-7921 WITHOUT HIGH FLOATATION LANDING GEAR HAVE 4 FITTINGS (2 PER GEAR).
2. LUBRICATION INTERVAL SHOWN IS FOR AVERAGE CONDITIONS. MORE FREQUENT LUBRICATION MAY BE NECESSARY UNDER EXTREMELY DUSTY CONDITIONS.

TABLE OF LUBRICANTS		
IDENTI-FICATION LETTER	SPECIFICATION	TYPE OF LUBRICANT
WTR	MJL-G-813228 (C221)	GREASE, AIRCRAFT, GENERAL PURPOSE, WIDE TEMPERATURE RANGE

SYMBOLS	FREQUENCY	METHOD OF APPLICATION
□	25 Hours	GREASE GUN
○	100 Hours	BRUSH
△	500 Hours	HAND

FIGURE E-8. Example of a lubrication chart.

Source: https://assist.dla.mil -- Downloaded: 2016-12-09T23:32Z
Check the source to verify that this is the current version before use.

Table 1. MOBILIZATION REQUIREMENTS

WORK PACKAGE	ACTION
WP 0088	Materials and Fabrication, Step 6. Add "Depending on the urgency of requirements, availability of materials, and fabrication lead time, provisions of this work package may be relaxed. When that occurs, any practical method may be used to inscribe or attach the data to the equipment, i.e., decals."
WP 0090	Cleaning, Step 3. Add "Clean only to the extent necessary to perform preshop analysis."
WP 0092	Cleaning, Step 8. Add "Clean only to the extent necessary to inspect components."
WP 0098	Painting, Step 3. Add "Painted surfaces will be treated for corrosion and scratches that expose bare metal. Touch-up painting need not correlate in hue and gloss."
WP 0099	Delete

END OF WORK PACKAGE

FIGURE E-9. Example of depot mobilization requirements.

Source: https://assist.dla.mil -- Downloaded: 2016-12-09T23:32Z
Check the source to verify that this is the current version before use.

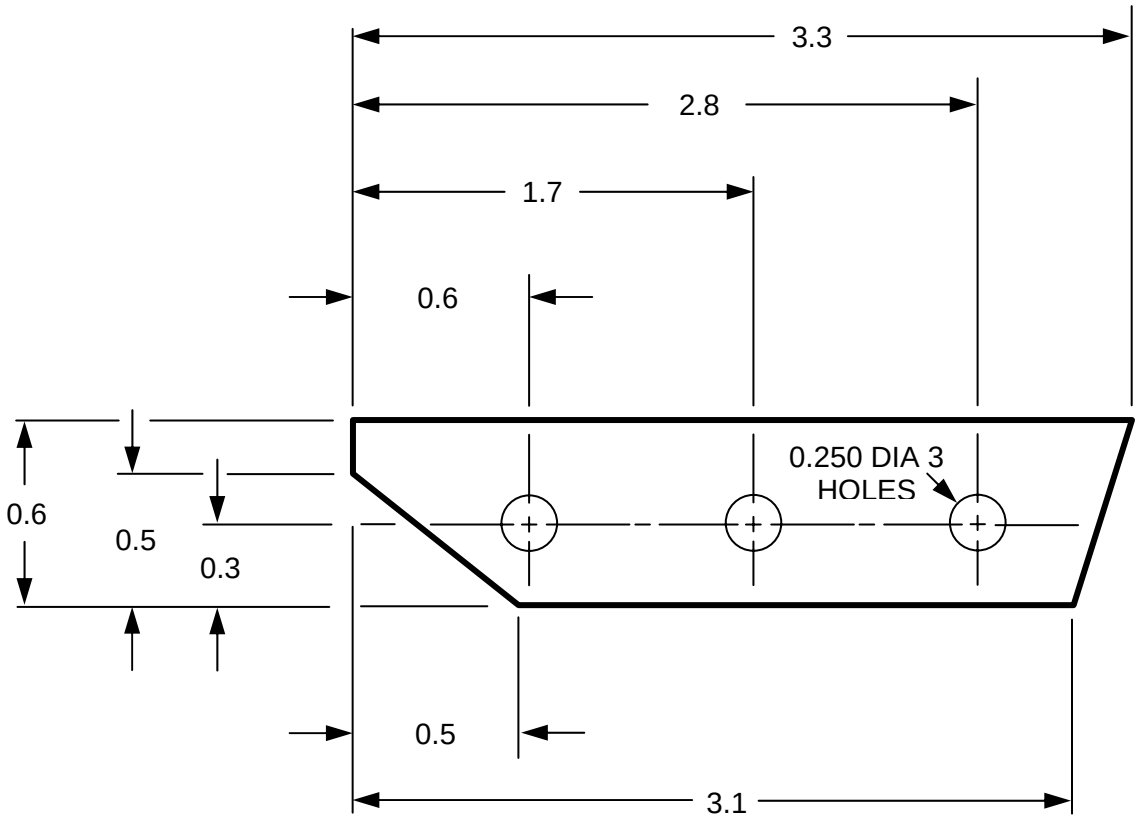

NOTES:

SHIM, BLADE-MAKE FROM AL-ALY SHEET 2024-T3, 0.016 THICK, QQ-A-250/5, NSN 6635-00-232-0543

FINISH-CHEMICALLY FILM TREAT PER MIC-C-5541 CLASS 1a

ALL DIMENSIONS ARE IN INCHES

Shim, Blade P/N 366-83019-5

FIGURE E-10. Example of an illustrated list of manufactured items.

Source: https://assist.dla.mil -- Downloaded: 2016-12-09T23:32Z
Check the source to verify that this is the current version before use.

0321

SUSTAINMENT MAINTENANCE
TORQUE LIMITS

TORQUE TABLES

How To Use Torque Tables

1. Measure the diameter of the screw you are installing.

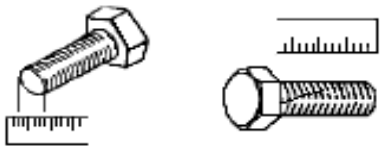

Figure 1. Measuring Screw.

2. Count the number of threads per inch or use a pitch grade.
3. Under the heading SIZE, look down the left-hand column until you find the diameter of the screw you are installing. (There will usually be two lines beginning with the same size).
4. In the second column under SIZE, find the numbers of threads per inch that matches the number of threads you counted in Step 2. (Not required for metric screws.)

Figure 2. Capscrew Head Markings .

NOTE

Manufacture's mark may vary. Standard are all SAE Grade 5 (3-Line). Metric screws are of three grades: 8.8, 10.9, and 12.9 Grades and manufacturer's marks appear on the screw head.

5. To Find the grade screw you are installing, match the markings on the head to the correct picture of Capscrew Head Markings in Figure 2 preceding the torque table.

END OF WORK PACKAGE

0321-1

FIGURE E-11. Example of torque limits data.

Source: https://assist.dla.mil -- Downloaded: 2016-12-09T23:32Z
Check the source to verify that this is the current version before use.

FIGURE E-12. DELETED.

Source: https://assist.dla.mil -- Downloaded: 2016-12-09T23:32Z
Check the source to verify that this is the current version before use.

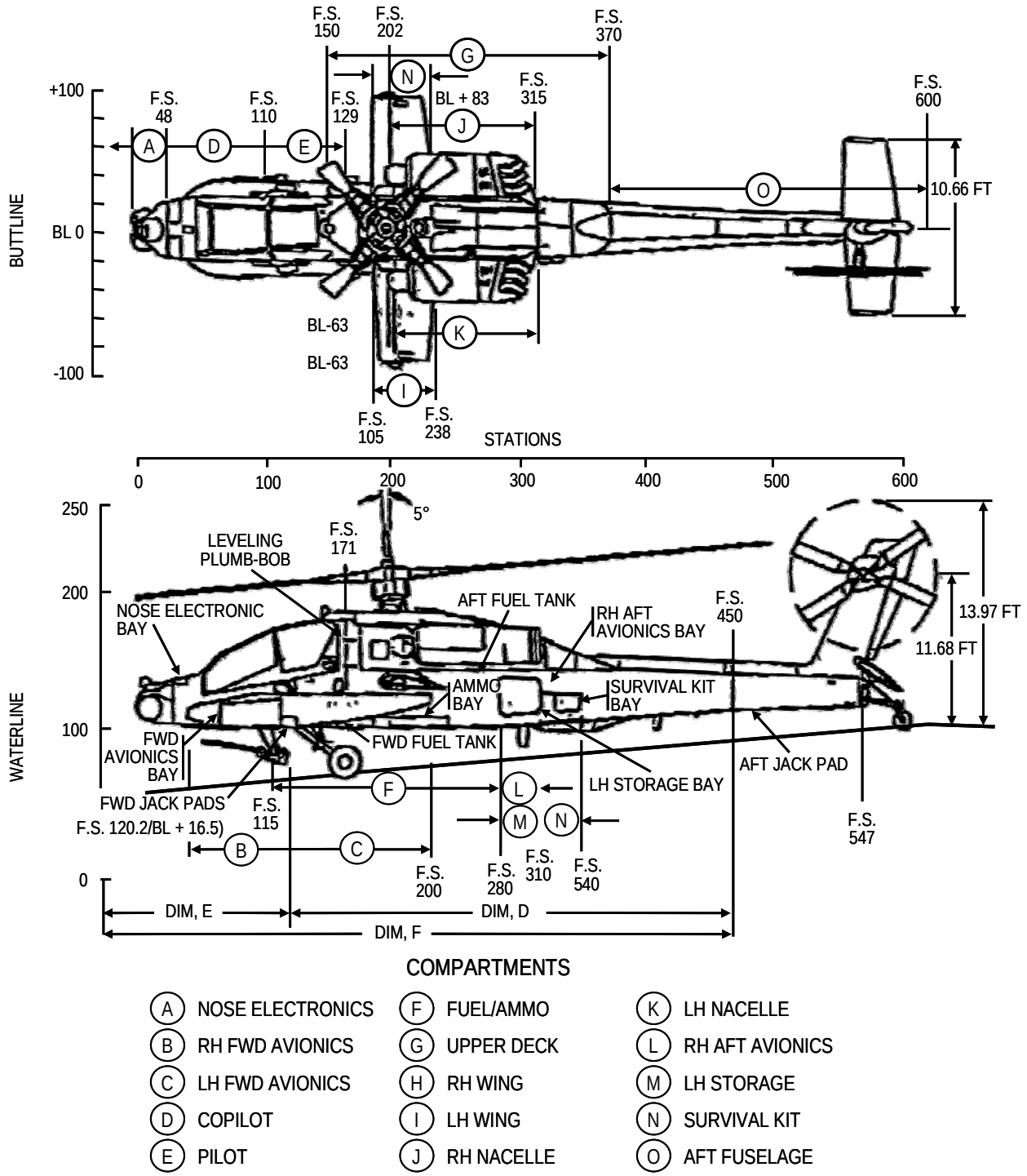

FIGURE E-13. Example of two chart diagram.

Source: https://assist.dla.mil -- Downloaded: 2016-12-09T23:32Z
Check the source to verify that this is the current version before use.

FIGURE E-14. DELETED.

Source: https://assist.dla.mil -- Downloaded: 2016-12-09T23:32Z
Check the source to verify that this is the current version before use.

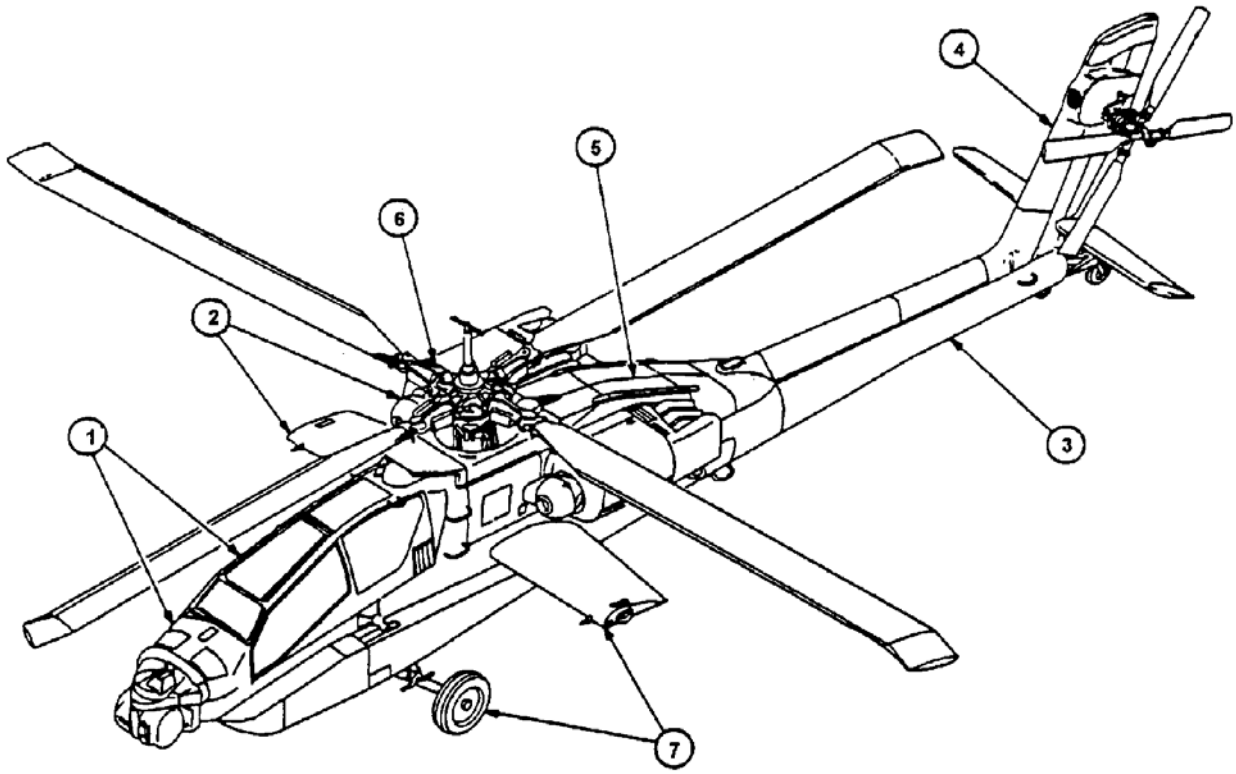

AREA NO. 1	CANOPY, CREW STATION, AVIONICS COMPARTMENTS, FOWARD FUSELAGE
AREA NO. 2	RIGHT FUSELAGE, WING, PYLONS, RIGHT MAIN LANDING GEAR, NO. 2 ENGINE AND NACELLE, BATTERY COMPARTMENT
AREA NO. 3	AFT FUSELAGE, TAIL ROTOR DRIVE AND CONTROLS
AREA NO. 4	STABILIZER, STABILATOR,TAIL WHEEL, TAIL ROTOR DRIVES AND CONTROLS
AREA NO. 5	AFT EQUIPMENT BAY (ALL EQUIPMENT)
AREA NO. 6	MAIN ROTOR AND CONTROLS
AREA NO. 7	LEFT FUSELAGE WING, PYLONS, LEFT MAIN LANDING GEAR, NO. 1 ENGINE AND NACELLE AMMO COMPARTMENT

FIGURE E-15. Example of an area diagram for PMD.

Source: https://assist.dla.mil -- Downloaded: 2016-12-09T23:32Z
Check the source to verify that this is the current version before use.

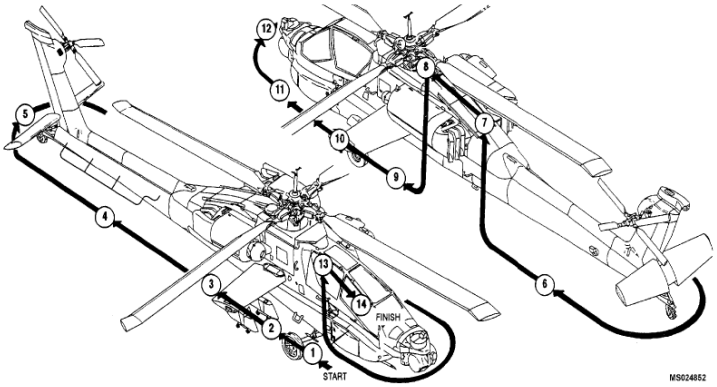

Figure 1. Area Diagram

TM 1-1520-238-PMS

AREA NO. 1	**WP 0002**	Fuselage - Right Side Forward	All surfaces, components, and equipment in forward avionics bay. Includes landing gear and search light.
AREA NO. 2	**WP 0003**	Fuselage - Right Side Center	All surfaces, components, and equipment aft of crew station to engine nacelle. Includes transmission deck, right nose gearbox, engine installation components, wing and stores.
AREA NO. 3	**WP 0004**	Engine Nacelle - Right	All surfaces, components, and equipment aft of APU exhaust duct. Includes lower nacelle, aft electronics compartment, and IR suppressor.
AREA NO. 4	**WP 0005**	Fuselage - Right Side Aft	All surfaces, components, and equipment aft of APU exhaust duct and forward of intermediate gearbox. Includes hydraulic ground service panel and aft horizontal tail rotor drive shaft.
AREA NO. 5	**WP 0006**	Tail Section	All surfaces, components, and equipment aft of tailboom area. Includes horizontal stabilator, tail landing gear, intermediate and tail rotor gearboxes, aft vertical tail rotor drive shaft, and tail rotor.
AREA NO. 6	**WP 0007**	Fuselage - Left Side Aft	All surfaces, components, and equipment forward of intermediate gearbox and aft of ENCU exhaust duct.
AREA NO. 7	**WP 0008**	Catwalk	All surfaces, components, and equipment in catwalk area. Includes shaft-driven compressor, forward tail rotor drive shaft, fire extinguisher containers, environmental control unit (ENCU), and APU.

iii

FIGURE E-15A. Example of an area diagram for PMS.

Source: https://assist.dla.mil -- Downloaded: 2016-12-09T23:32Z
Check the source to verify that this is the current version before use.

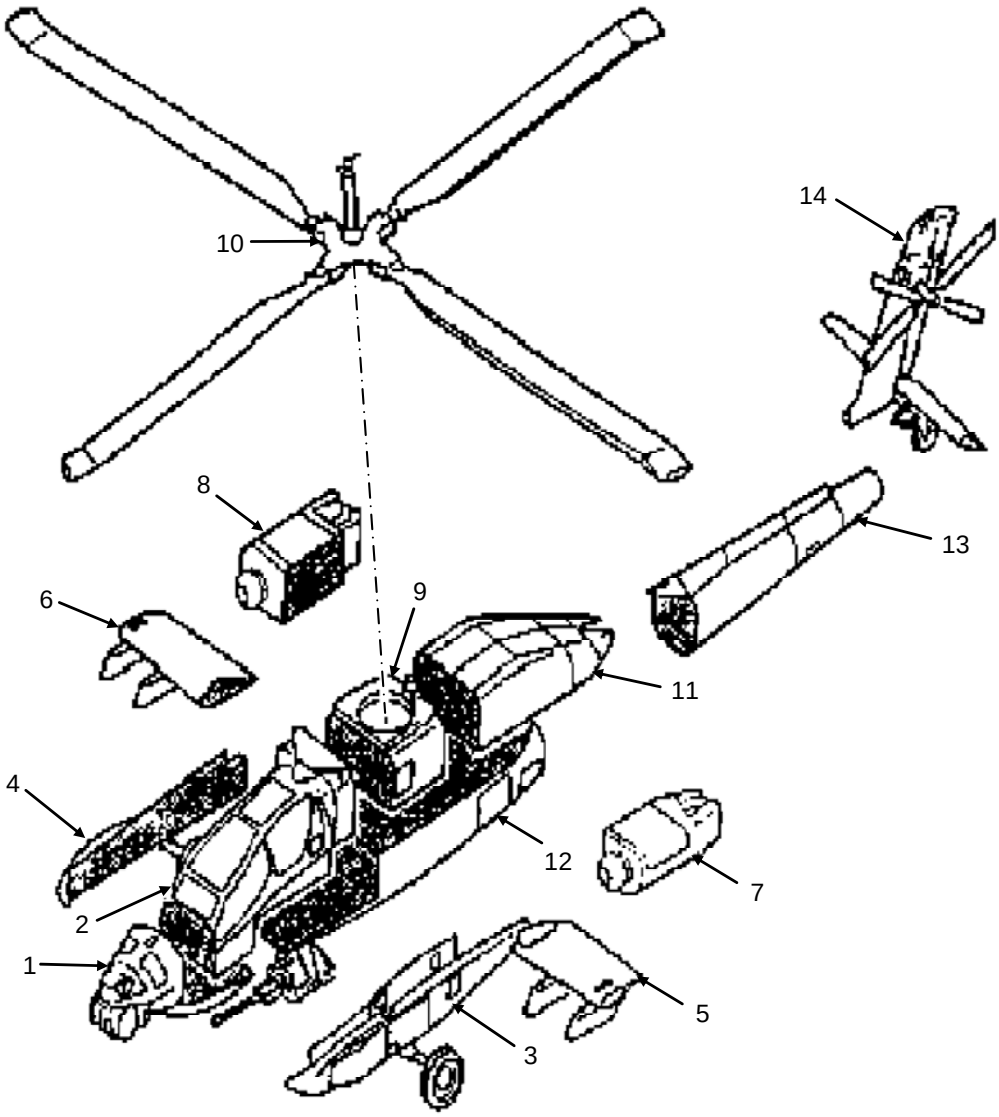

AREA NO.	AREA TITLE
1	FORWARD FUSELAGE
2	CREW STATIONS
3	LEFT FORWARD AVIONICS BAY AND MAIN LANDING GEAR
4	RIGHT FORWARD AVIONICA BAY AND MAIN LANDING GEAR
5	LEFT WING AND PYLONS
6	RIGHT WING AND PYLONS
7	LEFT ENGINE AND NOSE GEARBOX
8	RIGHT ENGINE AND NOSE GEARBOX
9	MAIN TRANSMISSION
10	MAIN ROTOR
11	AFT EQUIPMENT BAY
12	MID AND LOWER FUSELAGE
13	AFT FUSELAGE
14	EMPENNAGE, TAIL ROTOR AND TAIL LANDING GEAR

FIGURE E-16. Example of an inspection area diagram.

Source: https://assist.dla.mil -- Downloaded: 2016-12-09T23:32Z
Check the source to verify that this is the current version before use.

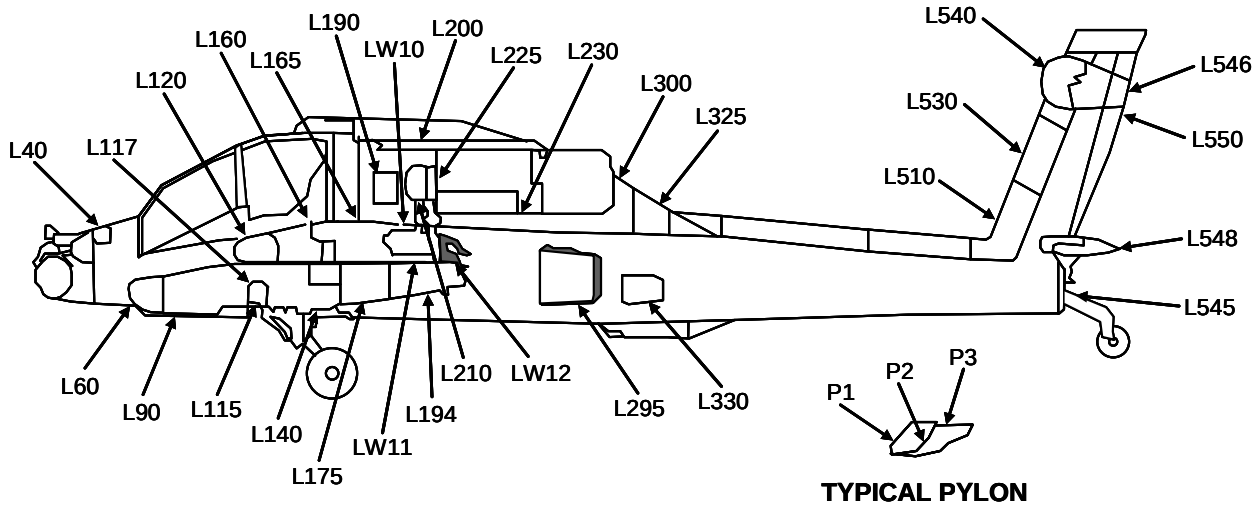

LEFT SIDE

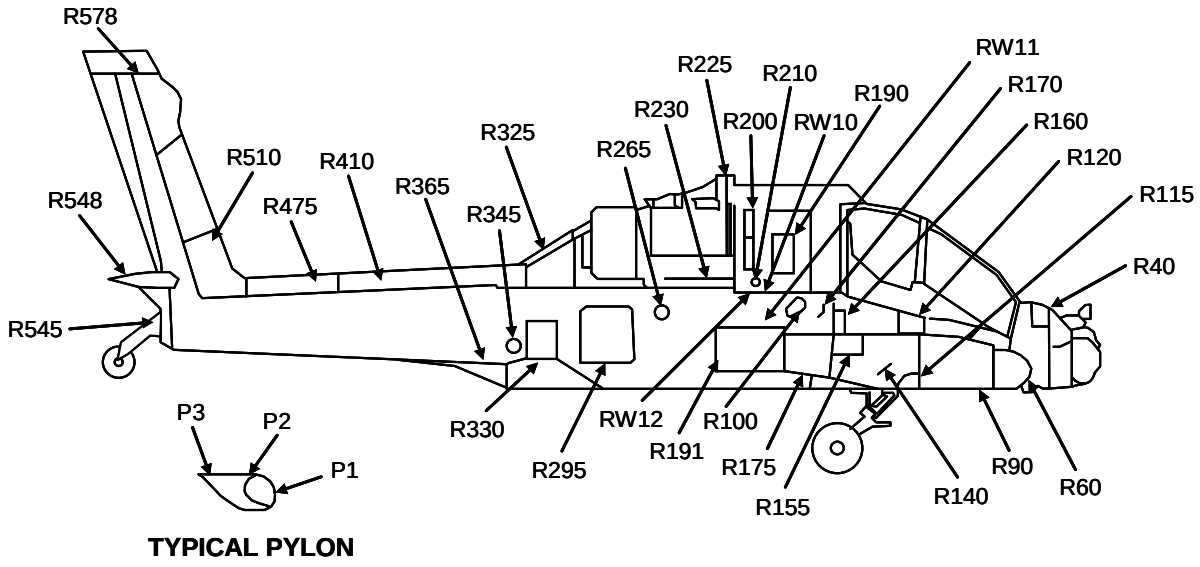

RIGHT SIDE

FIGURE E-17. Example of inspection access provisions.

Source: https://assist.dla.mil -- Downloaded: 2016-12-09T23:32Z
Check the source to verify that this is the current version before use.

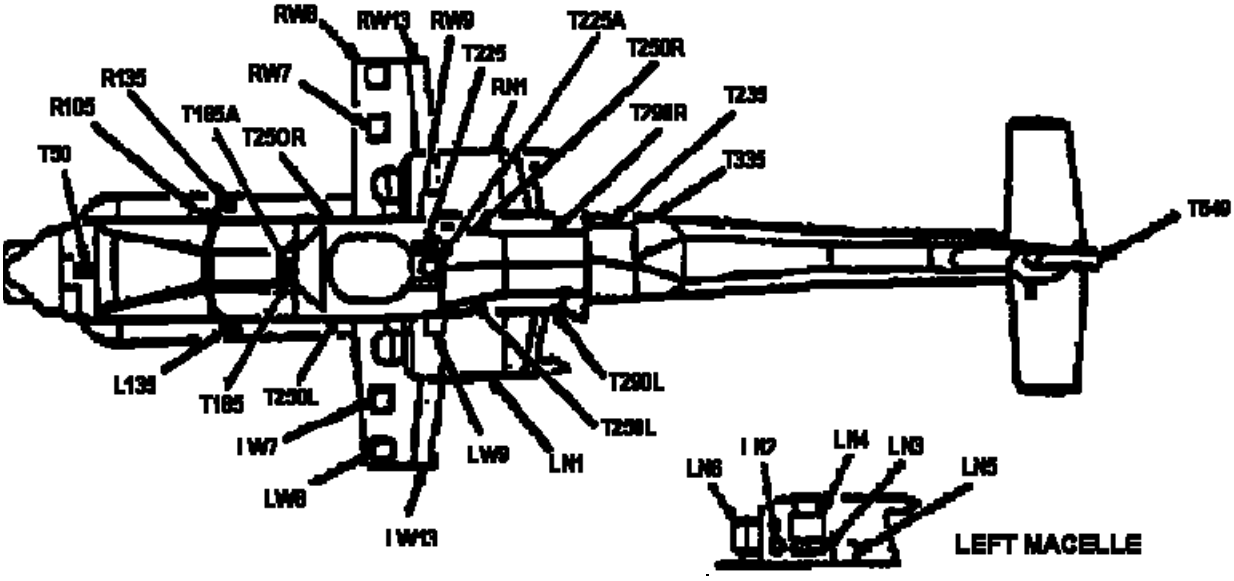

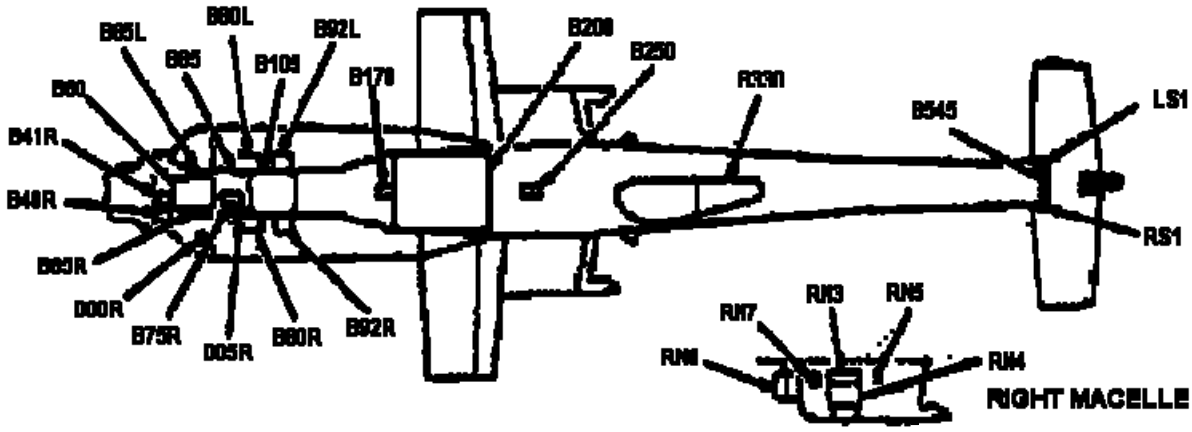

FIGURE E-17. <u>Example of inspection access provisions.</u>- Continued.

Source: https://assist.dla.mil -- Downloaded: 2016-12-09T23:32Z
Check the source to verify that this is the current version before use.

This page intentionally left blank.

Source: https://assist.dla.mil -- Downloaded: 2016-12-09T23:32Z
Check the source to verify that this is the current version before use.

APPENDIX F

REPAIR PARTS AND SPECIAL TOOLS LIST (RPSTL)

F.1 SCOPE.

F.1.1 Scope. This appendix establishes the technical content requirements for the preparation of Repair Parts and Special Tools Lists (RPSTLs) for major weapon systems, and their related systems, subsystems, equipment, weapons replacement assemblies (WRAs), and shop replacement assemblies (SRAs). This Appendix is a mandatory part of this standard. The information contained herein is intended for compliance. The requirements are applicable for all maintenance levels through overhaul (depot) including Depot Maintenance Work Requirements (DMWRs) and National Maintenance Work Requirements (NMWRs).

F.2 APPLICABLE DOCUMENTS.

The applicable documents in section 2 apply to this appendix.

F.3 DEFINITIONS.

The definitions in section 3 apply to this appendix.

F.4 GENERAL REQUIREMENTS.

F.4.1 General. The RPSTL provides authorized spares and repair parts; special tools; special Test, Measurement, and Diagnostic Equipment (TMDE); and other special support equipment required for performance of all levels of maintenance of the weapon system/equipment, subsystems, assemblies, and components. It authorizes the requisitioning, issue and disposition of spares, repair parts and special tools in accordance with the Source, Maintenance and Recoverability (SMR) codes. Unless otherwise specified by the acquiring activity, all RPSTL information for all levels of maintenance, including depot, shall be in a single RPSTL. When separate RPSTLs are specified by the acquiring activity, they shall be grouped either by system, subsystem, or by maintenance level. Duplication of the RPSTL data should be avoided. An explanation of all applicable Department of Army maintenance levels is provided in section 3.

F.4.2 Preparation of digital data for electronic delivery. Technical manual data prepared and delivered digitally in accordance with this standard shall be Extensible Markup Language (XML) tagged using the Document Type Definition (DTD) for RPSTL and the XML Stylesheet Language (XSL), or style sheets in accordance with MIL-STD-2361. Refer to 4.6 for information on obtaining or accessing this DTD. XML tags used in the DTD are noted throughout the text of this standard in bracketed, bold characters (i.e., **<plwp>**) as a convenience for the TM author and to ensure that the tags are used correctly when developing a document instance.

F.4.3 Use of the DTD/XSLs. The DTD referenced in this standard interpret the technical content and structure for the functional requirements contained in this standard and are mandatory for use. The XSLs referenced herein interpret the style and format. As specified by the contracting activity, XSLs, or style sheets may be used to produce final reproducible paper copy for all TMs prepared in accordance with this standard. For additional information on the DTD and specific XSLs, refer to MIL-STD-2361.

Source: https://assist.dla.mil -- Downloaded: 2016-12-09T23:32Z
Check the source to verify that this is the current version before use.

F.4.4 Content structure and format. The examples provided herein are an accurate representation of the content structure and format requirements contained in this appendix and shall be followed to permit the effective use of the DTD for RPSTL.

F.4.5 Style and format. This standard provides style and format requirements for the technical content requirements described in this appendix. These requirements are considered mandatory and are intended for compliance.

F.4.6 Work package development. Technical manual data developed in accordance with this standard shall be divided into individual, stand alone units of information called work packages. A work package shall consist of descriptive, operational, maintenance, troubleshooting, support, or parts information for the weapon system or equipment.

F.4.7 Selective application and tailoring. This standard contains some requirements that may not be applicable to the preparation of all technical manuals. Selective application and tailoring of requirements contained in this standard are the responsibility of the acquiring activity and shall be accomplished using Appendix A, Technical Manual Content Selection Matrixes. The applicability of some requirements is also designated by one of the following statements: unless specified otherwise by the acquiring activity; as/when specified by the acquiring activity; or when specified by the acquiring activity.

F.5 DETAILED REQUIREMENTS.

F.5.1 General. The requirements provided in this appendix provide the technical content requirements for the preparation of RPSTL data.

F.5.2 Parts information development.

F.5.3 Preparation of RPSTLs. RPSTL requirements include

a. Introductory information,
b. Listings of all authorized spare and repair parts, special tools, special test, measurement, and diagnostic equipment (TMDE), and other support equipment required for performance of maintenance and
c. Illustrations to identify and locate the spare and repair parts.

RPSTLs shall be prepared for weapon systems, major components and applicable support and interface equipment. This information shall be contained in one of the following:

a. A separate RPSTL Technical Manual (TM),
b. RPSTL work packages included in a maintenance TM,
c. RPSTL work packages included in a Depot Maintenance Work Requirement (DMWR), or
d. RPSTL work packages included in a National Maintenance Work Requirement (NMWR).

F.5.3.1 Separate RPSTL TM. Separate RPSTL TMs shall consist of front and rear matter and a Parts Information Chapter **<pim>** containing the work packages described below.

F.5.3.2 Parts information chapter **<pim>**. Unless otherwise specified, the PIM chapter shall contain the work packages listed below in the order specified.

a. A single introduction work package **<introwp>** (see F.5.3.5)**.**

Source: https://assist.dla.mil -- Downloaded: 2016-12-09T23:32Z
Check the source to verify that this is the current version before use.

b. One or more repair parts list work packages **<plwp>** (see F.5.3.6)**.**

c. When there is a special tools work package and the special tools have repair parts, a repair parts for special tools work package **<stl_partswp>** (see F.5.3.7) shall be prepared.

d. When kit parts are listed as described under option 2 (see F.5.3.6.3.2.6.h(3)), a kit parts list work package **<kitswp>** shall be prepared (see F.5.3.8).

e. When bulk items are listed in the parts list, a bulk items work package **<bulkitemswp>** shall be prepared (see F.5.3.9).

f. When special tools are listed, one or more special tools list work package **<stlwp>** (see F.5.3.10).

g. A National Stock Number (NSN) index work package **<nsnindxwp**> (see F.5.3.11.1) shall be prepared.

h. A part number index work package **<pnindxwp>** (see F.5.3.11.2) shall be prepared.

i. When specified by the acquiring activity, a reference designator index work package (**Optional**) **<refdesindxwp>** (see F.5.3.11.3) shall be prepared.

F.5.3.3 RPSTL work packages requirements. When a separate parts manual is not procured and repair parts and/or special tools are required, the work packages described above shall be prepared as specified in F.5.3.3.1 or F.5.3.3.2.

F.5.3.3.1 RPSTL work packages **<pim>** included in a maintenance TM. When a separate RPSTL manual (**<pim>**) is not required or authorized, RPSTL data shall be included in a separate PIM chapter that precedes the supporting information chapter <**sim**> in a maintenance TM. Introduction, repair parts list, kit parts, bulk items, special tools list, and cross reference indexes work packages as described in F.5.3.5 through F.5.3.11 shall be included as specified herein. Front and rear matter requirements shall become part of the maintenance TM that includes the RPSTL work packages.

F.5.3.3.2 RPSTL work packages included in a DMWR/NMWR. If an item of equipment is programmed for depot overhaul and no repair parts (including modules, printed circuits, and components) are authorized for replacement at a level below depot maintenance, authorized repair parts data shall appear in the applicable DMWR/NMWR. Introduction, repair parts list, kit parts, bulk items, special tools list, and cross reference indexes work packages as described in F.5.3.5 through F.5.3.11 shall be included as specified herein.

F.5.3.3.2.1 Depot repair parts. Unless otherwise specified by the acquiring activity, depot level repair parts shall be included in the single RPSTL (see F.4.1). When the acquiring activity specifies a depot (DMWR/NMWR) level RPSTL, only depot level parts shall appear in the depot RPSTL. Figure(s) in the lower maintenance level RPSTL that contain both depot coded and non depot coded parts shall identify all parts. The appropriate SMR code shall identify the repair level. If the RPSTL TM includes depot repair parts, the statement "Including Depot Maintenance Repair Parts" shall be added to the title of the RPSTL TM.

Source: https://assist.dla.mil -- Downloaded: 2016-12-09T23:32Z
Check the source to verify that this is the current version before use.

F.5.3.4 Repair parts list, special tools, and kits work package layout. Parts lists, special tools list and kit work packages shall start on a right hand page in accordance with 4.7.2.3. The first page shall contain the work package identification information **<wpidinfo>** and when practicable, the figure and parts list is placed on the first page. When the figure and parts list cannot be included on a single page, the part list shall begin on the next right-hand page following the figure(s) Refer to FIGURE F-1 for possible layout scenarios. Refer to F.5.3.12.1 for the figure layout requirements.

F.5.3.5 Introduction work package **<introwp> (Ground Systems)**. The introduction work package shall be prepared to the requirements contained in F.5.3.5.1 through F.5.3.5.4. (Refer to FIGURE F-2.)

F.5.3.5.1 Work package identification information **<wpidinfo>**. Work package identification information is required for this work package (refer to 4.7.9.1).

F.5.3.5.2 Initial setup information. Initial setup information is not required for this work package.

F.5.3.5.3 Introduction **<intro>**. The verbatim text (below within the quotation marks) shall be included. The italicized text shall be replaced with the required system specific information or select the corresponding phrase for the specific system. The publication list shall identify the publication number and title in numerical sequence. If the publication is non-government, the source shall be given and shall be listed alphabetically by title.

"**INTRODUCTION**

SCOPE

This RPSTL lists and authorizes spares and repair parts; special tools; special test, measurement, and diagnostic equipment (TMDE); and other special support equipment required for performance of (*enter maintenance level*) maintenance of the (*enter item name*). It authorizes the requisitioning, issue, and disposition of spares, repair parts, and special tools as indicated by the source, maintenance, and recoverability (SMR) codes.

GENERAL

In addition to the Introduction work package, this RPSTL is divided into the following work packages.

1. Repair Parts List Work Packages. Work packages containing lists of spares and repair parts authorized by this RPSTL for use in the performance of maintenance. These work packages also include parts which must be removed for replacement of the authorized parts. Parts lists are composed of functional groups in ascending alphanumeric sequence, with the parts in each group listed in ascending figure and item number sequence. Sending units, brackets, filters, and bolts are listed with the component they mount on. Bulk materials are listed by item name in FIG. BULK at the end of the work packages. *(choose one of the following) Repair parts kits are listed separately in their own functional group and work package* ***OR*** *Repair parts kits are listed at the end of the individual work packages.* Repair parts for reparable special tools are also listed in a separate work package. Items listed are shown on the associated illustrations.

Source: https://assist.dla.mil -- Downloaded: 2016-12-09T23:32Z
Check the source to verify that this is the current version before use.

2. Special Tools List Work Packages. Work packages containing lists of special tools, special TMDE, and special support equipment authorized by this RPSTL (as indicated by Basis of Issue (BOI) information in the DESCRIPTION AND USABLE ON CODE (UOC) column). Tools that are components of common tool sets and/or Class VII are not listed.

3. Cross-Reference Indexes Work Packages. There are (*enter applicable number*) cross-reference indexes work packages in this RPSTL: the National Stock Number (NSN) Index work package, *and* the Part Number (P/N) Index work package (*If reference designator is used enter: and the Reference Designator Index work package)*. The National Stock Number Index work package refers you to the figure and item number. The Part Number Index work package refers you to the figure and item number. (*If reference designator is used enter: The Reference Designator Index work package refers you to the figure and item number).*

EXPLANATION OF COLUMNS IN THE REPAIR PARTS LIST AND SPECIAL TOOLS LIST WORK PACKAGES

ITEM NO. (Column (1)). Indicates the number used to identify items called out in the illustration.

SMR CODE (Column (2)). The SMR code containing supply/requisitioning information, maintenance level authorization criteria, and disposition instruction, as shown in the following breakout. This entry may be subdivided into 4 subentries, one for each service.

TABLE 1. SMR Code Explanation.

Source Code	**Maintenance Code**		**Recoverability Code**
XX	XX		X
1st two positions: How to get an item.	3rd position: who can install, replace, or use the item.	4th position: Who can do complete repair* on the item	5th position: Who determines disposition action on unserviceable items.

*Complete Repair: Maintenance capacity, capability, and authority to perform all corrective maintenance tasks of the "Repair" function in a use/user environment in order to restore serviceability to a failed item.

Source Code. The source code tells you how you get an item needed for maintenance, repair, or overhaul of an end item/equipment. Explanations of source codes follow:

Source: https://assist.dla.mil -- Downloaded: 2016-12-09T23:32Z
Check the source to verify that this is the current version before use.

Source Code	Application/Explanation
PA PB PC PD PE PF PG PH PR PZ	**NOTE** Items coded PC are subject to deterioration. Stock items; use the applicable NSN to requisition/request items with these source codes. They are authorized to the level indicated by the code entered in the third position of the SMR code.
KD KF KB	Items with these codes are not to be requested/requisitioned individually. They are part of a kit which is authorized to the maintenance level indicated in the third position of the SMR code. The complete kit must be requisitioned and applied.
MF-Made at field MH-Made at below depot/sustainment level ML-Made at SRA MD-Made at depot MG-Navy only	Items with these codes are not to be requisitioned/requested individually. They must be made from bulk material which is identified by the part number in the DESCRIPTION AND USABLE ON CODE (UOC) column and listed in the bulk material group work package of the RPSTL. If the item is authorized to you by the third position code of the SMR code, but the source code indicates it is made at higher level, order the item from the higher level of maintenance.
AF-Assembled by field AH-Assembled by below depot sustainment level AL-Assembled by SRA AD-Assembled by depot AG-Navy only	Items with these codes are not to be requested/requisitioned individually. The parts that make up the assembled item must be requisitioned or fabricated and assembled at the level of maintenance indicated by the source code. If the third position of the SMR code authorizes you to replace the item, but the source code indicates the item is assembled at a higher level, order the item from the higher level of maintenance.
XA	Do not requisition an "XA" coded item. Order the next higher assembly.(Refer to NOTE below.)
XB	If an item is not available from salvage, order it using the CAGEC and part number.
XC	Installation drawings, diagrams, instruction sheets, field service drawings; identified by manufacturer's part number.

Source: https://assist.dla.mil -- Downloaded: 2016-12-09T23:32Z
Check the source to verify that this is the current version before use.

Source Code	Application/Explanation
XD	Item is not stocked. Order an XD-coded item through local purchase or normal supply channels using the CAGEC and part number given, if no NSN is available.

NOTE

Cannibalization or controlled exchange, when authorized, may be used as a source of supply for items with the above source codes except for those items source coded "XA" or those aircraft support items restricted by requirements of AR 750-1.

Maintenance Code. Maintenance codes tell you the level(s) of maintenance authorized to use and repair support items. The maintenance codes are entered in the third and fourth positions of the SMR code as follows:

Third Position. The maintenance code entered in the third position tells you the lowest maintenance level authorized to remove, replace, and use an item. The maintenance code entered in the third position will indicate authorization to the following levels of maintenance:

Maintenance Code	Application/Explanation
F -	Field maintenance can remove, replace, and use the item.
H -	Below Depot Sustainment maintenance can remove, replace, and use the item.
L -	Specialized repair activity can remove, replace, and use the item.
G -	Afloat and ashore intermediate maintenance can remove, replace, and use the item (Navy only)
K -	Contractor facility can remove, replace, and use the item
Z -	Item is not authorized to be removed, replace, or used at any maintenance level
D -	Depot can remove, replace, and use the item.

*NOTE - Army may use C in the third position. However, for joint service publications, Army will use O.

Fourth Position. The maintenance code entered in the fourth position tells you whether or not the item is to be repaired and identifies the lowest maintenance level with the capability to do complete repair (perform all authorized repair functions).

NOTE

Some limited repair may be done on the item at a lower level of maintenance, if authorized by the Maintenance Allocation Chart (MAC) and SMR codes.

Source: https://assist.dla.mil -- Downloaded: 2016-12-09T23:32Z
Check the source to verify that this is the current version before use.

Maintenance Code	**Application/Explanation**
F -	Field is the lowest level that can do complete repair of the item.
H -	Below Depot Sustainment is the lowest level that can do complete repair of the item.
L -	Specialized repair activity (enter specialized repair activity or TASMG designator) is the lowest level that can do complete repair of the item.
D -	Depot is the lowest level that can do complete repair of the item.
G -	Both afloat and ashore intermediate levels are capable of complete repair of item. (Navy only)
K -	Complete repair is done at contractor facility
Z -	Nonreparable. No repair is authorized.
B -	No repair is authorized. No parts or special tools are authorized for maintenance of "B" coded item. However, the item may be reconditioned by adjusting, lubricating, etc., at the user level.

Recoverability Code. Recoverability codes are assigned to items to indicate the disposition action on unserviceable items. The recoverability code is shown in the fifth position of the SMR code as follows:

Recoverability Code	**Application/Explanation**
Z -	Nonreparable item. When unserviceable, condemn and dispose of the item at the level of maintenance shown in the third position of the SMR code.
F -	Reparable item. When uneconomically reparable, condemn and dispose of the item at the field level.
H -	Reparable item. When uneconomically reparable, condemn and dispose of the item at the below depot sustainment level.
D -	Reparable item. When beyond lower level repair capability, return to depot. Condemnation and disposal of item are not authorized below depot level.
L -	Reparable item. Condemnation and disposal not authorized below Specialized Repair Activity (SRA).
A -	Item requires special handling or condemnation procedures because of specific reasons (such as precious metal content, high dollar value, critical material, or hazardous material). Refer to appropriate manuals/directives for specific instructions.
G -	Filed level reparable item. Condemn and dispose at either afloat or ashore intermediate levels. (Navy only)
K -	Reparable item. Condemnation and disposal to be performed at contractor facility

NSN (Column (3)). The NSN for the item is listed in this column.

CAGEC (Column (4)). The Commercial and Government Entity Code (CAGEC) is a five-digit code which is used to identify the manufacturer, distributor, or Government agency/activity that supplies the item.

Source: https://assist.dla.mil -- Downloaded: 2016-12-09T23:32Z
Check the source to verify that this is the current version before use.

PART NUMBER (Column (5)). Indicates the primary number used by the manufacturer (individual, company, firm, corporation, or Government activity), which controls the design and characteristics of the item by means of its engineering drawings, specifications, standards, and inspection requirements to identify an item or range of items.

NOTE

When you use an NSN to requisition an item, the item you receive may have a different part number from the number listed.

DESCRIPTION AND USABLE ON CODE (UOC) (Column (6)). This column includes the following information:

1. The federal item name, and when required, a minimum description to identify the item.

2. Part numbers of bulk materials are referenced in this column in the line entry to be manufactured or fabricated.

3. Hardness Critical Item (HCI). A support item that provides the equipment with special protection from electromagnetic pulse (EMP) damage during a nuclear attack.

4. The statement END OF FIGURE appears just below the last item description in column (6) for a given figure in both the repair parts list and special tools list work packages.

QTY (Column (7)). The QTY (quantity per figure) column indicates the quantity of the item used in the breakout shown on the illustration/figure, which is prepared for a functional group, subfunctional group, or an assembly. A "V" appearing in this column instead of a quantity indicates that the quantity is variable and quantity may change from application to application. ”

(MC) Include for Marine Corps manuals only.

“USMC QTY per Equip (Column (8)). This column accommodates the Marine Corps quantity per equipment requirement.”

“EXPLANATION OF CROSS-REFERENCE INDEXES WORK PACKAGES FORMAT AND COLUMNS

1. National Stock Number (NSN) Index Work Package. NSN’s in this index are listed in National Item Identification Number (NIIN) sequence.

STOCK NUMBER Column. This column lists the NSN in NIIN sequence. The NIIN consists of the last nine digits of the NSN. When using this column to locate an item, ignore the first four digits of the NSN. However, the complete NSN should be used when ordering items by stock number.

For example, if the NSN is 5385-01-574-1476, the NIIN is 01-574-1476.

FIG. Column. This column lists the number of the figure where the item is identified/located. The figures are in numerical order in the repair parts list and special tools list work packages.

Source: https://assist.dla.mil -- Downloaded: 2016-12-09T23:32Z
Check the source to verify that this is the current version before use.

ITEM Column. The item number identifies the item associated with the figure listed in the adjacent FIG. column. This item is also identified by the NSN listed on the same line.

2. Part Number (P/N) Index Work Package. Part numbers in this index are listed in ascending alphanumeric sequence (vertical arrangement of letter and number combinations which places the first letter or digit of each group in order A through Z, followed by the numbers 0 through 9 and each following letter or digit in like order).

PART NUMBER Column. Indicates the part number assigned to the item.

FIG. Column. This column lists the number of the figure where the item is identified/located in the repair parts list and special tools list work packages.

ITEM Column. The item number is the number assigned to the item as it appears in the figure referenced in the adjacent figure number column."

Include 3 if reference designator index is used.

"3. Reference Designator Index Work Package. Reference designators in this index are listed in ascending alphanumeric sequence (vertical arrangement of letter and number combination which places the first letter or digit of each group in order "A" through "Z," followed by the numbers "0" through "9" and each following letter or digit in like order).

REFERENCE DESIGNATOR Column. Indicates the reference designator assigned to the item.

FIG. Column. This column lists the number of the figure where the item is identified/located in the repair parts list or special tools list work package.

ITEM Column. The item number is the number assigned to the item as it appears in the figure referenced in the adjacent figure number column.

SPECIAL INFORMATION

UOC. The UOC appears in the lower left corner of the Description Column heading. Usable on codes are shown as "UOC:..." in the Description Column (justified left) on the first line under the applicable item/nomenclature. Uncoded items are applicable to all models. Identification of the UOCs used in the RPSTL are:

Code	Used On
PAA	Model M114
PAB	Model M114A
PAC	Model M114B”

Include appropriate UOC content, as applicable.

"Fabrication Instructions. Bulk materials required to manufacture items are listed in the bulk material functional group of this RPSTL. Part numbers for bulk material are also referenced in the Description Column of the line item entry for the item to be manufactured/fabricated. Detailed fabrication instructions for items source coded to be manufactured or fabricated are found in (enter applicable TM number).

Index Numbers. Items which have the word BULK in the figure column will have an index number shown in the item number column. This index number is a

Source: https://assist.dla.mil -- Downloaded: 2016-12-09T23:32Z
Check the source to verify that this is the current version before use.

cross-reference between the NSN / Part Number (P/N) Index work packages and the bulk material list in the repair parts list work package."

For a combined narrative-RPSTL manual associated publications shall not be included.

"Associated Publications. The publication(s) listed below pertains to the (enter item name):

Publication **Short Title**"

The following paragraph shall appear only in the field maintenance RPSTL special instructions.

"Illustrations List. The illustrations in this RPSTL contain field authorized items. Illustrations published in (enter applicable TM number for the higher maintenance level RPSTL, e.g., for field, below depot sustainment, etc.) that contain field authorized items also appear in this RPSTL. The tabular list in the repair parts list work package contains only those parts coded "F" in the third position of the SMR code, therefore, there may be a break in the item number sequence."

HOW TO LOCATE REPAIR PARTS

1. When NSNs or Part Numbers Are Not Known.

First. Using the table of contents, determine the assembly group to which the item belongs. This is necessary since figures are prepared for assembly groups and subassembly groups, and lists are divided into the same groups.

Second. Find the figure covering the functional group or the subfunctional group to which the item belongs.

Third. Identify the item on the figure and note the number(s).

Fourth. Look in the repair parts list work packages for the figure and item numbers. The NSNs and part numbers are on the same line as the associated item numbers.

2. When NSN Is Known.

First. If you have the NSN, look in the STOCK NUMBER column of the NSN index work package. The NSN is arranged in NIIN sequence. Note the figure and item number next to the NSN.

Second. Turn to the figure and locate the item number. Verify that the item is the one you are looking for.

3. When Part Number Is Known.

First. If you have the part number and not the NSN, look in the PART NUMBER column of the part number index work package. Identify the figure and item number.

Second. Look up the item on the figure in the applicable repair parts list work package.”

Include 4 only if the RPSTL has a reference designator index work package.

“4. When Reference Designator Is Known.

First. If you know the reference designator, look in the REFERENCE DESIGNATOR column of the reference designator index work package. Note the figure and item number.

Second. Turn to the figure and locate the item number. Verify that the item is the one you are looking for.

ABBREVIATIONS

Source: https://assist.dla.mil -- Downloaded: 2016-12-09T23:32Z
Check the source to verify that this is the current version before use.

Abbreviation **Explanation"**

Include uncommon abbreviations used in the RPSTL. List/define those not found in ASME Y14.38.

F.5.3.5.4 Indexed RPSTL illustration and legend **<figure>**. When specified by the acquiring activity an indexed RPSTL illustration and legend shall be added to the end of the introduction work package. Complex weapon systems have numerous repair parts lists associated to the equipment and the illustration and legend assists in locating the repair parts information. The indexed RPSTL illustration shall provide an exploded view of the equipment with index numbers pointing to the major functional groups. The illustration shall have a legend that defines the item number, major functional group figure title and figure number (Refer to FIGURE F-3).

F.5.3.5A Introduction work package **<introwp> (Aviation Systems)**. The introduction work package shall be prepared to the requirements contained in F.5.3.5.1 through F.5.3.5.4. (Refer to FIGURE F-2.)

F.5.3.5.1A Work package identification information **<wpidinfo>**. Work package identification information is required for this work package (refer to 4.7.9.1).

F.5.3.5.2A Initial setup information. Initial setup information is not required for this work package.

F.5.3.5.3A Introduction **<intro>**. The verbatim text (below within the quotation marks) shall be included. The italicized text shall be replaced with the required system specific information or select the corresponding phrase for the specific system. The publication list shall identify the publication number and title in numerical sequence. If the publication is non-government, the source shall be given and shall be listed alphabetically by title.

"**INTRODUCTION**

SCOPE

This RPSTL lists and authorizes spares and repair parts; special tools; special test, measurement, and diagnostic equipment (TMDE); and other special support equipment required for performance of (*enter maintenance level*) maintenance of the (*enter item name*). It authorizes the requisitioning, issue, and disposition of spares, repair parts, and special tools as indicated by the source, maintenance, and recoverability (SMR) codes.

GENERAL

In addition to the Introduction work package, this RPSTL is divided into the following work packages.

1. Repair Parts List Work Packages. Work packages containing lists of spares and repair parts authorized by this RPSTL for use in the performance of maintenance. These work packages also include parts which must be removed for replacement of the authorized parts. Parts lists are composed of functional groups in ascending alphanumeric sequence, with the parts in each group listed in ascending figure and item number sequence. Sending units, brackets, filters, and bolts are listed with the component they mount on. Bulk materials are listed by item name in FIG. BULK at the end of the work packages. *(choose one of the following) Repair parts kits are listed separately in their own functional group and work package* ***OR*** *Repair parts kits are listed at the end of the individual work packages.* Repair parts for reparable special tools are also listed in a separate work package. Items listed are shown on the associated illustrations.

Source: https://assist.dla.mil -- Downloaded: 2016-12-09T23:32Z
Check the source to verify that this is the current version before use.

2. Special Tools List Work Packages. Work packages containing lists of special tools, special TMDE, and special support equipment authorized by this RPSTL (as indicated by Basis of Issue (BOI) information in the DESCRIPTION AND USABLE ON CODE (UOC) column). Tools that are components of common tool sets and/or Class VII are not listed.

3. Cross-Reference Indexes Work Packages. There are (*enter applicable number*) cross-reference indexes work packages in this RPSTL: the National Stock Number (NSN) Index work package, *and* the Part Number (P/N) Index work package (*If reference designator is used enter: and the Reference Designator Index work package)*. The National Stock Number Index work package refers you to the figure and item number. The Part Number Index work package refers you to the figure and item number. (*If reference designator is used enter: The Reference Designator Index work package refers you to the figure and item number).*

EXPLANATION OF COLUMNS IN THE REPAIR PARTS LIST AND SPECIAL TOOLS LIST WORK PACKAGES

ITEM NO. (Column (1)). Indicates the number used to identify items called out in the illustration.

SMR CODE (Column (2)). The SMR code containing supply/requisitioning information, maintenance level authorization criteria, and disposition instruction, as shown in the following breakout. This entry may be subdivided into 4 subentries, one for each service.

TABLE 1. SMR Code Explanation.

Source Code	**Maintenance Code**		**Recoverability Code**
XX	XX		X
1st two positions: How to get an item.	3rd position: who can install, replace, or use the item.	4th position: Who can do complete repair* on the item	5th position: Who determines disposition action on unserviceable items.

*Complete Repair: Maintenance capacity, capability, and authority to perform all corrective maintenance tasks of the "Repair" function in a use/user environment in order to restore serviceability to a failed item.

Source Code. The source code tells you how you get an item needed for maintenance, repair, or overhaul of an end item/equipment. Explanations of source codes follow:

Source: https://assist.dla.mil -- Downloaded: 2016-12-09T23:32Z
Check the source to verify that this is the current version before use.

Source Code	Application/Explanation
PA PB PC PD PE PF PG PH PR PZ	**NOTE** Items coded PC are subject to deterioration. Stock items; use the applicable NSN to requisition/request items with these source codes. They are authorized to the level indicated by the code entered in the third position of the SMR code.
KD KF KB	Items with these codes are not to be requested/requisitioned individually. They are part of a kit which is authorized to the maintenance level indicated in the third position of the SMR code. The complete kit must be requisitioned and applied.
MO-Made at AMC MF-Made at ASB ML-Made at TASMG MD-Made at depot MG-Navy only	Items with these codes are not to be requisitioned/requested individually. They must be made from bulk material which is identified by the part number in the DESCRIPTION AND USABLE ON CODE (UOC) column and listed in the bulk material group work package of the RPSTL. If the item is authorized to you by the third position code of the SMR code, but the source code indicates it is made at higher level, order the item from the higher level of maintenance.
AO-Assembled by AMC AF-Assembled by ASB AL-Assembled by TASMG AD-Assembled by depot AG-Navy only	Items with these codes are not to be requested/requisitioned individually. The parts that make up the assembled item must be requisitioned or fabricated and assembled at the level of maintenance indicated by the source code. If the third position of the SMR code authorizes you to replace the item, but the source code indicates the item is assembled at a higher level, order the item from the higher level of maintenance.
XA	Do not requisition an "XA" coded item. Order the next higher assembly.(Refer to NOTE below.)
XB	If an item is not available from salvage, order it using the CAGEC and part number.
XC	Installation drawings, diagrams, instruction sheets, field service drawings; identified by manufacturer's part number.

Source: https://assist.dla.mil -- Downloaded: 2016-12-09T23:32Z
Check the source to verify that this is the current version before use.

Source Code	Application/Explanation
XD	Item is not stocked. Order an XD-coded item through local purchase or normal supply channels using the CAGEC and part number given, if no NSN is available.

NOTE

Cannibalization or controlled exchange, when authorized, may be used as a source of supply for items with the above source codes except for those items source coded "XA" or those aircraft support items restricted by requirements of AR 750-1.

Maintenance Code. Maintenance codes tell you the level(s) of maintenance authorized to use and repair support items. The maintenance codes are entered in the third and fourth positions of the SMR code as follows:

Third Position. The maintenance code entered in the third position tells you the lowest maintenance level authorized to remove, replace, and use an item. The maintenance code entered in the third position will indicate authorization to the following levels of maintenance:

Maintenance Code	Application/Explanation
O -	AMC maintenance can remove, replace, and use the item
F -	ASB maintenance can remove, replace, and use the item.
L -	TASMG can remove, replace, and use the item.
G -	Afloat and ashore intermediate maintenance can remove, replace, and use the item (Navy only)
K -	Contractor facility can remove, replace, and use the item
Z -	Item is not authorized to be removed, replace, or used at any maintenance level
D -	Depot can remove, replace, and use the item.

*NOTE - Army may use C in the third position. However, for joint service publications, Army will use O.

Fourth Position. The maintenance code entered in the fourth position tells you whether or not the item is to be repaired and identifies the lowest maintenance level with the capability to do complete repair (perform all authorized repair functions).

NOTE

Some limited repair may be done on the item at a lower level of maintenance, if authorized by the Maintenance Allocation Chart (MAC) and SMR codes.

Source: https://assist.dla.mil -- Downloaded: 2016-12-09T23:32Z
Check the source to verify that this is the current version before use.

Maintenance Code	Application/Explanation
O -	AMC is the lowest level that can do complete repair of the item.
F -	ASB is the lowest level that can do complete repair of the item.
L -	TASMG (enter TASMG designator) is the lowest level that can do complete repair of the item.
D -	Depot is the lowest level that can do complete repair of the item.
G -	Both afloat and ashore intermediate levels are capable of complete repair of item. (Navy only)
K -	Complete repair is done at contractor facility
Z -	Nonreparable. No repair is authorized.
B -	No repair is authorized. No parts or special tools are authorized for maintenance of "B" coded item. However, the item may be reconditioned by adjusting, lubricating, etc., at the user level.

Recoverability Code. Recoverability codes are assigned to items to indicate the disposition action on unserviceable items. The recoverability code is shown in the fifth position of the SMR code as follows:

Recoverability Code	Application/Explanation
Z -	Nonreparable item. When unserviceable, condemn and dispose of the item at the level of maintenance shown in the third position of the SMR code.
O -	Reparable item. When uneconomically reparable, condemn and dispose of the item at the AMC level.
F -	Reparable item. When uneconomically reparable, condemn and dispose of the item at the ASB level.
D -	Reparable item. When beyond lower level repair capability, return to depot. Condemnation and disposal of item are not authorized below depot level.
L -	Reparable item. Condemnation and disposal not authorized below TASMG.
A -	Item requires special handling or condemnation procedures because of specific reasons (such as precious metal content, high dollar value, critical material, or hazardous material). Refer to appropriate manuals/directives for specific instructions.
G -	Filed level reparable item. Condemn and dispose at either afloat or ashore intermediate levels. (Navy only)
K -	Reparable item. Condemnation and disposal to be performed at contractor facility

NSN (Column (3)). The NSN for the item is listed in this column.

CAGEC (Column (4)). The Commercial and Government Entity Code (CAGEC) is a five-digit code which is used to identify the manufacturer, distributor, or Government agency/activity that supplies the item.

Source: https://assist.dla.mil -- Downloaded: 2016-12-09T23:32Z
Check the source to verify that this is the current version before use.

PART NUMBER (Column (5)). Indicates the primary number used by the manufacturer (individual, company, firm, corporation, or Government activity), which controls the design and characteristics of the item by means of its engineering drawings, specifications, standards, and inspection requirements to identify an item or range of items.

NOTE

When you use an NSN to requisition an item, the item you receive may have a different part number from the number listed.

DESCRIPTION AND USABLE ON CODE (UOC) (Column (6)). This column includes the following information:

1. The federal item name, and when required, a minimum description to identify the item.

2. Part numbers of bulk materials are referenced in this column in the line entry to be manufactured or fabricated.

3. Hardness Critical Item (HCI). A support item that provides the equipment with special protection from electromagnetic pulse (EMP) damage during a nuclear attack.

4. The statement END OF FIGURE appears just below the last item description in column (6) for a given figure in both the repair parts list and special tools list work packages.

QTY (Column (7)). The QTY (quantity per figure) column indicates the quantity of the item used in the breakout shown on the illustration/figure, which is prepared for a functional group, subfunctional group, or an assembly. A "V" appearing in this column instead of a quantity indicates that the quantity is variable and quantity may change from application to application. ”

(MC) Include for Marine Corps manuals only.

“USMC QTY per Equip (Column (8)). This column accommodates the Marine Corps quantity per equipment requirement.”

“EXPLANATION OF CROSS-REFERENCE INDEXES WORK PACKAGES FORMAT AND COLUMNS

1. National Stock Number (NSN) Index Work Package. NSN’s in this index are listed in National Item Identification Number (NIIN) sequence.

STOCK NUMBER Column. This column lists the NSN in NIIN sequence. The NIIN consists of the last nine digits of the NSN. When using this column to locate an item, ignore the first four digits of the NSN. However, the complete NSN should be used when ordering items by stock number.

For example, if the NSN is 5385-01-574-1476, the NIIN is 01-574-1476.

FIG. Column. This column lists the number of the figure where the item is identified/located. The figures are in numerical order in the repair parts list and special tools list work packages.

Source: https://assist.dla.mil -- Downloaded: 2016-12-09T23:32Z
Check the source to verify that this is the current version before use.

ITEM Column. The item number identifies the item associated with the figure listed in the adjacent FIG. column. This item is also identified by the NSN listed on the same line.

2. Part Number (P/N) Index Work Package. Part numbers in this index are listed in ascending alphanumeric sequence (vertical arrangement of letter and number combinations which places the first letter or digit of each group in order A through Z, followed by the numbers 0 through 9 and each following letter or digit in like order).

PART NUMBER Column. Indicates the part number assigned to the item.

FIG. Column. This column lists the number of the figure where the item is identified/located in the repair parts list and special tools list work packages.

ITEM Column. The item number is the number assigned to the item as it appears in the figure referenced in the adjacent figure number column."

Include 3 if reference designator index is used.

"3. Reference Designator Index Work Package. Reference designators in this index are listed in ascending alphanumeric sequence (vertical arrangement of letter and number combination which places the first letter or digit of each group in order "A" through "Z," followed by the numbers "0" through "9" and each following letter or digit in like order).

REFERENCE DESIGNATOR Column. Indicates the reference designator assigned to the item.

FIG. Column. This column lists the number of the figure where the item is identified/located in the repair parts list or special tools list work package.

ITEM Column. The item number is the number assigned to the item as it appears in the figure referenced in the adjacent figure number column.

SPECIAL INFORMATION

UOC. The UOC appears in the lower left corner of the Description Column heading. Usable on codes are shown as "UOC:..." in the Description Column (justified left) on the first line under the applicable item/nomenclature. Uncoded items are applicable to all models. Identification of the UOCs used in the RPSTL are:

Code	Used On
PAA	Model M114
PAB	Model M114A
PAC	Model M114B”

Include appropriate UOC content, as applicable.

"Fabrication Instructions. Bulk materials required to manufacture items are listed in the bulk material functional group of this RPSTL. Part numbers for bulk material are also referenced in the Description Column of the line item entry for the item to be manufactured/fabricated. Detailed fabrication instructions for items source coded to be manufactured or fabricated are found in (enter applicable TM number).

Index Numbers. Items which have the word BULK in the figure column will have an index number shown in the item number column. This index number is a

Source: https://assist.dla.mil -- Downloaded: 2016-12-09T23:32Z
Check the source to verify that this is the current version before use.

cross-reference between the NSN / Part Number (P/N) Index work packages and the bulk material list in the repair parts list work package."

For a combined narrative-RPSTL manual associated publications shall not be included.

"Associated Publications. The publication(s) listed below pertains to the (enter item name):

Publication **Short Title**"

The following paragraph shall appear only in the field maintenance RPSTL special instructions.

"Illustrations List. The illustrations in this RPSTL contain field authorized items. Illustrations published in (enter applicable TM number for the higher maintenance level RPSTL, e.g., for field, below depot sustainment, etc.) that contain field authorized items also appear in this RPSTL. The tabular list in the repair parts list work package contains only those parts coded "F" in the third position of the SMR code, therefore, there may be a break in the item number sequence."

HOW TO LOCATE REPAIR PARTS

1. When NSNs or Part Numbers Are Not Known.

First. Using the table of contents, determine the assembly group to which the item belongs. This is necessary since figures are prepared for assembly groups and subassembly groups, and lists are divided into the same groups.

Second. Find the figure covering the functional group or the subfunctional group to which the item belongs.

Third. Identify the item on the figure and note the number(s).

Fourth. Look in the repair parts list work packages for the figure and item numbers. The NSNs and part numbers are on the same line as the associated item numbers.

2. When NSN Is Known.

First. If you have the NSN, look in the STOCK NUMBER column of the NSN index work package. The NSN is arranged in NIIN sequence. Note the figure and item number next to the NSN.

Second. Turn to the figure and locate the item number. Verify that the item is the one you are looking for.

3. When Part Number Is Known.

First. If you have the part number and not the NSN, look in the PART NUMBER column of the part number index work package. Identify the figure and item number.

Second. Look up the item on the figure in the applicable repair parts list work package.”

Include 4 only if the RPSTL has a reference designator index work package.

“4. When Reference Designator Is Known.

First. If you know the reference designator, look in the REFERENCE DESIGNATOR column of the reference designator index work package. Note the figure and item number.

Second. Turn to the figure and locate the item number. Verify that the item is the one you are looking for.

Source: https://assist.dla.mil -- Downloaded: 2016-12-09T23:32Z
Check the source to verify that this is the current version before use.

ABBREVIATIONS

Abbreviation	**Explanation”**
Include uncommon abbreviations used in the RPSTL. List/define those not found in ASME Y14.38.	

F.5.3.5.4A Indexed RPSTL illustration and legend **<figure>**. When specified by the acquiring activity an indexed RPSTL illustration and legend shall be added to the end of the introduction work package. Complex weapon systems have numerous repair parts lists associated to the equipment and the illustration and legend assists in locating the repair parts information. The indexed RPSTL illustration shall provide an exploded view of the equipment with index numbers pointing to the major functional groups. The illustration shall have a legend that defines the item number, major functional group figure title and figure number (Refer to FIGURE F-3).

F.5.3.6 Repair parts list work package **<plwp>**. Each repair parts list work package shall be prepared and consist of work package identification information **<wpidinfo>,** a figure, and its associated repair parts lists **<pi.category>**. Refer to FIGURE F-4 and FIGURE F-5 for examples of a repair parts list work package and a repair parts list illustration. For less complex equipment with a small RPSTL, the RPSTL can be contained in a single work package or a few work packages each with multiple figures/lists. For complex equipment, each RPSTL work package shall have one figure and one parts list. The figure can have multiple sheets. The repair parts list(s) shall be listed in the format and data requirements in F.5.3.6.1 through F.5.3.6.3.2.8 (Refer to FIGURE F-5). For simple equipment or large functional groups, multiple repair parts lists can be included in a single work package.

F.5.3.6.1 Work package identification information **<wpidinfo>**. Work package identification information is required for this work package (refer to 4.7.9.1).

F.5.3.6.2 Initial setup information. Initial setup information is not required for this work package.

F.5.3.6.3 Repair parts list **<pi.category>**. The repair parts lists shall have a figure <figure> and a list of repair part items **<pi.item>** as specified in F.5.3.6.3.1 and F.5.3.6.3.2.

F.5.3.6.3.1 Repair parts figure title **<title>**. When available, figure titles shall be taken from provisioning documentation. The RPSTL figure title, the functional group title and the applicable MAC title shall be the same. When there is no provisioning documentation, the acquiring activity or contractor shall develop a title. This title shall be used consistently throughout the TM.

F.5.3.6.3.2 Repair part item **<pi.item>**. Each repair part shall include the column requirements in F.5.3.6.3.2.1 through F.5.3.6.3.2.8. Each repair may also include the optional items in F.5.3.6.3.2.9 through F.5.3.6.3.2.15.

F.5.3.6.3.2.1 Item number column **<callout>**. Items shall be listed on the repair parts list (in the ITEM NO. column) by the same callout number shown on the associated figure. The items shall be listed in ascending alphanumeric sequence.

Source: https://assist.dla.mil -- Downloaded: 2016-12-09T23:32Z
Check the source to verify that this is the current version before use.

F.5.3.6.3.2.2 SMR code column **<smr>**. The SMR code column shall include SMR codes assigned to the applicable items. For multiple service TMs, the SMR code column shall be subdivided into subcolumns, one for each service involved. Each service shall identify the appropriate SMR code subentry. When services share the same SMR code for an item, the SMR code shall be listed for each service.When developed as a multiple service TM, each service shall have identified the appropriate SMR code.

F.5.3.6.3.2.3 NSN column **<nsn>**. The NSN column shall include the NSN assigned to the applicable item.

F.5.3.6.3.2.4 Commercial and Government Entity Code (CAGEC) **<cageno>** column. The applicable five-digit CAGEC number, as listed in Catalog Handbook H4/H8, shall appear in the CAGEC column.

F.5.3.6.3.2.5 Part number **<partno>** column. The part number is listed in the PART NUMBER column.

F.5.3.6.3.2.6 Description and UOC column. The DESCRIPTION AND USABLE ON CODE (UOC) column shall include the following information.

a. Functional group header **<fncgrp>**. The functional group header shall precede the first repair part item in the description column. The header shall consist of the functional group number and title **<fnccode>** appearing on the top line(s). The next line(s) below shall include the figure number and the figure title **<fnctitle>**.

b. Item name. The item name shall consist of the federal item name **<name>** (taken from Federal Supply Cataloging Handbook H6) and, if necessary, a minimum description **<desc>** to further identify the item. When provisioning data is used, the **<desc>** shall consist of the data from the provisioning document. If the item is a Hardness Critical Item, the symbol HCI shall precede the item name.

c. Indentions. The item name listed in the DESCRIPTION AND USABLE ON CODE (UOC) column shall be indented to show components of assemblies and next higher assemblies. (Refer to FIGURE F-6.)

d. UOC **<uoc>**. When an item has multi-configurations or multi-models use, the three-position alphanumeric UOC representing the applicable configuration in which the item is used shall be placed on the last line under the item description. The letters "UOC:" followed by the applicable UOC shall be indented. (Refer to FIGURE F-6.) When an item is used on all configurations or when only one configuration is covered by the RPSTL, UOCs shall not be shown.

e. Serial number application **<usbefserno>**. When part numbers of spare/repair items are not the same for all serial numbered equipment of the same model, a statement identifying the Usable Effective (USBL EFF) serial numbers shall be placed on the last line under the item description. The letters “USBL EFF” followed by the applicable serial numbers shall be indented. (e.g., USBL EFF SER NOS 1719-1941). When an item is used on all models or when only one configuration is covered by the RPSTL, serial number shall not be shown.

Source: https://assist.dla.mil -- Downloaded: 2016-12-09T23:32Z
Check the source to verify that this is the current version before use.

f. Assembled items. Spare and repair parts that are part of a nonstocked assembled item (source coded "AO", "AF", "AH", or "AD") shall be assigned item numbers on illustrations and shall be listed in item number sequence on the repair parts list. These items/parts shall be listed immediately below the item to be assembled on the repair parts list. When a particular illustration does not show the parts breakdown of the nonstocked assembly, reference shall be made to the breakdown illustration in the RPSTL. Instructions, drawings, charts, and tables showing how to assemble assemblies source coded "A( )" shall not appear in the RPSTL, but shall appear in the narrative maintenance TM.

g. Manufactured items. All items source coded "MO", "MF", "MH", or "MD" shall have the statement in the DESCRIPTION AND USABLE ON CODE (UOC) column **<desc>** as follows: "MAKE FROM (enter applicable bulk material or other replaceable item name, CAGEC, and part number)." Material that is used to make items shall also be shown in a separate bulk items work package **<bulk_itemswp>** (see F.5.3.8). Instructions, drawings, charts, and tables required to show how items are made shall not be contained in the RPSTL but shall appear in the narrative maintenance TM. This is normally specified in the illustrated list of manufactured items **<manuwp>** (see E.5.3.9) when it is specified by the acquiring activity.

h. Kits and kit repair parts. Kits and repair parts (source coded "KD", "KF", or "KB") shall conform to the format of either option 1 (see FIGURE F-7) or option 2 (see FIGURE F-8), as specified by the acquiring Activity. Only one option is to be used in a weapons systems RPSTL listings.

(1) Option 1 (kits). Option 1 kits shall appear at the end of the associated parts list. As specified by the acquiring activity, the ITEM NO. column <**callout**> for kits shall be either left blank or list an alphabetical character(s). The QTY column <**qty**> for kits shall be a V (variable) when the exact quantity may vary. (Refer to FIGURE F-7.)

(2) Option 1 (parts) **<kititem>**. Option 1 kit repair parts shall be listed with their applicable figure and appear in item number sequence. The statement "part of Kit P/N (enter kit P/N)" shall follow item name **<name>**. Kit repair parts shall also be listed under the kit list at the end of the parts list (Refer to FIGURE F-8). Parts of the kit list shall be indented and listed alphabetically by item name or in item number sequence immediately below the kit item name. The quantity **<qty>** (in parentheses), figure number, and item number **<callout>** shall follow the repair part item name.

(3) Option 2 (kits) **<kitswp>**. Option 2 kits shall be listed in the kit parts list work package **<kitswp>** (see F.5.3.4).

(4) Option 2 (parts) **<pi.item>**. Option 2 kit repair parts shall appear in the parts list by item number as shown on the associated figure. They shall be listed in item number sequence. The statement "PART OF KIT P/N *(enter kit part number)*" shall follow the item name.

i. End of work package statement. The statement "**END OF FIGURE"** shall appear below the last item described in the column for each figure of the tabular lists in the repair parts list and the special tools list work packages.

Source: https://assist.dla.mil -- Downloaded: 2016-12-09T23:32Z
Check the source to verify that this is the current version before use.

F.5.3.6.3.2.7 Quantity column **<qty>**. The number in the QTY column shall represent the number of times the item appears in the illustration/figure with the associated item number. When a definite quantity cannot be determined because the number of uses per equipment or the size/length of an item may vary, with each equipment, the letter V shall be placed in the left position of the QTY column.

F.5.3.6.3.2.8 (MC) USMC Quantity per equipment column. The number in the USMC QTY Per Equip column shall represent the total number of times the part appears in all the repair parts lists.

F.5.3.6.3.2.9 Mandatory Replacement <**manrep**>. Information on mandatory replacement may be included.

F.5.3.6.3.2.10 Unit of Measure <**um**>. The unit of measure for the item may be included.

F.5.3.6.3.2.11 Unit of Issue <**ui**>. The unit of issue for the item may be included.

F.5.3.6.3.2.12 Reference Designator <**refdes**>. The reference designator for the item may be included.

F.5.3.6.3.2.13 Next Higher Assembly <**nha**>. Information on the next higher assembly may be included.

F.5.3.6.3.2.14 Parts Breakdown Reference <**parts.breakdown.ref**>. A reference to parts breakdown for the item may be included.

F.5.3.6.3.2.15 Other characteristics <**otherchar**>. Any other information not previously covered may be included as required.

F.5.3.6.4 Basic Issue Items (BII) (repair parts). Repair parts for reparable BII that do not have separate operator TMs, but are authorized for the RPSTL, shall be listed in a functional group titled **<fnctitle>** BASIC ISSUE ITEMS (REPAIR PARTS). Items listed in functional and subfunctional groups shall be listed and identified with the same basic columnar data required for the end item repair parts. BII shall be supported by illustrations.

F.5.3.6.5 Expendable and durable items. Expendable and durable items shall not be listed in the RPSTL. These items shall appear in the expendable and durable items work package **<explistwp>** (see G.5.6) in the Support Information Chapter.

F.5.3.7 Repair parts for special tools list work package **<stl_partswp>**. The special tools repair parts list work package shall be prepared when all of the following conditions in a through c are met. The work package shall follow the last repair parts list work package **<plwp>** and shall precede the kit parts list work package **<kitswp>** and bulk items work package **<bulk_itemswp>**. The work package data requirements are specified in F.5.3.7.1 through F.5.3.7.3.

a. The RPSTL identifies special tools in the special tools list work package (see F.5.3.10).
b. The special tool has repair parts that may be replaced at any maintenance level covered in the TM.
c. The special tool does not have repair instructions and parts listed in another technical manual for the special tool.

F.5.3.7.1 Work package identification information **<wpidinfo>**. Work package identification information is required for this work package (refer to 4.7.9.1).

Source: https://assist.dla.mil -- Downloaded: 2016-12-09T23:32Z
Check the source to verify that this is the current version before use.

F.5.3.7.2 Initial setup information. Initial setup information is not required for this work package.

F.5.3.7.3 Special tools repair parts items list **<pi.category>**. The special tools repair parts items list requirements in F.5.3.6.3.2 shall be used except as specified in F.5.3.7.3.1.

F.5.3.7.3.1 Functional group header **<fncgrp>**. The functional group header shall precede the first special tools repair part item in the DESCRIPTION AND USABLE ON CODE (UOC) column. The functional group number and title **<fnccode>** shall be "SPECIAL TOOLS (REPAIR PARTS)" appearing on the top line(s). The next line(s) below shall be the figure number and the figure title **<fnctitle>**.

F.5.3.8 Kit parts list work package **<kitswp>**. A kits parts work package **<kitswp>** (refer to FIGURE F-8) shall be prepared when kit parts are listed separately in accordance with F.5.3.6.3.2.5.h(3) (Option 2 (kits)). The work package shall follow the last repair parts list work package **<plwp>** or repair parts for special tools list work package **<stl_partswp>**, when provided, and shall precede the bulk items list work package **<bulk_itemswp>**, if provided. The work package consists of one or more kits part item lists **<pi.category>** organized by functional group. The work package data requirements are specified in F.5.3.8.1 through F.5.3.8.3.

F.5.3.8.1 Work package identification information **<wpidinfo>**. Work package identification information is required for this work package (refer to 4.7.9.1).

F.5.3.8.2 Initial setup information. Initial setup information is not required for this work package.

F.5.3.8.3 Kits part items list **<pi.category>**. The kits part items list shall be listed alphanumerically by part number in the PART NUMBER column. The requirements defined in F.5.3.6.3 shall be used except as specified in F.5.3.8.3.1 through F.5.3.8.3.3.

F.5.3.8.3.1 Functional group header **<fncgrp>**. The functional group header shall precede the first bulk item in the DESCRIPTION AND USABLE ON CODE (UOC) column. The functional group number and title **<fnccode>** shall be "REPAIR KITS" appearing on the top line(s). The next line(s) below shall be the figure number and the figure title **<fnctitle>**.

F.5.3.8.3.2 Kit part item group **<kititem>**. Parts in the kit group, in the DESCRIPTION AND USABLE ON CODE (UOC) column, shall be indented two positions and listed alphabetically by item name or in item number sequence under their kit name. Kit parts shall be listed by item names **<name>**, the quantity (in parentheses) **<qty>**, the figure number, and the item numbers **<callout>** that appear in the basic parts list.

F.5.3.8.3.3 Kits part item quantity **<qty>**. The QTY column entry for kits part shall contain a V (variable) when the exact quantity may vary.

F.5.3.9 Bulk items work package **<bulk_itemswp>**. A bulk items work package shall be prepared whenever bulk items are required in the repair of any parts listed in a parts list, special tool list or repair kit. The work package shall not have an illustration. The work package data requirements are specified in F.5.3.9.1 through F.5.3.9.3.

F.5.3.9.1 Work package identification information **<wpidinfo>**. Work package identification information is required for this work package (refer to 4.7.9.1).

Source: https://assist.dla.mil -- Downloaded: 2016-12-09T23:32Z
Check the source to verify that this is the current version before use.

F.5.3.9.2 Initial setup information. Initial setup information is not required for this work package.

F.5.3.9.3 Bulk item <**pi.item**>. Items in the bulk items list shall be listed alphabetically by item name in the DESCRIPTION AND USABLE ON CODE (UOC) column. (Refer to FIGURE F-9.) The requirements defined in F.5.3.6.3.2 shall be used except as specified in F.5.3.9.3.1 and F.5.3.9.3.2.

F.5.3.9.3.1 ITEM column <**callout**>. Numbers in the ITEM column of bulk material list apply to the FIG. BULK only and shall not be associated with item numbers (callouts appearing on the illustrations/figures).

F.5.3.9.3.2 Functional group header <**fncgrp**>. The functional group header shall precede the first bulk item in the DESCRIPTION AND USABLE ON CODE (UOC) column. The functional group number and title <**fnccode**> shall be “BULK MATERIAL” appearing on the top line(s). The next line(s) below shall be the figure number and the figure title <**fnctitle**> and titled “FIG. BULK”.

F.5.3.10 Special tools list work package <**stlwp**>. A special tools list work package shall be prepared for special tools, special TMDE, and other special support equipment authorized for maintenance of the end item/assembly (Refer to FIGURE F-10). All repair parts for special tools listed in this work package that have their own TM shall not be listed in the repair parts for special tools list work package (see F.5.3.7). These tools shall be listed in the format and data requirement in F.5.3.10.1 through F.5.3.10.3.6.

F.5.3.10.1 Work package identification information <**wpidinfo**>. Work package identification information is required for this work package (refer to 4.7.9.1).

F.5.3.10.2 Initial setup information. Initial setup information is not required for this work package.

F.5.3.10.3 Special tools list <**pi.category**>. The special tools list requirements in F.5.3.6.3 shall be used except as specified in F.5.3.10.3.1 through F.5.3.10.3.5.

F.5.3.10.3.1 Item number column. Items shall be listed on the special tools list (in the ITEM NO. column) by the same callout number shown on the associated figure. The items shall be listed in ascending alphanumeric sequence.

F.5.3.10.3.2 Functional group header <**fncgrp**>. The functional group header shall precede the first bulk item in the DESCRIPTION AND USABLE ON CODE (UOC) column. The functional group number and title <**fnccode**> shall be “SPECIAL TOOLS” appearing on the top line(s). The next line(s) below shall be the figure number and the figure title <**fnctitle**>.

F.5.3.10.3.3 D-coded items. When a depot level RPSTL does not exist and items are maintained at depot level, they shall be identified with a "D" in the third position of the SMR code in the highest level RPSTL prepared.

F.5.3.10.3.4 Basis of Issue (BOI) <**boi**>. The BOI <**boi**> shall be placed on the last line under the item description, in the DESCRIPTION AND USABLE ON CODE (UOC) column, for individual items, sets, or kits. The BOI shall indicate the quantity of the items, i.e., sets, or kits authorized to support a quantity of end items/assembly(s) or a specific military unit. For example, BOI: 1 auth for 1-12 equip or BOI: 1 per BN HQ when BN has SVC CO.

Source: https://assist.dla.mil -- Downloaded: 2016-12-09T23:32Z
Check the source to verify that this is the current version before use.

F.5.3.10.3.5 Quantity column. The QTY column shall be left blank.

F.5.3.10.3.6 Components list **<kititem>**. Components of special tool sets and kits, in the DESCRIPTION AND USABLE ON CODE (UOC) column, shall be listed in figure and item number sequence <**callout**>. The component shall be indented two positions and listed by item name **<name>**, the figure number, and the item numbers <**callout**>. Quantities of components **<qty>** shall be included in BOI statement (see F.5.3.10.3.3).

F.5.3.11 Cross-reference index work packages.

F.5.3.11.1 National stock number (NSN) index work package **<nsnindxwp>**. This work package (Refer to FIGURE F-11) shall be prepared. The index (**standard information**) shall be in ascending numeric sequence by the National Item Identification Number (NIIN) (the last nine digits of the NSN). This index shall be listed in the format and data requirement in F.5.3.11.1.1 through F.5.3.11.1.3.

F.5.3.11.1.1 Work package identification information **<wpidinfo>**. Work package identification information is required for this work package (refer to 4.7.9.1).

F.5.3.11.1.2 Initial setup information. Initial setup information is not required for this work package.

F.5.3.11.1.3 NSN index **<nsnindx>**. Each line entry **<nsnindxrow>** shall list the complete NSN for each NSNs assigned to applicable repair part or special tool items figure number and item number **<callout>**. The NSN **<nsn>** line entry shall identify the first figure number and item number **<callout>** for which the stock number is applicable. The NSN shall not be repeated on the same page of the index for each additional figure number and item number **<callout>** identified by that NSN. When NSN references carry over to another page, the carried over NSN entry shall appear at the top of the list.

F.5.3.11.2 Part number index work package **<pnindxwp>**. This work package (refer to FIGURE F-12) shall be prepared. The index (**standard information**) shall be in ascending numeric sequence by part number. This index shall be listed in the format and data requirement in F.5.3.11.2.1 through F.5.3.11.2.3.

F.5.3.11.2.1 Work package identification information **<wpidinfo>**. Work package identification information is required for this work package (refer to 4.7.9.1).

F.5.3.11.2.2 Initial setup information. Initial setup information is not required for this work package.

F.5.3.11.2.3 Part number index **<pnindx>**. Each line entry **<pnindxrow>** shall list each part numbers assigned to applicable repair part or special tool items figure number and item number **<callout>**. The part number **<partno>** line entry shall identify the first figure number and item number **<callout>** for which the part number is applicable. The part number shall not be repeated on the same page of the index for each additional figure number and item number **<callout>** identified by that part number. When part number references carry over to another page, the carried over part number entry shall appear at the top of the list.

F.5.3.11.3 Reference designator index work package **<refdesindxwp>**. A reference designator work package (refer to FIGURE F-13) shall be prepared as required. The index (**standard information**) shall be in alphanumeric sequence by reference designators. This index shall be listed in the format and data requirement in F.5.3.11.3.1 through F.5.3.11.3.3.

Source: https://assist.dla.mil -- Downloaded: 2016-12-09T23:32Z
Check the source to verify that this is the current version before use.

F.5.3.11.3.1 Work package identification information **<wpidinfo>**. Work package identification information is required for this work package (refer to 4.7.9.1).

F.5.3.11.3.2 Initial setup information. Initial setup information is not required for this work package.

F.5.3.11.3.3 Reference designator index **<refdesindx>**. Each line entry **<refdesindxrow>** shall list each reference designators assigned to applicable repair part or special tool items figure number and item number **<callout>**. The reference designator **<refdes>** line entry shall identify the first figure number and item number **<callout>** for which the reference designators is applicable. The reference designators shall not be repeated on the same page of the index for each additional figure number and item number **<callout>** identified by that reference designator. When reference designator references carry over to another page, the carried over reference designator entry shall appear at the top of the list.

F.5.3.11.4 Bulk figure reference. When entries in either the NSN or part number index references bulk material, the word “BULK” shall appear in the FIG. column. The numbers in the ITEM No. column shall refer to the item number list in the bulk figure located in the bulk functional group list and shall not refer to item numbers on an illustration.

F.5.3.11.5 Sets and kits. Part numbers for sets/kits shall be cross-referenced to NSN, figure, and item number for the set/kit. When Option 1 is selected, the ITEM column shall either be left blank or list an alphabetical character (e.g., "K" for KIT, "S" for SET, etc.). (Refer to F.5.3.6.3.2.6.h(1).) When Option 2 is selected, the FIG. column shall list the word KITS or SETS, as applicable. (Refer to F.5.3.6.3.2.5.h(3).)

F.5.3.12 Illustrations. Additional RPSTL specific illustration requirements are described in F.5.3.12.1 through F.5.3.12.4.

F.5.3.12.1 Arrangement of illustrations. All illustrations prepared for spares, repair parts, special tools, special TMDE, and other special support equipment shall be arranged in figure number sequence. They shall precede their companion parts list (on the left-hand page preceding the parts list or at the top of the same page of the parts list). For page-based manuals, you can maintain the facing page format by putting just the work package identification information on page one of the work package followed by the illustration on page two. Illustrations shall not be duplicated to provide facing page illustrations for the second and subsequent pages of the companion parts list. Illustrations shall not be duplicated to show different models or configurations of an assembly when UOCs can be assigned to indicate differences in configurations.

F.5.3.12.2 Use of illustrations. Foldout and foldout-foldup illustrations shall not be used in RPSTLs. References to illustrations in other TMs or to illustrations in the narrative portion of a combined maintenance TM with a RPSTL shall not be made. Landscape pages shall not be prepared except for RPSTLs supporting nuclear weapons (regulated by the Department of Energy/Defense Nuclear Agency). For clarity, multisheet illustrations may be used.

F.5.3.12.3 Identical parts/item numbers. Identical parts (same part number) appearing in a figure (illustration) having only one FGC shall have the same item number. If a figure has two or more FGCs/assemblies, only the identical parts with identical SMR codes within each FGC/assembly shall have the same item number.

Source: https://assist.dla.mil -- Downloaded: 2016-12-09T23:32Z
Check the source to verify that this is the current version before use.

F.5.3.12.4 Identical assemblies. When two or more identical assemblies (same part number) exist in different places, i.e., in the equipment, a breakdown of the parts shall be illustrated only once, i.e., the first time the assembly appears in the RPSTL. For subsequent times that the identical assembly appears, the assembly item name shall appear in the description and UOC column and be followed by the statement “SEE FIG ## FOR BREAKDOWN”.

F.6 NOTES.

The notes in section 6 apply to this appendix.

Source: https://assist.dla.mil -- Downloaded: 2016-12-09T23:32Z
Check the source to verify that this is the current version before use.

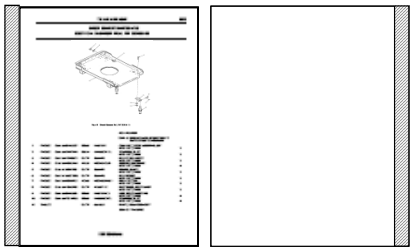

Combined Illustration and Part List

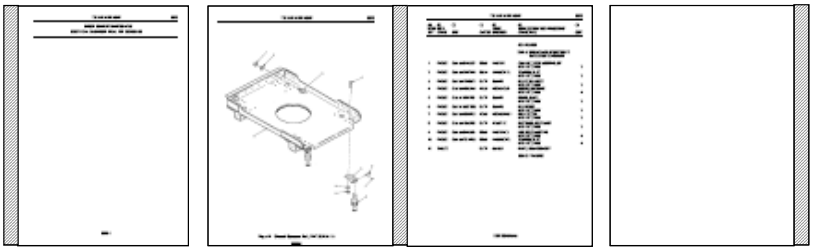

Single Sheet Illustration

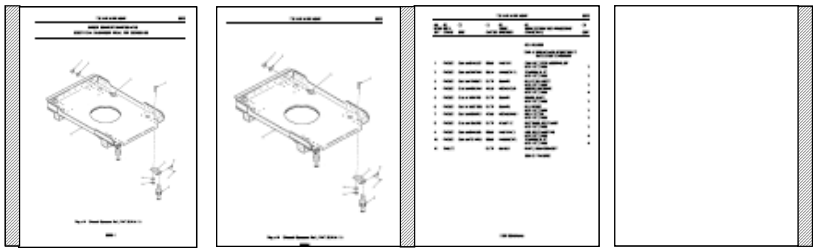

Two Sheet Illustrations

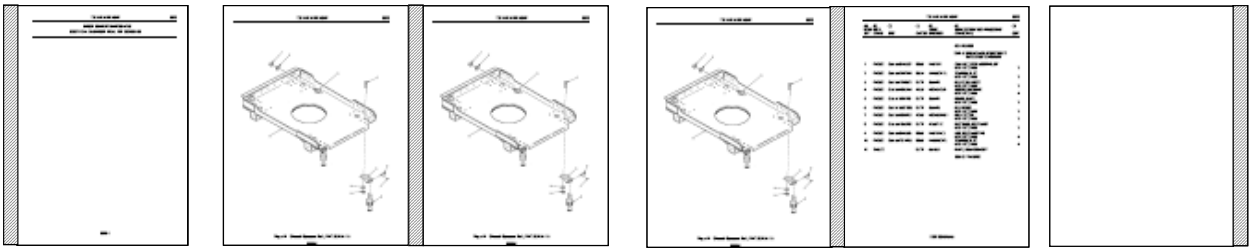

Three Sheet Illustrations

FIGURE F-1. RPSTL page layout scenarios.

Source: https://assist.dla.mil -- Downloaded: 2016-12-09T23:32Z
Check the source to verify that this is the current version before use.

0001

FIELD MAINTENANCE

M198 HOWITZER

INTRODUCTION

SCOPE

This RPSTL lists and authorizes spares and repair parts; special tools; special test, measurement, and diagnostic equipment (TMDE); and other special support equipment required for performance of field maintenance of the M198 howitzer. It authorizes the requisitioning, issue, and disposition of spares, repair parts, and special tools as indicated by the source, maintenance, and recoverability (SMR) codes.

GENERAL

In addition to the Introduction work package, this RPSTL is divided into the following work packages.

1. Repair Parts List Work Packages. Work packages containing lists of spares and repair parts authorized by this RPSTL for use in the performance of maintenance. These work packages also include parts which must be removed for replacement of the authorized parts. Parts lists are composed of functional groups in ascending alphanumeric sequence, with the parts in each group listed in ascending figure and item number sequence. Sending units, brackets, filters, and bolts are listed with the component they mount on. Bulk materials are listed by item name in FIG. BULK at the end of the work packages. Repair parts kits are listed separately in their own functional group and work package. Repair parts for reparable special tools are also listed in a separate work package. Items listed are shown on the associated illustrations.
2. Special Tools List Work Packages. Work packages containing lists of special tools, special TMDE, and special support equipment authorized by this RPSTL (as indicated by Basis of Issue (BOI) information in the DESCRIPTION AND USABLE ON CODE (UOC) column). Tools that are components of common tool sets and/or Class VII are not listed.
3. Cross-Reference Indexes Work Packages. There are 3 cross reference indexes work packages in this RPSTL: the National Stock Number (NSN) Index work package, the Part Number (P/N) Index work package, and the Reference Designator Index work package. The National Stock Number Index work package refers you to the figure and item number. The Part Number Index work package refers you to the figure and item number. The Reference Designator Index work package refers you to the figure and item number.

EXPLANATION OF COLUMNS IN THE REPAIR PARTS LIST AND SPECIAL TOOLS LIST WORK PACKAGES

ITEM NO. (Column (1)). Indicates the number used to identify items called out in the illustration.

SMR CODE (Column (2)). The SMR code containing supply/requisitioning information, maintenance level authorization criteria, and disposition instruction, as shown in the following breakout:

Table 1. SMR Code Explanation

Source Code	Maintenance Code		Recoverability Code
XX	XX		X
1st two positions:	3rd position:	4th position:	5th position:
How to get an item.	Who can install, replace, or use the item.	Who can do complete repair* on the item	Who determines disposition action on unserviceable items.

*Complete Repair: Maintenance capacity, capability, and authority to perform all corrective maintenance tasks of the "Repair" function in a use/use environment in order to restore serviceability to a failed item.

Source Code. The source code tells you how you get an item needed for maintenance, repair, or overhaul of an end item/equipment. Explanations of source codes follow:

Source Code	Application/Explanation
PA	Stock items; use the applicable NSN to

0001-1

FIGURE F-2. Example of an introduction work package.

Source: https://assist.dla.mil -- Downloaded: 2016-12-09T23:32Z
Check the source to verify that this is the current version before use.

0001

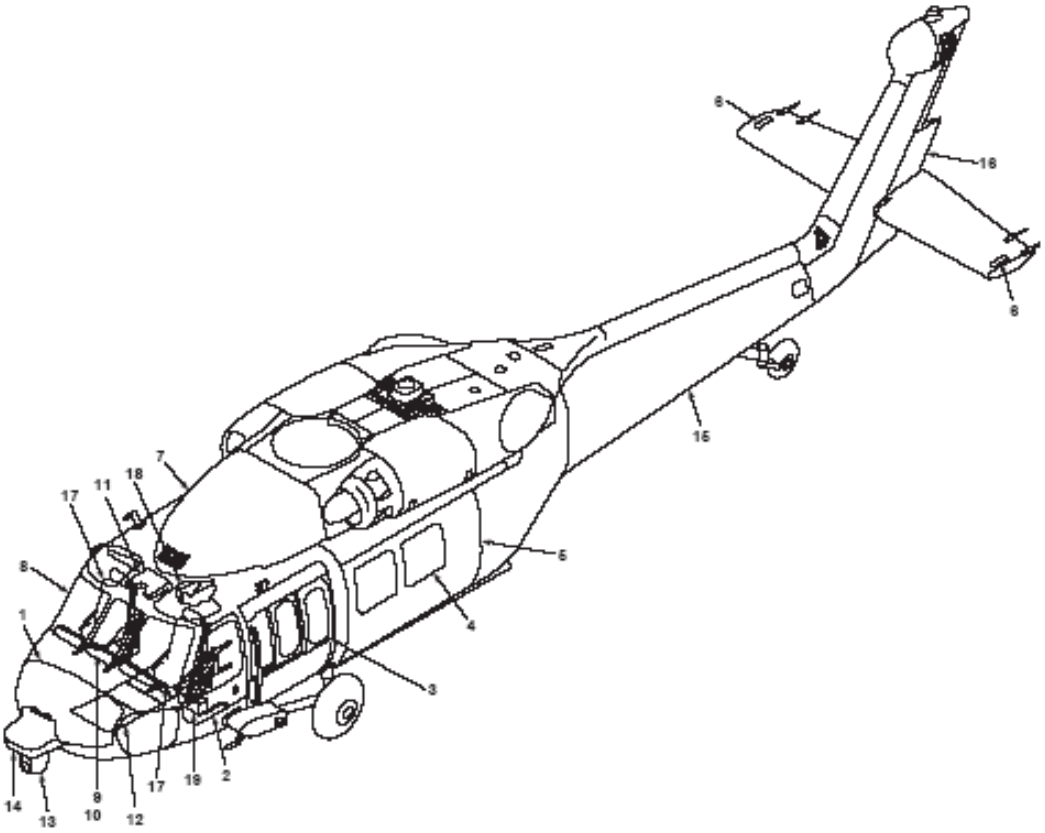

INDEX NO.	FIGURE TITLE	FIGURE NO.
1	Door Installation, Nose Section	4
2	Door Installation, Crew Nose Section	5
3	Gunners Window	13
4	Window Panel, Jettisonable, Cargo Door UH−60Q	26
5	Door Installation, Troop/Cargo	25
6	Stabilator Installation, Tail Rotor Pylon Horizontal	42
7	Stabilator Installation, Tail Rotor Pylon Horizontal	56
8	Windshield Installation, Cockpit	65
9	Instrument Installation, Cockpit	66
10	Instrument Panel Installation UH−60Q	67
11	Console Installation, Overhead	78
12	PM Equipment Bay, Lower	99
13	FLIR Turret Installation	109
14	FLIR Installation	110
15	Tail Cone Assembly	187
16	Tail Rotor Pylon Assembly	200
17	Seat Installation, Pilot And Copilot	213
18	Seat Installation, Troop And Gunner	230
19	Battery Installation	279

Figure 1. Exploded View, UH-60A, UH-60L, UH-60Q HH-60L and EH-60A Helicopter Airframe

0001-2

FIGURE F-3. Example of an Indexed RPSTL Illustration and Legend.

Source: https://assist.dla.mil -- Downloaded: 2016-12-09T23:32Z
Check the source to verify that this is the current version before use.

TM X-XXXX-XXX-24P 0092

FIELD AND SUSTAINMENT MAINTENANCE
ELECTRICAL EQUIPMENT RACK, FMT 3234023-100

0092-1

FIGURE F-4. Example of a repair parts list illustration.

Source: https://assist.dla.mil -- Downloaded: 2016-12-09T23:32Z
Check the source to verify that this is the current version before use.

0092

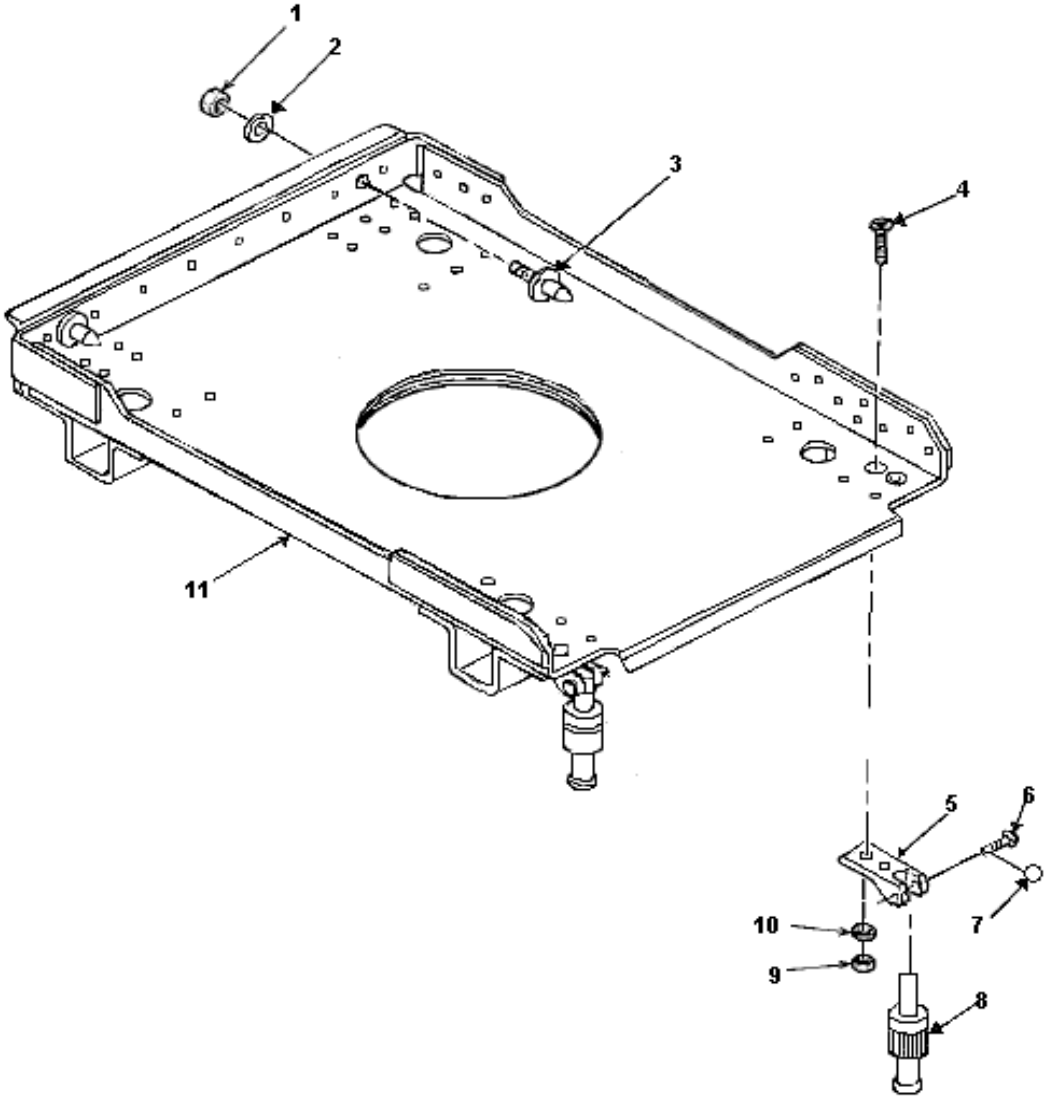

Figure 91. Electrical Equipment Rack, FMT 3234023-100

0092-2

FIGURE F-4. Example of a repair parts list illustration -Continued

Source: https://assist.dla.mil -- Downloaded: 2016-12-09T23:32Z
Check the source to verify that this is the current version before use.

0092

(1) ITEM NO.	(2) SMR CODE	(3) P NSN	(4) CAGEC	(5) ART NUMBER	(6) D ESCRIPTION AND USABLE ON CODE (UOC)	(7) QTY
					GROUP 6025	
					FIG. 91 RACK, ELECTRICAL EQUIPMENT, FMT 3234023-100	
1	PACZZ	5310-00-894-3637	80205	NAS1291CAM	NUT, SELF-LOCKING, EX UOC: DCT, DCU	2
2	PACZZ	5310-00-515-7449	88044	AN960C416L	WASHER, FLAT UOC: DCT, DCU	2
3	PACZZ	5315-00-127-6098	82577	3210472	PIN, REAR GUIDE UOC: DCT, DCU	2
4	PACZZ	5305-00-958-3409	96906	MS24694S52	SCREW, MACHINE UOC: DCT, DCU	4
5	PACZZ	5340-01-257-1761	82577	3210471	HINGE, RACK UOC: DCT, DCU	2
6	PACZZ	5315-01-006-7063	82577	3210473	PIN, HINGE UOC: DCT, DCU	2
7	PACZZ	5315-00-268-2478	96906	MS24665-1011	PIN, COTTER UOC: DCT, DCU	2
8	PACZZ	5340-00-132-3716	82577	964037-1C	FASTENER, SELF LOCK UOC: DCT, DCU	2
9	PACZZ	5310-00-844-3302	80205	NAS1291C3	NUT, SELF LOCKING UOC: DCT, DCU	4
10	PACZZ	5310-00-761-9463	80205	NAS620C10L	WASHER, FLAT UOC: DCT, DCU	4
11			82577	6019031	RACK, SUBASSEMBLY	
					END OF FIGURE	

0092-3

FIGURE F-5. Example of a repair parts list work package.

Source: https://assist.dla.mil -- Downloaded: 2016-12-09T23:32Z
Check the source to verify that this is the current version before use.

(1) ITEM NO.	(2) SMR CODE	(3) NSN	(4) CAGEC	(5) PART NUMBER	(6) DESCRIPTION AND USABLE ON CODE (UOC)	(7) QTY
					GROUP 14 ENGINE ASSEMBLY	
					FIG. 24 OIL PUMP ASSEMBLY	
					. BOLT MACHINE	1
					. WASHER LOCK	1
					. STRAINER, PUMP	1
					. PUMP, ROTARY	1
					. . REGULATOR PRESS	1
					. . WASHER, KEY	1
					. . SPACER, RING	5
					. . GEAR, OIL PUMP	1
					. . BOLT, MACHINE CAP SCREW 1/4-20X1-3/8 INCH	5
					. . WASHER, LOCK, 1/4 IN MEDIUM SAE	1
					. . LOCKWASHER, STEEL	2
					. . SCREW, COVER	2
					. . COVER, PUMP	2
					. . PUMP, OIL BSC	6
					. . . GEAR, DR SHAFT	1
					. . . BODY ASSY	1
					. . . SHAFT, IDLER	1
					. . . . BODY, PUMP	1
					END OF FIGURE	

FIGURE F-6. Example of indentions (next higher assembly).

Source: https://assist.dla.mil -- Downloaded: 2016-12-09T23:32Z
Check the source to verify that this is the current version before use.

0011

(1) ITEM NO.	(2) SMR CODE	(3) NSN	(4) P CAGEC	(5) ART NUMBER	(6) DESCRIPTION AND USABLE ON CODE (UOC)	(7) QTY
					GROUP 15 AUXILIARY POWER UNIT	
					FIG. 10 T62T-2A, T62T-2A1 GAS TURBINE ENGINE	
1	PACDD	2835-00-906-6766	55820	37688-0	ENGINE, GAS TURBINE T62T-2A UOC: NB4	1
2	PACDD	2835-00-804-8316	55820	37688-1000	ENGINE, GAS TURBINE T62T-2A1 UOC: NB5	1
3	PACZZ	5310-00-877-5797	96906	MS21044N3	. NUT, SELF-LOCKING UOC: NB4, NB5	2
4	PACZZ		88044	AN960DD10	. WASHER, FLAT UOC: NB4, NB5, NB6	2
5	KACZZ	5330-00-263-8030	96906	MS29512-06	. PACKING, PREFORMED PART OF KIT P/N 31766-1	10
6	PACCC	2910-00-919-2021	58220	28022-4	. . NOZZLE ASSEMBLY STATOR UOC: NB4, NB5, NB6	1
7	KDCZZ	5330-00-961-1463	96906	MS35769-5	. . GASKET PART OF KIT P/N 31766-1 UOC: NB4, NB5, NB6	1
8	PACZZ		71895	970HE1UPPH	. . NOZZLE, STATOR UOC: NB4, NB5, NB6	1
9	KACZZ	5330-00-961-1463	55820	26793-1	. . GASKET PART OF KIT P/N 31766-1 UOC: NB4, NB5, NB6	1
	PACZZ		55820	31766-1	. . SEAL KIT, TURBINE	V
					GASKET (1) 10-7	
					GASKET (1) 10-9	
					PACKING, PREFORMED (10) 10-6	
					END OF FIGURE	

0011-3

FIGURE F-7. Example of kits breakdown option 1.

Source: https://assist.dla.mil -- Downloaded: 2016-12-09T23:32Z
Check the source to verify that this is the current version before use.

0134

(1) ITEM NO.	(2) SMR CODE	(3) NSN	(4) P CAGEC	(5) ART NUMBER	(6) DESCRIPTION AND USABLE ON CODE (UOC)	(7) QTY
					GROUP 94 REPAIR KITS	
					FIG. KITS	
1	PACZZ	2540-00-255-0775	78385	G704528	PARTS KIT, HEATER, VE PERSONNEL HEATER.....	1
					BURNER ASSEMBLY (1) 252-6	
					SCREW, MACHINE (1) 252-8	
2	PACZZ	2540-00-255-0777	78385	G704529	PARTS KIT, HEATER, VE PERSONNEL HEATER.....	1
					SCREW, MACHINE (1) 252-8	
					VAPORIZER (1) 252-11	
					WASHER, FLAT (1) 252-9	
					WASHER, FIBER (1) 252-10	
					WASHER, FLAT (1) 252-12	
					WICK (1) 252-13	
3	PAFZZ	2990-01-065-7617	19207	12259821	MOUNT, ENGINE TO BE INSTALLED ONLY AS A SET.....	1
					CAP, ENGINE MOUNT (1) 1-14	
					MOUNT, ENGINE (1) 1-18	
4	PAFZZ	4320-01-133-4069	62983	421242L	PARTS KIT, HYDRAULIC.....	1
					GASKET (1) 239-5	
					PACKING, PREFORMED (1) 239-4	
					PACKING, PREFORMED (1) 239-6	
					PACKING, SEAL (4) 239-8	
					PARTS KIT, ROTARY PU (2) 239-9	
					PARTS KIT, ROTARY PU (10) 239-10	
					PIN (20) 239-14	
					PLATE, INLET SUPPORT (1) 239-13	
					PLATE, OUTLET SUPPORT (1) 239-7	
					RETAINER, PACKING (1) 239-12	
					RING (1) 239-12	
					ROTOR (1) 239-11	
					SCREW (2) 239-15	
					END OF FIGURE	

0134-3

FIGURE F-8. Example of kits breakdown option 2.

Source: https://assist.dla.mil -- Downloaded: 2016-12-09T23:32Z
Check the source to verify that this is the current version before use.

0016

UNIT MAINTENANCE
GROUP 9501 BULK MATERIAL

(1) ITEM NO.	(2) SMR CODE	(3) NSN	(4) P CAGEC	(5) ART NUMBER	(6) DESCRIPTION AND USABLE ON CODE (UOC)	(7) QTY
					GROUP 9501 BULK MATERIAL FIG. BULK	
1	PACZZ	5330-00-982-5130	81349	MILC7637TYP2	ASBESTOS SHEET, WOVE	1
2	XBCZZ		19207	RRC271	CHAIN, WELDLESS	1
3	PACZZ	5975-00-285-0907	97030	LOOM 3/8 ID	CONDUIT, NONMETALIC	1
4	PACZZ	9340-00-142-6860	19207	11633348	GLASS, LAMINATED	1
5	PACZZ	9340-00-285-6775	19200	8635931	GLASS, LAMINATED	1
6	PFCZZ	4720-00-809-2429	30299	FT3548-5	HOSE, AIR DUCT	1
7	PAFZZ	4720-00-001-0093	81349	MIL-H-13531	NOSE ASSEMBLY, NONME	1
8	XBCZZ		85757	3250-0610	HOSE, NONMETALLIC	1
9	PAFZZ	4720-00-999-8994	01276	303-8	HOSE, NONMETALLIC	1
10	PACZZ	4720-00-951-2433	96909	MS521301A229R	HOSE, NONMETALLIC	1
11	PACZZ	4720-01-009-9058	85757	3250-1010	HOSE, NONMETALLIC	1
12	PACZZ	4720-00-683-8830	81349	MIL-H-8788-4	HOSE, NONMETALLIC	1
13	PACZZ	4720-00-999-4044	11083	3R7752	HOSE, PREFORMED	1
14	XBCZZ		81349	MIL-I-14511	INSULATION BOARD TH	1
15	PACZZ	9390-00-488-2106	19207	CPR102201	NONMETALLIC SPECIAL	1
16	PACZZ	5330-00-333-0313	81348	HHP151	RUBBER SHEET SOLID	1
17	XBCZZ		19207	10287823-7	RUBBER STRIP	1
18	PAFZZ	5330-01-040-8923	19207	CPR104394	SEAL, RUBBER CHANNEL	1
19	PAFZZ	5330-01-082-3792	19207	CPR102235	SEAL, RUBBER, SPECIAL	1
20	PACZZ	5330-01-082-3793	19207	CPR102232	SEAL, RUBBER, SPECIAL	1
21	PACZZ	5365-00-944-1871	19204	738942	SPACER, SLEEVE	1
22	PACZZ	4710-00-234-0701	19207	CPR103203-1	TUBE ASSEMBLY, METAL	1
23	PACZZ	4710-00-277-5524	19207	7036787	TUBE, METALIC	1
24	PACZZ	4710-00-277-5526	91340	D11076-4A7	TUBE, METALIC	1
25	PAFZZ	4710-00-006-1647	81348	QQ-T-830	TUBE, METALIC	1
26	PACZZ	4710-00-203-3174	16236	CS4710-0004GB	TUBE, METALIC	1
27	PACZZ	4710-00-335-2610	81349	M3520-B70E02G	TUBE, METALIC	1
28	PACZZ	4710-00-277-4515	81346	ASTM	B280 TUBE, METALIC	1
29	PACZZ	4710-00-203-3172	17590	305087-0116	TUBE, METALIC	1
30	XBCZZ		19207	CPR109328-1	TUBING	1

0016-1

FIGURE F-9. Example of a bulk material list.

Source: https://assist.dla.mil -- Downloaded: 2016-12-09T23:32Z
Check the source to verify that this is the current version before use.

0255

(1) ITEM NO.	(2) SMR CODE	(3) NSN	(4) P CAGEC	(5) ART NUMBER	(6) DESCRIPTION AND USABLE ON CODE (UOC)	(7) QTY
					GROUP 30 SPECIAL TOOLS	
					FIG. 254	
1	PECDD	6625-01-169-5333	80058	TS-3920A/ASM	TEST SET, STABILIZATION (BOI: 1 AUTH PER 15 AIRCRAFT)	
1	PECDD	6625-01-266-1636	80058	TS-3920B/ASM	TEST SET, STABILIZATION (BOI: 1 AUTH PER 15 AIRCRAFT)	
2	XBCZZ		80063	A3012556	WEDGE, 30/60/90 DEG. (BOI: 1 AUTH PER TEST SET)	
3	XBCZZ		80063	A3012557	WEDGE, 05/85/90 DEG. (BOI: 1 AUTH PER TEST SET)	
4	XBCZZ		80063	A3012558	PIN, ALIGNMENT (BOI: 1 AUTH PER TEST SET)	
5	XBCZZ		80063	A3012559	FIXTURE, PROTRACTOR (BOI: 1 AUTH PER TEST SET)	
					END OF FIGURE	

0255-3

FIGURE F-10. Example of a special tools list work package.

Source: https://assist.dla.mil -- Downloaded: 2016-12-09T23:32Z
Check the source to verify that this is the current version before use.

TM 9-1090-208-23P **0101**

UNIT MAINTENANCE
FIELD MAINTENANCE
NATIONAL STOCK NUMBER INDEX

STOCK NUMBER	FIG.	ITEM
5365-00-003-6807	4	4
5935-00-005-2826	3	1
5315-00-012-0123	65	1
5310-00-016-7216	28	12
5340-00-021-3495	77	20
	85	15
5310-00-027-7247	8	2
5310-00-030-0580	51	21
3110-00-034-5257	69	5
	72	5
	75	9
	77	8
	79	5
	81	10
	84	5
	85	3
5305-00-038-9048	45	27
5310-00-045-3296	77	25
	85	20
5310-00-045-4007	2	5
5305-00-052-6456	55	2
5310-00-054-0041	24	3
5305-00-054-5637	6	9
5305-00-054-5638	88	11
5305-00-054-5647	33	15
	51	25
5305-00-054-5648	10	1
	33	7
5305-00-054-5649	2	8
	29	13
	33	3
	51	15
	52	8
	89	3
5305-00-054-5650	51	3
5305-00-054-5651	9	5
	28	5
	90	1
5305-00-054-5652	52	1
5305-00-054-5653	28	6

STOCK NUMBER	FIG.	ITEM
5305-00-054-6653	89	17
5305-00-054-6654	28	23
	29	8
5305-00-054-6655	29	4
	88	21
5305-00-054-6657	29	18
5305-00-054-6666	51	29
5305-00-054-6669	1	10
5305-00-054-9263	60	4
5305-00-056-9961	9	3
	33	16
	88	35
5310-00-057-0573	33	8
	52	2
	90	2
5310-00-058-1823	29	1
	61	4
5315-00-058-6062	45	18
5305-00-059-3657	2	14
5305-00-059-3658	1	3
5305-00-059-3661	51	26
5310-00-061-7326	29	19
5305-00-066-7327	88	37
5305-00-066-7369	34	1
5365-00-067-3836	46	17
5305-00-068-0543	45	9
5365-00-068-8011	70	2
	80	2
5975-00-074-2072	61	12
	88	33
5970-00-074-8780	28	15
5320-00-076-4071	59	19
5360-00-079-1713	11A	2
5305-00-079-5835	51	22
	88	28
5306-00-080-1537	32	28
5305-00-103-2994	45	14
5905-00-104-8368	2	25
5306-00-106-6321	63	5
	77	22

0101-1

FIGURE F-11. Example of a national stock number index work package.

Source: https://assist.dla.mil -- Downloaded: 2016-12-09T23:32Z
Check the source to verify that this is the current version before use.

FIELD MAINTENANCE
PART NUMBER INDEX

PART NUMBER	FIG.	ITEM
AN960C10L	12	20
AN960C4L	8	11
	9	44
	12	24
	17	28
AN960C416L	8	89
AN960C516L	8	66
AN960C6	8	74
	13	5
AN960C6L	27	6
AN960C616	27	22
AN960C8	8	41
	11	10
AN960C816	17	9
AP373-95	8	84
AP373-96	12	15
B3-14	17	12
CA4342	27	23
CA4440-4	16	54
CD2-Z147-1	16	44
CKR05BX102M	10	7
CMR05F201JPDR	14	16
DB-3	16	65
DBM5W5P	15	17
	31	11
	32	2
DBM5W5S	8	29
	31	3
DBM50906-1	8	28
	15	18
	31	5
	32	4
DDM50PE	10	27
DM53744-21	8	32
DM53744-24	31	2
DM53744-25	31	1
DM53745-25	15	16
	31	10
DM53745-27	15	15
	31	9
DM53745-28	32	1
DSC7900-10-C-6	8	19
EP15160	10	81

PART NUMBER	FIG.	ITEM
I/O-100-00000	21	3
	22	5
	23	3
	24	2
	25	2
	26	2
JANTX1N1206A	12	1
	14	3
JANTX1N4102-1	10	89
JANTX1N4106-1	14	98
JANTX1N4109-1	9	31
JANTX1N4150-1	4	2
	8	77
	9	4
	10	1
	14	2
	28	1
JANTX1N4572A-1	10	86
JANTX1N4626-1	10	90
	28	8
JANTX1N4627	10	85
JANTX1N4627-1	14	99
JANTX1N5419	9	1
	12	2
JANTX1N5420	10	3
	14	4
JANTX1N5645A	9	30
JANTX1N5656A	10	87
JANTX1N5806	10	2
JANTX1N5811	9	3
	14	1
JANTX1N6075	9	2
JANTX1N647-1	4	1
JANTX2N2219A	28	5
JANTX2N2222A	10	29
	14	31
JANTX2N2369A	10	30
JANTX2N2907A	10	28
	14	34
JANTX2N3421	10	31
JANTX2N3507	9	11
JANTX2N3737	9	12
JANTX2N3868	9	13

0102-1

FIGURE F-12. Example of a part number index work package.

Source: https://assist.dla.mil -- Downloaded: 2016-12-09T23:32Z
Check the source to verify that this is the current version before use.

0103

FIELD MAINTENANCE
REFERENCE DESIGNATOR INDEX

REFERENCE DESIGNATOR	FIG.	ITEM
S1	1	15
W2	1	3
2AT1	2	309
2AT10	2	552
2AT11	2	699
2AT12	2	699
2AT13	2	479
2AT14	2	479
2AT2	2	309
2AT3	2	558
2AT4	2	564
2AT5	2	705
2AT5	2	479
2AT6	2	494
2AT7	2	675
2AT8	2	624
2AT9	2	552
2A1	2	489
2A1AT2	71	30
2A1AT3	71	33
2A1A1	70	6
2A1A10	70	6
2A1A11	70	12
2A1A13	70	13
2A1A14	70	14
2A1A15	70	14
2A1A16	70	15
2A1A17	70	16
2A1A18	70	13
2A1A19	70	14
2A1A20	70	14
2A1A21	70	15
2A1A22	70	16
2A1A23	70	17
2A1A24	70	13
2A1A25	70	14
2A1A26	70	14
2A1A27	70	15
2A1A28	70	16
2A1A29	70	18

REFERENCE DESIGNATOR	FIG.	ITEM
2A1A4	70	8
2A1A6	70	9
2A1A7	70	9
2A1A8	70	10
2A1A9	70	11
2A1DL1	70	25
2A1DL2	70	25
2A1DL3	70	25
2A1DL4	70	25
2A1DL5	70	25
2A1DL6	70	25
2A1J20	71	27
2A1J25	71	36
2A1J29	71	34
2A1W10	71	46
2A1W12	71	44
2A1W14	71	45
2A1W30	70	31
2A1W31	70	29
2A1W32	70	30
2A1W33	70	28
2A1W34	70	26
2A1W35	70	27
2A1W36	70	35
2A10	2	590
2A10A1	80	2
2A10A10	80	2
2A10A11	80	3
2A10A13	80	4
2A10A14	80	2
2A10A15	80	5
2A10A3	80	2
2A10A5	80	2
2A10A7	80	2
2A10A9	80	2
2A100	3	186
2A100CB1	18	15
2A100CB2	18	37
2A100CB3	18	37
2A100CB4	18	37

0103-1

FIGURE F-13. Example of a reference designator index work package.

Source: https://assist.dla.mil -- Downloaded: 2016-12-09T23:32Z
Check the source to verify that this is the current version before use.

(1)	(2) SMR CODE				(3)	(4)	(5)	(6)
ITEM NO	a. ARMY	b. AIR FORCE	c. NAVY	d. USMC	CAGEC	PART NUMBER	DESCRIPTION AND USABLE ON CODE (UOC)	QTY
							GROUP 04 -OUTPUT BOX ASSEMBLY	
							FIG.11 OUTPUT BOX INSTALLATION	
1	PACZZ	PAOZZ		PAOZZ	81205	2740-0003	. NUT, PLAIN, ASSEMBLED	7
2	PACZZ	PAOZZ		PAOZZ	19207	12325869	. BOLT, MACHINE	6
3	PACZZ	PAOZZ		PAOZZ	96906	MS35207-269	. SCREW, MACHINE	1
4	XDCZZ	XB		XBOZZ	30554	88-20036	. SPACER, TRAY, OUTPUT	1
5	PACZZ	PAOZZ		PAOZZ	96906	MS27183-42	. WASHER, FLAT	1
6	XDCCC	XB		XBOZZ	30554	88-20036	. OUTPUT BOX ASSEMBLY SEE FIGURE 13 FOR BREAK-DOWN	1
7	PACZ	PAOZZ		PAOZZ	45722	P15121-64	. . SCREW, ASSEMBLED, WAS	2
8	PACZZ	PAOZZ		PAOZZ	81205	2740-0003	. . NUT, PLAIN, ASSEMBLED	10
9	PACZZ	PAOZZ		PAOZZ	96906	88-20314-4	. . CLAMP, LOOP	2
10	PACZZ	PAOZZ		PAOZZ	45722	P15121-67	. . SCREW, ASSEMBLED, WAS	9
11	XDCZZ	XB		XBOZZ	9R803	4300-12-XP-74	. . MARKER STRIP, TERMI	1
12	XDCZZ	XB		XBOZZ	9R803	3300-14-XP-74	. . MARKER STRIP, TERMI	1
13	PACZZ	PAOZZ		PAOZZ	78189	511-081800-00	. . NUT, PLAIN, ASSEMBLED	2
14	PACZZ	PAOZZ		PAOZZ	45722	P15121-37	. . SCREW, ASSEMBLED, WAS	2
15	PACZZ	PAOZZ		PAOZZ	96906	MS27183-42	. . WASHER, FLAT	6
							END OF FIGURE	

11-1

FIGURE F-14. Example of a muliservice RPSTL.

Source: https://assist.dla.mil -- Downloaded: 2016-12-09T23:32Z
Check the source to verify that this is the current version before use.

This page intentionally left blank.

Source: https://assist.dla.mil -- Downloaded: 2016-12-09T23:32Z
Check the source to verify that this is the current version before use.

APPENDIX G
TECHNICAL MANUALS SUPPORTING INFORMATION

G.1 SCOPE.

G.1.1 Scope. This appendix establishes the technical content requirements for the preparation of supporting information for major weapon systems, and their related systems, subsystems, equipment, weapons replacement assemblies (WRAs), and shop replacement assemblies (SRAs). This Appendix is a mandatory part of this standard. The information contained herein is intended for compliance. The requirements are applicable for all maintenance levels through overhaul (depot) including Depot Maintenance Work Requirements (DMWRs) and National Maintenance Work Requirements (NMWRs).

G.2 APPLICABLE DOCUMENTS.

The applicable documents in section 2 apply to this appendix.

G.3 DEFINITIONS.

The definitions in section 3 apply to this appendix.

G.4 GENERAL REQUIREMENTS.

G.4.1 General. Supporting information shall be prepared for weapon systems, major equipment, components and applicable support and interface equipment. Supporting information requirements are included for the preparation of technical data that supplements the specific operation and maintenance information contained in the TM. This supplemental information includes reference data, general maintenance and parts information and associated illustrations.

G.4.2 Maintenance level applicability. Requirements contained in this standard are applicable to all maintenance levels unless specifically noted in bold and in parentheses (i.e., **Field**). The labeled requirements shall be applicable to all TMs containing that maintenance level. An explanation of all applicable Department of Army maintenance levels is provided in section 3.

G.4.3 Preparation of digital data for electronic delivery. Technical manual data prepared and delivered digitally in accordance with this standard shall be Extensible Markup Language (XML) tagged using the Document Type Definition (DTD) for Maintenance Instructions and the XML Stylesheet Language (XSL), or style sheets in accordance with MIL-STD-2361. Refer to 4.6 for information on obtaining or accessing this DTD. XML tags used in the modular DTD are noted throughout the text of this standard in bracketed, bold characters (i.e., **<macwp>**) as a convenience for the TM author and to ensure that the tags are used correctly when developing a document instance.

G.4.4 Use of the DTD/XSLs. The DTD referenced in this standard interpret the technical content and structure for the functional requirements contained in this standard and are mandatory for use. The XSLs referenced herein interpret the style and format. As specified by the contracting activity, XSLs, or style sheets may be used to produce final reproducible paper copy for all TMs prepared in accordance with this standard. For additional information on the DTD and specific XSLs refer to MIL-STD-2361.

Source: https://assist.dla.mil -- Downloaded: 2016-12-09T23:32Z
Check the source to verify that this is the current version before use.

G.4.5 Content structure and format. The examples provided herein are an accurate representation of the content structure and format requirements contained in this appendix and shall be followed to permit the effective use of the DTD for Support Information.

G.4.6 Style and format. This standard provides style and format requirements for the technical content requirements described in this appendix. These requirements are considered mandatory and are intended for compliance.

G.4.7 Work package development. Technical manual data developed in accordance with this standard shall be divided into individual, stand alone units of information called work packages. A work package shall consist of descriptive, operational, maintenance, troubleshooting, support, or parts information for the weapon system or equipment.

G.4.8 Selective application and tailoring. This standard contains some requirements that may not be applicable to the preparation of all technical manuals. Selective application and tailoring of requirements contained in this standard are the responsibility of the acquiring activity and shall be accomplished using Appendix A, Technical Manual Content Selection Matrixes. The applicability of some requirements is also designated by one of the following statements: unless specified otherwise by the acquiring activity; as or when specified by the acquiring activity.

G.5 DETAILED REQUIREMENTS.

G.5.1 Preparation of supporting information. Supporting information shall be developed as work packages. Supporting information work packages are described in G.5.2 through G.5.11. Supporting information work packages shall be placed in a single chapter called “Supporting Information”. These work packages shall be placed in the TM in the order in which they are presented herein, as applicable.

G.5.2 References work package **<refwp>**. This work package shall be prepared and list all publications referenced in the TM and required by the user to operate and/or maintain the equipment. It shall consist of a scope and publication list(s).

G.5.2.1 Work package identification information **<wpidinfo>**. This information is required for this work package (refer to 4.7.9.1).

G.5.2.2 Initial setup information. This initial setup information is not required for this work package.

G.5.2.3 Scope **<scope>**. Information concerning the use and content of the references work package shall be prepared (refer to FIGURE G-1).

G.5.2.4 Publication list **<publist>**. Individual paragraphs shall be prepared for each publication type. All related/referenced publications, with the exception of those publications that are currently unpublished, shall be listed. This list shall identify the publication by number **<name>/<extref>/<link>** and title <**title**> in alphanumerical sequence. If publication is non-government, the source shall be given and the publications shall be listed alphabetically by title (refer to FIGURE G-1). If a List of Applicable Publications (LOAP) exists, it may be referenced.

G.5.3 Maintenance allocation chart **(MAC) (Field level only)**. The MAC shall be prepared and include an introduction work package and MAC work package.

G.5.3.1 DELETED.

G.5.3.1.1 DELETED.

Source: https://assist.dla.mil -- Downloaded: 2016-12-09T23:32Z
Check the source to verify that this is the current version before use.

G.5.3.1.2 DELETED.

G.5.3.1.3 DELETED.

G.5.3.2 DELETED.

G.5.3.2.1 DELETED.

G.5.3.2.2 DELETED.

G.5.3.2.3 DELETED.

G.5.3.3 Introduction for standard two-level maintenance MAC work package **<macintrowp>**.

G.5.3.3.1 Work package identification information **<wpidinfo>**. This information is required for this work package (refer to 4.7.9.1).

G.5.3.3.2 Initial setup information. This initial setup information is not required for this work package.

G.5.3.3.3 Introduction **<intro>**. The following text shall be prepared and included verbatim (refer to FIGURE G-4).

"**MAINTENANCE ALLOCATION CHART (MAC)**
INTRODUCTION

The Army Maintenance System MAC

This introduction provides a general explanation of all maintenance and repair functions authorized at the two maintenance levels under the Two-Level Maintenance System concept.

This MAC (immediately following the introduction) designates overall authority and responsibility for the performance of maintenance functions on the identified end item or component. The application of the maintenance functions to the end item or component shall be consistent with the capacities and capabilities of the designated maintenance levels, which are shown on the MAC in column (4) as:

Field – includes two subcolumns, Crew (C) and Maintainer (F).

Sustainment – includes two subcolumns, Below Depot (H) and Depot (D)

The maintenance to be performed at field and sustainment levels is described as follows:

1. Crew maintenance. The responsibility of a using organization to perform maintenance on its assigned equipment. It normally consists of inspecting, servicing, lubricating, adjusting, and replacing parts, minor assemblies, and subassemblies. The replace function for this level of maintenance is indicated by the letter "C" in the third position of the SMR code. A "C" appearing in the fourth position of the SMR code indicates complete repair is possible at the crew maintenance level.

Source: https://assist.dla.mil -- Downloaded: 2016-12-09T23:32Z
Check the source to verify that this is the current version before use.

2. Maintainer maintenance. Maintenance accomplished on a component, accessory, assembly, subassembly, plug-in unit, or other portion either on the system or after it is removed. The replace function for this level of maintenance is indicated by the letter "F" appearing in the third position of the SMR code. An "F" appearing in the fourth position of the SMR code indicates complete repair is possible at the field maintenance level. Items are returned to the user after maintenance is performed at this level.
3. Below depot sustainment. Maintenance accomplished on a component, accessory, assembly, subassembly, plug-in unit, or other portion either on the system or after it is removed. The replace function for this level of maintenance is indicated by the letter "H" appearing in the third position of the SMR code. An "H" appearing in the fourth position of the SMR code indicates complete repair is possible at the below depot sustainment maintenance level. Items are returned to the supply system after maintenance is performed at this level.
4. Depot sustainment . Maintenance accomplished on a component, accessory, assembly, subassembly, plug-in unit, or other portion either on the system or after it is removed. The replace function for this level of maintenance is indicated by the letter "D" or "K" appearing in the third position of the SMR code. Depot sustainment maintenance can be performed by either depot personnel or contractor personnel. A "D" or "K" appearing in the fourth position of the SMR code indicates complete repair is possible at the depot sustainment maintenance level. Items are returned to the supply systems after maintenance is performed at this level.

The tools and test equipment requirements table (immediately following the MAC) lists the tools and test equipment (both special tools and common tool sets) required for each maintenance function as referenced from the MAC.

The remarks table (immediately following the tools and test equipment requirements) contains supplemental instructions and explanatory notes for a particular maintenance function.

Maintenance Functions

Maintenance functions are limited to and defined as follows:

1. Inspect. To determine the serviceability of an item by comparing its physical, mechanical, and/or electrical characteristics with established standards through examination (e.g., by sight, sound, or feel). This includes scheduled inspection and gaugings and evaluation of cannon tubes.
2. Test. To verify serviceability by measuring the mechanical, pneumatic, hydraulic, or electrical characteristics of an item and comparing those characteristics with prescribed standards on a scheduled basis, i.e., load testing of lift devices and hydrostatic testing of pressure hoses.
3. Service. Operations required periodically to keep an item in proper operating condition; e.g., to clean (includes decontaminate, when required), to preserve, to drain, to paint, or to replenish fuel, lubricants, chemical fluids, or gases. This includes scheduled exercising and purging of recoil mechanisms. The following are examples of service functions:

Source: https://assist.dla.mil -- Downloaded: 2016-12-09T23:32Z
Check the source to verify that this is the current version before use.

a. Unpack. To remove from packing box for service or when required for the performance of maintenance operations.
b. Repack. To return item to packing box after service and other maintenance operations.
c. Clean. To rid the item of contamination.
d. Touch up. To spot paint scratched or blistered surfaces.
e. Mark. To restore obliterated identification.

4. Adjust. To maintain or regulate, within prescribed limits, by bringing into proper position, or by setting the operating characteristics to specified parameters.
5. Align. To adjust specified variable elements of an item to bring about optimum or desired performance.
6. Calibrate. To determine and cause corrections to be made or to be adjusted on instruments of test, measuring, and diagnostic equipment used in precision measurement. Consists of comparisons of two instruments, one of which is a certified standard of known accuracy, to detect and adjust any discrepancy in the accuracy of the instrument being compared.
7. Remove/Install. To remove and install the same item when required to perform service or other maintenance functions. Install may be the act of emplacing, seating, or fixing into position a spare, repair part, or module (component or assembly) in a manner to allow the proper functioning of an equipment or system.
8. Paint (ammunition only). To prepare and spray color coats of paint so that the ammunition can be identified and protected. The color indicating primary use is applied, preferably, to the entire exterior surface as the background color of the item. Other markings are to be repainted as original so as to retain proper ammunition identification.
9. Replace. To remove an unserviceable item and install a serviceable counterpart in its place. “Replace” is authorized by the MAC and assigned maintenance level is shown as the third position code of the Source, Maintenance and Recoverability (SMR) code.
10. Repair. The application of maintenance services, including fault location/troubleshooting, removal/installation, disassembly/assembly procedures and maintenance actions to identify troubles and restore serviceability to an item by correcting specific damage, fault, malfunction, or failure in a part, subassembly, module (component or assembly), end item, or system.

NOTE

The following definitions are applicable to the “repair” maintenance function:

Services. Inspect, test, service, adjust, align, calibrate, and/or replace.

Fault location/troubleshooting. The process of investigating and detecting the cause of equipment malfunctioning; the act of isolating a fault within a system or Unit Under Test (UUT).

Source: https://assist.dla.mil -- Downloaded: 2016-12-09T23:32Z
Check the source to verify that this is the current version before use.

Disassembly/assembly. The step-by-step breakdown (taking apart) of a spare/functional group coded item to the level of its least component, that is assigned an SMR code for the level of maintenance under consideration (i.e., identified as maintenance significant).

Actions. Welding, grinding, riveting, straightening, facing, machining, and/or resurfacing.

11. Overhaul. That maintenance effort (service/action) prescribed to restore an item to a completely serviceable/operational condition as required by maintenance standards in appropriate technical publications. Overhaul is normally the highest degree of maintenance performed by the Army. Overhaul does not normally return an item to like new condition.

12. Rebuild. Consists of those services/actions necessary for the restoration of unserviceable equipment to a like new condition in accordance with original manufacturing standards. Rebuild is the highest degree of material maintenance applied to Army equipment. The rebuild operation includes the act of returning to zero those age measurements (e.g., hours/miles) considered in classifying Army equipment/components.

Explanation of Columns in the MAC

Column (1) Group Number. Column (1) lists Functional Group Code (FGC) numbers, the purpose of which is to identify maintenance significant components, assemblies, subassemblies, and modules with the Next Higher Assembly (NHA).

Column (2) Component/Assembly. Column (2) contains the item names of components, assemblies, subassemblies, and modules for which maintenance is authorized.

Column (3) Maintenance Function. Column (3) lists the functions to be performed on the item listed in column (2). (For a detailed explanation of these functions refer to “Maintenance Functions” outlined above).

Column (4) Maintenance Level. Column (4) specifies each level of maintenance authorized to perform each function listed in column (3), by indicating work time required (expressed as manhours in whole hours or decimals) in the appropriate subcolumn. This work time figure represents the active time required to perform that maintenance function at the indicated level of maintenance. If the number or complexity of the tasks within the listed maintenance function varies at different maintenance levels, appropriate work time figures are to be shown for each level. The work time figure represents the average time required to restore an item (assembly, subassembly, component, module, end item, or system) to a serviceable condition under typical field operating conditions. This time includes preparation time (including any necessary disassembly/assembly time), troubleshooting/fault location time, and quality assurance time in addition to the time required to perform the specific tasks identified for the maintenance functions authorized in the MAC. The symbol designations for the various maintenance levels are as follows:

Source: https://assist.dla.mil -- Downloaded: 2016-12-09T23:32Z
Check the source to verify that this is the current version before use.

Field:

C Crew maintenance

F Maintainer maintenance

Sustainment:

L Specialized Repair Activity (SRA)

H Below depot maintenance

D Depot maintenance

NOTE

The "L" maintenance level is not included in column (4) of the MAC. Functions to this level of maintenance are identified by work time figure in the "H" column of column (4), and an associated reference code is used in the REMARKS column (6). This code is keyed to the remarks and the SRA complete repair application is explained there.

Column (5) Tools and Equipment Reference Code. Column (5) specifies, by code, those common tool sets (not individual tools), common Test, Measurement and Diagnostic Equipment (TMDE), and special tools, special TMDE and special support equipment required to perform the designated function. Codes are keyed to the entries in the tools and test equipment table.

Column (6) Remarks Code. When applicable, this column contains a letter code, in alphabetical order, which is keyed to the remarks table entries.

Explanation of Columns in the Tools and Test Equipment Requirements

Column (1) - Tool or Test Equipment Reference Code. The tool or test equipment reference code correlates with a code used in column (5) of the MAC.

Column (2) - Maintenance Level. The lowest level of maintenance authorized to use the tool or test equipment.

Column (3) - Nomenclature. Name or identification of the tool or test equipment.

Column (4) - National Stock Number (NSN). The NSN of the tool or test equipment.

Column (5) - Tool Number. The manufacturer's part number.

Explanation of Columns in the Remarks

Column (1) - Remarks Code. The code recorded in column (6) of the MAC.

Column (2) - Remarks. This column lists information pertinent to the maintenance function being performed as indicated in the MAC."

G.5.3.3A Introduction for two-level aviation maintenance format MAC work package <**macintrowp**>.

G.5.3.3A.1 Work package identification information <**wpidinfo**>. This information is required for this work package (refer to 4.7.9.1).

Source: https://assist.dla.mil -- Downloaded: 2016-12-09T23:32Z
Check the source to verify that this is the current version before use.

G.5.3.3A.2 Initial setup information. This initial setup information is not required for this work package.

G.5.3.3A.3 Introduction <**intro**>. The following test shall be prepared and included verbatim (refer to FIGURE G-4A).

"MAINTENANCE ALLOCATION CHART (MAC)
INTRODUCTION

Aviation Maintenance Allocation Chart

The MAC (immediately following the introduction) designates overall authority and responsibility for the performance of maintenance functions on the identified end item or component. The application of the maintenance functions to the end item or component shall be consistent with the capacities and capabilities of the designated maintenance level which are shown on the MAC as:

Field - includes two columns, "O" which corresponds to Aviation Maintenance Company (AMC) and "F" which corresponds to Aviation Support Battalion (ASB)
Sustainment - includes two columns, "L" which corresponds to Theater Aviation Sustainment Maintenance Group (TASMG) and other organizations that have National Maintenance Program certification and "D" which corresponds to Depot .

The maintenance to be performed below depot and in the field is described as follows:

1. **Aviation Maintenance Company (AMC)**. The primary purpose of the aviation maintenance company is to support the momentum of offensive operations. Composition of the AMC will be based on type of operations being supported, nature of the battlefield, and the need for flexibility. AMCs will provide forward positioning of essential maintenance repair parts and supplies, maximum use of support teams, use of airlift/air drops for resupply, for maintenance that does not interfere with the tactical plans and operations. AMCs are agile, mobile, and well equipped. They will carry limited stockpiles of demand supported, essential parts and supplies. The AMC performs battle damage assessment and repair (BDAR) and unit level repairs on Aviation Life Support Systems (ALSS). The AMC performs production control, quality control, and Maintenance Management/Maintenance Test Pilot functions. AMCs will rig aircraft for recovery operations. The AMC manages the battalion maintenance program and operates a central tool room. The AMC conducts forward arming and refueling. AMCs will be comprised of 3 to 4 modular platoons, which are configured to maintain unit level operational readiness and aircraft availability:

   Headquarters Platoon - Establishes standard operating procedures, receives and processes work requests, schedules maintenance, maintains status of aircraft, coordinates inspections and test flights and return of repaired aircraft, enforces quality standards, responsible for safety. Also, obtains, stores, and

Source: https://assist.dla.mil -- Downloaded: 2016-12-09T23:32Z
Check the source to verify that this is the current version before use.

issues Classes II, III, IV, and IX, prescribe load list, shop stock and authorized stockage list items.

Airframe Repair Platoon - Tailored to battalion it supports. Performs scheduled and unscheduled maintenance, troubleshoots faulty components, and removes and replaces aircraft components. Provides mission capable aircraft to support flight company operations.

Component Repair Platoon - Performs scheduled and unscheduled maintenance, troubleshoots faulty components, and removes and replaces aircraft components. Performs BDAR and manages Class IX spare/shop stock. This platoon uses Shop Equipment Contact Maintenance (SECM) trucks which are multi-capable and self-contained and are used to perform on-site maintenance using enhanced power tools, test, measurement, and diagnostic equipment, welding and cutting equipment, and an air compressor. The SECM truck is highly mobile.

Armament platoon - Only used in attack battalions and cavalry squadrons. Performs scheduled and unscheduled maintenance on armament components.

2. **Aviation Support Company (ASC) in the Aviation Support Battalion (ASB).** Comprised of Headquarters, Airframe, and Component Repair Platoons. Provides maintenance assistance to aviation units helping them maintain operational readiness and aircraft availability. Utilizes SECM trucks. Capable of supporting split based operations in two separate and distinct locations. Performs the following types of maintenance:

   a. Intermediate maintenance and logistics support operations.

   b. Maintenance actions which require more than 3 days to correct.

   c. Phased maintenance and preventive maintenance services.

   d. In-depth troubleshooting and diagnosis of airframe and component malfunctions.

   e. Repairs airframes and LRU component.

   f. Fixes night vision systems, aviation life support systems, aviation electrical and hydraulic components.

   g. Limited capability to fabricate hydraulic lines.

   h. Repairs engines, prop and rotors, armament, and armament subsystems.

   i. Fixes and fuels organic battalion equipment, ground aviation vehicles, and aviation ground support equipment.

   j. Operates and performs field maintenance on aviation ground power units, generator, and ground support equipment.

   k. Battle damage assessment and repair (BDAR).

   l. Production control and quality control.

   m. Test Pilot functions.

3. **Theater Aviation Sustainment Maintenance Group (TASMG) -** Assists in deployment and redeployment, provides technical assistance, supports increased operational tempo, sustains Army aviation across the entire spectrum of operations. The TASMG:

Source: https://assist.dla.mil -- Downloaded: 2016-12-09T23:32Z
Check the source to verify that this is the current version before use.

a. Provides support to CONUS deploying forces

b. Provides support to OCUNUS deployed forces

c. OCONUS aviation maintenance support for contingency and stability and/or support operations.

d. Expands aviation maintenance capabilities of CONUS depots

e. Classifies and inspects aviation stocks and components.

f. Repairs engines, airframes, armament, composite materials, electrical systems, avionics, hydraulics.

g. Fabricates hydraulics lines.

h. Backup ASB and AMC maintenance functions.

Use of the MAC

NOTE

Approved item names are used throughout this MAC. Generic terms/ nomenclature (if any) are expressed in parentheses and are not to be considered as official terminology.

This MAC assigns maintenance functions to the lowest level of maintenance, based on past experience and the following considerations:

Skills available.

Work time required.

Tools and test equipment required and/or available.

Only the lowest level of maintenance authorized to perform a maintenance function is indicated. If the lowest maintenance level cannot perform all tasks of any single maintenance function (e.g., test, repair), then the higher maintenance level(s) that can accomplish additional tasks will also be indicated.

A maintenance function assigned to a maintenance level will automatically be authorized to be performed at any higher maintenance level.

A maintenance function that cannot be performed at the assigned level of maintenance for any reason may be evacuated to the next higher maintenance level. Higher maintenance levels will perform the maintenance functions of lower maintenance levels when required by the commander who has the authority to direct such tasking.

The assignment of a maintenance function will not be construed as authorization to carry the related repair parts or spares in stock. Information to requisition or otherwise secure the necessary repair parts will be as specified in the associated RPSTL.

Normally there will be no deviation from the assigned level of maintenance. In cases of operational necessity, at the request of a lower maintenance level and on a one-time basis, transfer of maintenance functions to the lower level may be accomplished by specific authorization of the maintenance officer of the higher level of maintenance to which the function is assigned. The special tools, equipment, etc., required by the lower level of maintenance to perform this function will be furnished by the maintenance level to which the function is assigned. This transfer of a maintenance function to a lower maintenance level does not relieve the higher maintenance level of the responsibility for

Source: https://assist.dla.mil -- Downloaded: 2016-12-09T23:32Z
Check the source to verify that this is the current version before use.

the function. The higher level of maintenance will provide technical supervision and inspection of the function being performed at the lower level.

Maintenance Functions

Maintenance functions will be limited to and defined as follows:

1. Inspect. To determine the serviceability of an item by comparing its physical, mechanical, and/or electrical characteristics with established standards through examination (e.g., by sight, sound, or feel).
2. Test. To verify serviceability by measuring the mechanical, pneumatic, hydraulic, or electrical characteristics of an item and comparing those characteristics with prescribed standards.
3. Service. Operations required periodically to keep an item in proper operating condition, i.e., to clean (includes decontaminate, when required), to preserve, to drain, to paint, or to replenish fuel, lubricants, chemical fluids, or gases.
   a. Unpack. To remove from packing box for service when required for the performance of maintenance operations.
   b. Repack. To return item to packing box after service and other maintenance operations.
   c. Clean. To rid the item of contamination.
   d. Touch up. To spot paint scratched or blistered surfaces.
   e. Mark. To restore obliterated identification.
4. Adjust. To maintain or regulate, within prescribed limits, by bringing into proper or exact position, or by setting the operating characteristics to specified parameters.
5. Align. To adjust specified variable elements of an item to bring about optimum or desired performance.
6. Calibrate. To determine and cause corrections to be made or to be adjusted on instruments of test, measuring, and diagnostic equipment used in precision measurement. Consists of comparisons of two instruments, one of which is a certified standard of known accuracy, to detect and adjust any discrepancy in the accuracy of the instrument being compared.
7. Remove/Install. To remove and install the same item when required to perform service or other maintenance functions. Install may be the act of emplacing, seating, or fixing into position a spare, repair part, or module (component or assembly) in a manner to allow the proper functioning of an equipment or system.
8. Paint (ammunition only). To prepare and spray color coats of paint so that the ammunition can be identified and protected. The color indicating primary use is applied, preferably, to the entire exterior surface as the background color of the item. Other markings are to be painted as original so as to retain proper ammunition identification.

Source: https://assist.dla.mil -- Downloaded: 2016-12-09T23:32Z
Check the source to verify that this is the current version before use.

9. Replace. To remove an unserviceable item and install a serviceable counterpart in its place. "Replace" is authorized by the MAC and assigned maintenance level is shown as the third position code of the Source, Maintenance, and Recoverability (SMR) code.
10. Repair. The application of maintenance services, including fault location/troubleshooting, removal/installation, disassembly/assembly procedures, and maintenance actions to identify troubles and restore serviceability to an item by correcting specific damage, fault, malfunction, or failure in a part, subassembly, module (component or assembly), end item, or system.

NOTE

The following definitions are applicable to the "repair" maintenance function:

Services. Inspect, test, service, adjust, align, calibrate, and/or replace.

Fault location/troubleshooting. The process of investigating and detecting the cause of equipment malfunctioning; the act of isolating a fault within a system or Unit Under Test (UUT).

Disassembly/assembly. The step-by-step taking apart (or breakdown) of a spare/functional group coded item to the level of its least component identified as maintenance significant (i.e., assigned an SMR code) for the level of maintenance under consideration.

Actions. Welding, grinding, riveting, straightening, facing, machining, and/or resurfacing.

11. Overhaul. That maintenance effort (service/action) prescribed to restore an item to a completely serviceable/operational condition as required by maintenance standards in appropriate technical publications. Overhaul is normally the highest degree of maintenance performed by the Army. Overhaul does not normally return an item to like new condition.
12. Rebuild. Those services/actions necessary for the restoration of unserviceable equipment to a like new condition in accordance with original manufacturing standards. Rebuild is the highest degree of materiel maintenance applied to Army equipment. The rebuild operation includes the act of returning to zero those age measurements (e.g., hours/miles) considered in classifying Army equipment/components.

Explanation of Entries in the MAC

Columns (1) - Group Number and (2) Component/Assembly. The functional groupings in the sample below identify maintenance significant components, assemblies, subassemblies, and modules with the next higher assembly.

Source: https://assist.dla.mil -- Downloaded: 2016-12-09T23:32Z
Check the source to verify that this is the current version before use.

Group Number	Component/Assembly Description
04	POWER PLANT
0401	ENGINE, GENERAL Servicing, handling inspection requirements, overhaul and retirement schedules. External lines and hoses. (As applicable.)
0402	COMPRESSOR SECTION (COLD SECTION MODULE) Rotor, blades, vanes, impeller, stators, inlet guide vanes, mainframe, particle separator, bleed valve, bearings, seals, external lines and hoses.
0403	COMBUSTION SECTION (HOT SECTION MODULE) Liners, nozzles, stators, rotor, seals, couplings, blades.
0404	POWER-TURBINE (POWER TURBINE MODULE) Nozzles, rotors, blades, exit guide vanes, exhaust frame, drive shaft, bearings, seals, external lines and hoses.
0405	ACCESSORY GEAR BOX (ACCESORY SECTION MODULE) Input and output gears, seals, chip detector, housings, drive shaft, bearings.
0406	FUEL SYSTEM Fuel control, fuel boost pump, governors, fuel filter assembly, sequence valve, fuel manifold, fuel nozzle, external lines and hoses.
0407	ELECTRICAL SYSTEM Electrical control units, exciters, thermocouples, ignition harness, electrical cables, history record, torque over speed sensor, Np sensor, external lines and hoses.
0408	OIL SYSTEM Tanks, oil filter, oil cooler, lube and scavenger pumps, oil filter bypass sensor, external lines and hoses.

Column (3) - Maintenance Function. Column (3) lists the functions to be performed on the items listed in Component/Assembly.

Column (4) - Maintenance Level. The maintenance levels field and sustainment are listed on the MAC with individual columns for AMC, ASB, TASMG, and Depot that include the work times for maintenance functions at each maintenance level. Work time presentations such as "0.1" indicate the average time (expressed in manhours in whole hours or decimals) it requires a maintenance level to perform a specified maintenance function. If a work time has not been established, the columnar presentation will indicate "--". Maintenance levels higher than the level of maintenance indicated are authorized to perform the indicated function.

Column (5) - Tools and Equipment Reference Code. Column (5) specifies, by code, those common tool sets (not individual tools), common TMDE, and special tools, special TMDE, and special support equipment required to perform the designated function.

Column (6) - Remarks Code. When applicable, this column contains a letter code, in alphabetical order, which is keyed to the remarks.

Source: https://assist.dla.mil -- Downloaded: 2016-12-09T23:32Z
Check the source to verify that this is the current version before use.

Explanation of Entries in the Tools and Test Equipment Requirements

Column (1) - Tool or Test Equipment Reference Code. The tool or test equipment reference code correlates with a code used in column (5) of the MAC.

Column (2) - Maintenance Level. The lowest level of maintenance authorized to use the tool or test equipment.

Column (3) - Nomenclature. Name or identification of the tool or test equipment.

Column (4) - National Stock Number (NSN). The NSN of the tool or test equipment.

Column (5) - Tool Number. The manufacturer's part number.

Explanation of Entries in the Remarks

Column (1) - Remarks Code. The code recorded in remarks code entry of the MAC.

Column (2) - Remarks. This entry lists information pertinent to the maintenance function being performed as indicated in the MAC"

G.5.3.4 MAC work package **<macwp>**. This work package shall be prepared in Functional Group Code (FGC) sequence to consolidate and identify those groups on the list which involve identified maintenance functions. The MAC shall be prepared according to the approved source data provided by the acquiring activity.

G.5.3.4.1 Work package identification information **<wpidinfo>**. Work package identification information is required for this work package (refer to 4.7.9.1).

G.5.3.4.2 Initial setup information. Initial setup information is not required for this work package.

G.5.3.4.3 MAC entries.

a. The basic entries in the MAC shall be a list of functional groups applicable to the end item which require maintenance. The term functional group applies to reparable assemblies and subassemblies, i.e., spares (any repairable component required for the maintenance or repair of an end item), but not to repair parts (any consumable, non-repairable component required for the maintenance or repair of an end item). The end item group shall be numbered “00,” or its equivalent “AA.”
b. Entries shall be item names (a basic name and a noun word or phrase modifier, e.g., transformer, pulse, low power) and, where applicable, type designators, without stock or part numbers (P/Ns) if possible, in order to minimize need for subsequent change; however, entries shall contain positive identification. Parts that are not subject to maintenance shall not be listed in the MAC.
c. All item names of MAC functional groups shall be official nomenclature in accordance with the RPSTL nomenclature or other source as specified by the acquiring activity. Reverse word order shall be used in the MAC.
d. The maintenance code entered in the third position of the Source, Maintenance, and Recoverability (SMR) code in the RPSTL shall be used to identify the lowest category of maintenance that is authorized to remove, replace, and use the spare or repair parts. SMR codes are further defined in Appendix F, Repair Parts and Special Tools List (RPSTL).

Source: https://assist.dla.mil -- Downloaded: 2016-12-09T23:32Z
Check the source to verify that this is the current version before use.

e. If the maintenance function is a replace function only for a repair part, the repair part shall not be listed in the MAC, unless not listing the repair part would result in omission of the Next Higher Assembly (NHA) group number; in this case, the part shall be listed in order to list the NHA functional group number.

f. All items in the MAC shall specify the maintenance level(s) to which a function is authorized.

g. Exception is authorized to ammunition MACs to permit use of maintenance function headings that better describe or identify ammunition peculiar maintenance functions. The headings used and their definitions shall be included in the appropriate ammunition TM(s).

G.5.3.4.4 MAC format. The standard two-level MAC **<mac>** (standard information) and aviation two-level MAC **<avmac>** (standard information) shall be prepared in the formats shown in FIGURE G-7 (standard two-level), and FIGURE G-7A (aviation two-level) and as follows:

a. For an explanation of data to be listed in columns of the MAC, refer to the introduction information presented in G.5.3.1, G.5.3.2, or G.5.3.3 as applicable.

b. The group number **<groupno>** shall be entered in column 1, the nomenclature of the spare (component/assembly) **<compassem>** shall be entered in column 2, and the maintenance function **<maintfunc>** shall be listed in column 3 of the MAC.

c. The maintenance level entry shall be as follows:

(1) Column 4 of the standard two-level MAC shall be divided into two main headings, one for field and one for sustainment. Beneath the main headings there shall be four subheadings **<maintclass>. Crew <crew>** and maintainer **<direct>** shall be under field and below depot **<gensup>** and depot **<depot>** shall be under sustainment.

(2) Column 4 of the aviation two-level MAC shall be divided into two main headings, one for field and one for sustainment. Beneath the main headings there shall be four subheadings <av**maintclass-2lvl>.** Aviation maintenance company <**amc**> and aviation support battalion <**asb**> shall be under field and theater aviation sustainment maintenance group <**tasmg**> and depot <**depot>** shall be under sustainment.

d. A work time figure must appear in the subcolumn for the maintenance level authorized to perform the maintenance listed in column 3.

e. Reference numbers for all required tools and test equipment **<terefs>** shall be listed in column 5 of the MAC. These reference numbers shall correspond to the appropriate tools/test equipment listed in the tools and test equipment table.

f. Reference letters for applicable remarks **<remarkrefs>** shall be listed in column 6 of the MAC. These reference letters shall correspond to the appropriate remarks listed in the remarks table.

Source: https://assist.dla.mil -- Downloaded: 2016-12-09T23:32Z
Check the source to verify that this is the current version before use.

G.5.3.5 Tools and test equipment requirements **<tereqtab>**. A tabular list (**standard information**) of all tools and test equipment, both special and common, required to maintain the equipment shall be prepared in accordance with the format shown in FIGURE G-8 or FIGURE G-9, as applicable. Common tools shall not be included on this list when they are part of an existing set, kit, or outfit authorized to the intended user; however, the authorized set, kit, or outfit which contains the prescribed common tools shall be listed.

G.5.3.6 Remarks **<remarktab>**. Remarks (**standard information**) pertinent to maintenance functions shall be prepared in accordance with the format shown in FIGURE G-8 or FIGURE G-9, as applicable.

G.5.4 Components of end item **(COEI) and basic issue items (BII) lists work package (operator only) <coeibiiwp>**. This work package shall be prepared as an inventory for the equipment to ensure safe and efficient operation. The format of the COEI and BII shall be based on the number of items and usability. When there are only a few items the illustrations shall be placed above the tabular listing (Method A). When there are numerous items the illustrations may be included within the tabular listing for better usability (Method B). The data described in G.5.4.1 through G.5.4.5 shall be prepared.

G.5.4.1 Work package identification information **<wpidinfo>**. Work package identification information is required for this work package (refer to 4.7.9.1).

G.5.4.2 Initial setup information. Initial setup information is not required for this work package.

G.5.4.3 Introduction for COEI and BII lists work package **<intro>**. The following introduction shall be prepared and included verbatim. (Refer also to FIGURE G-10 or FIGURE G-11.)

"**COMPONENTS OF END ITEM (COEI) AND BASIC ISSUE ITEMS (BII) LISTS**

INTRODUCTION

Scope

This work package lists COEI and BII for the (*insert the short end item name*) to help you inventory items for safe and efficient operation of the equipment.

General

The COEI and BII information is divided into the following lists:

Components of End Item (COEI). This list is for information purposes only and is not authority to requisition replacements. These items are part of the (*enter name of end item*). As part of the end item, these items must be with the end item whenever it is issued or transferred between property accounts. Items of COEI are removed and separately packaged for transportation or shipment only when necessary. Illustrations are furnished to help you find and identify the items.

Basic Issue Items (BII). These essential items are required to place the (*enter name of end item*) in operation, operate it, and to do emergency repairs. Although shipped separately packaged, BII must be with the (*enter name of end item*) during operation and when it is transferred between property accounts. Listing these items is your authority to request/requisition them for replacement based on authorization of the end

Source: https://assist.dla.mil -- Downloaded: 2016-12-09T23:32Z
Check the source to verify that this is the current version before use.

item by the TOE/MTOE. Illustrations are furnished to help you find and identify the items.

Explanation of Columns in the COEI List and BII List

Select method A text.

"Column (1) Illus Number. Gives you the number of the item illustrated.

Column (2) National Stock Number (NSN). Identifies the stock number of the item to be used for requisitioning purposes.

Column (3) Description, Part Number/(CAGEC). Identifies the Federal item name (in all capital letters) followed by a minimum description when needed. The stowage location of COEI and BII is also included in this column. The last line below the description is the part number and the Commercial and Government Entity Code (CAGEC) (in parentheses).

Column (4) Usable On Code. When applicable, gives you a code if the item you need is not the same for different models of equipment. (*Add the following only as applicable. Replace Xs with appropriate codes and model numbers.*) These codes are identified below:

Code	Used on
XXX	*Model XXX*
XXX	*Model XXXX*
XXX	*Model XXXXX*

Column (5) U/I. Unit of Issue (U/I) indicates the physical measurement or count of the item as issued per the National Stock Number shown in column (2).

Column (6) Qty Rqr. Indicates the quantity required."

OR

Select method B text.

"Column (1) Item Number. Gives you the reference number of the item listed.

Column (2) National Stock Number (NSN) and Illustration. Identifies the stock number of the item to be used for requisitioning purposes and provides an illustration of the item.

Column (3) Description, Part Number/(CAGEC). Identifies the Federal item name (in all capital letters) followed by a minimum description when needed. The stowage location of COEI and BII is also included in this column. The last line below the description is the part number and the Commercial and Government Entity Code (CAGEC) (in parentheses).

Column (4) Usable On Code. When applicable, gives you a code if the item you need is not the same for different models of equipment. (*Add the following only as applicable. Replace Xs with appropriate codes and model numbers.*) These codes are identified below:

Source: https://assist.dla.mil -- Downloaded: 2016-12-09T23:32Z
Check the source to verify that this is the current version before use.

Code	**Used on**
XXX	*Model XXX*
XXX	*Model XXXX*
XXX	*Model XXXXX*

Column (5) U/I. Unit of Issue (U/I) indicates the physical measurement or count of the item as issued per the National Stock Number shown in column (2).

Column (6) Qty Rqr. Indicates the quantity required."

G.5.4.4 COEI list **<coei>**. This list shall be prepared as an illustrated tabular list of components of the end item (spare/repair parts that are removed from the major end item and separately packaged or stowed for transportation or movement; includes on-board spares). The illustrations shall be placed above the list (Method A) or within the list (Method B). The arrangement of the illustrations and list shall be similar to that shown in FIGURE G-10 (Method A) or FIGURE G-11 (Method B).

G.5.4.4.1 List **<coeitab>**. The COEI list **(standard information)** shall include the headings and basic content shown in FIGURE G-10 or FIGURE G-11, applicable to the specific equipment. The description of each item shall consist of the approved Federal item name **<desc>**, followed by a short description when needed. Items shall be listed alphabetically. The part number **<partno>** shall be located below the item. The Commercial and Government Entity Code (CAGEC) **<cageno>** shall follow the part number and in parentheses. The stowage location of COEI shall also be included in the description column. When more than one model or configuration is applicable and Usable On Codes (UOC) **<uoc>** are assigned, the UOC shall appear in a separate column adjacent to the description column (refer to FIGURE G-10 or FIGURE G-11). When on-board spares <**on-board-spares**> apply, there shall be a break in the text of the list and a new heading ON-BOARD SPARES shall be used. A list of the on-board spares shall appear in the same format as required for the basic COEI list.

G.5.4.5 BII list **<bii>**. This tabular list (**standard information**) shall be prepared in the same format and include similar content (tailored to the applicable BII) as required for the COEI list. The stowage location of BII shall also be included in the description column (refer to G.5.4.4 and FIGURE G-10 or FIGURE G-11). As noted in AR 25-30 "Ensure that equipment publications for operators are listed in the basic issue items list."

G.5.5 AAL work package **(operator only) <aalwp>**. This work package shall be prepared as directed by acquiring activity and shall list all AAL items (i.e., items not issued with the end item; not listed on the end item engineering drawing as part of the end item, National Stock Number (NSN) configuration; not required to be turned in with the end item; separately authorized by MTOE, TDA, CTA, or JTA; and provided for information only). The data described in G.5.5.1 and G.5.5.4 shall be prepared.

G.5.5.1 Work package identification information **<wpidinfo>**. Work package identification information is required for this work package (refer to 4.7.9.1).

G.5.5.2 Initial setup information. Initial setup information is not required for this work package.

G.5.5.3 Introduction **<intro>**. The following introduction (text below within the quotation marks) shall be prepared and included verbatim (refer also to FIGURE G-12).

Source: https://assist.dla.mil -- Downloaded: 2016-12-09T23:32Z
Check the source to verify that this is the current version before use.

"**ADDITIONAL AUTHORIZATION LIST (AAL)**

INTRODUCTION

Scope

This work package lists additional items you are authorized for the support of the (*enter short item name*).

General

This list identifies items that do not have to accompany the (*enter short item name*) and that do not have to be turned in with it. These items are all authorized to you by CTA, MTOE, TDA, or JTA.

Explanation of Columns in the AAL

Column (1) National Stock Number (NSN). Identifies the stock number of the item to be used for requisitioning purposes.

Column (2) Description, Part Number/(CAGEC). Identifies the Federal item name (in all capital letters) followed by a minimum description when needed. The last line below the description is the part number and the Commercial and Government Entity Code (CAGEC) (in parentheses).

Column (3) Usable On Code. When applicable, gives you a code if the item you need is not the same for different models of equipment. (*Add the following only as applicable. Replace Xs with appropriate codes and model numbers.*) These codes are identified below:

Code	**Used on**
XXX	*Model XXX*
XXX	*Model XXXX*
XXX	*Model XXXXX*

Column (4) U/I. Unit of Issue (U/I) indicates the physical measurement or count of the item as issued per the National Stock Number shown in column (1).

Column (5) Qty Recm. Indicates the quantity recommended."

G.5.5.4 AAL list **<aal>**. A tabular list (**standard information**) of all additional authorized items shall be prepared. The format and general content of the list shall be prepared as shown in FIGURE G-12. The headings and subsequent information for this list shall be the same as the COEI and BII lists except the ILLUS NUMBER column required for the COEI and BII lists shall not apply since there are no illustrations used, and the QTY column shall be QTY RECM (quantity recommended). The items shall be listed alphabetically.

G.5.6 Expendable and durable items list work package **<explistwp>**. This work package shall be prepared to provide the TM user a list of all expendable and durable items called out in the TM text that are necessary to operate and/or maintain the equipment. The following data described in G.5.6.1 through G.5.6.4 shall be included.

G.5.6.1 Work package identification information **<wpidinfo>**. Work package identification information is required for this work package (refer to 4.7.9.1).

G.5.6.2 Initial setup information. Initial setup information is not required for this work package.

Source: https://assist.dla.mil -- Downloaded: 2016-12-09T23:32Z
Check the source to verify that this is the current version before use.

G.5.6.3 Introduction for expendable and durable items list work package **<intro>**. The following introduction (text below within the quotation marks) shall be prepared and included verbatim. (Refer also to FIGURE G-13).

"**EXPENDABLE AND DURABLE ITEMS LIST**

INTRODUCTION

Scope

This work package lists expendable and durable items that you will need to operate and maintain the (*enter equipment/end item name*). This list is for information only and is not authority to requisition the listed items. These items are authorized to you by CTA 50-970, Expendable/Durable Items (Except Medical, Class V Repair Parts, and Heraldic Items), CTA 50-909, Field and Garrison Furnishings and Equipment or CTA 8-100, Army Medical Department Expendable/Durable Items.

Explanation of Columns in the Expendable/Durable Items List

Column (1) Item No. This number is assigned to the entry in the list and is referenced in the narrative instructions to identify the item (e.g., Use brake fluid (WP 0098, item 5)).

Column (2) Level. This column identifies the lowest level of maintenance that requires the listed item (*include as applicable: C = Crew, O = AMC, F = Maintainer or ASB, H = BelowDepot or TASMG, D = Depot*).

Column (3) National Stock Number (NSN). This is the NSN assigned to the item which you can use to requisition it.

Column (4) Item Name, Description, Part Number/(CAGEC). This column provides the other information you need to identify the item. The last line below the description is the part number and the Commercial and Government Entity Code (CAGEC) (in parentheses).

Column (5) U/I. Unit of Issue (U/I) code shows the physical measurement or count of an item, such as gallon, dozen, gross, etc."

G.5.6.4 Expendable and durable items list **<explist>**. This list (**standard information**) shall be prepared in tabular format as shown in FIGURE G-13 and include the following information:

a. Item number
b. Lowest maintenance level
c. National Stock Number (NSN)
d. Item name or nomenclature
e. If applicable a description
f. Part number
g. Commercial and Government Entity Code (CAGEC)
h. Unit of Issue (U/I)

No illustrations shall be prepared for these items. Items appearing in the tabular list shall appear in alphabetical sequence by item name. Items to be listed shall be those approved by the acquiring activity.

Source: https://assist.dla.mil -- Downloaded: 2016-12-09T23:32Z
Check the source to verify that this is the current version before use.

G.5.7 Tool identification list work package **(Field/Aviation Maintenance Compnay (AMC) level or above only) <toolidwp>**. This work package shall be prepared as directed by the acquiring activity and shall include a list of the tools authorized to the levels of maintenance covered in the narrative portion of the TM and as referenced by the initial setups. For **DMWRs/NMWRs** a list of all special tools and test, measurement, and diagnostic equipment not contained in lower level technical manuals or in the RPSTL, and required to perform the procedures in the DMWR/NMWR, shall be included. This list shall include any special inspection equipment used only for the item that the DMWR/NMWR covers. The following data described in G.5.7.1 through G.5.7.4 shall be included.

G.5.7.1 Work package identification information **<wpidinfo>**. Work package identification information is required for this work package (refer to 4.7.9.1).

G.5.7.2 Initial setup information. Initial setup information is not required for this work package.

G.5.7.3 Introduction for tool identification list work package **<intro>**. The following introduction (text below within the quotation marks) shall be prepared and included verbatim (refer to FIGURE G-14).

"**TOOL IDENTIFICATION LIST**

INTRODUCTION

Scope

This work package lists all common tools and supplements and special tools/fixtures needed to maintain the (*insert equipment name*)."

OR

"This work package lists special tools and equipment needed to maintain the (*insert equipment name*)." ***(DMWRs/NMWRs only)***

"**Explanation of Columns in the Tool Identification List**

Column (1) Item No. This number is assigned to the entry in the list and is referenced in the initial setup to identify the item (e.g., Extractor (WP 0090, item 32)).

Column (2) Item Name. This column lists the item by noun nomenclature and other descriptive features (e.g., Gage, belt tension).

Column (3) National Stock Number (NSN). This is the National Stock Number (NSN) assigned to the item; use it to requisition the item.

Column (4) Part Number/(CAGEC). Indicates the primary number used by the manufacturer (individual, company, firm, corporation, or Government activity) which controls the design and characteristics of the item by means of its engineering drawings, specifications, standards, and inspection requirements to identify an item or range of items. The manufacturer's Commercial and Government Entity Code (CAGEC) is also included.

Column (5) Reference. This column identifies the authorizing supply catalog or RPSTL for items listed in this work package." **(Not required for DMWRs/NMWRs)**

Source: https://assist.dla.mil -- Downloaded: 2016-12-09T23:32Z
Check the source to verify that this is the current version before use.

G.5.7.4 Tool identification list **<toolidlist>**. Applicable information for this tabular list (standard information) shall be prepared, formatted as shown in FIGURE G-14, and include the following information:

a. Item number
b. Item name or nomenclature
c. National Stock Number (NSN)
d. Part Number
e. Commercial and Government Entity Code (CAGEC)
f. Reference

Item names shall be in alphabetical order. A lead-in paragraph to the tool identification list may be included.

G.5.8 Mandatory replacement parts work package **(Field/Aviation Maintenance Compnay (AMC) level or above only) <mrplwp>**. This work package shall be prepared as directed by acquiring activity and shall list all mandatory replacement parts referenced in the task initial setups and procedures. For **DMWRs/NMWRs** a mandatory replacement parts list, consisting of all items that must be replaced during the repair and overhaul of the equipment, whether or not they have been disturbed or not shall be developed. When an item or component is not disassembled based on preshop analysis (PSA), the item will not be disassembled for the sole purpose to add a mandatory part. All items that must be replaced during overhaul or repair procedures (based on usage intervals such as miles, time, or rounds fired, or replaced on a time between overhaul (TBO) interval) shall be included in the parts list table. A reference shall be made to the TM that covers the equipment. The following data described in G.5.8.1 through G.5.8.4 shall be included.

G.5.8.1 Work package identification information **<wpidinfo>**. Work package identification information is required for this work package (refer to 4.7.9.1).

G.5.8.2 Initial setup information. Initial setup information is not required for this work package.

G.5.8.3 Introduction for mandatory replacement parts work package **<intro>**. This work package shall include an introduction.

G.5.8.4 Mandatory replacement parts list **<mprl>**. This work package shall include a tabular list **<mrpl>** (**standard information**) of mandatory replacement parts. Mandatory replacement parts shall be listed (standard column headings in quotes) by item number **<itemno>** “Item No.”, part number **<partno>** and Commercial and Government Entity Code (CAGEC) **<cageno>** (CAGEC) “Part Number/(CAGEC)”, National Stock Number (NSN) **<nsn>** **“**National Stock Number (NSN)”, nomenclature **<name>** “Nomenclature”, and quantity **<qty>** “Qty”. Items shall be listed in alphanumeric order by part number (refer to FIGURE G-15).

G.5.9 Critical safety items (CSI) and flight safety critical aircraft parts (FSCAP) work package **<csi.fscap.wp>**. When specified by acquiring activity this work package shall be developed. The following data described in G.5.9.1 through G.5.9.4 shall be included in the work package.

G.5.9.1 Work package identification information **<wpidinfo>**. Work package identification information is required for this work package (refer to 4.7.9.1).

G.5.9.2 Initial setup information. Initial setup information is not required for this work package.

Source: https://assist.dla.mil -- Downloaded: 2016-12-09T23:32Z
Check the source to verify that this is the current version before use.

G.5.9.3 Critical safety items (CSI) **<csi>**. As applicable, this work package shall include a tabular listing provided by the acquiring activity. Each CSI and associated characteristic(s) shall be clearly identified within overhaul/repair procedures. The location of the critical safety procedures or processes within the **depot maintenance** work packages shall be referenced.

G.5.9.4 Flight safety critical aircraft parts **(FSCAP) (aviation only) <fscap>**. For **aircraft**, Flight Safety Critical Aircraft Parts (FSCAP) and installations identified under the FSCAP program shall require special handling during overhaul. A critical characteristic is any feature throughout the life cycle of a FSCAP, such as dimension, tolerance, finish, material or assembly, manufacturing process, inspection process, operation, field maintenance requirement, depot overhaul requirement, or other feature that if nonconforming, missing, or degraded, could cause failure or malfunction of a FSCAP. FSCAPs shall be listed (standard column headings in quotes) by their nomenclature **<name>** "Nomenclature", part number **<partno>** and Commercial and Government Entity Code CAGEC) **<cageno>** "Part Number/(CAGEC)", and critical characteristic **<desc>** "Critical Characteristic" (refer to FIGURE G-6). Throughout the work package, warnings shall be included emphasizing critical instructions to be followed. These warnings are FSCAP warnings and inserted whenever necessary.

G.5.10 Support items work package **<supitemwp>**. This work package shall be prepared as directed by acquiring activity and shall combine any the supporting lists described in G.5.4 through G.5.9, as applicable. This work package shall be developed when the data contained in these supporting lists are minimal and creating a separate work package for each list is unnecessary. The work package may include an introduction and the applicable lists described in G.5.4 through G.5.9.

G.5.10.1 Work package identification information **<wpidinfo>**. Work package identification information is required for this work package (refer to 4.7.9.1).

G.5.10.2 Initial setup information. Initial setup information is not required for this work package.

G.5.10.3 Introduction **<intro>**. The work package may include an introduction to the information.

G.5.10.4 Support items lists. The work package shall include the applicable lists described in G.5.4 through G.5.9.

G.5.11 Additional work packages **<genwp>**. When specified by the acquiring the activity additional work packages shall be prepared when the work packages previously described herein do not support the data/information to be presented.

a. Work package identification information **<wpidinfo>** is required for this work package (refer to 4.7.9.1).
b. Initial setup information is not required for this work package.

G.6 NOTES.

The notes in section 6 apply to this appendix.

Source: https://assist.dla.mil -- Downloaded: 2016-12-09T23:32Z
Check the source to verify that this is the current version before use.

TM NUMBER **0438**

FIELD MAINTENANCE REFERENCES

SCOPE

This work package lists all field manuals, forms, technical manuals and miscellaneous publications referenced in this manual.

FIELD MANUALS

FM 3-3	NBC Decontamination Avoidance
FM 3-19	NBC Reconnaissance
FM 4-25.11	First Aid for Soldiers
FM 9-207	Operation and Maintenance of Ordnance Material in Cold Weather
FM 20-22	Vehicle Recovery Operations
FM 31-70	Basic Cold Weather Manual
FM 31-71	Northern Operations
FM 90-3	Desert Operations
FM 90-6	Mountain Operations

FORMS

DA Form 2028	Recommended Changes to Publications and Blank Forms
DA Form 2062	Hand Receipt
DA Form 2404	Equipment Inspection and Maintenance Worksheet
DA Form 2408	Equipment Log Assembly (Records)
DA Form 2408-4	Weapon Record Data
DA Form 2408-9	Equipment Control Record
DA Form 2408-14	Uncorrected Fault Record
DA Form 2408-20	Oil Analysis Log
DD 518	Accident Identification Card
SF 91	Motor Vehicle Accident Report
SF 368	Product Quality Deficiency Report

TECHNICAL MANUALS

TM 9-1300-200	Ammunition, General
TM 11-5695-286-14	Hand Set Microphone
TM 750-244-6	Destruction of TACOM Equipment

END OF WORK PACKAGE

0438-1

FIGURE G-1. Example of references.

Source: https://assist.dla.mil -- Downloaded: 2016-12-09T23:32Z
Check the source to verify that this is the current version before use.

FIGURE G-2. DELETED.

FIGURE G-3. DELETED.

Source: https://assist.dla.mil -- Downloaded: 2016-12-09T23:32Z
Check the source to verify that this is the current version before use.

TM X-XXXX-XXX- **0439**

FIELD MAINTENANCE
MAINTENANCE ALLOCATION CHART (MAC)

MAINTENANCE ALLOCATION CHART (MAC)
INTRODUCTION
The Army Maintenance System MAC

This introduction provides a general explanation of all maintenance and repair functions authorized at the two maintenance levels under the Two-Level Maintenance System concept.

This MAC (immediately following the introduction) designates overall authority and responsibility for the performance of maintenance functions on the identified end item or component. The application of the maintenance functions to the end item or component shall be consistent with the capacities and capabilities of the designated maintenance levels, which are shown on the MAC in column (4) as:

Field – includes two subcolumns, Crew (C) and Maintainer (F).
Sustainment – includes two subcolumns, Below Depot (H) and Depot (D)

The maintenance to be performed at field and sustainment is described as follows:

1. Crew maintenance. The responsibility of a using organization to perform maintenance on its assigned equipment. It normally consists of inspecting, servicing, lubricating, adjusting, and replacing parts, minor assemblies, and subassemblies. The replace function for this level of maintenance is indicated by the letter "C" in the third position of the SMR code. A "C" appearing in the fourth position of the SMR code indicates complete repair is possible at the crew maintenance level.
2. Maintainer maintenance. Maintenance accomplished on a component, accessory, assembly, subassembly, plug-in unit, or other portion either on the system or after it is removed. The replace function for this level of maintenance is indicated by the letter "F" appearing in the third position of the SMR code. An "F" appearing in the fourth position of the SMR code indicates complete repair is possible at the field maintenance level. Items are returned to the user after maintenance is performed at this level.
3. Below depot sustainment. Maintenance accomplished on a component, accessory, assembly, subassembly, plug-in unit, or other portion either on the system or after it is removed. The replace function for this level of maintenance is indicated by the letter "H" appearing in the third position of the SMR code. An "H" appearing in the fourth position of the SMR code indicates complete repair is possible at the below depot sustainment maintenance level. Items are returned to the supply systems after maintenance is performed at this level.
4. Depot sustainment . Maintenance accomplished on a component, accessory, assembly, subassembly, plug-in unit, or other portion either on the system or after it is removed. The replace function for this level of maintenance is indicated by the letter "D" or "K" appearing in the third position of the SMR code. Depot sustainment maintenance can be performed by either depot personnel or contractor personnel. A "D" or "K" appearing in the fourth position of the SMR code indicates complete repair is possible at the depot sustainment maintenance level. Items are returned to the supply systems after maintenance is performed at this level.

The tools and test equipment requirements table (immediately following the MAC) lists the tools and test equipment (both special tools and common tool sets) required for each maintenance function as referenced from the MAC.

The remarks table (immediately following the tools and test equipment requirements) contains supplemental instructions and explanatory notes for a particular maintenance function.

Maintenance Functions
Maintenance functions are limited to and defined as follows:
1.Inspect. To determine the serviceability of an item by comparing its physical, mechanical, and/or electrical characteristics with established standards through examination (e.g., by sight, sound, or feel). This includes scheduled inspection and gaugings and evaluation of cannon tubes.
2. Test. To verify serviceability by measuring the mechanical, pneumatic, hydraulic, or electrical characteristics of an item and comparing those characteristics with prescribed standards on a scheduled basis, i.e., load testing of lift devices and hydrostatic testing of pressure hoses.

0439-1

FIGURE G-4. Example of standard 2 Level Maintenance MAC Introduction.

Source: https://assist.dla.mil -- Downloaded: 2016-12-09T23:32Z
Check the source to verify that this is the current version before use.

TM X-XXXX-XXX-XX **0439**

FIELD MAINTENANCE
MAINTENANCE ALLOCATION CHART (MAC)

MAINTENANCE ALLOCATION CHART (MAC)
INTRODUCTION
Aviation Maintenance Allocation Chart
The MAC (immediately following the introduction) designates overall authority and responsibility for the performance of maintenance functions on the identified end item or component. The application of the maintenance functions to the end item or component shall be consistent with the capacities and capabilities of the designated maintenance level which are shown on the MAC as:

Field - includes two columns, "O" which corresponds to Aviation Maintenance Company (AMC) and "F" which corresponds to Aviation Support Battalion (ASB)

Sustainment - includes two columns, "L" which corresponds to Theater Aviation Sustainment Maintenance Group (TASMG) and other organizations that have National Maintenance Program certification and "D" which corresponds to Depot .

The maintenance to be performed below depot and in the field is described as follows:

1. Aviation Maintenance Company (AMC). The primary purpose of the aviation maintenance company is to support the momentum of offensive operations. Composition of the AMC will be based on type of operations being supported, nature of the battlefield, and the need for flexibility. AMCs will provide forward positioning of essential maintenance repair parts and supplies, maximum use of support teams, use of airlift/air drops for resupply, for maintenance that does not interfere with the tactical plans and operations. AMCs are agile, mobile, and well equipped. They will carry limited stockpiles of demand supported, essential parts and supplies. The AMC performs battle damage assessment and repair (BDAR) and unit level repairs on Aviation Life Support Systems (ALSS). The AMC performs production control, quality control, and Maintenance Management/Maintenance Test Pilot functions. AMCs will rig aircraft for recovery operations. The AMC manages the battalion maintenance program and operates a central tool room. The AMC conducts forward arming and refueling. AMCs will be comprised of 3 to 4 modular platoons, which are configured to maintain unit level operational readiness and aircraft availability:

Headquarters Platoon - Establishes standard operating procedures, receives and processes work requests, schedules maintenance, maintains status of aircraft, coordinates inspections and test flights and return of repaired aircraft, enforces quality standards, responsible for safety. Also, obtains, stores, and issues Classes II, III, IV, and IX, prescribe load list, shop stock and authorized stockage list items.

Airframe Repair Platoon - Tailored to battalion it supports. Performs scheduled and unscheduled maintenance, troubleshoots faulty components, and removes and replaces aircraft components. Provides mission capable aircraft to support flight company operations.

Component Repair Platoon - Performs scheduled and unscheduled maintenance, troubleshoots faulty components, and removes and replaces aircraft components. Performs BDAR and manages Class IX spare/shop stock. This platoon uses Shop Equipment Contact Maintenance (SECM) trucks which are multi-capable and self-contained and are used to perform on-site maintenance using enhanced power tools, test, measurement, and diagnostic equipment, welding and cutting equipment, and an air compressor. The SECM truck is highly mobile.

Armament platoon - Only used in attack battalions and cavalry squadrons. Performs scheduled and unscheduled maintenance on armament components.

2. Aviation Support Company (ASC) in the Aviation Support Battalion (ASB). Comprised of Headquarters, Airframe, and Component Repair Platoons. Provides maintenance assistance to aviation units helping them maintain operational readiness and aircraft availability. Utilizes SECM trucks. Capable of supporting split based operations in two separate and distinct locations. Performs the following types of maintenance:

0439-1

FIGURE G-4A. Example of Aviation 2 Level Maintenance MAC Introduction.

Source: https://assist.dla.mil -- Downloaded: 2016-12-09T23:32Z
Check the source to verify that this is the current version before use.

FIGURE G-5. DELETED.

FIGURE G-6. DELETED.

Source: https://assist.dla.mil -- Downloaded: 2016-12-09T23:32Z
Check the source to verify that this is the current version before use.

TM X-XXXX-XXX-XX **0440**

FIELD MAINTENANCE
TSEC/ST-34
MAINTENANCE ALLOCATION CHART (MAC)

Table 1. MAC for TSEC/ST-34

(1) GROUP NUMBER	(2) COMPONENT/ ASSEMBLY	(3) MAINTENANCE FUNCTION	(4) MAINTENANCE LEVEL				(5) TOOLS AND EQUIPMENT REFERENCE CODE	(6) REMARKS CODE
			FIELD		SUSTAINMENT			
			CREW	MAINTAINER	BELOW DEPOT	DEPOT		
			C	F	H	D		
00	TSEC/ST-34	Inspect	0.1					A
		Service	0.2					B
		Replace	0.4				1	C, D
		Test	0.3					E
		Repair		1.5			1, 2	F
		Repair			2.0		1, 2, 3, 4, 5	G, H
		Repair				2.0	1, 2, 3, 4, 5, 6, 7, 8	I
		Overhaul				16.0	1, 2, 3, 4, 5, 6, 7, 8	J
01	POWER UNIT, STP-34	Inspect	0.1					A
		Test	0.3					E
		Repair		1.8			1, 2	F
		Repair			2.0		1, 2, 3, 4, 5	G, J
		Repair				2.0	1, 2, 3, 4, 5, 6, 7, 8	H
0101	PRINT CIRCUIT BOARDS, STP-34							
010101	E-EB/01	Inspect		0.1				A
		Replace		0.5			1, 2	A
		Test				1.0	1, 2, 3, 6, 7, 8	I
		Repair		0.5			1	
		Replace				2.0	1, 2, 3, 4, 6, 7, 8	G
010102	SWITCHING ASSEMBLY	Inspect	0.1	0.1			1	A
		Replace	0.5	0.5			1	
		Test				1.0	1, 2, 3, 6, 7, 8	
		Repair				2.0	1, 2, 3, 4, 6, 7, 8	H
02	LOGIC UNIT, STB-34	Inspect	-					A
		Test	-					E
		Repair		1.0			1, 2	F
		Repair			2.0		1, 2, 3, 4, 5	

0440-1

FIGURE G-7. Example of standard two-level MAC.

Source: https://assist.dla.mil -- Downloaded: 2016-12-09T23:32Z
Check the source to verify that this is the current version before use.

TM X XXXX-XXX-XX 0442

FIELD MAINTENANCE
AVIATION MAINTENANCE ALLOCATION CHART (MAC)

Table 1. MAC for T-XXX Turbine Engine

(1) GROUP NUMBER	(2) DESCRIPTION	(3) MAINTENANCE FUNCTION	(4) MAINTENANCE LEVEL				(5) TOOLS & EQUIP REFERENCE CODE	(6) REMARKS CODE
			FIELD		SUSTAINMENT			
			AMC (O)	ASB (F)	TASMG (L)	DEPOT (D)		
04	POWER PLANT							
0401	ENGINE, TURBINE	INSPECT	- -				1	A
		TEST	- -					B
		TEST		- -				
		TEST			- -			
		SERVICE	0.2					C
		REPLACE		0.4				
		REPAIR		0.4				
		REPAIR			0.4			A
		OVERHAUL				- -		
040101	EXTERNAL LINES & HOSES	INSPECT	- -				3	D
		TEST		- -				
		REPLACE	- -					
		REPAIR		- -				
0402	COMPRESSOR SECTION (COLD SECTION MODULE)	INSPECT	0.1					E
		INSPECT		0.2				
		TEST		- -				
		SERVICE	0.2					
		REPAIR		0.4				
		REPAIR			0.6			
		OVERHAUL				- -		

0442-1

FIGURE G-7A. <u>Example of aviation two-level MAC</u>.

Source: https://assist.dla.mil -- Downloaded: 2016-12-09T23:32Z
Check the source to verify that this is the current version before use.

Table 2. Tools and Test Equipment for TSEC/ST-34.

TOOL SORT EST EQUIPMENT	MAINTENANCE LEVEL	NOMENCLATURE	NATIONAL STOCK NUMBER	TOOL NUMBER
1	C	Automatic test system ST-51	5810-00-069-4599	TSEC/ST-51
2	F	Multimeter, digital	6625-01-139-2512	AN/PSM-45
3	H	Multimeter, digital	6625-01-145-2430	AN/USM 466
4	H	Oscilliscope	6625-01-167-7847	AN/USM 468
5	H	Power supply (0-35 VDC 24A)	6130-00-006-5224	HP 6434B 66
6	D	Power supply tester	NOT-APPLICABLE	ON502427
7	D	Repair and soldering center(page)	4940-01-031-4541	PRC-350C Aqup
8	D	Tool, kit, electronic equipment	5180-00-610-6177	TK-1056

Table 3. Remarks for TSEC/ST-34.

REMARK CODE	REMARKS
A	External.
B	Preventive maintenance checks and services (PMCS).
C	Replace rack installed unit, 0.4 hrs.
D	Bench top use only 0.1 hrs.
E	Self-test.
F	Repair by PMA and authoized component replacement only.
G	Complete unit and subassembly repair (except STP-34 switching assembly and E-EB/1).
H	Complete unit and subassembly repair.
I	In compliance with TSEC/ST-34 CIDOS.
J	Function performed by specialized repair activity (SRA). (Theater COMSEC Logistics Support Center-Europe or Lexington-Blue Grass Army Depot)

END OF WORK PACKAGE

FIGURE G-8. <u>Example of a standard two-level MAC tools and test equipment and remarks tables</u>.

Source: https://assist.dla.mil -- Downloaded: 2016-12-09T23:32Z
Check the source to verify that this is the current version before use.

TM X-XXX-XXXX-XX 0440

Table 2. Tools and Test Equipment for T-XXX Turbine Engine.

TOOLS OR TEST EQUIPMENT REF CODE	MAINTENANCE LEVEL	NOMENCLATURE	NATIONAL STOCK NUMBER	TOOL NUMBER
1	AMC	Sling, aircraft maintenance	1730-00-903-5019	LTCT 773
2	AMC	Wrench, crowfoot	5120-00-034-6193	LTCT 4810
3	ASB	Wrench, socket	5120-00-675-2588	LTCT 393
4	ASB	Wrench, spanner	5120-00-686-1794	LTCT 9263

Table 3. Remarks for T-XXX Turbine Engine.

REMARK CODE	REMARKS
A	Diagnostic inspection using borescope
B	Functional test at AVUM - engine in airframe.
C	Functional test at AVIM - engine in METS.
D	Repair at AVIM includes the engine assembly, individual line replacement units (LRU) (accessories) and modules.
E	Replace seal.
F	Repair limited to replacement of rotor assembly, stator, stage 1 nozzle, face type seal, and combustion lines.
G	Repair limited to replacement of external lines, hoses, and line replacement units (LRU) (accessories).
H	Replacement of carbon seal.
I	Reset button.
J	Water wash.
K	Visible inspection without detailed disassembly.
L	All repair and replacement of parts performed by AMC is limited to authorized items listed in T (cite specific TM).

END OF WORK PACKAGE

0440-2

FIGURE G-9. <u>Example of aviation two level MAC tools and test equipment and remarks tables</u>.

Source: https://assist.dla.mil -- Downloaded: 2016-12-09T23:32Z
Check the source to verify that this is the current version before use.

FIELD MAINTENANCE
M198 HOWITZER
COMPONENTS OF END ITEM (COEI) AND BASIC ISSUE ITEMS (BII) LISTS

INTRODUCTION

Scope

This work package lists COEI and BII for the M198 howitzer to help you inventory items for safe and efficient operation of the equipment.

General

The COEI and BII information is divided into the following lists:

Components of End Item (COEI). This list is for information purposes only and is not authority to requisition replacements. These items are part of the M198 howitzer. As part of the end item, these items must be with the end item whenever it is issued or transferred between property accounts. Items of COEI are removed and separately packaged for transportation or shipment only when necessary. Illustrations are furnished to help you find and identify the items.

Basic Issue Items (BII). These essential items are required to place the M198 howitzer in operation, operate it, and to do emergency repairs. Although shipped separately packaged, BII must be with the M198 howitzer during operation and when it is transferred between property accounts. Listing these items is your authority to request/requisition them for replacement based on authorization of the end item by the TOE/MTOE. Illustrations are furnished to help you find and identify the items.

Explanation of Columns in the COEI List and BII List

Column (1), Illus Number, gives you the number of the item illustrated.

Column (2), National Stock Number, identifies the stock number of the item to be used for requisitioning purposes.

Column (3), Description, CAGEC, and Part Number, identifies the Federal item name (in all capital letters) followed by a minimum description when needed. The stowage location of COEI and BII is also included in this column. The last line below the description is the CAGEC (commercial and Government entity code) (in parentheses) and the part number.

Column (4), Usable on Code, gives you a code if the item you need is not the same for different models of equipment. These codes are identified below:

Code	Used on
PAA	Model XXX
PAB	Model XXXX
PAC	Model XXXXX

Column (5), U/M (unit of measure), indicates how the item is issued for the National Stock Number shown in column (2).

Column (6), Qty Rqr, indicates the quantity required.

FIGURE G-10. Example of components of end item and basic issue items lists (Method A).

Source: https://assist.dla.mil -- Downloaded: 2016-12-09T23:32Z
Check the source to verify that this is the current version before use.

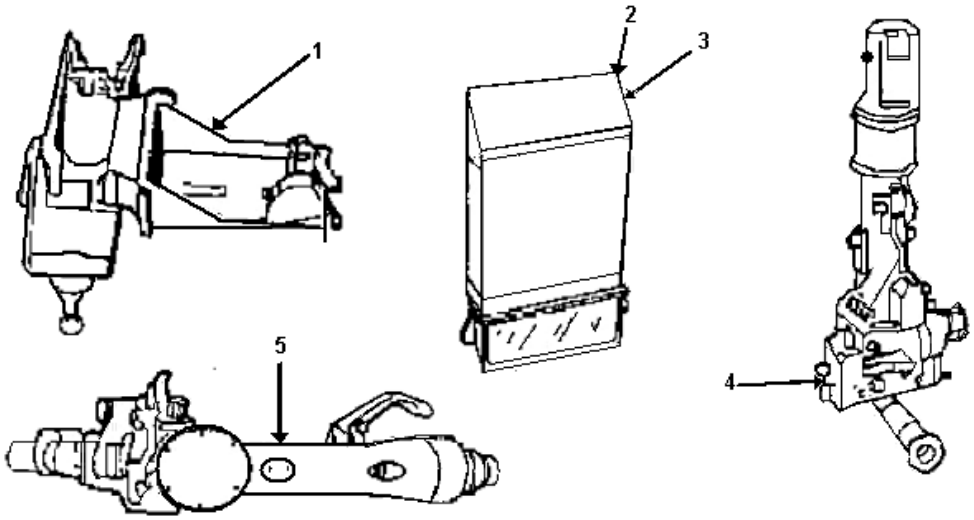

Table 1. Components Of End Item List.

(1) Illus Number	(2) National Stock Number (NSN)	(3) Description, Part Number/(CAGEC)	(4) Usable On Code	(5) U/I	(6) Qty Rqr
1	1005-00-706-8880	MOUNT, MACHINE GUN 1:cal. .50 (in mount on cupola) 7068880(19204)	PAA	EA	1
2	1240-00-344-4643	PERISCOPE:M27 (chief of section) (stowage box cab wall) 7633132(19200)	PAA	EA	1
3	1240-00-509-2743	PERISCOPE:M45 (driver's) (stowage box driver's compartment) 8213430(19200)	PAA	EA	3
4	1240-00-864-2930	TELESCOPE, PANORAMIC M117 (in mount M145 or telescope box) 7660400(19200)	PAA	EA	1
5	1240-00-491-9676	TELESCOPE, ELBOW: M118CA1 (in mount M146) 10559855(19200)	PAB	EA	1

FIGURE G-10. Example of components of end item and basic issue items lists (Method A). - Continued.

Source: https://assist.dla.mil -- Downloaded: 2016-12-09T23:32Z
Check the source to verify that this is the current version before use.

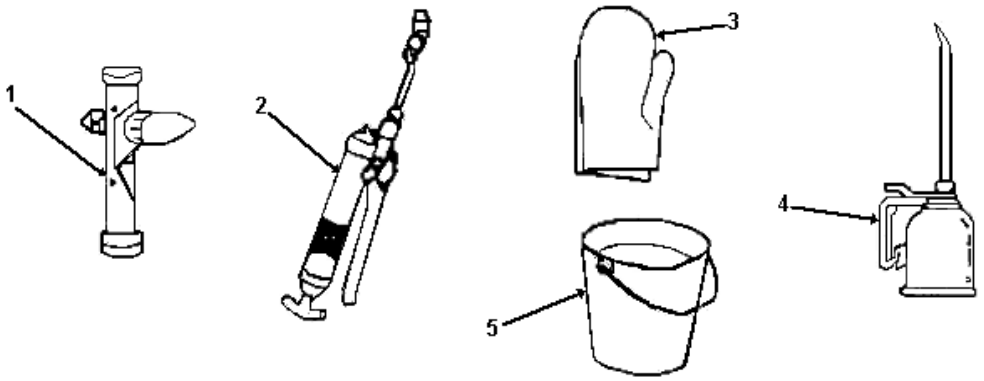

Table 2. Basic Issue Items (BII)

(1) Illus Number	(2) National Stock Number (NSN)	(3) Description, Part Number/(CAGEC)	(4) Usable On Code	(5) U/I	(6) Qty Rqr
1	1290-00-535-7629	LIGHT, AIMING POST; M14 7197188(19200)	PAA	EA	2
2	4930-00-766-3545	LUBRICATING GUN, HAND: high pressure (in tool bag) 102758(36251)	PAA	EA	1
3	8415-00-266-8843	MITTENS, CLOTH: (pair) M1942 (in oddment tray) 11655982(19207)	PAA	EA	2
4	4930-00-262-8868	OILER, HAND: steel, pump type, 1pt, spout 9 lg (in left cab door stowage box) 328(72798)	PAA	EA	1
5	7240-00-160-0455	PAIL, UTILITY: 14-qt capability (on vehicle floor) RRP35(81348)	PAA	EA	1

END OF WORK PACKAGE

0441-3/(4 blank)

FIGURE G-10. Example of components of end item and basic issue items lists (Method A). - Continued.

Source: https://assist.dla.mil -- Downloaded: 2016-12-09T23:32Z
Check the source to verify that this is the current version before use.

TM X-XXXX-XXX-XX 0441

FIELD MAINTENANCE
M198 HOWITZER
COMPONENTS OF END ITEM (COEI) AND BASIC ISSUE ITEMS (BII) LISTS

INTRODUCTION

Scope

This work package lists COEI and BII for the M198 howitzer to help you inventory items for safe and efficient operation of the equipment.

General

The COEI and BII information is divided into the following lists:

Components of End Item (COEI). This list is for information purposes only and is not authority to requisition replacements. These items are part of the M198 howitzer. As part of the end item, these items must be with the end item whenever it is issued or transferred between property accounts. Items of COEI are removed and separately packaged for transportation or shipment only when necessary. Illustrations are furnished to help you find and identify the items.

Basic Issue Items (BII). These essential items are required to place the M198 howitzer in operation, operate it, and to do emergency repairs. Although shipped separately packaged, BII must be with the M198 howitzer during operation and when it is transferred between property accounts. Listing these items is your authority to request/requisition them for replacement based on authorization of the end item by the TOE/MTOE. Illustrations are furnished to help you find and identify the items.

Explanation of Columns in the COEI List and BII List

Column (1), Illus Number, gives you the number of the item illustrated.

Column (2), National Stock Number and Illustration, identifies the stock number of the item to be used for requisitioning purposes and contains an illustration of the item.

Column (3), Description, CAGEC, and Part Number, identifies the Federal item name (in all capital letters) followed by a minimum description when needed. The stowage location of COEI and BII is also included in this column. The last line below the description is the CAGEC (commercial and Government entity code) (in parentheses) and the part number.

Column (4), Usable on Code, gives you a code if the item you need is not the same for different models of equipment. These codes are identified below:

Code	Used on
PAA	Model XXX
PAB	Model XXXX
PAC	Model XXXXX

Column (5), U/M (unit of measure), indicates how the item is issued for the National Stock Number shown in column (2).

Column (6), Qty Rqr, indicates the quantity required.

FIGURE G-11. Example of components of end item and basic issue items lists (Method B).

Source: https://assist.dla.mil -- Downloaded: 2016-12-09T23:32Z
Check the source to verify that this is the current version before use.

Table 1. Components Of End Item List.

(1) Item Number	(2) National Stock Number (NSN) and Illustration	(3) Description, Part Number/(CAGEC)	(4) Usable On Code	(5) U/I	(6) Qty Rqr
1	1005-00-706-8880 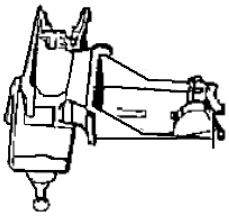	MOUNT, MACHINE GUN 1:cal. .50 (in mount on cupola) 7068880(19204)	PAA	EA	1
2	1240-00-344-4643 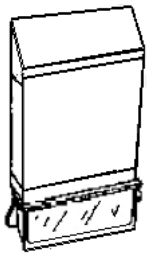	PERISCOPE:M27 (chief of section) (stowage box cab wall) 7633132(19200)	PAA	EA	1
3	1240-00-509-2743 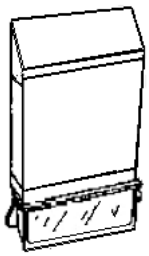	PERISCOPE:M45 (driver's) (stowage box driver's compartment) 8213430(19200)	PAA	EA	3
4	1240-00-864-2930 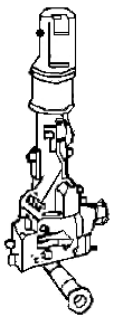	TELESCOPE, PANORAMIC M117 (in mount M145 or telescope box) 7660400(19200)	PAA	EA	1
5	1240-00-491-9676 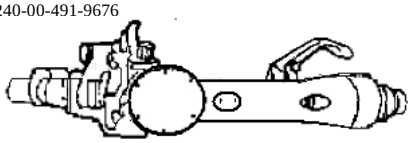	TELESCOPE, ELBOW: M118CA1 (in mount M146) 10559855(19200)	PAB	EA	1

FIGURE G-11. Example of components of end item and basic issue items lists (Method B). - Continued

Source: https://assist.dla.mil -- Downloaded: 2016-12-09T23:32Z
Check the source to verify that this is the current version before use.

Table 2. Basic Issue Items (BII)

(1) Item Number	(2) National Stock Number (NSN) and Illustration	(3) Description, Part Number/(CAGEC)	(4) Usable On Code	(5) U/I	(6) Qty Rqr
1	1290-00-535-7629 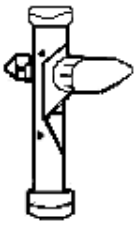	LIGHT, AIMING POST; M14 7197188(19200)	PAA	EA	2
2	4930-00-766-3545	LUBRICATING GUN, HAND : high pressure (in tool bag) 102758(36251)	PAA	EA	1
3	8415-00-266-8843	MITTENS, CLOTH : (pair) M1942 (in oddment tray) 11655982(19207)	PAA	EA	2
4	4930-00-262-8868	OILER, HAND : steel, pump type, 1pt, spout 9 lg (in left cab door stowage box) 328(72798)	PAA	EA	1
5	7240-00-160-0455	PAIL, UTILITY : 14-qt capability (on vehicle floor) RRP35(81348)	PAA	EA	1

END OF WORK PACKAGE

FIGURE G-11. Example of components of end item and basic issue items lists (Method B). - Continued

Source: https://assist.dla.mil -- Downloaded: 2016-12-09T23:32Z
Check the source to verify that this is the current version before use.

FIELD MAINTENANCE
NBCRS FOX M93A1
ADDITIONAL AUTHORIZATION LIST

INTRODUCTION

Scope

This work package lists additional items you are authorized for the support of the NBCRS FOX M93A1.

General
This list identifies items that do not have to accompany the NBCRS FOX M93A1 and that do not have to be turned in with it. These items are all authorized to you by CTA, MTOE, TDA, or JTA.

Explanations of Columns in the AAL
Column (1), National Stock Number, identifies the stock number of the item to be used for requisitioning purposes.
Column (2), Description, CAGEC, and Part Number, identifies the Federal item name (in all capital letters) followed by a minimum description when needed. The last line below the description is the CAGEC (Commercial and Government Entity Code) (in parentheses) and the part number.

Column (3), Usable On Code, when applicable, gives you a code if the item you need is not the same for different models of equipment.

Column (4), U/M (unit of measure), indicates how the item is issued for the National Stock Number shown in column (1).
Column (5), Qty Recm, indicates the quantity recommended.

Table 1. Additional Authorization List.

(1) National Stock Number (NSN)	(2) Description, Part Number/(CAGEC)	(3) Usable On Code	(4) U/I	(5) Qty Recom
6665-01-105-5623	ALARM, CHEMICAL AGENT 8762101 (19200)		EA	1
1240-01-207-5787	BINOCULARS, MOD, CON M22 9370122 (19200)		EA	1
2590-01-148-7961	CABLE KIT, SPECIAL PURPOSE 223592-2000 (19200)		EA	2
1080-00-623-7295	CAMOUFLAGE SCREEN WOODLAND/DST POLES 11655722 (34623)		EA	1
1080-00-103-1246	CAMOUFLAGE SCREEN WOODLAND RAD SCT 11655720 (34623)		EA	1
6665-01-199-4153	CHEMICAL AGENT MONITOR (CAM) 11645620 (34623)		EA	1

END OF WORK PACKAGE

0442-1/(2 BLANK)

FIGURE G-12. Example of an additional authorization list.

Source: https://assist.dla.mil -- Downloaded: 2016-12-09T23:32Z
Check the source to verify that this is the current version before use.

FIELD MAINTENANCE
NBCRS FOX M93A1
EXPENDABLE AND DURABLE ITEMS LIST

INTRODUCTION

Scope

This work package lists expendable and durable items that you will need to operate and maintain the NBCRS FOX M93A1. This list is for information only and is not authority to requisition the listed items. These items are authorized to you by CTA 50-970, Expendable/Durable Items (Except Medical, Class V Repair Parts, and Heraldic Items), or CTA 8-100, Army Medical Department Expendable/Durable Items.

Explanations of Columns in the Expendable / Durable Items List

Column (1) - Item Number. This number is assigned to the entry in the list and is referenced in the narrative instructions to identify the item (e.g., "Use brake fluid (WP 0098, Item 5).").

Column (2) - Level. This column includes the lowest level of maintenance that requires the listed item (C=Operator/Crew).

Column (3) - National Stock Number. This is the NSN assigned to the item which you can use to requisition it.

Column (4) - Item Name, Description, Commercial and Government Entity Code (CAGE), and Part Number (P/N). This column provides the other information you need to identify the item.

Column (5) - Unit of Issue (U/I). This code shows the physical measurement or count of an item, such as gallon, dozen, gross, etc.

Table 1. Expendable and Durable Items List.

(1) Item No.	(2) Level	(3) National Stock Number (NSN)	(4) Item name, Description, Part Number/(CAGEC)	(5) U/I
1	C	6810-00-201-0906	Alcohol, denatured, Grade III, 16 ounce bottle O-E-760 (81348)	BT
2	C	8030-01-138-1666	Antiseize Compound, 250-gram tube MIL-T-5344 (81349)	TU
3	C	6515-00-059-5235	Application, disposable, package of 1000 A-A-30016 (58536)	PK
4	C	8020-00-224-8024	Brush, artist, MTL ferrule, round, tapered point, Type I, camel hair H-B-118 (81348)	EA
5	C	9150-01-054-6453	Cleaner, Lubricant & Preservation (CLP), 1-pint bottle with sprayer MIL-L-63640 (81394)	P

END OF WORK PACKAGE

0059-1/(2 BLANK)

FIGURE G-13. Example of expendable and durable items list.

Source: https://assist.dla.mil -- Downloaded: 2016-12-09T23:32Z
Check the source to verify that this is the current version before use.

TOOL IDENTIFICATION LIST

FIELD MAINTENANCE
MCLIC
TOOL IDENTIFICATION LIST

INTRODUCTION

Scope

This work package lists all common tools and supplements and special tools/fixtures needed to maintain the MICLIC.

Explanation of Columns in the Tool Identification List

Column (1) - Item Number. This number is assigned to the entry in the list and is referenced in the initial setup to identify the item (e.g., "Extractor (WP 0090, item 32)").

Column (2) - Item Name. This column lists the item by noun nomenclature and other descriptive features (e.g., "Gage, belt tension").

Column (3) - National Stock Number. This is the National Stock Number (NSN) assigned to the item; use it to requisition the item.

Column (4) - Part Number/CAGEC. Indicates the primary number used by the manufacturer (individual, company, firm, corporation, or Government activity) which controls the design and characteristics of the item by means of its engineering drawings, specifications, standards, and inspection requirements to identify an item or range of items. The manufacturer's Commercial and Government Entity Code (CAGEC) is also included.

Column (5) - Reference. This column identifies the authorizing supply catalog or RPSTL for items listed in this work package.

Table 1. Tool Identification List.

(1) Item No.	(2) Item Name	(3) National Stock Number (NSN)	(4) Part Number/ (CAGEC)	(5) Reference
1	Adapter, socket wrench, 1/2 inch-3/4 inch	5120-00-114-5207	11655788-3 (81349)	TM 9-2350-252-20P-1
2	Adapter, socket wrench, 3/8 inch-1/2 inch	5120-00-240-8703	EX503B (81348)	TM 9-2350-252-20P-1
3	Adapter, test	4910-01-138-9334	11629693-1 (81348)	TM 9-2350-252-20P-1
4	Adapter, test	4910-01-138-9335	11629693-2 (81348)	TM 9-2350-252-20P-1
5	Adapter, torque wrench, 1/2 inch drive, 1/2 inch	5120-00-399-1157	2588756 (81348)	TM 9-2350-252-20P-1
6	Adapter, torque wrench, 1/2 inch drive, 3/4 inch	5120-00-399-1154	2588757 (81348)	TM 9-2350-252-20P-1
7	Adapter, torque wrench, 1/2 inch drive, 5/16 inch	5120-00-115-1891	12298105-1 (81348)	TM 9-2350-252-20P-1
8	Adapter, torque wrench, 1/2 inch drive, 15/16 inch	5120-00-215-8200	1166358-2 (81348)	TM 9-2350-252-20P-1
9	Adjusting tool, belt	4910-01-128-2670	3375058 (81348)	TM 9-2350-252-20P-1
10	Bit, screwdriver, 1/4 inch drive	5120-00-316-9228	TMC105A (81348)	TM 9-2350-252-20P-1

END OF WORK PACKAGE

0444-1/(2 BLANK)

FIGURE G-14. Example of a tool identification list.

Source: https://assist.dla.mil -- Downloaded: 2016-12-09T23:32Z
Check the source to verify that this is the current version before use.

FIELD MAINTENANCE

MANDATORY REPLACEMENT PARTS LIST

MANDATORY REPLACEMENT PARTS LIST

This work package includes a list of all mandatory replacement parts referenced in the task initial setups and procedures. These are items that must be replaced during maintenance whether they have failed or not. This includes items based on usage intervals such as miles, time, rounds fired, etc.

Table 1. Mandatory Replacment Parts List Semiannual (1500 Mile).

Item No.	Part Number/ (CAGEC)	National Stock Number (NSN)	Nomenclature	Qty
1	12286941 (19207	2940-01-086-1605	Filter assembly (part of kit, P/N 5705132)	1
2	M832481/1-014 (81349)	5330-00-166-0990	Preformed packing (item 54 is part of kit, P/N 5705132	4
3	M832481/1-115 (81349)	5330-00-166-1066	Preformed packing	2
4	M832481/1-904 (81349)	5330-00-020-0203	Preformed packing	5
5	M832481/1-905 (81349)	5330-00-167-5166	Preformed packing	2
6	M832481/1-906 (81349)	5330-00-020-0186	Preformed packing	2
7	M832481/1-908 (81349)	5330-00-020-0105	Preformed packing	3
8	M832481/1-910 (81349)	5330-00-020-0067	Preformed packing	3
9	M832481/1-916 (81349)	5330-00-165-4565	Preformed packing	1
10	MS35333-39 (96906)	5310-00-576-5752	Lockwasher	4

END OF WORK PACKAGE

0446-1/(2 BLANK)

FIGURE G-15. Example of a mandatory replacement parts list.

Source: https://assist.dla.mil -- Downloaded: 2016-12-09T23:32Z
Check the source to verify that this is the current version before use.

Table 1. Flight Safety Critical Aircraft Parts (FSCAP)

Part Number/(CAGEC)	Nomenclature	Critical Characteristics
7-211310027-3 (02731)	Cluster Gear	Process core and surface hardness.
7-113100029-3 (02731)	Spur Gear	Dimensions and contour of root area.
7-113100121-3 (02731)	Nut	Process surface hardness.
7-113100141-3 (02731)	Spindle	Process core hardness.
7-311310016-3 (02731)	Carrier Hub	Process core and surface hardness.
7-211310035-3 (02731)	Gearshaft	Process core and surface hardness.
7-211310039-5 (02731)	Gearshaft	Process core and surface hardness.
7-311310025-3 (02731)	Gear	Process core and surface hardness.

END OF WORK PACKAGE

FIGURE G-16. Example of a flight safety critical aircraft parts table.

Source: https://assist.dla.mil -- Downloaded: 2016-12-09T23:32Z
Check the source to verify that this is the current version before use.

This page intentionally left blank.

Source: https://assist.dla.mil -- Downloaded: 2016-12-09T23:32Z
Check the source to verify that this is the current version before use.

DESTRUCTION OF ARMY MATERIEL TO PREVENT ENEMY USE

H.1 SCOPE

This appendix establishes requirements to develop generic information and/or specific procedures regarding the destruction of Army materiel to prevent enemy use. This Appendix is a mandatory part of the standard. The information contained herein is intended for compliance.

H.2 APPLICABLE DOCUMENTS.

The applicable documents in section 2 of the basic standard apply to this appendix.

H.3 DEFINITIONS.

The definitions in section 3 of the basic manual apply to this appendix.

H.4 GENERAL REQUIREMENTS.

H.4.1 General. The requirements provided in this appendix provide the technical content requirements for the preparation of destruction of Army Materiel procedures. There are several approaches in preparing manuals for destruction of Army materiel. These include, but are not limited to:

a. Instructions or procedures based for a particular stock class (FSC) of materiel.
b. Procedures that provide detailed destruction instructions for specific weapons systems or equipment and any installed subsystems.
c. Simple standardized destruction methods based on the assumption that time and demolition materials may not always be available for carrying out complicated demolition or other destruction procedures.

H.4.1.1 Types of manuals. Each weapon system or major item of equipment shall have destruction procedures prepared that cover the approaches in b and c above. Equipment managers may direct that a generic destruction manual be developed for assets they control in approach a that are not covered in a weapons system specific manual. Equipment managers and weapons system program managers should work together to ensure that destruction procedures do not provide conflicting destruction requirements or overly duplicate destruction procedures. Duplication of destruction procedures is allowed for components in a weapons system, but only those specific procedures (see H.5.2.2) for the component shall be duplicated. Duplication of this information is preferred to having users in a combat situation looking for destruction information in multiple TMs.

H.4.1.1.1 Destruction manuals for a stock class (FSC). When directed by an AMC stock class custodian or manager, a separate destruction TM shall be prepared. The manual shall contain generic destruction procedures and when possible should include specific procedures for each item in the stock class. The requirements in H.5.1 and H.5.2 shall be used.

H.4.1.1.2 Destruction manuals/work packages for weapon systems. Each weapons system shall have destruction procedures developed. If a separate manual is used, these procedures will be contained in a minimum of two work packages. The first shall be a general information **<destruct-ginfowp>** containing the information specified in H.5.1. The second and any succeeding work packages shall contain specific destruction procedures **<destruct-materialwp>** specified in H.5.2.

Source: https://assist.dla.mil -- Downloaded: 2016-12-09T23:32Z
Check the source to verify that this is the current version before use.

H.4.2 Use of the DTD/XSLs. The DTDs referenced in this standard interpret the technical content and structure for the functional requirements contained in this standard and are mandatory for use. The XSLs referenced herein interpret the style and format. XSLs or style sheets may be used to produce final reproducible paper copy for all TMs prepared in accordance with standard. A style sheet is used to interperet the style and format for screen display. For additional information on the DTD and specific XSLs, refer to MIL-STD-2361.

H.4.3 Content structure and format. The examples provided herein are an accurate representation of the content structure and format requirements contained in this appendix and shall be followed to permit the effective use of the DTD for destruction of materiel.

H.4.4 Style and format. This standard provides style and format requirements for the technical content requirements described in this appendix. These requirements are considered mandatory and are intended for compliance.

H.4.5 Selective application and tailoring. This standard contains some requirements that may not be applicable to the preparation of all destruction technical manuals. Selective application and tailoring of requirements contained in this standard is the responsibility of the acquiring activity and shall be accomplished using Appendix A, Technical Manual Content Selection Matrixes and guidance contained in this appendix. The applicability of some requirements is also designated by one of the following statements: unless specified otherwise by the acquiring activity; as/when specified by the acquiring activity; or when specified by the acquiring activity.

H.4.6 General destruction rules. When preparing any destruction manual, the following priority guidelines shall be followed. These are provided to ensure a common approach to destruction of material.

a. Any cryptographic equipment or material shall be destroyed first.

b. Classified equipment or material is to be destroyed after any cryptographic assests. A statement to this effect shall be included in the introductory material. The statement destruction of classified material statement is required regardless of the classification of the material covered in the current TM.

c. Essential material shall be destroyed when time precludes the destruction of the entire system. In this case, essential material consists of that material identified for the system or stock class in the manual being prepared. The system manual shall include a list of essential material. A statement shall be included stating that essential material be destroyed in the order provided and that the same material be destroyed on each system (see H.5.1.6).

d. Any repair parts that may be on the verge of capture shall be destroyed in the same order as the essential material.

H.5 DETAILED REQUIREMENTS.

H.5.1 Destruction general information work package **<destruct-ginfowp>**. The destruciton general information workpackage shall have work package identification information **<wpidinfo>**. There is no initial setup required for this work package.

H.5.1.1 Work package identification information **<wpidinfo>**. Work package identification information is required for this work package (refer to 4.7.9.1).

Source: https://assist.dla.mil -- Downloaded: 2016-12-09T23:32Z
Check the source to verify that this is the current version before use.

H.5.1.2 Initial setup information. Initial setup information is not required for this work package.

H.5.1.3 Scope of manual. Each destruction general information work package shall have a scope statement. As a minimum, the scope statement shall contain the following text, entered verbatim.

"This manual is for the guidance of those whose duty it is to render inoperable or destroy equipment which is in imminent danger of capture by an enemy."

For destruction procedures that will implement any international standards, the following statement shall be included. For a stand alone destruction manual, the statement shall be in the **<destruct-ginfowp>** scope paragraph. For destruction procedures included in a weapon system manual, this statement shall be included in the "How to Use the Manual".

"Certain provisions of this technical manual (*identify by chapter, work package, paragraph, or similar manner, if appropriate*) are the subject of international standardization agreement (*insert the ABCA or ASCC standard number; the NATO, STANAG, NETR, or NEPR number; or appropriate documentary reference*). When revision or cancellation of this technical manual is proposed which will modify the international agreement concerned, the technical manual management activity will take appropriate action through international standardization channels, including departmental standardization offices, to change the agreement or make other appropriate accommodations."

H.5.1.4 Authority to destroy material. The following paragraph shall be included verbatim.

"Authorization. Only division or higher commanders have the authority to order destruction of equipment. They may however, delegate this authority to subordinate commanders when the situation demands it."

H.5.1.5 Reporting destruction. A paragraph shall be included that requires any destruction activity be reported through command channels.

H.5.1.6 General destruction information. Text shall be included that provides the user with information that is generic to most destruction processes. This data shall include, but is not limited to, the following types of information:

a. Information on types of destructive process such as burning, use of explosives, burying, or self destruction devices/techniques. This explanation shall include the advantages and disadvantages of each process.

b. For complex weapons systems, the reason to perform any subordinate destruction procedures in conjunction those for the weapons system.

c. Any considerations relative to physical location or weather related (wind, rain, temperature) that users should consider when destroying material.

d. Explanations on the priority for materiel destruction (see H.4.6).

Source: https://assist.dla.mil -- Downloaded: 2016-12-09T23:32Z
Check the source to verify that this is the current version before use.

H.5.1.7 Degree of destruction. The following information shall be included verbatim:

"Methods of Destruction. Choose methods of destruction which will cause such damage that it will be impossible to restore the equipment to a usable condition within the combat zone.

Classified Equipment. Classified equipment must be destroyed to such a degree as to prevent duplication by, or revealing means of operation or function to the enemy.

Associated Classified Documents. Any classified documents, notes, instructions, or other written material pertaining to function, operation, maintenance, or employment, including drawings or parts lists, must be destroyed in a manner to render them useless to the enemy."

H.5.1.8 Essential components and spare parts. When specified by the acquiring activity, the destruction procedures may identify essential components whose destruction will incapacitate the weapons system. In certain conditions, the destruction of essential components may be used. If destruction of essential components is allowed, statements shall be included that for each weapons system, the same components will be destroyed. A similar statement shall be included that for any spare parts requiring destruction, the same essential spare parts shall be destroyed.

If a weapons system determines component parts to be essential, they should notify the components item manager so they may identify those items for higher priority destruction in any item level destruction procedures manual.

H.5.2 Destruction procedures work package **<destruct-materialwp>**. The destruction procedures work package shall have work package identification information **<wpidinfo>**. Initial setup **<wpinfo>** is required for this work package. The destruction procedures work package shall contain only destruction procedures. All general or explanatory information shall be contained in the destruction general information work package (see H.5.1).

H.5.2.1 Work package identification information **<wpidinfo>**. Work package identification information is required for this work package (refer to 4.7.9.1).

H.5.2.2 Initial setup information. Initial setup information is not required for this work package.

H.5.2.3 Parts list. When a weapons system TM contains a requirement to allow destruction of essential or spare parts (see H.5.1.6), a list of essential components and spares shall be developed and included in the work package.

H.5.2.4 Specific destruction procedures. The destruction procedures work package shall include specific destruction procedures for the weapons system or items (for item level TMs). When required, specific procedures to destroy subordinate components shall be included. Specific destruction procedures for subordinate components shall not be referenced. As applicable, the order the procedures should be applied and the results of applying in the wrong order shall be included in this work package. When destruction procedures are developed, authors shall ensure the procedures utilize resources a soldier in the field would have readily accessible. The following methods shall be included as applicable:

a. Self destruction options.

b. Explosive devices.

c. Improper operation.

d. Fire.

Source: https://assist.dla.mil -- Downloaded: 2016-12-09T23:32Z
Check the source to verify that this is the current version before use.

e. Mechanical devices (e.g., sledgehammers, crowbars, cranes, etc.).

f. Natural surroundings (e.g., rivers, lakes, caves, burying, hiding in vegetation, etc).

As applicable, the procedures shall identify the points on the equipment that would be most advantageous to apply the above methods (e.g., where to place explosives or where to apply force with a mechanical device).

H.5.2.5 Classified equipment and documents. Special instructions for destruction of classified equipment and documents shall be provided.

H.6 NOTES.

The notes in section 6 apply to this appendix.

Source: https://assist.dla.mil -- Downloaded: 2016-12-09T23:32Z
Check the source to verify that this is the current version before use.

This page intentionally left blank.

Source: https://assist.dla.mil -- Downloaded: 2016-12-09T23:32Z
Check the source to verify that this is the current version before use.

BATTLE DAMAGE ASSESSMENT AND REPAIR (BDAR)

I.1 SCOPE

The requirements provided in this appendix provide the technical content requirements for the preparation of BDAR procedures. This appendix covers only assessment and repair of equipment failures occurring on the battlefield. This repair is sometimes limited to such means of fixing as bypassing, patching, or jury-rigging components, or the use of alternative procedures to restore the equipment/system performance to a minimum operating condition. Fix procedures in BDAR information are for use in combat only. Standard maintenance procedures are used as soon as practicable.

I.2 APPLICABLE DOCUMENTS.

The applicable documents in section 2 of the basic standard apply to this appendix.

I.3 DEFINITIONS.

The definitions in section 3 of the basic manual apply to this appendix.

I.4 GENERAL REQUIREMENTS.

1.4.1 Maintenance level. Unless otherwise specified, BDAR repair functions shall be accomplished by the following maintenance levels:

a. Field (operator/crew/service/Aviation Maintenance Company (AMC)) - performed by operator/crew or by forward organizational maintenance team (MT).

b. Field (field/Aviation Support Battalion (ASB)). - performed by field or ASB, when damage exceeds service repair capability. When required repair time or tactical conditions dictate, the damaged/failed item will be recovered or evacuated as appropriate.

I.4.2 Use of the DTD/XSLs. The DTDs referenced in this standard interpret the technical content and structure for the functional requirements contained in this standard and are mandatory for use. The XSLs referenced herein interpret the style and format. A style sheet is used to interpret the style and format for screen display. For additional information on the DTD and specific XSLs, refer to MIL-STD-2361.

I.4.3 Content structure and format. The examples provided herein are an accurate representation of the content structure and format requirements contained in this appendix and shall be followed to permit the effective use of the DTD for BDAR information.

I.4.4 Style and format. This standard provides style and format requirements for the technical content requirements described in this appendix. These requirements are considered mandatory and are intended for compliance.

Source: https://assist.dla.mil -- Downloaded: 2016-12-09T23:32Z
Check the source to verify that this is the current version before use.

I.4.5 Selective application and tailoring. This standard contains some requirements that may not be applicable to the preparation of all BDAR information. Selective application and tailoring of requirements contained in this standard is the responsibility of the acquiring activity and shall be accomplished using Appendix A, Technical Manual Content Selection Matrixes and guidance contained in this appendix. The applicability of some requirements is also designated by one of the following statements: unless specified otherwise by the acquiring activity; as/when specified by the acquiring activity; or when specified by the acquiring activity.

I.5 DETAILED REQUIREMENTS

I.5.1 Content. Content shall be directed to fix-forward battlefield conditions, that is, repairs must be made as quickly as possible and to the extent necessary to restore or maintain the applicable equipment/system. Unless otherwise specified by the acquiring activity, content and order of presentation shall be as specified in this appendix. The following statement shall appear at the beginning of each work package in the BDAR information:

> BDAR FIXES SHALL BE USED ONLY IN COMBAT OR FOR TRAINING AT THE DISCRETION OF THE COMMANDER. (AUTHORIZED TRAINING FIXES ARE LISTED IN THE BDAR TRAINING PROCEDURES WORK PACKAGE.) IN ANY CASE, DAMAGE SHALL BE REPAIRED BY STANDARD MAINTENANCE PROCEDURES AS SOON AS PRACTICABLE.

I.5.1.1 Operating procedures. Operating procedures in BDAR manuals shall be restricted to testing a system, subsystem, or component for the purpose of damage assessment, or testing after a field expedient repair has been performed. If any change to normal operating procedures is made, the new procedures to be followed shall be given.

I.5.2 BDAR information work packages. BDAR information shall consist of the following work packages:

I.5.2.1 General information work package <**bdar-geninfowp**>. This work package shall contain information that is general in nature. It shall inform the user/reader of the purpose and scope of the BDAR information and its relationship to user personnel, other publications, and the end item/system it supports. In addition, this work package shall include definitions, standards, practices, identification of responsibilities, and tasks to be performed. See FIGURE I-1 for example.

I.5.2.1.1 Work package identification information **<wpidinfo>**. Work package identification information is required for this work package (refer to 4.7.9.1).

I.5.2.1.2 Initial setup information **<wpinfo>**. Initial setup information is not required for this work package.

I.5.2.1.3 BDAR fixes statement. The BDAR fixes statement given in paragraph I.5.1 shall be included in this work package.

Source: https://assist.dla.mil -- Downloaded: 2016-12-09T23:32Z
Check the source to verify that this is the current version before use.

I.5.2.1.4 Introduction. This paragraph shall state the purpose and scope of the BDAR information and how it is applied to the task of BDAR. As a minimum, this paragraph shall contain subparagraphs as follows:

a. Purpose. This subparagraph shall contain an explanation of the purpose of the BDAR.

b. Scope. This subparagraph shall contain information on the scope of the BDAR information.

c. Application. This subparagraph shall contain Information on how to apply the BDAR information.

d. Definitions. Any terms used in the BDAR information that are new or peculiar to BDAR shall be defined. These terms shall only apply to BDAR. For manuals with BDAR included in them, these terms not be included in any other listing of terms in the manual.

e. Forms. This paragraph shall contain a reference to FM 4-30.31 for forms required for BDAR.

I.5.2.1.5 Standards and practices. This paragraph shall contain information pertaining to standards and practices peculiar to combat conditions. It shall include, as a minimum, the subparagraph headings and data (expanded as applicable) as follows:

a. BDAR Characteristics - explanation of the expediency of repair, reason for deviation from standard maintenance practices, need to take greater risks, and other characteristics peculiar to repair under combat conditions.

b. Waiver of precautions - reference to deviations from normal peacetime precautions, and if such deviations are summarized in another portion of the BDAR information, reference shall be made to that portion.

c. Operating characteristics - minimum functional combat capability criteria for the applicable end item/system.

d. Training - explanation/rationale concerning use of BDAR fixes for training and list of all BDAR procedures which are authorized for training. The fix (training) procedures shall be grouped by major system(s) or components(s) as they appear in the BDAR information. Each procedure shall be cross-referenced to the work package where it appears. The following statement shall be included:

"After completion of training, the end item/system shall be returned to full serviceable condition using regular repair procedures as applicable."

I.5.2.1.6 Tasks and responsibilities. This paragraph shall consist of tasks that may be required as a result of battlefield damage. The person/group responsible for each task shall be identified. The tasks shall appear in the order in which they should be performed. This information shall be presented in narrative form. This section shall include the following subparagraphs:

Source: https://assist.dla.mil -- Downloaded: 2016-12-09T23:32Z
Check the source to verify that this is the current version before use.

a. Tagging/identifying BDAR repairs - instructions for identifying components affected by BDAR fixes.

b. Reports - instructions for completing reports resulting from BDAR fixes.

I.5.2.1.7 Combat Threats (Aviation Only). This paragraph shall consist of the description of damage from threats confronting aircraft while on combat missions from armor-piercing, armor piercing incendiary projectiles, and high-explosive incendiary projectiles and from exposure to bombs, mortars, and artillery fragments and blasts when on the ground. The resulting effects on the metal airframe structure and follow-on effects should the mission be continued, of secondary damage such as cracks, crippling, or buckling and loss or damage to mechanical fasteners shall be given. Structure damage modes shall be defined for the type of materials and structure affected.

I.5.2.2. Battle damage assessment work package(s) <**damage-assesswp**>. There shall be multiple battle damage assessment work packages. Each of these work packages shall contain an introduction and fault assessment tables. The work packages shall be organized as follows:

a. End item. These shall be a battle damage assessment work package pertaining to the overall end item or major subsystems and its capability to perform its mission essential functions.

b. Major functional group. Unless otherwise specified by the acquiring activity, these work packages shall be titled, arranged, and correspond to the functional groups as they appear in the maintenance allocation chart (MAC) and the parts information. The total number of work packages in the BDAR information shall be determined by the number of major functional groups applicable to the equipment/system covered by the manual.

c. Auxiliary Equipment. As required, there shall be battle damage assessment work packages for any auxiliary equipment.

Each battle damage assessment work package shall be formatted and shall contain the information in paragraphs I.5.2.2.1 through I.5.2.2.5 below.

I.5.2.2.1 Work package identification information **<wpidinfo>**. Work package identification information is required for this work package (refer to 4.7.9.1).

I.5.2.2.2 Initial setup information **<wpinfo>**. Initial setup information is not required for this work package.

I.5.2.2.3 BDAR fixes statement. The BDAR fixes statement given in paragraph I.5.1 shall be included in this work package.

I.5.2.2.4 Introduction. The primary purpose of this paragraph shall be to introduce the assessment table(s) in the work package. It shall contain paragraphs that will cover the scope of the work package and application of assessment tables.

Source: https://assist.dla.mil -- Downloaded: 2016-12-09T23:32Z
Check the source to verify that this is the current version before use.

I.5.2.2.5 Fault assessment tables. This paragraph shall contain assessment tables that lead the user to a repair procedure or another chart/table that will further aid in analyzing/assessing damage. As specified by the acquiring activity, the format of assessment tables shall be either a troubleshooting procedure or a table. See figures I-2 and I-3 for examples. The assessment procedures shall be developed and arranged so that logical and expedient methods are used to locate trouble.

I.5.2.3 Repair work package <**genrepairwp**>. Unless otherwise specified by the acquiring activity, these work packages shall provide information for battlefield repair of end items, components, etc. The following types of repair work packages shall be included in the BDAR information module:

a. General repair. As required, there shall be procedures provided for items that are not necessarily associated with a specific component or subsystem of the end item.

b. End item repair. Procedures for repair of the overall end item shall be provided.

c. Major functional group repair. Unless otherwise specified by the acquiring activity, these work package(s) shall be titled, arranged, and correspond to the functional groups as they appear in the maintenance allocation chart (MAC) and the parts information. The total number of work packages in the BDAR repair information shall be determined by the number of major functional groups applicable to the equipment/system covered by the manual.

d. Auxiliary equipment. As required, procedures for repair of battle damage to auxiliary equipment shall be provided.

Each repair work package shall comply with the requirements contained in !.5.2.3.1 through I.5.2.3.5 below.

I.5.2.3.1 Work package identification information **<wpidinfo>**. Work package identification information is required for this work package (refer to 4.8.6.1).

I.5.2.3.2 Initial setup information **<wpinfo>**. Initial setup information is required for this work package (refer to 4.8.6.1.1).

I.5.2.3.3 BDAR fixes statement. The BDAR fixes statement given in paragraph I.5.1 shall be included in this work package.

I.5.2.3.4 Introduction. This paragraph shall contain subparagraphs as follows:

a. Scope - brief statement that describes the purpose and application of the overall coverage of the work package.

b. Repair procedure index - list of all procedures contained in the work package, listed in the order in which they appear. Procedures authorized for training and listed in the training fixes work package shall be boxed in.

Source: https://assist.dla.mil -- Downloaded: 2016-12-09T23:32Z
Check the source to verify that this is the current version before use.

I.5.2.3.5 Repair procedure. This paragraph shall contain the repair procedure for the item(s) covered in the work package. The format and content of these paragraphs shall be as follows:

a. General - remarks concerning general nature and causes related to the damage and repair of the item. These remarks shall be brief.

b. (Item name, trouble) - item name and the trouble shall be used as the subparagraph side head. The side head shall be followed with a general statement(s) concerning the particular type of trouble and repair to be made. Statement(s) shall be brief and as concise as possible. Subparagraphs shall be as follows:

(1) Limitations - this statement(s) shall identify the limits that would be imposed on the equipment/end item, in relation to operational capability, if the fix that follows is performed.

(2) Personnel/time required - the number of personnel and time required to accomplish the fix shall be listed as follows:

1 soldier - 1.0 hrs (express time in decimal point hours to the nearest one-tenth hour).

(3) Materials/tools - list of materials and tools (peculiar) needed to make the BDAR fix. Following each item listed shall be a reference (in parenthesis) to that item number and work package (e.g., "hose, WP 0048, item 4)." Reference to tools shall reference instructions for tool fabrication when applicable. Any other necessary information (such as quantities and sizes) shall be provided.

(4) Procedural steps - each step shall be listed numerically and placed in the sequential order in which it will be performed. Steps shall be as prescribed in 4.8.10. The last procedural step for every BDAR fix shall be: "Record BDAR action taken. When mission is complete, as soon as practical, repair the equipment/system using standard maintenance procedures."

c. Options - more than one method of making the same repair/fix. Options shall be listed in order of effectiveness and listed consecutively as option 1, option 2, etc. Each option provided under the item name/trouble paragraph side head (b. above) shall contain subparagraphs: Limitations, Personnel/time required, Materials/tools, and Procedural steps. Alternatives that do not include fixes shall also be listed as options.

d. (Item name, category) - when the basic item, identified in the section title, is divided into categories or types, each specific item shall be titled and covered within a separate paragraph. Each of these paragraphs shall contain only the information that applies to that specific item. For example: Information or procedures under a heading "high pressure" shall pertain to high pressure; low pressure information/procedures (if applicable) shall appear under the heading, "low pressure."

I.5.2.4 References work package. References for BDAR information shall be included in the references work package for the IETM. BDAR shall not have its own references work package.

Source: https://assist.dla.mil -- Downloaded: 2016-12-09T23:32Z
Check the source to verify that this is the current version before use.

I.5.2.5 Special or fabricated tools work package <**bdartoolswp**>. The special or fabricated tools work package shall consist of the following:

I.5.2.5.1 Work package identification information <**wpidinfo**>. Work package identification information is required for this work package (refer to 4.8.6.1).

I.5.2.5.2 Initial setup information <**wpinfo**>. Initial setup information is only required for this work package (refer to 4.8.6.1.1) if there are fabricated tools.

I.5.2.5.3 BDAR fixes statement. The BDAR fixes statement given in paragraph I.5.1 shall be included in this work package.

I.5.2.5.4 Content and format. This work package shall contain a list of all tools and test equipment that are required for BDAR procedures and that are not common. This list shall be prepared in accordance with the requirements for a tool identification list in paragraph G.5.7.4. When fabrication of tools is required for BDAR, this work package shall also contain fabrication instructions for those tools. The fabrication instructions shall be prepared in accordance with the requirements for an illustrated list of manufactured items contained in paragraphs E.5.3.9.4 and E.5.3.9.5.

I.5.2.6 Expendable and durable items work package. Expendable and durable items required for BDAR information shall be included in the expendable and durable items list work package for the IETM. BDAR shall not have its own expendable and durable items list work package.

I.5.2.7 Substitute materials/parts work package <**substitute-matwp**>. The substitute materials/parts work package shall consist of the following:

I.5.2.7.1 Work package identification information <**wpidinfo**>. Work package identification information is required for this work package (refer to 4.8.6.1).

I.5.2.7.2 Initial setup information <**wpinfo**>. Initial setup information is not required for this work package.

I.5.2.7.3 BDAR fixes statement. The BDAR fixes statement given in paragraph I.5.1 shall be included in this work package.

I.5.2.7.4 Content. This work package shall list materials and parts that may be used for BDAR fixes. Lists or tables shall include the primary material/part, the substitute/alternate material/part, and remarks (when applicable) that identify the limitations or degradation effected by use of the substitutes. The work package shall be divided into paragraphs by material type. When paragraphs are required, the first paragraph shall be titled introduction and shall provide a general explanation of the purpose and content of the other paragraphs. When applicable, a paragraph shall be dedicated to petroleum, oil, and lubricant (POL) substitutes. For example of alternate/substitute material listing, see Figure I-4. For examples of POL substitutes, see Figures I-5 and I-6.

I.6 NOTES.

The notes in section 6 apply to this appendix.

Source: https://assist.dla.mil -- Downloaded: 2016-12-09T23:32Z
Check the source to verify that this is the current version before use.

FIELD MAINTENANCE

BDAR INTRODUCTION

BDAR FIXES SHALL BE USED ONLY FOR TRAINING AT THE DISCRETION OF THE COMMANDER. (AUTHORIZED TRAINING FIXES ARE LISTED IN THE BDAR INTRODUCTION WORK PACKAGE, WP 0001) IN ANY CASE, DAMAGE SHALL BE REPAIRED BY STANDARD MAINTENANCE PROCEDURES AS SOON AS PRACTICABLE.

INTRODUCTION

Purpose

This technical manual (TM) is for use by operators, field, and sustainment maintenance personnel. It provides procedures and guidelines for battlefield repairs on the M113 Family of Vehicles (FOV) under the forward support maintenance concept during combat.

The purpose of Battlefield Damage Assessment and Repair (BDAR) is to rapidly return disabled combat vehicles to the operational commander by expediently fixing, by-passing, or jury-rigging components to restore the minimum essential systems required for the support of the specific combat mission or to enable the vehicle to self-recover. These repairs may be temporary and may not restore full performance capability.

Scope

This TM describes BDAR procedures applicable specifically to the M113 FOV. Expedient repairs of a general nature applicable to systems or sub-systems common to more than one combat vehicle are covered in TM 9-2350-276-BD.

Many expedient repair techniques helpful in preparing a vehicle for recovery are included in FM 20-22, Vehicle Recovery Operations. Details of such procedures are not duplicated in this TM, although certain quick fix battlefield operations, which would in some cases, prepare the vehicle for recovery or self-recovery will be described. Users of this manual should refer to FM 20-22 for further recovery associated expedient repairs.

All possible types of combat damage and failure modes can not be predicted nor are all effective field expedient repairs known. This TM provides guidelines for assessing and repairing battlefield failures of the M113 FOV and is not intended to be a complete catalog of all possible emergency repairs. The repairs described here will serve as guidelines and will stimulate the experienced operator or mechanic to devise expedients as needed to rapidly repair equipment in a combat crisis.

Application

The procedures in this manual are designed for battlefield environments and should be used in situations where standard maintenance procedures are impractical. These procedures are not meant to replace standard maintenance practices, but rather to supplement them strictly in a battlefield environment. Standard maintenance procedures will provide the most effective means of returning a damaged vehicle to ready status provided that adequate time, replacement parts, and necessary tools are available. BDAR procedures are only authorized for use in an emergency situation in a battlefield environment, and only at the direction of the commander.

BDAR techniques are not limited to simple restoration of minimum functional combat capability. If full functional capability can be restored expediently with a limited expenditure of time and assets, this should be done.

Some of the special techniques in this manual, if applied, may result in shortened life or damage to components of the M113 FOV. The commander must decide whether the risk of having one less tank available for combat outweighs the risk of applying the potentially destructive expedient repair technique. Each technique gives appropriate warnings and cautions, and lists systems limitations caused by this action.

Definitions

battlefield damage All incidents which occur on the battlefield and which prevent the vehicle from accomplishing its mission, such as combat damage, random failures, operator errors, accidents, and wear-out failures.

FIGURE I-1. Example of BDAR-geninfo work package.

Source: https://assist.dla.mil -- Downloaded: 2016-12-09T23:32Z
Check the source to verify that this is the current version before use.

Table 1. Visual Inspection

ITEM/ACTION	FAULT ISOLATION	BDAR REFERENCE
I. Engine Visually Inspect →	Damage visible: - Evaluate extent of damage using procedures in	WP 0023, Table 1
↓ No Damage Found		
II. Fuel System Visually Inspect →	Damage visible: - Evaluate extent of damage using procedures in	WP 0024, Table 1
↓ No Damage Found		
III. Cooling System Visually Inspect →	Damage visible: - Evaluate extent of damage using procedures in	WP 0025, Table 1
↓ No Damage Found		
IV. Electrical System Visually Inspect →	Damage visible: - Evaluate extent of damage using procedures in	WP 0026, Table 1
↓ No Damage Found		

FIGURE I-2. <u>Example of assessment flowchart diagram</u>.

Source: https://assist.dla.mil -- Downloaded: 2016-12-09T23:32Z
Check the source to verify that this is the current version before use.

How to use the fault assessment tables:

a. A fault assessment table is organized so the user can quickly assess a particular system or capability by asking a series of questions.

b. First, ask a question. Your response will be either a “yes” or “no”. If it is “yes”, then you have no problem so go to the next question.

c. If it is “no”, then proceed to the work package listed.

Table 1. Mobility

Does engine start/run?	If no go to WP 0032
Does tank move in “D” and “R”?	If no go to WP 0033
Are the track and suspension in tact?	If no go to WP 0034 for track repair Or go to WP 0035 for suspension repair
Does tank steer/pivot?	If no go to WP 0036
Does tank brake?	If no go to WP 0037
Does tank have full power	If no go to WP 0038

FIGURE I-3. Example of assessment table.

Source: https://assist.dla.mil -- Downloaded: 2016-12-09T23:32Z
Check the source to verify that this is the current version before use.

Table 1. Hull Spares and Repair Parts

Parts		Applies To		From Weapons System					
NSN	Description	M1 (PM)	M1A1	M2 M3 Tank	M34 A2 Track	M48 A5 Family	M60 Family	M88 Family	M109 Veh
5935-00-001-7325	Connector Plug	X	X	X					
5315-00-014-1283	Pin, Straight, Headless	X	X			X	X		
2530-00-015-2774	Spacer, Hub Track	X	X	X		X	X	X	X
4730-00-018-9566	Plug, Pipe	X	X	X		X	X	X	X
4730-00-050-4203	Fitting, Lubrication	X	X			X	X		
4730-00-050-4208	Fitting, Lubrication	X	X			X	X		
5340-00-057-3537	Clevis, Road End	X	X			X	X		
2530-01-201-4816	Roadwheel Assembly	X	X				X	X	
4730-00-080-9847	Adaptor, Straight	X	X			X	X	X	X
5340-00-088-4254	Clamp, Loop	X	X			X	X		
5340-00-088-6655	Clamp, Loop	X	X			X	X		
2920-00-088-8613		X	X				X		

FIGURE I-4. <u>Example of substitute materials/parts</u>.

Source: https://assist.dla.mil -- Downloaded: 2016-12-09T23:32Z
Check the source to verify that this is the current version before use.

Table 2. Substitute Lubricants and Hydraulic Fluids

PRIMARY				ALTERNATE		EXPEDIENT	NOTES
Lubrication Point	Temperature Range	Military Specifications	NATO Product	US or NATO Equivalent	Soviet		
Gun Bore	Above 32°F +40°F/65°F	(PL-M) MIL-L-3150 PL-S VV-L-800	02-192 0-190				Not BDAR critical
Bore Evacuator	Above 32°F +40°F/65°F	(PL-M) MIL-L-3150 PL-S VV-L-800	0-192 0-190	OE/HDO-10 MIL-L-2104 OEA, MIL-G-46167			
Breech Block	Above 32°F +40°F/65°F	(PL-M) MIL-L-3150 PL-S VV-L-800	0-192 0-190	Any MIL-L-2104 OEA, MIL-G-46167			
Grenade Dischargers	Above 32°F +40°F/65°F	(PL-M) MIL-L-3150 PL-S VV-L-800	0-192 0-190	Any MIL-L-2104 OEA, MIL-G-46167			Not BDAR critical

FIGURE I-5. <u>Example of substitute lubricants and hydraulic fluids</u>.

Source: https://assist.dla.mil -- Downloaded: 2016-12-09T23:32Z
Check the source to verify that this is the current version before use.

Table 3. Substitute Fuels for Diesel Fuel W-F-800, DF-1, and NATO-F-54

Primary Fuel	Alternate Fuel	Expedient Fuel	Military Specification	Commercial Specification
Diesel Fuel VV-F-800 DF-1 NATO-F-54	See Below	See Below	X	
	*Automotive Diesel: ASTM-D-975 (1-D and 2-D)			X
	Kerosene: ASTM-D-3699			X
	Fuel Oil: ASTM-D-396 (Numbers 1 and 2)			X
	Distillate: NATO-F-75 (Low pour point)		X	
	Kerosene: NATO-F-5B		X	
	Aviation Turbine: MIL-T-5624 (JP4 and JP5) NATO-F-40		X	X

FIGURE I-6. <u>Example of substitute fuels</u>.

Source: https://assist.dla.mil -- Downloaded: 2016-12-09T23:32Z
Check the source to verify that this is the current version before use.

CONCLUDING MATERIAL

Custodians:

Army - TM

Marine Corps - MC

Preparing Activity:

Army - TM

Review Activities:

Army - AC1, AR, AT, AV, CR,EA, MI, PT

Project Number:

TMSS 2008-005

NOTE: The activities listed above were interested in this document as of the date of this document. Since organizations and responsibilities can change , you should verify the currency of the information above using the ASSIST Online database at http://assist.daps.dla.mil/online/start.

Source: https://assist.dla.mil -- Downloaded: 2016-12-09T23:32Z
Check the source to verify that this is the current version before use.