NOT MEASUREMENT SENSITIVE

MIL-HDBK-1222
9 April 1997

MILITARY HANDBOOK

GUIDE TO THE GENERAL STYLE AND FORMAT OF U.S. ARMY WORK PACKAGE TECHNICAL MANUALS

This handbook is for guidance only.
Do not cite this document as a requirement

AMSC N/A **AREA TMSS**

DISTRIBUTION STATEMENT A. Approved for public release, distribution is unlimited

Source: https://assist.dla.mil -- Downloaded: 2016-12-09T23:59Z
Check the source to verify that this is the current version before use.

FOREWORD

1. This military handbook is approved for use by the Department of the Army and is available for use by all Departments and Agencies of the Department of Defense (DoD).

2. This handbook provides non-regulatory guidance for the preparation of technical manuals that are required to operate and maintain the various types of equipment and weapon systems within the Department of the Army. This handbook is for guidance only. This handbook cannot be cited as a requirement. If it is, the contractor does not have to comply.

3. This handbook expands and clarifies the requirements contained in MIL-STD-40051, Technical Manual Preparation, and provides recommended writing style, comprehensibility, format, and graphics requirements used by the U. S. Army for the preparation of technical manuals to the work package concept.

4. Beneficial comments (recommendations, additions, deletions) and any pertinent data which may be of use in improving this document should be addressed to: Executive Director, USAMC Logistics Support Activity, ATTN: AMXLS-AP, Redstone Arsenal, AL 35898-7466, by using the self-addressed Standardization Document Improvement Proposal (DD Form 1426) appearing at the end of this handbook or by letter.

Source: https://assist.dla.mil -- Downloaded: 2016-12-09T23:59Z
Check the source to verify that this is the current version before use.

CONTENTS

PARAGRAPH PAGE

FOREWORD i

1. SCOPE 1
1.1 Scope 1
1.2 Applicability 1

2. APPLICABLE DOCUMENTS 1
2.1 General 1
2.2 Government documents 1
2.2.1 Specifications, standards, and handbooks 1
2.2.2 Other Government documents and publications 2
2.3 Non-Government publications 2
2.4 Order of Precedence 3

3. DEFINITIONS 3
3.1 Acronyms used in this handbook 3
3.2 Definitions of selected terms 5
3.2.1 Acquiring activity 5
3.2.2 Adjust 5
3.2.3 Align 5
3.2.4 American National Standards Institute (ANSI) 5
3.2.5 Army Master Data File (AMDF) 5
3.2.6 Assembly 5
3.2.7 Auxiliary equipment 6
3.2.8 Aviation Intermediate Maintenance (AVIM) 6
3.2.9 Aviation Unit Maintenance (AVUM) 6
3.2.10 Basic Issue Items (BII) 6
3.2.11 Basis of Issue (BOI) 6
3.2.12 Block diagram 6
3.2.13 Built-in Test Equipment (BITE) 6
3.2.14 Calibrate 6
3.2.15 Callout 6
3.2.16 CALS raster 6
3.2.17 Caution 6
3.2.18 Commercial and Government Entity Code (CAGEC) 6
3.2.19 Commodity Command Standard System (CCSS) 7
3.2.20 Complete part number 7
3.2.21 Complete repair 7
3.2.22 Comprehensibility 7
3.2.23 Continuous Acquisition Life-cycle Support (CALS) 7
3.2.24 Computer Graphics Metafile (CGM) 7
3.2.25 Continuous tone photographs or drawings 7
3.2.26 Copy freeze date 7
3.2.27 "Current as of" date 7
3.2.28 Data Item Description (DID) 7
3.2.29 Department of Defense (DoD) 7

Source: https://assist.dla.mil -- Downloaded: 2016-12-09T23:59Z
Check the source to verify that this is the current version before use.

CONTENTS

PARAGRAPH PAGE

3.2.30 Department of Defense Index of Specifications and Standards (DODISS) 7
3.2.31 Depot-level maintenance 7
3.2.32 Depot Maintenance Work Requirement (DMWR) 8
3.2.33 Digital graphics forms 8
3.2.34 Direct Support (DS) maintenance 8
3.2.35 Disassemble 8
3.2.36 Document Type Definition (DTD) 8
3.2.37 Equipment Improvement Recommendation (EIR) 8
3.2.38 Expendable items. 8
3.2.39 Final Reproducible Copy (FRC) 8
3.2.40 Footer 9
3.2.41 Formatting Output Specification Instance (FOSI) 9
3.2.42 Functional diagram 9
3.2.43 Functional Group Code (FGC) 9
3.2.44 General Support (GS) maintenance 9
3.2.45 Grade Level (GL) 9
3.2.46 Graphic(s) 9
3.2.47 Halftones 9
3.2.48 Header 9
3.2.49 Horizontal (Landscape) TM format 9
3.2.50 Icon 9
3.2.51 Initial Graphics Exchange Specification (IGES) 9
3.2.52 Illustration 9
3.2.53 Index numbers and letters 10
3.2.54 Inspect 10
3.2.55 Institute of Electrical and Electronics Engineers (IEEE). 10
3.2.56 International Organization for Standardization (ISO) 10
3.2.57 Landscape mode 10
3.2.58 Legend 10
3.2.59 Line Replacement Unit (LRU) 10
3.2.60 Load limit 10
3.2.61 Logic tree 10
3.2.62 Logistics Support Analysis (LSA) 10
3.2.63 Lubricant 10
3.2.64 Maintenance Allocation Chart (MAC) 10
3.2.65 Maintenance level 10
3.2.66 Maintenance step 11
3.2.67 Marginal copy 11
3.2.68 National Item Identification Number (NIIN) 11
3.2.69 National Stock Number (NSN) 11
3.2.70 Next Higher Assembly (NHA) 11
3.2.71 Nomenclature 11
3.2.72 Note 11
3.2.73 Operator maintenance 11
3.2.74 Orphan 11
3.2.75 Overall Grade Level (OGL) 11
3.2.76 Overhaul 11

Source: https://assist.dla.mil -- Downloaded: 2016-12-09T23:59Z
Check the source to verify that this is the current version before use.

CONTENTS

PARAGRAPH PAGE

3.2.77 Part Number (P/N) 11
3.2.78 Phantom 11
3.2.79 Pictorial. 12
3.2.80 Portrait mode 12
3.2.81 Pre-screening 12
3.2.82 Preventive maintenance (scheduled maintenance) 12
3.2.83 Preventive Maintenance Checklist (PMC) 12
3.2.84 Preventive Maintenance Checks and Services (PMCS) 12
3.2.85 Readability 12
3.2.86 Reading Grade Level (RGL) 12
3.2.87 Reference designator 12
3.2.88 Reliability, Availability, Maintainability (RAM) 12
3.2.89 Remove/install 12
3.2.90 Repair 12
3.2.91 Repair part 12
3.2.92 Repair Parts and Special Tools List (RPSTL) 13
3.2.93 Replace 13
3.2.94 Revision 13
3.2.95 Schematic diagram 13
3.2.96 Sentence 13
3.2.97 Service 13
3.2.98 Source, Maintenance, and Recoverability (SMR) code 13
3.2.99 Spare part 13
3.2.100 Special tools 13
3.2.101 Specialized Repair Activity (SRA) 13
3.2.102 Standard Generalized Markup Language (SGML) 13
3.2.103 Standard Generalized Markup Language (SGML) declaration 14
3.2.104 Subassembly 14
3.2.105 Technical Manual Quality Assurance (TMQA) program 14
3.2.106 Technical Manuals (TMs) 14
3.2.107 Test 14
3.2.108 Test, Measurement, and Diagnostic Equipment (TMDE). 14
3.2.109 Text 14
3.2.110 Top-down breakdown 14
3.2.111 Unit maintenance 14
3.2.112 User 14
3.2.113 Validation 14
3.2.114 Verification 15
3.2.115 Vertical TM format 15
3.2.116 Warning 15
3.2.117 Widow 15
3.2.118 Wiring diagram 15
3.2.119 Word 15
3.2.120 Work Packages (WPs) 15

4. TECHNICAL MANUAL DEVELOPMENT 15
4.1 General. 15

Source: https://assist.dla.mil -- Downloaded: 2016-12-09T23:59Z
Check the source to verify that this is the current version before use.

CONTENTS

PARAGRAPH PAGE

4.2 Selective application and tailoring 16
4.3 Preparation of TMs in digital format 16
4.4 Style and format for printed page oriented TMs. 16
4.5 Obtaining the modular DTDs/FOSIs 17
4.6 Figures contained in this handbook 17
4.7 Copyrights, proprietary names, and advertising 17
4.7.1 Copyright/copyright credit line 17
4.7.2 Proprietary names. 17
4.7.3 Advertising 17
4.8 Development of work package technical manuals 17
4.8.1 Types of work packages 17
4.8.2 Technical manuals developed in accordance with MIL-STD-40051 17
4.8.3 Introductory information with theory of operation 18
4.8.4 Operator instructions 18
4.8.5 Troubleshooting procedures 18
4.8.6 Maintenance instructions 19
4.8.7 Repair parts and special tools lists 19
4.8.8 Supporting information 19
4.9 How to develop a work package TM 20
4.9.1 How to develop work packages 21
4.9.1.1 Development of individual work packages 21
4.9.2 Creating an outline for a TM 22
4.9.3 Development of a SGML source file 24
4.9.3.1 Work package identification numbers 24
4.9.4 Printing the TM using the FOSI 25
4.9.5 Printing the TM using a style sheet 25

5. FORMAT AND GENERAL WRITING STYLE 25
5.1 General 25
5.2 Format 25
5.2.1 Major divisions 25
5.2.2 Work packages 25
5.2.3 Paragraphs 25
5.2.4 Procedural steps 26
5.2.4.1 Procedural step levels 27
5.2.5 Tables and lists 27
5.2.5.1 Table locations 27
5.2.5.2 Table numbering 28
5.2.5.3 Table titles 28
5.2.5.4 Table format 28
5.2.5.5 Footnotes to tables 28
5.2.5.6 Table readability and use 29
5.2.5.7 Tabular information 29
5.2.5.8 Lists 29
5.2.6 Figures/illustrations 30
5.2.6.1 Figure numbering 30
5.2.6.2 Figure number and title placement 30

Source: https://assist.dla.mil -- Downloaded: 2016-12-09T23:59Z
Check the source to verify that this is the current version before use.

CONTENTS

PARAGRAPH PAGE

5.2.6.3 RPSTL figure numbering 30
5.2.6.4 Figure titles 30
5.2.6.5 Legends 30
5.2.7 Warnings, cautions, and notes 30
5.2.7.1 Format for warnings, cautions, and notes 30
5.2.8 Hazardous materials warnings with icons 31
5.2.8.1 Format for hazardous materials warnings with icons 31
5.2.8.2 Development of icons 32
5.2.9 Page sizes 32
5.2.10 Type sizes and styles 33
5.2.11 Placement of text and illustrations 38
5.2.11.1 Text formatting requirements 38
5.2.11.2 Placement of text and related illustrations 38
5.2.11.2.1 Placement of text and related illustrations for pocket TMs 38
5.2.11.3 Text Wrapping 38
5.2.11.4 Illustration placement options 38
5.2.11.5 Multiple tasks using same illustrations 39
5.2.11.6 Repeating illustrations 39
5.3 Style 39
5.3.1 Abbreviations and acronyms 39
5.3.2 Equations 39
5.3.2.1 Symbols 39
5.3.2.2 Punctuation 40
5.3.2.3 Dividing an equation 41
5.3.2.4 Alignment of equations 41
5.3.2.5 Connecting words 42
5.3.2.6 Spacing 42
5.3.2.7 Numbering and referencing to equations 42

6. GRAPHIC REQUIREMENTS 42
6.1 Illustration preparation 42
6.1.1 Illustration style and format preparation 42
6.1.2 Illustration detail and size 42
6.1.2.1 Illustration detail 42
6.1.2.2 Scale 43
6.1.2.3 Graphic size options 43
6.1.2.4 Letter size 43
6.1.2.5 Electrostatic discharge (ESD) sensitive acronym 43
6.2 Elements of illustrations 43
6.2.1 Border rules and boxes 43
6.2.2 Use of the human figure 43
6.2.3 Credit lines 43
6.2.4 Callouts 43
6.2.4.1 Index numbers 44
6.2.5 RPSTL figures 44
6.2.6 Nomenclature 44
6.2.7 Leader lines and arrowheads 45

Source: https://assist.dla.mil -- Downloaded: 2016-12-09T23:59Z
Check the source to verify that this is the current version before use.

CONTENTS

PARAGRAPH PAGE

6.2.8 Illustration legends 45
6.2.9 Color in illustrations 45
6.2.10 Identification numbers 46
6.3 Types of illustrations 46
6.3.1 Illustrations for procedures 46
6.3.2 Tool and test equipment illustrations 46
6.3.3 Illustrations of special tools and test equipment 46
6.3.4 Line drawings 46
6.3.5 Photographs 47
6.3.6 Engineering drawings 47
6.3.7 Multisection illustrations 47
6.3.8 Multiview illustrations 47
6.3.9 Foldout and multisheet illustrations 48
6.3.10 Exploded views 48
6.3.11 Locator views 49
6.3.12 Detail views 49
6.3.13 Scanned images 49
6.3.14 Cartoons 49
6.3.15 Diagrams 49
6.3.15.1 Specification requirements 49
6.3.15.2 Designations, diagrams, and symbols 49
6.3.15.3 General methods 50
6.3.15.4 Portraying signal flow 51
6.3.15.4.1 Signal connections 51
6.3.15.4.1.1 Techniques within a single sheet of a diagram 51
6.3.15.4.1.2 Techniques between sheets of a diagram 52
6.3.15.4.1.3 Techniques between diagrams 52
6.3.15.4.2 Signal difference 52
6.3.15.4.3 Signal junctions 52
6.3.15.5 Schematic and functional diagrams 53
6.3.15.5.1 Schematic diagrams 53
6.3.15.5.2 Functional diagrams 53
6.3.15.5.3 Test point identification symbols 53
6.3.15.6 Pictorial diagrams 53
6.3.15.7 Cutaway diagrams 54
6.3.15.8 Logic diagrams 54
6.3.15.9 Simplified diagrams 54
6.3.15.10 Partial diagrams 54
6.3.15.11 Test diagrams 54
6.3.15.12 Power distribution diagrams 55
6.3.15.13 Pyramid diagrams 55
6.3.15.14 Wiring and interconnection data 55
6.3.15.14.1 Cable diagrams 55
6.3.15.14.2 Wiring diagrams 56
6.3.15.14.3 Wire list 57
6.3.15.15 Piping diagrams 57
6.3.15.16 Electronic items 57

Source: https://assist.dla.mil -- Downloaded: 2016-12-09T23:59Z
Check the source to verify that this is the current version before use.

CONTENTS

PARAGRAPH PAGE

6.3.15.17 Charts and graphs as illustrations 57
6.3.15.17.1 Line graphs 58
6.4 Requirements for digital graphics files 58
6.5 Requirements for final reproducible copy 58
6.5.1 Line drawings, prescreened photographs, digitized artwork, and combination illustrations 58
6.5.1.1 Line drawings 58
6.5.1.2 Prescreened photographs 58
6.5.1.3 Digitized artwork 58
6.5.1.4 Combination illustrations 59

7. REVISIONS 59
7.1 Types of revisions 59
7.1.1 Standard revisions 59
7.1.2 Pickup revisions 59
7.1.3 Complete revisions 59
7.2 Revision format 59
7.2.1 Revised work packages 59
7.2.1.1 Additional WPs for a normal revision 60
7.2.2 Revised front and rear matter pages 60
7.2.3 Revision symbols 60
7.2.4 Supersedure notice 60

8. COMPREHENSIBILITY 60
8.1 Reading Grade Level (RGL) and target audience description 60
8.2 RGL measurements 60
8.3 Nomenclature 60
8.3.1 Nomenclature consistency and applicability 60
8.3.2 Official/approved nomenclature 60
8.3.3 Neutral terms 61
8.3.4 Military terms 61
8.3.5 Automatic electronic test and checkout terminology 61
8.4 Standard English grammar 61
8.5 Narrative, nonprocedural text 61
8.6 Procedural text 61
8.6.1 Lead-in 61
8.6.2 Form and content of procedures 61
8.6.3 Limitations for procedural text 62
8.6.4 Sentences in procedures 62
8.6.5 Positive form 62

9. SECURITY CLASSIFICATION MARKINGS 62
9.1 General 62
9.2 Overall classification 62
9.3 Classification of table of contents 62
9.4 Classification of chapter 62
9.5 Classification of work packages 63

Source: https://assist.dla.mil -- Downloaded: 2016-12-09T23:59Z
Check the source to verify that this is the current version before use.

CONTENTS

PARAGRAPH PAGE

9.6 Classification of pages 63
9.7 Paragraph and table markings 63
9.8 Illustration markings 63
9.9 Downgrading/Declassification 63
9.9.1 Downgrading/declassification notice 63
9.9.2 Downgrading procedures 64
9.9.3 Declassification procedures 64
9.10 Reprinting classified publications. 64

10. NOTES. 65
10.1 Intended Use 65
10.2 Subject term (key word) listing 65

FIGURE PAGE

1 Example of an information oriented work package 67
2 Example of a task oriented work package 70
3 Partial sample of a filled out TM content selection matrix 72
4 Sample of a SGML source file 76
5 Example of footnotes for tables 80
6 Example of tabular information and lists 81
7 Example of a figure rotated 90 degrees 83
8 List of safety warning icons 84
9 Example of placement of warning icons in a procedure 87
10 Example of warning icons in a warning summary 89
11 List of hazardous materials warnings icons 91
12 Example of incorrect (wrapped text) and correct text placement with an illustration 93
13 Examples of digital illustration placement 94
14 Examples of equations 96
15 Example of numbering equations 98
16 Examples of size options allowed for graphics 99
17 Example of items in phantom, callouts, and illustration identification 100
18 Example of use of patterns instead of colors 101
19 Example of a multisection illustration with border rules 102
20 Example of a multiview illustration 103
21 Example of page size multisheet continuous flow diagram 104
22 Example of an exploded view illustration 106
23 Example of a locator illustration and detail view 107
24 Example of highway and point-to-point methods for signal flow 108
25 Example of oval connectors to continue 109

26 Example of signal returns and breakoff symbols to continue signals - single sheet diagram 110
27 Example of boat symbols, block technique, pyramid method to continue signals - multisheet diagram 111
28 Example of signal difference techniques 112
29 Example of subordinate and coordinate junctions 113

Source: https://assist.dla.mil -- Downloaded: 2016-12-09T23:59Z
Check the source to verify that this is the current version before use.

CONTENTS

FIGURE		PAGE
30	Example of hardware schematic diagram	114
31	Example of a functional schematic	115
32	Example of a functional block diagram	116
33	Example of a pictorial diagram	117
34	Example of a cutaway diagram	119
35	Example of a logic diagram	121
36	Example of a truth table	122
37	Example of a timing diagram	123
38	Example of a simplified diagram	124
39	Example of a partial diagram	125
40	Example of a test diagram	126
41	Example of a test setup diagram	127
42	Example of a power distribution diagram	128
43	Example of a pyramid diagram	129
44	Example of a cable diagram illustration with table	130
45	Example of a cable interconnect diagram	131
46	Example of a wiring diagram	132
47	Example of a wire list	134
48	Example of a piping diagram	135
49	Example of an electronic component card illustration	136
50	Example of an electronic equipment RPSTL illustration	137
51	Example of security classification markings for cover	138
52	Example of security classification markings for title block page	139
53	Example of security classification markings for table of contents	140
54	Example of security classification markings for chapter title page	141
55	Example of security classification markings for work package	142
56	Example of security classification markings for pages	143
57	Example of security classification markings for paragraphs	144
58	Example of security classification markings for tables	145
59	Example of security classification markings for illustrations	146
60	Example of downgrading notice on title block page	148
61	Example of a declassification notice on title block page	149

APPENDIX		PAGE
A.1	SCOPE	151
A.1.1	Scope	151
A.2	APPLICABLE DOCUMENTS	151
A.3	DEFINITIONS	151
A.4	GENERAL REQUIREMENTS	151
A.5	DETAILED REQUIREMENTS	151
A.5.1	Sampling plan for inspection	151

Source: https://assist.dla.mil -- Downloaded: 2016-12-09T23:59Z
Check the source to verify that this is the current version before use.

CONTENTS

APPENDIX PAGE

A.5.1.1 Derivation of samples 151
A.5.1.1.1 Critical scanning 151
A.5.1.1.2 Systematic sampling 151
A.5.1.2 Applicable tests 152
A.5.1.3 Extended local samples 152
A.5.1.4 Validation of readability 152
A.5.1.5 Critical scanning 152
A.5.1.5.1 Scanning criteria for procedures 152
A.5.1.5.2 Scanning criteria for nonprocedural text 152
A.5.1.5.3 Scanning criteria for illustrations and tables 152
A.5.1.6 Systematic sampling 153
A.5.1.6.1 Identifying break pages 153
A.5.1.6.2 Samples of procedural text 154
A.5.1.6.3 Samples of nonprocedural text 154
A.5.1.6.3.1 Calculation of RGL 154
A.5.1.6.3.2 Other tests on nonprocedural text 154
A.5.1.6.4 Samples of illustrations and tables 154
A.5.1.6.4.1 Sampling method for illustrations 154
A.5.1.6.4.2 Tables 154
A.5.1.7 Extended local samples 154
A.5.1.7.1 Procedural text 154
A.5.1.7.2 Nonprocedural text 154
A.5.1.7.2.1 Samples for RGL calculation 154
A.5.1.7.2.2 Other tests on nonprocedural text 154
A.5.1.7.3 Illustrations and tables 155
A.5.1.8 Special cases of sampling 155
A.5.1.8.1 Short TMs 155
A.5.1.8.2 Material already sampled 155
A.5.1.8.3 Availability of material 155
A.5.2 Reading grade level measures 155
A.5.2.1 Counts for narrative text 155
A.5.2.1.1 Words 155
A.5.2.1.3 Syllables 155
A.5.2.2 Automatic counting equipment 155
A.5.2.3 Calculation of RGL 155
A.5.2.3.1 Overall grade level 155
A.5.2.3.2 Sample grade levels 156
A.5.2.4 Manual counting technique 157

TABLE PAGE

I TM page sizes (in inches) 32
II Foldout page sizes (in inches) 32
III Style, capitalization, leading, and spacing 34

Source: https://assist.dla.mil -- Downloaded: 2016-12-09T23:59Z
Check the source to verify that this is the current version before use.

1. SCOPE.

1.1 Scope. This handbook provides non-regulatory guidance and information for the preparation of technical manuals (TM) required to operate and maintain the various types of equipment and weapon systems within the Department of the Army. It provides preferred format and general writing style, graphics, revisions, comprehensibility, and security guidance for the preparation of both paper and digital delivery of TMs. Although this handbook encourages the use of digital files, the requirement for digital files, paper, or both will be specified by the acquiring activity. This handbook provides guidance only. It cannot be cited as a requirement. If it is, the contractor does not have to comply.

1.2 Applicability. This handbook is applicable for use by the Department of the Army and supporting contractors.

2. APPLICABLE DOCUMENTS.

2.1 General. The documents listed below are not necessarily all of the documents referenced herein, but are the ones that are needed in order to fully understand the information provided by this handbook.

2.2 Government documents.

2.2.1 Specifications, standards, and handbooks. The following specifications, standards, and handbooks form a part of this document to the extent specified herein. Unless otherwise specified, the issues of these documents are those listed in the latest issue of the Department of Defense Index of Specifications and Standards (DoDISS) and supplemented thereto, and are referenced for guidance only.

SPECIFICATIONS

DEPARTMENT OF DEFENSE

MIL-PRF-28000	—	Digital Representation for Communication of Product Data: IGES Application Subsets and IGES Application Protocols.
MIL-PRF-28001	—	Markup Requirements and Generic Style Specification for Electronic Printed Output and Exchange of Text.
MIL-PRF-28002	—	Raster Graphics Representation in Binary Format, Requirements for.
MIL-PRF-28003	—	Digital Representation for Communication of Illustration Data: CGM Application Profile.

STANDARDS

DEPARTMENT OF DEFENSE

MIL-STD-12	—	Abbreviations for Use on Drawings, and in Specifications, Standards, and Technical Documents.
MIL-STD-17-1	—	Mechanical Symbols (Other Than Aeronautical, Aerospacecraft, and Spacecraft Use).

Source: https://assist.dla.mil -- Downloaded: 2016-12-09T23:59Z
Check the source to verify that this is the current version before use.

MIL-STD-17-2	—	Mechanical Symbols for Aeronautical, Aerospacecraft, and Spacecraft Use.
MIL-STD-100	—	Engineering Drawing Practices.
MIL-STD-863	—	Wiring Diagrams.
MIL-STD-1309	—	Definition of Terms for Testing, Measurement, and Diagnostics.
MIL-STD-1686	—	Electrostatic Discharge Control Program for Protection of Electrical and Electronic Parts, Assemblies, and Equipment (Excluding Electrically Initiated Explosive Devices) (Metric).
MIL-STD-2361	—	Digital Publications Development.
MIL-STD-40051	—	Technical Manual Preparation.

HANDBOOKS

DEPARTMENT OF DEFENSE

MIL-HDBK-9660	—	Handbook for DOD-Produced CD-ROM Products.

(Unless otherwise indicated, copies of the above specifications, standards and handbooks are available from Standardization Documents Order Desk, 700 Robbins Avenue, Building 4D, Philadelphia, PA 19111-5094.)

2.2.2 Other Government documents and publications. The following other Government documents and publications form a part of this handbook to the extent specified herein.

Joint Pub 1-02	—	Department of Defense Dictionary of Military and Associated Terms.
Library of Congress Catalog Number Z253.U58	—	U.S. Government Printing Office (GPO) Style Manual

(Copies of Joint Pub 1-02 are available from the National Technical Information Service. U.S. Department of Commerce, 5285 Port Royal Road, Springfield, VA 22161. Copies of the GPO Style Guide are available from the U.S. Government Printing Office, ATTN: Superintendent of Documents, Washington, DC 20402-0001.

2.3 Non-Government publications. The following documents form a part of this document to the extent specified therein. Unless otherwise specified, the issues of the documents that are DoD adopted are those listed in the latest issue of the DoDISS, and supplement thereto.

AMERICAN NATIONAL STANDARDS INSTITUTE (ANSI)

ANSI Y14.15	—	Electrical and Electronic Diagrams.

Source: https://assist.dla.mil -- Downloaded: 2016-12-09T23:59Z
Check the source to verify that this is the current version before use.

ANSI Y32.10	—	Diagrams, Fluid Power, Graphic Symbols for.
ISO 8879	—	Information Processing - Text and Office Systems - Standard Generalized Markup Language (SGML).

(Copies of the documents listed above are available from the American National Standards Institute Inc., 1430 Broadway, New York, NY 10018-3308.)

INSTITUTE FOR ELECTRICAL AND ELECTRONICS ENGINEERS (IEEE)

IEEE 91-84	—	Graphic Symbols for Logic Functions.
IEEE 200-75	—	Reference Designators for Electrical and Electronics Parts and Equipments.
IEEE 260-78	—	IEEE Standard Letter Symbols for Units of Measurement.
IEEE 280-85	—	Letter Symbols for Use in Electrical Science and Electrical Engineering.
IEEE 315A-86	—	Graphic Symbols for Electrical and Electronic Diagrams.
IEEE 945-84	—	IEEE Recommended Practice for Preferred Metric Units for Use in Electrical and Electronics Science and Technology.

(Copies of the documents listed above are available from the Institute of Electrical and Electronics Engineers, Inc., 345 East 47th Street, New York, NY 10017 or from the Standardization Documents Order Desk, 700 Robbins Avenue, Building 4D, Philadelphia, PA 19111-5094.)

2.4 Order of Precedence. In the event of a conflict between the text of this document and the references cited herein, the text of the referenced document takes precedence. Nothing in this document, however, supersedes applicable laws and regulations unless a specific exemption has been obtained.

3. DEFINITIONS.

3.1 Acronyms used in this handbook. The acronyms used in this handbook are defined as follows:

AAL	—	Additional Authorization List.
ASCII	—	American Standard Code for Information Interchange.
AMDF	—	Army Master Data File.
AMSC	—	Acquisition Management System Control.
ANSI	—	American National Standards Institute.
ASTM	—	American Society for Testing Materials.
AVIM	—	Aviation Intermediate Maintenance.
AVUM	—	Aviation Unit Maintenance.
BII	—	Basic Issue Items.
BITE	—	Built-in Test Equipment.
BOI	—	Basis of Issue.
CAGEC	—	Commercial and Government Entity Code.
CALS	—	Continuous Acquisition and Life-cycle Support.

Source: https://assist.dla.mil -- Downloaded: 2016-12-09T23:59Z
Check the source to verify that this is the current version before use.

CCSS	—	Commodity Command Standard System.
CGM	—	Computer Graphics Metafile.
COEI	—	Components of End Item.
DFAR	—	Defense Federal Acquisition Regulation Supplement.
DID	—	Data Item Description.
DMWR	—	Depot Maintenance Work Requirement.
DoD	—	Department of Defense.
DODISS	—	Department of Defense Index of Specifications and Standards.
DS	—	Direct Support.
DTD	—	Document Type Definition.
EIC	—	End Item Code.
EIR	—	Equipment Improvement Recommendation.
ESD	—	Electrostatic Discharge.
FAR	—	Federal Acquisition Regulation.
FDEP	—	Final Draft Equipment Publication.
FGC	—	Functional Group Code.
FOSI	—	Formatting Output Specification Instance.
FRC	—	Final Reproducible Copy.
GL	—	Grade Level.
GPO	—	Government Printing Office.
GS	—	General Support.
HCP	—	Hardness Critical Process.
IEEE	—	Institute of Electrical and Electronics Engineers.
IEC	—	International Electrotechnical Commission.
IGES	—	Initial Graphics Exchange Specification.
IPR	—	In-Process Review.
ISO	—	International Organization for Standardization.
JTCI	—	Joint Technical Committee for Information.
kHz	—	Kilohertz (1000 hertz).
LRU	—	Line Replaceable Unit.
LSA	—	Logistics Support Analysis.
LSAR	—	Logistics Support Analysis Record.
MAC	—	Maintenance Allocation Chart.
MWO	—	Modification Work Order.
MTOE	—	Modified Table of Organization and Equipment.
NATO	—	North Atlantic Treaty Organization.
NHA	—	Next Higher Assembly.
NIIN	—	National Item Identification Number.
NSA	—	National Security Agency.
NSN	—	National Stock Number.
OADR	—	Originating Agency's Determination Required
OGL	—	Overall Grade Level.
OJCS	—	Organization of the Joint Chiefs of Staff.
OPIM	—	Operating Instructions Information Module.
OS	—	Output Specification.
OSHA	—	Occupational Safety and Health Act.
PCB	—	Printed Circuit Board.
PMAC	—	Preliminary Maintenance Allocation Chart.
PMC	—	Preventive Maintenance Checklist.
PMCS	—	Preventive Maintenance Checks and Services.
PMS	—	Preventive Maintenance Services.

Source: https://assist.dla.mil -- Downloaded: 2016-12-09T23:59Z
Check the source to verify that this is the current version before use.

PN	—	Part Number.
QA	—	Quality Assurance.
RAM	—	Reliability, Availability, and Maintainability.
RGL	—	Reading Grade Level.
RPSTL	—	Repair Parts and Special Tools List.
SGML	—	Standard Generalized Markup Language.
SMR	—	Source, Maintenance and Recoverability.
SRA	—	Specialized Repair Activity.
TM	—	Technical Manual.
TMDE	—	Test, Measurement, and Diagnostic Equipment.
TMQA	—	Technical Manual Quality Assurance.
TMSS	—	Technical Manuals Specifications and Standards.
TRADOC	—	U.S. Army Training and Doctrine Command
USAPPC	—	United States Army Publications and Printing Command.
WP	—	Work Package.
WYSIWYG	—	What You See is What You Get.

3.2 Definitions of selected terms.

3.2.1 Acquiring activity. The DoD component, activity, or organization of a using military service, or that organization delegated by a using service, that is responsible for the selection and determination of requirements for TMs.

3.2.2 Adjust. To maintain or regulate within prescribed limits, by bringing into proper position, or by setting the operating characteristics to specified parameters.

3.2.3 Align. To adjust specified variable elements of an item to bring about optimum or desired performance.

3.2.4 American National Standards Institute (ANSI). A private sector organization which plans, develops, establishes or coordinates standards, specifications, handbooks or related documents.

3.2.5 Army Master Data File (AMDF). The files required to record, maintain, and distribute supply management data between and from Army commands to requiring activities.

3.2.6 Assembly. Two or more parts or subassemblies joined together to perform a specific function and capable of disassembly (e.g., brake assembly, fan assembly, audio frequency amplifier).

NOTE

The distinction between an assembly and subassembly is determined by the individual application. An assembly in one instance may be a subassembly in another where it forms a portion of an assembly.

3.2.7 Auxiliary equipment. Equipment, accessories, or devices which, when used with basic equipment, extend or increase its capability (e.g., Modified Table of Organization and Equipment (MTOE) items, etc.).

Source: https://assist.dla.mil -- Downloaded: 2016-12-09T23:59Z
Check the source to verify that this is the current version before use.

3.2.8 Aviation Intermediate Maintenance (AVIM). The next higher maintenance level after Unit-Organizational. Aircraft maintenance at this level is the responsibility of, and is performed by, designated maintenance activities for direct support of the using organizations. Its phases normally consist of: calibration, repair, or replacement of damaged or unserviceable parts, components or assemblies; emergency manufacture of non-available parts; and technical assistance to using organizations.

3.2.9 Aviation Unit Maintenance (AVUM). Aircraft maintenance which is the responsibility of, and is performed by, the using organization on its assigned equipment. Its phases normally consist of inspecting, servicing, lubricating, adjusting, and replacing parts, minor assemblies and subassemblies.

3.2.10 Basic Issue Items (BII). Equipment essential for operation, and to do emergency repairs, but not listed on the drawings. These items may or may not be shipped separately packaged, but must be with the equipment when it is operated or transferred between property accounts.

3.2.11 Basis of Issue (BOI). The quantity of an item (special tool) authorized for the end item density spread or for the unit level specified.

3.2.12 Block diagram. A modified schematic diagram in which each group of maintenance-significant components that together perform one or more functions is represented by a single symbol or block. The block or symbol representing the group of components shows simplified relevant input and output signals pertinent to the subject diagram.

3.2.13 Built-in Test Equipment (BITE). Any identifiable device that is part of the supported end item and is used for testing that supported end item.

3.2.14 Calibrate. To determine and cause corrections or adjustments to be made to instruments or test, measuring, and diagnostic equipment used in precision measurement. Consists of comparisons of two instruments, one of which is a certified standard of known accuracy, to detect and adjust any discrepancy in the accuracy of the instrument being compared.

3.2.15 Callout. Anything placed on an illustration to aid in identifying the objects being illustrated, such as index numbers, nomenclature, leader lines, and arrows.

3.2.16 CALS raster. Compressed scanned raster images (CCITT, Group 4) in accordance with MIL-PRF-28002.

3.2.17 Caution. A statement or some other notification about an operating or maintenance procedure, practice, or condition that, if not strictly observed, could result in damage to, or destruction of, equipment or loss of mission effectiveness.

3.2.18 Commercial and Government Entity Code (CAGEC). A five character code assigned to commercial activities that manufacture or supply items used by the Federal Government and to Government activities that control design or are responsible for the development of certain specifications, standards, or drawings which control the design of Government items. CAGE Code assignments are listed in the H4/H8 CAGE Publications.

3.2.19 Commodity Command Standard System (CCSS). A system that standardizes the wholesale logistics operations performed by the major subordinate commands of the U.S. Army Materiel Command in the management of secondary items and repair parts.

Source: https://assist.dla.mil -- Downloaded: 2016-12-09T23:59Z
Check the source to verify that this is the current version before use.

3.2.20 Complete part number. Consists of the CAGEC and part number; used for requisition processing. The CAGEC is entered on a requisition form first, followed by the part number.

3.2.21 Complete repair. Maintenance capacity, capability, and authority to perform all the corrective maintenance tasks of the repair function in a use or user environment in order to restore serviceability to a failed item. Excludes the prescriptive maintenance functions, overhaul and rebuild.

3.2.22 Comprehensibility. The completeness with which a user in the target audience understands the information in the TM.

3.2.23 Continuous Acquisition Life-cycle Support (CALS). A DoD initiative to transition from paper-intensive, non-integrated weapon systems design, manufacturing, and support processes to a highly automated and integrated mode of operation. This transition will be facilitated by acquiring, managing, and using technical data in standardized digital form.

3.2.24 Computer Graphics Metafile (CGM). A standard digital form for graphics preparation. Defined by MIL-PRF-28003.

3.2.25 Continuous tone photographs or drawings. Continuous tone photographs or drawings have a continuous gradation of tonal values ranging from light (white) to dark (black), including gray. These tonal values are not created by lines or dots.

3.2.26 Copy freeze date. A date set by the contracting activity after which no additions, deletions, or changes will be accepted to the publication material.

3.2.27 "Current as of" date. Indicates the date that all data in the Repair Parts and Special Tools List (RPSTL) were verified as being current prior to forwarding for printing.

3.2.28 Data Item Description (DID). A form used to define and describe the data required to be furnished by the contractor. Completed forms are provided to contractors in support of, and for identification of, each data item listed on the Contract Data Requirements List.

3.2.29 Department of Defense (DoD). The Office of the Secretary of Defense (OSD) (including all boards and councils), the Military Departments (Army, Navy, and Air Force), the Organization of the Joint Chiefs of Staff (OJCS), the Unified and Specified Commands, the National Security Agency (NSA), and the Defense Agencies.

3.2.30 Department of Defense Index of Specifications and Standards (DODISS). The DoD publication that lists unclassified Federal and military specifications and standards, related standardization documents, and voluntary standards approved for use by DoD.

3.2.31 Depot-level maintenance. Maintenance that is beyond the capability of the unit, direct support, and general support activities. Depot-level maintenance normally consists of overhaul, recondition, manufacture, repair, or modification and requires technical assistance beyond lower maintenance level capability.

3.2.32 Depot Maintenance Work Requirement (DMWR). A maintenance serviceability document for depot maintenance operations. The document prescribes the essential factors to ensure that an acceptable and cost-effective product is obtained. The following are some of the essential factors.

Source: https://assist.dla.mil -- Downloaded: 2016-12-09T23:59Z
Check the source to verify that this is the current version before use.

a. Scope of work to be performed by depot level maintenance facilities on an item, including organic or contract support.

b. Types and kinds of materiel to be used.

c. Quality of workmanship.

d. Repair methods, procedures, and techniques.

e. Modification requirements.

f. Fits and tolerances.

g. Equipment performance parameters to be achieved.

h. Quality assurance discipline.

3.2.33 Digital graphics forms. A standard graphics form acceptable for graphics preparation in accordance with graphic standards listed in MIL-STD-40051. These forms include CGM, CALS raster, and Initial Graphics Exchange Specification (IGES).

3.2.34 Direct Support (DS) maintenance. Maintenance accomplished on a component, accessory, assembly, subassembly, plug-in unit, or other portion either on the system or after it is removed. The replace function for this level of maintenance is indicated by the letter "F" appearing in the third position of the Source, Maintenance, Recoverability (SMR) code. An "F" appearing in the fourth position of the SMR code indicates complete repair is possible at the direct support maintenance level.

3.2.35 Disassemble. The step-by-step taking apart (or breakdown) of a spare or functional group-coded item to the level of its least componency identified as maintenance-significant (i.e., assigned an SMR code for the category of maintenance under consideration).

3.2.36 Document Type Definition (DTD). The definition of the markup rules for a given class of documents. A DTD or reference to one should be contained in any SGML conforming document.

3.2.37 Equipment Improvement Recommendation (EIR). Solicitation of suggestions from end item users/operators for means to improve the operation and effectiveness of equipment. SF 368 is the instrument by which suggested improvements are forwarded to the cognizant agency.

3.2.38 Expendable items. Items, other than repair parts, that are consumed in use (e.g., paint, lubricants, wiping rags, tape, cleaning compounds, sandpaper).

3.2.39 Final Reproducible Copy (FRC). The final document ready for reproduction and publication as an authenticated TM, including all necessary changes made as a result of validation/verification and acquisition activity conditions of acceptance or approval. The delivery media includes, but is not limited to, reproducible camera-ready copy, negatives, disks, tapes, etc., as specified. For Army, FRC equates to Final Draft Equipment Publication (FDEP).

3.2.40 Footer. One or more lines of standard text that appear at the bottom of each page (also called feet and running feet).

Source: https://assist.dla.mil -- Downloaded: 2016-12-09T23:59Z
Check the source to verify that this is the current version before use.

3.2.41 Formatting Output Specification Instance (FOSI). The FOSI interprets the style and formatting requirements of the Output Specification (OS). The FOSI can include font, leading, hyphenation characteristics, etc.

3.2.42 Functional diagram. A type of illustration in which symbols are connected by lines to show relationships among the symbols. The symbols may be rectangles or other shapes, standard electronic symbols representing components or functions, or pictorials representing equipment or components. Where appropriate, voltage readings are shown. The lines may represent procedures or processes, such as signal or logic flow, and physical items, such as wires. Functional diagram includes schematics, wiring and piping diagrams, logic diagrams, flow charts, and block diagrams.

3.2.43 Functional Group Code (FGC). A basic (usually two-position) group code assigned to identify major components, assemblies, and subassemblies to a functional system. Subordinate subfunctional groups/subassemblies are coded to relate back to the basic (top position) FGC in a sequential, Next Higher Assembly (NHA) relationship (i.e., top-down breakdown structure).

3.2.44 General Support (GS) maintenance. Maintenance accomplished on a component, accessory, assembly, subassembly, plug-in unit, or other portion either on the system or after it is removed. The replace function for this level of maintenance is indicated by the letter "H" appearing in the third position of the SMR code. An "H" appearing in the fourth position of the SMR code indicates complete repair is possible at the general support maintenance level.

3.2.45 Grade Level (GL). Level of reading comprehensibility to which a document is written. The required reading grade level of a document is specified by the contracting activity. For example a level of about ninth grade may be required for materials of a technical nature to be included in maintenance manuals.

3.2.46 Graphic(s). Any type of presentation or representation which gives a clear visual impression.

3.2.47 Halftones. Halftones are the tonal values of gray and black created by lines or dots. It is a conversion of a continuous tone print.

3.2.48 Header. One or more lines of standard text that appear at the top of each page (also called heads and running heads).

3.2.49 Horizontal (Landscape) TM format. Positioning of technical manual so that page horizontal (width) dimensions are greater than vertical (height) dimensions.

3.2.50 Icon. Pictorial representation; visual image to give immediate recognition of a hazard or to provide essential information.

3.2.51 Initial Graphics Exchange Specification (IGES). A standard digital form for graphics preparation. Defined by MIL-PRF-28000.

3.2.52 Illustration. A general term meaning graphic presentations of all types. Illustrations include pictorials, functional diagrams, and line graphs. This term is used instead of such terms as figure, graphic, drawing, diagram, and artwork.

Source: https://assist.dla.mil -- Downloaded: 2016-12-09T23:59Z
Check the source to verify that this is the current version before use.

3.2.53 Index numbers and letters. A number or letter (on a figure or an illustration) usually attached to a line or an arrow which points to an object on the illustration. This number or letter corresponds to the same number or letter in a legend or text which defines or identifies the object in the illustration.

3.2.54 Inspect. To determine the serviceability of an item by comparing its physical, mechanical, and/or electrical characteristics with established standards through examination (e.g., by sight, sound, or feel).

3.2.55 Institute of Electrical and Electronics Engineers (IEEE). Membership organization that includes engineers, scientists and students in electronics and allied fields. Founded in 1963, it has over 300,000 members and is involved with setting standards for computers and communications.

3.2.56 International Organization for Standardization (ISO). Organization that sets international standards, founded in 1946 and headquartered in Geneva. It deals with all fields except electrical and electronics, which is governed by the older International Electrotechnical Commission (IEC), also in Geneva. With regard to information processing, ISO and IEC created JTC1, the Joint Technical Committee for information technology.

3.2.57 Landscape mode. To print an image sideways on the page so that the longest edge of the form corresponds to the horizontal axis.

3.2.58 Legend. A tabular listing and explanation of the numbers or symbols on a figure or an illustration.

3.2.59 Line Replacement Unit (LRU). An item normally removed and replaced as a single unit to correct a deficiency or malfunction on a weapon system or end item of equipment.

3.2.60 Load limit. The design load for unrestricted operations, and/or the equivalent of a designated condition, for the load envelope cases consistent with any aircraft operational restrictions.

3.2.61 Logic tree. Diagram comprised of a branching series of questions, resulting in a "yes" or "no" answer, leading to determination and resolution of problem.

3.2.62 Logistics Support Analysis (LSA). The selective application of scientific and engineering efforts undertaken during the acquisition process, as part of the systems engineering process, to assist in acquiring the required support; and providing the required support during the operational phase at minimum cost.

3.2.63 Lubricant. Any solid, fluid, or semifluid material that performs a lubricating or related specialty function. Such materials include lubricating oils, greases, hydraulic fluids, damping fluids, dielectric coolants, anti-seize compounds, corrosion preventatives, and bonded or unbonded solid films.

3.2.64 Maintenance Allocation Chart (MAC). A list of equipment maintenance functions showing maintenance level. The MAC is arranged in functional group code sequence or in top-down, breakdown sequence in a logical order of disassembly following the RPSTL order of assembly/subassembly listings.

3.2.65 Maintenance level. The separation of maintenance activities or functions in the U.S. Army according to the required skills and available facilities.

Source: https://assist.dla.mil -- Downloaded: 2016-12-09T23:59Z
Check the source to verify that this is the current version before use.

3.2.66 Maintenance step. A single maintenance action, such as setting a switch to the OFF position. Usually, a step has one action, but in certain cases, there may be a series of identical actions, such as removing seven bolts.

3.2.67 Marginal copy. Copy (generally headers and footers) placed outside that portion of the page used for either text, full page tabular data, or full page illustrations, but within the printing area dimensions of the page.

3.2.68 National Item Identification Number (NIIN). The last nine digits of the National/NATO stock number. The first two digits of the NIIN identify the country assigning the number and the remaining seven digits are a serially assigned number.

3.2.69 National Stock Number (NSN). A 13-digit number assigned to a repair part to be used for requisitioning purposes.

3.2.70 Next Higher Assembly (NHA). Assembly or subassembly of which subject component(s) or subassembly are a subpart.

3.2.71 Nomenclature. The approved name or alphanumeric identifier assigned to an item, equipment, or component in agreement with an organized designation system.

3.2.72 Note. A statement or some other notification that adds, emphasizes, or clarifies essential information of special importance or interest.

3.2.73 Operator maintenance. Consists of inspecting, servicing, lubricating, adjusting, replacing, and repairing those items authorized by Logistic Support Analysis (LSA) and/or Maintenance Allocation Chart (MAC).

3.2.74 Orphan. Last line of a paragraph pushed to a new page, stranded alone (orphaned) at the top of the page without the rest of its paragraph.

3.2.75 Overall Grade Level (OGL). Computed average reading comprehensibility of specified number of document text samples. As expressed in the following formula:

OGL = 0.39(a) + 11.8(B) - 15.59 (rounded off to the nearest integer); where,

"A" is the average sentence length for all samples (ratio of words to sentences); and

"B" is the average number of syllables per word for all samples.

3.2.76 Overhaul. That maintenance effort (service/action) prescribed to restore an item to a completely serviceable/operational condition as required by maintenance standards in appropriate technical publications. Overhaul does not normally return an item to like new condition.

3.2.77 Part Number (P/N). A primary number used to identify an item used by the manufacturer (individual, company, firm, corporation, or Government activity) that controls the design, characteristics, and production of the item by means of its engineering drawings, specifications, and inspection requirements.

3.2.78 Phantom. Portraying an item (i.e., part, equipment, etc.) on an illustration with broken lines rather than solid lines to de-emphasize the item.

Source: https://assist.dla.mil -- Downloaded: 2016-12-09T23:59Z
Check the source to verify that this is the current version before use.

3.2.79 Pictorial. A type of illustration showing the physical appearance of equipment or component parts. This term is used instead of such general terms as illustration, drawing, and diagram.

3.2.80 Portrait mode. To print an image the regular way so that the longest edge of the form corresponds to the vertical axis.

3.2.81 Pre-screening. A process in which a clear material with a dot pattern or crossing opaque lines is used through which an image is photographed in making a halftone.

3.2.82 Preventive maintenance (scheduled maintenance). The performance of scheduled inspections and maintenance functions necessary to keep the equipment in serviceable condition and ready for its primary mission.

3.2.83 Preventive Maintenance Checklist (PMC). A listing of all before, during, and after operation; preventive maintenance checks, including tactical and safety checks, that the operator or crew performs to ensure that the equipment is mission capable and in good operating condition.

3.2.84 Preventive Maintenance Checks and Services (PMCS). Periodic inspection and maintenance at scheduled intervals to ensure that the equipment and its components remain mission capable and in good operating condition. In aircraft, checks are required of mandatory safety-of-flight items. Lubrication is part of PMCS.

3.2.85 Readability. Text comprehensibility measured by such variables as number of syllables, words, and sentences.

3.2.86 Reading Grade Level (RGL). A measurement of reading difficulty of text related to grade levels (such as ninth grade level, fourteenth grade level, etc.).

3.2.87 Reference designator. Letters or numbers, or both, used to identify and locate discreet units, portions thereof, and basic parts of a specific equipment, assembly, or subassembly.

3.2.88 Reliability, Availability, Maintainability (RAM). Requirements imposed on materiel systems to ensure that they are operationally ready for use when needed, will successfully perform assigned functions, and can be economically operated and maintained within the scope of logistic concepts and policies.

3.2.89 Remove/install. To remove and install the same item when required to perform service or other maintenance functions. Install may be the act of emplacing, seating, or fixing into position a spare, repair part, or module (component or assembly) in a manner to allow the proper functioning of an equipment or system.

3.2.90 Repair. The application of maintenance services (inspect, test, service, adjust, align, calibrate, and/or replace), including fault location/troubleshooting, removal/installation, and disassembly/assembly procedures, and maintenance actions to identify troubles and restore serviceability to an item by correcting specific damage, fault, malfunction, or failure in a part, subassembly, module (component or assembly), end item, or system. Repair is authorized by the LSA/MAC and the assigned maintenance level is shown as the fourth position code of the SMR code.

3.2.91 Repair part. Those support items that are an integral part of the end item or weapons system which are coded as not repairable (i.e. consumable items).

Source: https://assist.dla.mil -- Downloaded: 2016-12-09T23:59Z
Check the source to verify that this is the current version before use.

3.2.92 Repair Parts and Special Tools List (RPSTL). The technical document which contains an introduction, list of repair parts, list of special tools, NSN index, part number index, and reference designator index for a specified equipment item.

3.2.93 Replace. To remove an unserviceable spare or repair part and install a serviceable counterpart in its place. Replace is authorized by the LSA/MAC and the assigned maintenance level is shown as the third position code of the SMR code.

3.2.94 Revision. A revision is comprised of corrected, updated or additional pages or work packages to the current edition of a manual. It consists of replacement work packages that contain new or updated technical information, or improves, clarifies or corrects existing information in the current edition of the manual.

3.2.95 Schematic diagram. A graphic representation showing the interrelationship of each component or group of components in the equipment. The essential characteristic of these diagrams is that every maintenance-significant functional component is separately represented. Also, where appropriate, voltage readings shall be shown.

3.2.96 Sentence. A group of words conveying a complete thought and terminated by a semicolon, period, exclamation mark, or question mark. Headers, captions, and paragraph titles are not considered sentences.

3.2.97 Service. Operations required periodically to keep an item operating, i.e., to clean (includes decontaminate, when required), to preserve, to drain, to paint, or to replenish fuel, lubricants, chemical fluids, or gases.

3.2.98 Source, Maintenance, and Recoverability (SMR) code. The five-position code containing supply/requisitioning information, maintenance level authorization criteria, and disposition instruction. The first two positions of the SMR code determine how to get an item. The third position represents who can install, replace, or use the item. The fourth position dictates who can do complete repair on the item. The fifth position represents who determines disposition action on unserviceable items.

3.2.99 Spare part. Those support items that are an integral part of the end item or weapons system that are coded as repairable (i.e. reparable items). Spares include those equipments authorized by TOE line item plus equipments, assemblies, and modules designated as operational readiness float. TOE training equipment is excluded.

3.2.100 Special tools. Those tools that have single or peculiar application to a specific end item/system.

3.2.101 Specialized Repair Activity (SRA). A level of maintenance usually characterized by the capability to perform maintenance functions requiring specialized skills, disciplined quality control, highly sophisticated and expensive special tools, and TMDE. Its phases normally consist of adjustments, calibration, alignment, testing, troubleshooting, assembly, disassembly, fault isolation, and repair of unserviceable parts, modules, and printed circuit boards (PCB).

3.2.102 Standard Generalized Markup Language (SGML). A language for document representation that formalizes markup and frees it of system and processing dependencies.

3.2.103 Standard Generalized Markup Language (SGML) declaration. Defines which characters are used in a document instance, in which syntax the DTD is written, which SGML features are used, etc.

Source: https://assist.dla.mil -- Downloaded: 2016-12-09T23:59Z
Check the source to verify that this is the current version before use.

3.2.104 Subassembly. Two or more parts that form a portion of an assembly or a component replaceable as a whole, but having a part or parts that are individually replaceable (e.g., gun mount stand, window recoil mechanism, floating piston, intermediate frequency strip, mounting board with mounted parts).

3.2.105 Technical Manual Quality Assurance (TMQA) program. A systematic, coordinated effort to establish a high level of confidence that the TM product offered conforms to established, contractually defined technical requirements. A QA program includes efforts by the contracting activity and acquiring activity, including, but not limited to, IPRs, validation, and verification.

3.2.106 Technical Manuals (TMs). Manuals that contain instructions for the installation, operation, maintenance, and support of weapon systems, weapon system components, and support equipment. TM information may be presented, according to prior agreement between the contractor and the Government, in any form or characteristic, including hard printed copy, audio and visual displays, disks, other electronic devices, or other media. They normally include operational and maintenance instructions, parts lists, and related technical information or procedures exclusive of administrative procedures.

3.2.107 Test. To verify serviceability by measuring the mechanical, pneumatic, hydraulic, electrical, or electronic characteristics of an item and comparing those characteristics with prescribed standards.

3.2.108 Test, Measurement, and Diagnostic Equipment (TMDE). Any system or device used to evaluate the operational condition of an end item or subsystem thereof, or to identify and/or isolate any actual or potential malfunction. TMDE includes diagnostic and prognostic equipment, semiautomatic and automatic test equipment (with issued software), and calibration test or measurement equipment.

3.2.109 Text. The written parts of the technical sections excluding labels, legends, and callouts in illustrations.

3.2.110 Top-down breakdown. The pyramidal breakdown of an end item, with the top item being the complete end item. The process of breakdown is established from the engineering drawing structure in an NHA progression until the lowest reparable in each family tree group is identified. All nonreparables can be identified in like manner to establish their NHA relationships.

3.2.111 Unit maintenance. The responsibility of a using organization to perform maintenance on its assigned equipment. It normally consists of inspecting, servicing, lubricating, adjusting, and replacing parts, minor assemblies, and subassemblies. The replace function for this level of maintenance is indicated by the letter "O" in the third position of the SMR code. An "O" appearing in the fourth position of the SMR code indicates complete repair is possible at the unit maintenance level.

3.2.112 User. A person using the technical manual.

3.2.113 Validation. The process by which the contractor tests a TM for technical accuracy and adequacy, comprehensibility, and usability.

3.2.114 Verification. The final QA iteration by the Government for acceptance of the TM during which a TM is tested to determine its adequacy and operational suitability for operation and maintenance of equipment or systems using target audience personnel. The government may perform their verification by observing the contractor's validation..

Source: https://assist.dla.mil -- Downloaded: 2016-12-09T23:59Z
Check the source to verify that this is the current version before use.

3.2.115 Vertical TM format. Positioning of technical manual so that page horizontal (width) dimensions are less than vertical (height) dimensions.

3.2.116 Warning. A statement or some other notification about an operating or maintenance procedure, practice, or condition that, if not strictly observed, could result in long term health hazard, injury to, or death of personnel performing the task prescribed in the TM.

3.2.117 Widow. First line of a paragraph that is left alone (widowed) at the bottom of a page.

3.2.118 Wiring diagram. Diagram illustrating signal flow or wiring connections. Where appropriate, voltage readings shall be shown.

3.2.119 Word. Any string of characters (including letters, numbers, symbols, and groups of letters) separated from other strings by one or more spaces. Hyphenated words and contractions count as one word. For example, each of the following count as one word: couldn't; GFE; i.e.; 32,008; 19-inch; +25°F; left-hand. Thus a sentence like "The left-hand MLG door shouldn't open more than 25°." consists of 9 words.

3.2.120 Work Packages (WPs). Presentation of information functionally divided into individual task packages in the logical order of work sequence. These WPs shall be stand alone general information, descriptive, theory, operating, maintenance, troubleshooting, parts, and supporting information units containing all information required for directing task performance.

4. TECHNICAL MANUAL DEVELOPMENT.

4.1 General. This handbook is intended to provide guidance and further clarify the requirements contained in MIL-STD-40051, Standard Practice Standard: Technical Manual Preparation. The general style, format, and graphics guidance contained herein is applicable for the preparation of the following types of technical manuals developed to the work package (WP) concept.

a. Operator level (-10).

b. Unit maintenance level (-20) and unit maintenance level with Repair Parts and Special Tools List (RPSTL) (-20&P).

c. Direct support maintenance level (-30) and direct support maintenance level with RPSTL (-30&P).

d. General support maintenance level (-40) and general support maintenance level with RPSTL (-40&P).

e. Combined operator and unit maintenance levels (-12) and operator and unit maintenance levels with RPSTL (-12&P).

f. Combined operator, unit, and direct support maintenance levels (-13) and operator, unit, and direct support maintenance levels with RPSTL (-13&P).

g. Combined operator, unit, direct support, and general support maintenance levels (-14) and operator, unit, direct support, and general support maintenance levels with RPSTL (-14&P).

Source: https://assist.dla.mil -- Downloaded: 2016-12-09T23:59Z
Check the source to verify that this is the current version before use.

h. Combined unit and direct support maintenance levels (-23) and unit and direct support maintenance levels with RPSTL (-23&P).

i. Combined unit, direct support, and general support maintenance levels (-24) and unit, direct support, and general support maintenance levels with RPSTL (-24&P).

j. Combined direct support and general support maintenance levels (-34) and direct support and general support maintenance levels with RPSTL (-34&P).

k. Depot Maintenance Work Requirements (DMWR) and DMWR with RPSTL.

l. Aviation Unit Maintenance (AVUM) level (-20) and AVUM level with RPSTL (-20&P) (aircraft only).

m. Aviation Intermediate Maintenance (AVIM) level (-30) and AVIM level with RPSTL (-30&P) (aircraft only).

n. Combined AVUM and AVIM levels (-23) and AVUM and AVIM levels with RPSTL (-23&P) (aircraft only).

o. All RPSTLs (-P).

p. Aircraft troubleshooting.

q. Aircraft preventive maintenance services (PMS).

4.2 Selective application and tailoring. This handbook contains guidance which may not be applicable for the preparation of all TMs listed in 4.1. Selective application and tailoring of requirements are the responsibility of the acquiring activity and is accomplished using MIL-STD-40051. If an identifiable, written conflict exists between this handbook and the detailed content standard, the detailed content standard takes precedence.

4.3 Preparation of TMs in digital format. Technical manuals prepared in work package format and delivered digitally are Standard Generalized Markup Language (SGML) tagged and assembled using modular Document Type Definitions (DTDs). These DTDs have been developed in accordance with MIL-PRF-28001 and ISO 8879. The modular DTDs interpret the technical content and structure of the functional requirements explained in MIL-STD-40051 and this handbook.

4.4 Style and format for printed page oriented TMs. Mandatory style and format requirements are provided in MIL-STD-40051. The style and format guidance provided in this handbook is recommended for use when acquiring TMs for the U.S. Army. Modular Formatting Output Specification Instances (FOSIs), developed in accordance with MIL-PRF-28001, interpret the style and format requirements contained in MIL-STD-40051 and this handbook. Style sheets developed by the TM developer may be used in lieu of FOSIs for printing paper manuals.

4.5 Obtaining the modular DTDs/FOSIs. Information on using and obtaining the DTDs, FOSIs and associated tag and attribute descriptions, which are SGML constructs, is contained in MIL-STD-2361.

Source: https://assist.dla.mil -- Downloaded: 2016-12-09T23:59Z
Check the source to verify that this is the current version before use.

4.6 Figures contained in this handbook. The figures provided in this handbook are intended to illustrate style and format only. They should not be used for the interpretation of technical content or detailed maintenance task requirements. Text and language requirements are established by the applicable technical manual content requirements specification and this guide.

4.7 Copyrights, proprietary names, and advertising.

4.7.1 Copyright/copyright credit line. TMs should not contain copyrighted material except as specified in the Federal Acquisition Regulations (FAR) and Defense Federal Acquisition Regulation (DFAR) Supplement. When copyrighted material is included in a TM, the TM developer must obtain prior written permission from the copyright owner or authorized agent for its use. The written permission must contain a statement declaring whether or not a copyright credit line is required.

4.7.2 Proprietary names. Do not use trade names, copyrighted names, or other proprietary names applying exclusively to the product of one company unless the items cannot be adequately described because of the technical involvement, construction, or composition. In such instances, list one, and if possible, several commercial products, followed by the words "or equal." The same applies to manufacturers' part numbers or drawing numbers for minor parts where it is impractical to specify the exact requirements. If possible, define the particular characteristics required for the "or equal" products.

4.7.3 Advertising. Publication material will not contain advertising matter.

4.8 Development of work package technical manuals. The style and format guidance provided in this handbook has been established to facilitate the development of technical information for the WP concept. The WP concept is defined as a logical combination of requirements and improved presentation techniques designed to enhance digital display of page-formatted pages. A WP technical manual is specifically designed to support individual functional information or maintenance work tasks for a weapon system or equipment in accordance with the requirements of MIL-STD-40051. Refer to Appendix B for an example of a TM prepared in work package format.

4.8.1 Types of work packages. There are basically two types of work packages. The first type is information oriented work packages. (Refer to figure 1.) It provides support information such as general information about the TM or weapon system/equipment, theory of operation, and operating instructions. Additional data that supports the maintenance tasks, such as, lists of expendable and durable items, manufactured items, Components of End Item (COEI) and Basic Issue Items (BII) lists, etc. are also considered information oriented WPs. The second type of WP is task oriented. (Refer to figure 2.) Task oriented WPs reflect all required maintenance tasks at the assigned level of maintenance, and environment, material, and support equipment required for each defined task. WPs are written to reflect the engineering design, Logistics Support Analysis (LSA), approved maintenance plan, and the established repair concept (SMR Codes).

4.8.2 Technical manuals developed in accordance with MIL-STD-40051. MIL-STD-40051 contains technical content and mandatory format requirements for the preparation of technical manuals at all levels through depot. The requirements contained in MIL-STD-40051 are divided into the following specific functional elements (parts) to enhance documentation useability in performance of weapon system/equipment and component maintenance.

a. Introductory Information With Theory of Operation

b. Operator Instructions

Source: https://assist.dla.mil -- Downloaded: 2016-12-09T23:59Z
Check the source to verify that this is the current version before use.

c. Troubleshooting Procedures

d. Maintenance Instructions

e. Repair Parts and Special Tools List (RPSTL)

f. Supporting Information

Each of these parts provide instructions on how to develop and structure the required technical information into chapters containing individual work packages in a logical order of work sequence. These WPs are stand-alone units containing all information essential for directing task performance.

Author's Note: Chapters are used to divide the TM data into the specific functional information listed in paragraphs 4.8.3 through 4.8.8. For simple equipment a single chapter may suffice for each functional element. For complex weapon systems/equipment it may be necessary to create several chapters for each of the functional elements (e.g., a separate maintenance chapter for each system of an aircraft or a tank). Each chapter is made up of one or more work packages.

4.8.3 Introductory information with theory of operation. Introductory information with theory of operation data is divided into the following specific types of work packages, as applicable to the weapon system/equipment.

a. General information work package.

b. Equipment description and data work package.

c. Theory of operation work package.

d. Support data work package for repair parts; special tools; Test, Measurement, and Diagnostic Equipment (TMDE); and support equipment work package.

4.8.4 Operator instructions. Operator instructions data is divided into the following specific work packages, as applicable to the weapon system/equipment.

a. Description and use of controls and indicators work package.

b. Operation under usual conditions work package(s).

c. Operation under unusual conditions work package(s).

4.8.5 Troubleshooting procedures. Troubleshooting procedures data is divided into the following specific work packages, as applicable to the weapon system/equipment.

a. Introduction work package.

b. Troubleshooting symptom index work package.

c. Troubleshooting testing work package.

Source: https://assist.dla.mil -- Downloaded: 2016-12-09T23:59Z
Check the source to verify that this is the current version before use.

d. Troubleshooting procedures work package.

4.8.6 Maintenance instructions. Maintenance instruction data is divided into the following specific work packages, as applicable to the weapon system/equipment.

a. Service upon receipt work package.

b. Equipment/user fitting instructions work package.

c. PMCS work package.

d. Preventive maintenance inspections work package (aircraft only).

e. Aircraft lubrication instructions work package.

f. Ammunition maintenance work package.

g. Auxiliary equipment maintenance work package.

h. Task oriented maintenance work packages.

Author's Note: These task oriented maintenance work packages contain all authorized maintenance tasks, such as remove, inspect, service, test , install, replace, disassemble, assemble, repair, clean, adjust align, etc. for the overall weapon system/equipment and each maintainable subsystem, assembly, and component.

i. Phased maintenance inspection work package.

j. Preventive maintenance services inspection work package.

4.8.7 Repair parts and special tools lists. Repair parts and special tools lists data is divided into the following specific work packages, as applicable.

a. Introduction work package.

b. Repair parts list work package.

c. Special tools list work package.

d. Cross-reference index work packages.

4.8.8 Supporting information. Supporting information data is divided into the following specific work packages, as applicable to the weapon system/equipment.

Author's Note: The supporting information work packages listed below were formerly referred to as appendixes, however, with the creation of the work package concept, it is no longer necessary to title this information as appendixes.

a. References work package.

b. Maintenance allocation chart (MAC) work package.

Source: https://assist.dla.mil -- Downloaded: 2016-12-09T23:59Z
Check the source to verify that this is the current version before use.

c. RPSTL work package.

d. Components of end item (COEI) and basic issue items (BII) lists work package.

e. Additional authorization list (AAL) work package.

f. Expendable and durable items list work package.

g. Stowage and decal/data plate guide work package.

h. On-vehicle equipment loading plan work package.

i. Tool identification list work package.

j. Illustrated list of manufactured items work package.

k. Torque limits work package.

l. Mandatory replacement parts work package.

m. Ammunition marking information work package.

n. Foreign ammunition (NATO) work package.

o. Aircraft inventory master guide work package.

p. Storage of aircraft work package.

q. Weighing and loading work package (aircraft only).

r. Depot mobilization requirements work package.

s. Component checklist work package.

t. QA requirements work package.

u. Wiring diagrams work package.

v. Additional work packages.

Author's Note: Necessary supporting data for a specific weapon system, equipment, or component, that does not fall under the supporting information categories listed above, may be placed into as many additional work packages as required. These work packages should follow the last required work package of those listed in a. through t, above, and the wiring diagrams work package (if applicable) should then follow the last additional work package.

4.9. How to develop a work package TM. The following general process should be followed when acquiring weapon system/equipment work package TMs.

a. Review contractual requirements and the filled-out TM content selection matrixes supplied with the contract. (Refer to figure 3.)

Source: https://assist.dla.mil -- Downloaded: 2016-12-09T23:59Z
Check the source to verify that this is the current version before use.

b. Develop a detailed TM outline, for each TM, using the filled-out TM content selection matrixes as a guide.

c. Access or obtain the required modular DTDs. Refer to MIL- STD-2361.

d. Develop an SGML tagged source file for each WP.

e. Assemble individual WPs into specific TMs in accordance with TM content selection matrixes, using the assembly DTD. Refer to MIL- STD-2361.

4.9.1 How to develop work packages. The proponent activity must apply the requirement of weapon systems, equipment or component engineering design to the development of the technical manuals. The acquiring activity together with the proponent activity should provide the TM developer with the filled-in TM content selection matrixes provided in MIL-STD-40051. Based on these content selection matrixes, it is suggested that TM outlines be developed reflecting the arrangement and alignment of the required technical information into the required chapters and work packages. The guidelines set forth in the approved LSA or maintenance plan dictates the technical content of the WP manuals.

4.9.1.1 Development of individual work packages. Ideally, each WP in a manual will be an independent, stand alone data unit. The author will be required to group some information or maintenance tasks in one work package and divide others into several WPs of suitable length. Division or selection of coverage will depend on various factors. These factors may include but are not limited to:

a. A specific work package that is required by MIL-STD-40051.

b. A specific work package that is required by the TM content selection matrix provided by the contract activity.

Author's Note: An "R" included for a specific WP requirement contained in the TM content selection matrix denotes that a WP is mandatory and must be included in the TM.

c. A WP may be determined by the operational modes, complexity of the maintenance action, or level(s) of maintenance covered.

Author's Note: Separate maintenance WPs may be developed for the same equipment or component for different maintenance levels (e.g., a WP for operator's maintenance and a WP for direct support maintenance for the same item of equipment).

d. Two or more WPs for an identical maintenance task may be required because the task is performed differently due to differences in configurations.

e. More than one WP may be required because the size of the work package will exceed 30 pages.

Author's Note: It is permissible to divide a set of maintenance tasks for a specific system, equipment or component into two or more WPs to comply with the page size limitation. (e.g., removal and installation procedures could be placed in one WP and disassembly, cleaning, repair, and reassembly could be placed in a second WP).

f. Development of more than one WP because the reduction in the size of the work package would make it more useable.

Source: https://assist.dla.mil -- Downloaded: 2016-12-09T23:59Z
Check the source to verify that this is the current version before use.

g. Confining the information to one WP because dividing the information into several work packages would degrade the useability.

Author's Note: Splitting a disassembly procedure into two separate WPs would degrade the useability of the maintenance procedure.

h. Separate WPs due to different initial setup information for a set of maintenance tasks for a repairable component.

Author's Note: If the support equipment, tools, materials and personnel used to perform removal and installation is very different than the support equipment, tools, materials and personnel used to perform disassembly and reassembly for the same system or component, it may be better to separate this information into two WPs.

4.9.2 Creating an outline for a TM. An outline for a -14, Operator's, Organizational, Direct Support, and General Support Maintenance Including RPSTL TM for a "typical" Van Semitrailer may look similar to the sample outline provided below.

Front Cover
Warning Summary
Title Block Page
Table of Contents
How to Use This Manual

Author's Note: Chapters must be arranged in the following order, however, based on the complexity of the weapon system/equipment, more than one chapter may be created for a specific functional area (e.g., maintenance of an aircraft's electrical systems, fuel system, flight control system may be placed in separate chapters or all maintenance at all maintenance levels for a rifle may be placed in one combined Chapter).

Chapter 1. Introductory Information with Theory of Operation

Work Packages

0001 00	Semitrailer General Information
0002 00	Semitrailer Equipment Description and Data
0003 00	Air Over Hydraulic Brake System Theory of Operation
0004 00	Electrical System Theory of Operation
0005 00	Repair Parts; Special Tools; Test Measurement and Diagnostic Equipment (TMDE); and Support Equipment

Chapter 2. Operator Instructions

Work Packages

0006 00	Semitrailer Description and Use of Operator Controls and Indicators
0007 00	Semitrailer Operation Under Usual Conditions
0008 00	Semitrailer Operation Under Unusual Conditions

Source: https://assist.dla.mil -- Downloaded: 2016-12-09T23:59Z
Check the source to verify that this is the current version before use.

Chapter 3. Operator Troubleshooting Procedures

Work Packages

0009 00	Introduction
0010 00	Symptom Index
0011 00	Operator Troubleshooting

Chapter 4. Unit Troubleshooting Procedures

Work Packages

0012 00	Introduction
0013 00	Symptom Index
0014 00	Air Over Hydraulic Brake System Troubleshooting
0015 00	24-Volt Electrical System Troubleshooting
0016 00	110-Volt Electrical System Troubleshooting

Chapter 5. Operator Maintenance Instructions

Work Packages

0017 00	Operator/Crew PMCS
0018 00	Electrical Connectors Maintenance
0019 00	Couplings Maintenance
0020 00	Air Reservoir Maintenance
0021 00	Tire and Wheel Assembly Maintenance

Chapter 6. Unit Maintenance Instructions

Work Packages

0022 00	Semitrailer Service Upon Receipt
0023 00	Organizational PMCS
0024 00	Semitrailer General Maintenance Procedures
0025 00	Semitrailer Lubrication Procedures
0026 00	Electrical System Maintenance
0027 00	Body Maintenance
0028 00-0034 00	Additional Maintenance WPs

Chapter 7. Direct Support and General Support Maintenance - Electrical Systems

Work Packages

0035 00	110-Volt Connector Receptacle Repair
0036 00	24-Volt Connector Receptacle Repair
0037 00	24-Volt Domelights Wire Harness Repair
0038 00	Wall Receptacle Cables Repair

Source: https://assist.dla.mil -- Downloaded: 2016-12-09T23:59Z
Check the source to verify that this is the current version before use.

Chapter 8. Direct Support and General Support Maintenance - Semitrailer Body

Work Packages

0039 00	Side Door and Right Rear Door Repair
0040 00	Deck Repair
0041 00	Semitrailer Body Repair

Chapters 9-12. Additional Semitrailer Systems Direct Support and General Support Maintenance Chapters

Chapter 13. Supporting Information

Work Packages

0101 00	References
0102 00	MAC Chart
0103 00	RPSTL
0104 00	COEI/BII Lists
0105 00	AAL List
0106 00	Expendable and Durable Items List
0107 00-0112 00	Additional Supporting Information WPs

Index
DA Form 2028
Authentication Page
Back Cover

4.9.3 Development of a SGML source file. Once an outline is prepared and all the work packages have been identified, a SGML source file (document instance) should be developed for each WP. (Refer to figure 4.) The SGML tagged source file is composed of SGML coded ASCII, marked up (tagged) in accordance with the applicable modular DTD. In order to tag WP text appropriately, the author inserting the tags must be familiar with the DTD or must provide the text file to a person who is experienced with the DTD and who understands the type of documentation being written, especially when content tags are used. A customized template modeled for the applicable DTD may be available or developed to assist the author in creating the document instance.

Author's Note: A template can be implemented in a text editor, a WYSIWYG editor, a data base input form, or a SGML authoring/composition system.

4.9.3.1 Work package identification numbers. For data base retrieval purposes, a unique number will be assigned to the source file for each WP. The WP identification number will not be changed throughout the life of the WP. These numbers will be assigned by the acquiring activity in accordance with the requirements contained in MIL-STD-40051. Refer to figure 4 for an example of WP identification number inclusion in a source file.

4.9.4 Printing the TM using the FOSI. The FOSI specifies the desired appearance of the information content of the document instances. Document formatting requirements such as page layout and hyphenation rules are specified in the FOSI, as well as how document elements such as paragraph titles, tables, and lists are to be formatted. The FOSI provides the composition and imaging characteristics to be

Source: https://assist.dla.mil -- Downloaded: 2016-12-09T23:59Z
Check the source to verify that this is the current version before use.

applied to the SGML tagging (including attributes) of a SGML tagged text source file (document instance) to present the text material in paginated or screen presentation form. The use of a FOSI is not mandatory.

4.9.5 Printing the TM using a style sheet. A style sheet may be used in lieu of a FOSI to specify the desired appearance of the information content of the document instance. The style sheet provides the same formatting requirements to an authoring/composition system as does a FOSI.

5. FORMAT AND GENERAL WRITING STYLE.

5.1 General. The format and writing style guidance contained in this section has been included to expand, emphasize, and clarify the requirements provided in MIL-STD-40051. To avoid unnecessary repetition and to provide the user of this handbook with a more useable document, requirements contained in MIL-STD-40051 that are self explanatory or can only be interpreted in one way have been omitted from this handbook.

5.2 Format.

5.2.1 Major divisions. The hierarchical breakdown of a TM is: volumes (if required), chapters, and work packages (WP). Each division used should have at least two occurrences (for example where there is a Volume 1, there should be a Volume 2; where there is a Chapter 1, there should be a Chapter 2; etc.). Multiple volumes should be partitioned only between chapters.

5.2.2 Work packages.

a. Work packages (WP) are used to logically divide all data required for a certain function (i.e., descriptive information, operator's instructions, maintenance, troubleshooting, repair parts, supporting information, etc.). Procedural maintenance tasks or descriptive information contained in a WP consist of a series of paragraphs and procedural steps. When it is necessary to divide a maintenance task into subtasks, for clarity, subparagraph titles may be used. Refer to paragraph 5.2.3. The words "END OF TASK" are placed below the last data item (i.e., text, illustration, etc.) in any WP containing procedural tasks.

5.2.3 Paragraphs.

a. Paragraphs contained within a WP are not numbered.

b. Paragraphs and subparagraphs within a work package may have titles. If titled, the title should begin at the left margin. A first level paragraph title is in all capital letters. Lower level paragraph titles have the first letter of the first word and of each principle word capitalized.

c. When titled paragraphs are continued on subsequent pages, the first level paragraph title is placed at the top of those pages (e.g., **REMOVAL - Continued**).

d. All titles are in boldface type. Paragraph text begins flush left and stand alone.

e. Text following paragraph titles stands alone (i.e., text will not run-in with the title). Text begins flush left, on the second line following the paragraph title.

5.2.4 Procedural steps. Procedural steps present detailed, step-by-step instructions for performing an operational or maintenance task - such as turning on a test set; changing oil; replacing a part; repairing an assembly; or inspecting, cleaning, or removing an item of equipment, etc. Procedural steps are presented in

Source: https://assist.dla.mil -- Downloaded: 2016-12-09T23:59Z
Check the source to verify that this is the current version before use.

a logical sequence and reflect the sequence in which the tasks are actually performed. Procedural steps and substeps are numbered consecutively with Arabic numerals or lower case letters. Procedural steps are placed immediately after paragraph or subparagrph titles, or, if applicable, after a small paragraph that introduces the procedural steps.

Author's Note: The following demonstrates, by example, how procedural steps are placed after a paragraph title or subparagraph title.

EXAMPLE 1

REMOVAL ***(Example of a paragraph title)***

There are two gunner-plug eyecups. One is on the commander's relay assembly and one is on the ISU. Both are replaced the same way. The ISU gunner-plug eyecup is illustrated below.

1. Remove gunner-plug eyecup (1) from eyepiece assembly (3).

2. Remove screw (4), screw sleeve (5), washer (6), and gunner-plug eyecup (1) from ISU (2).

OR

REMOVAL

1. Move SENSOR SELECT knob (5) to NEUTRAL.

2. Loosen two setscrews (7).

3. Remove SENSOR SELECT knob (5) from SENSOR SELECT shaft (6).

EXAMPLE 2

REMOVAL

There are two gunner-plug eyecups. One is on the commander's relay assembly and one is on the ISU.

Commander's Relay Assembly Gunner-Plug Eyecup. ***(Example of a subparagraph title)***

1. Remove gunner-plug eyecup (1) from eyepiece assembly (3).

2. Remove screw (4), screw sleeve (5), washer (6), and gunner-plug eyecup (1) from the commander's relay assembly (2).

ISU Gunner-Plug Eyecup.

1. Remove gunner-plug eyecup (1) from eyepiece assembly (3).

2. Remove screw (4), screw sleeve (5), washer (6), and gunner-plug eyecup (1) from ISU relay assembly (2).

5.2.4.1 Procedural step levels. Procedural steps may be, when required, divided into no more than six levels.

Source: https://assist.dla.mil -- Downloaded: 2016-12-09T23:59Z
Check the source to verify that this is the current version before use.

Author's Note: The following demonstrates, by example, how procedural steps and substeps levels are formatted and numbered.

EXAMPLE

1. Primary procedural step number (1, 2, 3, etc.) are flush left. Text begins two spaces after the period following the numeral. The text is blocked.

   a. The first-level procedural substep step letters, (a, b, c, etc.), are immediately below the text of the first-level procedural steps. Titles are not allowed. The text is blocked.

      (1) The second-level procedural substep step numbers, ((1), (2), (3), etc.), are immediately below the text of first-level procedural substeps. Titles are not allowed. The text is blocked.

         (a) The third-level procedural substep step letters, ((a), (b), (c), etc.), are immediately below the text of second-level procedural substeps. Titles are not allowed. The text is blocked.

            1 The fourth-level procedural substep step numbers, (1, 2, 3, etc.), are immediately below the text of third-level procedural substeps. Titles are not allowed. The text is blocked.

               a The fifth-level procedural substep step letters, (a, b, c, etc.), are immediately below the text of fourth-level procedural substeps. Titles are not allowed. The text is blocked.

Author's Note: If additional substep letters are required, use aa, ab, etc. after z, or (aa), (ab), etc. after (z), or aa, ab, etc. after z.

5.2.5 Tables and lists.

5.2.5.1 Table locations.

a. Tables are inserted in the TM on the same page or as soon after the first reference in the text as possible.

b. Full-page tables using a horizontal (landscape) format are positioned so that the page must be rotated 90 degrees clockwise to be read. The table number and title are placed at the bottom of the page as it exists before rotation.

5.2.5.2 Table numbering. Tables are numbered consecutively within each WP in the order of their reference starting with Arabic number 1. If only one table is referenced in a WP, it is numbered.

5.2.5.3 Table titles. Each table has a title. The titles identify the contents or purpose of the table and distinguish that table from others in the TM.

a. The table title consists of the word "Table" followed by the table number, a period, two spaces, and the title. A period follows the last word of the title. Capitalize the first letter of the first and each major word of the title. Table titles are in boldface type.

Source: https://assist.dla.mil -- Downloaded: 2016-12-09T23:59Z
Check the source to verify that this is the current version before use.

b. Center table titles above the table. If the title is too long to fit on one line, align the second line with the first letter of the title.

c. Identify tables applicable to one Service only in a joint service TM. (For example, **Table 3. Fuel Indicator Correction Factors (Army Only).**)

d. Identify tables applicable to more than one service in a joint service TM. (For example, **Table 1. UHF Radio Controls (Army and Navy Only).**)

e. When a table is continued on more than one page, the table number and title is repeated followed by a dash and the word " Continued" . The closing rule is omitted at the foot of a continued table; the opening rule is continued at the head of the continued portion along with the heading title data.

5.2.5.4 Table format. Certain required tables in MIL-STD-40051 are referred to as "standard tables". Tables designated as standard have no deviations to the number of columns and the titles in the column headings. The format and table headings are automatically generated by the applicable modular DTD and FOSI used for the functional information. The following applies to all non-standard tables developed for a TM.

a. Place a horizontal rule at the beginning (head) and at the end (foot) of a table. Title columns appropriately in boldface, uppercase letters. Place a horizontal rule under the column titles. All tables have outside vertical rules and, if required for clarity, vertical rules between columns.

b. Design tables so that related entries in different columns are aligned.

c. Align data within one column of a table by one method only, i.e., left justified, left justified with substeps indented, centered, etc. However, different columns within the same table may be presented differently, i.e., one column may have the data left justified while another column may have the data centered.

d. Tables may contain procedural steps and substeps, with a maximum of four levels (i.e., (a), (b), etc.). Number steps in accordance with 5.2.4.1. When space allows, indent the substeps two spaces.

e. Illustrations may be included within a table, if necessary.

5.2.5.5 Footnotes to tables.

a. Unless numbers would cause confusion, use consecutive superior numbers beginning with 1 for numbering footnotes to tables. (Refer to figure 5.) The numbering system is by table. Superior lowercase letters, asterisks, or other designations may be used where numbers would cause confusion. Place footnote references at the right of letters, words, or symbols, and at the left of numbers (also at the left of such words as "None" in columns with numbers). Number references to footnotes across the page from left to right. Separate two or more footnote references occurring together by spaces, not commas,

b. Place footnotes to tables below the closing line of the applicable table unless the table is continued. (Refer to figure 5.) If the table is continued on other pages, place all footnotes at the bottom of the page on which they are referenced.

c. For footnotes coming before the end of the table, place a one-inch horizontal rule flush left two line spaces below the table and place the footnote under the rule. Start footnotes at the end of the table on the second line below the closing rule.

Source: https://assist.dla.mil -- Downloaded: 2016-12-09T23:59Z
Check the source to verify that this is the current version before use.

d. Indent all footnotes five spaces from the left margin of the table and return carryover lines to the left margin of the table. Separate footnote numbers or other designators from the footnote text by two spaces. (Refer to figure 5.)

5.2.5.6 Table readability and use.

a. There is clear space between columns. Row entries in tables may also be arranged in groups separated with clear space.

b. Entries are aligned within columns as follows:

(1) For decimal data, decimal points are aligned.

(2) For scientific notation, multiplication signs are aligned.

(3) All other numeric data are aligned flush right.

(4) Alphabetic or alphanumeric data may be aligned flush left, flush right, or centered. Data may also be indented.

c. Units of measure are identified in appropriate row entries or as separate column headings.

d. The user will not be required to interpolate (estimate between tabled values). Avoid interpolation by expanding the table or by presenting the data in a graph.

5.2.5.7 Tabular information. Small amounts of tabular information may be prepared in a two-column format without identifying it as a table. Each column may have a header. Capitalize the first letter of the first and each major word of the header. The headers are in boldface type and underlined.

5.2.5.8 Lists. Lists may be used in lieu of tables, when appropriate. Three types of lists are identified below. Lists may be unnumbered, numbered sequentially, or lettered alphabetically. They may have an optional title in all uppercase bold letters. (Refer to figure 6.)

a. Definition list. The definition list consists of the term and the definition. It may have the headers, "**Term**" and **Definition**" above the appropriate sections of the list. Refer to MIL-STD-2361 or MIL-PRF-28001 for more information on the development of lists.

b. Random list. The random list consists of one or more items in a random order.

c. Sequential list. The sequential list consists of one or more items in a specified order, such as alphabetic, numeric, or alphanumeric.

5.2.6 Figures/illustrations.

5.2.6.1 Figure numbering. DMWRs and RPSTLs require the use of figure numbers. For all other TMs, figure numbers are only required for foldout type illustrations because they are always located at the rear of the TM and not within the WP where they are used. When figure numbers are used, figures are numbered in consecutive ascending numerical sequence within each WP, beginning with the Arabic numeral 1. Figures are numbered in the order of reference in the text.

Source: https://assist.dla.mil -- Downloaded: 2016-12-09T23:59Z
Check the source to verify that this is the current version before use.

5.2.6.2 Figure number and title placement. When used, titles and numbers for figures are part of the illustrations and not a part of the textual material. Figure numbers for DMWRs, RPSTLs, and foldout figures are placed on the graphic and become a part of the graphic. When inserting a figure into a TM in the horizontal (landscape) position, the page must be rotated 90 degrees clockwise to be read. Make certain that the figure number and title (which is part of the graphic) is located at the bottom of the graphic as it exists before rotation. (Refer to figure 7.)

5.2.6.3 RPSTL figure numbering. RPSTL TM figures and figures in RPSTL supporting information WPs are sequentially numbered within a RPSTL chapter (not within each WP), using Arabic numerals beginning with 1.

5.2.6.4 Figure titles.

a. When titles are used for figures, "Figure" is in upper- and lowercase, followed by the figure number, a period, two spaces, and the title. Capitalize the first letter of the first and each major word of the title. Follow the last word of the title with a period. Center figure titles on the graphic image area below the graphic and begin the title on the same line with the figure number.

b. If the title of the figure is too long to fit on one line, align the second line with the first letter of the title.

c. Identify illustrations applicable to one Service in a joint service TM. (For example, **Figure 3. Fuel Indicator (Army Only).**)

d. Identify illustrations applicable to more than one Service in a joint service TM. (For example, **Figure 3. Fuel Indicator (Army and Air Force Only).**)

5.2.6.5 Legends. Legends are part of figures and not part of the text.

5.2.7 Warnings, cautions, and notes. Warnings and cautions, are short, concise, and used only to highlight operating or maintenance procedures, practices, conditions, or statements which are considered essential to protect personnel (Warnings), or equipment (Cautions). Notes are used to highlight procedures, practices, conditions, or statements which are not considered essential to protect personnel. Warnings cautions, and notes do not contain procedural steps.

5.2.7.1 Format for warnings, cautions, and notes.

a. Standard warnings and cautions consist of four parts: a heading (WARNING, CAUTION), a statement of the hazard or precaution, minimum precautions to be taken, and a possible result if the warning or caution is disregarded. Warnings and cautions immediately precede the text to which they apply. Notes precede or follow applicable text, depending upon the material to be highlighted. When warnings, cautions, and notes occur for the same text, warnings will appear first, cautions second, and notes last.

b. The header **WARNING, CAUTION,** or **NOTE** is bold and centered above the appropriate text. Headers are not numbered. When a warning, caution, or note consists of two or more paragraphs, the header **WARNING, CAUTION,** or **NOTE** is not repeated above each paragraph. Warning, cautions, and notes on unrelated topics may not be contained under one heading.

Source: https://assist.dla.mil -- Downloaded: 2016-12-09T23:59Z
Check the source to verify that this is the current version before use.

c. The icons provided in figure 8 can be used in conjunction with the **WARNING** or **CAUTION** header. Figure 9 provides an example of the addition of an icon to a safety warning for quick recognition of the hazard by the user. Icons used throughout the manual should also be included in the warning summary at the beginning of the manual along with their definitions. (Refer to figure 10.)

d. A general description of the warnings should be included in the warning summary provided in the front of the TM. (Refer to figure 10.)

Author's Note: The warning summary is not be a word-for-word repetition of all the warnings in the TM and should be limited to alerting the user of the different types of hazards, in general terms, that will be encountered in operating and maintaining the weapon system or equipment covered within the TM.

e. Indent all lines of warnings, cautions, or notes five spaces or characters from both left and right margins.

f. Bulleted lists are not allowed in warnings, cautions, or notes.

g. Warnings, cautions, or notes are not divided so that first lines or groups of icons appear on one page and remaining lines or group of icons appear on another page. Warnings, cautions, and notes are not separated from the text to which they apply.

5.2.8 Hazardous materials warnings with icons. Procedures prescribed for the operation and maintenance of equipment are consistent with the safety standards established by the Occupational Safety and Health Act (OSHA) Public Law 91-596 and Executive Order 12196. When exposure to hazardous chemicals or other adverse healths factors or use of equipment cannot be eliminated, guidance pertaining to the exposure is included in the TM. A list of personnel protective devices should also be included. Hazardous materials warnings may be presented in the standard warning format without an icon (as described above in 5.2.7.1a and b, or in conjunction with an icon, or a combination of icons. The acquiring activity must approve the use of icons other than those presented in figure 11 of this handbook. Hazards that result from a combination of materials must clearly be identified to indicate that mixing or combining the materials creates the hazard.

5.2.8.1 Format for hazardous materials warnings with icons. Hazardous materials warnings with icons consist of a heading (WARNING), the icon(s), and a full description of the hazardous material and the precautions to be taken. They immediately precede the text to which they apply. For commonly used substances only (e.g. dry cleaning solvent, hydraulic fluids, paints, etc.), an abbreviated format may be used for hazardous materials warnings. The abbreviated format consists of the heading (WARNING), the icon(s), and the nomenclature (signal word(s)) of the hazardous material. In this case the full description of the warning is placed in the warning summary at the front of the TM. (Refer to figure 9.) Icons may be used in technical manuals warnings either singly or in combination. When icons are used in combination, the placement and format should adhere to the methods provided in figure 9. Figure 11 also includes all approved single hazard icons; additional icons and definitions will be added, as applicable, when this document is amended or revised.

5.2.8.2 Development of icons. (Refer to figure 11.) Icons are enclosed in a square or rectangular box. The signal word(s) for icons appear outside the box placed to the right or below the icon(s). Type size for signal word(s) should be no smaller than 10-point; 12-point boldface type is recommended.

Source: https://assist.dla.mil -- Downloaded: 2016-12-09T23:59Z
Check the source to verify that this is the current version before use.

5.2.9 Page sizes.

a. Table I lists approved TM page sizes. The maximum printing area includes all printed matter on the page (e.g., text, illustrations, revision bars, TM numbers, page numbers, etc.).

b. With the exception of RPSTLs supporting nuclear weapons (regulated by Department of Energy/Defense Nuclear Agency), RPSTL TMs and RPSTL supporting information WPs are prepared in a vertical format.

c. Table II lists manual trim sizes, foldout maximum page trim sizes, and foldout maximum printing area for foldout pages. The minimum margin is 1/2 inch top and bottom and 1/2 inch on the side opposite the binding edge. Foldouts will only appear in 8-1/2 by 11 and 11 by 8-1/2 inch size manuals.

TABLE I. TM page sizes (in inches).

Style	Trim Size	Format	Maximum Printing Area
Standard	8-1/2 x 11 11 x 8-1/2	Vertical Horizontal	7 x 10 10 x 7
Pocket	4 x 5-1/2 5-1/2 x 4	Vertical Horizontal	3-1/8 x 5 5 x 3-1/8
Logbook	6-1/2 x 9-1/2 9-1/2 x 6-1/2	Vertical Horizontal	5-1/2 x 8-1/2 8-1/2 x 5-1/2
Double	17 x 11	Horizontal Only	15 -3/4 x 9

TABLE II. Foldout page sizes (in inches).

Manual Trim Size	Foldout Maximum Page Trim Size (Including Apron)	Foldout Maximum Printing Area
8-1/2 X 11	42-1/2 X 11	36 X 10
11 X 8-1/2	11 X 42-1/2	10 X 36

5.2.10 Type sizes and styles. Table III lists preferred type sizes and styles. All type sizes may be plus or minus one point. Slight variations in spacing and leading are permitted. Except for pocket size TMs which may use 6 point type size, 8 point is the smallest permissible type size.

Source: https://assist.dla.mil -- Downloaded: 2016-12-09T23:59Z
Check the source to verify that this is the current version before use.

TABLE III. Style, capitalization, leading, and spacing.

Use	Preferred Font Type/Size	Capitalization	Leading	Vertical Spacing
Cover: Security Classification	Sans serif bold 24	Uppercase		
Cover: TM Number	Sans serif bold 24	Uppercase		
Cover: Words "Technical Manual"	Sans serif bold 14	Uppercase		
Cover: Type of Publication	Sans serif bold 14	Uppercase		
Cover: Maintenance Levels	Sans serif bold 14	Uppercase		
Cover: Nomenclature of Equipment	Sans serif bold 18 - 24	Uppercase		
Cover: Type, Model, Part Number, National Stock Number, EIC, or Subject	Sans serif bold 18 - 24	Uppercase		
Cover: Subtitle (Volume Title and Number)	Sans serif bold 14	Uppercase		
Cover: Availability Statement, Supersession Notice, Disclosure Notice, Distribution Statement, Export Control Notice, Destruction Notice	Sans serif bold 8 for header and sans serif 8 for text	Uppercase for header and upper- and lower- case for text		
Cover: Service Nomenclature	Sans serif bold 18	Uppercase		
Cover: Change Number and Date	Sans serif bold 14	Uppercase		
Cover: TM Date	Sans serif bold 18	Uppercase		
Front/Back Matter Headers: Warning Summary, Table of Contents, How to Use This Manual, Index, and Glossary Headers	14 Sans serif bold	Uppercase	6	48 points below TM number; 18 points above text, maintenance task, procedural, or paragraph headers, table, or illustration; 12 points above warning, caution, and note headers

Source: https://assist.dla.mil -- Downloaded: 2016-12-09T23:59Z
Check the source to verify that this is the current version before use.

TABLE III. Style, capitalization, leading, and spacing - Continued.

Use	Preferred Font Type/Size	Capitalization	Leading	Vertical Spacing
Change Sheet	Sans serif 10 (See change requirements for bolds)	Upper- and lowercase	1	
Title Block Page	Sans serif 10 (See cover requirements for bolds)	Upper- and lowercase		
TM Number	Sans serif bold 10	Uppercase		30 points from top of page
Page Number	Sans serif bold 10			30 points from bottom of page
Change Number	Sans serif bold 10	Uppercase for first letter of "Change"		30 points from bottom of page
Security Classification	Sans serif bold 14	Uppercase		*30 points from top and bottom of page
Deleted Page Notation	Serif bold 8	Upper- and lowercase	2	30 points from top or bottom of page
Chapter Number and Header	Sans Serif Bold 14	Uppercase	6	Centered left to right and top to bottom on page; 18 points between chapter number and header
Work Package Title Horizontal Rules				Top rule 18 points below TM No.; bottom rule 18 points above headers, text, table, or illustration
Work Package Unique Number and Header	Sans serif bold 10	Uppercase	2	8 points below top WP title horizontal rule and 8 points above bottom rule
Scope of Task Title	Sans serif bold 10	Uppercase	2	18 points below WP bottom rule
Scope of Task Bottom Horizontal Rule				18 points below scope of task text
Initial Setup Title	Sans serif bold 10	Uppercase	2	18 points below scope of task bottom rule
Initial Setup Bottom Horizontal Rule				18 points below initial setup text

Source: https://assist.dla.mil -- Downloaded: 2016-12-09T23:59Z
Check the source to verify that this is the current version before use.

TABLE III. Style, capitalization, leading, and spacing - Continued.

Use	Preferred Font Type/Size	Capitalization	Leading	Vertical Spacing
Maintenance Task Titles and Narrative Text Titles (same level as maintenance task titles)	Sans serif bold 10	Uppercase	2	18 points below TM number, front/back matter header, WP or initial setup horizontal bottom rule; 12 points above/below text, table, or illustration,; 12 points above/below warning, caution, and note headers/text
Procedural Text Titles or Paragraph Titles	Sans serif bold 10	All uppercase or uppercase for first letter of each principal word (depending upon emphasis)	2	18 points below TM number, front/back matter header, WP or initial setup horizontal bottom rule, maintenance task or narrative text title; 12 points above/below text table, or illustrations; 12 points above/below warning, caution, and note headers/text
Text	Serif 10	Upper- and lowercase	1	18 points below TM number, WP or other header; 12 points above/below table or illustration; 6 points above page no.; 6 points above/below warning, caution, and note headers
Emphasis	Italic bold 10	Upper- and lowercase	1	
Formulas and Equations	Italic 10	Upper- and lowercase	1	12 points above/below text, table, or illustration
Figure Number and Title	Serif or italic 10	Uppercase for first letter of each principal word	2	18 points below illustration (within the figure area)
Legend on Illustrations	Sans serif 8	Uppercase for first letter of first word	1	As required
Illustration Callouts	Sans serif 8	Uppercase		As required

Source: https://assist.dla.mil -- Downloaded: 2016-12-09T23:59Z
Check the source to verify that this is the current version before use.

TABLE III. Style, capitalization, leading, and spacing - Continued.

Use	Preferred Font Type/Size	Capitalization	Leading	Vertical Spacing
Footnotes	Serif 8	Upper- and lowercase	1	18 points below text or table
Warnings, Cautions, and Notes Headers	Sans serif extra bold 12	Uppercase		12 points below text and 6 points above text
Illustration Captions (titles)	Sans serif bold 10	Uppercase	2	18 points below illustration
Table Number and Title	Serif or italic bold 10	Uppercase for first letter of each principal word	2	6 points above title
Column Headers	Serif bold 10	Uppercase	1	
Table Text	Serif 10	Upper- and lowercase	2	
List Headers	Sans serif bold 10	Uppercase for first letter of each principal word	2	12 points above list
Footnotes	Serif 8	Upper- and lowercase	1	18 points below text or table
Warnings, Cautions, and Notes Headers	Sans serif extra bold 12	Uppercase		12 points below text and 6 points above text
RPSTL Parts List, Special Tools List, and Cross-Reference Indexes (National Stock Number Index WP, Part Number Index WP, and Reference Designator Index WP) Column Headers	Sans serif bold 8- 10	Uppercase	1	
RPSTL Text	Sans serif 8 - 10	Upper- and lowercase	1	
Rules	3/4 of a point (0.010)	Upper- and lowercase	1	

*NOTE: When a TM is classified, the TM number is 48 points from the top of the page and the page number 48 points from the bottom of the page. All other spacing is adjusted accordingly.

Source: https://assist.dla.mil -- Downloaded: 2016-12-09T23:59Z
Check the source to verify that this is the current version before use.

5.2.11 Placement of text and illustrations.

5.2.11.1 Text formatting requirements.

a. Preferred text format for 8-1/2 by 11-inch manuals is single column (page wide), although double column can be used. Both single and double column formatted WPs can be included in a single TM if it would make the data more readable, or comprehensible, however, both formats should not be used in the same chapter.. Text is single spaced (double spaces between procedural steps).

b. The first line of a paragraph should not be located at the bottom of the page or column. The last line of a paragraph should not be placed at the top of a new page. Do not place the title or header on the last line of a page or column. Widows and orphans are not allowed.

5.2.11.2 Placement of text and related illustrations.

a. Do not place procedural steps in illustrations.

b. Place text and illustrations in such a manner that will conserve space without crowding or degrading the usability or clarity of the material. Avoid blank spaces whenever possible. Whenever possible, place illustrations on the same or facing page of associated text. If this is not possible (for example, more than one full-page illustration), place the illustration as close to the related text as possible.

5.2.11.2.1 Placement of text and related illustrations for pocket TMs. Place text for pocket-size manuals on the right-hand pages with supporting illustration on the facing left-hand pages.

5.2.11.3 Text wrapping. Always position text within the required image area: Do not wrap text around illustrations. (Refer to figure 12.)

5.2.11.4 Illustration placement options. Illustrations are placed either immediately above or below the supporting text or the procedural step or group of steps. Illustrations may float on a page to reduce the white space on a page. If there is not enough room on a page to place a supporting illustration, place the illustration on a facing page , if possible.

Author's Note: When developing an SGML document instance, use the following words to indicate placement options for digital illustrations: "Above", "Below", "Immediate (default)", "Facing", and "Float". Tag the appropriate position in the text with the correct option. (Refer to figure 13.)

a. Use the "Above" reference to place the illustration above the referenced text or steps.

b. Use the "Below" reference to place the illustration below the referenced text or steps.

c. Use the "Intermediate (default)" reference to place the illustration immediately below the referenced text or steps.

Source: https://assist.dla.mil -- Downloaded: 2016-12-09T23:59Z
Check the source to verify that this is the current version before use.

d. Use the "Facing" reference to place the illustration on the page facing the referenced text or steps.

e. Use the "Float" reference to place the illustration anywhere on the page with the referenced text or steps.

For additional information on the methods used to indicate how to place illustrations in a document instance, refer to MIL-STD-2361.

5.2.11.5 Multiple tasks using same illustrations. When two separate tasks appear on the same page one illustration can be used to support both tasks if space permits.

5.2.11.6 Repeating illustrations. Illustrations are not repeated unless necessary to support multipage descriptions of tasks or to support a different requirement in another part of the TM.

5.3 Style.

5.3.1 Abbreviations and acronyms.

a. At the first use of abbreviations and acronyms, spell out words completely and place the abbreviation or acronym in parentheses immediately after the word(s). When a phrase is abbreviated as an acronym, capitalize the first letter of each word and do not separate letters in the acronym by periods (for example, "Repair Parts and Special Tools List (RPSTL)"). Abbreviations and acronyms accepted as words, such as radar, sonar, laser, etc., need not be spelled out.

b. Do not create new abbreviations or acronyms to duplicate those presently listed in MIL-STD-12. Abbreviations and acronyms may be plural or possessive.

c. Define all nonstandard abbreviations and acronyms (except acronyms for Electrostatic Discharge (ESD) and Hardness-Critical Processes (HCP)) in the "list of abbreviations/acronyms" paragraph of the general information WP.

d. Spell out abbreviations and acronyms used in tables, but not found in the text or other portion of the TM, in a footnote to the applicable table. Spell out abbreviations and acronyms used in illustrations or figures, but not found in the text or other portion of the TM, in a note on the applicable illustration or figure.

e. When abbreviations or acronyms are used as markings on equipment (placarding), use the same abbreviation or acronym in the TM.

5.3.2 Equations. The use of equations should be held to the minimum use required by the needs of the TM user. (Refer to figure 14.)

5.3.2.1 Symbols.

a. Any enclosing symbol, such as parentheses ( ) or braces { }, are prepared just wide enough to align with the highest and lowest points of the matter enclosed. Similarly, any dividing or covering element, such as the horizontal division symbol (_____) or the top of the radical sign $\sqrt{}$, is prepared just wide enough to align with the right and left outer edges of the matter divided or covered. For example,

Source: https://assist.dla.mil -- Downloaded: 2016-12-09T23:59Z
Check the source to verify that this is the current version before use.

The input impedance is determined by:

$$Z_1' = Z_1 \left[m \ (1 - m) \frac{(K - 1)^2}{K} + 1 \right].$$

The frequency of peak attenuation, $f\infty$, is

$$f\infty = \sqrt{\frac{f_c^2}{1 - m^2}} = \frac{(15 \ X \ 10^3)}{1-(0.6)^2} = 18.75 \ kHz.$$

b. Use parentheses, brackets, and braces in the following order to set off parts of an equation: { [( )] }.

c. Whenever possible, integral signs and summation signs should be of the same height as the mathematical expressions they include.

d. Inferiors (subscripts) precede superiors (exponents) if they appear together; but if either inferior or superior is too long, the two are aligned on the left.

e. Avoid the use of the slant bar.

f. In mathematical equations, use italics for all letter symbols - capitals, lower case, small capitals, and superiors and inferiors (exponents and subscripts).

5.3.2.2 Punctuation.

a. Punctuate mathematical equations in much the same manner as text, but do not use commas to set off nonrestrictive expressions placed in a clear space between lines of text. For example:

Figure 12 shows that the described condition

$$E_c + \frac{E_b}{\mu} = 0$$

exists when the grid of V35 is just sufficiently negative to neutralize the attracting power of the plate at the cathode.

(The commas that would be required in an equivalent nonrestrictive situation in text are omitted.)

b. Use periods after equations at the end of sentences, except where their use would be meaningless or confusing to the TM user. For example,

The equivalent circuit (figure 38) shows that

Source: https://assist.dla.mil -- Downloaded: 2016-12-09T23:59Z
Check the source to verify that this is the current version before use.

Amplification in middle range of frequencies $\left\} \quad \frac{e_o}{e_s} = \mu n \right.$

c. Do not introduce an equation with a colon (:) unless the words "as follows," "the following," etc., are also used. For example,

The impedance formed by the reactance in series with resistor R7 is

$$Z = \sqrt{R^2 + (\omega L - \frac{1}{\omega C})^2}$$

(The terminal period is omitted for clarity.)

5.3.2.3 Dividing an equation.

a. Place an equation too long for one line flush on the left margin. Place the second portion flush on the right margin and balance the two parts as closely as possible. The equation is divided:

(1) Just before an equals sign (=) (Equals signs are clear on the left of other beginning mathematical signs.),

(2) Just before a plus (+) or minus (-) sign separating elements of comparable rank, or,

(3) Just before a multiplication sign (x). This type of multiplication indication should be used whenever line interruption is necessary at a multiplication point.

For example,

$$15r + 6f - 11z + 38f\ (r-1) + 23fz$$
$$= 38f\ (r + 1\ 4z\ (r^2 + f^2)$$

..in this circuit the plate current is given by the equation

$$Ip = o_1(Eg + \frac{Ep}{\mu}) + o_2(Eg + \frac{Ep}{\mu})^2 + o_3(Eg + \frac{Ep}{\mu})^2$$

b. Do not break a short equation at the end of a line. Begin the equation on the next line or center it on a line by itself.

c. All equations included in a single line must be free from ambiguity.

5.3.2.4 Alignment of equations. In a series of equations, align the major equal signs. For example,

Solution: Since $P = EI$

Source: https://assist.dla.mil Downloaded: 2016-12-09T23:59Z
Check the source to verify that this is the current version before use.

the line current is $$I = \frac{P_f}{E_L} = \frac{21,400}{2} 30 = 93.0 \ amp$$

and the field current is $$I_f = \frac{E_L}{P_f} = \frac{230}{100} = 2.3 \ amp.$$

5.3.2.5 Connecting words. Place connecting words of explanation, such as "therefore" and "similarly," flush left either on the same line with the equation or on a separate line.

5.3.2.6 Spacing. Use clear space above and below equations as needed. Center and indent any complex or hard-to-read expressions in a clear space between the lines of text. Start a series of such expressions at the left margin or indent in any consistent manner. Center and indent any important expression, regardless of complexity, to introduce or emphasize it. For example,

The value of the cutoff wavelength c is

$$\lambda c = \left(\frac{90°}{\theta_1 + \theta_2} \right) \lambda co$$

where co = 2a cutoff wavelength without ridges and satisfies the approximate equation

$$\cot \theta_2 + (b_1/b_2) \cot \theta_1 = 0.$$

5.3.2.7 Numbering and referencing to equations. When it is necessary to reference equations in the text, give the equation a reference number. The reference number consists of EQ, followed by an Arabic numeral beginning with 1 within each WP. (For example, EQ 1, EQ 2, etc.) (Refer also to figure 15.)

6. GRAPHIC REQUIREMENTS.

6.1 Illustration preparation.

6.1.1 Illustration style and format preparation. Plan, lay out, and size illustrations to effectively portray the required details, and prepare to the latest technical data.

6.1.2 Illustration detail and size.

6.1.2.1 Illustration detail. Style and techniques should be of a quality that will produce illustrations which will clearly, adequately, and economically portray the information to be illustrated. The amount of detail should be limited to that required to support the content of the illustration.

a. When text alone is not adequate, supplement the text by using illustrations for depicting procedures such as disassembly, assembly, removal, and installation. In addition, illustrations are used to describe an item, process, or procedure; call attention to details; and provide identification of assemblies, parts, and tools, etc. Number or nomenclature callouts can be used to key important items in the illustration to the text.

Source: https://assist.dla.mil -- Downloaded: 2016-12-09T23:59Z
Check the source to verify that this is the current version before use.

b. Present illustration views so that the TM user can best understand the text being supplemented. In most instances this will be as the user would view the item in the performance of the associated task. In some cases, however, depicting the procedure or location of parts and controls described in a procedure would better serve the user if shown as viewed from a different position.

6.1.2.2 Scale. Prepare illustrations to the smallest scale possible to be consistent with effective use of space and with all essential details legible. Make the sizes of the illustrations the same size as the areas they will occupy on TM pages. Refer to 5.2.11.4 for placement options.

6.1.2.3 Graphic size options. Size options for graphics are full page, ½ page, 1/4 page, and 1/8 page. Determine the size of the graphic by measuring from the top of the graphic to the bottom. More than one illustration may be placed in the designated graphic area. (Refer to figure 16.)

6.1.2.4 Letter size. The scale of text on illustrations should provide for a minimum final letter size, when printed, of 8 points. (Also refer to 5.2.10 and 5.2.11.)

6.1.2.5 Electrostatic discharge (ESD) sensitive acronym. Mark figures, drawings, and schematics with the ESD acronym in accordance with MIL-STD-1686 and MIL-STD-40051.

6.2 Elements of illustrations.

6.2.1 Border rules and boxes. Border rules and boxes should not be used for single illustrations, but are used to separate multisection illustrations on the same page or for locator/detail views. (Refer to 6.3.7, 6.3.11, and 6.3.12, and to figure 19.)

6.2.2 Use of the human figure. When necessary, illustrations may include a human figure or parts of the body. The following stipulations apply.

a. Jewelry should not appear in any illustration.

b. The illustrated human figure should not obscure necessary details of the item(s) being illustrated.

c. The clothing for the human figure should be illustrated according to samples provided by the acquiring activity.

d. A cross-section of races should be used.

e. A cross-section of sexes should be used except when a task is gender specific.

6.2.3 Credit lines.

a. The photographer's or illustrator's name should not appear on any illustration.

b. A manufacturer's name, symbol, or trademark should not appear on illustrations for the purpose of identifying the illustration.

6.2.4 Callouts. Index numbers, reference designators, nomenclature, leader lines, sweep arrows, legends, and other identifiers are used, when necessary, to identify significant features.

Source: https://assist.dla.mil -- Downloaded: 2016-12-09T23:59Z
Check the source to verify that this is the current version before use.

a. Use leader lines or sweep arrows to help the readers orient themselves with respect to the illustration and to provide directional movement in tasks.

b. Callouts are prepared by a mechanical or electronic method, rather than by freehand lettering. (Callouts on engineering drawings prepared in accordance with 6.3.6 are acceptable.)

c. Callouts and their leader lines should be easily distinguishable from components and other lines of the illustration.

d. Callout leader lines or arrows are straight lines where possible. Don't allow leader lines to cross each other.

e. When practical, all callouts should be placed outside the boundaries of the parts illustrated so that the parts are not obscured.

f. Use a type size no smaller than 8 points and no larger than 10 points.

g. Use uppercase lettering for nomenclature callouts.

h. Nomenclature may appear on illustrations only if it can be done without crowding or reducing type size so as to make reading difficult. (Use diagram callouts of no smaller than 8 points.)

i. When an item is first illustrated and its location has not yet been specified, a simplified general locator illustration may be used to identify the location of the equipment item within the system. (Refer to figure 23.)

6.2.4.1 Index numbers. Index numbers start with Arabic numeral 1 and continue consecutively. Index numbers continue in sequence from one sheet to another in a set of multisheet illustrations.

Author's Note: When a series of illustrations are used within the same informational, operational or maintenance task (e.g., theory, operator instruction, or removal procedure), index numbers should continue from one illustration in that series to the next, however, if an item that already has been assigned an index number is used in more then one illustration in that series, it must retain the same index number.

a. Index numbers should be in clockwise sequence (beginning at 11 o'clock), disassembly sequence, or in order of mention in the text.

Author's Note: To improve clarity within a TM, all three index number sequence methods may be used, however, the sequence method within individual chapters should remain consistent.

b. Identify all items shown as exploded (Refer to figure 17). Items drawn in phantom need not be identified. (Refer to figure 17.)

c. Index numbers should not be contained within circles unless required for a specific reason in MIL-STD-40051.

6.2.5 RPSTL figures. For RPSTL figures, the sequence of index numbers start at 11 o'clock and proceed clockwise.

Source: https://assist.dla.mil -- Downloaded: 2016-12-09T23:59Z
Check the source to verify that this is the current version before use.

6.2.6 Nomenclature. Nomenclature of more than one line should have the left margin justified when placed on the right side of the illustration, right margin justified when placed on the left side, or stacked with the text centered when on the top or bottom of the illustration. All lines of copy should parallel the horizontal edges of the figure, whenever possible. (Refer to figure 33.)

6.2.7 Leader lines and arrowheads. Do not allow leader lines to touch the callout. Do not allow arrowheads to enter the object to which they apply. If it is necessary to enter the object to provide for greater clarity, a breakoff symbol should be used in lieu of an arrowhead. (Refer to figure 33.)

a. Lines are to be uniform, short, and as straight as possible; avoid the use of dogleg-shaped lines unless absolutely necessary.

b. Leader lines should be placed at an angle.

c. Arrowheads may be added for clarity.

d. Arrowheads should be uniform in shape and size when multiple arrowheads are used on a page.

e. Lines and arrowheads should not cross or come in contact with other callout lines or arrowheads nor should they obscure essential details.

6.2.8 Illustration legends. When necessary for clarity, legends are prepared to identify index numbers on illustrations.

a. Legends are a part of the illustration and are not be placed in the text area.

b. The header is prepared in the following format: Legend.

c. If the legend is continued, repeat the header, followed by a dash and the word "Continued."

d. The list is placed one line space below the heading. It is single spaced, and indented two spaces.

e. The list consists of the index numbers corresponding to the index numbers on the illustration, followed by a period, two spaces, and the name/description of the item.

f. Only that information which is necessary to clearly identify the items is included in the legend.

g. Where methods such as tabular presentation are used (i.e., in a RPSTL), no legends are required.

6.2.9 Color in illustrations. Black and shades of black (one color) are normally used for TMs. Prior approval for use of color must be obtained from the acquiring activity. The acquiring activity will provide written approval, designating color(s) to be used.

a. When color (other than black) is required, it should be held to the minimum absolutely necessary to highlight or clarify important information.

b. The number of colors should be kept to a minimum by use of various techniques such as tints, patterns, cross-hatching, and dots.

Source: https://assist.dla.mil -- Downloaded: 2016-12-09T23:59Z
Check the source to verify that this is the current version before use.

c. Any number of shades of a primary color used can be considered as one color (e.g., a two-color printing could consist of black and three shades of red).

d. When color is approved/specified, the primary colors of red and blue should be used first.

e. Yellow should not be used alone.

6.2.10 Identification numbers. Each illustration is assigned a unique identification number provided by the acquiring activity. (Refer to figure 17.)

a. Contractor's identification number may be used when approved by the acquiring activity.

b. When the identification number is to be printed in the TM, such numbers should be approximately 4- to 6- point type and placed in the lower right-hand corner of the illustration (within the graphics area) sufficiently removed to avoid being confused as part of the illustration.

6.3 Types of illustrations.

6.3.1 Illustrations for procedures. Illustrations developed to support operator or maintenance procedures should not contain the text steps on the illustration (in the figure area).

Author's Note: For the most part, when text is part of a graphic it is not intelligent (i.e., graphics prepared digitally are in a CGM, CALS raster, or IGES format, therefore a text authoring system can not specifically access or modify the graphic text data). Modification of the graphic text data usually requires the use of sophisticated graphic software.

a. Illustrations for procedures should supplement the text by clarifying procedures which are of a special nature or are not obvious.

b. Locate illustration(s) (except for foldouts) as close to the text step(s) as possible.

c. It is not necessary to illustrate each step of a maintenance procedure, such as the removal of screws with an ordinary screwdriver, lifting off a cover after the screws have been removed, etc.

6.3.2 Tool and test equipment illustrations. Only uncommon or unusual uses and connections for test purposes are illustrated if it is essential to do so to avoid misunderstanding. Unusual operations should also be illustrated. Standard tools and test equipment are not illustrated, nor should self-evident or generally known uses be shown.

6.3.3 Illustrations of special tools and test equipment. Special tools and test equipment should be illustrated.

6.3.4 Line drawings. Line drawings must be of high reproduction quality.

a. Primary lines that create the basic outline (object line) of the drawing components must have sufficient density (darkness), line weight, and sharpness to accommodate reproduction. When electronically or optically reproduced, the primary lines should require no additional graphic enhancement.

b. Secondary lines, such as those used to indicate extensions or measurements, are lighter than primary lines, but strong enough to reproduce clearly at the required reproduction size.

Source: https://assist.dla.mil -- Downloaded: 2016-12-09T23:59Z
Check the source to verify that this is the current version before use.

c. Shading may be used to give substance and form to the item depicted, to sharpen the contrast between the subject and its background, or to increase effectiveness.

(1) Shading and shadows are used only when necessary to provide a clear understanding of form, shape, or depth.

(2) Shading effects are not to be used for decorative purposes.

d. Accented lines may be used to emphasize detail when necessary.

e. Lined, cross-hatching, or mechanical patterns used instead of color should remain clearly defined on the Final Reproducible Copy (FRC). (Refer to figure 18.)

6.3.5 Photographs. When approved for use by the acquiring activity, photographs (including prescreened photographs and continuous tone artwork) may be used for illustrations. (Refer to 6.5.1.) Photographs should not be used on foldouts.

6.3.6 Engineering drawings. Do not use engineering drawings unless specified otherwise by the acquiring activity. When used, the drawings should meet the following criteria:

a. They should comply with MIL-STD-100 or user needs. They should be modified, as necessary, to meet the legibility, format, and production requirements described in this document and MIL-STD-40051.

b. All unnecessary data that would reduce the comprehension or clarity of the drawing should be removed. Data includes borders, title blocks, manufacturer's notes, and other irrelevant material.

c. They must be reduced to meet technical manual page size restrictions.

6.3.7 Multisection illustrations. Prepare multisection illustrations, when necessary, to identify significant features on an illustration. (Refer to figure 19.)

a. Each section of a multisection illustration is identified by a capital letter.

b. Sections may or may not be titled, but if one section is titled, all are titled.

(1) Each title, with the identifying letter as its first character, is centered with respect to the section to which it applies.

(2) Where titles are not used, the identifying letters are centered.

(3) Identifying letters and titles are larger and bolder than any other lettering on the illustration.

c. Sections are clearly separated by lines. Separation by shading is not used.

6.3.8 Multiview illustrations. Multiviews may be prepared when necessary to identify significant features on an illustration. (Refer to figure 20.)

a. Each view should be oriented and enlarged as necessary to identify significant features of the item.

Source: https://assist.dla.mil -- Downloaded: 2016-12-09T23:59Z
Check the source to verify that this is the current version before use.

b. To show orientation, use arrows or text (i.e., "Rotated 180 degrees.") as it relates to the main illustration.

6.3.9 Foldout and multisheet illustrations. When specified by the acquiring activity, foldout illustrations may be prepared. Foldout-foldup pages are not permitted. When an illustration must be larger than a single TM page for clarity or to be easily viewed by the TM user, multisheet and foldout presentation should be considered. Multisheet illustrations are the preferred format. When an illustration that normally would be presented as a foldout is instead prepared as a page size multisheet continuous flow diagram (refer to figure 21), the following guidelines should be followed:

a. Allowance should be made on each page for the termination of data within a 7-1/2-inch image area.

b. Data (e.g., nomenclature or symbols), with the exception of horizontal lines, should be placed no closer than 1/8-inch from the image area limit after reduction.

c. Lines should not be vertically displaced during the transition from the image area on one sheet to the next sheet.

6.3.10 Exploded views. An exploded view (refer to figure 22) is a illustration that shows a unit separated or disassembled but with all the parts positioned in correct relationship to each other. Exploded views are used in Repair Parts and Special Tools Lists (RPSTLs) and, when practical, to support removal/installation and disassembly/reassembly instructions. The following guidelines are recommended to ensure clarity of presentation:

a. Index numbers, keyed to a legend, list, or text reference, can be used to identify parts.

b. No more than 20 items should be called out in a 7- by 10-inch area if nomenclature is used.

c. Whenever possible, the average maximum number of callouts within a 7- by 10-inch area should be 70. All callouts (numerals) should be outside the boundaries of the parts being illustrated.

d. If the criteria of subparagraphs b. and c. above cannot be met, use detail views of the figure.

e. If the equipment is of such a nature that it cannot be adequately illustrated by a single exploded view, it may be exploded by subassemblies as separate views. In such cases, locator views can be used, as needed, to orient the user to the proper area. (Refer to 6.3.11.)

f. Items should be numbered sequentially, starting with the number 1 (in clockwise, disassembly, or in the order mentioned in text sequence, depending upon how the exploded view is used).

g. To assist in location, the relationship of all parts in an exploded view should be clearly indicated by axis lines.

h. Limit the level of detail to that required to positively identify parts. Excessive detail makes the illustration complex and does not contribute to useability.

i. Use straight (not dog-legged) arrowhead leader lines at all times, if possible.

j. Callout leader lines should not cross each other.

Source: https://assist.dla.mil -- Downloaded: 2016-12-09T23:59Z
Check the source to verify that this is the current version before use.

k. Use broken lines for parts shown merely for reference, but not called out. Ensure that the broken lines are legible.

l. Center (axis) lines should be used on exploded views to show parts relationship.

6.3.11 Locator views. When required by the complexity of the equipment or to assist in user orientation of part(s), illustrations should contain a locator view. The overall equipment or item is shown with the area covered by the view highlighted. (Refer to figure 23.)

6.3.12 Detail views. A detail view of a part or subassembly should be illustrated when the subject matter cannot be clearly illustrated in the main view. The desired subject matter may be identified with detail letter(s) or index number(s) on the main view and illustrated, as required, in the detail. (Refer to figure 23.)

6.3.13 Scanned images. Scanned images and photographs should be of such quality and resolution so as to meet reproduction requirements for the FRC.

6.3.14 Cartoons. Do not use cartoon-type drawings and other similar visual techniques unless specified otherwise by the acquiring activity. When used, such drawings should not include copyrighted cartoon characters and must serve a functional purpose.

6.3.15 Diagrams. The following paragraphs describe various types of diagrams that may be required to support the operation and maintenance data contained in the TM.

6.3.15.1 Specification requirements. Use the following specifications as applicable.

Subject	Equipment Covered	Specification
Abbreviations	All	MIL-STD-12
Drafting Practices	Mechanical Electrical and Electronic	ANSI Y14.15-1966 (R1973)
Engineering Drawings	All	MIL-STD-100
Graphic Symbols	Electrical and Electronic Mechanical Digital (Logic) Fluid Power	IEEE 315A-86, IEEE 280-85, MIL-STD-17-1 and 2, IEEE 91-84, ANSI Y32.10
Reference Designators	Electrical and Electronic	IEEE 200-75
Unit Symbols	All	IEEE 260-78
Logic	All	IEEE 91-84

6.3.15.2 Designations, diagrams, and symbols. Designations, diagrams, graphic symbols, and letter symbols used on illustrations are in accordance with specifications listed in 6.3.15.1.

a. As specified by the acquiring activity, new designations, diagrams, and symbols not covered by the specifications may be used if explained in the TM's "How To Use This Manual" section.

Source: https://assist.dla.mil -- Downloaded: 2016-12-09T23:59Z
Check the source to verify that this is the current version before use.

b. Symbols are spelled out when the symbols cannot be reproduced by the equipment or software used to prepare the final reproducible copy (e.g., plus for +).

6.3.15.3 General methods. The specifications listed in 6.3.15.1 are to be followed for general methods in acquiring diagrams. Other requirements are as follows,

a. Layout. Most diagrams, position of signals, and components are to be prepared in functional order. (For example, signals are shown in functional order, not connection pin number order.)

(1) Avoid clutter — allow no more than 3 components per square inch or 20 crossed lines per four square inches.

(2) Allow one-eighth inch between parallel lines. Functional flow within diagrams is left-to-right/top-to-bottom, with right-to-left feedback.

(3) Diagrams should be laid out to eliminate jogs in lines where possible.

b. Consistency. A standard referencing system for associated text, signal flow, and other diagrams should be used.

(1) Standard graphic symbols should be used when possible.

(2) If special graphic symbols are required, they should be made visually distinctive from other graphic symbols used and included in a special symbols chart.

(3) Official nomenclature is used for hardware, controls, indicators, switches, etc.; consistent, standard nomenclature is used for functions, signals, etc.

c. Appropriate detail. All information required to fulfill the intended purpose of the diagram should be used; overcrowding must be avoided.

(1) Complete detail should be provided for hardware, function, signal identification, measurement data (voltages and waveforms), explanatory text, connectors, terminal boards, pin numbers, signal names, reference designators, component values and tolerances, replacement components, etc.

(2) All inputs and outputs should be clearly labeled. In single-page diagrams, termination points are shown for every relevant wire, pipe, etc. In multipage diagrams, unterminated line segments should be identified by appropriate symbols with references maintaining continuity from page to page.

(3) To the extent possible — and to keep diagram format consistent for readability, place inputs and associated labels near the diagram left or top edge and outputs and associated labels near the diagram right or bottom edge. The continued portions of multisheet diagrams and schematics should align or should be labeled.

(4) For locating information, relevant components are identified on the diagram or referenced to an explanatory listing. Where applicable, the wording on the diagram should correspond exactly with the wording in the text.

d. Inappropriate data. Data not related to the purpose of the diagram should not be included. Pertinent detail of nonreparable and nonreplaceable components should be held to a minimum.

Source: https://assist.dla.mil -- Downloaded: 2016-12-09T23:59Z
Check the source to verify that this is the current version before use.

6.3.15.4 Portraying signal flow. Signal flow, especially for electrical and electronic equipment, critically affects the understandability of diagrams. To assist the TM user in following the diagram, where possible, major signal or pressure flow should be from left to right, and feedback or return flow should be from right to left. As applicable, the methods for portraying signal flow outlined in 6.3.15.4.1 through 6.3.15.4.3 should be used.

6.3.15.4.1 Signal connections. Signal connections can be portrayed in one of three methods.

a. Point-to-point method. Shows each signal separately with a continuous line to represent its flow. (Refer to figure 24.)

b. Highway method. Blends two or more signals together in a single line. (Refer to figure 24.) This method is useful in showing the flow of a group of related signals. Any number of signals may be blended together. Any signal that has been blended into the main line is blended out at some other point on the line. Once a signal has been blended out of a line, it can no longer be present on that line. Each signal blended in or blended out of the line should be identified.

c. Interrupted flow method. Use special symbols to interrupt signal flow. This method may be used within a single sheet of a diagram, between sheets of a diagram, or between diagrams. Refer to paragraph 6.3.15.4.1.1 for types of special symbols used to interrupt signal flow.

6.3.15.4.1.1 Techniques within a single sheet of a diagram. Interrupted flow within a single sheet diagram is depicted using one of the following techniques.

a. Oval connector. Used to continue signals from one area of a sheet to another area.

(1) Any number of signals may be bracketed together.

(2) Each signal is identified at its source bracket and destination bracket.

(3) Oval connectors should have a unique letter identifier inside the oval. (Refer to figure 25.)

(4) The position of the source and destination connectors can be identified by zone numbers. (Refer to 6.3.15.4.1.2b.)

b. Signal returns. Used to continue signal returns within a single sheet of a diagram.

(1) Returns have a unique number identifier inside the network.

(2) Each return is labeled the first time it appears on the diagram (preferably on the left edge of the diagram). (Refer to figure 26.)

c. Breakoff symbols. Only power forms, clock pulses, and other multiuse, minor symbols use the breakoff symbol technique.

(1) Each signal is identified adjacent to its breakoff symbols.

(2) The source of signals is shown at the left edge of the diagram. (Refer to figure 26.)

Source: https://assist.dla.mil -- Downloaded: 2016-12-09T23:59Z
Check the source to verify that this is the current version before use.

6.3.15.4.1.2 Techniques between sheets of a diagram. Interrupted flow between sheets of a diagram should be depicted using one of the following techniques.

a. Boat symbol. Used to continue signals from the right edge of one sheet to the left edge of the following sheet within a multisheet diagram (adjacent sheets of a diagram only).

(1) Used for single signals only.

(2) Boat symbols have a unique letter inside the boat. (Refer to figure 27.)

b. Oval connector. Used to continue signals from one area of a diagram to another. Application is the same as within a single sheet of a diagram. (Refer to figure 25.) For identification of source and destination areas, the following recommended zoning requirements are used for multisheet diagrams:

(1) Vertical zones are numbered; horizontal zones are lettered.

(2) The number of horizontal zones are limited to 10.

(3) Zones are always numbered as below, even if all zones are not used on any sheet.

Sheet 1	Starts with Zone 1
Sheet 2	Starts with Zone 11
Sheet 3	Starts with Zone 21, etc.

6.3.15.4.1.3 Techniques between diagrams. Interrupted flow between diagrams is depicted using one of the following techniques.

a. Block technique. Figure number (name optional), connector and pin numbers, and zone numbers are included. (Refer to figure 27.)

b. Oval connectors. Source and destination figure numbers are inserted before zone references. (Refer to figure 25.)

c. Pyramid diagram. Diagram number is included from one diagram to another. (For example, include reference to 1 on diagram 2 and reference to 2 on diagram 1.) (Refer to figure 27.)

6.3.15.4.2 Signal difference. Various techniques are available to indicate signal flow, signal importance, and type, such as the following. (Refer to figure 28.)

a. Use wide lines to represent major signals.

b. Use special arrowheads to indicate signal types.

c. Use different colors if approved by the acquiring activity (refer to 6.2.9).

6.3.15.4.3 Signal junctions. The relative importance of signals may also be indicated by the way signal junctions are represented. Subordinate junctions are used to indicate differences in signal importance. Coordinate junctions are used to indicate equality in signal importance. (Refer to figure 29.)

Source: https://assist.dla.mil -- Downloaded: 2016-12-09T23:59Z
Check the source to verify that this is the current version before use.

6.3.15.5 Schematic and functional diagrams.

6.3.15.5.1 Schematic diagrams. Schematic diagrams show every maintenance significant functional component and functionalize complex assemblies which are nonreparable.

a. Piece part details are shown only when replacement is authorized at the maintenance level covered or when understanding is required for fault isolation.

b. For nonreparable assemblies, all inputs and outputs are shown with enough detail to understand how inputs relate to outputs (complete details for simple circuits and symbols for complex circuits). (Refer to figure 30 and figure 31.)

6.3.15.5.2 Functional diagrams. Functional diagrams include schematics, wiring and piping diagrams, logic diagrams, flow charts, and block diagrams.

a. Functional diagrams (block diagram only) show the complete system or subsystem on one sheet (if possible). (Refer to figure 32.) Methods to be used include functionalizing components; grouping subfunctions into functions; or continuing until the complete system or subsystem can be shown on one sheet (may be a foldout, when approved by the acquiring activity, refer to 6.3.9).

b. Functional diagrams should provide enough details to relate the input to output signals by using arrowheads to indicate signal flow direction when necessary and specifying signal characteristics and tolerances in pictorial or tabular form.

c. Functional diagrams should account for all maintenance significant components by ensuring the user can relate the schematic diagram to the functional diagram; blocking the components on the schematic to correspond with blocks on the functional; or providing a table relating components to functional blocks.

d. Functional diagrams should show hardware boundaries by using solid, dashed, or dotted lines; various line weights; or different colors or shades (when approved by the acquiring activity, refer to 6.2.9).

6.3.15.5.3 Test point identification symbols. Test points that are not readily identifiable on diagrams and illustrations (e.g. junction of R4 and R12) are considered artificial test points and should be identified by test point symbols. Identification of test points by symbol is not employed where test points are readily identifiable by other means (e.g. test jacks (TP-5), connector pin (J1-M), and relay pin (K4-2) are readily identifiable points and should not be identified by test point symbols). The symbol for artificial test points is composed of an encircled upper case letter (identifying the component on which the test point is located) and an Arabic numeral (in numerical sequence on the component). These test points are referred to in text as test point A1, test point A2, etc. Different letters should be assigned to each component (on a diagram); for example, test points A1, A2 and A3 in component 1, test points B1, B2 and B3 in component 2. All test points will be identified on the diagram by their assigned identifying code.

6.3.15.6 Pictorial diagrams. (Refer to figure 33.)

a. Pictorial diagrams are used to show the physical view of components and show relative location and size when doing so aids in the understanding of relative information. When necessary to portray position or relative location, other equipment items may be shown in phantom.

b. All maintenance significant functional components are identified with leader lines.

Source: https://assist.dla.mil -- Downloaded: 2016-12-09T23:59Z
Check the source to verify that this is the current version before use.

c. Arrowheads are used to show direction of mechanical action or fluid flow.

d. Data is presented from the user's viewpoint by only using orientations that are clearly visible to the user.

e. Unless specified otherwise by the acquiring activity, waveform data will be shown.

(1) When required, waveforms are shown pictorially, and all necessary supporting data should also be shown.

(2) If not provided on functional and schematic diagrams and required in support of maintenance tasks, waveform diagrams should provide the waveforms and nominal values at designated points for normally functioning equipment or systems as seen on an oscilloscope.

6.3.15.7 Cutaway diagrams. Cutaway diagrams (conventional cutaway techniques) are used only when necessary to show the internal functioning or flow. Fluid flow is identified using patterns or color when approved by the acquiring activity. (Refer to figure 34.)

6.3.15.8 Logic diagrams. (Refer to figure 35.)

a. Logic diagrams are used to show digital circuitry operation. Graphic symbols from IEEE STD 91-84 are used. If the logic circuit has no specified symbol, it can be identified with a rectangle that is labeled to show all circuit functions.

b. Power and clock connections are identified in a truth table or are connected using breakoff signals.

c. When necessary for clarity, a truth table or timing diagram should be prepared or should be referenced from another diagram. For logic functions, the truth table timing diagram may be shown inside a block to describe the relation of input to output signals. (Whenever possible, truth tables should be placed in the text area and not on the figure.) (Refer to figures 36 and 37.)

6.3.15.9 Simplified diagrams. Simplified diagrams include key components for explanatory purposes and omit selected components or groups of components, or details for clarity. Simplified circuitry and/or simplified functional divisions indicate excluded or included components in the diagram title (for example, "Figure 3. Simplified R-T Control Circuit with Cockpit Control Switch in Off Position (All Relays Unoperated.")). Refer to figure 38.

6.3.15.10 Partial diagrams. Partial diagrams are used to show all circuit details completely and reference all destinations of input or output connections. (Refer to figure 39.)

6.3.15.11 Test diagrams. There are two types of diagrams used to support test procedures. Test diagrams (refer to figure 40) are used to show test stimuli, item (or circuitry) under test, and test measurement components. Test setup diagrams (refer to figure 41) are used to show the interconnection between the test equipment and the unit (s) under test. The setup diagram may be presented schematically or pictorially.

a. When diagrams exist for the item under test, a block diagram representation may be used.

b. In TMs containing testing data, the item under test should be emphasized (shown in detail); in test equipment maintenance TMs, the test equipment should be emphasized.

Source: https://assist.dla.mil -- Downloaded: 2016-12-09T23:59Z
Check the source to verify that this is the current version before use.

6.3.15.12 Power distribution diagrams. Power distribution diagrams depict components involved in power input, power form generation, and power distribution. They are grouped by power flow. (Refer to figure 42.)

6.3.15.13 Pyramid diagrams.

a. Pyramid diagrams are a set of interrelated diagrams consisting of,

(1) A master block diagram.

(2) Detailed block diagrams.

(3) Schematic diagrams.

b. If the equipment covered is complex, several levels of detailed block diagrams may be required. (Refer to figure 43.)

6.3.15.14 Wiring and interconnection data. Weapon systems and equipment which have wiring or cabling must include interconnection information in one or more forms such as cable diagrams, wiring diagrams (MIL-STD-863), or wire lists/tables. In general, the diagrams should meet the requirements for illustrations and diagrams presented above. The lists and tables must meet the requirements for lists and tables provided in MIL-STD-40051. Additional detailed requirements that apply to this information is given in the following paragraphs. Interconnection information has the following characteristics,

a. Information keyed to the appropriate maintenance level.

b. User experience level requirements met.

c. Diagrams simple and straightforward.

d. Only required data on diagrams.

6.3.15.14.1 Cable diagrams. Cable diagrams are included in a TM if the technician must install or remove cables when performing installation, assembly, disassembly, modification, service, etc.

a. Cable diagrams provide all the information necessary to make the electrical connection between assemblies, chassis, bays, units, and systems in an easily understood format.

b. Each cable diagram should consist of an illustration and accompanying table. If cable routing is of a special nature, it should be so noted. For very complex systems where routing is of great importance, additional diagrams showing desired cable locations may be necessary. (Refer to figure 44.) The accompanying table should meet the following requirements:

(1) Cable entries are listed in numerical order or by preferred connection sequence.

(2) Cable origin is preceded by the cable destination.

(3) Cable origin and destination includes assembly name, assembly jack number, and cable plug number.

Source: https://assist.dla.mil -- Downloaded: 2016-12-09T23:59Z
Check the source to verify that this is the current version before use.

(4) Both table and illustration should appear on the same page or facing pages. The table is considered text and is not part of the figure.

c. Cable diagrams show all related connectors. Assembly names and jack numbers should be listed.

d. For simple equipment, a table may not be needed, and a interconnection diagram that actually shows the routing of the cables may be substituted (refer to figure 45). The internal connections of the equipment or assemblies are usually omitted.

6.3.15.14.2 Wiring diagrams.

a. If complete coverage of wiring is included in the schematic, no special wiring diagrams are required.

b. Wiring diagrams provide an illustration of signal flow.

c. Wiring diagrams may also be used to show how to connect wires, when required. (Refer to figure 46 and ANSI Y14.15.)

d. Wiring diagrams should include the following requirements.

(1) Each drawing should be limited to an individual system to eliminate overly large foldout illustrations that would be confusing to the user.

(2) Point-to-point wiring between connectors and terminals is preferred.

(3) Continuity of wiring through junction boxes and other equipment should be shown to permit following the wires from their origin to their termination.

(4) Terminal, connector, and wire identifiers that appear on the hardware should be used.

(5) Signal codes are assigned to wires to help the user follow signals in equipment that has complex wiring.

(6) Only the wiring that is appropriate for the level of maintenance for which the TM is written is shown.

(7) A list of components giving the reference designation, nomenclature, location, and access cover (as applicable) for every component on each diagram.

(8) Component outlines use heavier lines than those used for wires.

(9) Every wire or wire segment is labeled with its wire number.

(10) Turning any wiring diagram sideways (90 degrees) on a page should be avoided, when possible.

(11) A logical, easy-to-follow technique should be used to show the wire continuation onto other diagrams.

Source: https://assist.dla.mil -- Downloaded: 2016-12-09T23:59Z
Check the source to verify that this is the current version before use.

6.3.15.14.3 Wire list. Wire lists, if available, can be used in lieu of wiring diagrams when approved by the acquiring activity. Wire lists are normally prepared for cables and complex wire runs that the technician must fault isolate and repair. Wire lists are usually computer generated and are being used more and more by weapon system contractors in lieu of wiring diagrams in an effort to reduce design and life cycle costs.

a. Wire lists provide wiring data in tabular format. (Refer to figure 47 and ANSI Y14.15.)

b. Connector keying diagrams can be included when necessary.

c. Wire lists are prepared in the following format.

(1) One table in hardware number order should be prepared.

(2) Another table in signal code number order should be prepared.

(3) Wire origin to wire destination should be listed.

(4) Terminal, connector, and wire identifiers that appear on the hardware should be listed.

(5) Only the wiring that is appropriate for the level of maintenance for which the TM is written is listed.

6.3.15.15 Piping diagrams. Weapon systems or equipment which include piping in their design are supported with information in the form of piping diagrams. The diagrams should meet the requirements for illustrations and diagrams presented in this handbook. (Refer to figure 48.)

6.3.15.16 Electronic items. (Refer to figure 49.)

a. Exploded views should not be used to identify electronic items such as components on circuit cards that are not to be disassembled for repair. Item numbers should not be stacked (i.e., showing the item numbers next to a bar at the end of a leader line) unless each item and the item number are shown in a detailed view elsewhere on the illustrations. In the RPSTLs, all repairable electronic items are identified with a reference designator and an item number.

b. Tables are used rather than item leader lines to provide clarity. The table(s) should be part of the figure and not part of the textual data. For RPSTLs, the reference designators for electronic items should cross-reference the item numbers used in the associated parts list. (Refer to figure 50.)

c. Applicable reference designators are placed above the item number.

6.3.15.17 Charts and graphs as illustrations.

a. Information which would be most usable as a chart or graph should be so presented.

b. Charts and graphs are prepared as illustrations. Instructions should be provided for use and interpretation of complex graphs.

Source: https://assist.dla.mil -- Downloaded: 2016-12-09T23:59Z
Check the source to verify that this is the current version before use.

6.3.15.17.1 Line graphs.

a. Clutter. The number of ideas conveyed per graph should be minimized. Line graphs should depict a maximum of four relationships between the axis variables. Lines depicting relationships are to be coded to distinguish one from another.

b. Orientation of axes. If there is a natural orientation for the axes (for example, altitude on the vertical axis) the axes are to be so oriented.

c. Grid lines. The number of grid lines used are such that the user can read values to the required degree of accuracy. Size of the illustration is such that the grid lines should be no less than 0.1 inch apart. Grid lines are lighter than the graph lines and should not obscure detail necessary for proper use of the graph.

d. Graph scales. Graph scales are linear or nonlinear as required for proper comprehension and use. The axes should be labeled to indicate the variables and units of measurement.

6.4 Requirements for digital graphics files. Graphics files are delivered in one of three acceptable graphics formats: Computer Graphics Metafile (CGM) (MIL-PRF-28003), Continuous Acquisition and Life-Cycle Support (CALS) raster (MIL-PRF-28002), or Initial Graphics Exchange Specification (IGES) (MIL-PRF-28000).

a. The CGM file format is the preferred graphics file format.

b. All graphics files for a particular TM should be supplied in the same graphics format if practical. Otherwise, files may be delivered in any combination of the allowable formats.

c. Appropriate header and identification information should be included in each graphics file. Refer to the applicable specification for the specific requirements.

6.5 Requirements for final reproducible copy.

6.5.1 Line drawings, prescreened photographs, digitized artwork, and combination illustrations. When digital files are not required, line drawings should be prepared on a suitable material, capable of maintaining consistent and permanent high-density reproducible values (such as acetate or its equivalent).

6.5.1.1 Line drawings. Only line drawings should be prepared.

a. Existing illustrations, photographs, or engineering drawings may be used where they meet the requirements of this document.

b. Line drawings may be prepared from source data and equipment photographs.

6.5.1.2 Prescreened photographs. Although not preferred, prescreened photographs are acceptable as final reproducible copy provided they are screened only once. The screen of the final sized illustration will be specified by the acquiring activity. When prescreened photographs are used, they should be clearly marked to indicate prescreening. Unscreened continuous tone photographs and/or original illustrations must be supplied with final reproducible copy.

6.5.1.3 Digitized artwork. Continuous tone artwork, whether photographs or drawings, should be clear in detail, sharp in contrast of tones, and have light and shadow in proper relation to a consistent

Source: https://assist.dla.mil -- Downloaded: 2016-12-09T23:59Z
Check the source to verify that this is the current version before use.

light source. The background should be light enough to contrast fully with the subject photographed and should extend the full width and depth of the photograph or drawing.

6.5.1.4 Combination illustrations. Combining photographs or continuous tone artwork with line drawings is not recommended.

7. REVISIONS.

7.1 Types of revisions. The WP concept precludes the need to prepare changes for TMs. Only revisions are required. There are basically three types of revisions that can be prepared for a TM. A standard revision, a pickup revision, and a complete revision. The type of revision required is based on the percentage of change required and the reason for the revision; such as, change in the equipment configuration, excess number of standard revisions outstanding, major inadequacies, cost considerations, etc. The acquiring activity will determine the type of revision required.

7.1.1 Standard revisions. A standard revision (formerly referred to as changes) is used to incorporate appropriate new information (for example, MAC changes, Modification Work Orders (MWOs), engineering drawing changes, DA Forms 2028, etc.) into the basic TM, or clarifies, corrects, or improves existing information in the basic TM. When this type of revision to a TM is required, the revision will be written in the same style and format as the basic manual.

7.1.2 Pickup revisions. A pickup revision incorporates the basic manual, all previous standard revisions, and the new data that would require the issuance of an additional revision. Only those updated, revised, or added pages for the additional revision data will have the current revision number and date. Other existing pages must be reissued without changes to dates, revision symbols or other modifications.

Author's Note: A pickup revision is prepared only in special cases, and requires acquiring activity approval.

7.1.3 Complete revisions. A complete revision requires rewrite and reorganization of the technical content of the data. All existing revisions to the basic manual will be merged. All revision dates and revision symbols will be removed and, if necessary, all WPs will be assigned new WP sequence numbers in consecutive order. If the last two digits of a WP sequence number was used for expansion during a previous revision cycle, they should be recycled to 00. (i.e., if WP 0034 01 and WP 0034 02 were inserted between WP 0034 00 and WP 0035 00, WP 0034 01 should be renumbered 0035 00, WP 0034 02 should be renumbered 0036 00 and WP 0035 00 should be renumbered 0037 00).

7.2 Revision format. Revisions consist of a revision transmittal page and applicable revision pages or work packages.

a. Each revision to a TM is numbered in sequence beginning with 1.

b. Front matter, work package, and rear matter revision pages should conform to the style and format of the basic TM and should incorporate all approved information.

7.2.1 Revised work packages. When updates to a work package are made, the entire work package must be revised and reissued. In a WP revision, WP pages, figures, tables, index numbers, etc., will be renumbered, as necessary, to eliminate all number suffixes and alpha characters and to establish correct sequence. All former revision numbers (and revision dates, if any) will be removed from pages. All partial pages and change symbols will be eliminated. All pages of a revised WP will include the applicable revision number located to the right of the page number. Although the WP sequence number is

Source: https://assist.dla.mil -- Downloaded: 2016-12-09T23:59Z
Check the source to verify that this is the current version before use.

not a permanent number, once assigned, it should not be changed unless the acquiring activity directs that the entire TM or series of TMs be reissued.

7.2.1.1 Additional WPs for a normal revision. When it is necessary to develop new work packages during a revision cycle, new WP sequence numbers can be assigned using the last two digits of the existing WP sequence numbers in the basic manual. The last two digits of the WP sequence number are used for expansion. For example, if it is necessary to insert several new WPs between WP 0045 00 and WP 0046 00 of the basic manual, the new work packages would be assigned as WP 0045 01, WP 0045 02, WP 0045 03, etc.

7.2.2 Revised front and rear matter pages. When updates to the front and rear matter of a TM are required, only the effected pages are revised and reissued. Copy is prepared for both sides of the printed page on which an update is made, even when an update is made to one side only.

7.2.3 Revision symbols. The use and insertion of revision symbols to identify technical updates for text, tables, and illustrations is covered in detail in MIL-STD-40051.

7.2.4 Supersedure notice. When the TM or revision under preparation supersedes other TMs or portions of TMs, place a supersedure notice, as provided by the acquiring activity, on the front cover. Use the applicable portions of the following supersedure notice: "This (manual or revision) supersedes (insert applicable manual or revision number or portions thereof) dated (insert date of superseded document)."

8. COMPREHENSIBILITY.

8.1 Reading Grade Level (RGL) and target audience description. TMs are written at the RGL specified by the acquiring activity. The RGL will match the capability of the manual users (i.e., the target audience description).

8.2 RGL measurements. The method used to determine RGL is optional. Measurements cited in these requirements will be based either on the technical contents sections of the entire TM or on samples obtained using a method similar to that presented in Appendix A. RGL may be calculated using the procedures described in Appendix A.

8.3 Nomenclature.

8.3.1 Nomenclature consistency and applicability. Nomenclature, other terms, and names must be consistent within a manual and throughout the RPSTL, MAC, and other directly related manuals. Statements that explain applicability for individual items of equipment will use specific serial numbers, block designations, model designations, or similar identification. Such terms as "on later equipment" and "on early serial numbers" will not be used.

8.3.2 Official/approved nomenclature. Unless specified otherwise by the acquiring activity, only approved names and official nomenclature will be used. (Official nomenclature is the nomenclature used in the RPSTL.) If unofficial nomenclature (common name) is approved, an appropriate nomenclature cross-reference list will be prepared for the TM. Shortened versions of the approved nomenclature are not considered deviations. Approved nomenclature will be used wherever the use of a common name might be ambiguous.

8.3.3 Neutral terms. TMs will make no reference to age, sex, race, or national origin. Use sex neutral terms. Terms such as "midshipman" and "workman" are considered sex neutral. Terms such as male and female connectors, pins, etc., are acceptable.

Source: https://assist.dla.mil -- Downloaded: 2016-12-09T23:59Z
Check the source to verify that this is the current version before use.

8.3.4 Military terms. Military terms used will be in accordance with Joint Pub 1-02, or any approved dictionary or glossary of Army military terms.

8.3.5 Automatic electronic test and checkout terminology. Terms used for automatic electronic test and checkout will be in accordance with MIL-STD-1309.

8.4 Standard English grammar. The U.S. Government Printing Office Style Manual will be used as a general guide for standard American English usage, i.e., capitalization, punctuation, compounding of words, numerals in the text, spelling of nontechnical words, etc. Colloquial and slang expressions will not be used.

8.5 Narrative, nonprocedural text.

a. Word order. Narrative text (nonprocedural) will be written using simple word order (subject, verb, object) to the extent possible. Modifiers, including prepositional phrases, will be as close as possible to the word modified. Simple word order will ordinarily be used for description and discussion statements such as warnings cautions and notes.

b. Topical sentence. When necessary, for greater clarity, the first sentence of each paragraph will be the topical sentence. The topical sentence describes or summarizes the content of the paragraph. All information in the paragraph relates to the topical sentence.

c. Limitations for nonprocedural text. Explanatory, descriptive, or theoretical text will not contain procedures.

8.6 Procedural text. Detailed task steps will be identified and then properly worded for the target audience. Task steps will be organized in a logical order. They will be presented so that they sequentially show what action the user will be performing or what the user sees or detects on the equipment at each step of the procedure. Procedural steps will be worded and arranged in the order that will provide the most effective and efficient results. Emphasis will be placed on the specific steps to be followed, the results that may be expected or desired, and the corrective measures required when the expected results are not obtained.

8.6.1 Lead-in. Procedural steps will not be prefaced by a lead-in that merely duplicates the title as in the following example: "Disassembly of a sensing unit. The sensing unit is disassembled according to the following procedure: ..."

8.6.2 Form and content of procedures. A procedural step will be limited to a single operation or to repetitions of a single operation with the following exceptions:

a. If simultaneous operations are required, they will be listed together in the same step.

b. If the step represents a detailed procedure, so basic that the details should rarely be needed by the intended users, or if the procedure is very frequently repeated, such as turn on, turn off, and calibrate procedures, the written procedure for that step will use a single verb and cite a reference to the detailed steps (e.g., "Turn equipment ON. [See WP 0056 00 for details.]").

c. If needed, text will show verification of the result of a procedure performed in the step (e.g., "Press pushbutton A and be sure indicator A is lit.").

Source: https://assist.dla.mil -- Downloaded: 2016-12-09T23:59Z
Check the source to verify that this is the current version before use.

8.6.3 Limitations for procedural text. Procedures should not contain explanatory, descriptive, or theoretical material (except in notes, etc.).

8.6.4 Sentences in procedures. Sentences directing the actions of the user will begin with the verb (e.g., Remove four screws (1) and cover (2).). If more than one person is involved, the directions will be in the active voice, for example, Cannoneer 1 shall... while Cannoneer 2... .

8.6.5 Positive form. Procedural steps will be in positive form (i.e., "Close container." rather than "Do not leave container open.") unless the meaning demands the negative form.

9. SECURITY CLASSIFICATION AND HANDLING RESTRICTIVE MARKINGS.

9.1 General. When preparation of a classified technical manual (TM) is specified by the acquiring activity, the security classification markings will be identified in accordance with DoD 5200.1-R, DoD 5220.22-M, and Executive Order 12958. Specific markings for classified manuals, chapters, work packages, paragraphs, tables and illustrations are as prescribed herein. For guidance on security classification and handling restrictive markings on Compact Disk-Read Only Memory (CD-ROM), refer to MIL-HDBK-9660.

9.2 Overall classification. (Refer to figures 51 and 52). The overall classification assigned to all TMs agrees with the highest classification assigned to any page therein. Place the overall classification assigned to a TM at the top and bottom of the front cover, title block page and rear cover. When this results in a cover or title block page being marked with a higher classification than that assigned to the contents of that page, provide an explanation of the higher classification on that page under the bottom classification marking. For example,

CONFIDENTIAL (This page is UNCLASSIFIED)	or	SECRET (This page is CONFIDENTIAL)

9.3 Classification of table of contents. (Refer to figure 53.) Every effort should be made to use unclassified captions/titles in the table of contents. When classified captions/titles are used, place the security classification of the caption/title preceding the caption/title. The classification marking is for the caption/title only and does not indicate classification of the content of work packages, tables, or illustrations. Do not mark unclassified titles.

9.4 Classification of chapter. (Refer to figure 54.) The overall classification assigned to a chapter agrees with the highest classification assigned to any element therein. Place the overall classification assigned to a chapter at the top and bottom of the chapter title page. When the chapter title page is marked with a higher classification than that assigned to its contents, provide an explanation on that page beneath the bottom classification marking. For example,

CONFIDENTIAL (This page is UNCLASSIFIED)	or	SECRET (This page is CONFIDENTIAL)

If a chapter or a classified document does not contain any classified information, a statement may be placed under the chapter heading as follows: "THIS CHAPTER IS UNCLASSIFIED". Also, if a chapter contains classified information at one security level and can be clearly identified, an explanation may be placed under the chapter heading. For example, "THIS CHAPTER IS CLASSIFIED SECRET only because the range of the TOW missile is discussed throughout. It contains no other classified information." With situations of this type, only page marking at the top and bottom of each page is needed for that portion of the document.

Source: https://assist.dla.mil -- Downloaded: 2016-12-09T23:59Z
Check the source to verify that this is the current version before use.

9.5 Classification of work packages. (Refer to figure 55.) Each work package is considered a stand alone unit and for classification purposes is equivalent to a portion of the publication. Mark each page of the work package with the highest classification required for any element of the work package. When any page is marked with a higher classification than that assigned to its contents, provide an explanation on that page beneath the bottom classification marking. For example,

CONFIDENTIAL (This page is UNCLASSIFIED)	or	SECRET (This page is CONFIDENTIAL)

9.6 Classification of pages. (Refer to figure 56.) Mark each page (other than cover, title block page, chapter title page and work package pages) according to its highest content. When classification of two pages of one sheet (two pages back to back) differ, use the higher classification on both pages. When two pages of one sheet are unclassified, mark each page unclassified. When any page is marked with a higher classification than that assigned to its contents, explain the higher classification on that page beneath the bottom classification marking; for example,

CONFIDENTIAL (This page is UNCLASSIFIED)	or	SECRET (This page is CONFIDENTIAL)

If a blank page backs up a classified page, show the classification of the classified page on the blank page and explain the higher classification as described above. Blank pages backing up unclassified pages need not be marked. If the classification shown on the last page of a publication is not the same as that shown on the front cover, then add a blank sheet to the back of the publication showing the same classification as the front cover. The last page, if blank, or rear cover' of the publication reflects the same classification as the front cover (i.e. the highest classification of the publication).

9.7 Paragraph and table markings. (Refer to figures 57 and 58.) Mark all paragraphs, subparagraphs, steps and tables to show the level of classification contained in or revealed by it, or that it is unclassified. Classification levels are shown by the appropriate classification symbols immediately before the beginning of a paragraph or immediately following a table number or procedural step, letter or number. Use the following parenthetical symbols: (TS) for Top Secret, (S) for Secret, (C) for Confidential, and (U) for Unclassified. In marking warnings, cautions, or notes, place the appropriate marking immediately preceding and to the left of the warnings, cautions, or notes involved. The abbreviated classification markings are for internal content use only, not for overall marking of pages. These instructions apply to all new and revised publications.

9.8 Illustration markings. (Refer to figure 59.) Mark illustrations, photographs, figures, graphs, drawings, charts and similar portions of classified documents to show their classification or unclassified status. Ensure that markings stand out and are placed within the illustration. Mark captions, if used, on the basis of their content alone by placing the symbol "(TS)", "(S)", "(C)", or "(U)" immediately before the caption.

9.9 Downgrading/Declassification.

9.9.1 Downgrading/declassification notice. (Refer to figures 60 and 61.) The downgrading/ declassification notice on the cover or title block page will be in accordance with DoD 5200.1-R. (Date of classification guide not required in technical publications). The "Classified By" line will not have a calendar date but will contain the phrase "Originating Agency's Determination Required (OADR)".

Source: https://assist.dla.mil -- Downloaded: 2016-12-09T23:59Z
Check the source to verify that this is the current version before use.

9.9.2 Downgrading procedures. Classifications are lined through on the title block page when a publication's classification is changed with a new classification, if any, marked immediately below the old, and a "Classification changed to" notice will appear in the upper left corner. The notice will remain until the first following revision, at which time the new classification must be indicated. If classification of a secret publication is downgraded (with a portion of the secret material becoming confidential and a portion of the remainder becoming unclassified), or if portions of a confidential publication are downgraded, all affected pages will be prepared showing new classification, if any, for each paragraph, illustration, etc., and for the page itself. The old classification, lined out, will not be shown. If the only downgrading action is that all secret material has become confidential, and no secret or confidential material has become unclassified, changing the title block page (and explaining this with a downgrading note thereon) is satisfactory and each classified page need not be changed. (Refer to figure 60.)

Author's Note: Title page and list of effective pages are the only pages required to be printed if the only downgrading action is that all secret material has become confidential; however, the activity acquiring that update will take immediate action to change all secret markings to confidential on the final reproducible copy.

9.9.3 Declassification procedures. All security markings, disclosure notice, and nomenclature classification will be lined through when a publication's classification is cancelled, and a "Classification changed to" notice will appear in the upper left corner. Provide a statement below the notice to the effect that classification on all pages of the publication will be lined out by personnel responsible for maintaining the publication in current status. The notice will remain until the first following revision, at which time the publication will be issued unclassified. If classification of a publication is cancelled, classified pages will not be reprepared unless there are technical changes to such pages, or unless a revision of the publication is warranted. If a revision is warranted, classification will be removed from all paragraphs, illustrations, tables, and pages. If the only update to the publication is the cancellation action, a revised cover and title block page and list of effective pages/work packages will suffice. These markings will remain on the title block page until issuance of a complete revision. (Refer to figure 61.)

Author's Note: Title block page and list of effective pages/work packages are the only pages required to be printed to cancel a publication classification; however, the activity that prepared that update will take immediate action to remove all classification markings, except the title block page, from the final reproducible copy.

9.10 Reprinting classified publications. Publications are to be reprinted with existing classification markings unless they have been declassified/downgraded. Whenever reprint action is required on a technical publication that has been declassified/downgraded, every effort will be made to reprint the publication so that all required remarking has been accomplished. If the technical publication has been declassified, markings on all pages except title block page will be opaqued or taped out before the reprint action. If a publication has been downgraded from secret to confidential and final reproducible copy is available, the secret pages should be prepared showing the confidential markings so that new negatives can be prepared for these pages. If final reproducible copy is not available, the publication may be reprinted with the security markings on them, with the cover/title block page noting that "Secret" classification of all pages in this publication will be lined out and marked "Confidential" by personnel responsible for maintaining the publication in current status.

Source: https://assist.dla.mil -- Downloaded: 2016-12-09T23:59Z
Check the source to verify that this is the current version before use.

10. NOTES.

10.1 Intended use. Technical manuals prepared in accordance with the information and guidance contained in this handbook are used to support operation and maintenance of various types of equipment and weapons systems within the Department of the Army.

10.2 Subject term (key word) listing. The following terms are to be used to identify the MIL-STD-1222 document during retrieval searches.

Digitized artwork
Graphics
Hazardous materials warnings
Icons
Illustrations
Introductory material
Maintenance instructions
Operator instructions
Reading grade level
Repair parts and special tools list (RPSTL)
Revisions
Supporting information
Theory of operation
Troubleshooting information
Security classification
Work package

Source: https://assist.dla.mil -- Downloaded: 2016-12-09T23:59Z
Check the source to verify that this is the current version before use.

TM 11-6625-3178-14

TRANSPORTABLE ELECTRONIC SHOP
GENERAL INFORMATION

0021 00

SCOPE

This technical manual contains instructions for operation, checks, and adjustments, and corrective maintenance for the AN/TSM-191(V)* Transportable Electronic Shop (shelter). The shelter provides a field level direct maintenance level, protected test facility which is used to support and improve the operational readiness of Army electronic and avionic systems.

Type of Manual: Operator, Unit, Direct, and General Support Maintenance.

Model Number and Equipment Names: AN/TSM-191(V)2 Transportable Electronic Shop, AN/TSM-192(V)3 Transportable Electronic Shop, AN/TSM-191(V)4 Transportable Electronic Shop.

Purpose of Equipment: The shelter provides a field level direct support maintenance level, protected test facility which is used to support and improve the operational readiness of Army electronic and avionic systems.

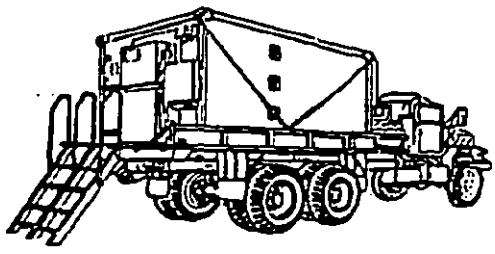

AN/TSM-191(V)2

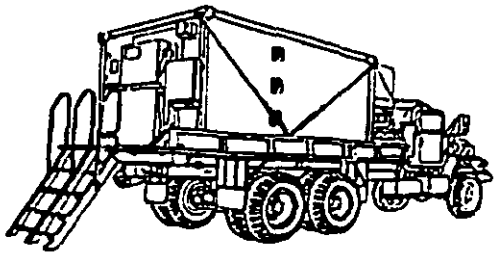

AN/TSM-191(V)3

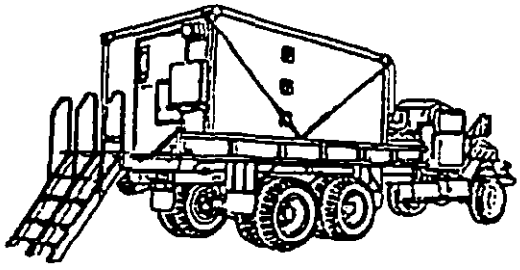

AN/TSM-191(V)4

0021 00-1

FIGURE 1. Example of an information oriented work package.

Source: https://assist.dla.mil -- Downloaded: 2016-12-09T23:59Z
Check the source to verify that this is the current version before use.

MAINTENANCE FORMS, RECORDS, AND REPORTS

Department of the Army forms and procedures used for equipment maintenance will be those prescribed by (as applicable) DA PAM 738-750, Functional Users Manual for the Army Maintenance Management System (TAMMS); DA PAM 738-751, Functional Users Manual for the Army Maintenance Management System - Aviation (TAMMS-A); or AR 700-138, Army Logistics Readiness and Sustainability.

REPORTING EQUIPMENT IMPROVEMENT RECOMMENDATIONS (EIR)

If your shelter needs improvement, let us know. Send us an EIR. You, the user, are the only one who can tell us what you don't like about your equipment. Let us know why you don't like the design or performance. Put it on an SF 368 (Product Quality Deficiency Report). Mail it to the address specified in DA PAM 738-750, or as specified by the contracting activity. We will send you a reply.

CORROSION PREVENTION AND CONTROL (CPC)

Corrosion Prevention and Control (CPC) of Army materiel is a continuing concern. It is important that any corrosion problems with this item be reported so that the problem can be corrected and improvements can be made to prevent the problem in future items.

While corrosion is typically associated with rusting of metals, it can also include deterioration of other materials, such as rubber and plastic. Unusual cracking, softening, swelling, or breaking of these materials may be a corrosion problem.

If a corrosion problem is identified, it can be reported using SF 368, Product Quality Deficiency Report. Use of key words such as "corrosion", "rust", "deterioration", or "cracking" will ensure that the information is identified as a CPC problem.

The form should be submitted to the address specified in DA PAM 738-750.

DESTRUCTION OF ARMY MATERIEL TO PREVENT ENEMY USE

For procedures to destroy this equipment to prevent its use by the enemy, refer to TM 750-244-2, Procedures for Destruction of Electronic Materiel to Prevent Enemy Use.

NOMENCLATURE CROSS-REFERENCE LIST

Common Name	Official Nomenclature
Shelter	Transportable Electronic Shop (all models)
AN/TSM-191(*)	Transportable Electronic Shop (all models)

FIGURE 1. Example of an information oriented work package - Continued.

Source: https://assist.dla.mil -- Downloaded: 2016-12-09T23:59Z
Check the source to verify that this is the current version before use.

TM11-6625-3178-14

TRANSPORTABLE ELECTRONIC SHOP
GENERAL INFORMATION - Continued

0021 00

LIST OF ABBREVIATIONS/ACRONYMS

Abbreviation/Acronym

ac	Alternating Current
BIT	Built-in Test
C	Celsius
ECU	Environmental Control Unit
MCPE	Modular Collective Protection Equipment

SAFETY, CARE, AND HANDLING

The following procedures should be observed when handling all ESD sensitive components and units containing such components. Failure to observe all of these precautions can cause permanent damage to the electrostatic device. This damage can cause the device to fail immediately or at a later date when exposed to an adverse environment.

1. Turn off and/or disconnect all power, signal sources and loads used with the unit.
2. Place the unit on a grounded non-conductive work surface.
3. Ground the repair operator using a non-conductive wrist strap or other device using 1 megaohm series resistor to protect the operator.
4. Ground any tools (including soldering equipment) that will contact the unit. Contact with the operator's hand provides a sufficient ground for tools that are otherwise electrically isolated.
5. All electrostatic sensitive replacement components are shipped in non-conductive foam or tubes and must be stored in the original shipping container until installed.
6. When these devices and assemblies are removed from the unit, they should be placed on the non-conductive work surface or in non-conductive containers.
7. When not being worked on, place deconnected circuit boards in plastic bags that have been coated or impregnated with a non-conductive material.
8. Do not handle these devices unnecessarily or remove them from their packages until actually used or tested.

0021 00-3

FIGURE 1. Example of an information oriented work package - Continued.

Source: https://assist.dla.mil -- Downloaded: 2016-12-09T23:59Z
Check the source to verify that this is the current version before use.

TM 9-1005-319-23&P

BLANK FIRING ATTACHMENT (M15A2) MAINTENANCE **0062 00**

THIS WORK PACKAGE COVERS:

Removal, cleaning, inspection, painting, replacement, and installation

INITIAL SETUP:

Maintenance Level
Unit

Materials/Parts
Cleaner, lubricant, and preservative (CLP) (Item 9, WP 1132 00)

Coating compound, enamel (Red-M16A2) (Item 23, WP 1132 00)

General Safety Instructions
Do not keep live ammunition near the work area.

Only blank cartridge M200 is to be used when the blank firing attachment is attached to the weapon.

GENERAL

This work package contains information and instructions to keep auxiliary equipment used with your weapon in good repair.

REMOVAL

CAUTION

Do not use tools to tighten the blank firing attachment.
USE HANDS ONLY.

1. Unscrew slide (1) to remove from compensator (2).
2. Unhook blank firing attachment (3) from behind the first groove of compensator (2).

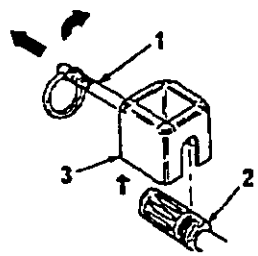

3. Screw slide (1) all the way in on blank firing attachment (3).

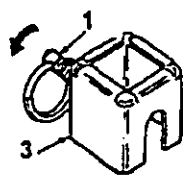

0062 00-1

FIGURE 2. Example of a task oriented work package.

Source: https://assist.dla.mil Downloaded: 2016-12-09T23:59Z
Check the source to verify that this is the current version before use.

TM 9-1005-319-23&P

BLANK FIRING ATTACHMENT (M15A2) MAINTENANCE - Continued 0062 00

CLEANING

1. Clean blank firing attachment with CLP, wipe dry, and coat with CLP.

INSPECTION

1. Inspect blank firing attachment for cracks or distortion. Be sure the parts in the slide are clear and clean. If blank firing attachment is cracked or distorted, it is unserviceable.

PAINTING

1. Repaint blank firing attachment using enamel coating compound (Red for M16A2 rifle or Yellow for M4/M4A1 carbine). Painting is the only repair authorized.

REPLACEMENT

1. Replace blank firing attachment if unserviceable.

INSTALLATION

NOTE

M23 blank firing attachment is stamped "M4 Carbine Only" painted yellow and may be used on the M4 and M4A1 carbines. M15A2 BFA is painted red and is used on the M16A2 rifle.

1. Unscrew and pull slide (1) all the way out on blank firing attachment (2).

2. Hook blank firing attachment (2) behind the first groove of the compensator (3).

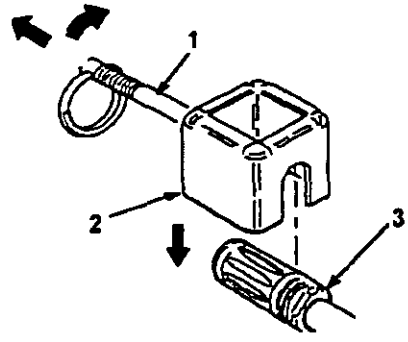

END OF TASK

0062 00-2

FIGURE 2. Example of a task oriented work package - Continued.

Source: https://assist.dla.mil -- Downloaded: 2016-12-09T23:59Z
Check the source to verify that this is the current version before use.

TM Content	-10	-12 -12&P	-13 -13&P	-14 -14&P	MIL-STD-40051 Reference	Element Name	Req'd/ Not Req'd
FRONT MATTER	R	R	R	R	1- 5.8.1	<frnt>	
Front cover	R	R	R	R	1- 5.8.1.1	<frntcover>	
Warning summary					1- 5.8.1.2	<warnsum>	R
List of effective pages / work packages					1- 5.8.1.3		NR
Revision transmittal page	R	R	R	R	1-5.8.1.4	<chgsheet>	
Title block page	R	R	R	R	1- 5.8.1.5	<titleblk>	
Table of contents	R	R	R	R	1- 5.8.1.6	<contents>	
How to use this manual					1- 5.8.1.7	<howtouse>	NR
CHAPTER 1. INTRODUCTORY INFORMATION WITH THEORY OF OPERATION	R	R	R	R	2- 5.1	<gim>	
GENERAL INFORMATION WORK PACKAGE	R	R	R	R	2- 5.1.1	<ginfowp>	
Scope	R	R	R	R	2- 5.1.1.1	<scope>	
Maintenance forms, records, and reports	R	R	R	R	2- 5.1.1.2	<mfrr>	
Reporting equipment improvement recommendations (EIR)	R	R	R	R	2- 5.1.1.3	<eir>	
Hand receipt manuals					2- 5.1.1.4	<handreceipt>	NR
Corrosion prevention and control (CPC)	R	R	R	R	2- 5.1.1.5	<cpcdata>	
Destruction of Army materiel to prevent enemy use	R	R	R	R	2- 5.1.1.6	<destructmat>	
Preparation for storage or shipment	R	R	R	R	2- 5.1.1.7	<pssref>	
Warranty information					2- 5.1.1.8	<wrntyref>	NR
Nomenclature cross-reference list					2- 5.1.1.9	<nomenreflist>	NR
List of abbreviations					2- 5.1.1.10	<loa>	R
Quality Assurance (QA) (aviation only)					2-5.1.1.11	<qainfo>	NR
Safety, care, and handling					2-5.1.1.12	<sftyinfo>	NR

FIGURE 3. Partial sample of a filled out content selection matrix for a van semitrailer -14&P TM.

Source: https://assist.dla.mil -- Downloaded: 2016-12-09T23:59Z
Check the source to verify that this is the current version before use.

TM Content	-10	-12 -12&P	-13 -13&P	-14 -14&P	MIL-STD-40051 Reference	Element Name	Req'd/ Not Req'd
Nuclear hardness					2- 5.1.1.13	<hcp>	O
Security measures for electronic data					2- 5.1.1.14	<securreqts>	NR
Calibration					2- 5.1.1.15	<calref>	NR
Copyright credit line					2- 5.1.1.19	<copyrt>	NR
EQUIPMENT DESCRIPTION AND DATA WORK PACKAGE	R	R	R	R	2- 5.1.3	<descwp>	
Equipment characteristics, capabilities, and features	R	R	R	R	2- 5.1.3.1	<eqpinfo>	
Location and description of major components	R	R	R	R	2- 5.1.3.2	<locdesc>	
Differences between models					2- 5.1.3.3	<eqpdiff>	R
Equipment data	R	R	R	R	2- 5.1.3.4	<eqpdata>	
Equipment configuration					2- 5.1.3.5	<eqpconfig>	R
THEORY OF OPERATION WORK PACKAGE	R	R	R	R	2- 5.1.4	<thrywp>	
SUPPORT DATA WORK PACKAGE FOR REPAIR PARTS, SPECIAL TOOLS, TMDE, AND SUPPORT EQUIPMENT					2- 5.1.5	<supdatawp>	R
CHAPTER X. OPERATOR INSTRUCTIONS	R	R	R	R	3- 5.1	<opim>	
DESCRIPTION AND USE OF OPERATOR CONTROLS AND INDICATORS WORK PACKAGE	R	R	R	R	3- 5.1.1	<ctrlindwp>	
OPERATION UNDER USUAL CONDITIONS WORK PACKAGE	R	R	R	R	3- 5.1.2	<opusualwp>	
Siting requirements					3- 5.1.2.2	<site>	NR
Shelter requirements					3- 5.1.2.3	<shelter>	NR
Assembly and preparation for use					3- 5.1.2.4	<assem>	R
Initial adjustments, before use, daily checks, and self-test					3- 5.1.2.5	<initial>	R
Operating procedures	R	R	R	R	3- 5.1.2.6	<oper>	R

FIGURE 3. Partial sample of a filled out content selection matrix for a van semitrailer -14&P TM - Continued.

Source: https://assist.dla.mil -- Downloaded: 2016-12-09T23:59Z
Check the source to verify that this is the current version before use.

TM Content	-10	-12 -12&P	-13 -13&P	-14 -14&P	MIL-STD-40051 Reference	Element Name	Req'd/ Not Req'd
Decals and instruction plates					3- 5.1.2.6.3	<instructplt>	R
Operating auxiliary equipment					3- 5.1.2.7	<operaux>	NR
Preparation for movement					3- 5.1.2.8	<prepmove>	R
OPERATION UNDER UNUSUAL CONDITIONS WORK PACKAGE	R	R	R	R	3- 5.1.3	<opunuwp>	
Unusual environment / weather					3- 5.1.3.2	<unusualenv>	NR
Fording and swimming					3- 5.1.3.3	<fording>	NR
Emergency procedures					3- 5.1.3.4	<emergency>	NR
Interim nuclear, biological, and chemical (NBC) decontamination procedures					3- 5.1.3.5	<decon>	NR
Jamming and electronic countermeasures (ECM) procedures					3- 5.1.3.6	<ecm>	R
CHAPTER X. TROUBLESHOOTING PROCEDURES		R	R	R	4- 5.4	<tim>	
INTRODUCTION WORK PACKAGE		R	R	R	4- 5.5.1	<introwp>	
MALFUNCTION / SYMPTOM INDEX WORK PACKAGE					4- 5.5.2	<symndxwp>	O
TROUBLESHOOTING PROCEDURES WORK PACKAGE		R	R	R	4- 5.5.3	<tswp>	
CHAPTER X. MAINTENANCE INSTRUCTIONS **NOTE** All maintenance work packages shall include a scope of task, initial setup, and all maintenance tasks applicable to the equipment.	R	R	R	R	5- 5.3	<mim>	
SERVICE UPON RECEIPT WORK PACKAGE	NR	R	R	R	5- 5.4.5.1	<surwp>	
Siting					5- 5.4.5.1.1	<siting>	NR
Shelter requirements					5- 5.4.5.1.2	<shltr>	NR
Service upon receipt of materiel					5- 5.4.5.1.3	<surmat>	R

FIGURE 3. Partial sample of a filled out content selection matrix for a van semitrailer -14&P TM - Continued.

Source: https://assist.dla.mil - Downloaded: 2016-12-09T23:59Z
Check the source to verify that this is the current version before use.

TM Content	-10	-12 -12&P	-13 -13&P	-14 -14&P	MIL-STD-40051 Reference	Element Name	Req'd/ Not Req'd
Installation instructions					5- 5.4.5.1.4	<install>	R
Preliminary servicing of equipment					5- 5.4.5.1.5	<preserv>	O
Preliminary checks and adjustment of equipment					5- 5.4.5.1.6	<prechkadj>	O
Preliminary calibration of equipment					5- 5.4.5.1.7	<precal>	NR
Circuit alignment					5- 5.4.5.1.8	<calign>	NR
Ammunition markings					5- 5.4.5.1.9	<markings>	NR
Classification of defects					5- 5.4.5.1.10	<defect>	NR
Ammunition handling					5- 5.4.5.1.11	<handling>	NR
Procedures to activate ammunition					5- 5.4.5.1.12	<arm>	NR
EQUIPMENT / USER FITTING INSTRUCTIONS WORK PACKAGE (personal use equipment)	NR				5- 5.4.5.2	<perseqpwp>	NR
PMCS, INCLUDING LUBRICATION INSTRUCTIONS, WORK PACKAGE	R	R	R	R	5- 5.4.5.3	<pmcswp>	
Introduction	R	R	R	R	5- 5.4.5.3.1	<pmcsintro>	
PMCS procedures (table)	R	R	R	R	5- 5.4.5.3.2	<pmcstable>	
MAINTENANCE WORK PACKAGES **NOTE** As applicable, the following maintenance tasks shall be presented in the general order listed below:	R	R	R	R	5- 5.4.5.8	<maintwp>	
Assembly and preparation for use (aviation only)					5- 5.4.5.8.1.3	<assem>	NR
Servicing					5- 5.4.5.8.1.4	<service>	R
Ground handling					5- 5.4.5.8.1.5	<groundtsk>	NR

FIGURE 3. Partial sample of a filled out content selection matrix for a van semitrailer -14&P TM - Continued.

Source: https://assist.dla.mil -- Downloaded: 2016-12-09T23:59Z
Check the source to verify that this is the current version before use.

```
<mim tmno="9-2350-314-10">
<ammowp level="operator" wpno= "M01567-9-2350-314">
<title>155 MM, M284 HOWITZER CANNON AMMUNITION MAINTENANCE
<wpsum><text>Care, Handling, Storage, Inspection, and Cleaning
<wpinfo>
<maintlvl level="operator">
<mtrlpart><setup-item><name><text>Cloth, wiping</name>
<itemref><xref wpid="M00479-9-2350-314"  callout="item 31">
<sftyinfo><proc><title>Care</title>
<step1><para>Ammunition is packaged to withstand conditions ordinarily encountered in the field.
Keep packing boxes from becoming broken or damaged.
<step1><para>Since ammunition is impaired by moisture, frost, extreme temperature, and foreign
matter (mud, oil, etc.), observe the following:
<step2><para>Do not break the moisture-resistant seal on the container until ammunition is to be
used.
<step2><para>Shield all ammunition from high temperatures (e.g., the direct rays of the sun).  When
covering projectiles to provide this shield, cover with tarpaulin keeping 18 in. (45.7 cm) air space
over and 6 in. (15.2 cm) of air space on sides.  This will ensure free air flow necessary to keep the
projectiles cooler in hot weather.
<step2><para>Refer tp WP 1992 00 for information regarding maintenance of the M712
Copperhead (HEAT) projectile.
<step2><para>Store M110 projectile in an upright position at all times.

<handling><proc>
<warning><para>Keep fire and flammable materials out of  the ammunition
areas.  There will be no smoking in the vicinity of ammunition.
<para>Shield all ammunition from high temperatures (e.g., direct rays of the sun).  When outside
temperature is expected to reach +100 °F (+38°C), failure to shade could result in damage to material
and loss of life.
</warning>
<step1><para>Do not expose ammunition and components containing explosives to extreme
temperatures.  Do not expose to direct sunlight, flame, or other sources of heat.
<step1><para>Do not expose unpacked propelling charges and fuzes to rain, excessive humidity, or
ground moisture.
```

EXAMPLE OF A SOURCE FILE

FIGURE 4. Sample of a SGML source file.

Source: https://assist.dla.mil - Downloaded: 2016-12-09T23:59Z
Check the source to verify that this is the current version before use.

<step1><para>Prevent rough handling of projectiles and fuzes. Do not strike projectiles together and do not off-load ammunition by dropping projectiles on top of projectiles.
<step1><para>Protect fuzes, primers, and flash reducers at all times from foreign matter and impact. A drop of 4 feet (1.20 m) may cause the electrolyte vital in a VT fuze battery to break, thus causing a dud.
<step1><para>Do not disassemble fuzes.

<storage><proc>
<title>Temperature Limits</title>
<warning><para>Ammunition exposed directly to sunlight, or in unventilated containers, enclosures, shelters, freight cars, closed vehicles, and similar structures exposed to direct sunlight may reach temperatures exceeding upper storage limits. Avoid exposure of ammunition components to direct sunlight. Do not store ammunition assembled with tetrytol-loaded bursters (i.e., projectiles, 155mm; smoke, WP, M110; gas H, and HD, persistent, M110) at temperatures exceeding +125 °F (+52°C)
</warning>
<step1><para>Except as otherwise specified, observe the following limits:
<step2><para>Lower limit is -80°F (-62°C) for a period of not more than 3 days.
<step2><para>Upper limit is +160°F (+71°C) for a period of not more than 4 hours per day.
<step1><para>Store or transport M110 projectiles containing WP at a temperature below the melting point (+111.4°F (+44°C) of the WP filler. If this is not practicable, store or transport such projectiles on their bases so that, should the WP filler melt, it will resolidify with the void in the nose of the projectile. This restriction does not apply to the M825/M825A1 WP projectile.
<step1><para>Protect proximity fuzes and proximity rounds from long exposure to high humidity. Store M728 and M732 fuzes in temperatures between -65°F to +145°F (-54°C to +63°C) and 0°F to +120°F (-18°C to +49°C) for the M514 series.

EXAMPLE OF A SOURCE FILE - Continued

FIGURE 4. Sample of a SGML source file - Continued.

Source: https://assist.dla.mil -- Downloaded: 2016-12-09T23:59Z
Check the source to verify that this is the current version before use.

TM 9-2350-314-10

155 MM, M284 HOWITZER CANNON AMMUNITION MAINTENANCE **1567 00**

THIS WORK PACKAGE COVERS:
Care, Handling, Storage, Inspection, and Cleaning

INITIAL SETUP:

Maintenance Level	**Materials/Parts**
Operator	Cloth, wiping (item 31, WP 0479 00)

CARE

1. Ammunition is packaged to withstand conditions ordinarily encountered in the field. Keep packing boxes from becoming broken or damaged.

2. Since ammunition is impaired by moisture, frost, extreme temperature, and foreign matter (mud, oil, etc.), observe the following:

   a. Do not break the moisture-resistant seal on the container until ammunition is to be used.

   b. Shield all ammunition from high temperatures (e.g., the direct rays of the sun). When covering projectiles to provide this shield, cover with tarpaulin keeping 18 in. (45.7 cm) air space over and 6 in. (15.2 cm) of air space on sides. This will ensure free air flow necessary to keep the projectiles cooler in hot weather.

   c. Refer tp WP 1992 00 for information regarding maintenance of the M712 Copperhead (HEAT) projectile.

   d. Store M110 projectile in an upright position at all times.

HANDLING

WARNING

Keep fire and flammable materials out of the ammunition areas. There will be no smoking in the vicinity of ammunition.

Shield all ammunition from high temperatures (e.g., direct rays of the sun). When outside temperature is expected to reach +100°F (+38°C), failure to shade could result in damage to material and loss of life.

1. Do not expose ammunition and components containing explosives to extreme temperatures. Do not expose to direct sunlight, flame, or other sources of heat.

2. Do not expose unpacked propelling charges and fuzes to rain, excessive humidity, or ground moisture.

1567 00-1

EXAMPLE OF FORMATTED DOCUMENT GENERATED FROM SOURCE FILE

FIGURE 4. Sample of a SGML source file - Continued.

Source: https://assist.dla.mil - Downloaded: 2016-12-09T23:59Z
Check the source to verify that this is the current version before use.

HANDLING - Continued

3. Prevent rough handling of projectiles and fuzes. Do not strike projectiles together and do not off-load ammunition by dropping projectiles on top of projectiles.

4. Protect fuzes, primers, and flash reducers at all times from foreign matter and impact. A drop of 4 feet (1.20 m) may cause the electrolyte vital in a VT fuze battery to break, thus causing a dud.

5. Do not disassemble fuzes.

STORAGE

Temperature Limits

WARNING

Ammunition exposed directly to sunlight, or in unventilated containers, enclosures, shelters, freight cars, closed vehicles, and similar structures exposed to direct sunlight may reach temperatures exceeding upper storage limits. Avoid exposure of ammunition components to direct sunlight. Do not store ammunition assembled with tetrytol-loaded bursters (i.e., projectiles, 155mm; smoke, WP, M110; gas H, and HD, persistent, M110) at temperatures exceeding +125°F (+52°C)

1. Except as otherwise specified, observe the following limits:

   a. Lower limit is -80°F (-62°C) for a period of not more than 3 days.

   b. Upper limit is +160°F (+71°C) for a period of not more than 4 hours per day.

2. Store or transport M110 projectiles containing WP at a temperature below the melting point (+111.4°F (+44°C) of the WP filler. If this is not practicable, store or transport such projectiles on their bases so that, should the WP filler melt, it will resolidify with the void in the nose of the projectile. This restriction does not apply to the M825/M825A1 WP projectile.

3. Protect proximity fuzes and proximity rounds from long exposure to high humidity. Store M728 and M732 fuzes in temperatures between -65°F to +145°F (-54°C to +63°C) and 0°F to +120°F (-18°C to +49°C) for the M514 series.

EXAMPLE OF FORMATTED DOCUMENT GENERATED FROM SOURCE FILE - Continued

FIGURE 4. Sample of a SGML source file - Continued.

Source: https://assist.dla.mil -- Downloaded: 2016-12-09T23:59Z
Check the source to verify that this is the current version before use.

Table 3. Signal Amplitude and Duration.

SIGNAL NAME	AMPLITUDE	DURATION
1. xxxxxxxxxxxxx	xxxxxxxxxxxxxx	xxxxxxxxxxxxx
2. xxxxxxxxxx[1]	xxxxxxxxxxxxxxxx xxxxxxxxxxxxxx	xxxxxx[2]

[1] xxxxxxxxxxxxxxxxxxxxxxxxxxxxxxxxxxxxxxxxxxxxxxxxxx

[2] xxxxxxxxxxxxxxxxxxxx

Tightening Metal Fasteners

When torquing a fastener, select a wrench whose range fits the required torque value. A torque wrench is most accurate from 25% to 75% of its stated range. A wrench with a stated range of 0 to 100 pound-feet (0-135 N-m) will be most accurate from 25 to 75 pound-feet (33.8-101.3 N-m). The accuracy of readings will decrease as you approach 0 pound-feet (0 N-m) or 100 pound-feet (135 N-m). The following ranges are based on this principle:

Stated Range	Most Effective Range	
0-200 lb-in. (0-22.6 N-m)	4-13 lb-ft	(5.4-17.6 N-m)
0-600 lb-ft (0-810.0 N-m)	50-450 lb-ft	(67.5-607.5 N-m)
0-170 lb-ft (0-229.5 N-m)	44-131 lb-ft	(59.4-176.9 N-m)
15-75 lb-ft (20.3-101.3 N-m)	30-60 lb-ft	(40.5-81.0 N-m)

TABULAR INFORMATION (NOT LABELLED AS A TABLE)

==========

Term	Definition
Equipment	One or more units capable of performing specified functions.
Icon	Pictorial representation; visual image to give immediate recognition of a hazard or to provide essential information.

DEFINITION LIST IN ALPHABETICAL ORDER, UNNUMBERED

FIGURE 6. Example of tabular information and lists.

Source: https://assist.dla.mil -- Downloaded: 2016-12-09T23:59Z
Check the source to verify that this is the current version before use.

Check the following for damage during shipment:

Tool Box Cabinet and Tool Kits.
Drawer Assembly.
Filing Cabinet, Security.
Rifle Mount Assembly.
Cabinet Assembly.
Shelf Assembly-wall.
Shelf Assembly-wall.
Radio.

RANDOM LIST

= = = =

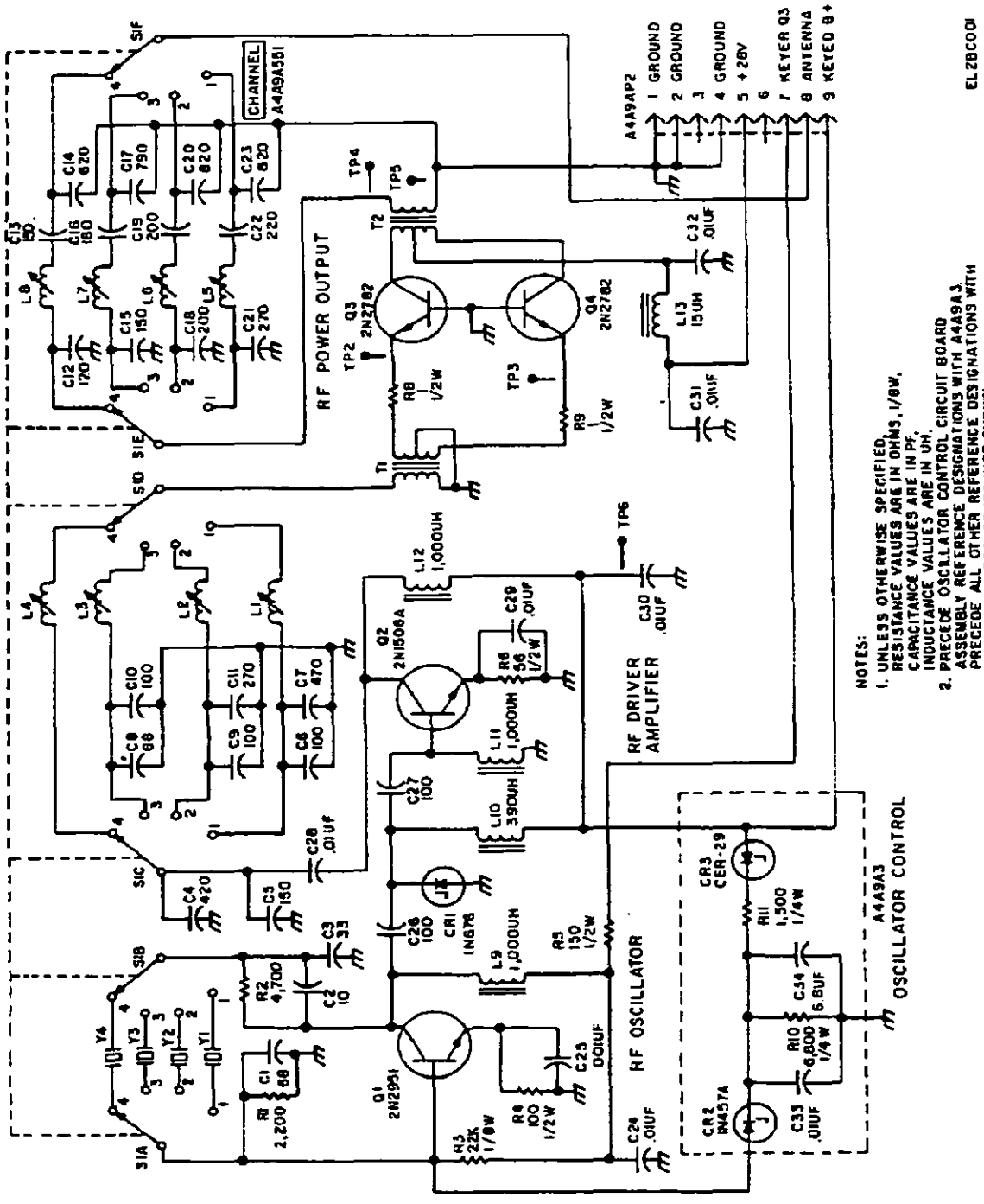

Figure 5. Schematic for Radio Frequency Oscillator.

FIGURE 7. Example of a figure rotated 90 degrees.

Source: https://assist.dla.mil -- Downloaded: 2016-12-09T23:59Z
Check the source to verify that this is the current version before use.

SAFETY WARNINGS ICONS

EAR PROTECTION - headphones over ears shows that noise level will harm ears.

ELECTRICAL - electrical wire to arm with electricity symbol running through human body shows that shock hazard is present.

ELECTRICAL - electrical wire to hand with electricity symbol running through hand shows that shock hazard is present.

FALLING PARTS - arrow bouncing off human shoulder and head shows that falling parts present a danger to life or limb.

FLYING PARTICLES - arrows bouncing off face shows that particles flying through the air will harm face.

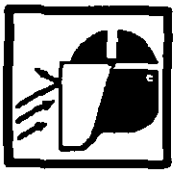

FLYING PARTICLES - arrows bouncing off face with face shield shows that particles flying through the air will harm face.

HEAVY OBJECT - human figure stooping over heavy object shows physical injury potential from improper lifting technique.

FIGURE 8. List of safety warnings icons.

Source: https://assist.dla.mil -- Downloaded: 2016-12-09T23:59Z
Check the source to verify that this is the current version before use.

SAFETY WARNINGS ICONS - Continued

HEAVY PARTS - hand with heavy object on top shows that heavy parts can crush and harm.

HEAVY PARTS - foot with heavy object on top shows that heavy parts can crush and harm.

HEAVY PARTS - heavy object on human figure shows that heavy parts present a danger to life or limb.

HEAVY PARTS - heavy object pinning human figure against wall shows that heavy, moving parts present a danger to life or limb.

HELMET PROTECTION - arrow bouncing off head with helmet shows that falling parts present a danger.

HOT AREA - hand over object radiating heat shows that part is hot and can burn.

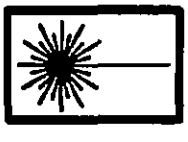

LASER LIGHT - laser light hazard symbol indicates extreme danger for eyes from laser beams and reflections.

FIGURE 8. List of safety warnings icons - Continued.

Source: https://assist.dla.mil -- Downloaded: 2016-12-09T23:59Z
Check the source to verify that this is the current version before use.

SAFETY WARNINGS ICONS - Continued

MOVING PARTS - human figure with an arm caught between gears shows that the moving parts of the equipment present a danger to life or limb.

MOVING PARTS - *hand with fingers caught between gears* shows that the moving parts of the equipment present a danger to life or limb.

MOVING PARTS - hand with fingers caught between rollers shows that the moving parts of the equipment present a danger to life or limb.

SHARP OBJECT - pointed object in hand shows that a sharp object presents a danger to limb.

SHARP OBJECT - pointed object in hand shows that a sharp object presents a danger to limb.

SHARP OBJECT - pointed object in foot shows that a sharp object presents a danger to limb.

SLICK FLOOR - wavy line on floor with legs prone shows that slick floor presents a danger for falling.

FIGURE 8. List of safety warnings icons - Continued.

Source: https://assist.dla.mil - Downloaded: 2016-12-09T23:59Z
Check the source to verify that this is the current version before use.

SAFETY WARNING

9. Secure locknut cylinder (1) to hull with with three washers (2), and bolts (3).. Using torque wrench tighten bolts to 315 - 325 lb-ft (427 - 441 N.m) torque.

WARNING

If road wheel lifter slips you could get severly injured by carrier track. *Keep feet clear of track when using* road wheel lifter.

10. Install road wheel lifter. Lower carrier and remove jack from under carrier.

HAZARDOUS MATERIAL WARNING

7. Slowly discharge pressure to 0 pig by closing shutoff valve and opening bleed valve.

WARNING

Fluorinated compond OT20 is an irritant to the eyes and skin. Use safety glasses, and latex gloves or barrier cream. Keep sparks, flames, and heat away. Keep grease off skin, eyes, and clothes.

8. Remove plug and O-ring from adapter (37) orifice. Lubricate seal (36) with fluorinated compound OT20 and install seal and relief valve (35) in adapter.

ABBREVIATED HAZARDOUS MATERIAL WARNING (THIS FORMAT MAY BE USED FOR COMMONLY USED SUBSTANCES. COMPLETE EXPLANATION OF WARNING IS PLACED IN WARNING SUMMARY.)

6. Insert plug connector kits wiring (7) and (8) and contacts/wiring (9,10, and 11) through electrical cable clamp kits (5) or (6) and appropriate capsule cable entry tube. Maintain wire twists.

WARNING

ISOPROPYL ALCOHOL, TT - I - 735

7. Isopropyl alcohol (item 5, WP 0062 00) may be used as a lubricant during insertion and removal of contacts. Apply isopropyl alcohol by brushing on capsule insert or by dipping contact or tool.

FIGURE 9. Example of placement of warning icons in a procedure.

Source: https://assist.dla.mil -- Downloaded: 2016-12-09T23:59Z
Check the source to verify that this is the current version before use.

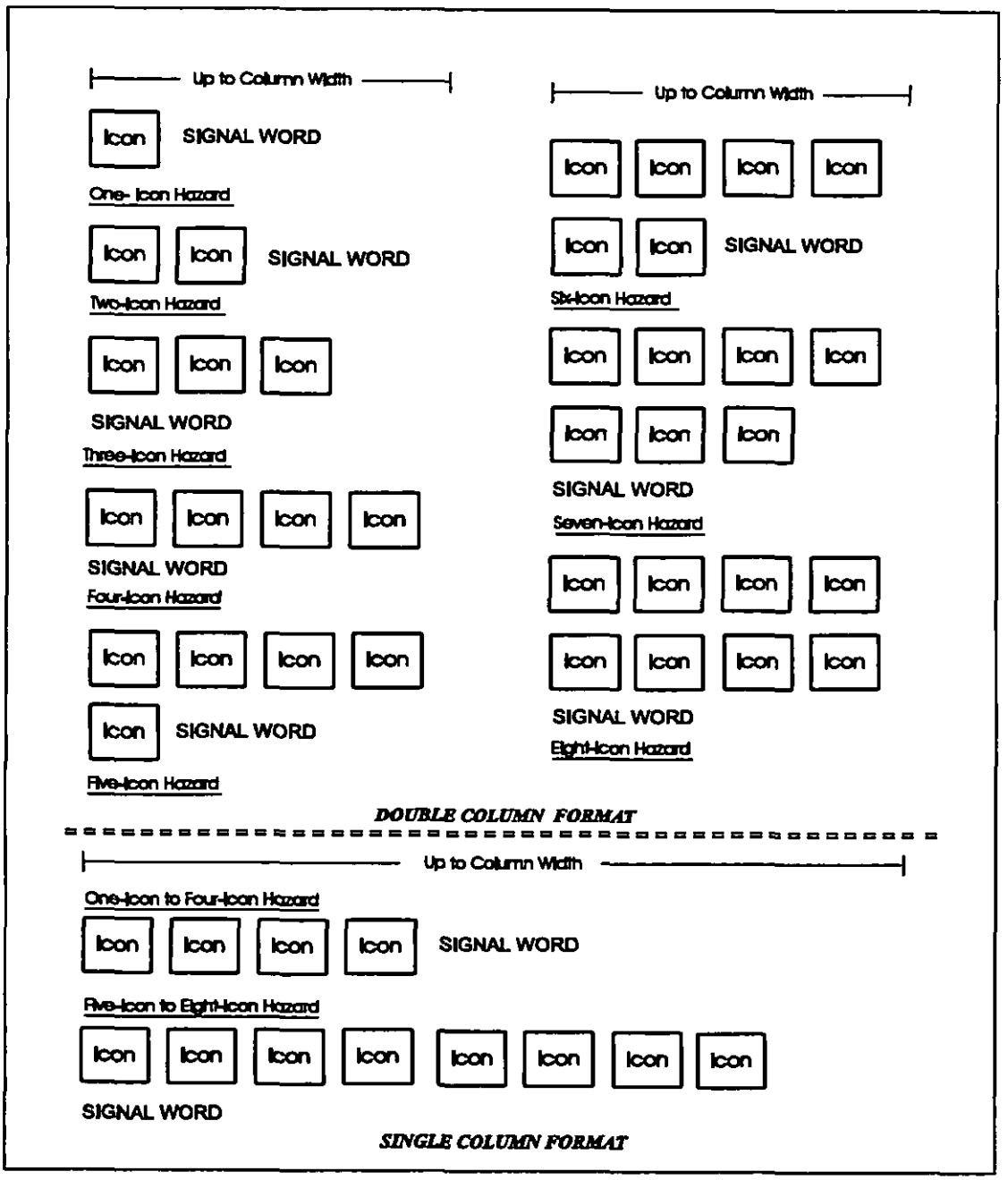

FIGURE 9. Example of placement of warning icons in a procedure - Continued.

Source: https://assist.dla.mil - Downloaded: 2016-12-09T23:59Z
Check the source to verify that this is the current version before use.

WARNING SUMMARY

This warning summary contains general safety warnings and hazardous materials warnings that must be understood and applied during operation and maintenance of this equipment. Failure to observe these precautions could result in serious injury or death to personnel. Also included are explanations of safety and hazardous materials icons used within the technical manual.

EXPLANATION OF SAFETY WARNING ICONS

ELECTRICAL - electrical wire to hand with electricity symbol running through hand shows that shock hazard is present.

HEAVY OBJECT - human figure stooping over heavy object shows physical injury potential from improper lifting technique.

GENERAL SAFETY WARNINGS DESCRIPTION

WARNING

Whenever possible shut off system power before beginning work on equipment.

Do not come in contact with electrical connectors.

Don't be misled by low voltage. Low potentials can be dangerous.

Do not work on electrical equipment alone. Be sure another person is nearby who can give first aid.

WARNING

Some objects covered in this manual are heavy and need two soldiers to lift them.

EXPLANATION OF HAZARDOUS MATERIALS WARNING ICONS

CHEMICAL - drops of liquid on hand shows that the material will cause burns or irritation to human skin or tissue.

FIGURE 10. Example of warning icons in a warning summary.

Source: https://assist.dla.mil -- Downloaded: 2016-12-09T23:59Z
Check the source to verify that this is the current version before use.

EXPLANATION OF HAZARDOUS MATERIALS WARNING ICONS - Continued

VAPOR - human figure in a cloud shows that material vapors present a danger to life or health.

FIRE - flame shows that a material may ignite and cause burns.

EYE PROTECTION - person with goggles shows that the material will injure the eyes.

HAZARDOUS MATERIALS DESCRIPTION

WARNING

DRYCLEANING SOLVENT P-D-680

P-D-680 solvent vapors are toxic. Avoid prolonged or repeated breathing of vapors or solvent contact with skin. Use only with adequate ventilation. Solvent is flammable and should not be used near open flame. Fire extinguishers should be readily available when solvent is used.

FIGURE 10. Example of warning icons in a warning summary - Continued.

Source: https://assist.dla.mil -- Downloaded: 2016-12-09T23:59Z
Check the source to verify that this is the current version before use.

HAZARDOUS MATERIALS WARNINGS ICONS

BIOLOGICAL - abstract symbol bug shows that a material may contain bacteria or viruses that present a danger to life or health.

CHEMICAL - drops of liquid on hand shows that the material will cause burns or irritation to human skin or tissue.

CRYOGENIC - hand in block of ice shows that the material is extremely cold and can injure human skin or tissue.

EXPLOSION - rapidly expanding symbol shows that the material may explode if subjected to high temperatures, sources of ignition or high pressure.

EYE PROTECTION - person with goggles shows that the material will injure the eyes.

FIRE - flame shows that a material may ignite and cause burns.

FIGURE 11. List of hazardous materials warnings icons.

Source: https://assist.dla.mil -- Downloaded: 2016-12-09T23:59Z
Check the source to verify that this is the current version before use.

HAZARDOUS MATERIALS WARNINGS ICONS - Continued

POISON - skull and crossbones shows that a material is poisonous or is a danger to life.

RADIATION - three circular wedges shows that the material emits radioactive energy and can injure human tissue.

VAPOR - human figure in a cloud shows that material vapors present a danger to life or health.

FIGURE 11. List of hazardous materials warnings icons - Continued.

Source: https://assist.dla.mil -- Downloaded: 2016-12-09T23:59Z
Check the source to verify that this is the current version before use.

TORQUE LIMITS

How To Use Torque Tables

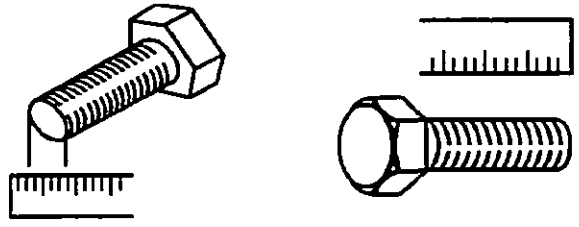

1. Measure the diameter of the screw you are installing.
2. Count the number of threads per inch or use a pitch grade.
3. Under the heading SIZE, look down the left-hand column until you find the diameter of the screw you are installing. (There will usually be two lines beginning with the same size.)
4. In the second column under SIZE, find the number of threads per inch that matches the number of threads you counted in step 2. (Not required for metric screws.)

INCORRECT

= = = =

REMOVAL

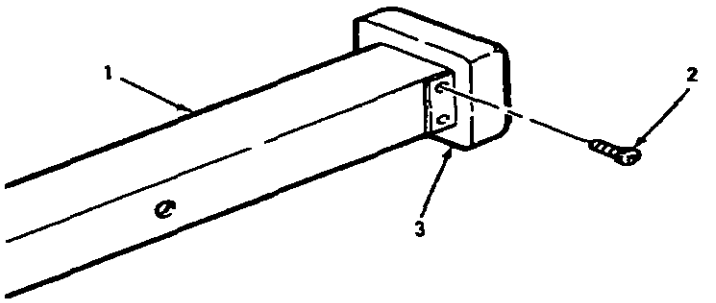

1. Remove four screws (2) securing end guard (3) to beam (1).
2. Remove end guard (3) and discard.

"ABOVE" PLACEMENT OPTION

==========

INSTALLATION

1. Install end guard (3) over beam (1) and align screw holes.
2. Install screws (2).

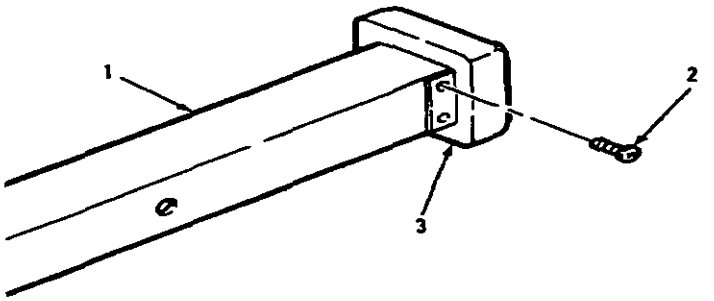

"BELOW" PLACEMENT OPTION

FIGURE 13. Example of digital illustration placement.

Source: https://assist.dla.mil -- Downloaded: 2016-12-09T23:59Z
Check the source to verify that this is the current version before use.

REMOVAL

1. Remove four screws (2) securing end guard (3) to beam (1).

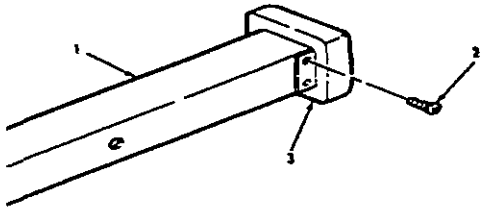

2. Remove end guard (3) and discard.

"IMMEDIATE" (DEFAULT) PLACEMENT OPTION

==========

TM 9-2330-385-14

WHEEL/TIRE REPLACEMENT 0055 00

REMOVAL - Continued

7. xxxxx xxxxx xxxxx xxxxx xxxxx xxxxx xxxxx xxxxx xxxxx xxxxx xxxxx xxxxx xxxxx xxxxx xxxxx xxxxx xxxxx (reference to Float option) xxxxx xxxxx xxxxx xxxxx xxxxx xxxxx xxxxx xxxxx xxxxx xxxxx xxxxx xxxxx xxxxx xxxxx.

8. xxxxx xxxxx xxxxx xxxxx xxxxx xxxxx xxxxx xxxxx xxxxx xxxxx xxxxx xxxxx xxxxx xxxxx xxxxx.

9. xxxxx.

10. xxxxx.

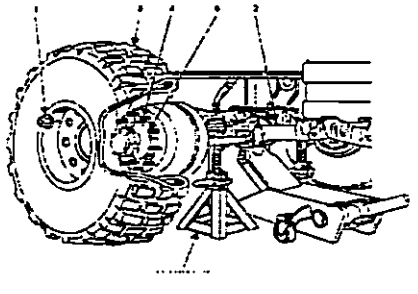

0055 00-2

"FLOAT" PLACEMENT OPTION

FIGURE 13. Examples of digital illustration placement - Continued.

Source: https://assist.dla.mil -- Downloaded: 2016-12-09T23:59Z
Check the source to verify that this is the current version before use.

Similarly, the mass leaving the shock front is:

$$m_1 = p_1 V_1$$

$$m_1 = p_1 A L_1$$

$$m_1 = p_1 A t\ (v - u_1) \qquad \text{EQ 10}$$

Invoking the principle of conservation of mass:

$$m_o = m_1$$

$$p_o A t (v - u_o) = p_1 A t\ (v - u_1)$$

$$p_o (v - u_o) = p_1 (v - u_1) \qquad \text{EQ 11}$$

EXAMPLE A

==========

Equating the work done on the system with the rate of energy increase and cancelling the *t*'s:

$$p_1 u_1 A - p_o u_o A =$$
$$A p_1 (v - u_1)(e_1 - 0.5 u_1^2) - A p_o (v - u_o)(e_o + 0.5_o 2)$$

EXAMPLE B

==========

Cylinder Expansion Test

An important problem faced by the designer of fragmentation warheads is that he must maximize the energy which is transferred from explosive to metal during the detonation. The most frequently encountered configuration is that of an explosive-filled metal cylinder detonated by a wave moving axially. The best scaling law that has been devised for this condition is that of Gurney, who disregarded detonation conditions and shock effects in the metal and assumed implicity that all the energy of the explosive is conserved. His equation for the cylinders is:

$$v = \sqrt{2E\left(\frac{C/M}{1 + 0.5\ C/M}\right)}$$

where *v* is the velocity to which the metal is accelerated by the explosive, *E* is unit energy content of the explosive, *C* is the weight of the explosive, and *M* is the metal weight. This expression of velocity in terms of *C/M* implies that weight-ratio scaling of explosive and metal is of prime importance and that dimensional scaling need not be considered at all. The term *2 E* has the dimensions of a velocity as was pointed out by Gurney in his original report.

EXAMPLE C

FIGURE 14. Examples of equations.

Source: https://assist.dla.mil- Downloaded: 2016-12-09T23:59Z
Check the source to verify that this is the current version before use.

Recovery can be accomplished by adding dilute acetic acid, but the product obtained will be impure. The heat of formation at constant pressure is -112 to -126.3 kilocalories per mole. The calculated heat of detonation is 0.367 kilocalories per gram. Lead azide is used extensively as an ingredient in initiating compositions.

$$[N{=}N{=}N]{-}Pb^{++}[N{=}N{=}N{=}]{-}$$

EXAMPLE D

==========

In the manufacturing process ethyl nitrate ($C_2H_5.ONO_2$), ethyl nitrite ($C_2H_5.ONO$), and nitroethane ($C_2H_5NO_2$) also are produced. The intermediate products of oxidation and nitration involved in the preparation of mercury fulminate are as follows:

$CH_3.CH_2OH \rightarrow CH_3.CHO \rightarrow$
Ethanol Acetaldehyde

EXAMPLE E

==========

Two equations are given for the specific heat of PETN as a function of temperature:

$$C = 0.257+(5.21 \times 10^4)T \text{ for } T \leq 140°C$$
$$\text{and} \quad C = 0.239+(8.0\times10^4)T \text{ for } 32°C<T<127°C$$

EXAMPLE F

==========

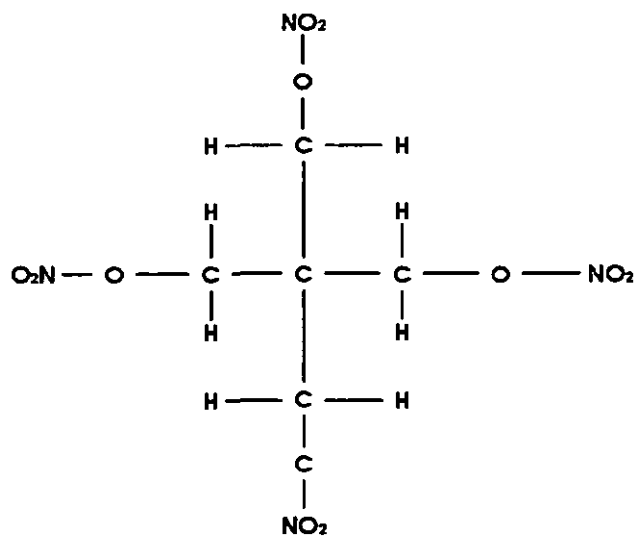

EXAMPLE G

FIGURE 14. Examples of equations - Continued.

Source: https://assist.dla.mil -- Downloaded: 2016-12-09T23:59Z
Check the source to verify that this is the current version before use.

In a given amount of time, t, mass moves from one side of the shock front to the other side. By definiton, mass, m, is given as a function of density, p, and volume, V, by the equation:

$$m=pV \qquad \text{EQ 1}$$

The volume, V, can be expressed in terms of area, A, and length, L, by the equation:

$$V=AL \qquad \text{EQ 2}$$

The length, L, is the distance a particle travels in our assumed time interval, t, times the velocity, v:

$$L=tv \qquad \text{EQ 3}$$

By figure 3 the velocity can be seen to equal:

$$v_o = (v-u_o) \qquad \text{EQ 4}$$

and

$$v_1 = (v-u_1) \qquad \text{EQ 5}$$

==========

By equations 1 through 5:

momentum change/t = $[p_1Atu_1\ (v-u_1)-p_oAtu_o\ (v-u_o)]\ /t$

EQ 9

FIGURE 15. Examples of numbering equations.

Source: https://assist.dla.mil - Downloaded: 2016-12-09T23:59Z
Check the source to verify that this is the current version before use.

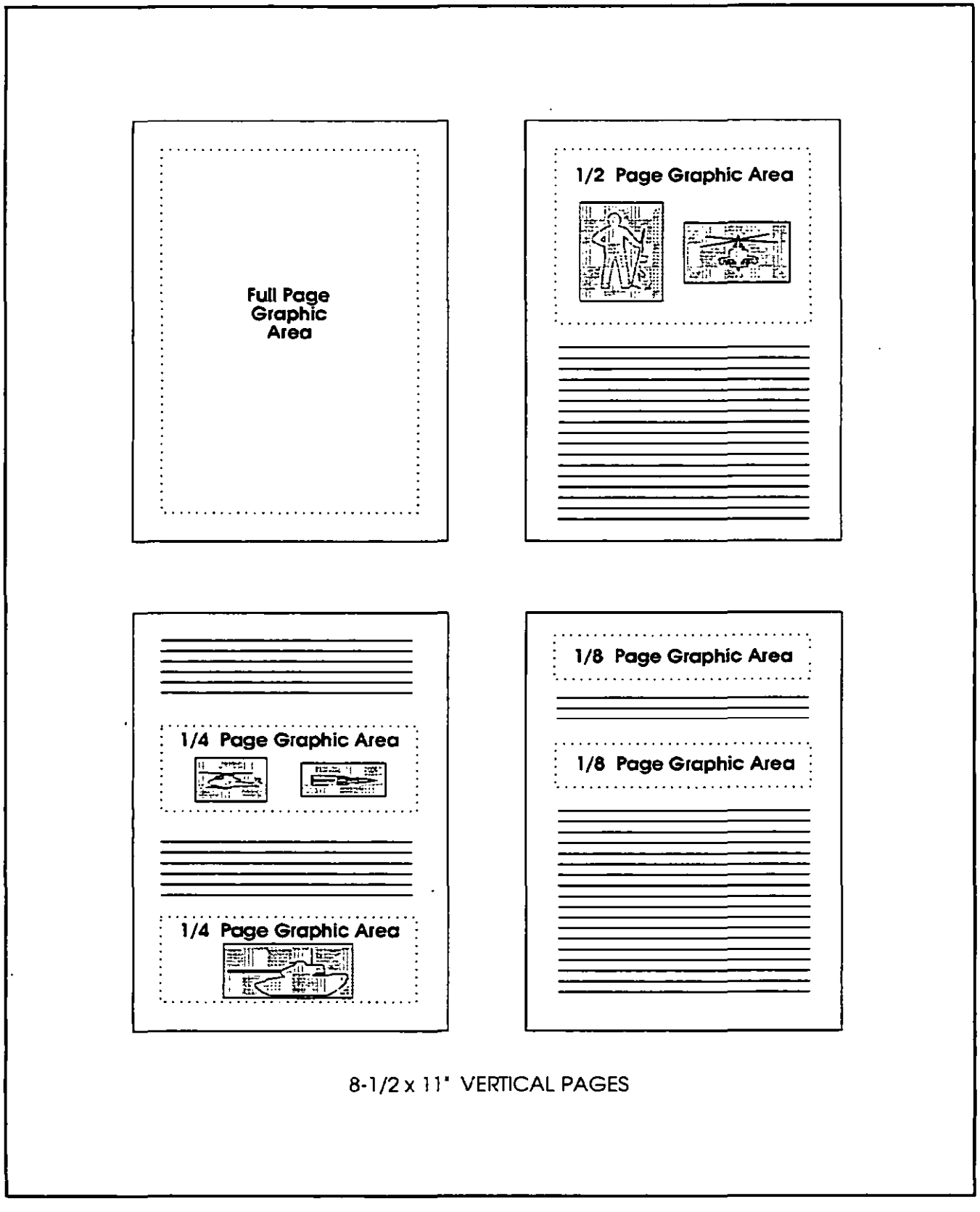

FIGURE 16. Examples of size options allowed for graphics.

Source: https://assist.dla.mil -- Downloaded: 2016-12-09T23:59Z
Check the source to verify that this is the current version before use.

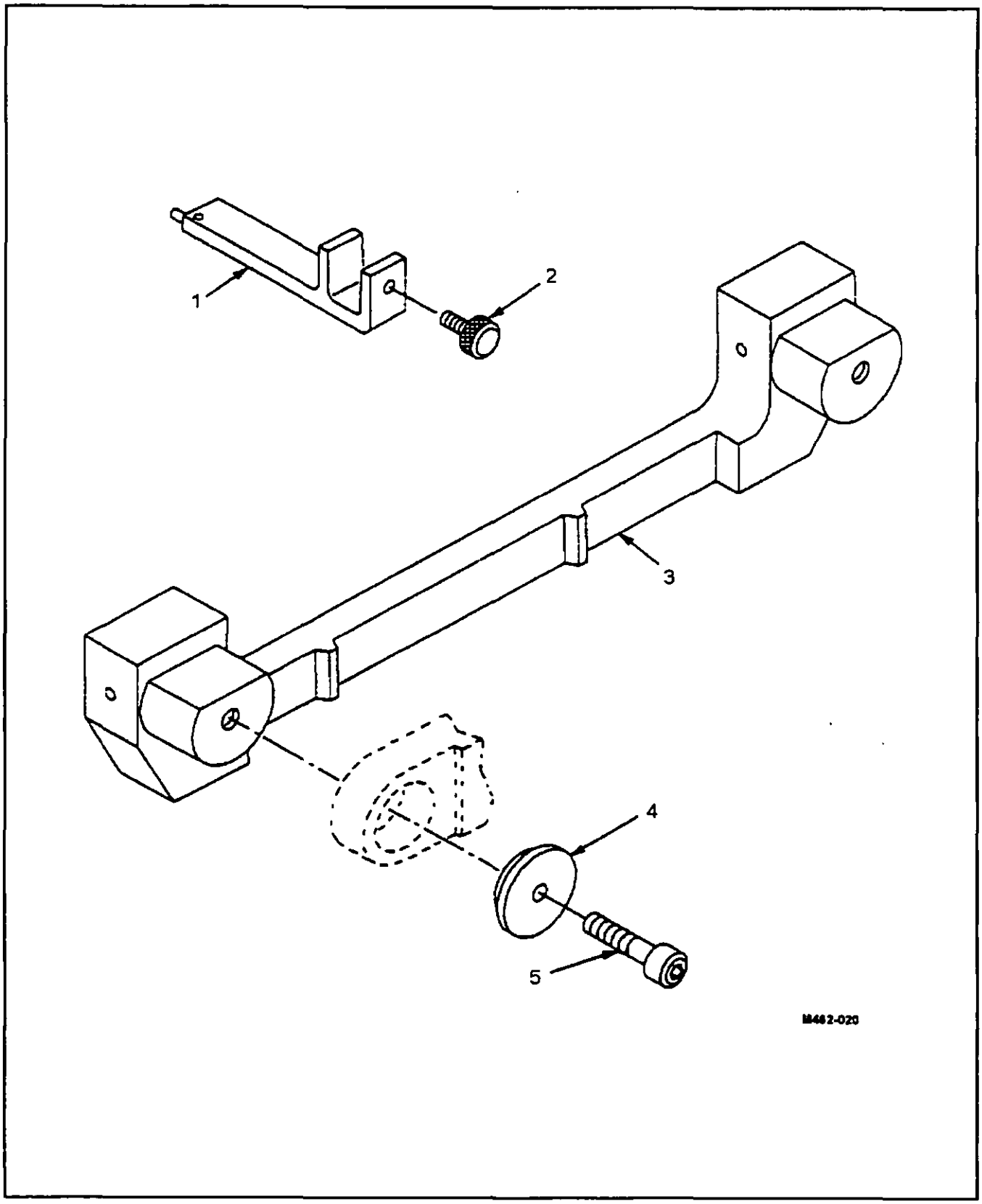

FIGURE 17. Example of items in phantom, callouts, and illustration identification.

Source: https://assist.dla.mil Downloaded: 2016-12-09T23:59Z
Check the source to verify that this is the current version before use.

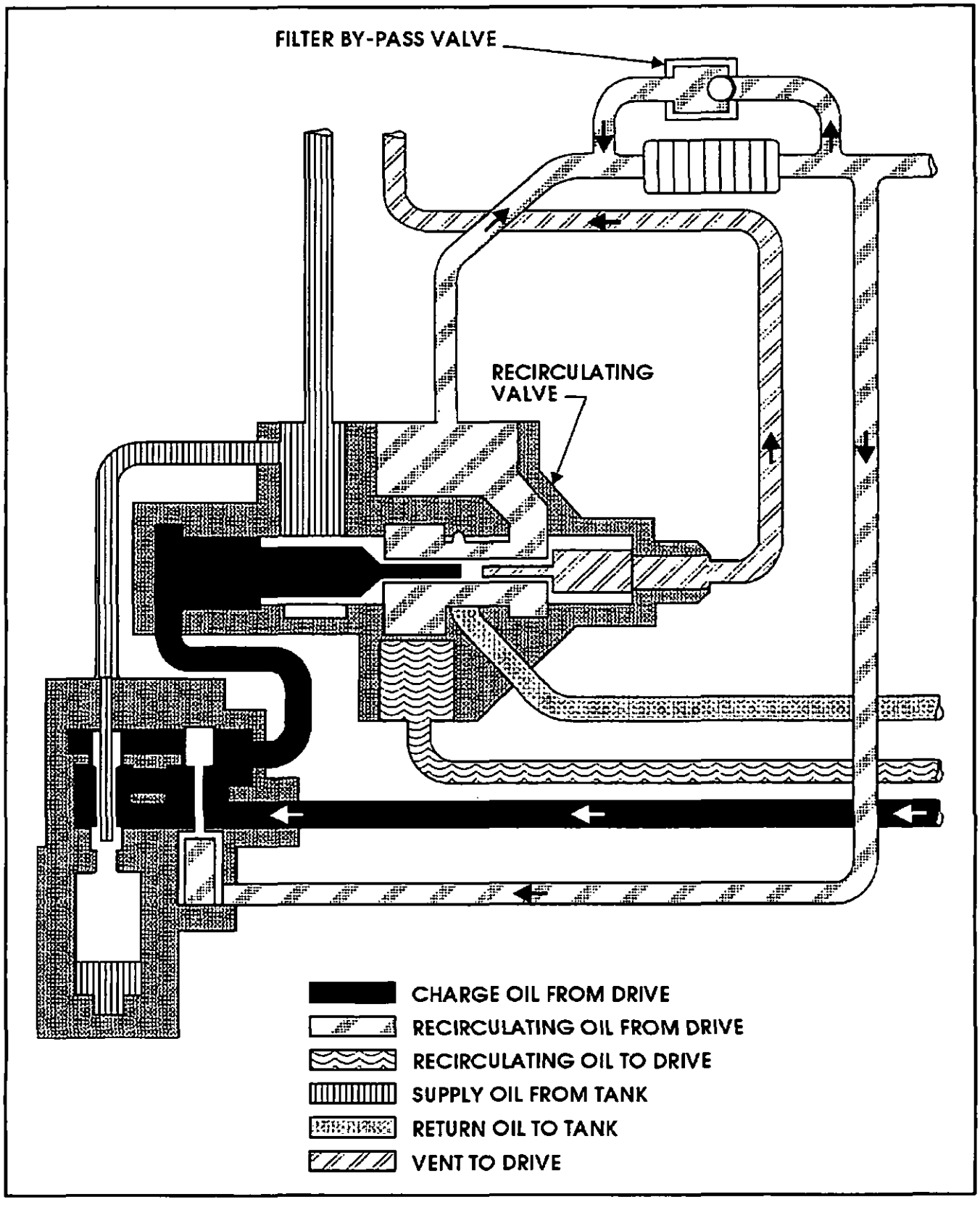

FIGURE 18. Example of use of patterns instead of colors.

Source: https://assist.dla.mil -- Downloaded: 2016-12-09T23:59Z
Check the source to verify that this is the current version before use.

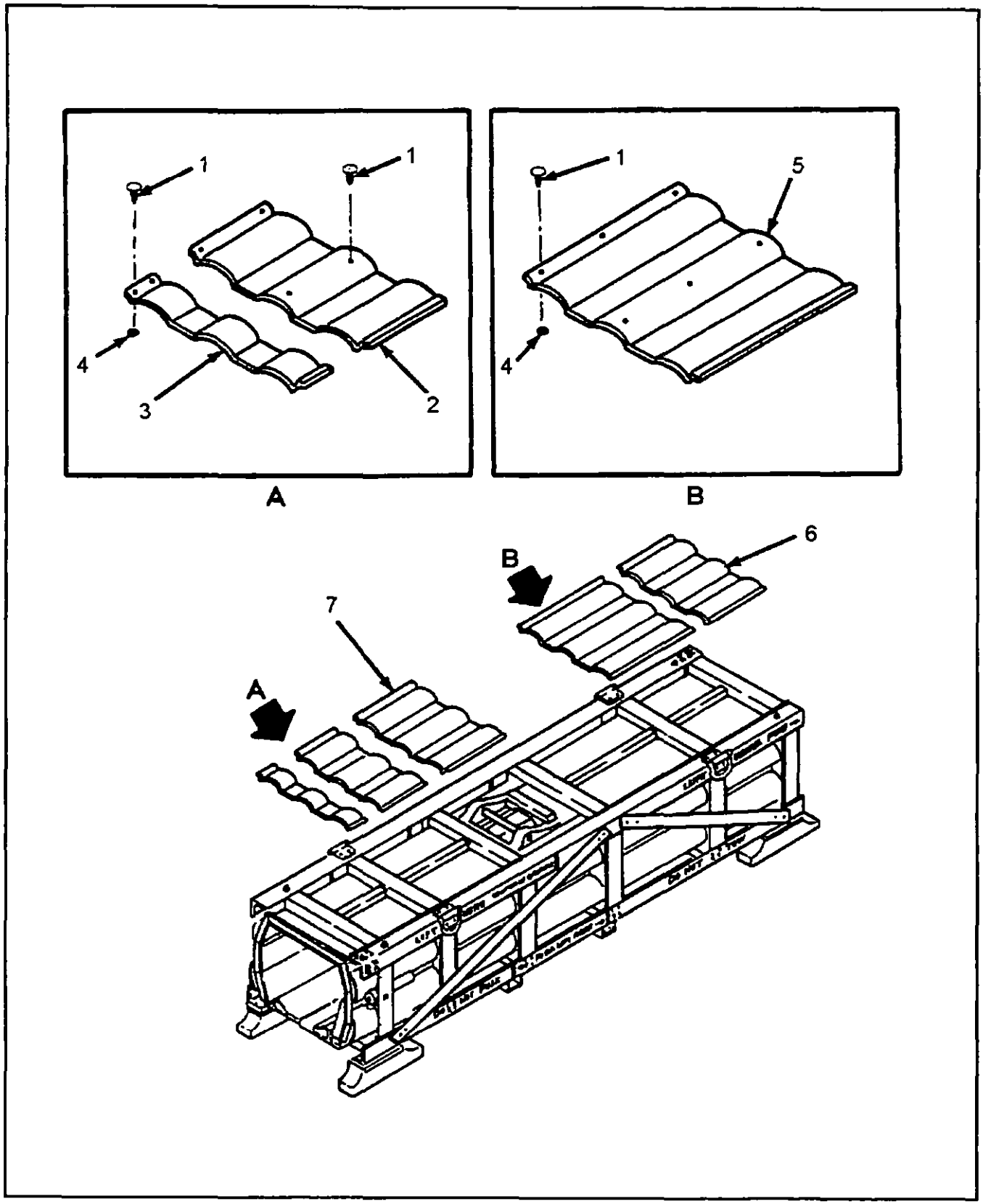

FIGURE 19. Example of a multisection illustration with border rules.

Source: https://assist.dla.mil Downloaded: 2016-12-09T23:59Z
Check the source to verify that this is the current version before use.

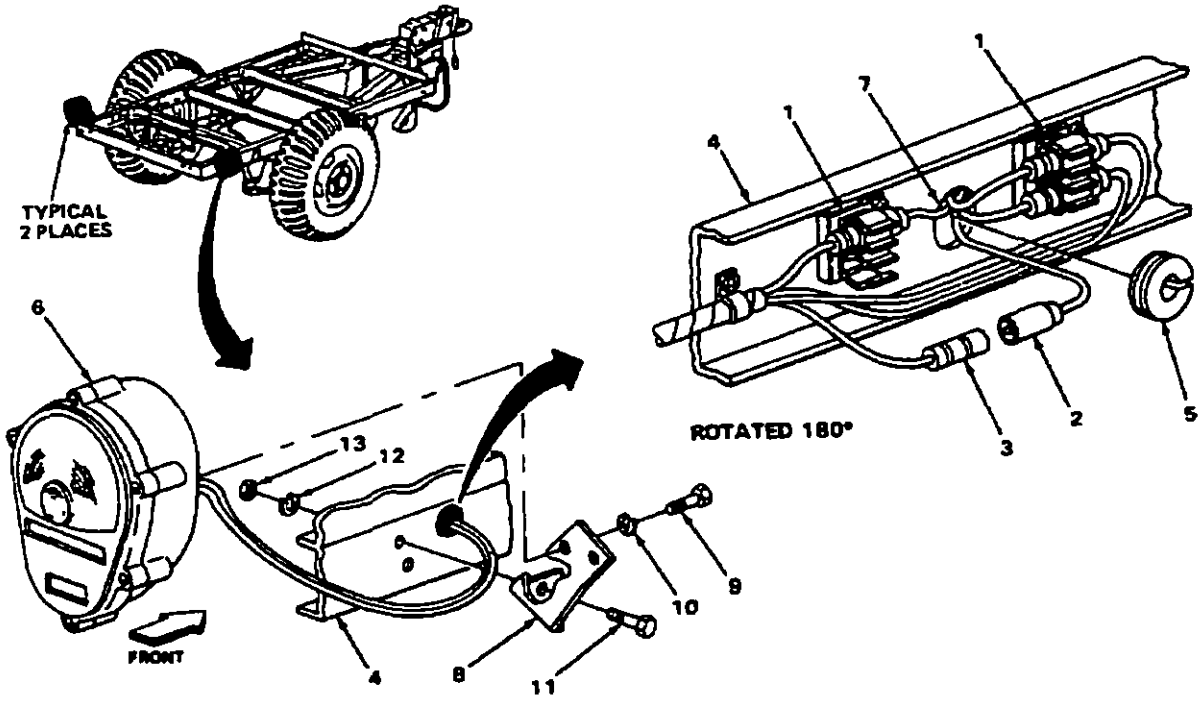

FIGURE 20. Example of a multiview illustration.

Source: https://assist.dla.mil -- Downloaded: 2016-12-09T23:59Z
Check the source to verify that this is the current version before use.

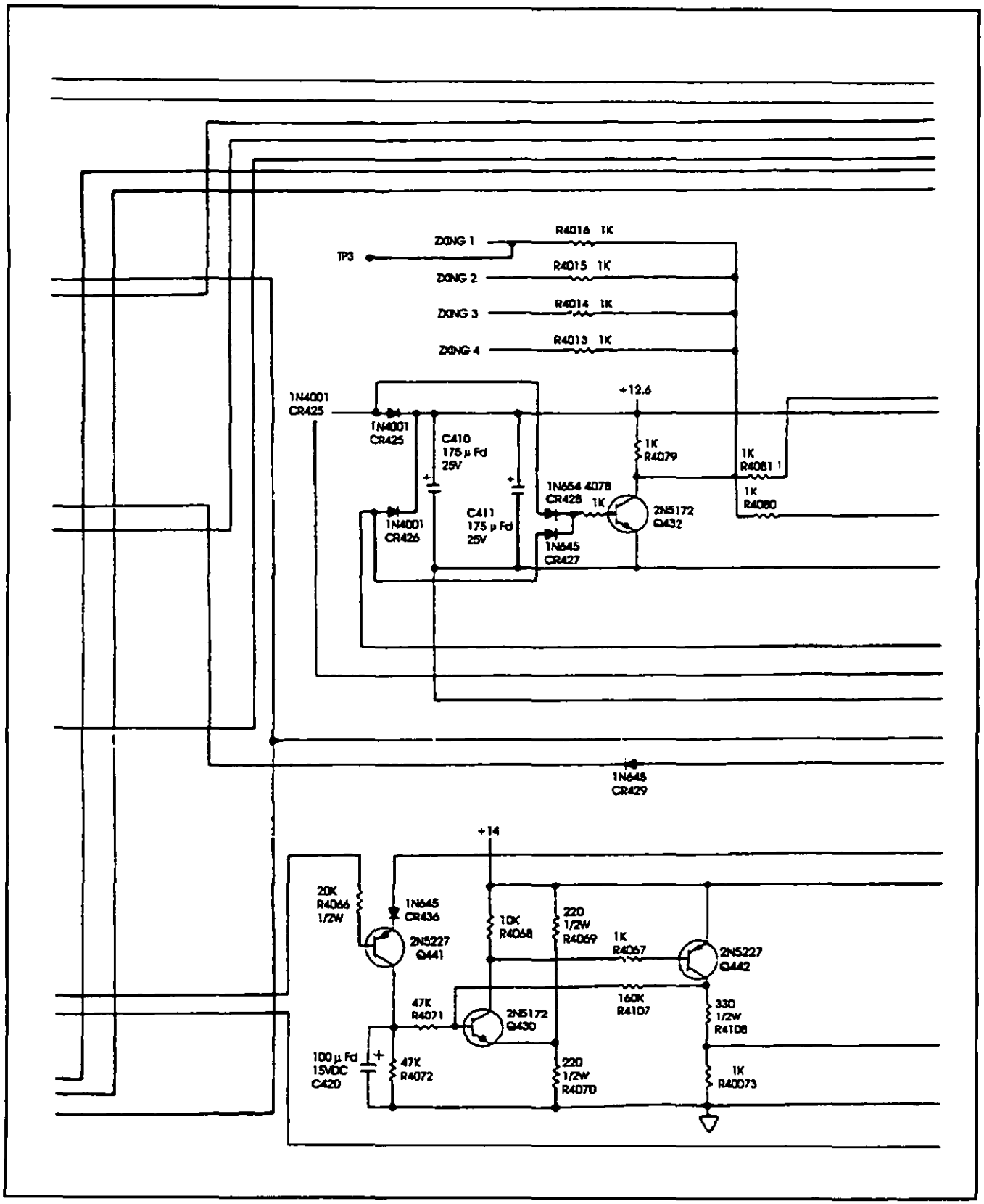

FIGURE 21. Example of page size multisheet continuous flow diagram.

Source: https://assist.dla.mil Downloaded: 2016-12-09T23:59Z
Check the source to verify that this is the current version before use.

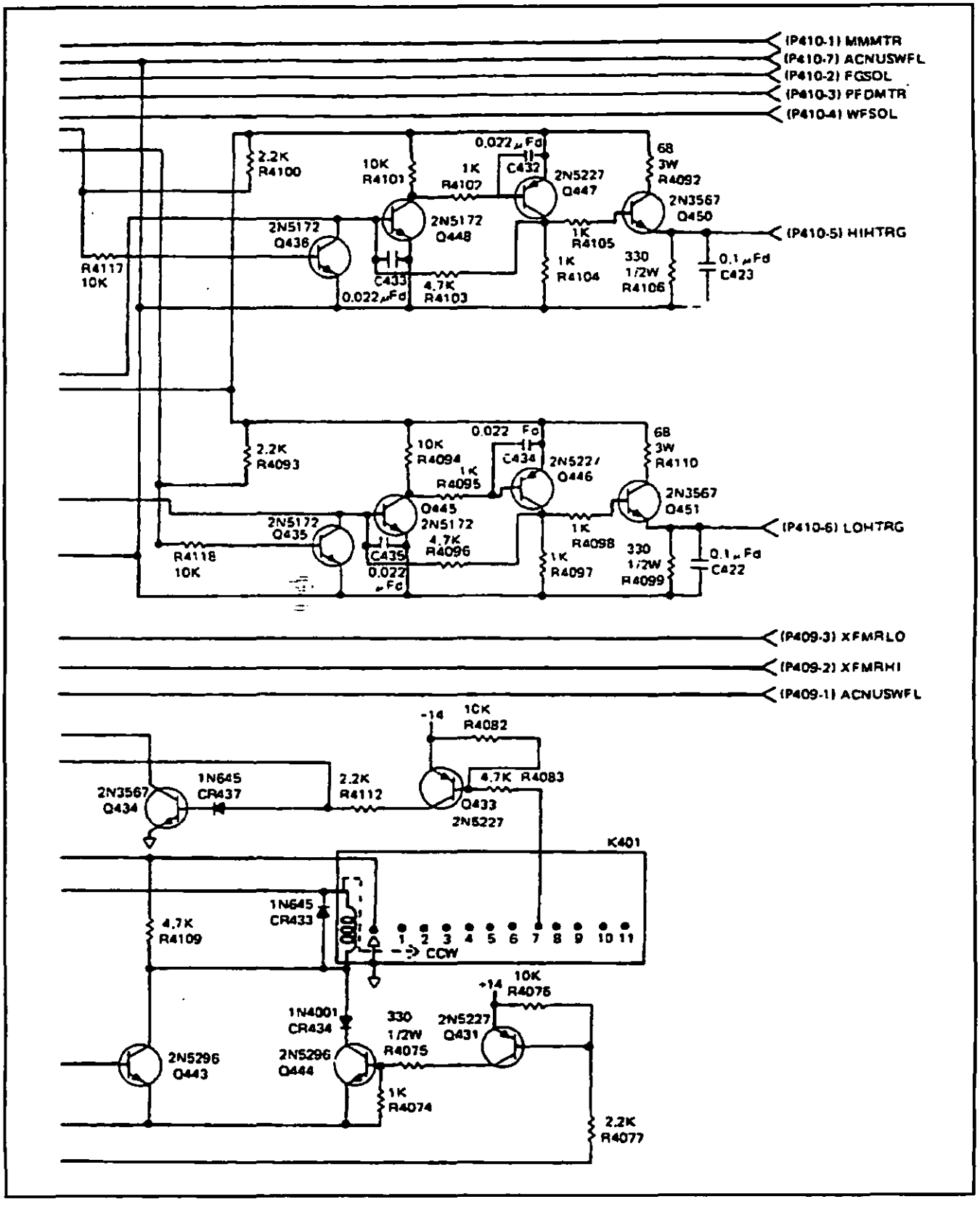

FIGURE 21. Example of page size multisheet continuous flow diagram - Continued.

Source: https://assist.dla.mil -- Downloaded: 2016-12-09T23:59Z
Check the source to verify that this is the current version before use.

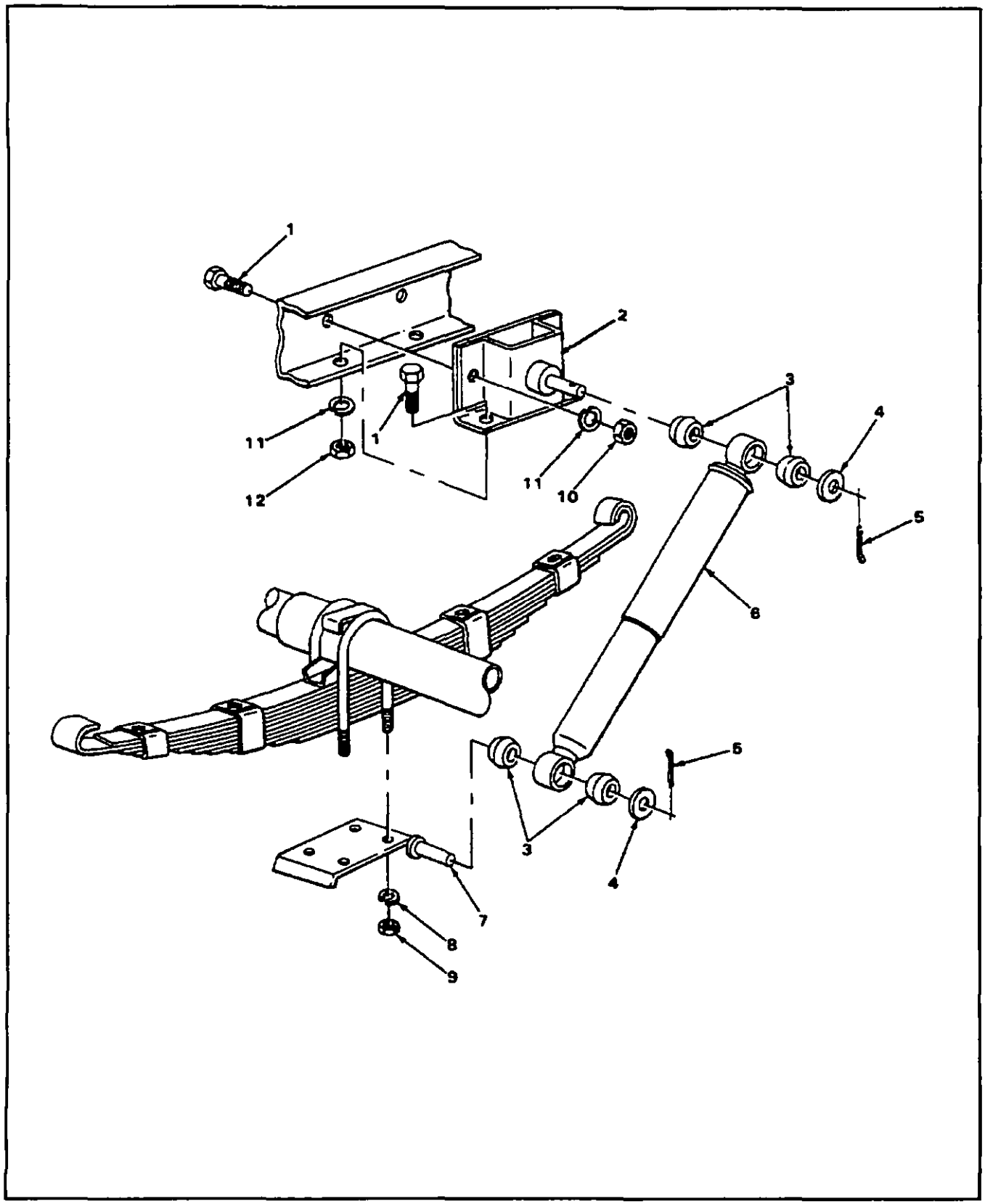

FIGURE 22. Example of an exploded view illustration.

Source: https://assist.dla.mil Downloaded: 2016-12-09T23:59Z
Check the source to verify that this is the current version before use.

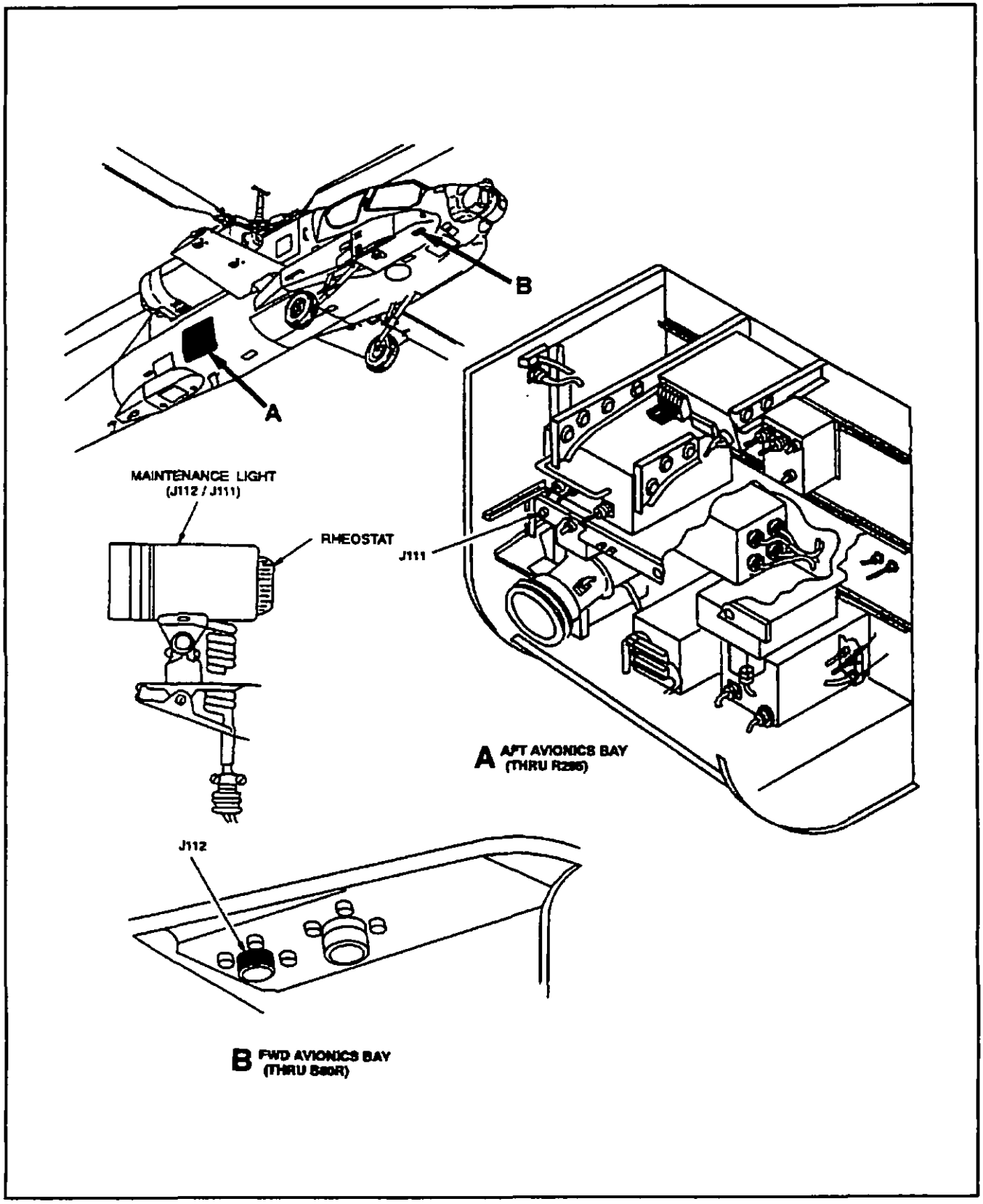

FIGURE 23. Example of a locator illustration and detail view.

Source: https://assist.dla.mil -- Downloaded: 2016-12-09T23:59Z
Check the source to verify that this is the current version before use.

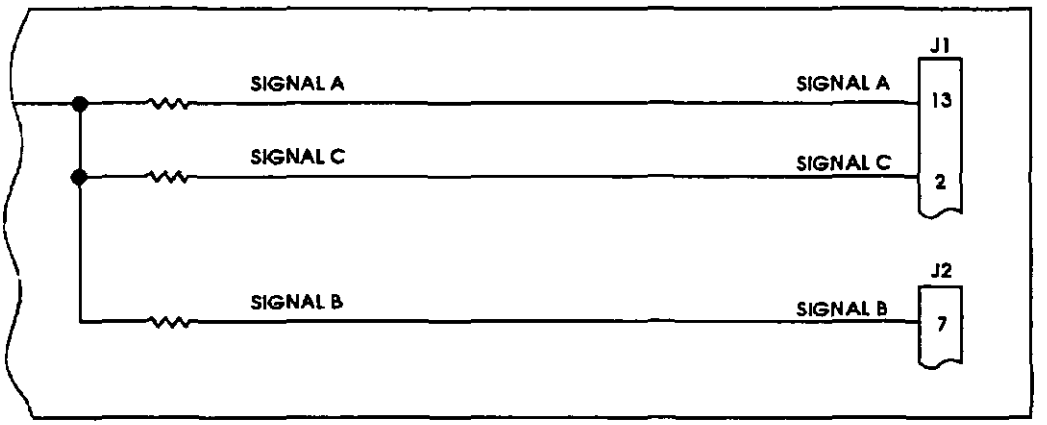

POINT-TO-POINT METHOD FOR SIGNAL FLOW

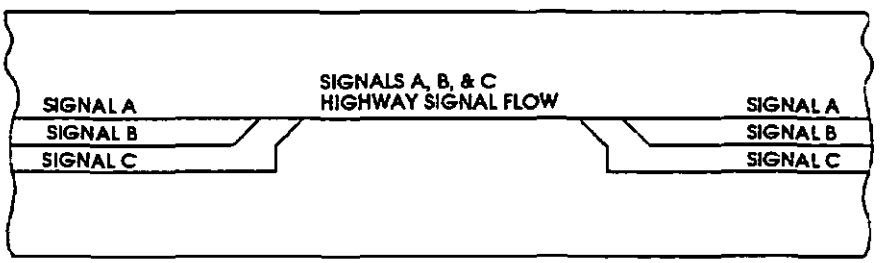

HIGHWAY METHOD FOR SIGNAL FLOW

FIGURE 24. Example of highway and point-to-point methods for signal flow.

Source: https://assist.dla.mil -- Downloaded: 2016-12-09T23:59Z
Check the source to verify that this is the current version before use.

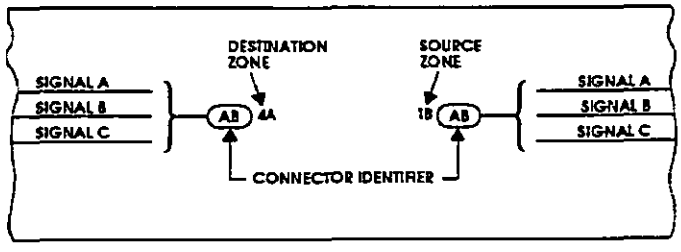

OVAL CONNECTORS USED TO CONTINUE SIGNALS

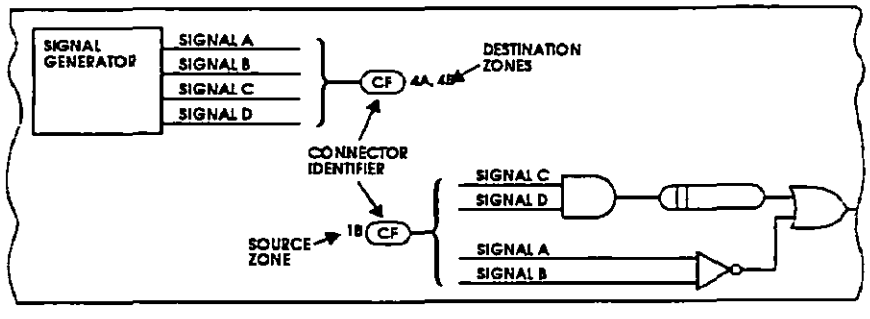

OVAL CONNECTORS USED TO CONTINUE SIGNALS TO MORE THAN ONE DESTINATION

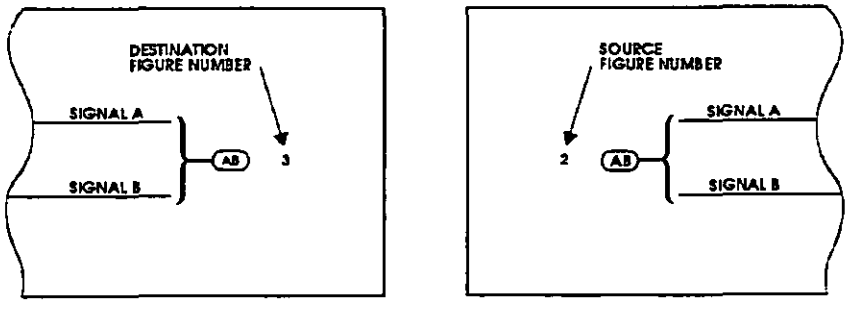

OVAL CONNECTORS USED TO CONTINUE SIGNALS BETWEEN DIAGRAMS

FIGURE 25. Example of oval connectors to continue signals.

Source: https://assist.dla.mil -- Downloaded: 2016-12-09T23:59Z
Check the source to verify that this is the current version before use.

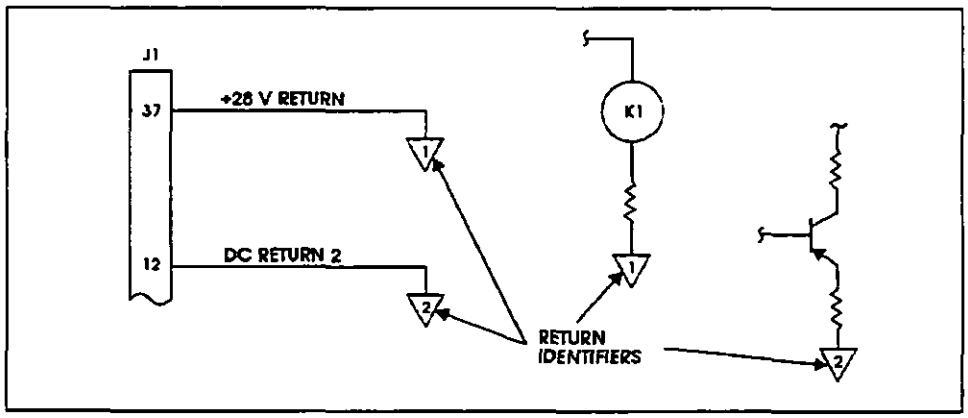

SIGNAL RETURNS USED TO CONTINUE SIGNAL

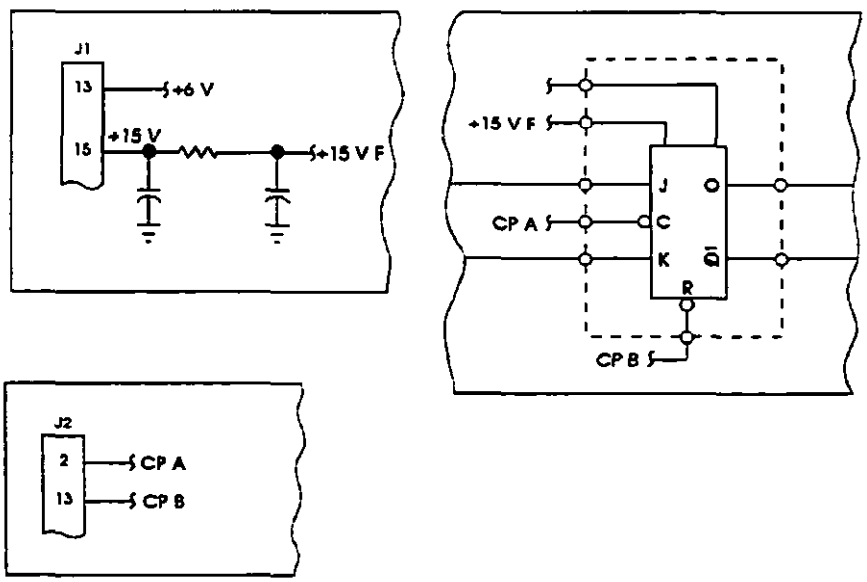

BREAKOFF SYMBOLS USED TO CONTINUE SIGNALS

FIGURE 26. Example of signal returns and breakoff symbols to continue signals - single sheet diagram.

Source: https://assist.dla.mil Downloaded: 2016-12-09T23:59Z
Check the source to verify that this is the current version before use.

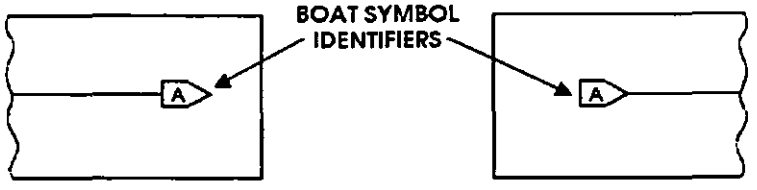

BOAT SYMBOLS USED TO CONTINUE SIGNALS BETWEEN ADJACENT SHEETS OF A DIAGRAM

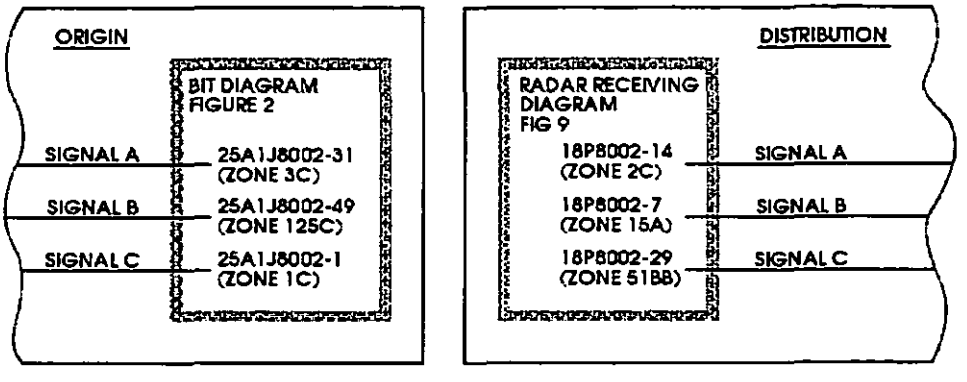

BLOCK TECHNIQUE FOR CONTINUING SIGNALS BETWEEN DIAGRAMS

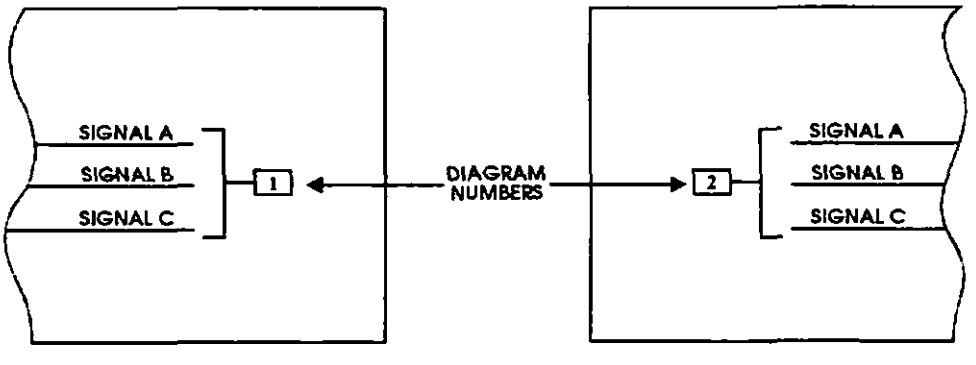

PYRAMID DIAGRAMS INTERDIAGRAM SIGNAL CONTINUATION

FIGURE 27. Example of boat symbols, block technique, pyramid method to continue signals - multisheet diagram.

Source: https://assist.dla.mil -- Downloaded: 2016-12-09T23:59Z
Check the source to verify that this is the current version before use.

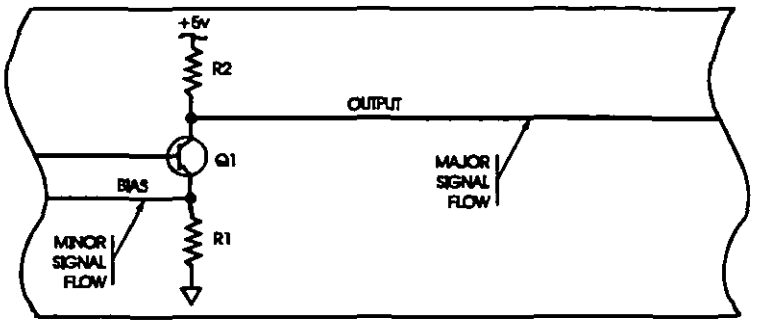

LINE WIDTH CODE USED TO INDICATE SIGNAL IMPORTANCE

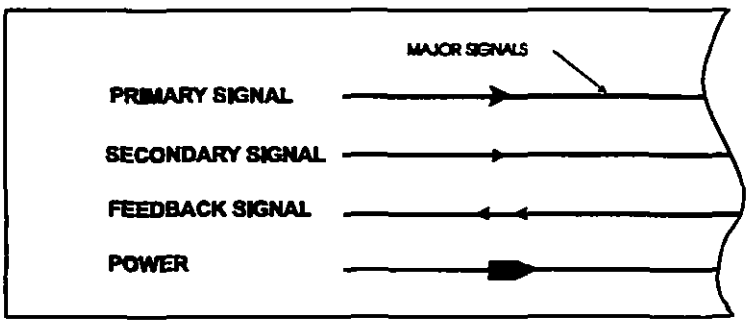

ARROWHEADS USED TO INDICATE SIGNAL TYPES

FIGURE 28. Example of signal difference techniques.

Source: https://assist.dla.mil -- Downloaded: 2016-12-09T23:59Z
Check the source to verify that this is the current version before use.

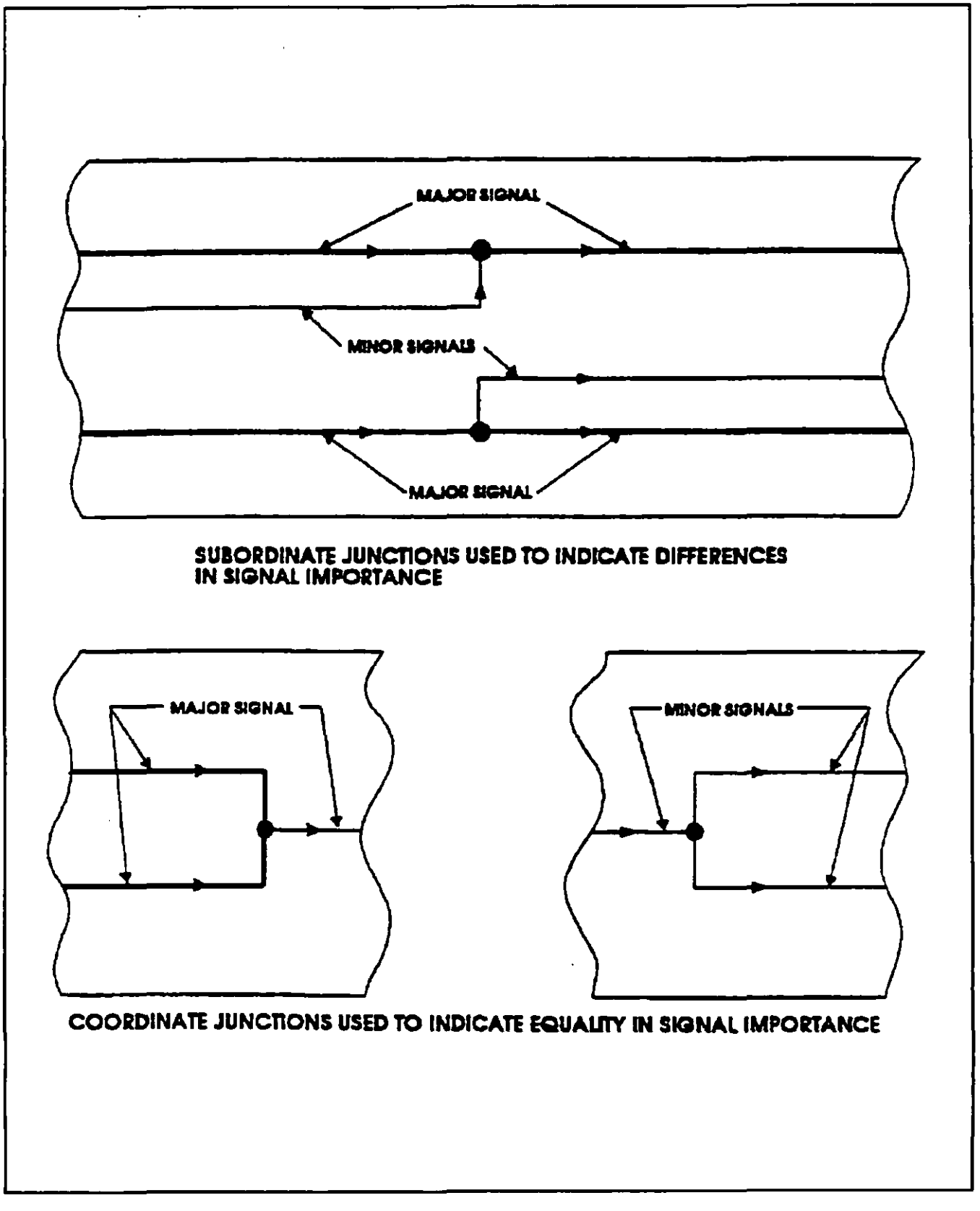

FIGURE 29. Example of subordinate and coordinate junctions.

Source: https://assist.dla.mil -- Downloaded: 2016-12-09T23:59Z
Check the source to verify that this is the current version before use.

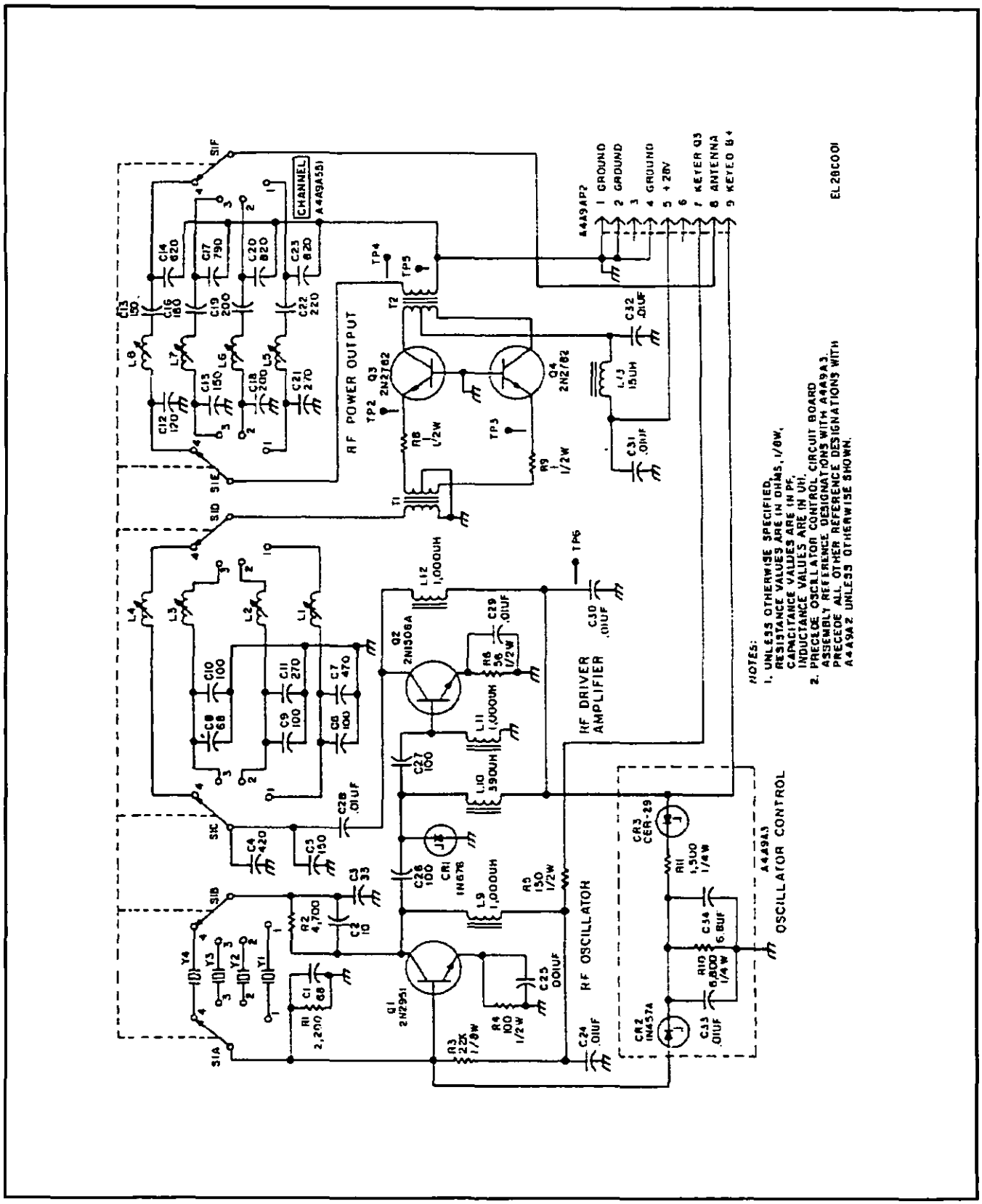

FIGURE 30. Example of hardware schematic diagram.

Source: https://assist.dla.mil Downloaded: 2016-12-09T23:59Z
Check the source to verify that this is the current version before use.

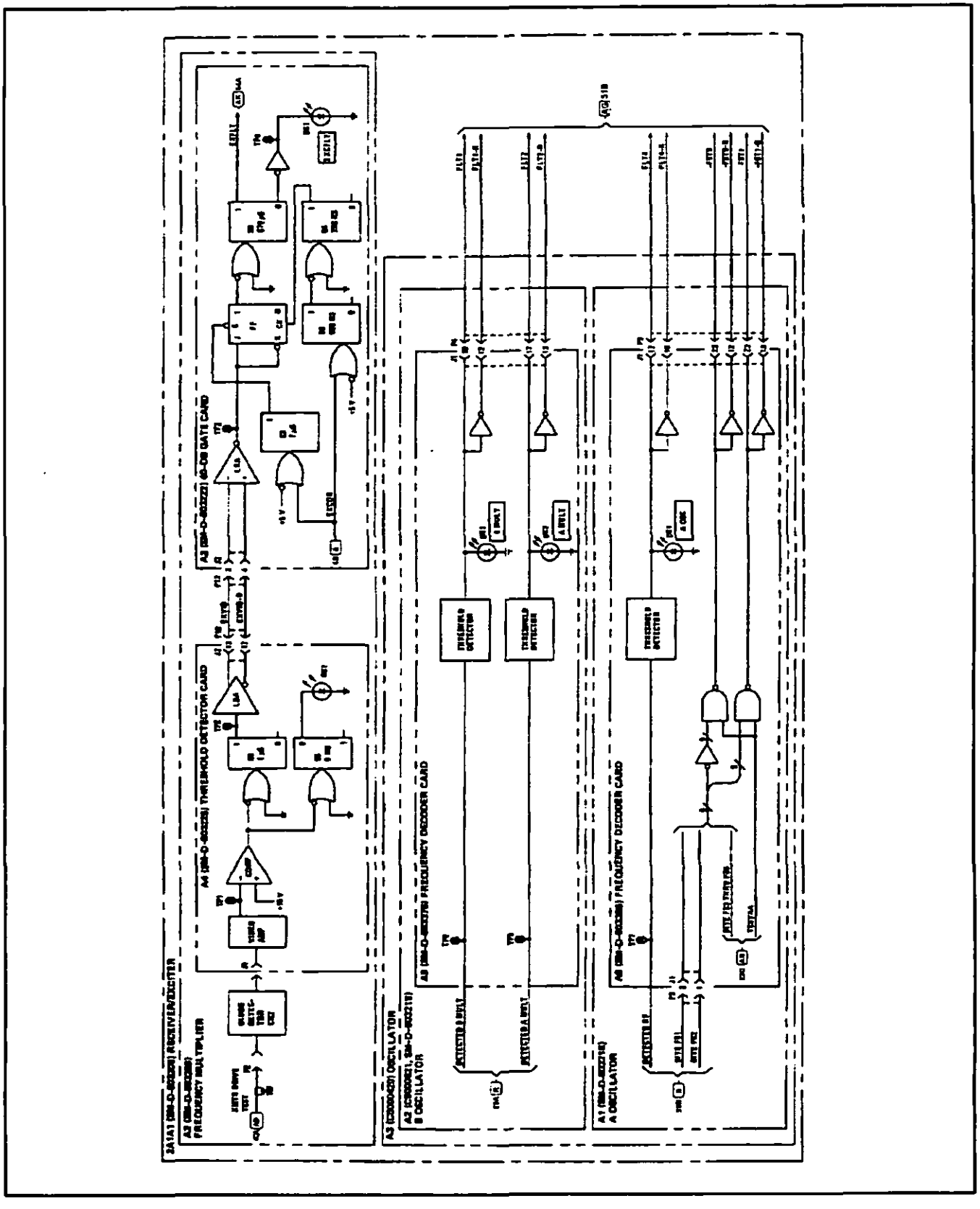

FIGURE 31. Example of a functional schematic.

Source: https://assist.dla.mil -- Downloaded: 2016-12-09T23:59Z
Check the source to verify that this is the current version before use.

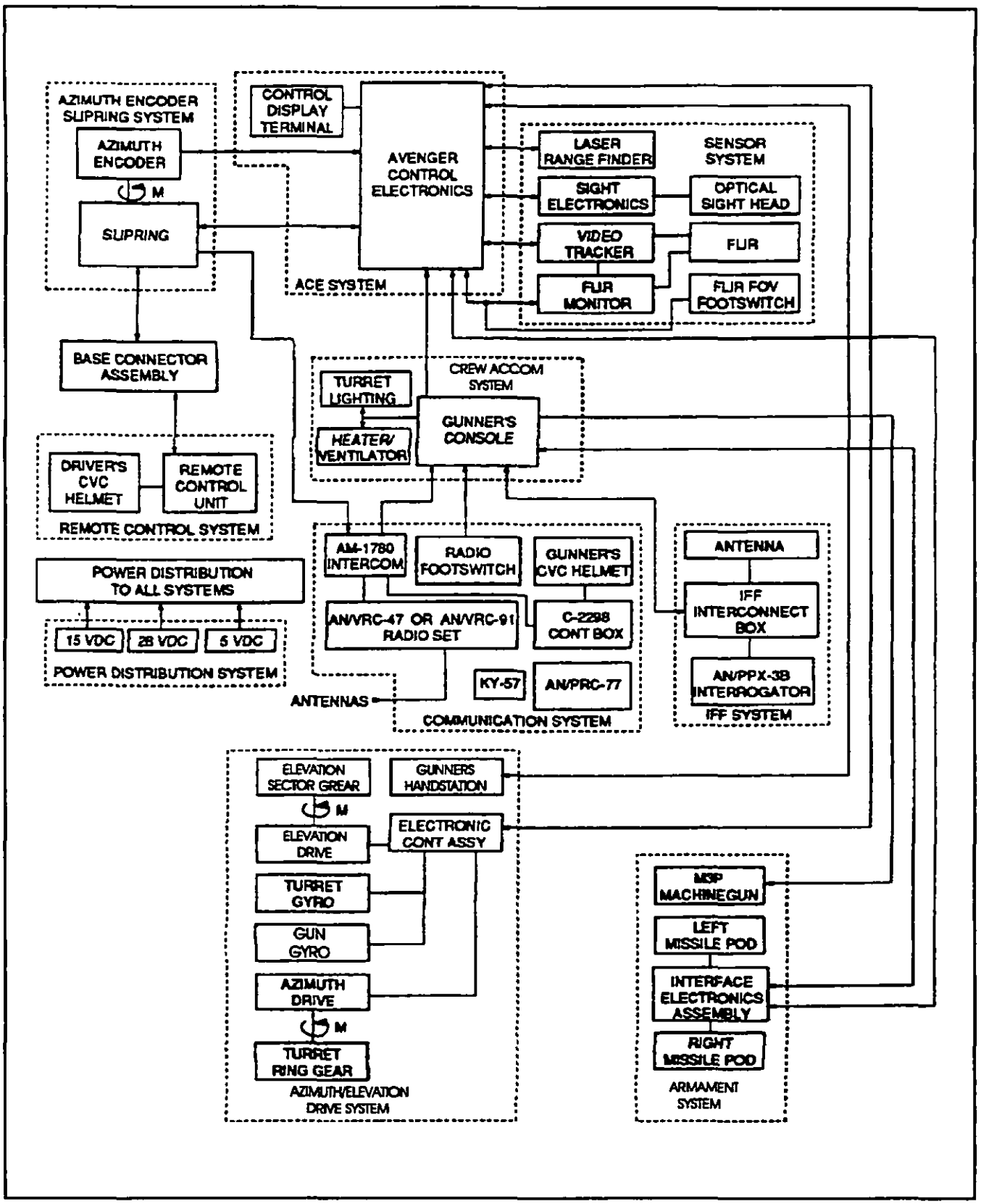

FIGURE 32. Example of a functional block diagram.

Source: https://assist.dla.mil -- Downloaded: 2016-12-09T23:59Z
Check the source to verify that this is the current version before use.

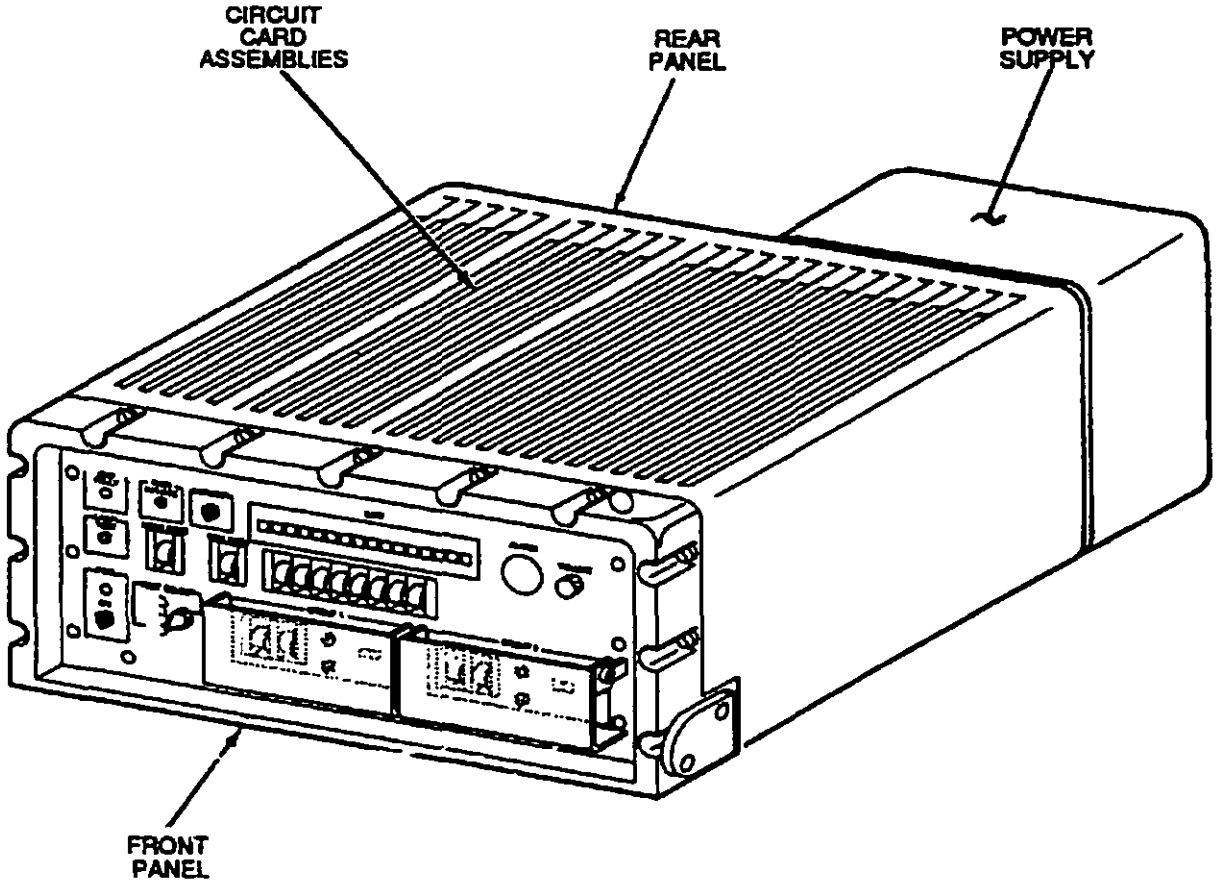

FIGURE 33. Example of a pictorial diagram.

Source: https://assist.dla.mil -- Downloaded: 2016-12-09T23:59Z
Check the source to verify that this is the current version before use.

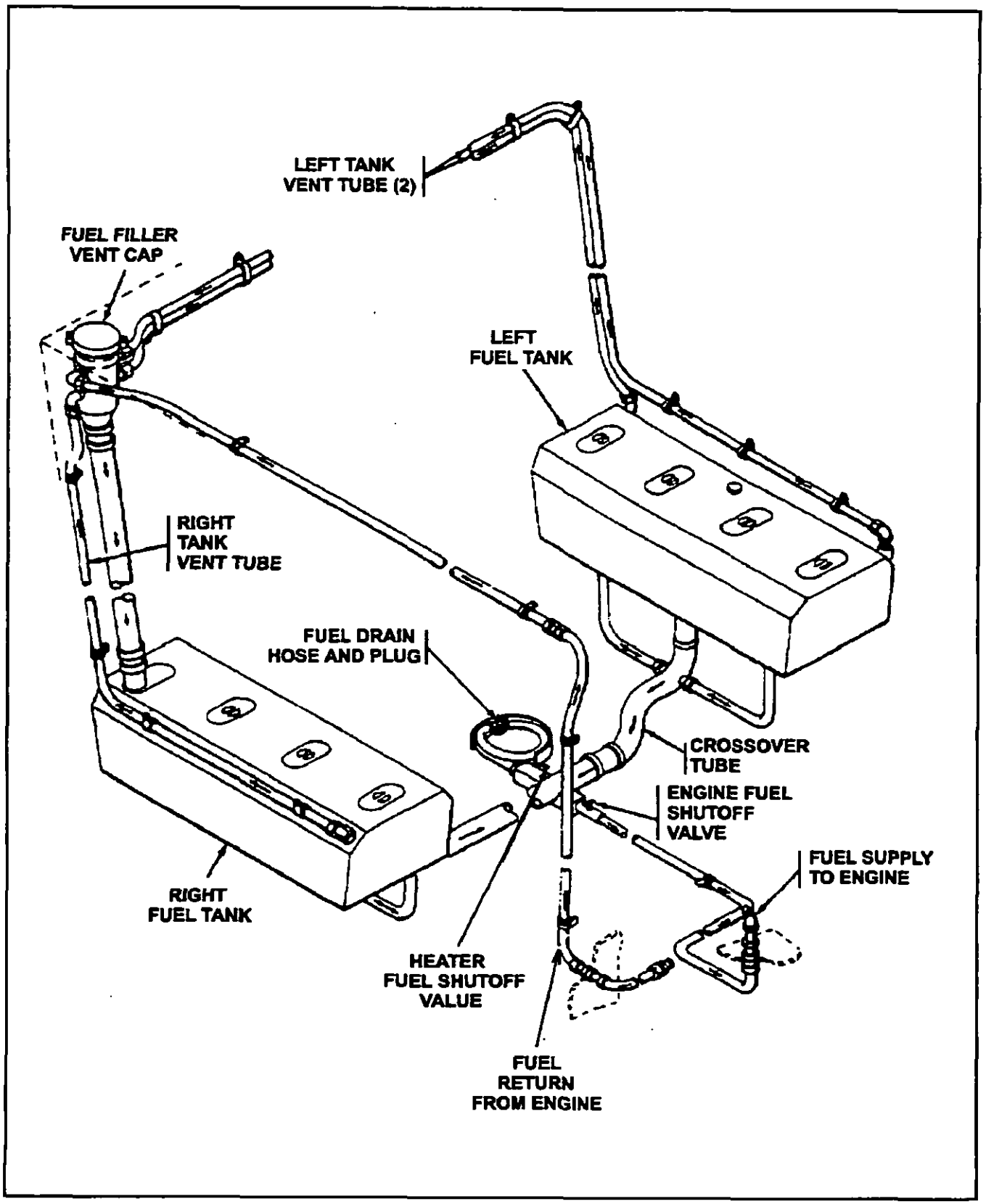

FIGURE 33. Example of a pictorial diagram - Continued.

Source: https://assist.dla.mil - Downloaded: 2016-12-09T23:59Z
Check the source to verify that this is the current version before use.

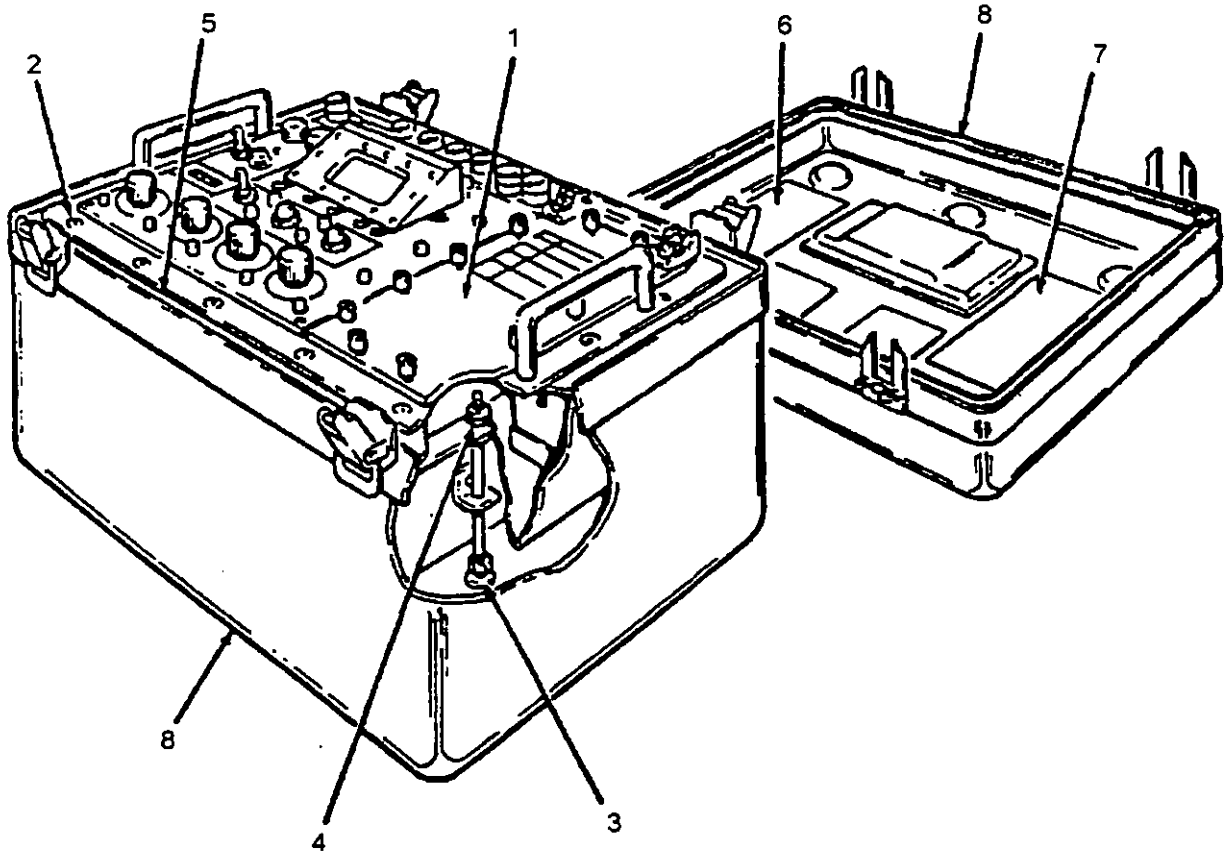

FIGURE 34. Example of a cutaway diagram.

Source: https://assist.dla.mil -- Downloaded: 2016-12-09T23:59Z
Check the source to verify that this is the current version before use.

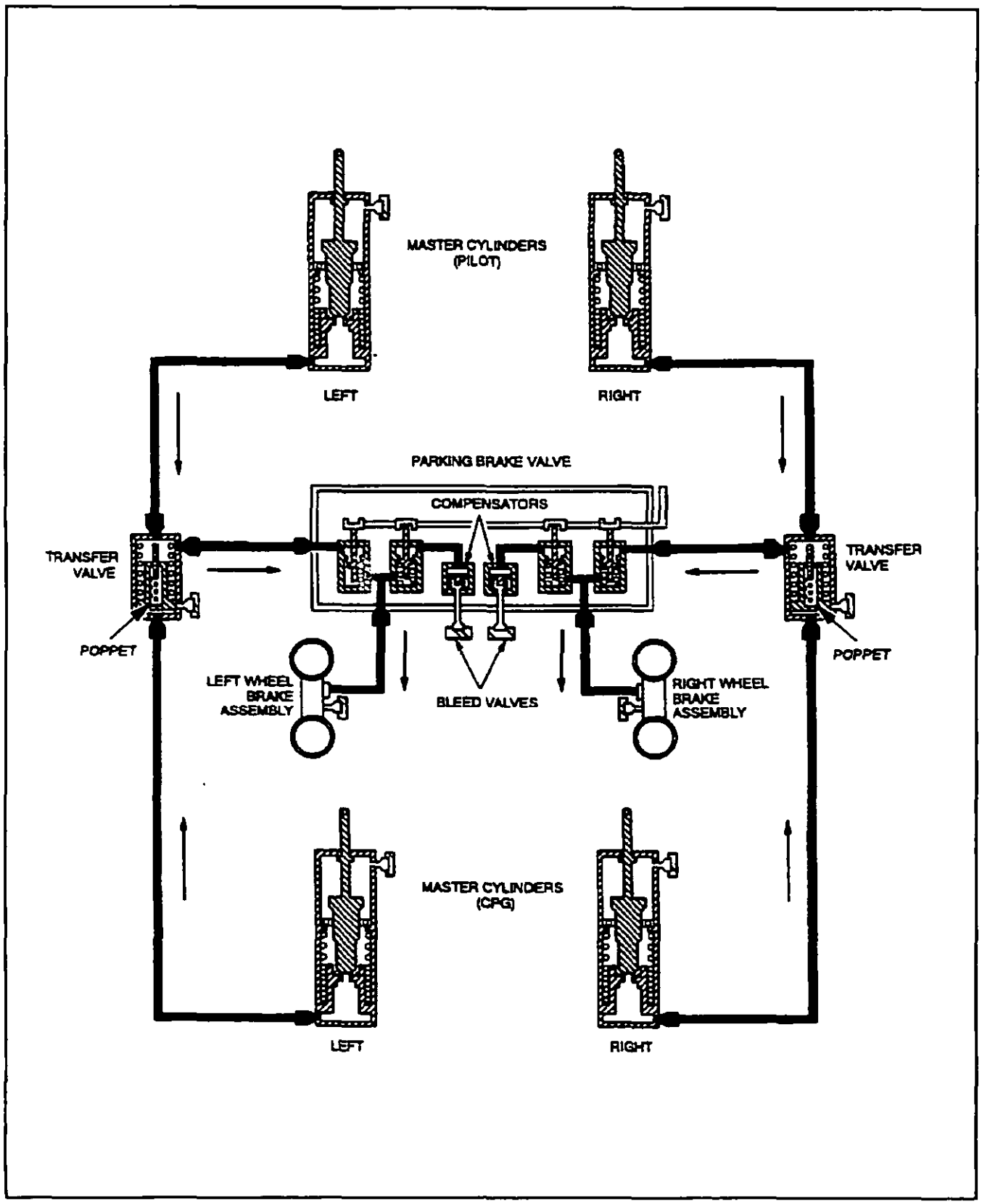

FIGURE 34. Example of a cutaway diagram - Continued.

Source: https://assist.dla.mil Downloaded: 2016-12-09T23:59Z
Check the source to verify that this is the current version before use.

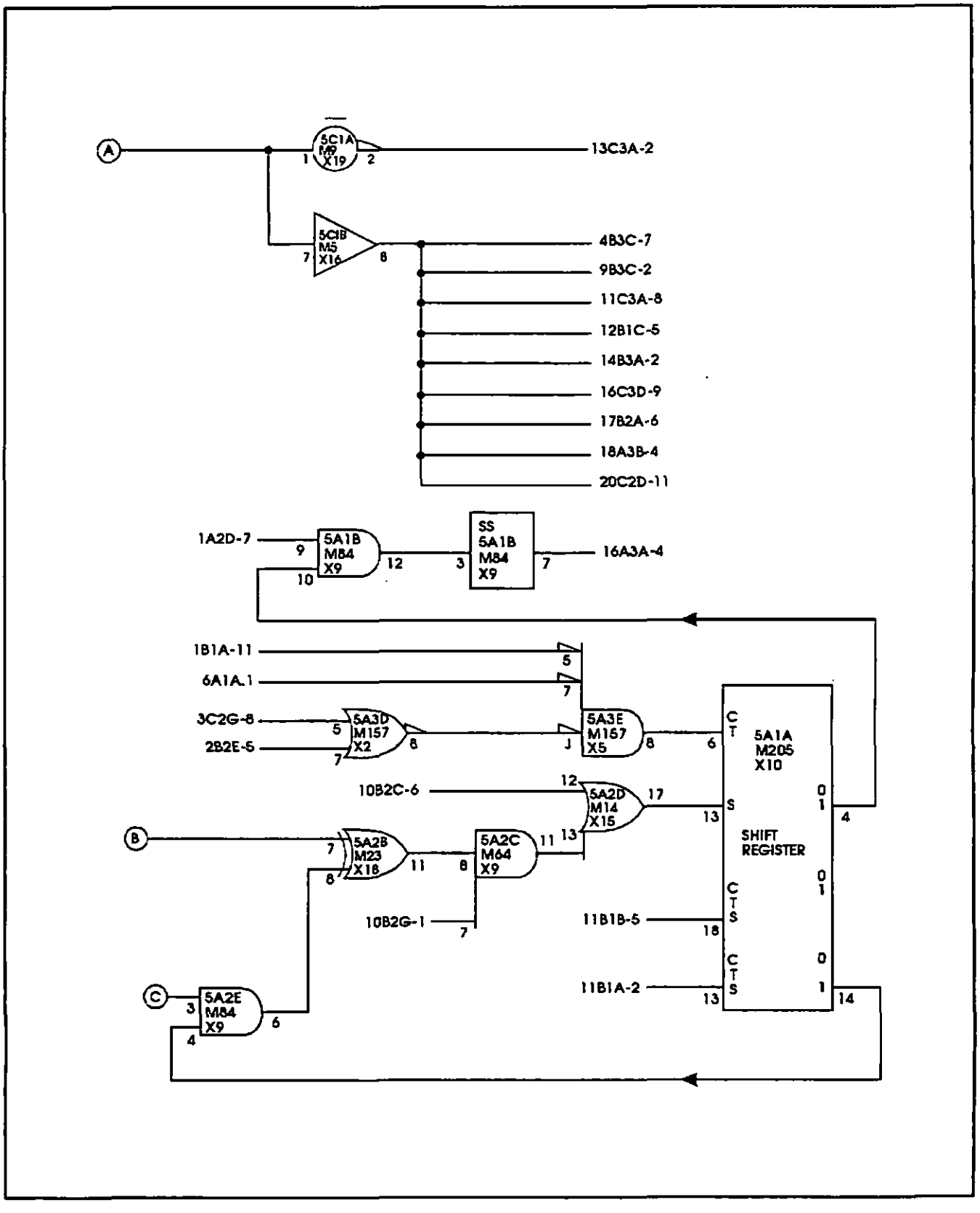

FIGURE 35. Example of a logic diagram.

Source: https://assist.dla.mil -- Downloaded: 2016-12-09T23:59Z
Check the source to verify that this is the current version before use.

J - $\overline{K}$ FLIP-FLOP TRUTH TABLE					
STARTING CONDITION (OUTPUT)		INPUT CONDITION		RESULT AT END OF CLOCK PULSE (OUTPUT)	
A	B	J	$\overline{K}$	A	B
L	H	L	L	NO CHANGE	
		L	H	NO CHANGE	
		H	L	H	L
		H	H	H	L
H	L	L	L	L	H
		L	H	NO CHANGE	
		H	L	L	H
		H	H	NO CHANGE	
A	B	SET	RESET	RESULT (OUTPUT)	
L	H	H	H	NO CHANGE	
		L	H	H	L
		L	L	DISALLOWED STATE	
		H	L	NO CHANGE	
H	L	H	H	NO CHANGE	
		L	H	NO CHANGE	
		L	L	DISALLOWED STATE	
		H	L	L	H

THE J-$\overline{K}$ FLIP-FLOP IS A MULTIPURPOSE STORAGE ELEMENT WHEREIN THE K INPUT IS INTERNALLY INVERTED. DEPENDING ON THE WIRING AT THE J-$\overline{K}$ INPUTS, THIS FF CAN BE CONFIGURED TO FUNCTION AS A J-K TYPE FF, J-$\overline{K}$ TYPE FF, D-TYPE FF OR A T-TYPE (TOGGLE) FF.

FIGURE 36. Example of a truth table.

Source: https://assist.dla.mil -- Downloaded: 2016-12-09T23:59Z
Check the source to verify that this is the current version before use.

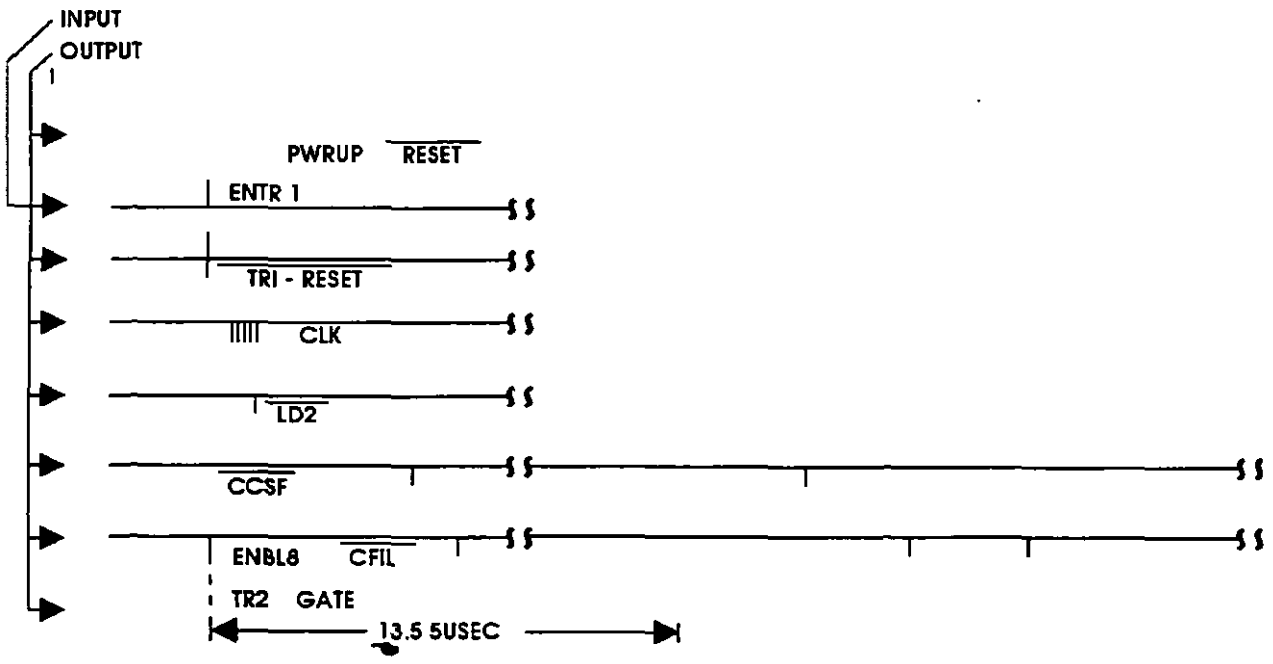

NOTES: 1. SCALE 1 USEC

2. SIGNALS OCCUR IN ORDER SHOWN STARTING AT THE TOP.

FIGURE 37. Example of a timing diagram.

Source: https://assist.dla.mil -- Downloaded: 2016-12-09T23:59Z
Check the source to verify that this is the current version before use.

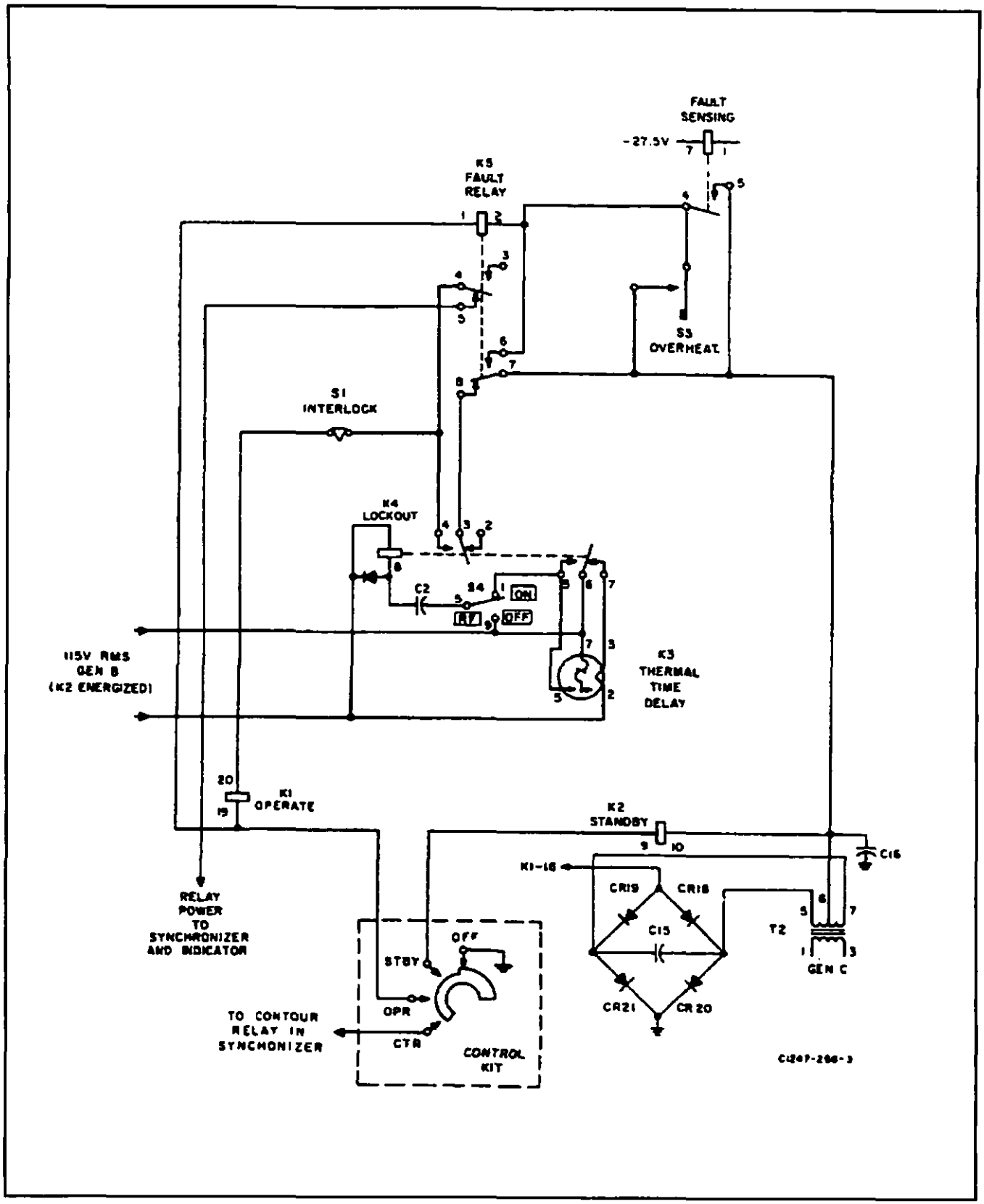

FIGURE 38. Example of a simplified diagram.

Source: https://assist.dla.mil Downloaded: 2016-12-09T23:59Z
Check the source to verify that this is the current version before use.

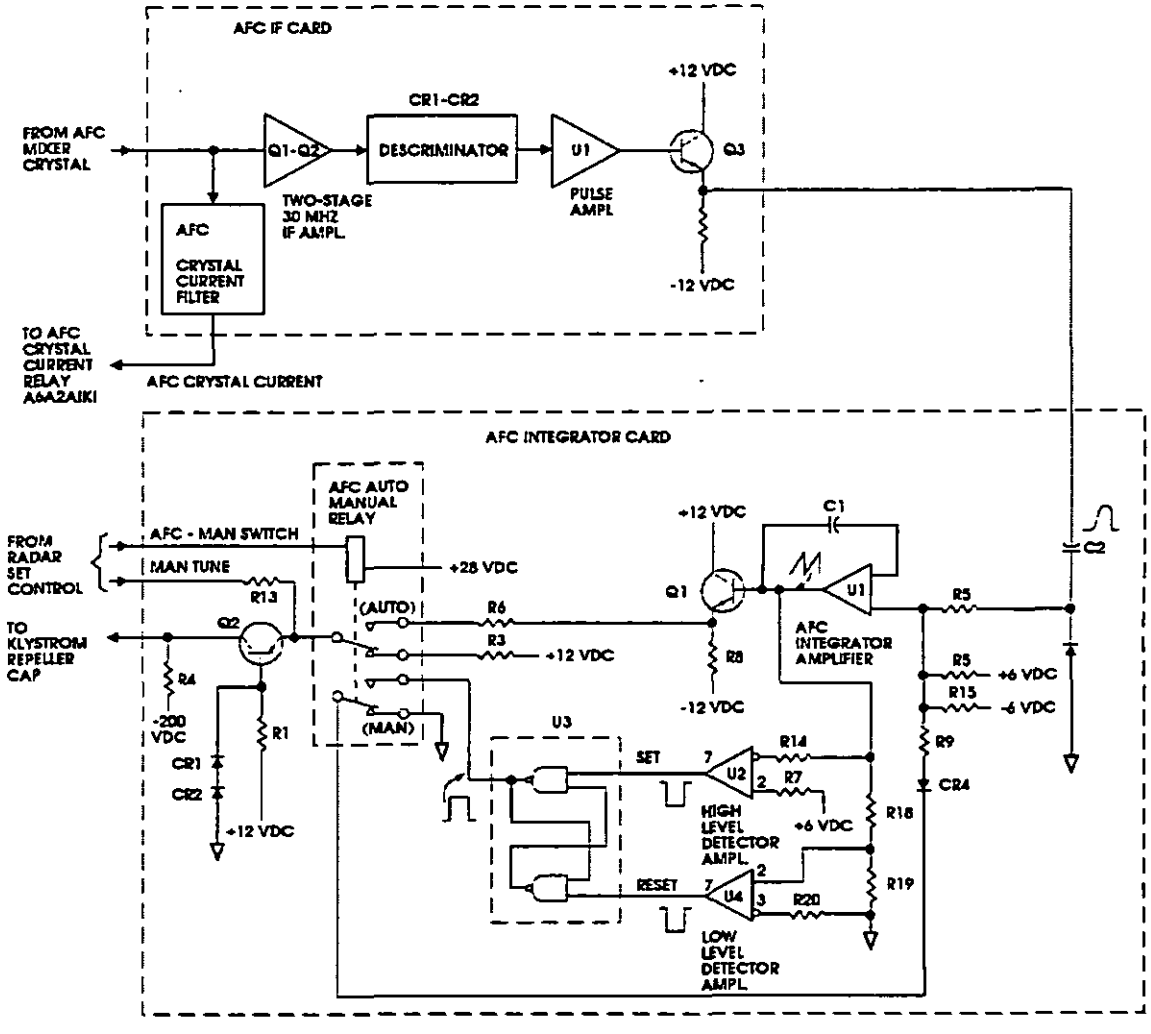

FIGURE 39. Example of a partial diagram.

Source: https://assist.dla.mil -- Downloaded: 2016-12-09T23:59Z
Check the source to verify that this is the current version before use.

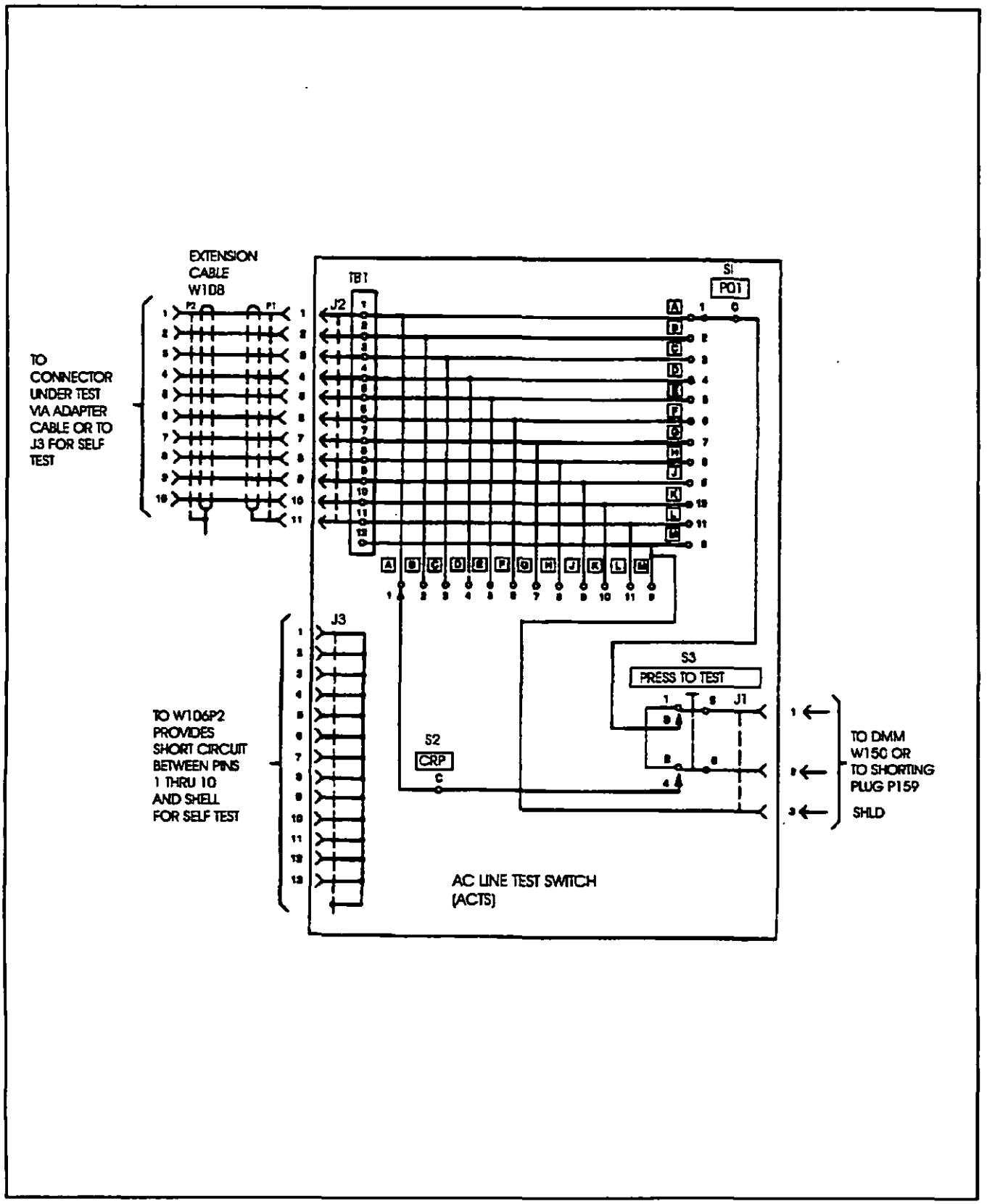

FIGURE 40. Example of a test diagram.

Source: https://assist.dla.mil -- Downloaded: 2016-12-09T23:59Z
Check the source to verify that this is the current version before use.

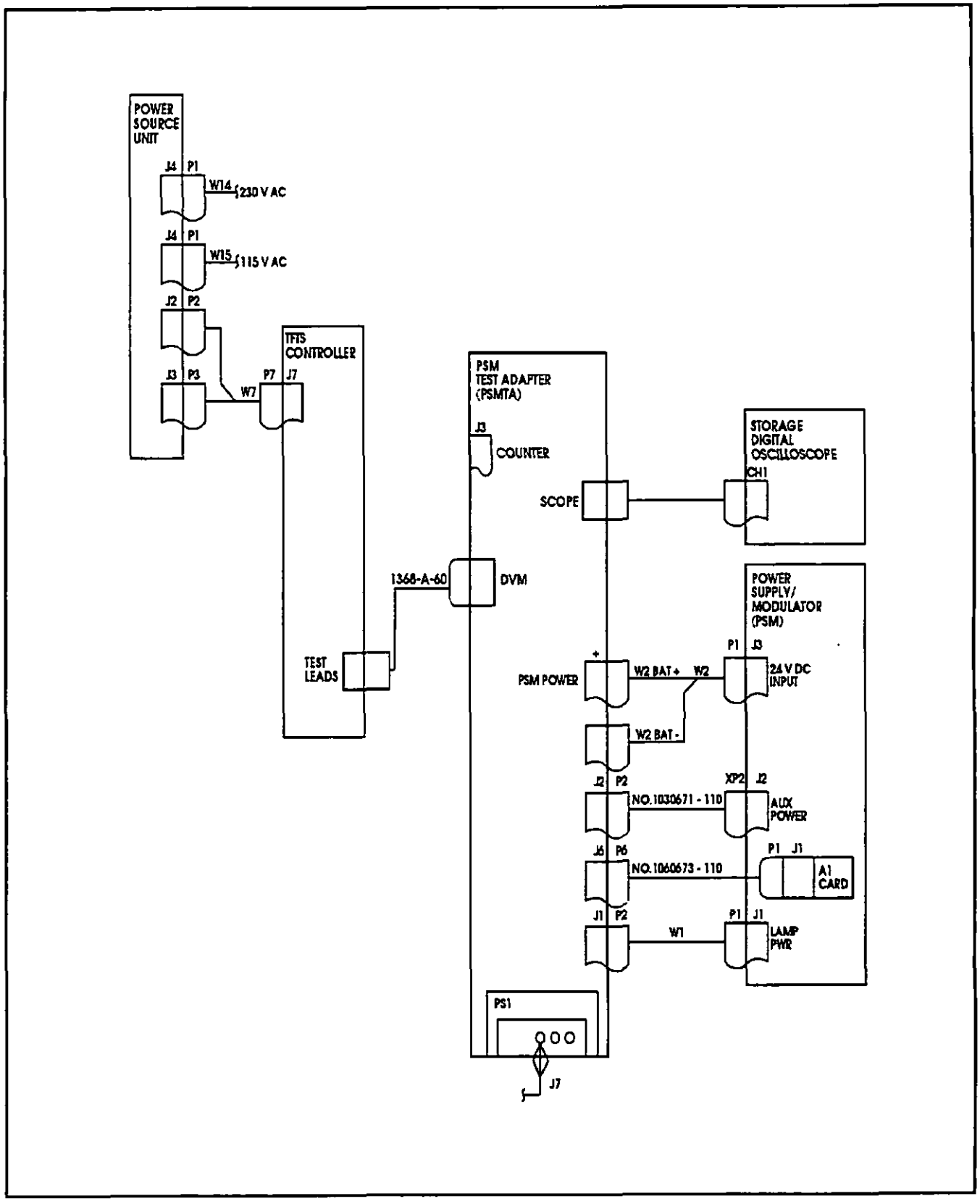

FIGURE 41. Example of a test setup diagram.

Source: https://assist.dla.mil -- Downloaded: 2016-12-09T23:59Z
Check the source to verify that this is the current version before use.

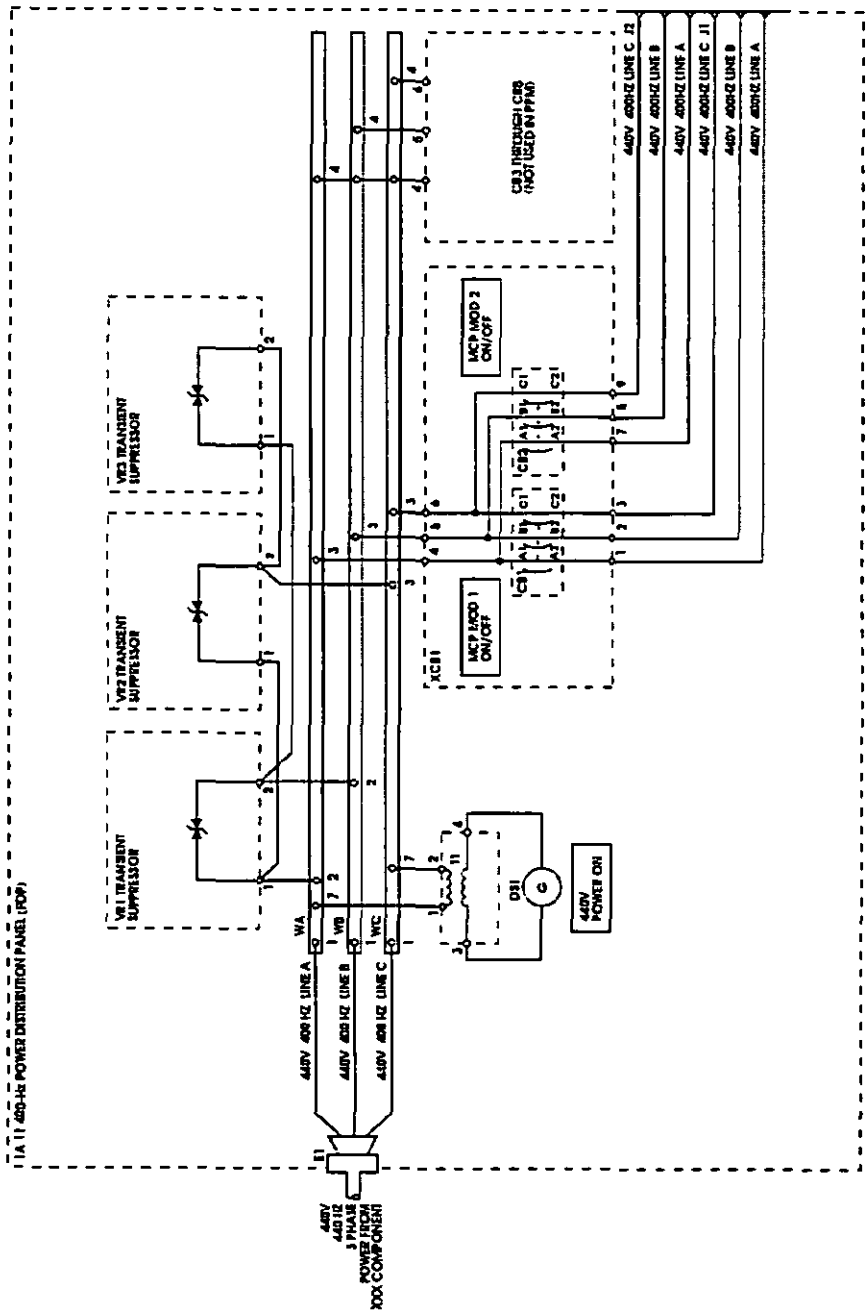

FIGURE 42. Example of a power distribution diagram.

Source: https://assist.dla.mil -- Downloaded: 2016-12-09T23:59Z
Check the source to verify that this is the current version before use.

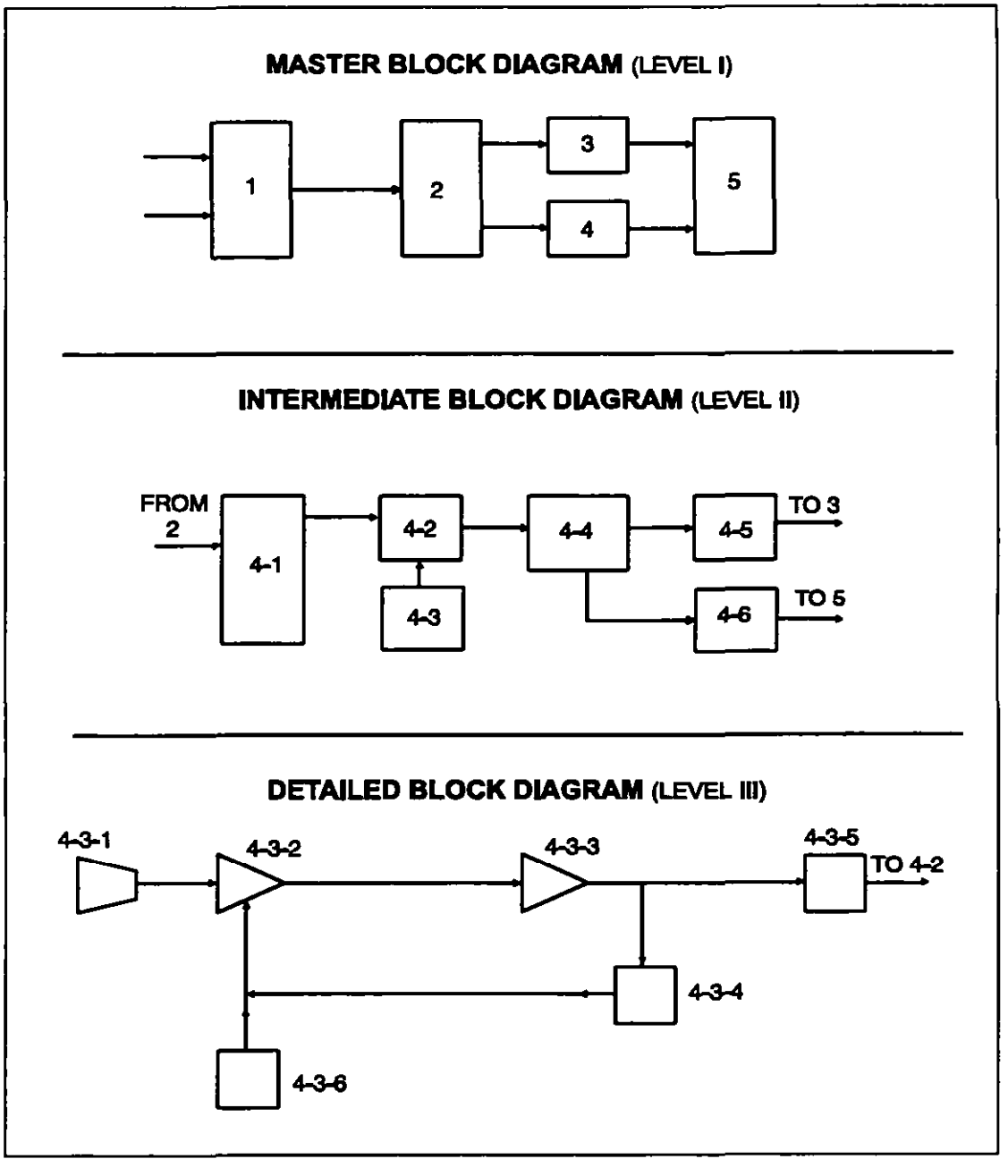

FIGURE 43. Example of a pyramid diagram.

Source: https://assist.dla.mil -- Downloaded: 2016-12-09T23:59Z
Check the source to verify that this is the current version before use.

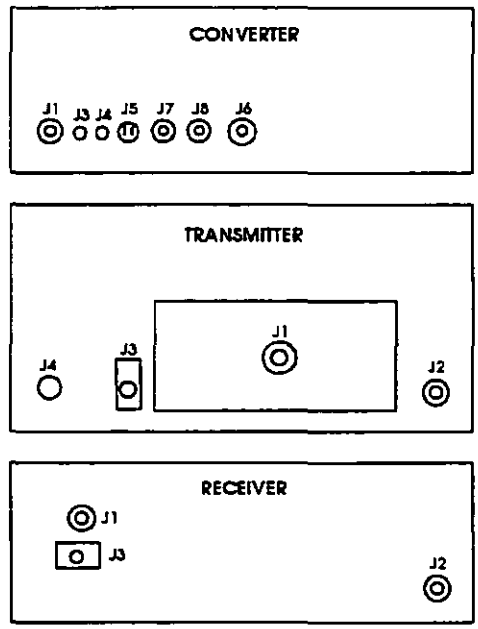

CABLE	FROM			TO		
	ASSEMBLY	JACK	CABLE PLUG	ASSEMBLY	JACK	CABLE PLUG
W101	CONVERTER	J1	P1	RECEIVER	J3	P2
W102	CONVERTER	J5	P1	RECEIVER	J1	P2
W103	CONVERTER	J7	P1	TRANSMITTER	J2	P2
W104	CONVERTER	J8	P1	RECEIVER	J2	P2
W106	CONVERTER	J6	P1	TRANSMITTER	J3	P2
W108	CONVERTER	J3	P1	TRANSMITTER	J4	P2
W107	CONVERTER	J4	P1	TRANSMITTER	J1	P2

FIGURE 44. Example of a cable diagram illustration with table.

Source: https://assist.dla.mil Downloaded: 2016-12-09T23:59Z
Check the source to verify that this is the current version before use.

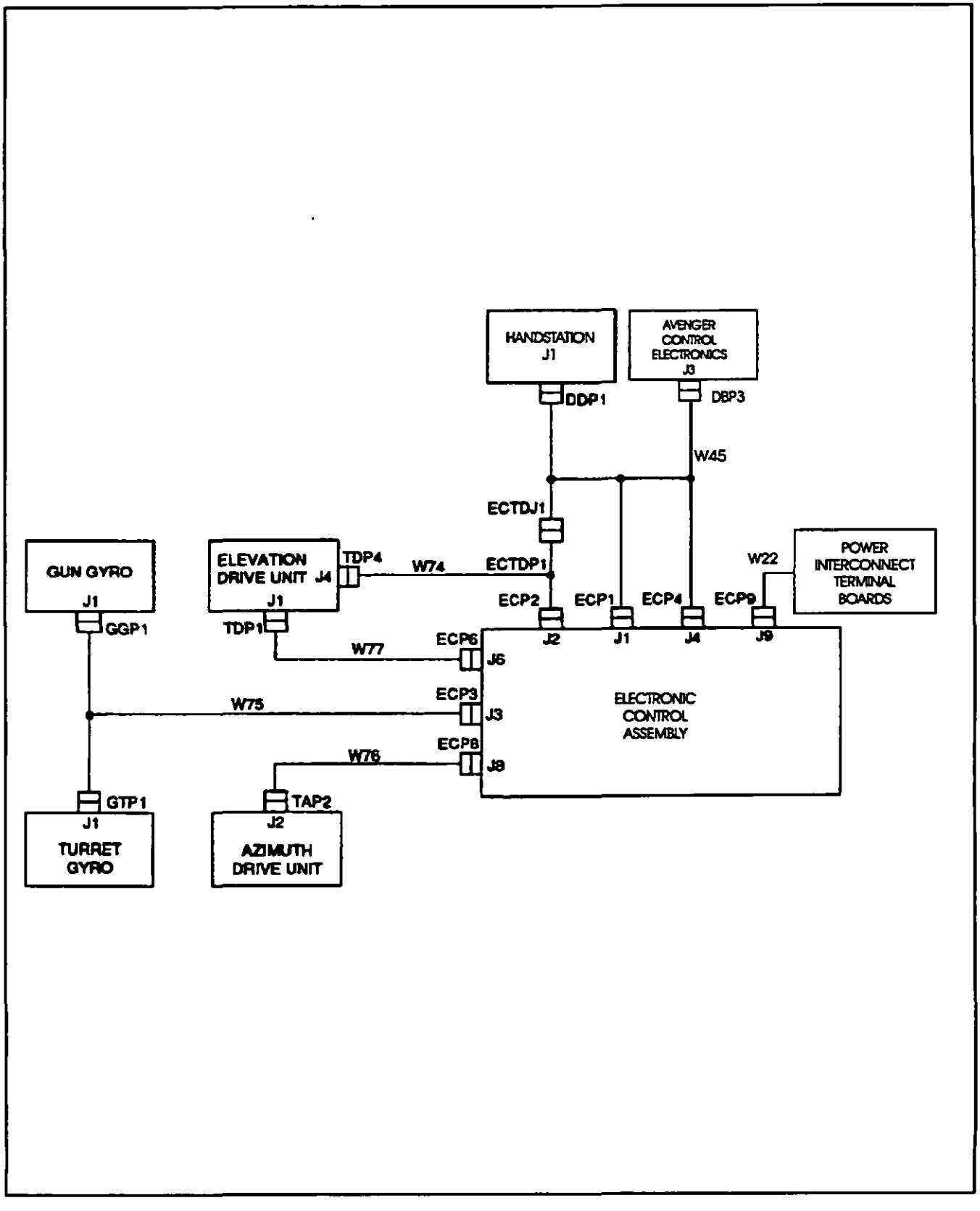

FIGURE 45. Example of a cable interconnect diagram.

Source: https://assist.dla.mil -- Downloaded: 2016-12-09T23:59Z
Check the source to verify that this is the current version before use.

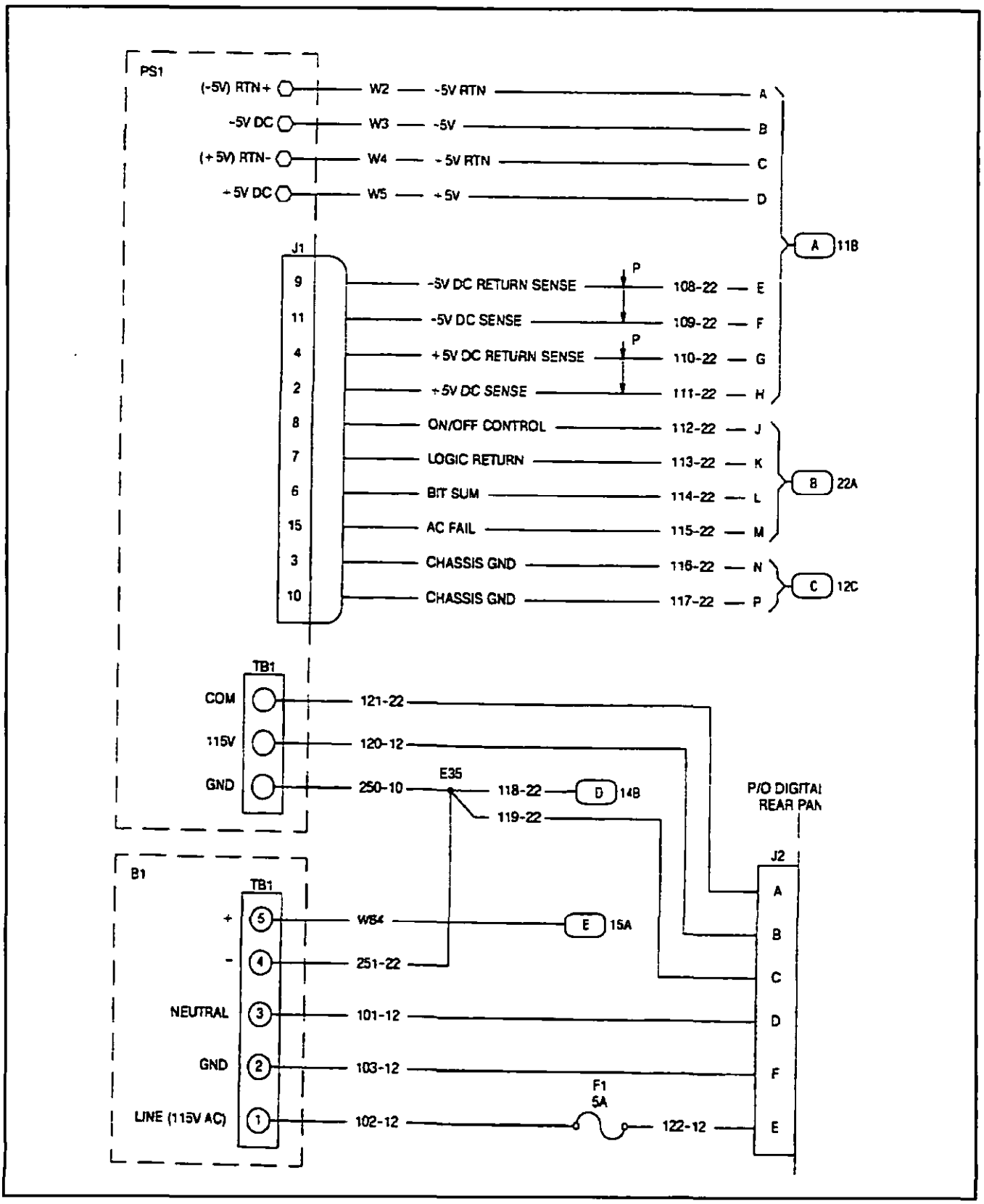

FIGURE 46. Example of a wiring diagram.

Source: https://assist.dla.mil Downloaded: 2016-12-09T23:59Z
Check the source to verify that this is the current version before use.

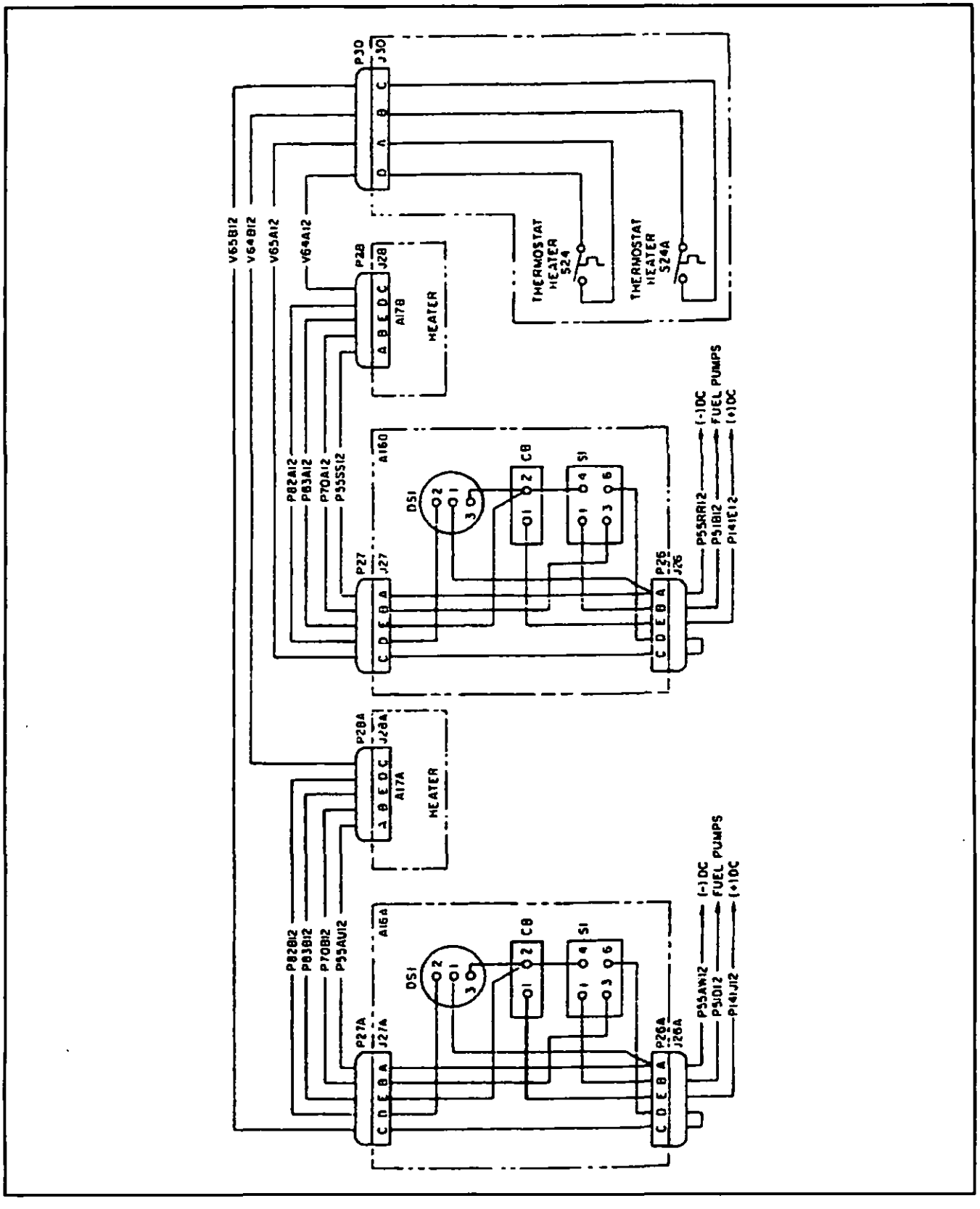

FIGURE 46. Example of a wiring diagram - Continued.

Source: https://assist.dla.mil -- Downloaded: 2016-12-09T23:59Z
Check the source to verify that this is the current version before use.

FROM	SHD GRP	WIRE ID	TO		SHD GRP	ROUTE CODE
A17(Cont)						
J2-A		381	A17	J1-A		
J2-B		382	A17	J1-B		
J2-C		383	A17	J1-C		
J2-D		384	A17	J1-D		
S1	FS	385	A39		FT	
S1-1		351	A17	TB1-1		
S1-2		BLK385	A39			
S1-3		353	A17	TB1-3		
S1-4		352	A17	TB1-2		
S1-5		RED385	A39			
S1-6		354	A17	TB1-4		
S2-1		368	A17	S3-1		
S2-1		378	A17	TB2-1		
S2-2		355	A17	TB1-5		
S3-1		368	A17	S2-1		
S3-1		369	A17	S4-1		
S3-2		356	A17	TB1-6		
S4-1		369	A17	S3-1		
S4-1		370	A17	S5-1		
S4-2		357	A17	TB1-7		
S5-1		370	A17	S4-1		
S5-1		371	A17	S6-1		
S5-2		358	A17	TB1-8		
S6-1		371	A17	S5-1		
S6-1		372	A17	S7-1		
S6-2		359	A17	TB1-9		
S7-1		372	A17	S8-1		
S7-1		373	A17	S8-1		
S7-2		360	A17	TB1-10		
S8-1		373	A17	S7-1		
S8-1		374	A17	S9-4		
S8-2		361	A17	TB2-4		
S9-1		362	A17	TB2-5		
S9-2		363	A17	TB2-6		
S9-3		364	A17	TB2-7		
S9-4		374	A17	S8-1		
S9-4		375	A17	S10-4		
S10-1		365	A17	TB2-8		
S10-2		366	A17	TB2-9		
S10-3		367	A17	TB2-10		
S10-4		375	A17	S9-4		
TB1		386		TB12		A-D
TB1-1		351	A17	S1-1		
TB1-1		386A		TB12-1		A-D
TB1-2		352	A17	S1-4		
TB1-2		386B		TB12-2		A-D
TB1-3		353	A17	S1-3		
TB1-3		386C		TB12-3		A-D
TB1-4		354	A17	S1-6		
TB1-4		386D		TB12-4		A-D
TB1-5		355	A17	S2-2		
TB1-5		386E		TB12-5		A-D
TB1-6		356	A17	S3-2		
TB1-6		386F		TB12-6		A-D
TB1-7		357	A17	S4-2		
TB1-7		386G		TB12-7		A-D
TB1-8		358	A17	S5-2		

FROM	SHD GRP	WIRE ID	TO		SHD GRP	ROUTE CODE
A17(Cont)						
TB1-8		386H		TB12-8		A-D
TB1-9		359	A17	S7-2		
TB1-9		386J		TB12-9		A-D
TB1-10		360	A17	S7-2		
TB1-10		386K		TB12-10		A-D
TB2		387		TB13		A-D
TB2-1		378	A17	S2-1		
TB2-1		387A		TB13-2		A-D
TB2-2		388	A20	1		
TB2-2		387B		TB13-4		A-D
TB2-3		389	A20	2		
TB2-3		387C		TB13-6		A-D
TB2-4		361	A17	S8-2		
TB2-4		387D		TB12-11		A-D
TB2-5		362	A17	S9-1		
TB2-5		387E		TB12-12		A-D
TB2-6		363	A17	S9-2		
TB2-6		387F		TB12-13		A-D
TB2-7		364	A17	S9-3		
TB2-7		387G		TB12-14		A-D
TB2-8		365	A17	S10-1		
TB2-8		387H		TB13-12		A-D
TB2-9		366	A17	S10-2		
TB2-9		387J		TB13-13		A-D
TB2-10		367	A17	S10-3		
TB2-10		387K		TB13-14		A-D
A18						
E1		705	A18	STP	FU	
STP	FU	705	A18	E1		
J1-A		416		P10-A		
J1-A		420	A18	J2-A		
J1-B		417		P10-B		
J1-B		421	A18	J2-B		
J1-C		418		P10-C		
J1-C		422	A18	J2-C		
J1-D		419		P10-D		
J1-D		423	A18	J2-D		
J2-A		420	A18	J1-A		
J2-B		421	A18	J1-B		
J2-C		422	A18	J1-C		
J2-D		423	A18	J1-D		
S1	FU	424	A40		FV	
S1-1		390	A18	TB1-1		
S1-2		BLK424	A40			
S1-3		392	A18	TB1-3		
S1-4		391	A18	TB1-2		
S1-5		RED424	A40			
S1-6		393	A18	TB1-4		
S2-1		407	A18	S3-1		
S2-1		415	A18	TB2-1		
S2-2		394	A18	TB1-5		
S3-1		407	A18	S2-1		
S3-1		408	A18	S4-1		
S3-2		395	A18	TB1-6		
S4-1		408	A18	S3-1		
S4-1		409	A18	S5-1		
S4-2		396	A18	TB1-7		

FIGURE 47. Example of a wire list.

Source: https://assist.dla.mil -- Downloaded: 2016-12-09T23:59Z
Check the source to verify that this is the current version before use.

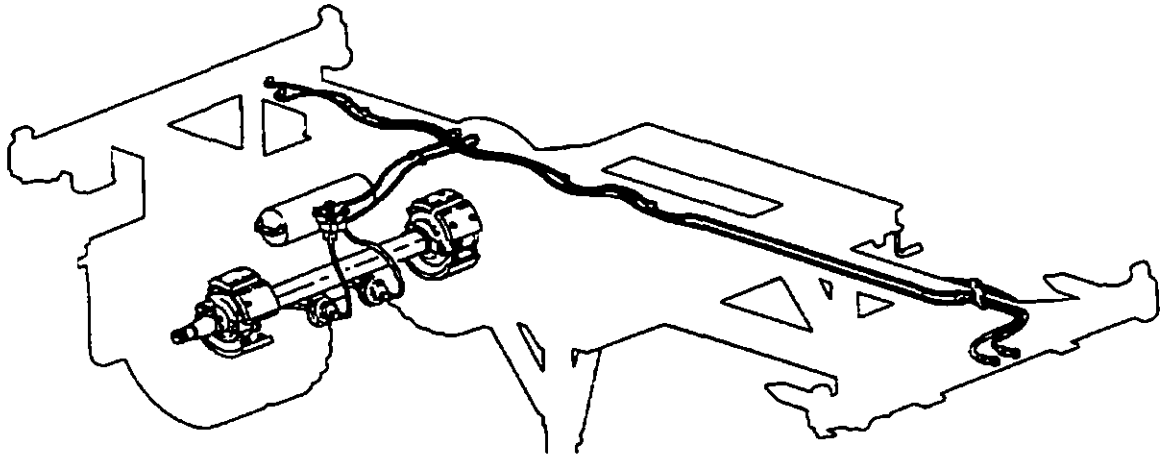

FIGURE 48. Example of a piping diagram.

Source: https://assist.dla.mil -- Downloaded: 2016-12-09T23:59Z
Check the source to verify that this is the current version before use.

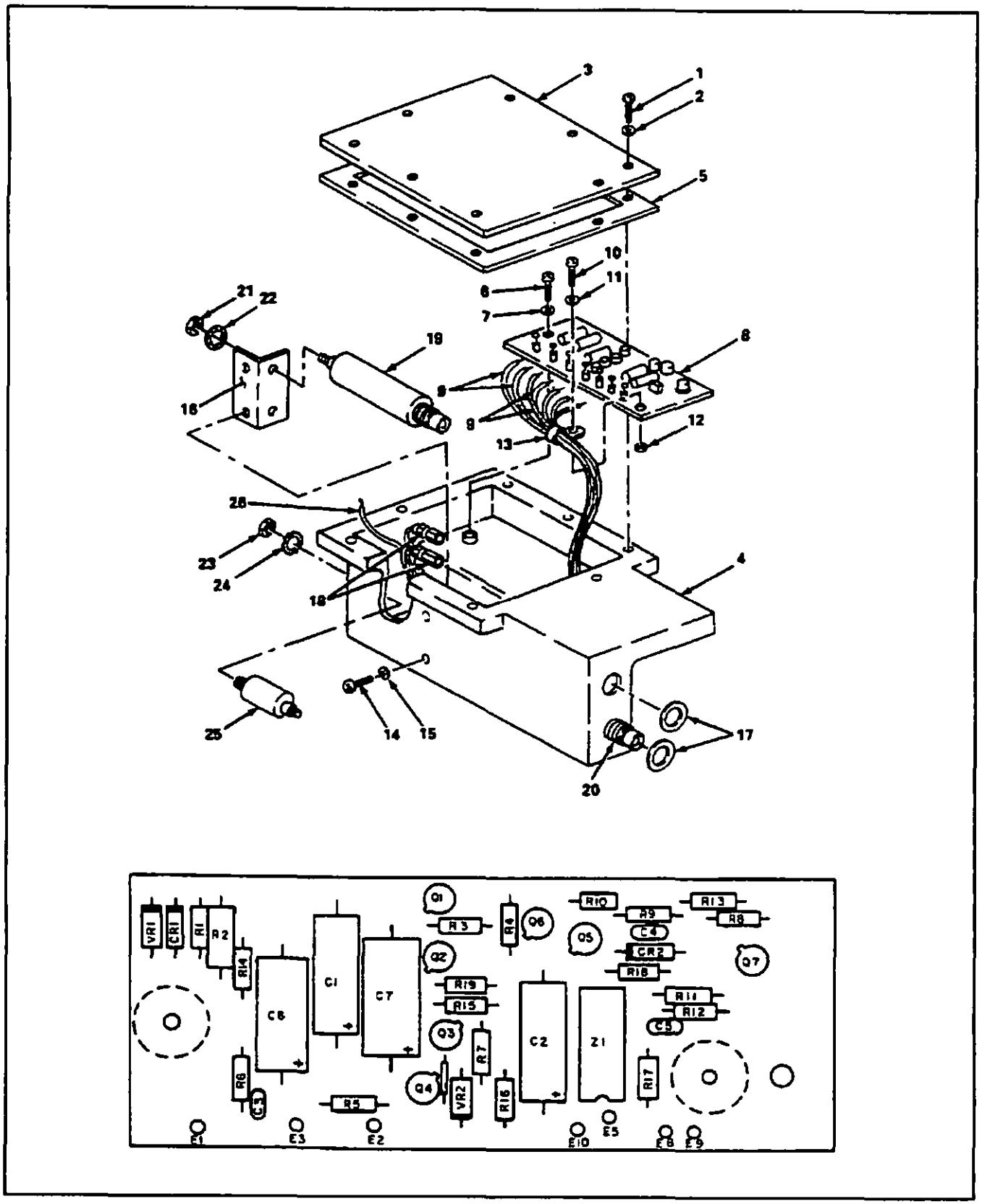

FIGURE 49. Example of an electronic component card illustration.

Source: https://assist.dla.mil Downloaded: 2016-12-09T23:59Z
Check the source to verify that this is the current version before use.

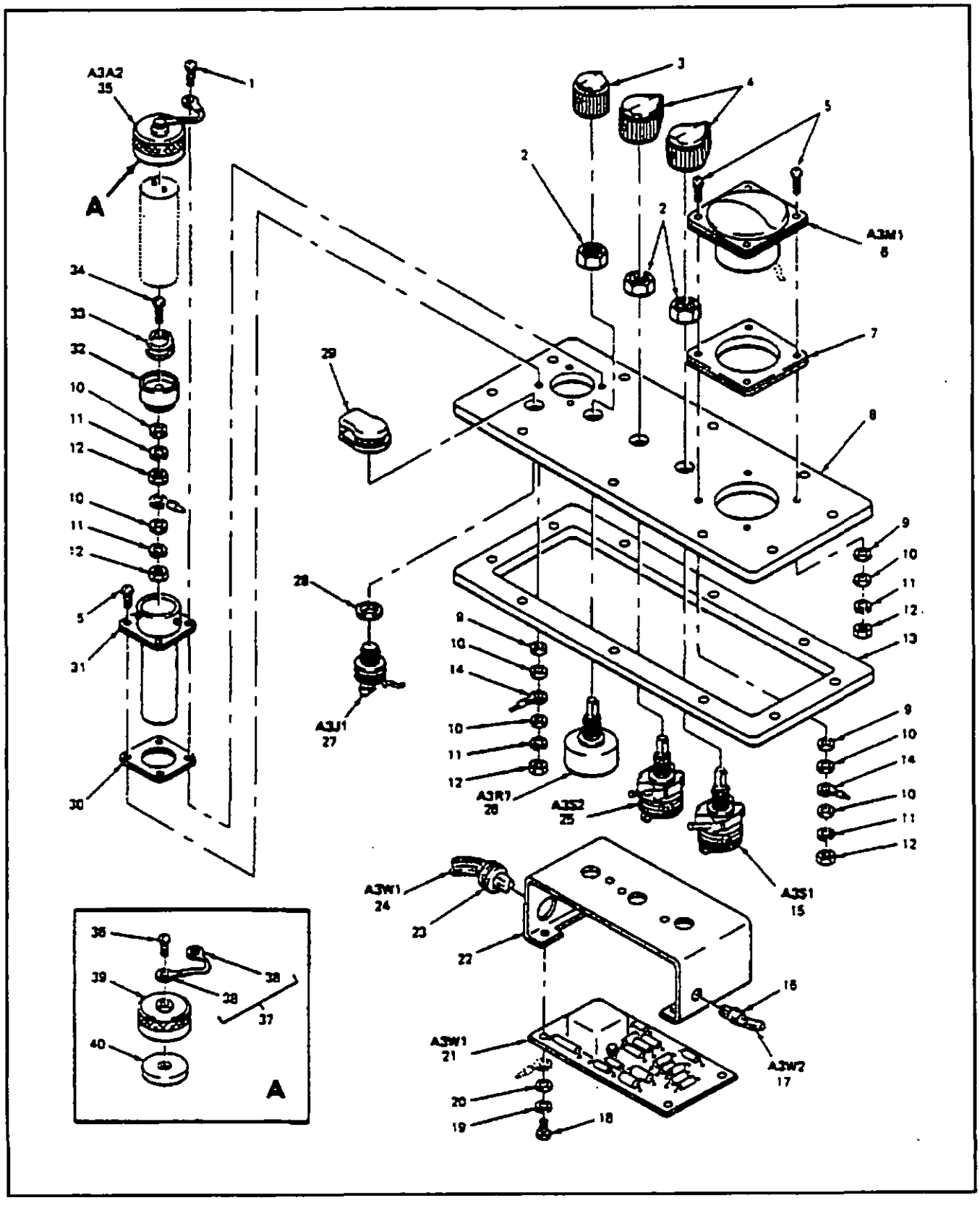

FIGURE 50. Example of an electronic equipment RPSTL illustration.

Source: https://assist.dla.mil -- Downloaded: 2016-12-09T23:59Z
Check the source to verify that this is the current version before use.

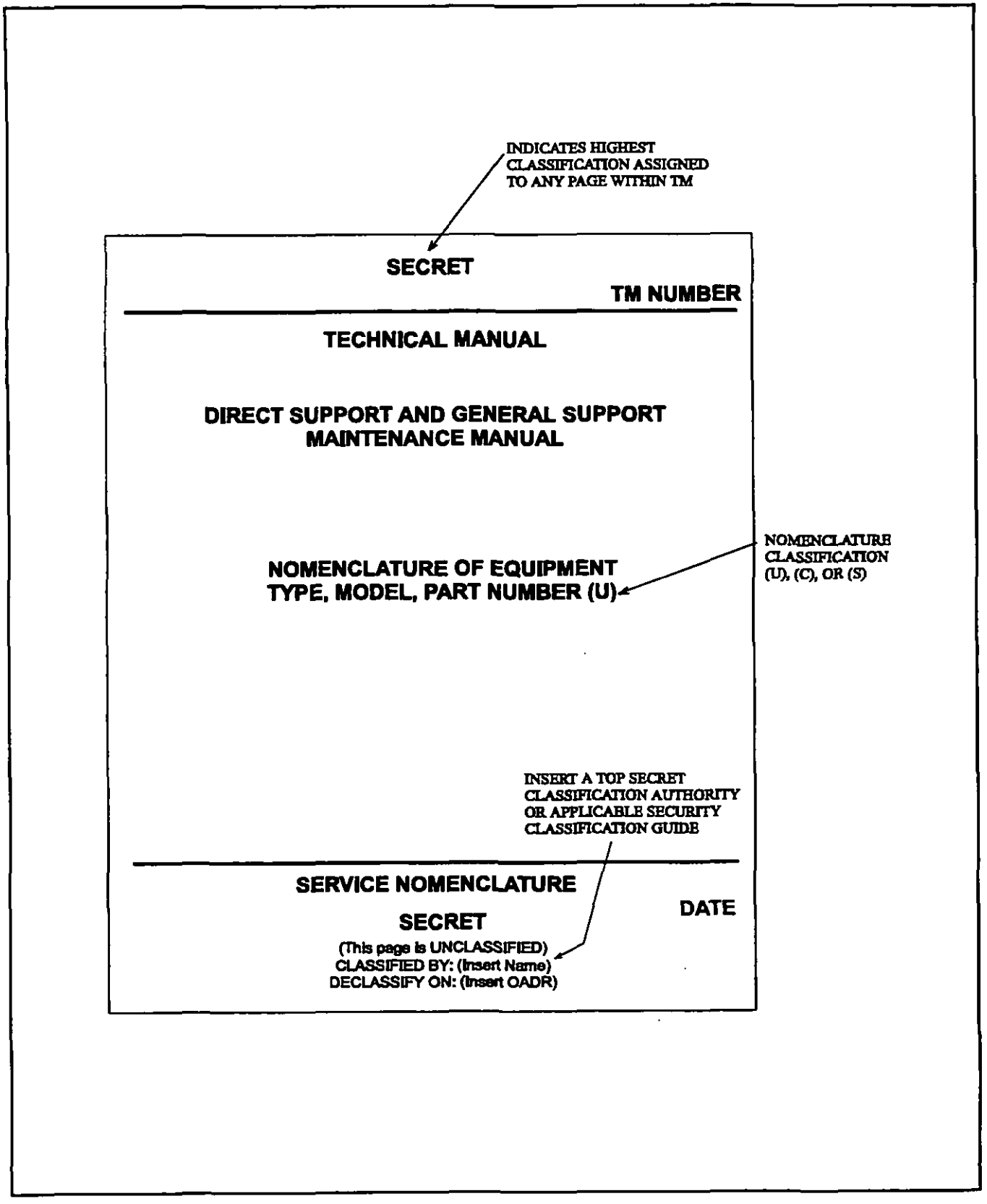

FIGURE 51. Example of security classification markings for cover.

Source: https://assist.dla.mil -- Downloaded: 2016-12-09T23:59Z
Check the source to verify that this is the current version before use.

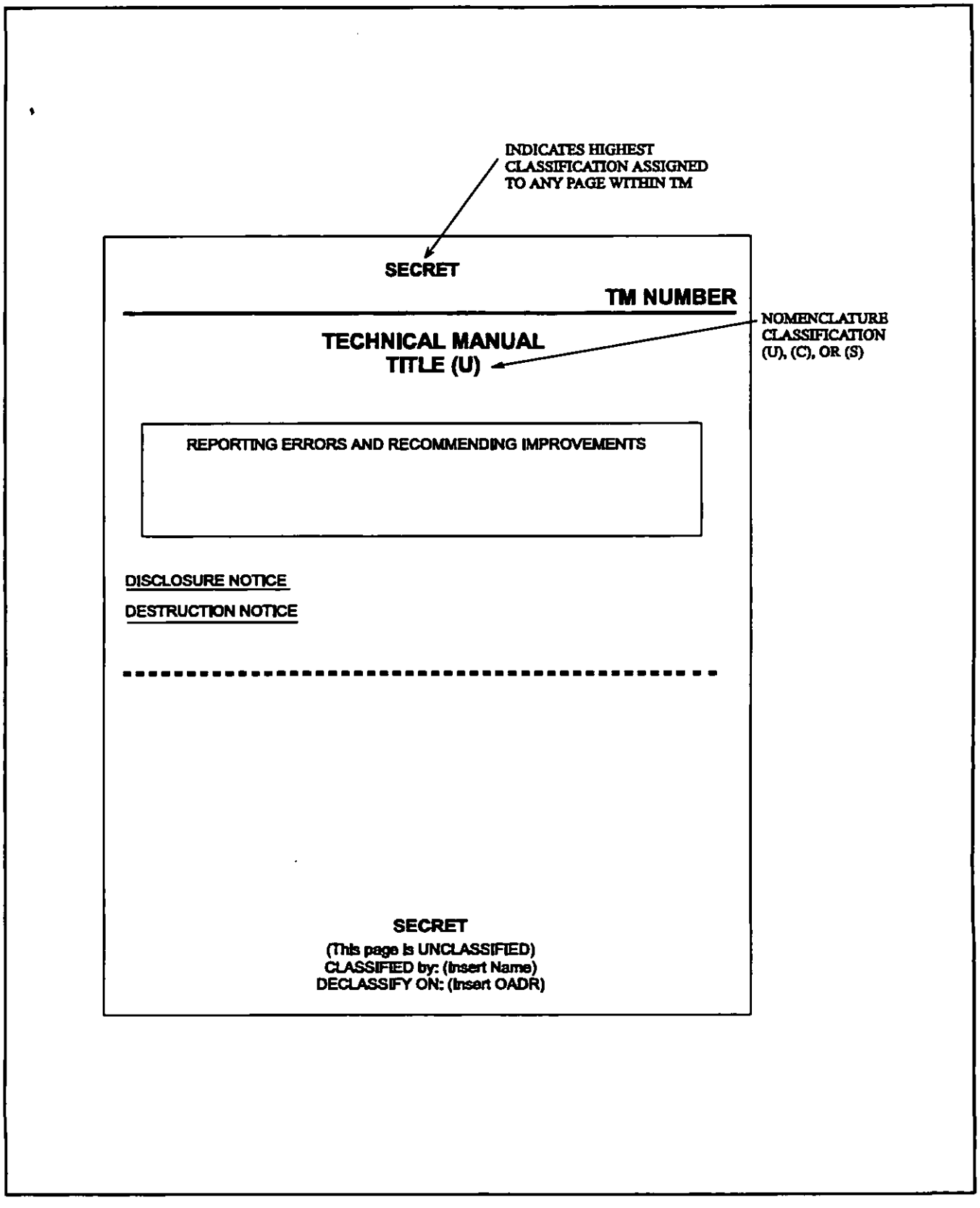

FIGURE 52. Example of security classification markings for title block page.

Source: https://assist.dla.mil -- Downloaded: 2016-12-09T23:59Z
Check the source to verify that this is the current version before use.

HIGHEST CLASSIFICATION OF PAGE. IF BACKUP PAGE DOES NOT CONTAIN CLASSIFIED DATA, IT WILL BE MARKED AS FOLLOWS:
CONFIDENTIAL
(This page is UNCLASSIFIED)

CONFIDENTIAL
TM XX-XXXX-XXX-XX

TABLE OF CONTENTS

WP Sequence No.

WARNING SUMMARY
HOW TO USE THIS MANUAL
CHAPTER 1 - HEADING
(C) Work Package Title ..... XXXX XX
Work Package Title ..... XXXX XX
Work Package Title ..... XXXX XX
Work Package Title ..... XXXX XX
CHAPTER 2 - HEADING
Work Package Title ..... XXXX XX
(C) Work Package Title ..... XXXX XX

INDICATES CONFIDENTIAL TITLE.
DO NOT MARK UNCLASSIFIED TITLES.

CONFIDENTIAL

FIGURE 53. Example of security classification markings for table of contents.

Source: https://assist.dla.mil -- Downloaded: 2016-12-09T23:59Z
Check the source to verify that this is the current version before use.

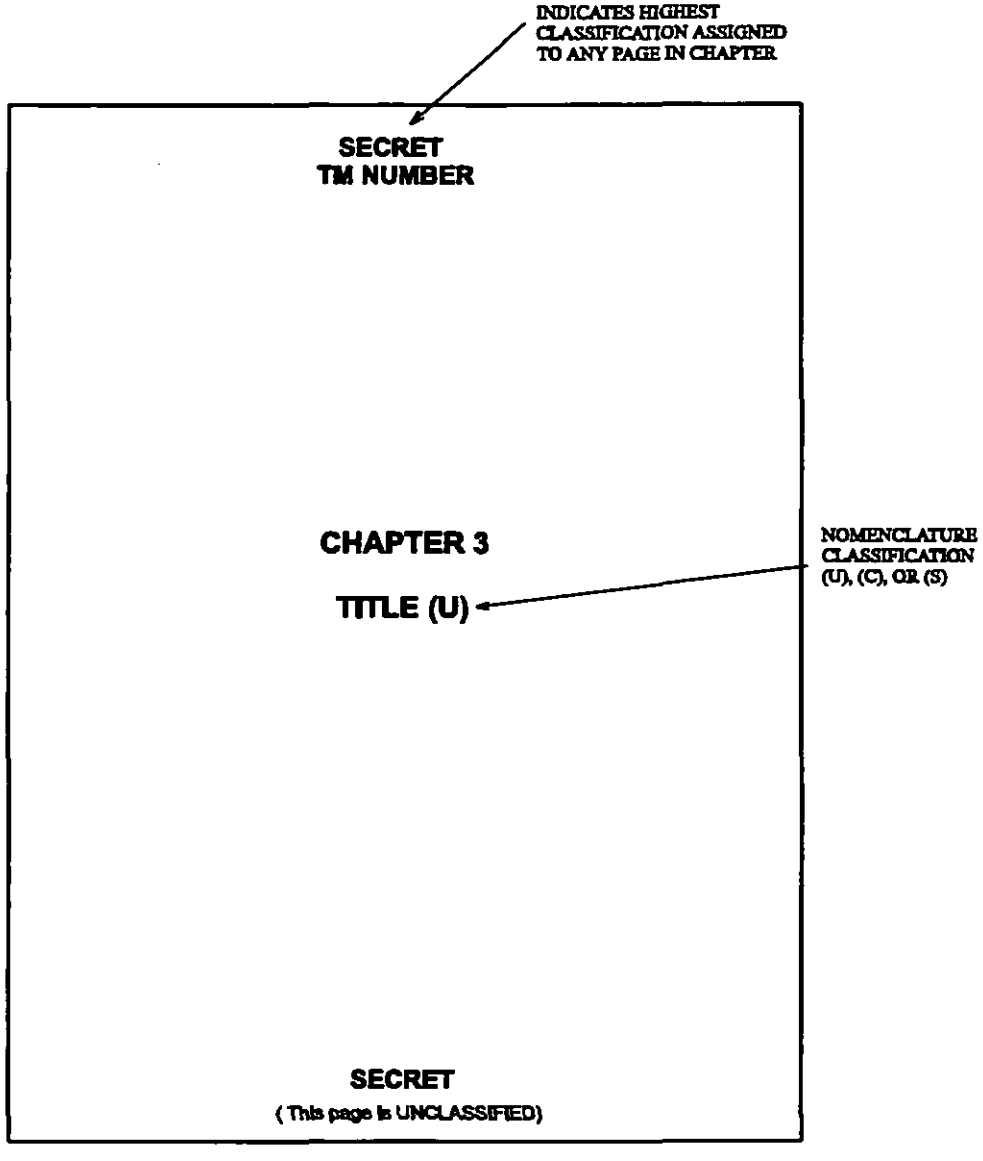

FIGURE 54. Example of security classification markings for chapter title page.

Source: https://assist.dla.mil -- Downloaded: 2016-12-09T23:59Z
Check the source to verify that this is the current version before use.

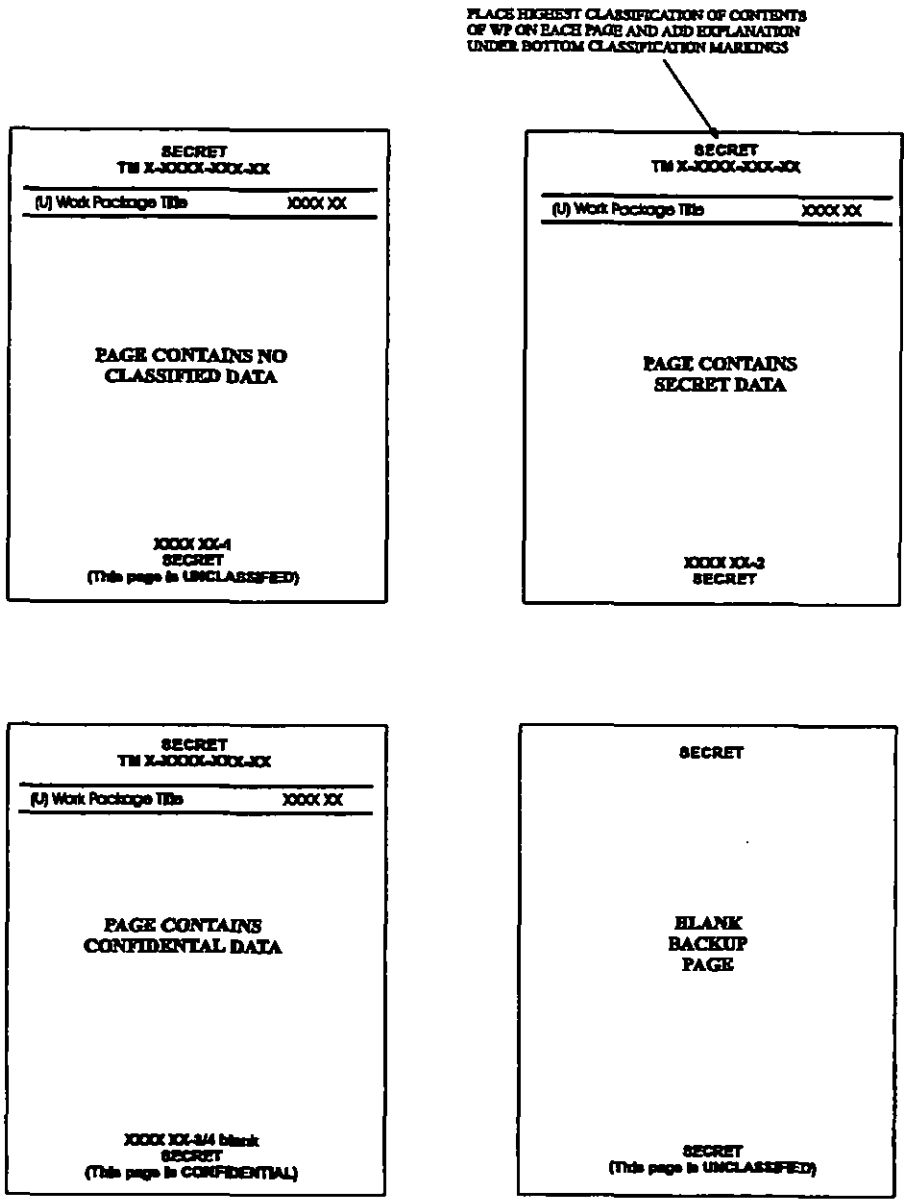

FIGURE 55. Example of security classification markings for work package.

Source: https://assist.dla.mil Downloaded: 2016-12-09T23:59Z
Check the source to verify that this is the current version before use.

UNCLASSIFIED

TM 3-6665-339-10

TABLE OF CONTENTS

WP Sequence No.

WARNING SUMMARY

HOW TO USE THIS MANUAL

CHAPTER 1 - INTRODUCTORY INFORMATION WITH THEORY OF OPERATION

General Information 0001 00
Equipment Description and Data 0002 00
Introduction 0003 00
Powerpack Theory of Operation 0004 00
Fuel System Theory of Operation 0005 00
Electrical System Theory of Operation 0006 00
Hydraulic System Theory of Operation 0007 00
Amphibious System Theory of Operation 0008 00
Bilge Pumps and Drain Valves Theory of Operation 0009 00
Fire Extinguisher System Theory of Operation 0010 00

CHAPTER 2 - OPERATOR INSTRUCTIONS

Description and Use of Controls and Indicators 0019 00
Operate Intercom 0020 00
Operate NBC Collective Protection System (Operate Microclimatic System And M42 Mask) 0021 00
Operate Domelight 0022 00
Operate Portable Fire Extinguisher 0023 00
Enter Driver's Ststion 0024 00
Adjust Seat, Safety Belt, and Mirrors 0025 00
Power Up Hull Systems 0026 00
Install Periscopes 0027 00
Operate Ballistic Shield 0028 00

i

UNCLASSIFIED

FIGURE 56. Example of security classification markings for pages.

Source: https://assist.dla.mil -- Downloaded: 2016-12-09T23:59Z
Check the source to verify that this is the current version before use.

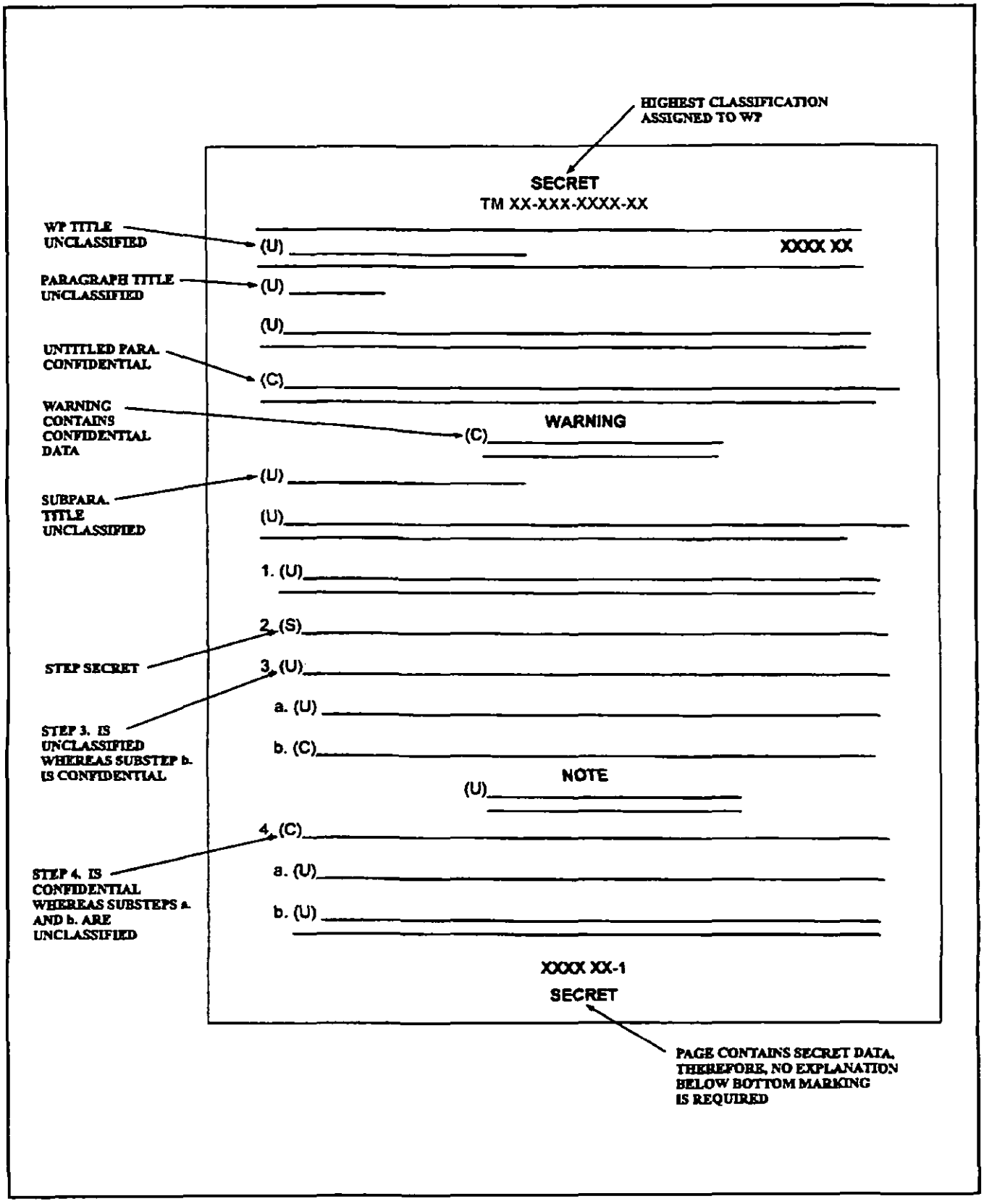

FIGURE 57. Example of security classification markings for paragraphs.

Source: https://assist.dla.mil Downloaded: 2016-12-09T23:59Z
Check the source to verify that this is the current version before use.

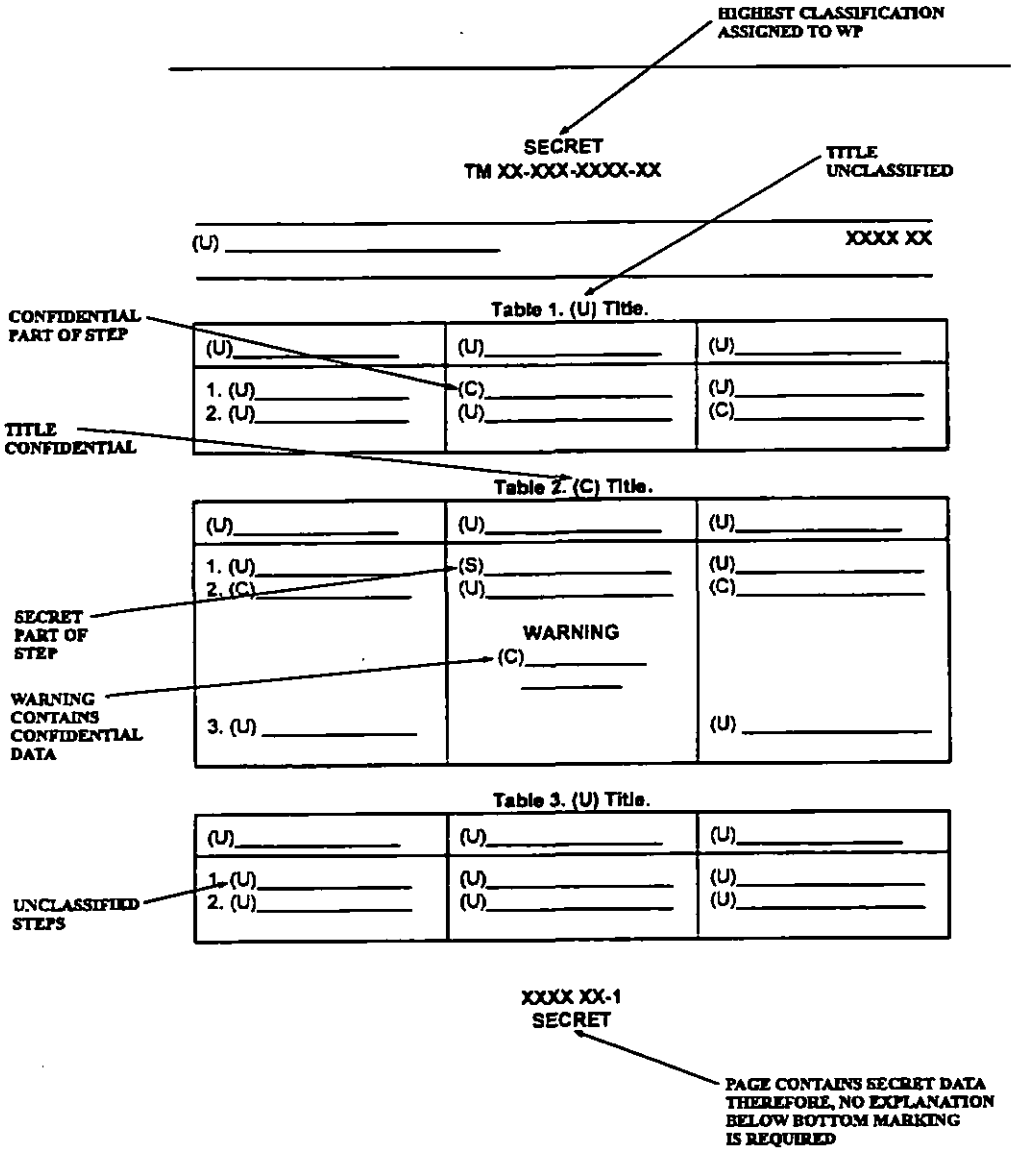

FIGURE 58. Example of security classification markings for tables.

Source: https://assist.dla.mil -- Downloaded: 2016-12-09T23:59Z
Check the source to verify that this is the current version before use.

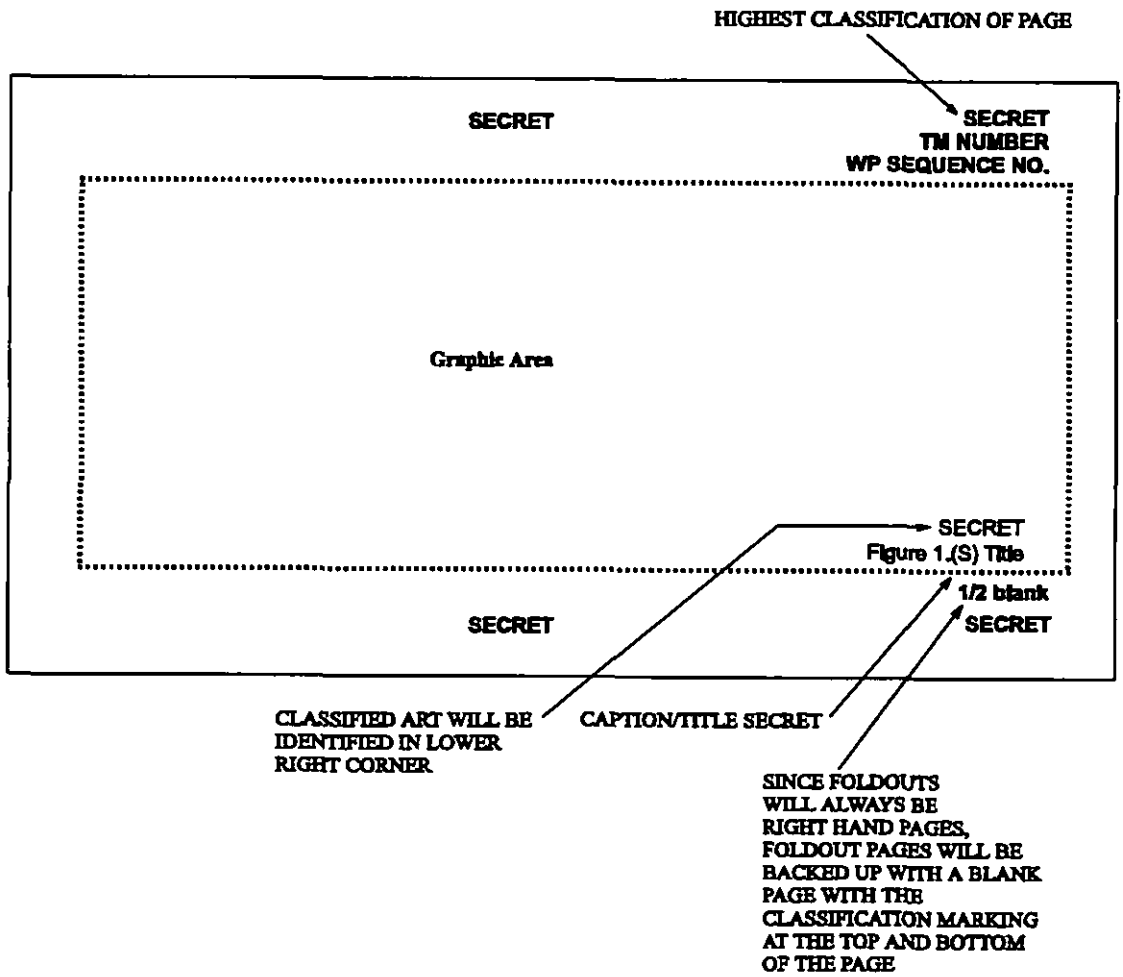

FIGURE 59. Example of security classification markings for illustrations.

Source: https://assist.dla.mil -- Downloaded: 2016-12-09T23:59Z
Check the source to verify that this is the current version before use.

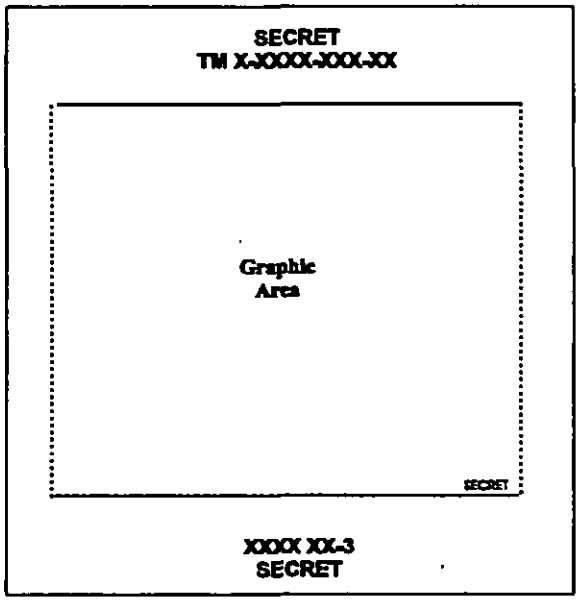

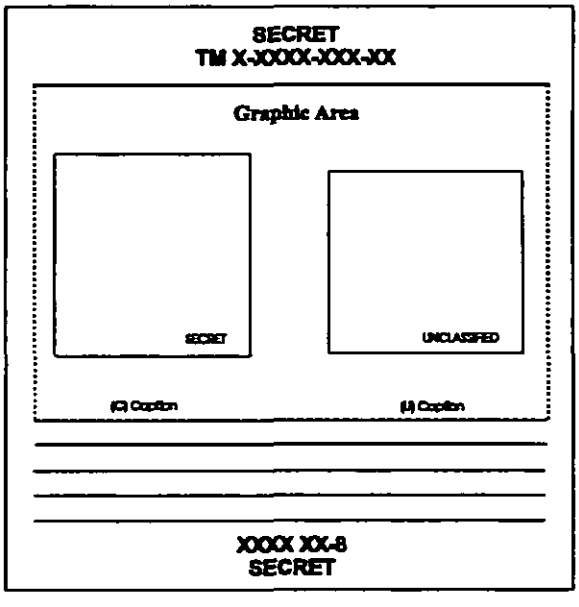

FIGURE 59. Example of security classification markings for illustrations - Continued.

Source: https://assist.dla.mil -- Downloaded: 2016-12-09T23:59Z
Check the source to verify that this is the current version before use.

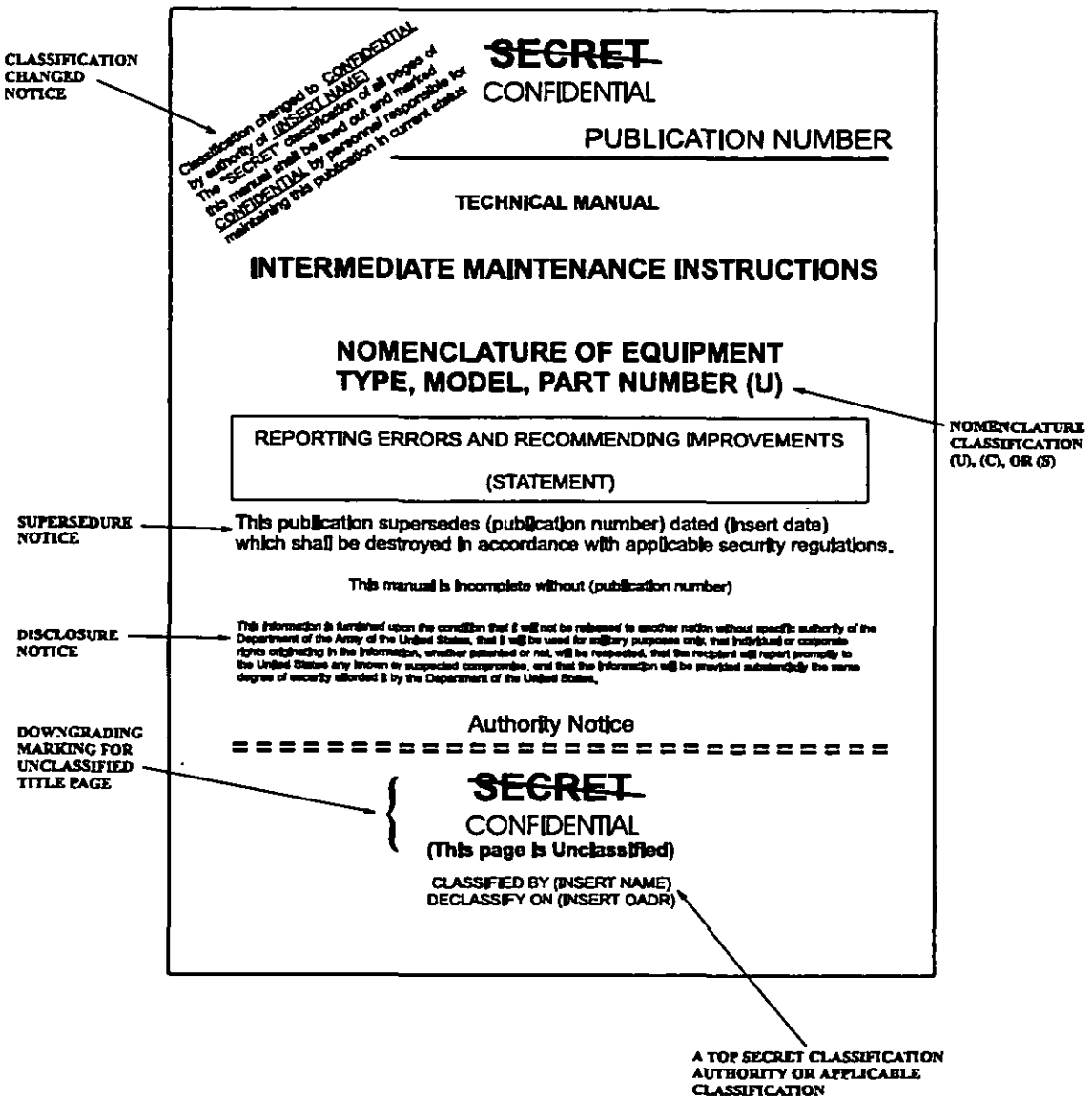

FIGURE 60. Example of a downgrading notice on title block page.

Source: https://assist.dla.mil Downloaded: 2016-12-09T23:59Z
Check the source to verify that this is the current version before use.

THESE MARKINGS WILL REMAIN ON TITLE PAGE UNTIL PUBLICATION IS REVISED

~~CONFIDENTIAL~~

Classification Change to UNCLASSIFIED by authority of _____ _____ The classification of all pages of this manual shall be lined out by personnel responsible for maintaining the publication in current status.

PUBLICATION NUMBER

TECHNICAL MANUAL

INTERMEDIATE MAINTENANCE INSTRUCTIONS

NOMENCLATURE OF EQUIPMENT TYPE, MODEL, PART NUMBER (U)

NOMENCLATURE CLASSIFICATION (U), (C), OR (S)

REPORTING ERRORS AND RECOMMENDING IMPROVEMENTS

(STATEMENT)

This publication supersedes (publication number) dated (insert date) which shall be destroyed in accordance with applicable security regulations.

This manual is incomplete without (publication number)

This information is furnished upon the condition that it will not be released to another nation without specific authority of the Department of the Army of the U[illegible] rights originating in the information [illegible] the United States any loss or [illegible] degree of security afforded it by the Department of the United States.

REPLACE WITH DISTRIBUTION STATEMENT

[illegible] ity, that individual or corporate recipient will report promptly to [illegible] provided [illegible] the same

Authority Notice

= = = =

APPENDIX A

SAMPLING PLAN FOR INSPECTION OF TECHNICAL MANUALS AND READING GRADE LEVEL MEASURES

A.1 SCOPE.

A.1.1 Scope. This appendix provides a uniform sampling plan which may be used for surveying for Reading Grade Level (RGL) or comprehensibility for in-process reviews, validation, etc. Sampling is not to be used for conduct of verifications. It also provides useful quantitative measures for three characteristics contributing to comprehensibility of text, namely, number of syllables, words, and sentences. This appendix contains a method for calculating the Reading Grade Level (RGL) for Technical manuals (TMs) or portions thereof. Calculating RGL may be performed using computer technology, whenever possible.

A.2 APPLICABLE DOCUMENTS.

This section is not applicable to this appendix.

A.3 DEFINITIONS.

This section is not applicable to this appendix.

A.4 GENERAL REQUIREMENTS.

This section is not applicable to this appendix.

A.5 DETAILED REQUIREMENTS.

A.5.1 Sampling plan for inspection. Sampling inspection in quality conformance is an acceptable practice to ascertain conformance to requirements. A sampling plan is appropriate when the number of characteristics to be checked makes 100 percent evaluation excessively time consuming and costly for the TM being inspected. Simple random sampling of pages is not an adequate method as a TM is not a homogeneous mass and different tests require different types and amounts of sample material. The plan presented here uses a mixture of random sampling by type of material and scanning by the reviewer to detect instances of nonconformance.

A.5.1.1 Derivation of samples. Samples to be tested are obtained as a result of the processes of A.5.1.1.1 and A.5.1.1.2.

A.5.1.1.1 Critical scanning. The purpose of critical scanning by the reviewer is to locate instances of suspected nonconformance for specific testing. Each page of the entire TM should be scanned for obvious nonconformance with a requirement of this standard; appropriate tests should then be applied to that material.

A.5.1.1.2 Systematic sampling. The purpose of systematic sampling is to provide semirandom samples of different types of material throughout the Technical Manual (TM) for detailed examination and testing. Different tests require different types and amounts of sample material. In general, the method of deriving samples is to identify a number of equally spaced break pages and to define sample material with reference to these break pages. (Refer to A.5.1.6.)

Source: https://assist.dla.mil -- Downloaded: 2016-12-09T23:59Z
Check the source to verify that this is the current version before use.

A.5.1.2 Applicable tests. Sample material is to be examined or tested in detail for conformance with the requirements of this standard. In most instances, the nature of the tests is implicit in the statement of the requirements. This is not the case for RGL requirements (Refer to 8.1 and 8.2). Additional detail is provided in A.5.2.

A.5.1.3 Extended local samples. Under the assumption that the material surrounding an instance of nonconformance has a higher probability of containing more such instances, extended local sampling provides additional sample material for examination. (Refer to A.5.1.7.)

A.5.1.4 Validation of readability. Narrative text is to be validated for conformance to the RGL as specified by the acquiring activity. If the Overall Grade Level (OGL) (including tolerance) is exceeded, the TM needs to be rewritten as required to meet the specified RGL. If a sample Grade Level (GL) is exceeded, the entire text surrounding each sample is to be rewritten as required.

A.5.1.5 Critical scanning. Each page of the TM should be scanned by the reviewer. Grounds for suspected nonconformance include, but are not limited to, the criteria of A.5.1.5.1 through A.5.1.5.3.

A.5.1.5.1 Scanning criteria for procedures. Scanning criteria for procedures are as follows.

a. Procedural step does not begin with a verb.

b. Procedural step is in negative form (i.e., do not ...).

c. Procedural steps are prefaced by an unnecessary lead-in which merely duplicates the title.

d. Procedure is not prefaced by relevant introductory information (i.e., initial setup) such as personnel required, special tools, test equipment, etc.

A.5.1.5.2 Scanning criteria for nonprocedural text. Scanning criteria for nonprocedural text are as follows.

a. Sentence(s) seem excessively long.

b. There is no topic sentence.

c. There are procedures in nonprocedural text.

A.5.1.5.3 Scanning criteria for illustrations and tables. Scanning criteria for illustrations and tables are as follows.

a. Portions of image area appear cluttered in the following circumstances.

(1) Too many symbols on a functional or schematic diagram.

(2) Too many line intersections on a functional, wiring, or piping diagram.

(3) Too many lines on a graph.

b. Print seems too small.

c. Callouts are hard to distinguish; arrangement or placement of callouts appears unacceptable.

Source: https://assist.dla.mil -- Downloaded: 2016-12-09T23:59Z
Check the source to verify that this is the current version before use.

d. Inputs are not at the left or top or outputs are not the at right or bottom on a functional or schematic diagram.

e. Signal flow does not read from left to right or feedback/return flow from right to left on a functional or schematic diagram.

f. Signal flow direction is not indicated by arrows on a functional or schematic diagram.

g. Locator view is required.

h. Table appears crowded — no aids for staying in correct row or column.

I. Illustration/table is not located close to the text where referenced.

j. Referenced table has no title.

k. Exploded view has no axis lines.

A.5.1.6 Systematic sampling.

A.5.1.6.1 Identifying break pages. Break pages are pages that are equally spaced throughout the TM beginning with a randomly selected page. They are used as reference points to develop different types of samples as described in subsequent paragraphs.

a Count the number of pages of text or illustrations (or whatever is being sampled) in the TM. The count should include all full and partial pages that contain the item to be sampled. Record the number of pages.

b. The basic number of samples is determined by the following:

		Basic No. of Samples	
No. of Pages	Divided by "N"	Min.	Max.
90 and above	10	9	30
54 to 89	9	6	9
32 to 53	8	4	6
1 to 31	6	2	4

c. Divide the number of pages by the appropriate divisor, "N." Round off the quotient to the next lowest whole number. For example, quotients of 17.3 and 17.7 are both rounded off to 17. This quotient will equal the basic number of samples to be analyzed.

d. For TMs of less than 12 pages, randomly select two samples and mark them for analysis.

e. For TMs of 12 pages or more, randomly select a number between one and "N." The number selected is to be marked as the first page to be analyzed. Starting at the selected page, mark every "Nth" page to the end of the TM. The marked pages will identify approximate starting points for the basic samples to be analyzed.

f. Check marked pages to verify that at least one sample has been selected for each information module of the TM. If any information module has been missed, randomly select one page from that

Source: https://assist.dla.mil -- Downloaded: 2016-12-09T23:59Z
Check the source to verify that this is the current version before use.

information module and add it to the basic samples to be analyzed. Ensure that the portion sampled represents the type of text (or whatever) that makes up the majority of the information module (i.e., a procedure versus descriptive text).

A.5.1.6.2 Samples of procedural text. Beginning with each break page, the first complete procedure and subsequent complete procedures as needed are to be selected until the total number of procedural steps exceeds 20. For suspected nonconformance identified by critical scanning, the above sampling process is to be applied beginning with the suspected procedure.

A.5.1.6.3 Samples of nonprocedural text.

A.5.1.6.3.1 Calculation of RGL. Beginning with each break page, at least two hundred words should be sampled. For suspected nonconformance identified by critical scanning, material is selected as above, but begins with the suspected paragraph.

A.5.1.6.3.2 Other tests on nonprocedural text. Six-page samples beginning with each break page should be selected. For each instance of suspected nonconformance identified by critical scanning, a six-page sample surrounding each suspected instance should be selected.

A.5.1.6.4 Samples of illustrations and tables. A sample of each different type of illustration and a sample of each table needs to be obtained.

A.5.1.6.4.1 Sampling method for illustrations. Beginning with each break page, the first example encountered of each illustration type is to be selected (ignoring those already selected when text was sampled), no matter where in the TM it occurs. The intent of this procedure is to generate a sample for each illustration type no larger than the number of break pages and to sample each illustration type adequately, whether they are spread out through the TM or are clustered together.

A.5.1.6.4.2 Tables. A sample of tables is to be selected by the same method.

A.5.1.7 Extended local samples.

A.5.1.7.1 Procedural text. Material in the vicinity of a confirmed instance of nonconformance is to be checked for similar nonconformance, using the two procedures immediately before the nonconforming procedure and the two procedures immediately following. If three or more of the five procedures are nonconforming, the entire information module may be suspected of nonconformance and measures to correct it implemented.

A.5.1.7.2 Nonprocedural text.

A.5.1.7.2.1 Samples for RGL calculation. If nonconformance is found, RGL should be calculated from the three pages before and three pages following the nonconforming material using the method of Appendix B. If two or more of the three samples are nonconforming, the entire information module may be suspected of nonconformance and measures to correct it implemented.

A.5.1.7.2.2 Other tests on nonprocedural text. If nonconformance is found, material in the two six-page samples immediately adjacent to the nonconforming sample should also be tested for conformance. If two or more of the three samples are nonconforming, the entire information module may be suspected of nonconformance and measures to correct it implemented.

Source: https://assist.dla.mil -- Downloaded: 2016-12-09T23:59Z
Check the source to verify that this is the current version before use.

A.5.1.7.3 Illustrations and tables. Material in the vicinity of a confirmed instance of nonconformance is to be checked for similar nonconformance, using two examples of the same illustration type or table immediately before the nonconforming one and two examples immediately following it. All illustrations and tables in the information module should be rescanned for potential nonconformance of all kinds.

A.5.1.8 Special cases of sampling.

A.5.1.8.1 Short TMs. If there are fewer than six pages between break pages, use as samples all material between break pages instead of six-page samples previously specified.

A.5.1.8.2 Material already sampled. For any particular test, if the material has already been sampled, the test results already obtained will be used.

A.5.1.8.3 Availability of material. If the amount of material called for does not exist, all available material is to be used.

A.5.2 Reading grade level measures.

A.5.2.1 Counts for narrative text. For each sample marked, raw data must be collected. Data collection will consist of counts of the numbers of words, sentences, and syllables in each sample. The size of the sample is based on the number of words to be analyzed. Samples will start at the beginning of the first full paragraph on each marked sample page. If a sample falls on a page containing procedural instructions, start the sample at the beginning of the first full sentence on the page.

A.5.2.1.1 Words. For each sample, count all words up to the end of the sentence containing the 200th word. If the marked sample page is less than 200 words, the sample can be extended to the next page of text; but, do not extend the sample into a new information module or text pertaining to a completely new subject. Record the number of words in each sample.

A.5.2.1.2 Sentences. Count all sentences in the sample including the sentence that contains the 200th word. Record the number of sentences in each sample.

A.5.2.1.3 Syllables. Count syllables the way the word is normally pronounced aloud. Count all numbers as one syllable. For example, 5.1, 65, and 300 each count as one syllable. However, if a numeric expression contains several numbers separated by hyphens, count each number as a syllable. For example, the expression 9-1025-240-10 is counted as four syllables. Acronyms and abbreviations are counted as one syllable unless they actually spell out a word of more than one syllable. For example, Hz and DVM each count as one syllable, but TRADOC and ATCOM each count as two syllables. Record the number of syllables in each sample.

A.5.2.2 Automatic counting equipment. Devices for obtaining keystroke, word, and sentence counts automatically as text is input may be used. Keystroke counts will then substitute for syllable counts.

A.5.2.3 Calculation of RGL. Automated equipment and software may be used to calculate RGL provided the computation meets the requirements of this document.

A.5.2.3.1 Overall grade level. The Overall Grade Level (OGL) of a TM is calculated as follows:

a. Add the total number of words (W) from all samples combined. Record total.

Source: https://assist.dla.mil -- Downloaded: 2016-12-09T23:59Z
Check the source to verify that this is the current version before use.

b. Add the total number of sentences (S) from all samples combined. Record total.

c. Add the total number of syllables (P) from all samples combined. Record total.

d. Calculate the average sentence length (A). Divide the total number of words (W) by total number of sentences (S): (A = W/S). Round off quotient to the nearest one hundredth. Record quotient.

e. Calculate the average number of syllables per word (B). Divide total number of syllables (P) by total number of words (W): (B = P/W). Round off quotient to the nearest one hundredth. Record quotient.

f. Calculate the OGL of the TM by the following formula. Round off the OGL to the nearest integer.

$$OGL = 0.39(A) + 11.8(B) - 15.59$$

SAMPLE COMPUTATIONS TO DEMONSTRATE USE OF FORMULAS

Sample	Total No. Words	Total No. Sentences	Total No. Syllables
1	250	30	500
2	220	35	475
3	245	28	420
4	223	22	400
5	256	32	510
6	215	27	398
7	219	26	395
8	230	30	400
9	225	29	380
10	226	28	370
10	W=2309	S=287	P=4248

A = W/S	A = 2309/287	A = 8.05
B = P/W	B = 4248/2309	B = 1.84

$$OGL = 0.39(A) + 11.8(B) - 15.59$$
$$OGL = 0.39(8.05) + 11.8(1.84) - 15.59$$
$$OGL = 3.14 + 21.71 - 15.59$$
$$OGL = 9$$

A.5.2.3.2 Sample grade levels. Calculate the Grade Level (GL) of each sample as follows,

a. Calculate the average sentence length (L). Divide the number of words (V) in the sample by the number of sentences (T) in the sample: (L = V/T). Round off quotient to the nearest one hundredth.

b. Calculate the average number of syllables per word (D). Divide the number of syllables (C) in the sample by the number of words (V) in the sample: (D = C/V). Round off quotient to the nearest one hundredth.

c. Calculate the GL of each sample by the following formula. Round off each GL to the nearest integer.

Source: https://assist.dla.mil -- Downloaded: 2016-12-09T23:59Z
Check the source to verify that this is the current version before use.

$GL = 0.39(L) + 11.8(D) - 15.59$

SAMPLE COMPUTATIONS TO DEMONSTRATE USE OF FORMULAS

Sample	Total No. Words	Total No. Sentences	Total No. Syllables
1	V1 = 250	T1 = 30	C1 = 500
2	V2 = 220	T2 = 35	C2 = 475
L1 = V1/T1	L1 = 250/30	L1 = 8.33	
D1 = C1/V1	D1 = 500/250	D1 = 2	
L2 = V2/T2	L2 = 220/35	L2 = 6.29	
D2 = C2/V2	D2 = 475/220	D2 = 2.16	

$GL1 = 0.39(L1) + 11.8(D1) - 15.59$
$GL1 = 0.39(8.33) + 11.8(2) - 15.59$
$GL1 = 3.25 + 23.6 - 15.59$
$GL1 = 11$

$GL2 = 0.39(L2) + 11.8(D2) - 15.59$
$GL2 = 0.39(6.29) + 11.8(2.16) - 15.59$
$GL2 = 2.45 + 25.49 - 15.59$
$GL2 = 12$

A.5.2.4 Manual counting technique. Obtaining accurate word and syllable counts rapidly can be aided by using a push-button operated counting device while reciting the text aloud. Certain hand-held electronic calculators can be used in this way.

Source: https://assist.dla.mil -- Downloaded: 2016-12-09T23:59Z
Check the source to verify that this is the current version before use.

INDEX

	PARAGRAPH	PAGE
Abbreviations	5.3.1	38
	6.3.15.1	48
	A.5.2.1.3	153
Acquiring Activity	3.2.1	5
Acronyms	3.1	3
	5.3.1	38
	A.5.2.1.3	153
Adjust	3.2.2	5
Advertising	4.7.3	17
Align	3.2.3	5
American National Standards Institute (ANSI)	3.2.4	5
Appendix	A	149
Applicability	1.2	1
Applicable Documents	2	1
	A.2	149
Army Master Data File (AMDF)	3.2.5	5
Assembly	3.2.6	5
Auxiliary equuipment	3.2.7	5
Aviation Intermediate Maintenance (AVIM)	3.2.8	5
	4.1	15
Aviation Unit Maintenance (AVUM)	3.2.9	6
	4.1	15
Basic Issue Items (BII)	3.2.10	6
	4.8.1	17
Basis of Issue (BOI)	3.2.11	6
Block Diagram	3.2.12	6
Border rules and boxes	6.2.1	42
Built-in Test Equipment (BITE)	3.2.13	6
Calibrate	3.2.14	6
Callouts	3.2.15	6
	5.2.10	32
	6.1.2.1	41
	6.2.4	42
	6.3.10	47
Calculation of RGL	A.5.1.6.3.1	152
	A.5.2.3	153
CALS raster	3.2.16	6
	3.2.33	8
	6.3.1	45
Cartoons	6.3.14	48
Caution	3.2.17	6
	5.2.7	30
	5.2.10	32
	9.7	62
Charts	6.3.15.17	56

Source: https://assist.dla.mil -- Downloaded: 2016-12-09T23:59Z
Check the source to verify that this is the current version before use.

INDEX

	PARAGRAPH	PAGE
Classification	5.2.10	32
	9	61
	10.2	64
Commercial and Government Entity Code (CAGEC)	3.2.18	6
Commodity Command Standard System (CCSS)	3.2.19	6
Complete part number	3.2.20	6
Comprehensibility	3.2.22	7
	8	59
	A.1.1	149
Computer Graphics Metafile (CGM)	3.2.24	7
	3.2.33	8
	6.4	57
Continuous Acquisition Life-cycle Support (CALS)	3.2.23	7
	6.4	57
Continuous tone drawings	3.2.25	7
Continuous tone photographs	3.2.25	7
Copy freeze date	3.2.26	7
Copyright	4.7	17
	6.3.14	48
Counts	A.5.2.1	153
	A.5.2.2	153
	A.5.2.4	155
Credit lines	6.2.3	42
Data Item Description (DID)	3.2.28	7
Date	3.2.26	7
	3.2.27	7
	5.2.10	32
	7.1.2	58
	7.1.3	58
	7.2.1	58
	9.9.1	62
Declassification procedures	9.9.3	63
Definitions	3	3
	A.3	149
Department of Defense (DoD)	3.2.29	7
Department of Defense Index of Specifications and Standards (DODISS)	2.2.1	1
	3.2.30	7
Depot Maintenance Work Requirement (DMWR)	3.2.32	7
Detailed requirements	5	25
	A.5	149
Designations	6.3.15.2	48
Development of work package technical manuals	4.8	17
Diagrams	6.3.15	48-56
Block	6.3.15.5.2	52
Cable	6.3.15.14.1	54
Cutaway	6.3.15.7	53
Functional	6.3.15.5.2	52

Source: https://assist.dla.mil -- Downloaded: 2016-12-09T23:59Z
Check the source to verify that this is the current version before use.

INDEX

	PARAGRAPH	PAGE
General methods	6.3.15.3	48
Logic	6.3.15.8	53
Page size multisheet	6.3.9	46
Partial	6.3.15.10	53
Pictorial	6.3.15.6	52
Piping	6.3.15.15	56
Power distribution	6.3.15.12	53
Pyramid	6.3.15.13	53
Schematic	6.3.15.1	48
Simplified	6.3.15.9	53
Test	6.3.15.11	53
Wiring	6.3.15.14.2	55
Digitized artwork	6.5.1.3	57
Digital graphics forms	3.2.33	8
Direct Support Maintenance	3.2.34	8
Disassemble	3.2.35	8
Document Type Definition (DTD)	3.2.36	8
Downgrading procedures	9.9.2	62
Drafting practices	6.3.15.1	48
Drawings	3.2.10	6
	3.2.18	6
	3.2.25	7
	6.1.2.5	42
	6.3.4	45
	6.3.6	46
	6.3.15.1	48
	6.5.1	57
Electronic items	6.3.15.16	56
Electrostatic discharge (ESD) sensitive acronym	6.1.2.5	42
Equations	5.2.10	35
	5.3.2	38
Equipment Improvement Recommendation (EIR)	3.2.37	8
Expendable items	3.2.38	8
Figure numbering	5.2.6.1	29
	5.2.6.3	30
Figure number placement	5.2.6.2	29
Figure titles	5.2.6.4	30
Figure title placement	5.2.6.2	29
Figures	5.2.6	29
	5.2.10	35
	6.1.2.5	42
Figures contained in this handbook	4.6	16
Final Reproducible Copy (FRC)	3.2.39	8
	6.3.4	46

Source: https://assist.dla.mil -- Downloaded: 2016-12-09T23:59Z
Check the source to verify that this is the current version before use.

INDEX

	PARAGRAPH	PAGE
Foldout	5.2.6.1	29
	5.2.6.2	29
	5.2.9	32
	6.3.1	45
	6.3.5	46
	6.3.9	46-47
	6.3.15.5.2	52
	6.3.15.14.2	55
Footer	3.2.40	8
	3.2.67	10
Footnotes to tables	5.2.5.5	28
Format	3.2.41	8
	3.2.49	9
	3.2.115	15
	4.3	16
	4.4	16
	4.6	16
	5	25
	6.1.1	41
	7.1.1	58
	7.2	58
Formatting Output Specification Instance (FOSI)	3.2.41	8
	4.9.4	24
Functional Group Code (FGC)	3.2.43	9
Functional Diagram	3.2.42	8
	6.3.15.5.2	52
General	2.1	1
	4.1	15
	5.1	25
	6.3.15.3	50
	9.1	62
	A.4	151
General support maintenance	3.2.44	9
Government documents	2.2	1
	2.2.2	2
Grade Level (GL)	3.2.45	9
	A.5.2.3.2	154
Grammar, Standard English	8.4	59
Graphic size options	6.1.2.3	43
Graphics	3.2.46	9
	6	41
	6.4	58
Halftones	3.2.47	9
Handbooks	2.2.1	1
	3.2.4	5
Hazardous materials warnings with icons	5.2.8	31

Source: https://assist.dla.mil -- Downloaded: 2016-12-09T23:59Z
Check the source to verify that this is the current version before use.

INDEX

	PARAGRAPH	PAGE
Header	3.2.48	9
	3.2.67	11
	5.2.10	33
Horizontal format	3.2.49	9
How to develop a work package TM	4.9	20
Human figure, use of	6.2.2	42
Icon	3.2.50	9
	5.2.7.1	30
	5.2.8	31-32
Identification numbers	4.9.3.1	24
	6.2.10	46
Illustration	3.2.52	9
	5.2.6	30
	5.2.11	38-39
	6.2	43-45
	6.3	46
	6.5.1	58
	7.2.3	59
Charts	6.3.15.17	56
Color	6.2.9	44
Combination	6.5.1.4	57
Detail views	6.3.12	48
Exploded views	6.3.11	48
Foldout	6.3.9	46
Graphs	6.3.15.17	56
Legends	6.2.8	45
Locator views	6.3.11	48
Markings	9.8	63
Multiple tasks	5.2.11.5	38
Multisection	6.3.7	46
Multisheet	6.3.9	46
Multiview	6.3.8	46
Placement options	5.2.11.4	38
Preparation	6.1	42
Procedures	6.3.1	46
Repeating	5.2.11.6	38
Size	6.1.2	42
Special tools and test equipment	6.3.3	46
Style and format preparation	6.1.1	42
Tool and test equipment	6.3.2	45
Index letters	3.2.53	10
Index numbers	3.2.53	10
	6.2.4.1	43

Source: https://assist.dla.mil -- Downloaded: 2016-12-09T23:59Z
Check the source to verify that this is the current version before use.

INDEX

	PARAGRAPH	PAGE
Initial Graphics Exchange Specification (IGES)	3.2.33	8
	3.2.51	9
	6.4	58
Inspect	3.2.54	10
Institute of Electrical and Electronics Engineers (IEEE)	3.2.55	10
Intended Use	10.1	65
International Organization for Standardization (ISO)	3.2.56	10
Introductory information with theory of operation	4.8.3	18
Landscape mode	3.2.57	10
Lead-in	8.6.1	61
Leader lines and arrowheads	6.2.7	45
Legend	3.2.58	10
	5.2.6.5	30
Letter size	6.1.2.4	43
Line drawings	6.5.1.1	57
Line Replacement Unit (LRU)	3.2.59	10
Lists	5.2.5	27
	5.2.5.8	29
Load limit	3.2.60	10
Locator views	6.3.11	49
Logic functions, symbols	6.3.15.1	48
Logic tree	3.2.61	10
Logistics Support Analysis (LSA)	3.2.62	10
	4.8.1	17
Lubricant	3.2.63	10
Maintenance Allocation Chart (MAC)	3.2.64	10
	4.8.8	19
Maintenance instructions	4.8.2	17
	4.8.6	19
Maintenance level	3.2.65	10
	5.2.10	33
Maintenance step	3.2.66	11
Major divisions	5.2.1	25
Manual counting technique	A.5.2.4	155
Marginal copy	3.2.67	11
Military terms	8.3.4	61
Narrative, nonprocedural text	8.5	60
National Item Identification Number (NIIN)	3.2.68	11
National Stock Number (NSN)	3.2.69	11
Neutral terms	8.3.3	61
Next Higher Assembly (NHA)	3.2.70	11
Nomenclature	3.2.71	11
	5.2.10	33
	6.2.6	44
	8.3	60
Nomenclature consistency and applicability	8.3.1	60

Source: https://assist.dla.mil -- Downloaded: 2016-12-09T23:59Z
Check the source to verify that this is the current version before use.

INDEX

	PARAGRAPH	PAGE
Non-Government publications	2.3	2
Note	3.2.72	11
	5.2.7	30
	5.2.10	33
	8.6.3	62
	9.7	63
	9.9.2	64
	10	65
Operator instructions	4.8.2	17
	4.8.4	18
Operator maintenance	3.2.73	11
Order of Precedence	2.4	3
Orphan	3.2.74	11
	5.2.11.1	38
Other Government documents and publications	2.2.2	2
Outline, TM	4.9	20
	4.9.2	22
Overall Grade Level (OGL)	3.2.75	11
	A.5.2.3.1	155
Overhaul	3.2.76	11
Page sizes	5.2.9	32
Paragraphs	5.2.3	25
	9.1	62
	9.7	63
	9.9.3	64
Part Number (P/N)	3.2.77	11
Phantom	3.2.78	11
	6.2.4.1	44
	6.3.15.6	53
Photographs	3.2.25	7
	6.3.5	47
	6.3.13	49
	6.5.1	58
	9.8	63
Pictorial	3.2.50	9
	3.2.79	12
	6.3.15.6	53
	6.3.15.11	54
Portrait mode	3.2.80	12
Portraying signal flow	6.3.15.4	51
Positive form	8.6.5	62
Pre-screening	3.2.81	12
	6.5.1.2	58
Preparation of TMs in digital format	4.3	16
Preventative maintenance	3.2.82	12

Source: https://assist.dla.mil -- Downloaded: 2016-12-09T23:59Z
Check the source to verify that this is the current version before use.

INDEX

	PARAGRAPH	PAGE
Preventive Maintenance Checklist (PMC)	3.2.83	12
Preventive Maintenance Checks and Services (PMCS)	3.2.84	12
Printing		
Using FOSI	4.9.4	24
Using style sheet	4.9.5	25
Procedural step levels	5.2.4.1	27
Procedural steps	5.2.2	25
	5.2.4	26
	5.2.5.4	28
	5.2.7	30
	5.2.11.1	38
	5.2.11.2	38
	8.6	61
	A.5.1.5.1	152
	A.5.1.6.2	154
Procedural text	5.2.10	33
	8.5	61
	8.6	61
	8.6.3	62
	A.5.1.5.2	152
	A.5.1.6.2	154
	A.5.1.6.3	154
	A.5.1.7.1	154
	A.5.1.7.2	154
Proprietary names	4.7.2	17
Punctuation	5.3.2.2	40
	8.4	61
Readability	3.2.85	12
	5.2.5.6	29
	A.5.1.4	152
Reading Grade Level (RGL)	3.2.86	12
	8.1	60
	A.1.1	151
Reading grade level measures	A.5.2	155
Reference designator	3.2.87	12
	5.2.10	33
	6.3.15.1	49
	6.3.15.16	57
Reliability, Availability, Maintainability (RAM)	3.2.88	12
Remove/install	3.2.89	12
Repair	3.2.21	7
	3.2.90	12

Source: https://assist.dla.mil -- Downloaded: 2016-12-09T23:59Z
Check the source to verify that this is the current version before use.

INDEX

	PARAGRAPH	PAGE
Repair part	3.2.19	7
	3.2.38	8
	3.2.69	11
	3.2.89	12
	3.2.91	12
	3.2.93	13
Repair Parts and Special Tools List (RPSTL)	3.1	3
	3.2.27	7
	3.2.92	13
	4.1	15
	4.8.2	17
	4.8.7	19
	6.3.10	48
Replace	3.2.93	13
Reprinting classified publications	9.10	64
Requirements for digital graphics files	6.4	58
Requirements for final reproducible copy	6.5	58
Revised front and rear matter pages	7.2.2	60
Revised work packages	7.2.1	59
Revision	3.2.94	13
	7	59-60
	9.9.2	64
	9.9.3	64
Revision format	7.2	59
Revision symbols	7.1.2	59
	7.1.3	59
	7.2.3	60
Revisions	7.1	59
Complete	7.1.3	59
Front matter	7.2.2	60
Pickup	7.1.2	59
Rear matter	7.2.2	60
Standard	7.1.1	59
RGL measurements	8.2	60
RPSTL figure numbering	5.2.6.3	30
RPSTL figures	6.2.5	44
Sampling plan for inspection	A.5.1	149
Scale	6.1.2.2	43
	6.1.2.4	43
	6.3.15.17.1	58
Scanned images, photographs	6.3.13	48
Scheduled maintenance	3.2.82	12
Schematic diagrams	3.2.95	13
	6.3.15.5.1	51
Scope	1	1
	5.2.10	33
	A.1	151

Source: https://assist.dla.mil -- Downloaded: 2016-12-09T23:59Z
Check the source to verify that this is the current version before use.

INDEX

	PARAGRAPH	PAGE
Selective application and tailoring	4.2	16
Sentence	3.2.96	13
	8.5	61
Sentences in procedures	8.6.4	62
Service	3.2.97	13
Short TMs	A.5.1.8.1	155
Signal connections	6.3.15.4.1	51
Signal difference	6.3.15.4.2	52
Signal junctions	6.3.15.4.3	52
Source, Maintenance, and Recoverability (SMR) code	3.2.98	13
Spacing	5.2.10	33
	5.3.2.6	42
Spare part	3.2.99	13
Special cases of sampling	A.5.1.8	155
Special tools	3.2.100	13
	4.8.3	18
Specialized Repair Activity (SRA)	3.2.101	13
Specification requirements	6.3.15.1	49
Specifications	2.2.1	1
	3.2.4	5
	3.2.30	7
	6.3.15.1	49
	6.3.15.2	49
Standard Generalized Markup Language (SGML)	2.3	2
	3.2.102	13
	4.3	16
Standard Generalized Markup Language (SGML) declaration	3.2.103	14
Standards	2.2.1	1
	3.2.4	5
	3.2.18	6
	3.2.30	7
Style	3.2.41	9
	4.4	16
	4.6	17
	4.9.5	25
	5	25-39
	5.3	38
	7.1.1	59
	7.2	59
	8.4	61
Subassembly	3.2.104	14
Subject term (key word) listing	10.2	65
Supersedure notice	7.2.4	60
Supporting information	4.8.2	17
	4.8.8	19
Syllables	A.5.2.1.3	155

Source: https://assist.dla.mil -- Downloaded: 2016-12-09T23:59Z
Check the source to verify that this is the current version before use.

INDEX

	PARAGRAPH	PAGE
Symbols	5.3.2.1	39
	6.3.15.1	49
	6.3.15.2	49
	6.3.15.5.3	53
Systematic sampling	A.5.1.1.2	151
	A.5.1.6	153
Table format	5.2.5.4	28
Table locations	5.2.5.1	27
Table numbering	5.2.5.2	28
Table readability and use	5.2.5.6	29
Table titles	5.2.5.3	28
Tables	5.2.5	27
	6.3.15.14	55
	6.3.15.16	57
	7.2.3	60
	9.1	62
	9.7	63
	9.9.3	64
	A.5.1.5.3	152
	A.5.1.6.4	154
	A.5.1.6.4.2	154
	A.5.1.7.3	155
Tabular information	5.2.5.7	29
Technical Manual Quality Assurance (TMQA) program	3.2.105	14
Technical Manuals (TMs)	3.2.106	14
Technical manuals developed in accordance with MIL-STD-40051	4.8.2	17
Terms, automatic electronic test and checkout	8.3.5	59
Test	3.2.107	14
	8.3.5	61
Test, Measurement, and Diagnostic Equipment (TMDE)	3.2.108	14
Test point identification symbols	6.3.15.5.3	53
Text	3.2.109	14
	5.2.10	32
	5.2.11	38
	7.2.3	59
	A.5.2.1	155
Text and related illustrations, placement of	5.2.11.2	37
Text and related illustrations for pocket TMs, placement of	5.2.11.2.1	37
Text formatting requirements	5.2.11.1	38
Text Wrapping	5.2.11.3	38
Top-down breakdown	3.2.110	14
Troubleshooting procedures	4.8.2	17
	4.8.5	18
Type sizes and styles	5.2.10	32
Types of work packages	4.8.1	17
Unit maintenance	3.2.11	6

Source: https://assist.dla.mil -- Downloaded: 2016-12-09T23:59Z
Check the source to verify that this is the current version before use.

INDEX

	PARAGRAPH	PAGE
User	3.2.112	14
Validation	3.2.39	8
	3.2.105	14
	3.2.113	14
	3.2.114	15
	A.5.1.4	152
Verification	3.2.39	8
	3.2.105	14
	3.2.114	15
Vertical TM format	3.2.115	15
Warning	3.2.116	15
	5.2.7	30
	5.2.8	31
	5.2.10	33
	9.7	63
Widow	3.2.117	15
	5.2.11.1	38
Wiring diagram	3.2.118	15
Wire list	6.3.15.14.3	57
Wiring and interconnection data	6.3.15.14	55
Word	3.2.119	15
	5.3.2.5	42
	8.5	61
	A.5.2.1.1	155
Work package identification numbers	4.9.3.1	24
Work Packages (WPs)	3.2.120	15
	5.2.2	25
Additional for a normal revision	6.5.1.4	57
Revised	7.2.1	58

Source: https://assist.dla.mil -- Downloaded: 2016-12-09T23:59Z
Check the source to verify that this is the current version before use.

CONCLUDING MATERIAL

Custodian:
Army - TM

Review Activities:
Army - AL, AR, AT, AV, CR, CU, EA, MI, PT, PC3

Preparing Activity:
Army - TM

Project Number:
TMSS A334

Source: https://assist.dla.mil -- Downloaded: 2016-12-09T23:59Z
Check the source to verify that this is the current version before use.

STANDARDIZATION DOCUMENT IMPROVEMENT PROPOSAL

INSTRUCTIONS

1. The preparing activity must complete blocks 1, 2, 3, and 8. In block 1, both the document number and revision letter should be given.
2. The submitter of this form must complete blocks 4, 5, 6, and 7.
3. The preparing agency must provide a reply within 30 days from receipt of the form.

NOTE: This form may not be used to request copies of documents, nor to request waivers, or clarification of requirements on current contracts. Comments submitted on this form do not constitute or imply authorization to waive any portion of the referenced document(s) or to amend contractual requirements.

I RECOMMEND A CHANGE	1. DOCUMENT NUMBER **MIL-HDBK-1222**	2. DOCUMENT DATE: *(YYMMDD)* **970409**

3. DOCUMENT TITLE
MILITARY HANDBOOK: GUIDE TO THE GENERAL STYLE AND FORMAT OF U.S. ARMY WORK PACKAGE TECHNICAL MANUALS

4. NATURE OF CHANGE (*Identify paragraph number and include proposed rewrite, if possible. Attach extra sheets as needed.*)

5. REASON FOR RECOMMENDATION

6. SUBMITTER

a. NAME (*Last, First, Middle Initial*)	b. Organization	
c. ADDRESS (*Include ZIP Code*)	d. TELEPHONE (*Includes Area Code*) (1) Commercial (2) AUTOVON (If applicable)	7. DATE Submitted (*YYMMDD*)

8. PREPARING ACTIVITY

a. NAME **USAMC Logistics Support Activity**	b. TELEPHONE (*Include Area Code*) (1) Commercial **(205) 955-9843** (2) AUTOVON **DSN 645-9843**
c. ADDRESS (*Include ZIP Code*) **ATTN: AMXLS-AP (TMSS)** **Redstone Arsenal, AL 35898-7466**	IF YOU DO NOT RECEIVE A REPLY WITHIN 45 DAYS, CONTACT: Defense Quality and Standardization Office 5203 Leesburg Pike, Suite 1403, Falls Church, VA 22041-3466 Telephone (703) 756-2340 AUTOVON 289-2340

Source: https://assist.dla.mil -- Downloaded: 2016-12-09T23:59Z
Check the source to verify that this is the current version before use.