PPP-P-704E
October 30, 1981
SUPERSEDING
Fed. Spec. PPP-P-704D
January 17, 1977

FEDERAL SPECIFICATION

PAILS, METAL: (SHIPPING, STEEL, 1 THROUGH 12 GALLONS)

This specification was approved by the Commissioner, Federal Supply Service, General Services Administration for the use of all Federal agencies.

1. SCOPE AND CLASSIFICATION

1.1 Scope. This specification covers new steel pails of 1 through 12 gallon capacities.

1.2 Classification.

1.2.1 Types and classes. Pails shall be furnished in the following types and classes, as specified (see 6.2).

Type I. Tight head pail (see figure 1)

Class	Gage	Applicable specification	Capacity available in gallons
1	28	DOT-37B	1 through 5
2	26	Rule 40, Item 260*	1 through 7
3	24	DOT-17E	1 through 5
4	24	DOT-17C or DOT-5B	1 through 5
5	26	DOT-37B	1 through 12
6	22	Rule 40, Item 260*	7 through 10
7	22	DOT-5	1 through 5

FSC 8110

Source: https://assist.dla.mil -- Downloaded: 2016-12-11T05:56Z
Check the source to verify that this is the current version before use.

Type I. Tight head pail (see figure 1) (cont'd)

Class	Gage	Applicable specification	Capacity available in gallons
8	22	DOT-17E	10
9	20	DOT-17C	1 through 10
10	20	DOT-5	1 through 10
11	20	Rule 40, Item 260*	1 through 12

* See Rule 40, NMFC, or Item 260, UFC for other than dry or solid articles.

Type II. Lug cover pail (see figure 2)

Class	Gage	Applicable specification	Capacity available in gallons
1	26	DOT-37A	1 through 5
2	28	Rule 40, Item 260*	1 through 4
3	24	DOT-37A	1 through 5
4	26	Rule 40, Item 260*	5 through 10
5	24	DOT-37A	6 through 10
6	24	Rule 40, Item 260*	1 through 12
7	24/20	DOT-17H	1 through 5
8	28/26	DOT-37C	1 through 5
9	28	DOT-37A	1 through 2
10	24	DOT-17C	1 through 5
11	20	DOT-17C	1 through 10

* See Rule 40, NMFC, or Item 260, UFC, for other than dry or solid particles.

Type III. Nesting lug cover pail (see figure 3 for 5 gallon capacity)

Class	Gage	Applicable specification	Capacity available in gallons
1	26	DOT-37A	1 through 5
2	28	Rule 40, Item 260*	1 through 4
3	24	DOT-37A	1 through 5
4	26	Rule 40, Item 260*	5 through 10
5	28/26	DOT-37C	1 through 5
6	22	DOT-37A	1 through 5
7	24	DOT-5B	1 through 5
8	22	DOT-5B	6 through 10

* See Rule 40, NMFC, or Item 260, UFC, for dry or solid particles at 100°F.

Source: https://assist.dla.mil -- Downloaded: 2016-12-11T05:56Z
Check the source to verify that this is the current version before use.

1.2.1 Sizes. Size of pails shall be as of the marked capacities as specified (see Figures 1, 2, or 3)

2. APPLICABLE DOCUMENTS

2.1 The following documents, of the issues in effect on date of invitation for bids or request for proposal, form a part of this specification to the extent specified herein.

Federal Specifications:

QQ-S-766 - Steel Plates, Sheets, and Strip - Corrosion-Resisting
TT-E-485 - Enamel, Semigloss, Rust-Inhibiting

Federal Standards:

FED-STD-101 - Preservation, Packaging, and Packing Materials: Test Procedures
FED-STD-123 - Marking for Shipment (Civil Agencies)
FED-STD-141 - Paint, Varnish, Lacquer, and Related Materials; Methods of Inspection, Sampling, and Testing
FED-STD-595 - Colors

(Activities outside the Federal Government may obtain copies of Federal specifications, standards, and commercial item descriptions as outlined under General Information in the Index of Federal Specifications, Standards and Commercial Item Descriptions. The Index, which includes cumulative bimonthly supplements as issued, is for sale on a subscription basis by the Superintendent of Documents, US Government Printing Office, Washington, DC 20402.

(Single copies of this specification, other Federal specifications, standards, and commercial item descriptions required by activities outside the Federal Government for bidding purposes are available without charge from General Services Administration Business Service Centers in Boston; New York; Washington, DC; Philadelphia; Atlanta; Chicago; Kansas City, MO; Fort Worth; Houston; Denver; San Francisco; Los Angeles; and Seattle, WA.

(Federal Government activities may obtain copies of Federal specifications, standards, and commercial item descriptions, and the Index of Federal Specifications, Standards, and Commercial Item Descriptions from established distribution points in their agencies.)

Military Specification:

MIL-C-51407 - Chlorinated Lime, Technical

Source: https://assist.dla.mil -- Downloaded: 2016-12-11T05:56Z
Check the source to verify that this is the current version before use.

Military Standards:

MIL-STD-105	-	Sampling Procedures and Tables for Inspection by Attributes
MIL-STD-1188	-	Commercial Packaging of Supplies and Equipment
MS 51922	-	Nut, Self-Locking, Hexagon, Prevailing Torque, General Purpose, 250°F, UNC-2B and UNF-2B

(Copies of Military specifications and standards required by contractors in connection with specific procurement functions should be obtained from the procuring activity or as directed by the contracting officer.)

Laws and Regulations:

49 CFR 178-199 - Transportation

(The code of Federal Regulations (CFR) and the Federal Register (FR) are for sale on a subscription basis by the Superintendent of Documents, US Government Printing Office, Washington, DC 20402. When indicated, reprints of certain regulations may be obtained from the Federal agency responsible for issuance thereof.)

2.2 Other publications. The following documents form a part of this specification to the extent specified herein. Unless a specific issue is identified, the issue in effect on date of invitation for bids or request for proposal shall apply:

American Society for Testing and Materials (ASTM)

D 1186 - Measurement of Dry Film Thickness of Nonmagnetic Organic Coatings Applied on a Magnetic Base, Standard Method For

(Application for copies should be addressed to the American Society for Testing and Materials, 1916 Race Street, Philadelphia, PA 19103.)

National Motor Freight Traffic Association, Inc., Agent

National Motor Freight Classification

(Application for copies should be addressed to the American Trucking Associations, Inc., Traffic Department, 1616 P Street, N.W., Washington, DC 20036.)

Uniform Classification Committee, Agent

Uniform Freight Classification

(Application for copies should be addressed to the Uniform Classification Committee, Room 1106, 222 South Riverside Plaza, Chicago, IL 60606.)

Source: https://assist.dla.mil -- Downloaded: 2016-12-11T05:56Z
Check the source to verify that this is the current version before use.

3. REQUIREMENTS

3.1 Materials. The materials and components shall be as specified herein. Materials not definitely specified shall be of the quality normally used by the manufacturer in his standard commercial pail provided that the completed item complies with all the provisions of this specification (see 6.7).

3.1.1 Steel.

3.1.1.1 Sheet or strip.

3.1.1.1.1 Low carbon steel. Sheet or strip shall be low carbon, cold rolled steel of commercial quality. Individual sheets shall be the thickness specified in table I.

3.1.1.1.2 Corrosion-resisting steel. Sheet or strip shall be in accordance with class 304 of QQ S-766 or other grades of equal or better corrosion-resistance.

TABLE I. Steel sheet decimal thickness of gage

Gage number	Nominal thickness (inches)	Minimum thickness (inches)
28	0.0149	0.0129
26	0.0179	0.0159
24	0.0239	0.0209
22	0.0299	0.0269
20	0.0359	0.0324

NOTE: Thickness shall be measured at any point on the sheet not less than 3/8-inch from an edge.

3.1.1.2 Wire. Wire shall be commercial quality. The wire shall be of the nominal gage thickness specified in table II. The wire shall have a commercial corrosion-resistant finish.

TABLE II. Steel wire decimal thickness of gage

Wire gage number	Nominal thickness, inches
#3 W & M	0.2437
#5 W & M	0.2070
#9 W & M	0.1483
#10 W & M	0.1350
#12 W & M	0.1055

Source: https://assist.dla.mil -- Downloaded: 2016-12-11T05:56Z
Check the source to verify that this is the current version before use.

3.1.2 Rivets, seaming compound, gaskets, cap liners, and interior coatings. Unless otherwise specified (see 6.2), rivets shall be flathead and steel coated to resist corrosion; seaming compound shall be nonhardening; gaskets and cap liners shall be either flowed in or the fitted type; and interior coating shall be that normally used by the industry for protection of the interior surface of the pails.

3.1.2.1 Gasket. The gasket material for the type III, class 6 pail cover shall be resistant to chlorine and to oxidizing compounds containing chlorine (see 6.1.1)

3.1.2.2. Wax. The wax for type III, class 6 pail shall be chemically inert, water-resistant microcrystalline wax which shall firmly adhere to the pail surfaces (see 6.5).

3.1.2.3 Interior protective coating for the type III, class 6 pail. The interio protective coatings for the type III, class 6 pail shall be a baked enamel having a phenol-formaldehyde, epoxy-phenolic or vinyl resin base and shall contain no compound of iron (see 6.4).

3.1.3 Enamel. Enamel shall conform to TT-E-485 or be the standard baking enamel used in the commercial production of steel drums, pails and cans (see 3.6.3). Wher the latter is used it shall be the alkyd resin type cross-linked with a malamine and/or urea formaldehyde type resin. When specified (see 6.2), the color of the coating shall be in accordance with olive drab No. 24087 or olive green No. 24064 c FED-STD-595. The baked enamel for the interior of type III, class 6 pail shall hav a phenol-formaldehyde or vinyl-resin base.

3.1.4 Closure assembly. The closure assembly shall be either a commercial clinched-in, clinch-on, crimp-on or plastic press-in captive cap type. Figures 4 through 19 are illustrations only, and details shall be in accordance with the manufacturer's standard product and as specified herein.

3.1.4.1 Press-in captive-cap closure (see figure 9). The press-in captive cap closure shall be molded of commercial quality polyethylene or comparable plastic. The closure shall be designed to be pressed into the opening in the pail top. The closure shall have the upper end closed off by an integrally molded tear-out diaphragm. A ring pull shall be integrally connected to the diaphragm for hand removal and stored in depressed position with the overlying snap cap. The closure shall have a pouring opening of not less than 1-1/2 inches in diameter. The closur shall include, when specified (see 6.2), a pull-up pouring spout, either self venting or non-venting, which shall be molded of commercial quality polypropylene c comparable plastic. The spout shall be able to be pulled to fully extended pouring position upon removal of the diaphragm and shall include an integrally molded grip for lifting. The spout, in extended pouring position, shall tightly engage within the nozzle opening and shall extend not less than 2-3/4 inches above the pail surface where the closure is seated.

Source: https://assist.dla.mil -- Downloaded: 2016-12-11T05:56Z
Check the source to verify that this is the current version before use.

3.1.4.2 Crimp on seal with removable diaphragm (see figure 16). Closures shall be made of commercial quality polyethylene or comparable plastic and shall be molded so that the plastic material shall seal around a preformed opening of approximately 2-3/8 inches in the container by crimping. The flange shall fit into a metal retaining ring and be attached to the container by crimping. The flange shall have a raised diaphragm as an integral part which, when cut off laterally, shall provide a pouring opening of approximately 1-5/8 inches. The diaphragm portion shall be designed to receive a snap fit cap for reclosing. The closure, when specified, shall have a cap molded of commercial quality low density or high density polyethylene or comparable material. The cap shall have a molded-on bail for lifting off and the cap shall be a snap-on type.

3.1.4.3 Crimp on seal with threaded plug opening (see figure 17). The flange portion of closure shall be molded of commercial quality polyethylene or comparable plastic and shall have 3/4 inch 14 NPS female threads as an integral part in the center. A molded-in diaphragm shall be provided at the base of the 3/4 inch openin which must be removed for dispensing. The flange shall be molded so that the plastic material shall seal around a preformed opening of approximately 2-3/8 inche in the container. The flange shall fit into a metal retaining ring and be attached to the container by crimping. A 3/4 inch plug with 14 NPS male threads per inch made of commercial quality polyallomer or comparable material for resealing shall b provided. The plug shall have a recessed area in the top to accommodate a wrench.

3.1.4.4 Clinched-in. The clinched-in closure shall be the commercial clinched-i type illustrated on figures 4 through 6, and 12. The closure shall include a metal base or retainer ring for attaching to the formed opening in the pail top and a gasket for attaching to the pail. Unless otherwise specified, a screwcap, or when specified a snap-on cap as specified (see 3.1.4.6, 3.1.4.7, and 6.2), shall be provided each closure. The gaskets for the base and the cap shall effect a tight seal when the assembly is in the closed position and attached to the pail (see 4.3.1, 4.3.2, and 4.3.3). Gasket material and cap liner material shall be as specified in 3.1.2. Caps shall make a leakproof seal, not only at time of application, but during transit and storage. Not less than two full continuous threads shall be provided for nozzles or spouts having screw thread caps. Means fc holding cap onto the closure shall be provided for snap-on caps. When specified (see 6.2), nozzles shall be provided with metal inner seals (see 3.1.4.8 and figures 4 and 5), metal self-venting spouts (see 3.1.4.9.4 and figure 11), metal or plastic push-pull spouts (see 3.1.4.9.1 and figure 12), and metal or plastic reversible spouts (see 3.1.4.9.2 and figure 13).

Source: https://assist.dla.mil -- Downloaded: 2016-12-11T05:56Z
Check the source to verify that this is the current version before use.

3.1.4.5 Clinch-on. The clinch-on closure shall be the commercial clinch-on type illustrated on figures 4, 7, 8, and 10 through 14, and 16, 17 and 18 and as specified herein. The closure shall include a metal base or retainer ring, or a combination of metal and plastic base, or plastic neck with metal retainer ring for attaching to the formed opening on the pail top. The all metal closures shall have a gasket on the base for attaching to the pail, and the combination metal and plastic shall be so designed to form a leakproof joint. Unless otherwise specified, a screwcap, and when specified a snap-on cap (see 3.1.4.6, 3.1.4.7, and 6.2, shall be provided. The gasket for the base, or the formed metal and plastic base and cap, shall effect a tight seal when the assembly is in the closed position and attached to the pail (see 4.3.1, 4.3.2, and 4.3.3). Gasket material and cap liner material shall be as specified in 3.1.2. Caps shall make a leakproof seal not only at the time of application, but during transit and storage. Not less than two full continuous threads shall be provided for closures having metal screw thread caps. Means for holding cap onto the closure shall be provided for snap-on caps. Closures made from metal only, shall, when specified (see 6.2), be provided with inner seals or spouts as specified in 3.1.4.4. Closures made from a combination of metal and plastic, shall be provided with an integral or attached plastic seal or diaphragm. When specified (see 6.2), metal and plastic closure assemblies shall be provided with a flexible, plastic spout (see 3.1.4.9.3 and figure 10), or push-pull plastic spout (see 3.1.4.9.1 and figures 12, 14, and 18), or reversible metal or plastic spout (see 3.1.4.9.2 and figure 13).

3.1.4.6 Screwcap (metal). Metal screwcaps shall be commercial quality, having two or more continuous full threads that will match the threads of the nozzle or spout, and be of sufficient length to completely engage a minimum of 2 threads when cap with gasket or cap liner in place is screwed on (see figures 4, 5, 7, and 11 through 14).

3.1.4.7 Snap-on cap. A snap-on cap shall open by downward pressure in center, and close by pressing down and in on sides. This closure shall be fabricated from minimum 128 pounds base weight metal coated with minimum 50-pound tinplate. It shall be protected by tear type band made of minimum 55-pound base weight metal coated with 0.25 pound tinplate or minimum 0.00094 inch thick commercial aluminum alloy. This band covering the sides and partially covering the top of the cap shall be secured by crimping to provide a tamperproof, shockproof, overseal, (see figures 6, 8, and 12).

3.1.4.8 Closure seal. The seal (see 3.1.4.1, 3.1.4.4, and 3.1.4.5), shall be applied to the closure in such a manner that it shall be necessary to destroy the seal to remove the contents of the pail (3.1.4.9.3 and 3.1.4.9.4 closures have a built-in seal, see figures 5 through 10, 12, and 14). The seal is for tamperproofing and does not have to be leakproof. It may be an inner or outer seal.

Source: https://assist.dla.mil -- Downloaded: 2016-12-11T05:56Z
Check the source to verify that this is the current version before use.

3.1.4.8.1 Reseal closure. The reseal closure shall be of molded commercial quality polyethylene or comparable plastic (see figure 9). The portion of the closure attached to the container shall be molded so as to make a preload friction fit on the outside diameter of the sealing portion of the closure when pressed into a preformed opening 1.921 ± .004 inches in diameter in the container top. Such an opening shall have a downward-extended lip. The closure is of a one-piece design with a pull ring molded as an integral part to facilitate the removal of the closure from the container. The closure is removable from and resealable in the container opening.

3.1.4.9 Pouring device. The closure shall be constructed so that the contents of the pail may be removed without loss or spilling. To facilitate pouring, the closure, when specified (see 6.2) (see 3.1.4.1, 3.1.4.4, or 3.1.4.5), shall have a spout.

3.1.4.9.1 Push-pull spout. The push-pull spout shall be made from metal or plastic, movable axially, and shall be assembled to the nozzle (see figures 9, 11, 12, and 14). When specified (see 6.2), spout shall be self-venting (see figures 11 and 12).

3.1.4.9.2 Reversible spout. Reversible spout shall be made from metal or plastic and have a flanged base with mating parts joined by gasket to provide a leakproof joint, whether the spout be seated inwardly in the pail or outwardly for pouring. This spout is only available on closure assemblies with screwcap (see figure 13). Metal spout shall be provided with metal screwcaps and plastic spouts with plastic screwcaps.

3.1.4.9.3 Flexible spout closure. Flexible spout closure shall be molded of commercial quality polyethylene or a comparable plastic. A tear out diaphragm of the same material shall be molded as an integral part of the pouring spout. The portion of the closure attached to the container shall be molded so as to fit on the outside diameter of the sealing portion of the preformed opening in the container head prior to being clinched on. The pre-formed opening shall provide an opening in the container of approximately 2-3/8 inches to receive the flexible spout closure. The pour spout shall be collapsed inward and have a tamperproof cap made of 70 pounds base weight steel, aluminum of comparable thickness or plastic. The tamperproof cap shall be so designed that it must be destroyed to remove. The pour spout shall be flexible so that it may be extended upward from collapsed position to pouring position. The pouring end of the spout shall be male threads and shall be fitted with a plastic screw cap made of polyethylene or comparable material for reclosing. The plastic screw cap shall have one or two bails or other suitable finger grips for lifting the spout into a pouring position. The bails or finger grips shall be molded as an integral part of the cap. This spout is not available with a snap-on type cap (see figure 10).

Source: https://assist.dla.mil -- Downloaded: 2016-12-11T05:56Z
Check the source to verify that this is the current version before use.

3.1.4.9.4 Self-venting flexible spout. The self-venting flexible spout shall be the same as described in 3.1.4.9.3, except it shall have an attachment to induce self-venting when in pouring position (see figure 10).

3.1.4.9.5 Flexible spout closure, intermediate size. The flexible spout closure, intermediate size (see figure 15), shall be molded of commercial quality polyethylene or comparable plastic. The horizontal type cut-off diaphragm of the same material shall be molded as an integral part of the pouring spout. The portion of the spout closure attached to the container shall be molded so as to make a pre-cut friction fit on the outside diameter of the sealing portion of the closure when pressed into a pre-formed opening 1.921 ± .004 inches in diameter in the container top. Such an opening shall have a downward extruded lip. The spout closure shall have male threads on the pouring end to receive a cap molded of high-density polyethylene or comparable material with female matching threads. The cap shall have two bails molded as an integral part of the cap for lifting the spout into pouring position. The spout in open position shall extend a minimum of 1-5/8 inches above the top of the can, and the spout closure shall have a pouring opening of not less than 7/8 inches in diameter.

3.1.4.9.6 Rigid pour spout closure. The RIGID POUR SPOUT closure shall be molded of a commercial quality polyethylene or comparable plastic. The portion of the closure attached to the container shall be molded so as to fit on the outside diameter of the sealing portion of the preformed opening in the container head prior to being clinched on. The preformed opening shall provide an opening in the container of approximately 2 and 3/8 inches to receive the RIGID POUR SPOUT closure. The pour spout portion shall be snapped in place in the portion of the closure attached to the container. The closure shall have a diaphragm/tamperproof molded cap. This cap will have a pull ring molded as an integral part to facilitate opening the closure exposing the pour spout and extending the pour spout. The pour spout portion shall pull up into the portion attached to the container and be locked into the pour position by turning. The pour opening shall have a snap bead so the diaphragm/tamperproof cap can be snapped on for sealing. In the pour position the pull ring on the cap can be placed around the pour spout to render the cap captive (see figure 18).

3.2 Design and construction.

3.2.1 Type I pail. Type I pails shall be tight-head, of capacity specified in figure 1 (see 6.2), and of design and dimensions specified in figure 1, with body formed for stacking (see 3.2.1.1); closure (see 3.2.1.2.3); a handle (see 3.2.1.3), and construction as specified herein.

3.2.1.1 Body, type I pail. Body shall be formed from one piece of steel specified in 3.1, and of gage specified in 1.2.1, for the applicable class required. Each pail shall have the top diameter reduced sufficiently to permit

Source: https://assist.dla.mil -- Downloaded: 2016-12-11T05:56Z
Check the source to verify that this is the current version before use.

stacking by placing another pail over the top chime so that the bottom chime of the top pail shall be outside with sufficient clearance between the two to allow free and easy stacking. Beads shall be furnished on 10 to 12 gallon capacity pails only (see figure 1).

3.2.1.1.1 Body seams, type I pail. Type I, classes 1, 2, 5, 6, 7, and 12 pails shall have the body seams welded or other equally efficient construction. All other classes shall have the body seams welded.

3.2.1.2 Heads, type I pail. Top and bottom heads shall each be formed from one piece of steel specified in 3.1.1.1, and of gage specified in 1.2.1, for the applicable class required. The top and bottom head (see 3.2.1.2.1), shall be double-seamed to the body (see figure 1). Seaming compound shall be as specified in 3.1.2.

3.2.1.2.1 Chimes, type I pail. Chimes shall be double-seamed. Seaming compound used in the double seams shall be as specified in 3.1.2, unless otherwise specified (see 6.2). The compound shall be applied in such a manner so that no excess compound remains on the inside or outside of the pail.

3.2.1.2.2 Top head, type I pail. Type I pails shall have formed opening in the top head, suitable for attachment of a closure, as required (see 3.1.4, and figure 4 through 19). The size of the opening and distance from chime shall be determined by the type of closure specified (see 6.2). There shall be a smooth gasket seat for every closure. The opening for closure shall be covered with a shipping cap (see figure 4), unless the nozzle is assembled at the pail manufacturer's plant. The shipping cap shall cover the formed opening and prevent dust from entering the pail, shall be a snug fit, and shall be removable without use of special tools. All fittings with closure sealed shall be below the plane of the top chime by at least 1/16-inch.

3.2.1.2.3 Closure, type I pail. Type I pails shall be furnished with a closure of size and type specified in 3.1.4 through 3.1.4.5. Closures shall be either of the clinch-on, crimp-on, press-in captive or clinched-in type, at the option of the contractor, when the pail is furnished as a container for materials purchased by the Government. Otherwise, they shall be as specified (see 6.2).

3.2.1.3 Handle, type I pail. The formed wire handle shall be made from steel specified in 3.1.1.2, and of gage specified in table III for size pail required. The wire handle shall be secured to the pail by means of a formed cleat. The minimum thickness of the formed cleat shall be the same as for the top of the pail and shall be formed to receive the wire handle. The cleat shall be attached to the top head by welding, leakproof riveting (see 3.1.2), or as otherwise specified (see 6.2). The wire handle when folded, shall lie flat, and shall provide for a straight grip of not less than 2-5/8 inches in length, for pails less than 11-1/4 inches inside diameter, and 3-1/4 inches in length, for 11-1/4 inches inside diameter and over.

Source: https://assist.dla.mil -- Downloaded: 2016-12-11T05:56Z
Check the source to verify that this is the current version before use.

TABLE III. Handle gage for type I pails

Inside diameter of pail, inches	Wire gage	Nominal thickness, inches
6-9/16	#9 W & M	(.1483)
8-7/16	#9 W & M	(.1483)
11-1/4	#5 W & M	(.2070)
13-15/16	#5 W & M	(.2070)

3.2.2 Types II and III pails. Types II and III pails shall have fully removable covers and be of capacity specified in figures 2 and 3 respectively (see 6.2), and of design and dimensions specified in figures 2 and 3 respectively, with body formed for stacking, (see 3.2.2.1 and 3.2.2.1.1), covers (see 3.2.2.3), closures (see 3.2.2.4), a bail (see 3.2.2.5), and construction as specified herein. The dimensions for the type III, class 6, 8 gallon pail shall be similar to the dimensions listed for the 8 gallon pail in figure 2.

3.2.2.1 Body types II and III pails. Type II bodies shall have straight sides; type III bodies shall have tapered sides (see 3.2.2.1.1). Body shall be formed from one piece of steel specified in 3.1.1.1, and of gage specified in 1.2.1, for the applicable class required. Each pail shall have the bottom diameter reduced sufficiently to permit stacking by placing another pail into the cover so that the bottom chime of the top pail shall be inside with sufficient clearance between the two to allow free and easy stacking. One bead shall be formed in the body near the top of the pail. Lower bead on type III pails (shown but not required), may be supplied (see figure 3). Lower bead on type III pail is to facilitate nesting. It may be omitted if another feature is incorporated in the pail design such as an interrupted bead or having the pail ears so placed that the nested pails can be separated.

3.2.2.1.1 Type III pail. Bodies for type III pails shall be tapered to facilitate nesting and stacking when empty and cover is off (see figure 3).

3.2.2.1.2 Body seams, types II and III pails. The body seams of types II and III pails shall be welded. Type II, class 9 pails may be locked and soldered.

3.2.2.1.3 Curl, types II and III pails. The top of each body shall be rolled outward to form a false wire or curl over which the removable cover may be secured. The curl shall be a minimum 9/32-inch diameter formed section with the under part close to the body (see figures 2 and 3). The curl may be formed over a 3 gage wire.

3.2.2.2 Bottom head, types II and III pails. The bottom head shall be formed from one piece of steel specified in 3.1.1.1, and of gage specified in 1.2.1, for the applicable class required. Type II, class 2, 4, and 8 bottoms must have three inward embossed circumferential beads. The chime shall be formed and double-seamed as specified in 3.2.1.2.1. Seaming compound shall be as specified in 3.1.2.

Source: https://assist.dla.mil -- Downloaded: 2016-12-11T05:56Z
Check the source to verify that this is the current version before use.

3.2.2.3 Covers, types II and III pails. Unless otherwise specified, (see 6.2) each cover shall be formed without openings for pouring closure from one piece of steel specified in 3.1.1.1, and gage specified in 1.2.1, for the applicable class required. Type II, class 2, 4 or 8 covers must have two inward embossed circumferential beads and 16 lugs with 1/4 inch spaces. The cover-bib shall extend to not less than the horizontal centerline of the curl when the drum is sealed with the gasket in place. Unless otherwise specified (see 6.2) types II and III pail covers shall have lugs for closing except for the type III, class 6 pail cover (see 3.2.2.3.1). Lug covers shall have the number of lugs depending on size of pail as shown in table IV. The lugs shall be equally spaced and shall be provided with slots to facilitate opening. Each cover shall be provided with a gasket as specified in 3.1.2, which shall provide an effective seal (see 4.3.1, 4.3.2, and 4.3.3). When opening for pouring closure is specified, and pouring closure is furnished separately (see 3.2.2.4 and 6.2), the requirements for the opening, shipping cap, and fittings of 3.2.1.2.2, shall apply, and the covers shall be loose or securely closed, as specified (see 6.2). When specified (see 6.2), closure shall be other than lug cover and comply with the requirements of the applicable DOT specification.

3.2.2.3.1 Cover type III, class 6. The cover for the type III, class 6 pail shall be a bolted, locking ring closure. The diameter of the bolt shall be no less than 3/8-inch. The bolt and nut shall be composed of galvanized plated steel or other non-corrosive metal. The nut shall be a self-locking type conforming to MS 51922 or one known to be of equal or better performance. The gasket (see 3.1.2.1) shall be flowed into the underside of the outside edge of the removable cover. The cover shall not leak when tested as specified in 4.3.3.1.

TABLE IV. Number of lugs per cover

Nominal diameter, inches	Number of lugs per cover
6-9/16	8 or more
8-7/16	8 or more
11-1/4	16
13-15/16	16 or more

3.2.2.4 Closures, types II and III pails. When specified (see 6.2), types II and III pails shall be provided with closures as specified in 3.2.1.2.3.

3.2.2.5 Bails, types II and III pails. Bails shall be made from coated steel wire specified in 3.1.1.2, and of gage specified in table V. A wire bail shall be securely attached to each pail of 11-1/4 inches or less in diameter. Handgrips shall be provided on the bails for 11-1/4 inch diameter containers only. The bail shall be attached to each pail by means of ears or clips which shall be securely

Source: https://assist.dla.mil -- Downloaded: 2016-12-11T05:56Z
Check the source to verify that this is the current version before use.

attached to the body by welding, leakproof riveting (see 3.1.2), or the bumped-in method. When specified (see 6.2), the 13-15/16 inch diameter pails shall be provided with drop-side handles. The drop-side handles shall be attached to each pail by means of cleats which shall be securely attached to pail body by welding or leakproof riveting.

TABLE V. Bail, gage for types II and III pails

Diameter of pail, inches	Wire gage No.
6-9/16	#12 W & M
8-7/16	#10 W & M
11-1/4	# 9 W & M
13-15/16	# 5 W & M

3.2.2.5.1 Handgrip. The handgrip shall be made of wood, plastic, or other suitable material, at the option of the manufacturer. The handgrip shall be not less than three inches long. This shall apply to types II and III pails with 11-1/4 inch diameter only.

3.2.2.6 Drip basket. When specified (see 6.2), type II and III pails shall be provided with a commercial drip basket to comply with the intended use.

3.2.2.7 Auxiliary compartment. When specified (see 6.2), type II and III pails shall be provided with an auxiliary compartment to comply with the intended use.

3.3 Welding. Areas of material to be welded, shall be clean and free of rust, loose scale, corrosion, oil, water, and any other matter injurious to welding. Welds shall be continuous, sound, and smooth; free from pits, cracks, deformation of material, splatter, burn through flash, and show good fusion. All loose scale or flux deposits shall be removed from the finished welds. Rough surfaces or projecting fins shall be removed. Welds shall have strength equal to that of the materials joined, and meet the requirements of 3.9.

3.4 Marking. Marking of the pails shall be in accordance with the provisions of the applicable regulation or rules. In addition, when pails are procured by the government, the pail shall be marked "PPP-P-704E" either stenciled or printed in a permanent contrasting color. This additional marking shall not be required when pails are furnished incident to procurement of the product.

3.5 Capacity. The capacity of the pails shall meet the requirements of the applicable DOT specifications, rule 40 of the Uniform Freight Classification, or Item 260 of the National Motor Freight Classification, as applicable.

3.6 Finish.

Source: https://assist.dla.mil -- Downloaded: 2016-12-11T05:56Z
Check the source to verify that this is the current version before use.

3.6.1 Cleanliness. The interior and exterior of the pails shall be free of rust, loose scale, metal particles, and foreign matter.

3.6.2 Interior coatings. Unless otherwise specified (see 6.2), pails used to package materials having a deleterious effect on the pail (or vice versa), shall be given a smooth coat of an appropriate lining (interior coating), as needed for the product packaged of sufficient density to cover all interior exposed surfaces, with exception of the closure. The interior surface of the closure may be lined (see 3.1.2). Unless otherwise specified (see 6.2), soluble coatings will be permitted where their use will not affect nor be affected by the contents of the pail.

3.6.2.1 Interior protective coating, type III, class 6 pail. All interior surfaces of the type III, class 6 pail, including the underside of the removable cover, shall be uniformly and completely covered with two coats of baked-on enamel conforming to 3.1.2.3. The first coat shall be applied and baked-on the shell and bottom cover of the pail prior to assembly, while the second coat shall be applied and baked-on after assembly. Application and baking procedures shall conform to the directions of the manufacturer of the coating. The interior protective enamel coating shall show no blistering, checking, blushing, cracking, softening, crazing, pronounced discoloration or permit corrosion of the metal or any other sign of failure or deterioration as a result of exposure to chlorine when tested as specified in 4.3.5.

3.6.3 Exterior coatings. All exterior surfaces shall be coated in the flat or after fabrication of the pail. The coating shall be a corrosion inhibiting enamel specified in 3.1.3, applied to a minimum dry film thickness of 0.6 mil when tested as specified in 4.3.4. Wire bails, handles, handle cleats, and bail ears coated as specified in 3.6.4 may be painted with enamel specified in 3.1.3. When coating is done in the flat, it is not necessary to recoat after fabrication, except to touch up uncoated areas left for fabrication, such as side seams and spots left for attaching ears and clips. After complete fabrication of the pail, the enamel shall show good adhesion, be difficult to furrow, not flake off, and not show jagged edges when knife-tested as specified in 4.3.4. If TT-E-485 finish is adversely affected in appearance or adhesion by the high bake of the internal liner coat an alternate coating comparable to TT-E-485 may be used. When the standard commercial baking enamel is used with containers calling for baked interior linings, an exterior paint incorporating a modified polyester resin may be used instead of the normal alkyd coating.

3.6.3.1 Exterior (camouflage) enamel, type III, class 6 pail. All exterior surfaces of the type III, class 6 pail, including that of the removable cover shall be uniformly and completely covered with two coats of baked-on enamel conforming to that specified for the type III, class 6 pail in 3.1.3. The first coat shall be applied and baked-on the shell and bottom cover of the pail prior to assembly; while the second coat shall be applied and baked-on after assembly. The minimum dry film thickness, adhesion, furrowing, flake-off and jagged edges requirements of 3.6.3 shall apply. The camouflage enamel shall meet the same requirements for resistance to chlorine as specified for interior protective coating in 3.6.2.1.

Source: https://assist.dla.mil -- Downloaded: 2016-12-11T05:56Z
Check the source to verify that this is the current version before use.

3.6.4 Wire handle cleats and bail ears. Handle cleats, and bail ears shall be zinc-coated or otherwise protectively coated to resist corrosion.

3.6.5 Closures. All ferrous metal parts of closures shall be provided with a commercial rust-inhibiting protective finish.

3.6.6 Waxing. Molten wax conforming to 3.1.2.2 shall be applied to all interior and exterior seams of the type III, class 6 pail over the protective or camouflage coating. The wax shall cover the seams and extend 1 inch on each side of the seams. In addition, wax shall be applied to the top lip of the pail, extending downward 1 inch ± 1/2 on the outside of the pail. Wax shall be applied to the gasket in a strip no less than 1 inch.

3.7 Compliance. The containers shall comply with the specifications of the DOT, Uniform Freight Classification, or National Motor Freight Classification, as applicable.

3.8 Performance. The pails shall be able to withstand tests specified in 4.3 through 4.3.4 without leakage. No hydrostatic or drop test is required for pails made in accordance with rule 40 of the Uniform Freight Classification and Item 260 of the National Motor Freight Classification. Pails used for shipment of hazardous materials shall meet or exceed the requirements for the applicable DOT container specification. Pails which leak when tested (see 4.3), shall be rejected or repaired by welding, and retested. Use of solder to effect repairs shall not be permitted. If interior or exterior coatings are damaged incident to repairing, the coating at the affected (area(s) shall be restored.

3.9 Workmanship. Finished pails shall be free from leaks, dents, loose covers or defective covers (when applicable), poor or no coating, no gasket or defective gasket, poor stacking ability (when applicable), defective bail and handle (when applicable), lugs missing or defective, closure defective or missing.

4. QUALITY ASSURANCE PROVISIONS

4.1 Responsibility for inspection. Unless otherwise specified in the contract, the contractor is responsible for the performance of all inspection requirements as specified herein. Except as otherwise specified in the contract, the contractor may use his own or any other facilities suitable for the performance of the inspection requirements specified herein, unless disapproved by the Government. The Government reserves the right to perform any of the inspections set forth in the specification where such inspections are deemed necessary to assure supplies and services conform to prescribed requirements.

4.2 Quality conformance inspection. Unless otherwise specified, sampling for inspection shall be performed in accordance with MIL-STD-105.

Source: https://assist.dla.mil -- Downloaded: 2016-12-11T05:56Z
Check the source to verify that this is the current version before use.

4.2.1 Component and material inspection. In accordance with 4.1, components and materials shall be inspected in accordance with all the requirements of referenced specifications, drawings, and standards unless otherwise excluded, amended, modified, or qualified in this specification or applicable purchase document.

4.2.1.1 Examination of components and materials. Examinations shall be in accordance with table VI. Failure to meet any requirements shall be cause for rejection of the component or material lot.

TABLE VI. Examination of components or materials

Examine	Sample	Requirements paragraph
Low carbon steel:		
(a) Thickness	1 sheet (each gage)	3.1.1.1.1
(b) Material 1/	-	3.1.1.1.1
Wire:		
(a) Wire gage number	1 foot	3.1.1.2
(b) Material 1/	-	3.1.1.2
Seaming compound		
(a) Material 1/	-	3.1.2
Gasket on cap liner:		
(a) Material 1/	-	3.1.2
Interior coating:		
(a) Material 1/	-	3.1.2 and 3.1.2.3
Screwcaps:		
(a) Threads	5 screwcaps	3.1.4.6
Snap-on cap:		
(a) Material 1/	5 snap-on caps	3.1.4.7
(b) Design	5 snap-on caps	3.1.4.7

1/ Material identification shall be made by checking invoice or bill of lading.

4.2.2 End item examination. A lot shall consist of all the pails of one type, class, and size offered for inspection at one time. The sample unit shall be one completely assembled pail.

Source: https://assist.dla.mil -- Downloaded: 2016-12-11T05:56Z
Check the source to verify that this is the current version before use.

4.2.2.1 Visual examination. Examination of the end item for defects shall be in accordance with table VII. The inspection level shall be S-3 and the acceptable quality level (AQL) shall be 1.5 major and 6.5 total (major and minor combined) defects per hundred units.

TABLE VII. Visual defects

Examine	Defect	Classification Major	Classification Minor
Construction Body Types I, II and III	Not one piece construction.	101	
	Seams not welded or joined as specified.		201
	Welds, when specified, not sound, smooth, and free from flux, loose scale, or flash.	102	
	Beads missing from top or bottom, when specified.		202
Construction Body Types II and III	Bottom not reduced to allow for stacking.	103	
	Curl missing on top of body.	104	
	Curl less than 9/32 inch diameter.		203
	Steel reinforcing wire missing, when specified.		204
	Not removable cover.	105	
Type I	Not tight head construction.	106	
	Top diameter not reduced to stacking.	107	
Type II	Not straight side construction.	108	
Type III	Not tapered side construction.	109	
Top and bottom head, as applicable	Not one piece construction.	110	
	Not double seam chime.	111	
	Opening for nozzle missing.	112	
	Rough gasket seat.		205
	Component missing or defective.	113	

Source: https://assist.dla.mil -- Downloaded: 2016-12-11T05:56Z
Check the source to verify that this is the current version before use.

TABLE VII. Visual defects (cont'd)

Examine	Defect	Classification Major	Minor
Top and bottom head, as applicable (cont'd)			
Compound	Excess compound remaining on inside or outside.		206
Closure	Gasket missing or not as specified.	114	
	Does not seat properly.	115	
	Highest point, when closed, not minimum of 1/16 inch below top of chime.	116	
Shipping cap	Not tight fit.	117	
	Not easily removed.		207
Screwcap	Does not form leakproof seal.	118	
	Threads do not match those on spout.	119	
	Threads do not engage completely when cap with gasket or cap liner is screwed tight.	120	
Snap-on cap	Loose fit, does not form leak proof seal.	121	
Closure assembly	Does not attach firmly to pail.	122	
	Does not form leakproof seal.	123	
	Cap missing.		208
	Seal missing.		209
	Gasket missing.		210
	Less than two threads, on cap.		211
	No means for holding snap-on when specified.	124	
Seal	Missing.	125	
	Does not prevent removal of contents.	126	
	Is not tamperproof type.		212
Pouring device	Spout not type specified or not self-venting.		213
	Cap or other component missing.	127	

Source: https://assist.dla.mil -- Downloaded: 2016-12-11T05:56Z
Check the source to verify that this is the current version before use.

TABLE VII. Visual defects (cont'd)

Examine	Defect	Classification Major	Minor
Cover - types II and III	Minimum depth greater than specified.		214
	Bib extends less than specified.	128	
	Number of closig lugs differ from quantity specified (see table IV).		215
	Lugs not equally spaced.		216
	No slots in lugs.		217
	Gasket missing.		218
	Improper fit at gasket.	129	
	Locking ring closure missing, broken, not as specified (when applicable).	130	
Bails	No steel wire, as specified.		219
	Missing, when specified.		220
	Ears or clips, as applicable, missing from pail	131	
Handle	Missing, when specified.	132	
	Does not fold flat against pail, as applicable.		221
	Not secured to pail by keeper or cleat, as applicable.		222
Handgrip (when applicable)	Not size specified.		223
	Not material specified.		224
Finish cleaning	Evidence of rust, loose scale, metal particles, foreign matter, or oily or greasy substances on interior or exterior.	133	
Interior coating	Missing, poor adhesion, inadequate or incorrect.	134	
Exterior coating	Poor adhesion, bubbles, runs.	135	
Marking	Omitted, incomplete, incorrect, or illegible.	136	

Source: https://assist.dla.mil -- Downloaded: 2016-12-11T05:56Z
Check the source to verify that this is the current version before use.

4.2.2.2 Dimensional examination. The pail shall be examined for compliance with dimensions specified. Any dimension not within the specified tolerance shall be classified a defect. The inspection level shall be S-2 and the AQL shall be 4.0 defects per hundred units.

4.2.3 End item testing.

4.2.3.1 Hydrostatic and drop testing. Unless otherwise specified herein, two samples of each type, class, and size, as applicable, shall be taken at random at the start of production or whenever the design, construction, or process is changed, and tested in accordance with 4.3.1 and 4.3.2. The hydrostatic test shall be performed on one of these samples and the drop test on the other. The leak test (see 4.3.3) shall be conducted and passed prior to the drop test (see 4.3.2). After the testing, a "V" section shall be cut with a hacksaw from the chime of one of the tested containers so that the double seam may be inspected to assure a tight seam. If there is no indication of leaking of both test samples, and the seam is tight, the entire production of the line for the next 24 uninterrupted hours need not be tested in accordance with 4.3.1 and 4.3.2. Should either container fail under the hydrostatic or drop and leak test, two additional containers for each test that failed shall be selected from the test lot and subjected to the same test (or tests) as the container that failed. If neither of the retested containers leak, the tested lot shall be accepted as complying with the requirements of these tests. If either of the retested containers leak, the test lot shall be rejected and corrective measures taken in the production line. Samples last tested and accepted shall be retained until further tests are made.

4.2.3.2 Leakage testing. Each finished pail shall be tested in accordance with 4.3.3, except those tested as specified in 4.2.3.1. Leakers shall be rejected or repaired and retested. Retested pails that leak shall be rejected.

4.2.3.3 Exterior coating testing. The pails shall be tested as specified in 4.3.4 for conformance to the exterior coating requirements in 3.6.3. The lot size shall be expressed in units of one pail. The sample unit shall be one pail. The inspection level shall be S-2 and the AQL shall be 6.5 defects per hundred units.

4.2.3.4 Interior coating test. The pails shall be tested as specified in 4.3.5 for conformance to the interior coating requirements in 3.6.2. The lot size shall be expressed in units of one pail. The sample unit shall be one pail. The inspection level shall be S-2 and the AQL shall be 6.5 defects per hundred units.

4.3 Methods of inspection.

4.3.1 Hydrostatic test. The sample pail shall be tested under internal hydrostatic pressure as required without leaks (see table VIII).

Source: https://assist.dla.mil -- Downloaded: 2016-12-11T05:56Z
Check the source to verify that this is the current version before use.

TABLE VIII. Internal hydrostatic pressure tests

DOT specification	Minimum internal pressure (psi)	No leakage time (minutes)
DOT 37B	None	-
DOT 17C	20	5
DOT 17E	15	5
DOT 5	40	5
DOT 37A	None	-
DOT 17H	15	5
DOT 37C	None	-
DOT 5B	20	5

4.3.2 Drop test. The sample pail shall be filled with water or with a dry, finely powdered material as required by the applicable specification (see table IX), and dropped from a height of 4 feet onto solid concrete, so as to strike diagonally on the chime. The container shall be suspended with the head containing the closures downward so that part of the chime which strikes the concrete will be that which is nearest the closure or any other part which might be considered weaker. With the crush pattern in the lowest position, no leakage shall be visually evident for a minimum of 5 minutes after the drop. Slight wetness, which can only be detected by wiping with the bare finger, is not considered a failure. When dry finely powdered material is required for test purposes, a slight puff on impact of the pail on the concrete, shall not be considered a failure unless leakage continues when rolling the pail on to its side.

TABLE IX. Drop tests*

Pail type	Class	Specification	Loading
Type I	1,5	DOT-37B	Dry, finely powdered material weighted to gross weight at which container is marked
I	3,4,7,8,9	DOT-17E & 17C	Water to 98 percent capacity
I	4,10	DOT-5 and 5B	Water to 98 percent capacity
Type II and III	1,3,5,9 and 1,3,6 respectively	DOT-37A	Dry, finely powdered material weighted to gross weight at which container is marked

Source: https://assist.dla.mil -- Downloaded: 2016-12-11T05:56Z
Check the source to verify that this is the current version before use.

TABLE IX. Drop tests* (cont'd)

Pail type	Class	Specification	Loading
Type II	7	DOT-17H	Water to 98 percent capacity
II and III	8 and 5 respectively	DOT-37C	Dry, finely powdered material weighed to gross weight at which container is marked
II	10 and 11	DOT-17C	Water to 98 percent capacity
III	7,8	DOT-5B	Water to 98 percent capacity

* When used for regulated products, pails shall meets all DOT regulations.

4.3.3 Leakage test (all pails except type III, class 6). All pails coming off the line shall be tested by internal air pressure and inspected for leaks in accordance with the pneumatic pressure technique of Method of 5009, FED-STD-101 and table IX or equally efficient means of testing, authorized by the Bureau of Explosives. Leakers shall be rejected or repaired, and then retested. The closures shall also be examined for leakage or spilling. Removable head containers are not required to be tested with head in place, except as specified in 4.3.

TABLE X. Air pressure test

DOT specification	Minimum internal air pressure (psi)
DOT 37A	-
DOT 37B	-
DOT 17C or 5B	15
DOT 17E	5

Source: https://assist.dla.mil -- Downloaded: 2016-12-11T05:56Z
Check the source to verify that this is the current version before use.

TABLE X. Air pressure test (cont'd)

DOT specification	Minimum internal air pressure (psi)
DOT 17H	5
DOT 5	15
DOT 37C	-
Rule 40	-
Item 260	-

4.3.3.1 Leakage test, type III, class 6 pail. Seal the pail and test for leakage, using the hot water technique or Method 5009 of FED-STD-101.

4.3.4 Test for exterior coatings. The paint shall be tested in at least two places on the top and two places on the side panel near the bottom, next to the bottom seam. Test for flexibility and toughness of the coating shall be in accordance with the requirements of Method 6304 of FED-STD-141. The samples shall have the enamel thickness tested in accordance with D 1186. Nonconformance to one or more test requirements shall be cause for rejection of the lot.

4.3.5 Chlorine resistance and coating adhesion test, type III, class 6 pail. Fill the protective enamel and camouflage enamel coated, but not wax coated type III, class 6 pail three quarters full with chlorinated lime conforming to MIL-C-51407. Close the drum securely. Place in an oven heated to 140°F ± 5 for 7 days. Remove and empty the container. Wash with water and dry. Examine interior and exterior surfaces for defects or deterioration respectively as specified in 3.6.3, 3.6.2.1 and 3.6.3.1.

5. PACKAGING

5.1 Packing. Packing shall be commercial.

5.1.1 Commercial. The assembled pails, pails with covers or closures not attached, or pails without covers or closures, or covers, or closures, shall be packed in accordance with MIL-STD-1188.

5.2 Marking. In addition to any special marking required by the contract, shipments shall be marked in accordance with MIL-STD-1188.

6. NOTES

6.1 Intended use. Containers are intended for use in packaging and packing commodities for domestic and overseas shipments. They are not intended for use in packaging and packing of items of subsistance, unless approved by the Food and Drug Administration. Since level A shipments may be made by air, liquid or semi-solid regulated products should only be packed in DOT 5, 5B or 17C pails.

Source: https://assist.dla.mil -- Downloaded: 2016-12-11T05:56Z
Check the source to verify that this is the current version before use.

6.1 Type III, class 6 pail. The type III, class 6 pail is used for shipping decontaminating agents e.g., calcium hypochlorite, technical, and chlorinated lime, technical.

6.2 Ordering data. Purchasers should select the preferred options permitted herein and include the following information in procurement documents:

(a) Title, number, and date of this specification.
(b) Type, class, applicable specification, and size required (see 1.2.1, 1.2.2, 3.2.1, and 3.2.2).
(c) When other than specified, rivets, seaming compound, gaskets, cap liners, interior coatings are required (see 3.1.2).
(d) When other color of coating is required (see 3.1.3).
(e) Kind of closure required (see 3.1.4.1, 3.1.4.4, 3.1.4.5, 3.2.1.2.2, 3.2.1.2.3, and 3.2.2.4).
(f) Whether inner or outer seal or both are required (see 3.1.4.2, 3.1.4.5, 3.1.4.8 and 30.1.1.3).
(g) Whether spout is required (see 3.1.4.1 through 3.1.4.5).
   1. Whether plastic closure will require push-pull spout and whether self venting or non-venting spout is required (see 3.1.4.1).
   2. When metal self-venting spout is required (see 3.1.4.2 and 3.1.4.5).
   3. When metal or plastic push-pull spout is needed (see 3.1.4.4 and 3.1.4.5).
   4. When metal or plastic reversible spout is needed (see 3.1.4.4 and 3.1.4.5).
   5. When flexible spout is required (see 3.1.4.5).
(h) Whether closure is to be furnished by pail manufacturer (see 3.2.1.2.3, 3.2.2.3, and 3.2.2.4).
(i) When closure is required, but is not to be furnished by the pail manufacturer, the pail contractor must specify the type of the closure. This will assure the pail manufacturer furnishing a suitable opening in the pail (see 3.2.1.2.3, 3.2.2.3, and 3.2.2.4).
(j) Method of securing cleats other than specified (see 3.2.1.3).
(k) Whether pouring closure or opening suitable for pouring closure is required for type II or III pails (see 3.2.2.3); when not required, items e, f, h, i, l and m need not be specified.
(l) If closure is to be furnished with type II pails, whether it is to be securely attached to the container top or shipped separately (see 3.2.2.3 and 3.2.2.4).
(m) If closure is to be shipped separately with type II pail and whether pail cover is to be securely attached (see 3.2.2.3).
(n) Whether other than lug cover is required (see 3.2.2.3).
(o) Whether drop-side handles are required for type II pails 13-15/16 inches in diameter (see 3.2.2.5).

Source: https://assist.dla.mil -- Downloaded: 2016-12-11T05:56Z
Check the source to verify that this is the current version before use.

(p) When drip baskets or auxiliary compartmenced pails are required (see 3.2.2.6 and 3.2.2.7), the intended use and capacity shall be specified.
(q) When soluble coating is not required (see 3.6.2).
(r) Level of packing of filled pails required (see 40.1).
(s) When other containers are required or number per container is other than specified (see 40.1.1.1).
(t) When pails over 3 gallon capacity require overpack (see 40.1.1.2).
(u) Whether pails over 3 gallon capacity shall be palletized (see 40.1.4).
(v) When materials are as specified in 40.1.1 (see 40.1.2).
(w) Shipment marking required for filled pails (see 40.2.1 and 40.2.2).

6.3 Seaming and gasketing materials. Materials such as the following, or materials equal to or better, have been found to be suitable for seaming and gasketing type III, class 6 pails.

a. Chime seaming compounds
Supplier: W. R. Grace and Company
Dewey and Almy Chemical Division
Woodbury, NJ
Materials: Darexr No. L14, L14D, L14DIS and L595

b. Gasket compounds, puffed for pail cover
Supplier: W. R. Grace and Company
Dewey and Almy Chemical Division
Woodbury, NJ
Materials: Darexr No. 700, 702, 730 and 740

6.4 Interior protective coating. Interior protective coatings such as the following, or materials equal to or better in performance have been determined as being suitable for interior protective coatings for the type III, class 6 pail.
Supplier: Mobil Chemical Company
Steel Container Department
P.O. Box 250
Edison, NY 08817
Materials: Lining Nos. 285-C-2, 285-C-102, 285-G-7, 285-G-107, 285-V-25 and 285-W-106

6.5 Wax. Wax such as the following, or material equal to or better in performance has been determined as being suitable for coating type III, class 6 pails.
Supplier: Mobil Oil Company
Scarsdale, NY
Material: Mobile wax cerese

Source: https://assist.dla.mil -- Downloaded: 2016-12-11T05:56Z
Check the source to verify that this is the current version before use.

6.6 Coating film thickness measurement. The following instrument for measuring dry film thickness of coatings on pails has been found to be satisfactory: Amtoco-Brenner's Magna-Gage (see 4.3.4).

6.7 Recycled material. It is encouraged that recycled material be used when practical as long as it meets the requirements of the specification (see 3.1).

Source: https://assist.dla.mil -- Downloaded: 2016-12-11T05:56Z
Check the source to verify that this is the current version before use.

APPENDIX

REQUIREMENTS FOR CLOSURE, PACKING, AND MARKING OF FILLED PAILS

10. GENERAL

10.1 Unless otherwise specified herein, filled containers furnished under this specification, shall be closed, packed and marked in accordance with the procedures outlined in this appendix.

20. APPLICABLE DOCUMENTS

20.1 The following documents of the issue in effect on date of invitation for bids or request for proposal, form a part of this appendix to the extent specified herein.

Federal Specifications:

PPP-B-636	-	Boxes, Shipping, Fiberboard
PPP-F-320	-	Fiberboard; Corrugated and Solid, Sheet Stock (Container Grade), and Cut Shapes

Federal Standards:

FED-STD-101	-	Preservation, Packaging, and Packing Materials: Test Procedures
FED-STD-123	-	Marking for Shipment (Civil Agencies)

Military Standards:

MIL-STD-129	-	Marking for Shipment and Storage
MIL-STD-147	-	Palletized Unit Loads
MIL-STD-1188	-	Commercial Packaging of Supplies and Equipment

30. CLOSURE

30.1 Closure of the filled pails.

30.1.1 Closure. The closure shall be firmly attached to form a leakproof joint by clinching the metal base or retainer ring onto, or into the formed opening of the pail top by means of a crimping tool supplied by the closure manufacturer.

30.1.1.1 Screwcap closure. Screwcaps shall be secured by automatic mechanical means or by cap wrenches. Hand tightening shall not be permitted.

Source: https://assist.dla.mil -- Downloaded: 2016-12-11T05:56Z
Check the source to verify that this is the current version before use.

30.1.1.2 Snap-on closures. Snap-on closures shall be secured by means of fully automatic, semi-automatic, or hand-hand closing and crimping tools. The seal shall be protected by a tear-type metal band as specified in 3.1.4.5. The band shall cover the sides and partially cover the top of the cap. The band shall be crimped or placed to provide a tamperproof, shockproof, and leakproof overseal (see 3.1.4.5 and fig. 6, 8, and 12).

30.1.1.3 Inner seal. When inner seals are specified for use with closures (see 3.1.4.6), they shall conform to commercial standards and shall be rolled or tapped firmly into place after the pail has been filled, or closure is assembled prior to installing on the pail and sealed so as not to damage the liner pad on facing.

30.1.1.4 Outer seal. When specified (see 6.2), a commercial outer seal shall be affixed over the closure so as to protect the closure unit (see 3.1.4.6).

30.1.2 Covers.

30.1.2.1 Lug covers. Each cover with the gasket in place, shall be securely closed with a downward force exerted on each lug with the tool provided by the manufacturer. Each lug shall be crimped so as to contact the body of the container.

30.1.2.2 Closing ring. The cover shall be placed on the pail with the gasket in place, the bolt-ring positioned and secured wrench tight.

30.1.3 Leakage. Leakage of the product being packaged or packed shall not occur through the closure, when tested as specified in 50.

40. PACKAGING

40.1 Packing. Filled pails shall be packed level A, B or Commercial, as specified (see 6.2).

40.1.1 Level A.

40.1.1.1 Pails having a capacity of three gallons or less. Unless otherwise specified (see 6.2), 4 or 6 pails shall be packed in the most compact manner in a snug-fitting, fiberboard box conforming to grade V2s or V3s, style RSC of PPP-B-636. Unless otherwise specified (see 6.2) each box shall be provided with full height partition and top and bottom pads made from grade W5c or V3c of PPP-F-320. Each box shall be closed and strapped in accordance with the appendix of PPP-B-636.

40.1.1.2 Pails having capacity of over three gallons. Unless otherwise specified (see 6.2), pails having a capacity of over three gallons, shall not require overpacking.

Source: https://assist.dla.mil -- Downloaded: 2016-12-11T05:56Z
Check the source to verify that this is the current version before use.

40.1.2 Level B. Unless otherwise specified herein, pails shall be packed as specified in 40.1.1, except that containers for pails having a capacity of three gallons and less, shall be domestic class, and the partitions and pads shall be made from material conforming to type CF, class domestic, minimum grade 200 of PPP-F-320. When specified (see 6.2), the material for the box, partitions, and pads shall be as specified in 40.1.1.1.

40.1.3 Commercial. Pails shall be packed in accordance with MIL-STD-1188.

40.1.4 Palletization. When specified (see 6.2), pails having a capacity of over three gallons shall be palletized in accordance with MIL-STD-147.

40.2 Marking. Marking shall be in accordance with 40.2.1, 40.2.2, as specified (see 6.2).

40.2.1 Civil agencies. Pallet load, or shipment of unpacked pails, shall be marked in accordance with FED-STD-123 or MIL-STD-1188, as applicable.

40.2.2 Military requirements. Each shipping container, pallet loads, or shipment of unpacked pails, shall be marked in accordance with MIL-STD-129 or MIL-STD-1188, as applicable.

50. QUALITY ASSURANCE PROVISIONS

50.1 End item examination. Examination of the end items shall be made to determine compliance with the requirements of this appendix. Defects shall be as specified below. The sample unit for this examination shall be one filled pail or shipping container of each type, class, and size as applicable. The lot shall be expressed in terms of pails or shipping containers. The inspection level shall be S-2 with an AQL of 4.0 expressed in terms of defects per hundred units.

Examine	Defect
Closure assembly	Not properly crimped in position. Leaks at joint
Closure caps, seals, band, or covers as applicable	Missing. Loose. Not properly applied. Gasket missing. One or more lugs not clinched. Ring not secured.

Source: https://assist.dla.mil -- Downloaded: 2016-12-11T05:56Z
Check the source to verify that this is the current version before use.

Examine	Defect
Packing	Pails of three gallons or less not packed as specified.
Marking	Omitted, incomplete, incorrect, illegible, of improper size, location, sequence, or method of application.

50.2 Tests.

50.2.1 Leak test. One sample pail or packed shipping container as applicable, containing a dummy load or the commodity specified in the contract or order, selected at random from each lot, shall be tested in accordance with Method 5007 of FED-STD-101. After the drop test the pails shall be inspected for leaks.

50.3 Test results. There shall be no visual evidence of leakage for a minimum of 5 minutes after the drop test. Slight wetness which can only be detected by wiping with the bare finger, is not considered a failure. When dry, finely powdered material is packed in a pail, a slight puff on impact with the concrete floor shall not be considered a failure, unless leakage continues when the pail is rolled onto its side. Should any pail fail under the test, two additional pails, or shipping containers, shall be selected from the lot and subjected to the same test as the pail that failed. If neither of the retested pails fail, the completed lot shall be accepted as complying with the test. Should any pail fail, the completed lot shall be rejected, and corrective measures taken.

Source: https://assist.dla.mil -- Downloaded: 2016-12-11T05:56Z
Check the source to verify that this is the current version before use.

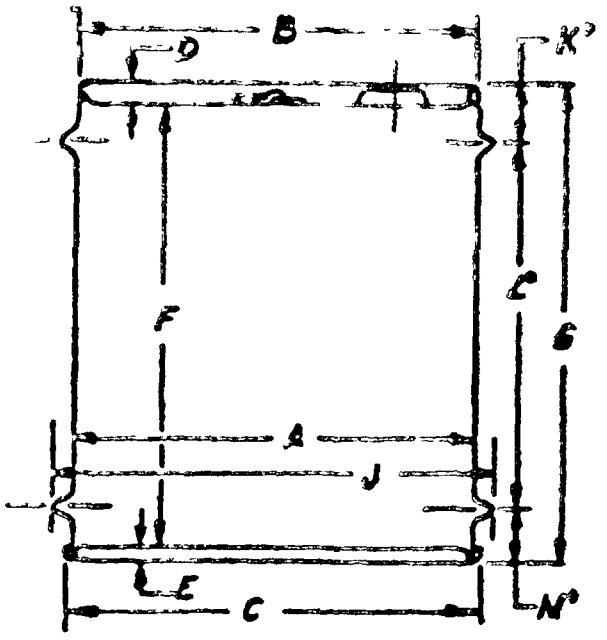

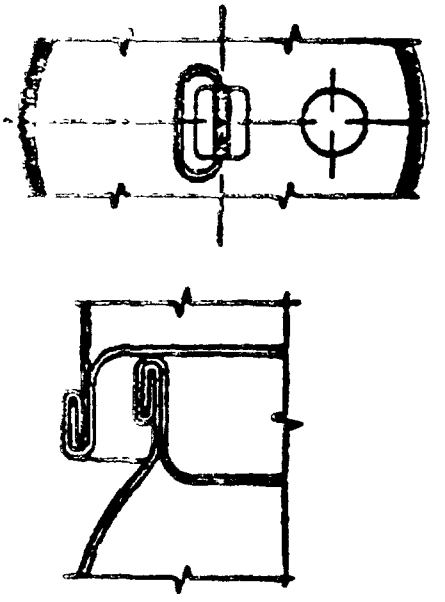

STACKING DETAIL

TOLERANCES ON ALL DIMENSIONS PLUS OR MINUS 1/16.
*BEAD FURNISHED ON 10 AND 12 GALLON CONTAINERS ONLY.
**AT THE OPTION OF THE SUPPLIER THIS DIMENSION MAY BE INCREASED TO 8-7/16 INCHES AND THE DIMENSIONS OF B THROUGH M ADJUSTED, ACCORDINGLY TO PROVIDE ONE GALLON CAPACITY.

CAPACITY GALLON	A	B	C	D	E	F	G	J	K	L	M
1	6-9/16*	6-7/16	6-9/16	3/8	1/4	7-21/32	8-1/4	*	*	*	*
1-1/2	8-7/16	8-5/16	8-7/16	3/8	5/16	6-31/32	7-3/4	*	*	*	*
2	8-7/16	8-5/16	8-7/16	3/8	5/16	8-31/32	9-3/4	*	*	*	*
2-1/2	11-1/4	11	11-31/64	7/16	3/8	6-39/64	7-15/32	*	*	*	*
3	11-1/4	11	11-31/64	7/16	3/8	7-53/64	8-11/16	*	*	*	*
3-1/2	11-1/4	11	11-31/64	7/16	3/8	9-3/64	9-29/32	*	*	*	*
4	11-1/4	11	11-31/64	7/16	3/8	10-17/64	11-1/8	*	*	*	*
5	11-1/4	11	11-31/64	7/16	3/8	12-45/64	13-5/8	*	*	*	*
6	11-1/4	11	11-31/64	7/16	3/8	14-63/64	15-27/32	*	*	*	*
10	13-15/16	13-5/8	13-15/16	11/16	11/16	15-13/16	17-1/4	14-7/8	2-7/32	14-7/16	2-7/32
12	13-15/16	13-5/8	13-15/16	11/16	11/16	19-1/8	20-9/16	14-7/8	2-7/32	17-3/4	2-7/32

FIGURE 1. TYPE I, TIGHT HEAD PAIL

Source: https://assist.dla.mil -- Downloaded: 2016-12-11T05:56Z
Check the source to verify that this is the current version before use.

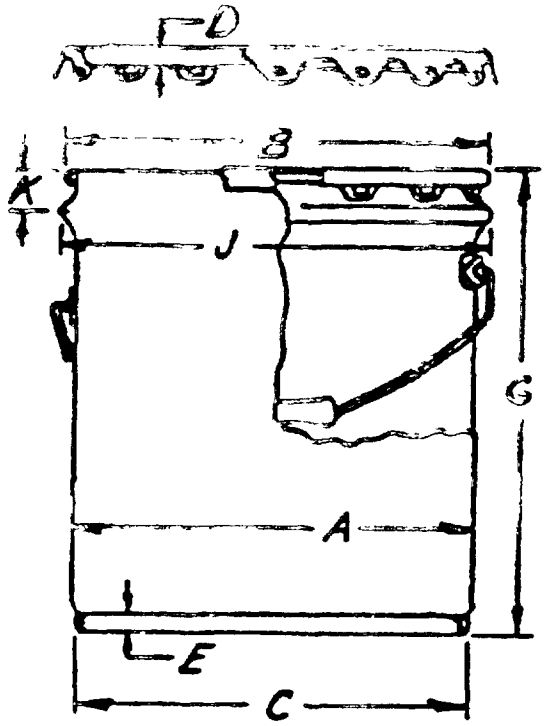

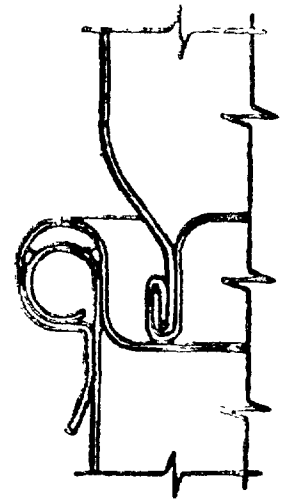

STACKING DETAIL

TOLERANCES ON ALL DIMENSIONS PLUS OR MINUS 1/16
UNLESS OTHERWISE INDICATED

CAPACITY GALLON	A	B	C	D	E	G***	J	K
1	6-9/16**	7-1/16	6-7/16	3/8	3/8	8-1/8	7-1/8	7/8
1-1/2	8-7/16	8-15/16	8-5/16	3/8	5/16	7-5/8	9	15/16
2	8-7/16	8-15/16	8-5/16	3/8	5/16	9-3/8	9	15/16
2-1/2	11-1/4	11-7/8	11 ± 10/16	7/16	7/16	7-1/4	12	1-1/8
3	11-1/4	11-7/8	11 ± 10/16	7/16	7/16	8-1/2	12	1-1/8
3-1/2	11-1/4	11-7/8	11 ± 10/16	7/16	7/16	9-11/16	12	1-1/8
4	11-1/4	11-7/8	11 ± 10/16	7/16	7/16	10-29/32	12	1-1/8
5	11-1/4	11-7/8	11 ± 10/16	7/16	7/16	13-1/4	12	1-1/8
6	11-1/4	11-7/8	11 ± 10/16	7/16	7/16	15-21/32	12	1-1/8
8	13-15/16	14-9/16	13-5/8 ± 10/16	1/2	11/16	13-27/32	14-7/8	1-1/2
10	13-15/16	14-9/16	13-5/8	1/2	11/16	17-3/16	14-7/8	1-1/2
12	13-15/16	14-9/16	13-5/8	1/2	11/16	20-1/4	14-7/8	1-1/2

**AT THE OPTION OF THE SUPPLIER THIS DIMENSION MAY BE INCREASED TO 8-7/16 INCHES AND THE DIMENSIONS OF B THROUGH K ADJUSTED ACCORDINGLY TO PROVIDE ONE GALLON CAPACITY.

***G FIGURES ARE HEIGHT OF CONTAINER WITH COVER IN PLACE.

FIGURE 2. [illegible] LUG COVER PAIL

Source: https://assist.dla.mil -- Downloaded: 2016-12-11T05:56Z
Check the source to verify that this is the current version before use.

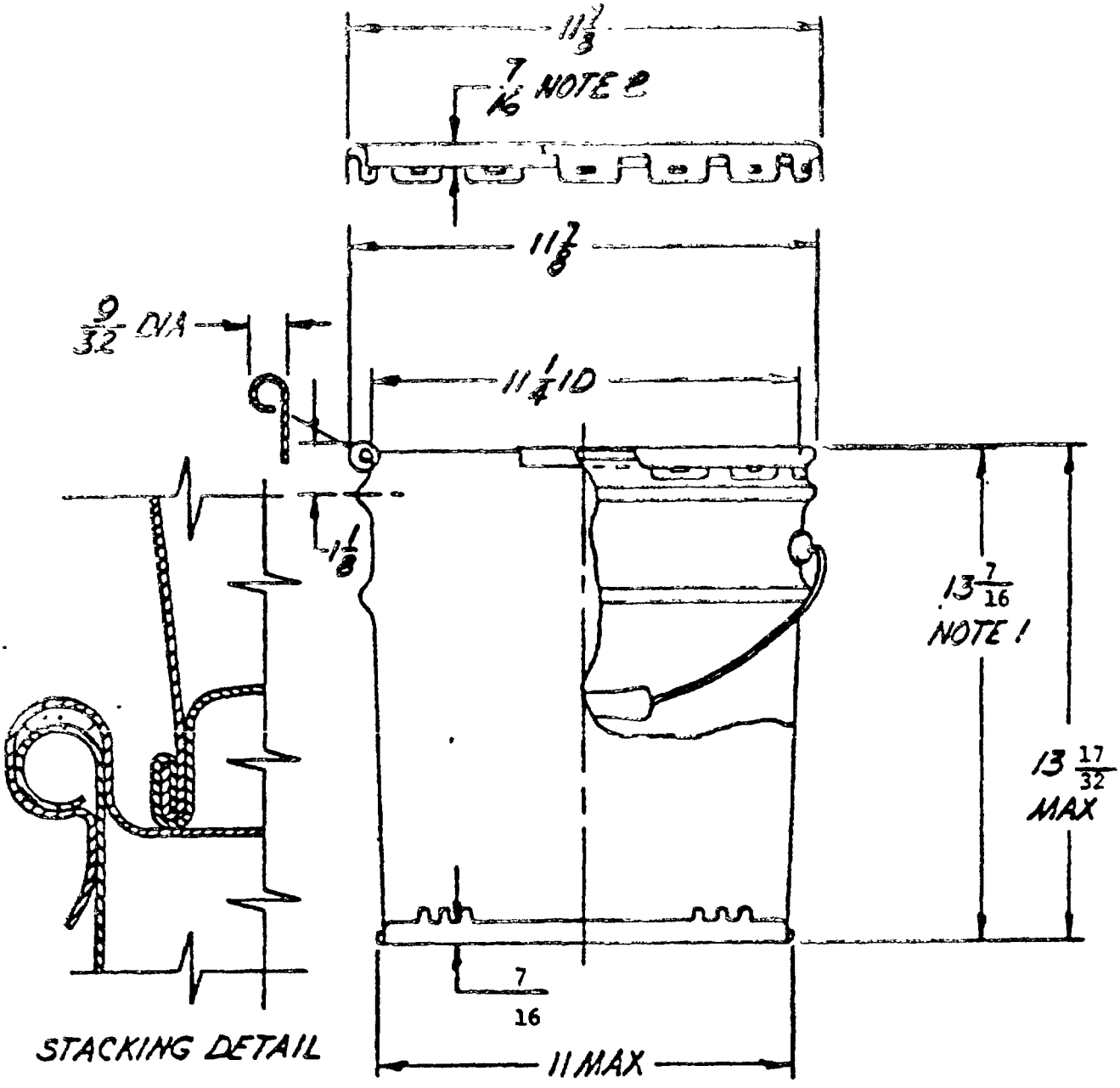

NOTES:
1. OVERALL HEIGHT DIMENSION WITH COVER OFF
2. DEPTH OF COVER DIMENSION FROM RIM TO TOP OF FLAT HEAD
3. ALL DIMENSIONS IN INCHES, TOLERANCES ± 1/16 UNLESS OTHERWISE SPECIFIED
4. EACH LUG HAS AN OVAL SLOT 7/32 x 7/16 ± 1/32 INCH

FIGURE 3. TYPE III, NESTING 5 GALLON LUG-COVER PAILS

Source: https://assist.dla.mil -- Downloaded: 2016-12-11T05:56Z
Check the source to verify that this is the current version before use.

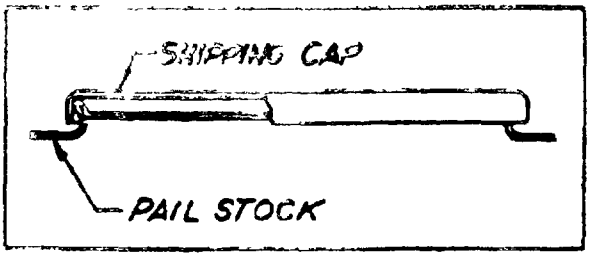

SECTIONAL VIEW OF CONTAINER OPENING WITH SHIPPING CAP ATTACHED.

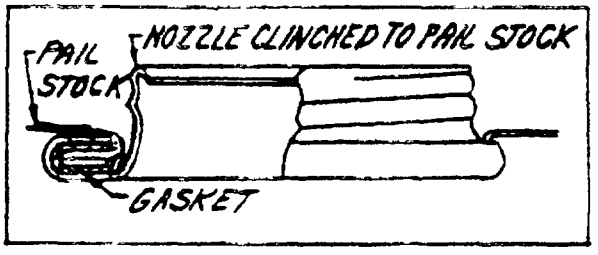

SECTIONAL VIEW OF CONTAINER OPENING WITH NOZZLE CLINCHED IN.

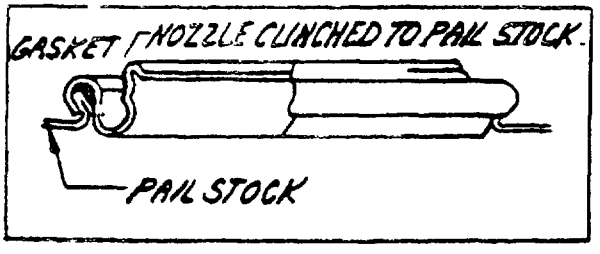

SECTIONAL VIEW OF CONTAINER OPENING WITH NOZZLE CLINCH ON

FIGURE 4 - SECTIONAL VIEWS OF OPENINGS AND NOZZLES

Source: https://assist.dla.mil -- Downloaded: 2016-12-11T05:56Z
Check the source to verify that this is the current version before use.

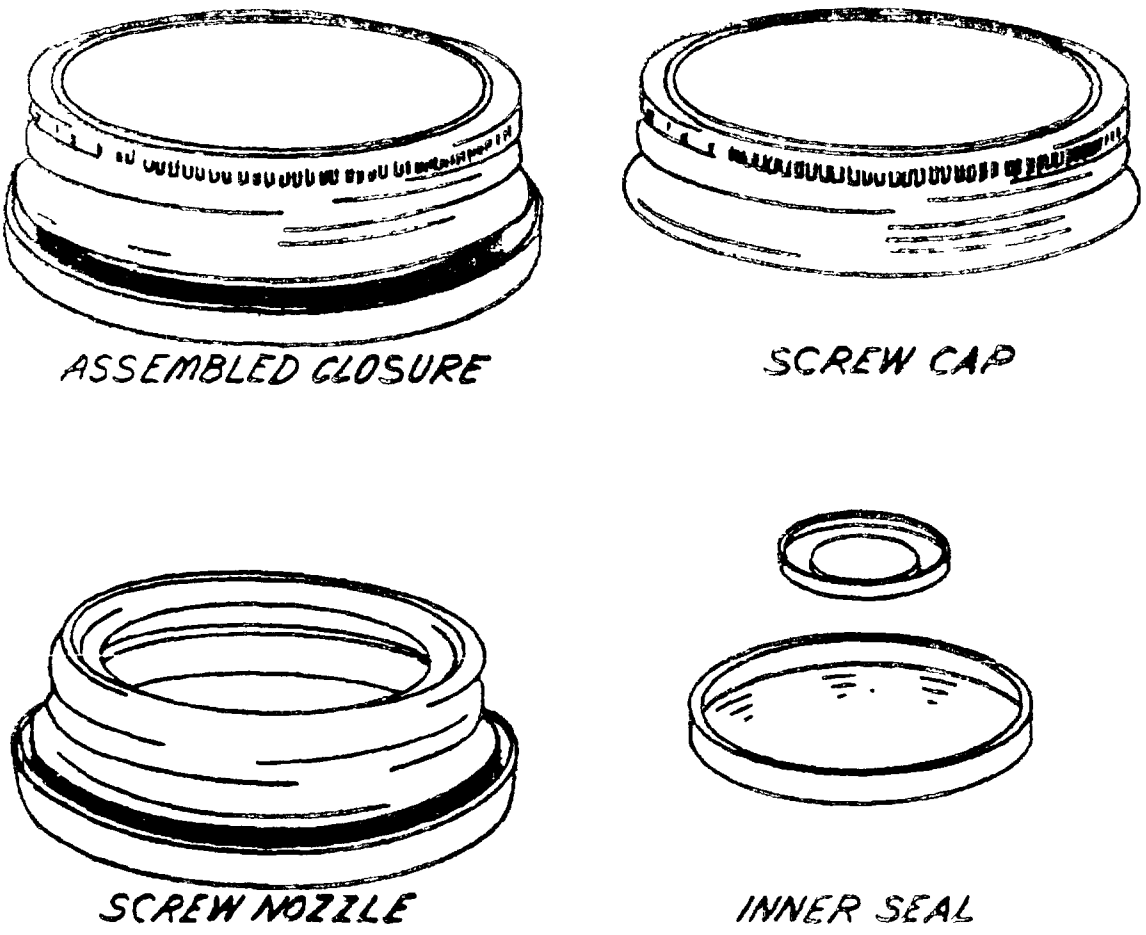

FIGURE 5 CLINCHED-IN TYPE NOZZLE CLOSURE WITH SCREW CAP AND INNER SEAL

Source: https://assist.dla.mil -- Downloaded: 2016-12-11T05:56Z
Check the source to verify that this is the current version before use.

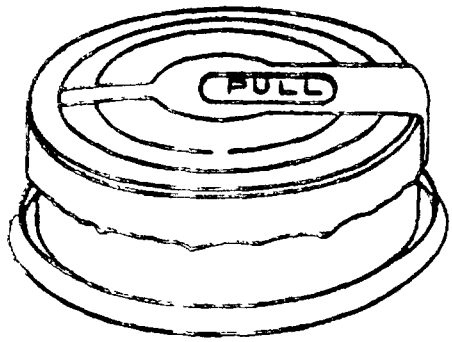

ASSEMBLED CLOSURE

SNAP CAP SEAL

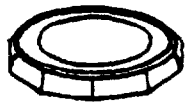

SNAP CAP

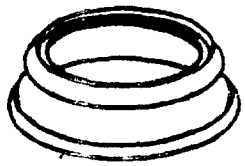

SNAP CAP NOZZLE

FIGURE 6 - CLINCH-IN TYPE NOZZLE CLOSURE, WITH SNAP CAP

Source: https://assist.dla.mil -- Downloaded: 2016-12-11T05:56Z
Check the source to verify that this is the current version before use.

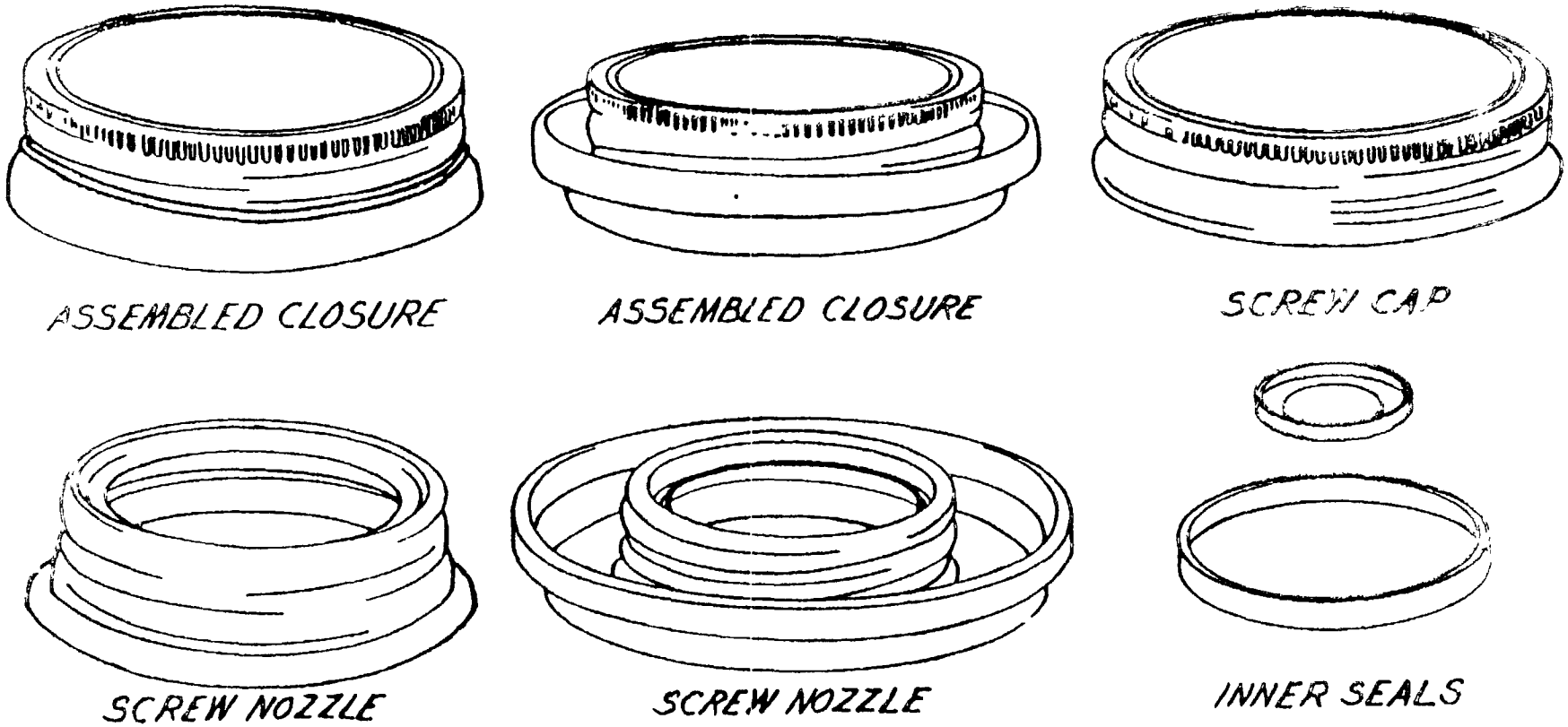

FIGURE 7 - CLINCH-ON TYPE NOZZLE CLOSURE, WITH SCREW CAP

Source: https://assist.dla.mil -- Downloaded: 2016-12-11T05:56Z
Check the source to verify that this is the current version before use.

ASSEMBLED CLOSURE

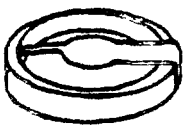

SNAP CAP SEAL

SNAP CAP

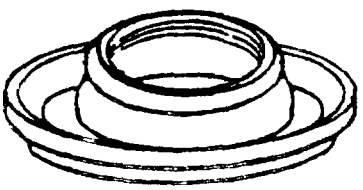

SNAP CAP NOZZLE

FIGURE 8 - CLINCH ON NOZZLE CLOSURE WITH SNAP-ON CAP

Source: https://assist.dla.mil -- Downloaded: 2016-12-11T05:56Z
Check the source to verify that this is the current version before use.

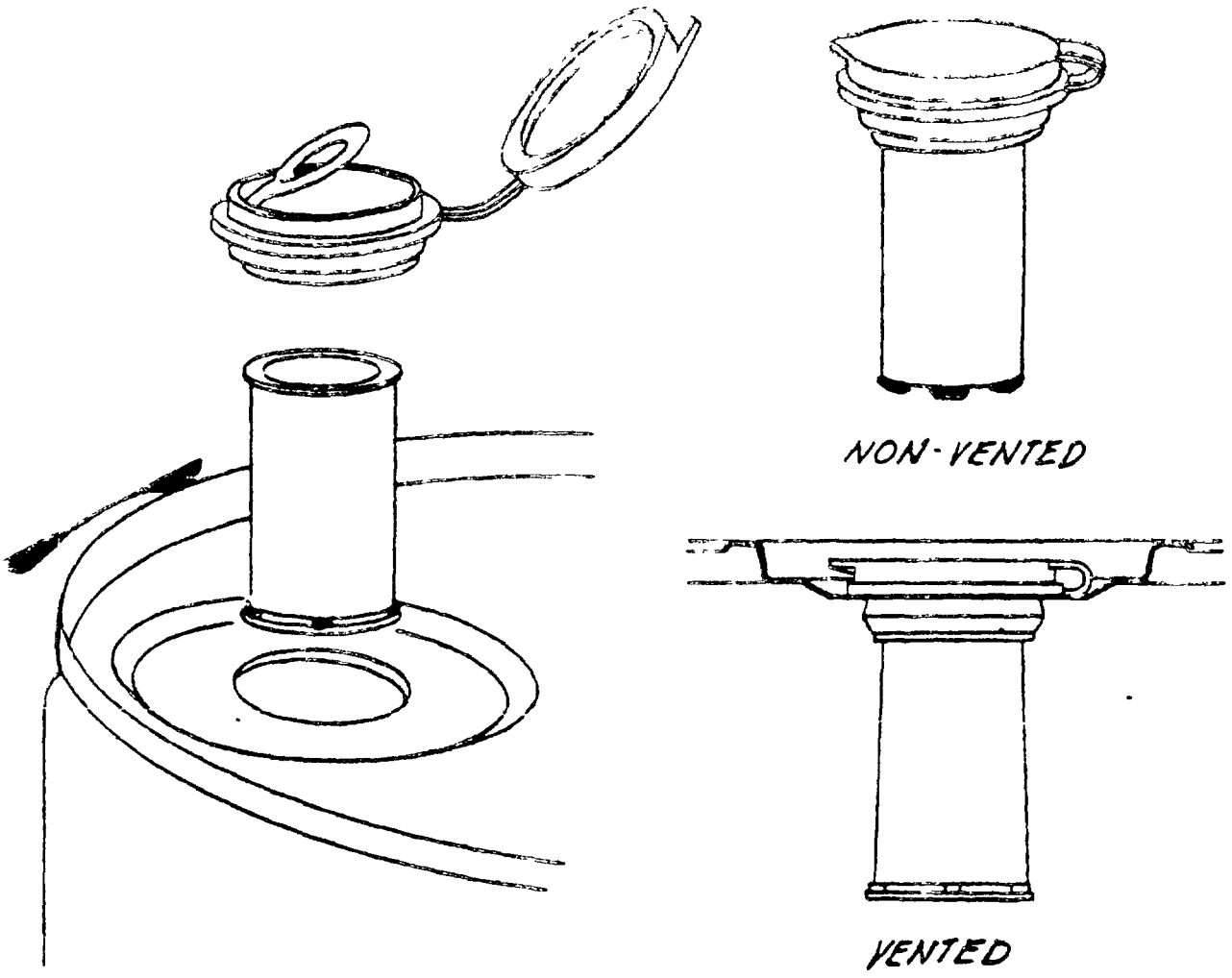

FIGURE 9 - PRESS-IN TYPE PLASTIC NOZZLE CLOSURE WITH PLASTIC PUSH PULL SPOUT

Source: https://assist.dla.mil -- Downloaded: 2016-12-11T05:56Z
Check the source to verify that this is the current version before use.

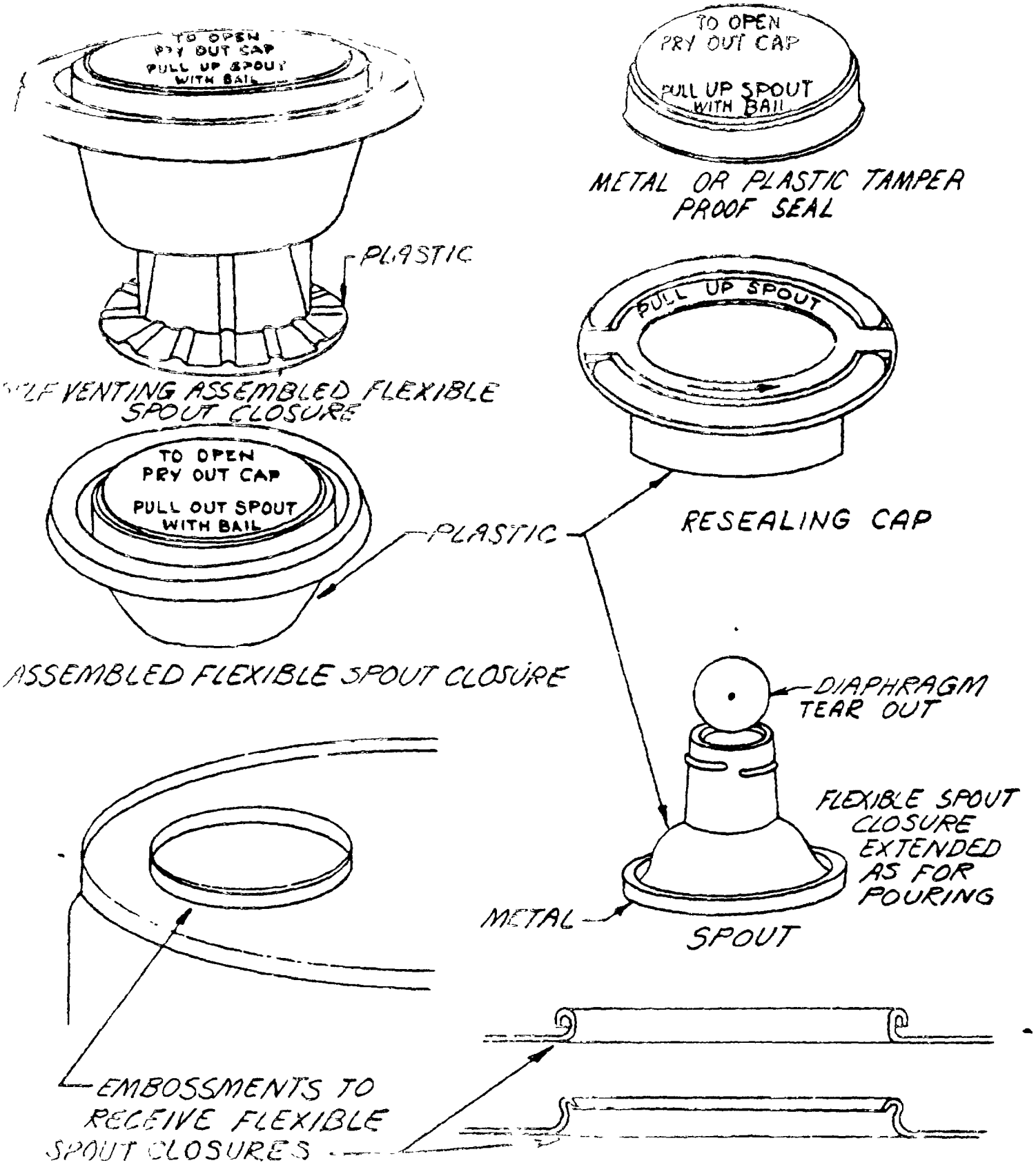

FIGURE 10 - FLEXIBLE SPOUTS

Source: https://assist.dla.mil -- Downloaded: 2016-12-11T05:56Z
Check the source to verify that this is the current version before use.

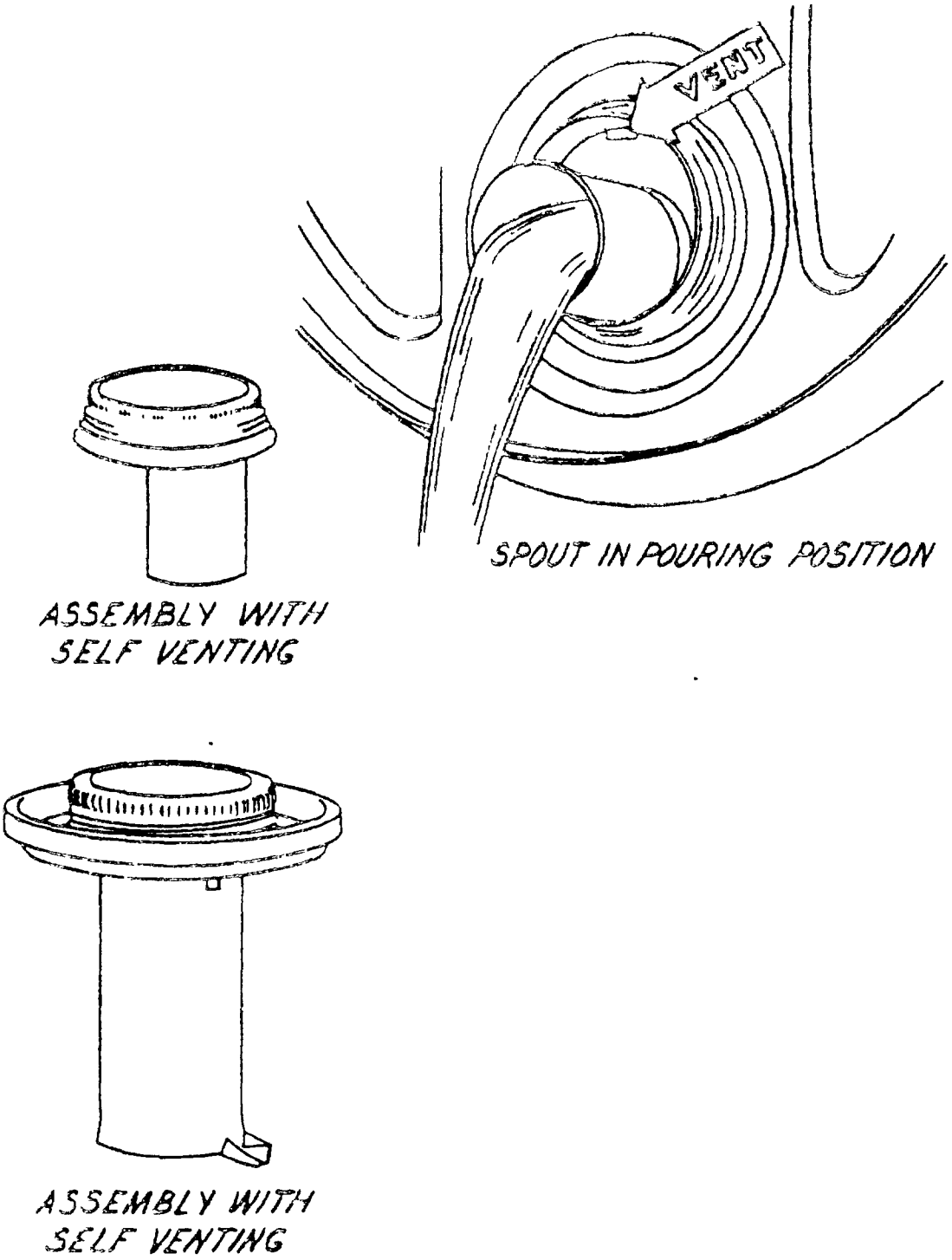

FIGURE 11 - SELF VENTING PUSHPULL SPOUTS

Source: https://assist.dla.mil -- Downloaded: 2016-12-11T05:56Z
Check the source to verify that this is the current version before use.

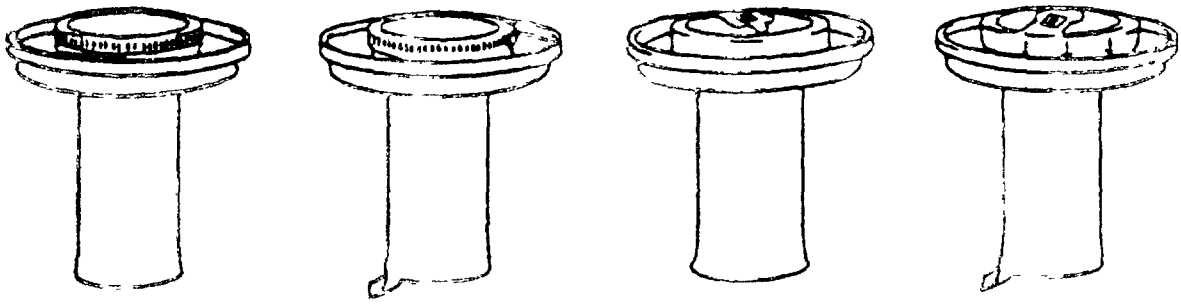

NON-VENTED VENTED NON-VENTED VENTED

WITH SCREW CAP WITH SNAP CAP

PUSHPULL SPOUT ASSEMBLIES - METAL SPOUTS
FOR CLINCH ON NOZZLE

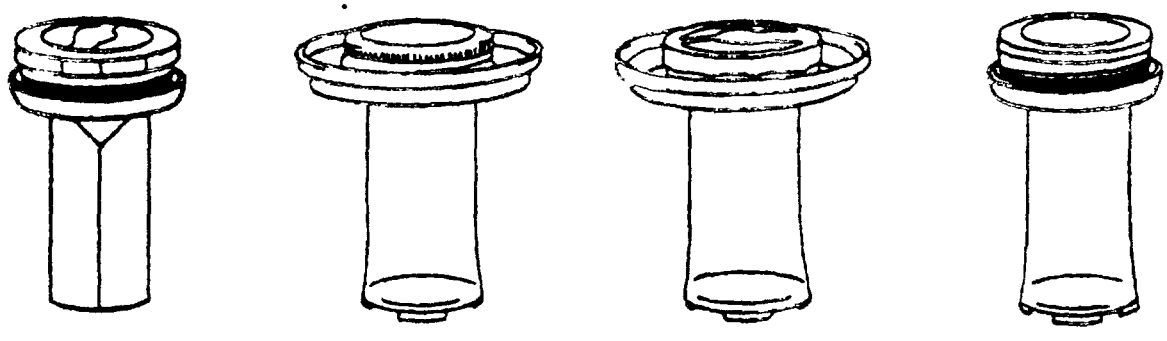

SNAP CAP SCREW CAP SNAP CAP SCREW CAP

PUSHPULL SPOUT ASSEMBLIES - PLASTIC SPOUTS
FOR CLINCH ON AND CLINCHED IN NOZZLE

FIGURE 12 - PUSHPULL SPOUTS

Source: https://assist.dla.mil -- Downloaded: 2016-12-11T05:56Z
Check the source to verify that this is the current version before use.

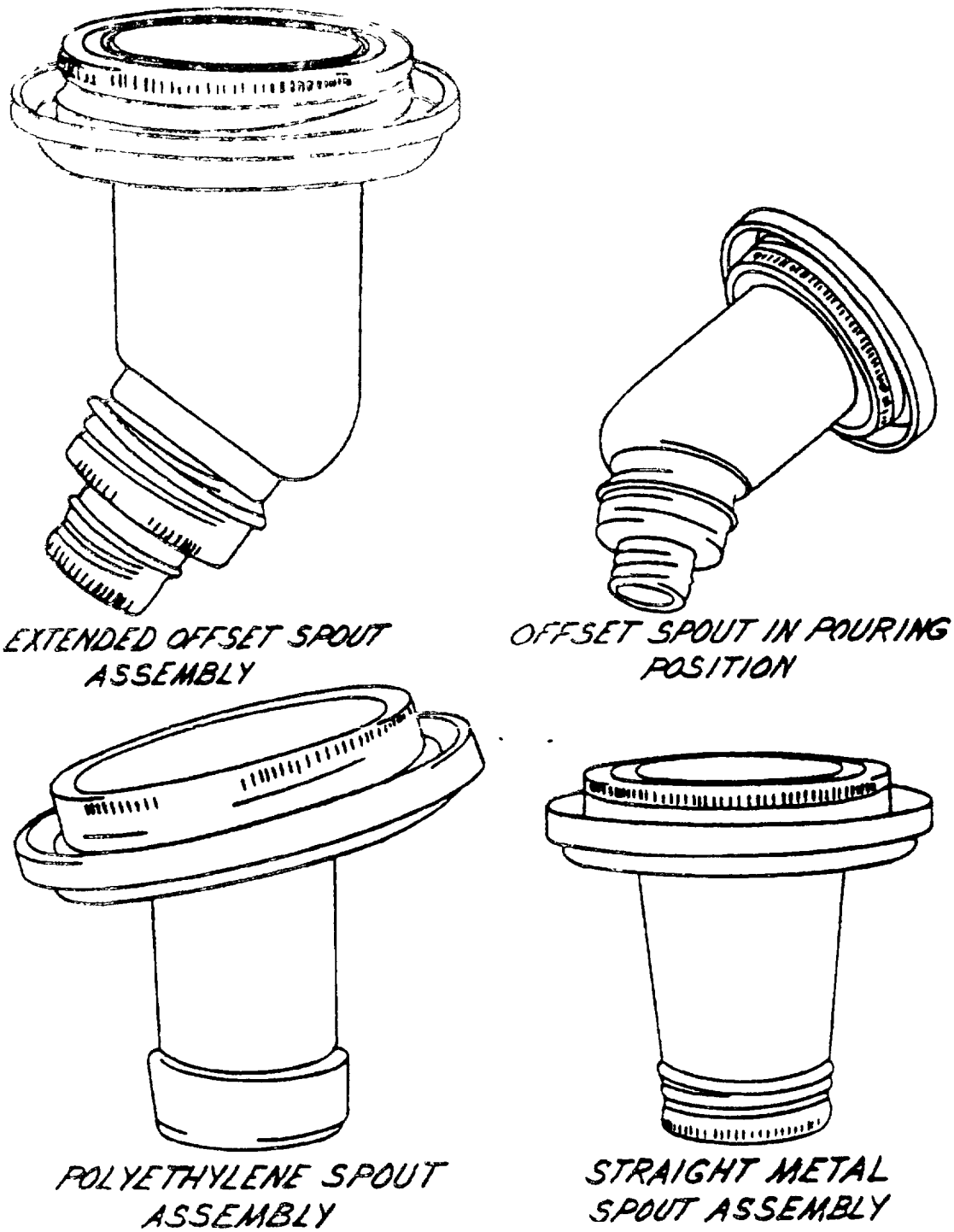

FIGURE 13 - REVERSIBLE SPOUTS

Source: https://assist.dla.mil -- Downloaded: 2016-12-11T05:56Z
Check the source to verify that this is the current version before use.

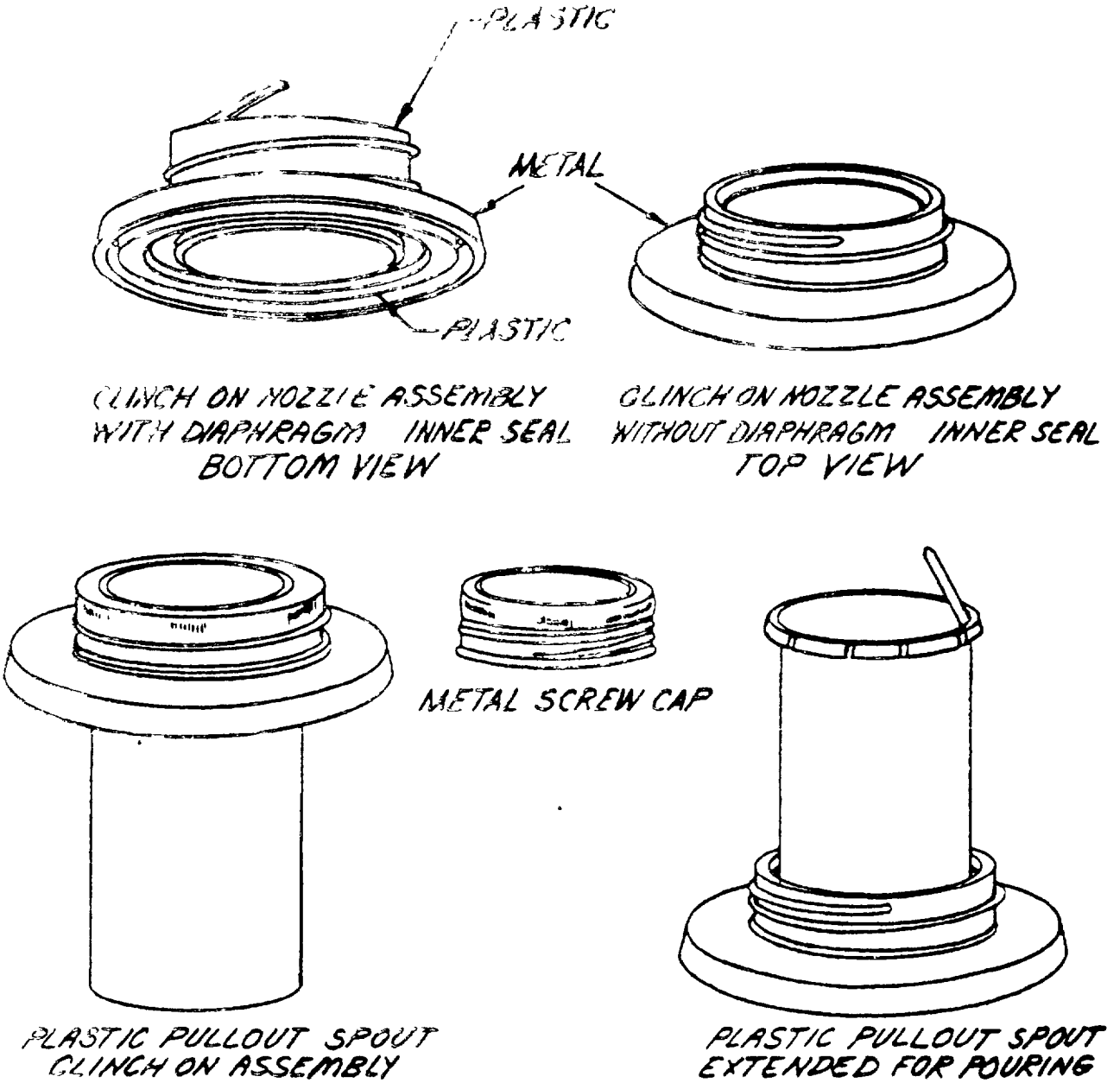

FIGURE 14 PLASTIC NOZZLE AND SPOUT WITH METAL CLINCH RING AND CAP

Source: https://assist.dla.mil -- Downloaded: 2016-12-11T05:56Z
Check the source to verify that this is the current version before use.

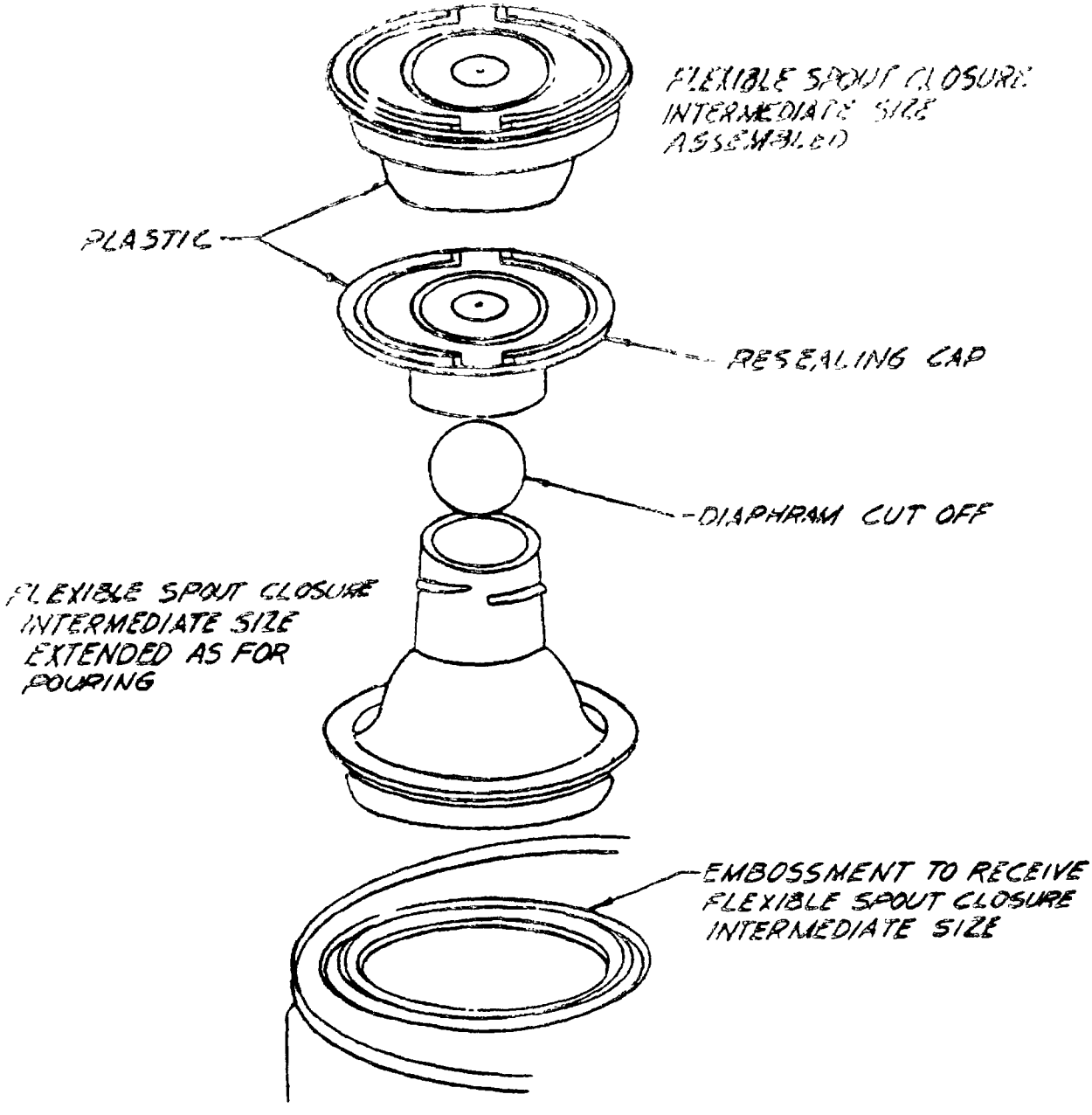

FIGURE 15 FLEXIBLE SPOUT CLOSURE-INTERMEDIATE SIZE

Source: https://assist.dla.mil -- Downloaded: 2016-12-11T05:56Z
Check the source to verify that this is the current version before use.

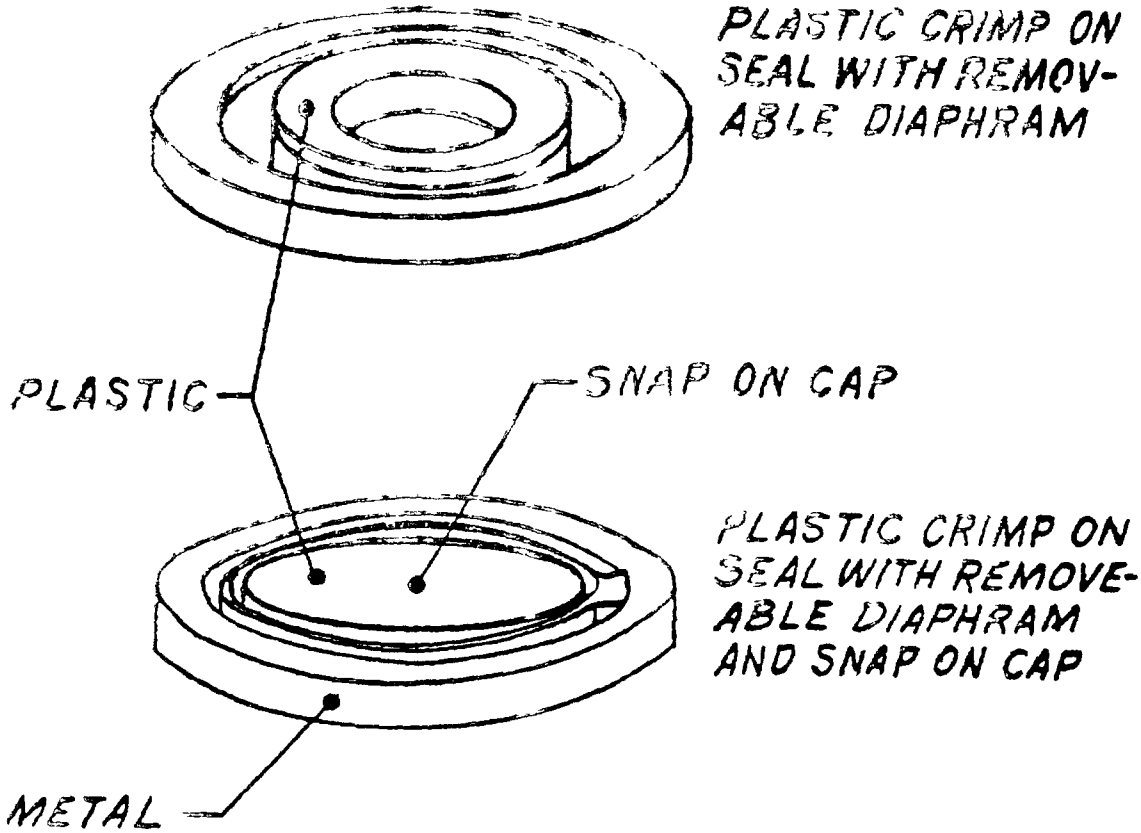

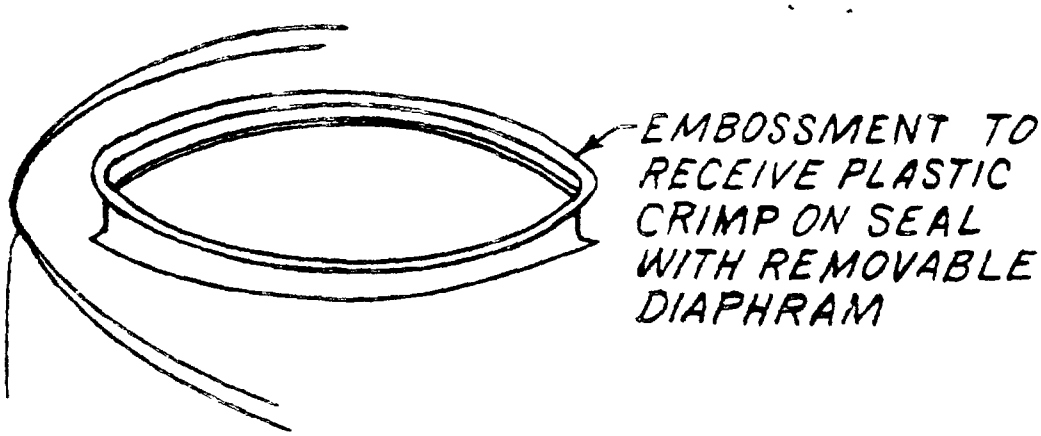

FIG. 16

PLASTIC CRIMP ON SEAL WITH REMOVABLE DIAPHRAM

Source: https://assist.dla.mil -- Downloaded: 2016-12-11T05:56Z
Check the source to verify that this is the current version before use.

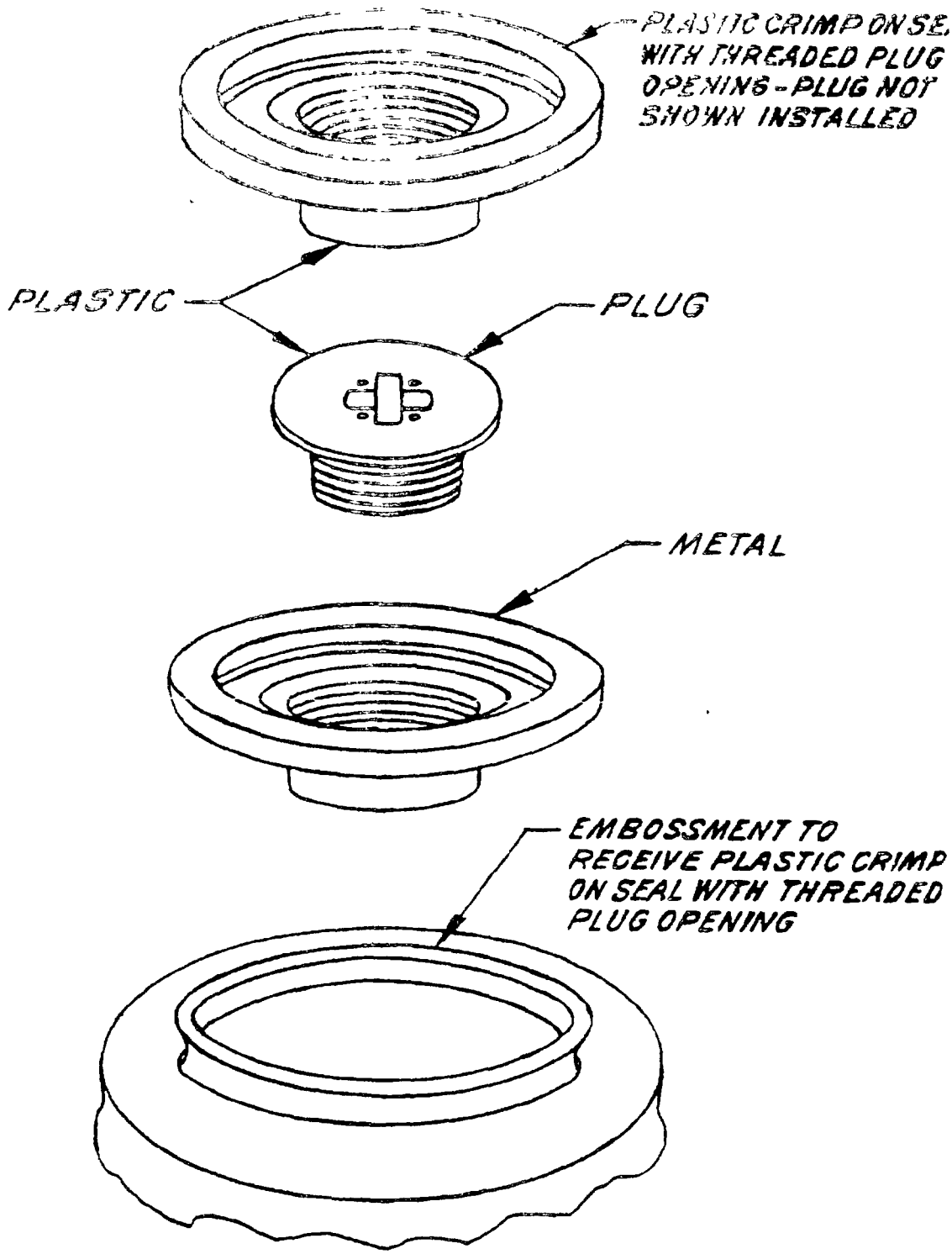

FIG. 17, PLASTIC CRIMP ON SEAL WITH THREADED PLUG OPENING

Source: https://assist.dla.mil -- Downloaded: 2016-12-11T05:56Z
Check the source to verify that this is the current version before use.

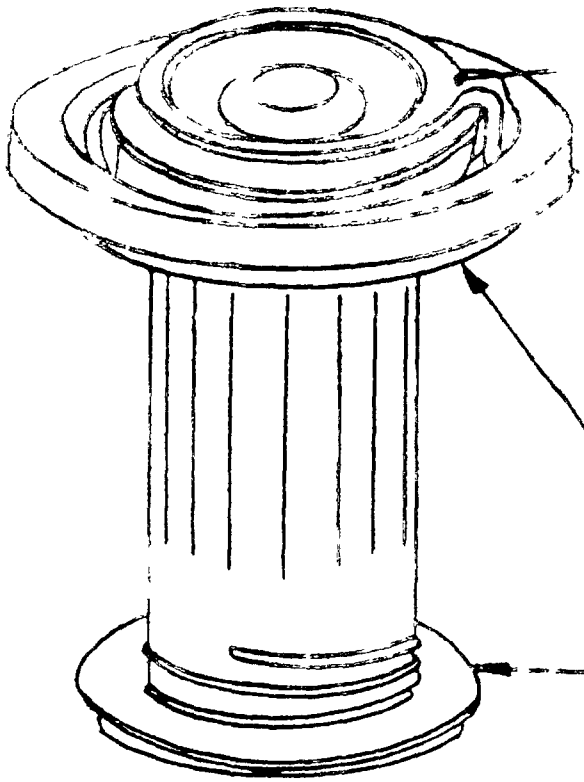

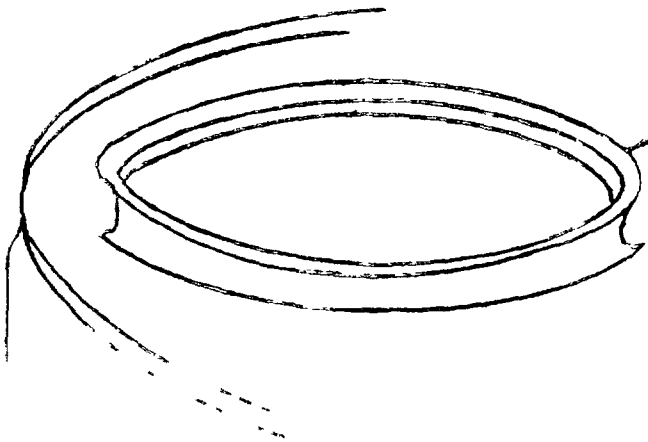

FIGURE 18 RIGID POUR SPOUT CLOSURE

Source: https://assist.dla.mil -- Downloaded: 2016-12-11T05:56Z
Check the source to verify that this is the current version before use.

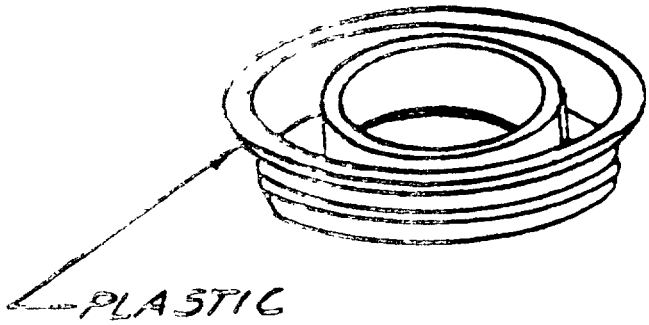

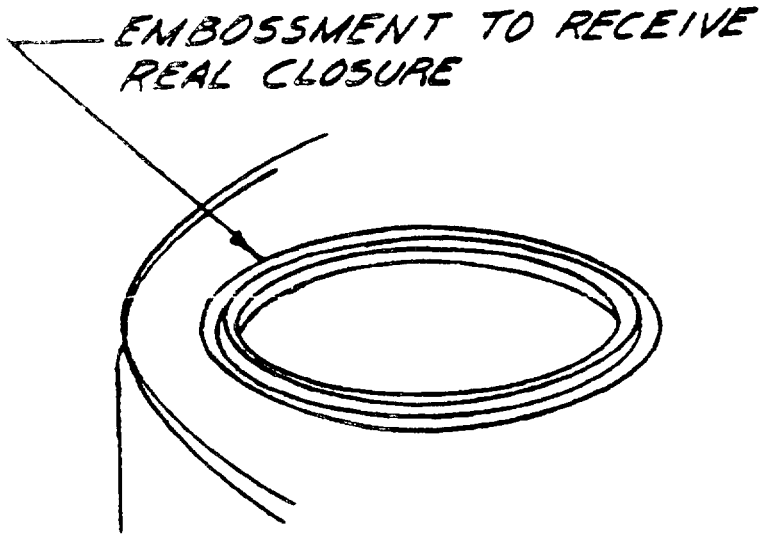

FIGURE 19 SEAL CLOSURE

Source: https://assist.dla.mil -- Downloaded: 2016-12-11T05:56Z
Check the source to verify that this is the current version before use.

MILITARY INTERESTS

Custodians

Army - GL
Navy - AS
Air Force - 69

Review Activities

Army - MD, EA
Air Force - 99
DLA - PS

User Activities

Navy - SA, SH, YD

CIVIL AGENCY COORDINATING ACTIVITIES:

COMMERCE-NBS
DCG
GSA-FSS
JUSTICE-FPI
USDA-AMS

PREPARING ACTIVITY:

Army - GL

Project No. 8110-0245

Orders for this publication are to be placed with General Services Administration, acting as an agent for the Superintendent of Documents. See section 2 of this specification to obtain extra copies and other documents referenced herein.

Source: https://assist.dla.mil -- Downloaded: 2016-12-11T05:56Z
Check the source to verify that this is the current version before use.

INSTRUCTIONS. In a continuing effort to make our standardization documents better, the DoD provides this form for submitting comments and suggestions for improvements. All users of military standardization documents are invited to provide suggestions. This form may be detached, folded along the lines indicated, taped along the loose edge (*DO NOT STAPLE*), and mailed. In block 5, be as specific as possible about particular problem areas such as wording which required interpretation, was too rigid, restrictive, loose, ambiguous, or was incompatible, and give proposed wording changes which would alleviate the problems. Enter in block 6 any remarks not related to a specific paragraph of the document. If block 7 is filled out, an acknowledgement will be mailed to you within 30 days to let you know that your comments were received and are being considered.

NOTE. This form may not be used to request copies of documents, nor to request waivers, deviations, or clarification of specification requirements on current contracts. Comments submitted on this form do not constitute or imply authorization to waive any portion of the referenced document(s) or to amend contractual requirements.

(Fold along this line)

(Fold along this line)

DEPARTMENT OF THE NAVY

OFFICIAL BUSINESS
PENALTY FOR PRIVATE USE $300

NO POSTAGE NECESSARY IF MAILED IN THE UNITED STATES

BUSINESS REPLY MAIL
FIRST CLASS PERMIT NO 12503 WASHINGTON D C

POSTAGE WILL BE PAID BY THE DEPARTMENT OF THE NAVY

ENGINEERING SPECIFICATIONS AND STANDARDS DEPARTMENT
(ESSDCODE 9321)
NAVAL AIR ENGINEERING CENTER
LAKEHURST, NJ 08733

Source: https://assist.dla.mil -- Downloaded: 2016-12-11T05:56Z
Check the source to verify that this is the current version before use.

STANDARDIZATION DOCUMENT IMPROVEMENT PROPOSAL

(See Instructions – Reverse Side)

1 DOCUMENT NUMBER

2 DOCUMENT TITLE

3a NAME OF SUBMITTING ORGANIZATION

4 TYPE OF ORGANIZATION *(Mark one)*

- ☐ VENDOR
- ☐ USER
- ☐ MANUFACTURER
- ☐ OTHER *(Specify)* _____

b ADDRESS *(Street, City, State, ZIP Code)*

5 PROBLEM AREAS

a Paragraph Number and Wording

b Recommended Wording

c Reason/Rationale for Recommendation

6 REMARKS

7a NAME OF SUBMITTER *(Last, First, MI)* – Optional

b WORK TELEPHONE NUMBER *(Include Area Code)* – Optional

c MAILING ADDRESS *(Street, City, State, ZIP Code)* – Optional

8 DATE OF SUBMISSION *(YYMMDD)*

(FOLD ON THIS LINE)

(FOLD ALONG THIS LINE)

DD FORM 1426, 82 MAR — PREVIOUS EDITIONS ARE OBSOLETE

Source: https://assist.dla.mil -- Downloaded: 2016-12-11T05:36Z
Check the source to verify that this is the current version before use.