METRIC

MIL-STD-1474E
15 April 2015
SUPERSEDING
MIL-STD-1474D
12 February 1997

DEPARTMENT OF DEFENSE
DESIGN CRITERIA STANDARD
NOISE LIMITS

AMSC 9542 AREA HFAC

Distribution Statement A: Approved for public release; distribution is unlimited

Source: https://assist.dla.mil -- Downloaded: 2016-10-21T10:43Z
Check the source to verify that this is the current version before use.

FOREWORD

1. This standard has been approved for use by all Departments and Agencies of the Department of Defense.

2. This standard provides specific noise limits and other requirements to equipment designers and manufacturers. It is intended to cover typical operational conditions. Required noise limits shall not be exceeded if the materiel is to be acceptable to the procuring activity.

3. This standard specifies the maximum permissible noise levels produced by military systems and the test requirements for measuring these levels. This document is based on the provisions of Department of the Army Pamphlet (DA PAM) 40-501, Chief of Naval Operations Instruction (OPNAVINST) 5100.23, OPNAVINST 5100.19, OPNAVINST 9640.1, Air Force Occupational Safety and Health Standard (AFOSH STD) 48-19, and AFOSH STD 48-20 for noise exposure criteria and Military Standard 1472 (MIL-STD-1472) for communications criteria. This standard is neither a hearing damage risk criterion nor a hearing conservation criterion. It is a set of design criteria.

4. Due to the possibility of unpredictable interactions of various noise sources during military operations, all new equipment, whether newly designed or purchased, should emit the lowest feasible noise level. Product and component selection criteria and procurement decisions should consider noise produced by equipment and, where possible, provide for comparison of noise levels between comparable products through databases such as the National Aeronautics and Space Administration (NASA) Buy Quiet program (http://buyquietroadmap.com/) or the National Institute for Occupational Safety and Health (NIOSH) database for powered hand tool noise and vibration (http://wwwn.cdc.gov/niosh-sound-vibration/).

5. The preferred method of noise control is source reduction, followed by enclosure or other engineering controls, use of personal protection equipment, and administratively limited exposure as the least preferred method. The effective noise reduction (level of protection) provided by hearing protective equipment should be considered when evaluating personnel exposures in accordance with DoD and Service policy (DODI 6055.12 and derivative documents) and Occupational Safety and Health Administration regulations (29 CFR 1910.95). Prior to exposing personnel to known system-related risks, the residual risks are accepted by the appropriate level of management. Potential impacts on operational safety including hostile detection and disruption of mission-essential communications should be considered in design requirements, system specifications, and test and evaluation criteria.

6. This military standard applies to all operations regardless of duration and availability of recovery periods; therefore, the criteria contained herein are more conservative than the Occupational Safety and Health Administration (OSHA) requirements and are to be used whenever feasible in lieu of OSHA standards. Department of Defense (DoD) policy can be found in Department of Defense Instruction (DODI) 6055.1 and DODI 6055.12.

Source: https://assist.dla.mil -- Downloaded: 2016-10-21T10:43Z
Check the source to verify that this is the current version before use.

7. Comments, suggestions, or questions and any pertinent data which may be of use in improving this document should be addressed to Commander, U.S. Army Aviation and Missile Research Development and Engineering Center, ATTN: RDMR-SET, Redstone Arsenal, AL 35898-5000 or emailed to streview@amrdec.army.mil. Since contact information can change, users may want to verify the currency of this address information using the Acquisition Streamlining and Standardization Information System (ASSIST) Online database at https://assist.dla.mil.

Source: https://assist.dla.mil -- Downloaded: 2016-10-21T10:43Z
Check the source to verify that this is the current version before use.

TABLE OF CONTENTS

PARAGRAPH PAGE

1. Introduction 1
1.1 Scope 1
1.2 Applicability 1
1.3 Purpose 1

2. Applicable Documents 1
2.1 General 1
2.2 Government documents 2
2.2.1 Specifications, standards, and handbooks 2
2.2.2 Other Government documents, drawings, and publications 2
2.3 Non-Government publications 3
2.4 Order of precedence 5

3. Definitions 5
3.1 Definitions 5
3.1.1 Auditory Hazard Assessment Algorithm for Humans 5
3.1.2 Cone index 5
3.1.3 Microphones 5
3.2 Abbreviations 5

4. General Requirements 7
4.1 Systems and subsystems 7
4.1.1 Total system noise 7
4.1.2 Component noise 8
4.1.3 Government furnished equipment 8
4.2 Noise hazard 8
4.2.1 Protection from hazardous noise 8
4.2.2 Noise hazard signs 8
4.2.3 Noise hazards 10
4.3 Speech communication 10
4.3.1 Predictors of speech intelligibility 10
4.3.2 Frequency range 11
4.3.3 Modified rhyme testing 11

Source: https://assist.dla.mil -- Downloaded: 2016-10-21T10:43Z
Check the source to verify that this is the current version before use.

4.4 Pulsating equipment 12
4.5 Reporting by Government agencies 12
4.6 Systems, equipment, and facilities 12
4.6.1 Steady-state noise 12
4.6.2 Impulsive noise 13
4.6.3 Facilities 14
4.7 Instrumentation 14
4.7.1 General 14
4.7.2 Transducer orientation 14
4.7.3 Microphones 16
4.7.4 Sound level meters 19
4.7.5 Recording equipment 20
4.7.6 Octave band filter sets 20
4.8 Calibration 20
4.8.1 Laboratory calibration 20
4.8.2 Field calibration 20
4.9 Data 21
4.9.1 Metrics 21
4.9.2 Repeatability 21
4.9.3 Correction factors 22
4.9.4 Scaling 22
4.9.5 Acoustic reference level 22
4.10 Ground equipment system under test 22
4.10.1 SUT conditions 22
4.10.2 Ground vehicle speed and gear 22
4.10.3 Load conditions 22
4.10.4 System operations 22
4.10.5 New equipment 22
4.10.6 Speed 22
4.10.7 Auxiliary equipment 22
4.10.8 Equipment openings 23
4.10.9 Construction and materials-handling equipment 23
4.11 Testing 23
4.11.1 Test conditions 23
4.11.2 Test schedule 23
4.11.3 Testing cycles 24
4.11.4 Sample size 24

Source: https://assist.dla.mil -- Downloaded: 2016-10-21T10:43Z
Check the source to verify that this is the current version before use.

5. Detailed Requirements 24
5.1 Individual appendixes 24
5.2 Hearing conservation 24

6. Notes 24
6.1 Intended use 24
6.2 Acquisition requirements 25
6.3 Associated data item descriptions 25
6.4 Subject term (key word) listing 26
6.5 Changes from previous issue 27
6.5.1 Marginal notations 27
6.5.2 Community annoyance 27
6.6 Guidance documents 27

INDIVIDUAL APPENDIXES

Appendix A – Steady-state noise requirements for personnel-occupied areas 29
Appendix B – Impulsive noise requirements for personnel-occupied areas 35
Appendix C – Aural non-detectability requirements 55
Appendix D – Aircraft noise requirements 69
Appendix E – Shipboard equipment noise requirements 87
Appendix F – Shipboard compartment noise requirements 103

FIGURES

1 Noise hazard signs 9
2 Angle of incidence 15
3 Examples of microphone configurations 17

TABLES

I Speech intelligibility for voice communications systems 11
II Ear and microphone height above supporting surface for various operational positions 18
III Ambient noise corrections 23

CONCLUDING MATERIAL 117

Source: https://assist.dla.mil -- Downloaded: 2016-10-21T10:43Z
Check the source to verify that this is the current version before use.

1. SCOPE

1.1 Scope. This standard establishes acoustic noise limits and prescribes testing requirements and measurement procedures for determining conformance to the noise limits stated herein. The standard specifies sound pressure level limits and measurement procedures to promote personnel safety, speech intelligibility, and security from acoustic detection and recognition. Acoustical noise limits for determining conformance to community annoyance requirements are beyond the scope of this standard. Noise limits for community annoyance are covered by local laws and statutes. DoD materiel (motor vehicles, construction and material handling equipment, mobile generator sets, and portable air compressors) may have to comply with these local laws and statutes anywhere in the world they operate.

1.2 Applicability. This standard applies to the acquisition and product improvement of all designed or purchased (non-developmental items) facilities, systems, subsystems, and equipment that emit acoustic noise or contain sources of noise. This standard is intended to address noise levels emitted during the full range of typical operational conditions and over the life cycle of the system under consideration. It covers tests for steady-state noise for military vehicles, aircraft, ships, general equipment, portable shelters and impulsive noise from weapons and explosive-ordnance materiel. Fixed physical plant facilities, such as real estate and improvements thereto, and permanent habitable real property structures are covered under other DoD policy and standards.

1.3 Purpose. This standard provides criteria for designing materiel having noise levels that:

a. Minimize the risk of permanent noise induced hearing loss,

b. Permit intelligible speech communication in noisy environments,

c. Minimize aural detection by an enemy, and

d. Provide acceptable habitability of personnel quarters including berthing spaces.

2. APPLICABLE DOCUMENTS

2.1 General. The documents listed in this section are specified in Sections 3, 4, or 5 of this standard, and the individual appendixes. This section does not include documents cited in other sections of this standard or recommended for additional information or as examples. While every effort has been made to ensure the completeness of this list, document users are cautioned that they must meet all specified requirements of documents cited in Sections 3, 4, or 5 of this standard, and individual appendixes, whether or not they are listed.

Source: https://assist.dla.mil -- Downloaded: 2016-10-21T10:43Z
Check the source to verify that this is the current version before use.

2.2 Government documents.

2.2.1 Specifications, standards, and handbooks. The following specifications, standards, and handbooks form a part of this document to the extent specified herein. Unless otherwise specified, the version numbers of these documents are those cited in the solicitation or contract.

DEPARTMENT OF DEFENSE STANDARDS:

MIL-STD-882	System Safety
MIL-STD-1472	Human Engineering

DEPARTMENT OF DEFENSE HANDBOOKS:

MIL-HDBK-1473	Color and Marking of Army Materiel
MIL-HDBK-1908	Definitions of Human Factors Terms

(Copies of these are available online at http://quicksearch.dla.mil).

2.2.2 Other Government documents, drawings, and publications. The following other Government documents, drawings, and publications form a part of this document to the extent specified herein. Unless otherwise specified, the issues are those cited in the solicitation or contract.

DEPARTMENT OF DEFENSE

DODD 4715.1	Environment, Safety, and Occupational Health
DODI 5000.02	Operation of the Defense Acquisition System
DODI 6055.12	Hearing Conservation Program

CHIEF OF NAVAL OPERATIONS

OPNAVINST 5100.19	Navy Safety and Occupational Health (SOH) Program Manual for Forces Afloat

U.S. ARMY HUMAN ENGINEERING LABORATORY

HEL TM 3-85	Proposed Aural Nondetectability Limits for Army Materiel

Source: https://assist.dla.mil -- Downloaded: 2016-10-21T10:43Z
Check the source to verify that this is the current version before use.

U.S. ARMY PUBLIC HEALTH COMMAND

Technical Guide 338	Criteria and Procedures for Auditory Health Hazard Assessment of Impulse Noise (Blast Overpressure)

(Copies of specifications, standards, and other publications required by contractors in connection with specific acquisition functions should be obtained from the procuring activity or as directed by the contracting officer.)

2.3 Non-Government publications. The following documents form a part of this document to the extent specified herein. Unless otherwise specified, the issues of these documents are those cited in the solicitation or contract.

AMERICAN NATIONAL STANDARDS INSTITUTE (ANSI)

ANSI/ASA S1.1	Acoustical Terminology
ANSI/ASA S1.4	American National Standard Electroacoustic – Sound Level Meters – Part 1: Specifications
ANSI/ASA S1.6	Preferred Frequencies, Frequency Levels, and Band Numbers for Acoustical Measurements
ANSI/ASA S1.11, Part 1	Electroacoustics – Octave-Band and Fractional-Octave-Band Analog and Digital Filters – Part 1: Specifications
ANSI/ASA S1.15, Part 1	Measurement Microphones – Part 1: Specifications for Laboratory Standard Microphones
ANSI S1.15, Part 2	Measurement Microphones – Part 2: Primary Method for Pressure Calibration of Laboratory Standard Microphones by the Reciprocity Technique
ANSI/ASA S1.40	American National Standard Specifications and Verification Procedures for Sound Calibrators
ANSI/ASA S2.16	Vibratory Noise Measurements and Acceptance Criteria of Shipboard Equipment
ANSI/ASA S2.20	Estimating Air Blast Characteristics for Single Point Explosions in Air, with a Guide to Evaluation of Atmospheric Propagation and Effects
ANSI/ASA S3.2	Method for Measuring the Intelligibility of Speech Over Communication Systems
ANSI/ASA S3.5	American National Standard Methods for Calculation of the Speech Intelligibility Index
ANSI/ASA S12.6	Methods for Measuring the Real-Ear Attenuation of Hearing Protectors

Source: https://assist.dla.mil -- Downloaded: 2016-10-21T10:43Z
Check the source to verify that this is the current version before use.

ANSI/ASA S12.16	American National Standard Guidelines for the Specification of Noise of New Machinery
ANSI/ASA S12.42	Methods for the Measurement of Insertion Loss of Hearing Protection Devices in Continuous or Impulsive Noise Using Microphone-in-the-Real-Ear or Acoustic Test Fixture Procedures
ANSI/ASA S12.67	Pre-Installation Airborne Sound Measurements and Acceptance Criteria of Shipboard Equipment
ANSI/ASA S12.68	Methods of Estimating Effective A-Weighted Sound Pressure Levels When Hearing Protectors are Worn
ANSI/ASA S12.75	Methods for the Measurement of Noise Emissions from High Performance Military Jet Aircraft
ANSI/AMCA 300	Reverberant Room Method for Sound Testing of Fans
ANSI/ASHRAE Standard 62.1	Ventilation for Acceptable Indoor Air Quality

(Requests for copies should be addressed to the American National Standards Institute (ANSI) Attn: Customer Service Department, 25 W 43rd Street, 4th Floor, New York, NY, 10036, Phone: 212-642-4980, Fax: 212-302-1286, E-mail: info@ansi.org.)

INTERNATIONAL ORGANIZATION FOR STANDARDIZATION (ISO)

ISO 26101	Acoustics – Test Methods for the Qualification of Free-Field Environments

(Requests for copies should be addressed to the International Organization for Standardization (ISO), Geneva 20, Switzerland or online at www.iso.org.)

SOCIETY OF AUTOMOTIVE ENGINEERS (SAE)

SAE J184	Qualifying a Sound Data Acquisition System (DoD Adopted)

(Requests for copies should be addressed to the Society of Automotive Engineers, 400 Commonwealth Drive, Warrendale, PA 15096-0001.)

SOCIETY OF NAVAL ARCHITECTS AND MARINE ENGINEERS (SNAME)

T&R Bulletin 3-37	Design Guide for Shipboard Airborne Noise Control

Source: https://assist.dla.mil -- Downloaded: 2016-10-21T10:43Z
Check the source to verify that this is the current version before use.

(Requests for copies should be addressed to the Society of Naval Architects & Marine Engineers, 610 Pavonia Avenue, Jersey City, NJ, 07306, Phone: 800-798-2188, E-mail: tfaix@sname.org.)

2.4 Order of precedence. Unless otherwise noted herein or in the contract, in the event of a conflict between the text of this document and the references cited herein, the text of this document takes precedence. Nothing in this document, however, supersedes applicable laws and regulations unless a specific exemption has been obtained.

3. DEFINITIONS

3.1 Definitions. Unless defined below, terms are defined per MIL-HDBK-1908. Terms not appearing in MIL-HDBK-1908, are defined per ANSI/ASA S1.1.

3.1.1 Auditory Hazard Assessment Algorithm for Humans (AHAAH). A mathematical model of the ear created to provide risk evaluation for impulsive noise. (See B-A.3.1 of Appendix B, Annex A, for information on obtaining the software.)

3.1.2 Cone index. A measure of soil moisture, content, and compressibility.

3.1.3 Microphones. Per ANSI/ASA S1.1, a microphone is an electroacoustic transducer that produces electric signals when excited by acoustic signals. Also per ANSI/ASA S1.1, a transducer is a device designed to receive an input signal of a given kind while providing an output signal of a different kind, in such a manner that the desired characteristics of the input signal appear in the output signal, within specified limits. Therefore, by definition, all microphones are transducers, but not all transducers are microphones. While the differences in the two terms are recognized, in this standard, the terms “microphones” and “transducers” are both used in order to maintain consistency with the terms often used with test instrumentation.

3.2 Abbreviations. The abbreviations used in this standard are defined as follows:

AFOSH STD	Air Force Occupation Safety and Health Standard
AHAAH	Auditory Hazard Assessment Algorithm for Humans
AI	Articulation Index
AMD	air moving device
AMSC	Acquisition Management Systems Control
ANSI	American National Standards Institute
APU	auxiliary power unit
ARL	U.S. Army Research Laboratory
ARU	auditory risk unit
ASA	Acoustical Society of America
ASCII	American Standard Code for Information Interchange
ASHRAE	American Society of Heating, Refrigerating, and Air-Conditioning Engineers

Source: https://assist.dla.mil -- Downloaded: 2016-10-21T10:43Z
Check the source to verify that this is the current version before use.

ASSIST	Acquisition Streamlining and Standardization Information System
CFR	Code of Federal Regulations
COTS	commercial-off-the-shelf
cm	centimeters
CTS	compound threshold shift
DA PAM	Department of the Army Pamphlet
dB	decibel [re 20 microPascals (20μPa)]
dBA	decibel A-weighted scale [re 20 microPascals (20μPa)]
dBP	decibel unweighted (peak) [re 20 microPascals (20μPa)]
DI-HFAC	human factors data item description
DID	data item description
DoD	Department of Defense
DODD	Department of Defense Directive
DODI	Department of Defense Instruction
DRC	damage risk criterion
EPA	Environmental Protection Agency
ft	feet
GFE	government furnished equipment
HIGE	hover in ground effect
HOGE	hover out of ground effect
HPD	hearing protection device
HPM	Hearing Protection Module
Hz	Hertz (cycles per second)
IPIL	impulsive peak insertion loss
in	inches
ISO	International Organization for Standardization
kHz	kilohertz
km	kilometers
km/h	kilometers per hour
kPa	kilopascals
kPa/g	kilopascals per unit acceleration
L_A	A-weighted sound pressure level
L_{Aeq}	A-weighted sound pressure level averaged over a specific time period
L_C	C-weighted sound pressure level
L_{IAeq}	A-weighted sound pressure level of the impulse(s) averaged over a specific time period
μPa	microPascal
μs	microsecond
m	meters
MIL-HDBK	military handbook
MIL-STD	military standard
mi	miles
mm	millimeters

Source: https://assist.dla.mil -- Downloaded: 2016-10-21T10:43Z
Check the source to verify that this is the current version before use.

mph	miles per hour
MRT	modified rhyme test
ms	millisecond
mW	milliwatt
NASA	National Aeronautics and Space Administration
NATO	North Atlantic Treaty Organization
NATO STANAG	NATO standardization agreement
NCPP	noise control program plan
NDI	non-developmental item
NIHL	noise induced hearing loss
NIOSH	National Institute for Occupational Safety and Health
OPNAVINST	Chief of Naval Operations Instruction
OSHA	Occupational Health and Safety Administration
PD	proportional dose
psi/g	pounds per square inch per unit acceleration
PTS	permanent threshold shift
REAT	real ear at threshold
RFP	request for proposal
rms	root mean square
SAE	Society of Automotive Engineers
SII	Speech Intelligibility Index
SME	subject matter expert
SNAME	Society of Naval Architects and Marine Engineers
SPL	sound pressure level
STI	Speech Transmission Index
STOL	short take-off and landing
STOVL	short take-off and vertical landing
SUT	system under test
TDE	total daily exposure
TOGW	take-off gross weight
TTS	temporary threshold shift
TWA	time-weighted average
VTOL	vertical take-off and landing

4. GENERAL REQUIREMENTS

4.1 Systems and subsystems. Systems and subsystems shall be procured using the design order of precedence in MIL-STD-882 by eliminating hazards through design selection, incorporating safety devices, providing warning devices, and developing procedures and training.

4.1.1 Total system noise. Subsystems, sets, groups, and units including such items as air conditioners, heaters, input/output devices, printers, and auxiliary equipment, shall be selected, integrated, and installed in such a manner that noise produced by the entire system does not exceed the requirements of this standard.

Source: https://assist.dla.mil -- Downloaded: 2016-10-21T10:43Z
Check the source to verify that this is the current version before use.

4.1.2 Component noise. Both individual equipment and components shall be selected and designed for noise control. Selection and design criteria for specific system components or "stand-alone" products shall specify acceptable levels or preferred ranges of noise for components (e.g., pumps, fans, compressors, generators). These shall be specified as noise levels measured under standard conditions or sound power levels, estimated from noise measurements. Procurement evaluation criteria shall include the contribution of noise as a selection criterion in purchase decisions where the system may create hazardous exposure to noise.

4.1.3 Government furnished equipment (GFE). The use of GFE shall not eliminate the requirement that the total system conform to this standard. GFE causing the total system noise to exceed permissible levels shall be brought to the attention of the procuring activity.

4.2 Noise hazard.

4.2.1 Protection from hazardous noise. Source noise reduction shall be the primary means to protect personnel from hazardous noise. Hearing protectors and administrative measures such as warning signs shall not be solely relied upon, unless all noise reduction design approaches have been pursued. Steady-state levels shall be less than 85 decibels A-weighted (dBA) and peak-pressure levels of impulsive noise less than 140 dBP, at the ear (protected or unprotected), at all personnel locations during normal operations.

4.2.1.1 Personal protective equipment. Where personal protective equipment is used to provide noise reduction, the method specified in ANSI/ASA S12.68 or equivalent shall be used to compute the effective noise exposure using attenuation measured in accordance with ANSI/ASA S12.6 and ANSI/ASA S12.42. The method(s) used shall be documented. Fit testing of the hearing protection device should be performed, where feasible.

4.2.1.2 Helmets and communication headsets. Noise attenuation properties of helmets and communication headsets should be considered when assessing noise levels at the ear provided attenuation of these devices have been measured in accordance with ANSI/ASA S12.6 and ANSI/ASA S12.42, as required.

4.2.2 Noise hazard signs. Where individual requirements specify posting of noise hazard areas, signs should conform to ANSI/ASHRAE Standard 62.1, and the danger signs provisions in MIL-HDBK-1473, as applicable (see Figure 1). They shall be clearly visible and legible to all personnel that might be exposed to the hazard, to include crew and passengers. This provision shall not apply to the exteriors of military combat equipment.

4.2.2.1 Steady-state noise signs. Areas with levels equal to or above 85 dBA shall be posted with noise hazard signs; Figure 1 is an example that may be used. Refer to component hearing conservation policy for more specific requirements (see 6.6).

Source: https://assist.dla.mil -- Downloaded: 2016-10-21T10:43Z
Check the source to verify that this is the current version before use.

4.2.2.2 Impulsive noise signs. Areas with impulsive levels equal to or above 140 dBP shall be posted with noise hazard signs; Figure 1 is an example that may be used. Refer to component hearing conservation policy for more specific requirements (see 6.6).

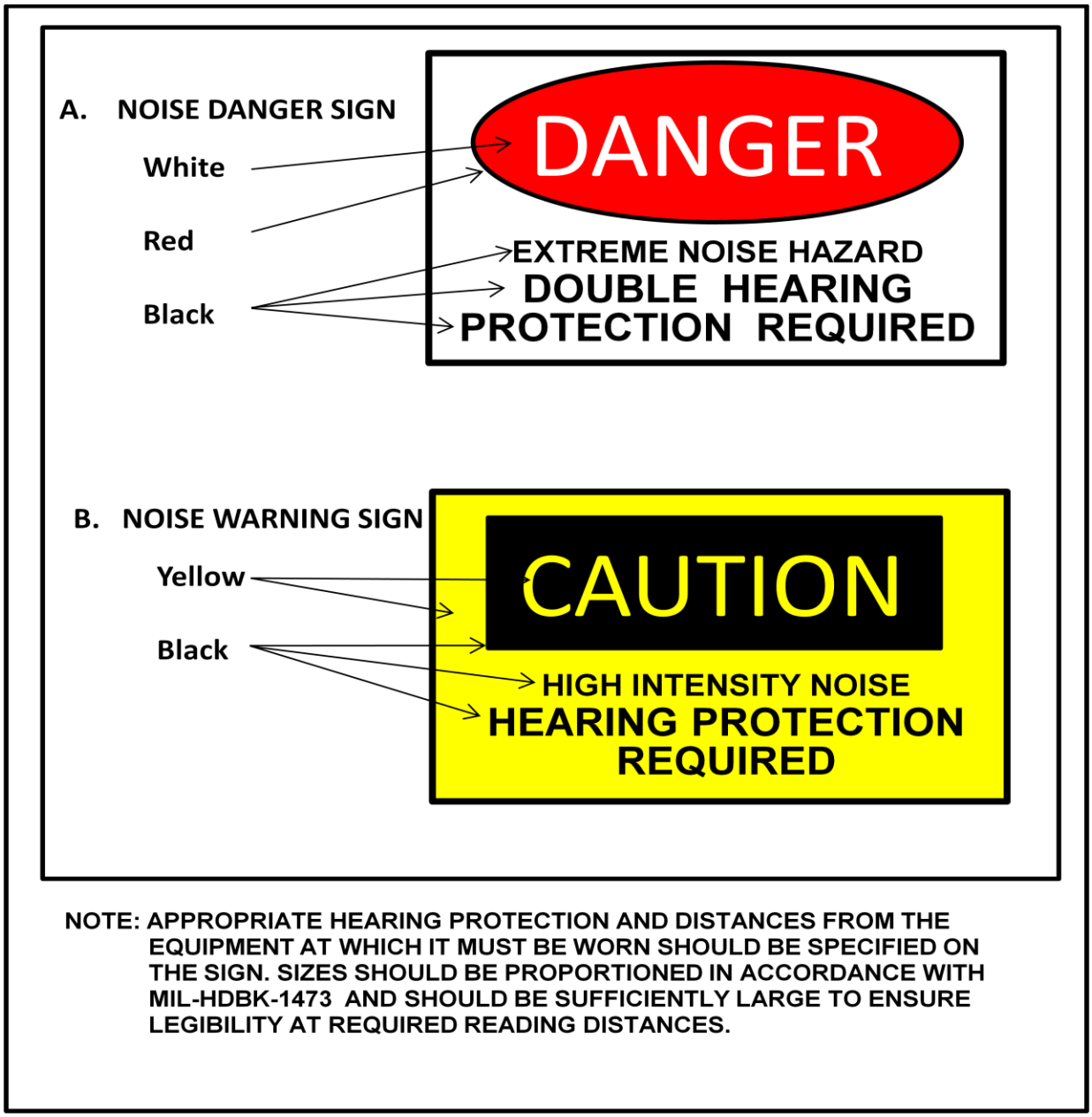

FIGURE 1. Noise hazard signs.

4.2.3 Noise hazards.

Source: https://assist.dla.mil -- Downloaded: 2016-10-21T10:43Z
Check the source to verify that this is the current version before use.

4.2.3.1 Steady-state noise design limits to minimize hearing loss. The procuring activity shall select a sound pressure level (SPL) limit from the following for personnel locations in and around the system:

a. Limit A – SPL shall not be equal to or exceed 85 dBA.
b. Limit B – SPL shall not be equal to or exceed an 8-hour time weighted average of 85 dBA.
c. Limit C – SPL shall not be equal to or exceed an 8-hour time weighted average of 85 dBA at the ear of all personnel wearing hearing protection.

Limit A shall be selected whenever possible to meet the objective of DoD hearing conservation policy expressed in DODI 6055.12. Limit B shall be chosen when 85 dBA would be equaled or exceeded occasionally or intermittently after all practical design approaches to reduce sound pressure levels to below hazardous levels by engineering principles have been explored. Limit C shall be chosen in lieu of Limit B when the procuring activity specifies the hearing protection devices or communications headsets that will be used to maintain mission readiness. For Limit C, the noise attenuation of helmets, headsets, and other hearing protection devices shall be taken into account when determining noise at the ear. Applicable hearing protection devices shall be specified by the procuring activity.

4.2.3.2 Maximum sound pressure level. Personnel shall not be exposed to steady-state sound pressure levels that exceed 130 dBA after hearing protection has been applied.

4.2.3.3 Whole body exposure. Personnel shall not be exposed to steady-state sound pressure levels exceeding 150 dB overall sound pressure level, regardless of hearing protection worn.

4.3 Speech communication. Sound pressure levels at the listener's positions shall not degrade speech communication performance to less than 80 percent correct, adjusted for guessing, as measured using the modified rhyme test (MRT) in accordance with ANSI/ASA S3.2 with talkers and listeners in representative ambient noise environments as specified by the procuring activity. The specified representative ambient noise environments should represent the worst nominal case where communications are required. This requirement shall apply to all communication environments, including face-to-face, public address-loudspeaker, and/or with communication headsets as specified by the procuring activity.

4.3.1 Predictors of speech intelligibility. Predictive measures of speech intelligibility including the Articulation Index (AI), Speech Transmission Index (STI), and Speech Intelligibility Index (SII) may, at the discretion of the procuring activity, be used to predict communication performance for some environments. Predictors of intelligibility scores are shown in Table I. Also shown are the methods used to compute the values in Table I. The equations are not meant to show or demonstrate an equivalence, but a method of comparing the scores of the three referenced predictors of intelligibility. A "raised" voice level (per ANSI/ASA S3.5) shall be assumed for input. The closest possible distance between talker and listener should be assumed to be 30 cm (12 in) from mouth to ear. The predicted speech intelligibility

Source: https://assist.dla.mil -- Downloaded: 2016-10-21T10:43Z
Check the source to verify that this is the current version before use.

for the worst nominal case shall be at least equivalent to the 85 percent MRT level. If this 85 percent requirement is not met, then the MRT shall be used to demonstrate compliance with 4.3.

TABLE I. Speech intelligibility for voice communications systems.

Speech Intelligibility	**Predictors of Intelligibility**		
MRT	AI[1]	STI[2]	SII[3]
95%	0.59	0.57	0.66
90%	0.50	0.48	0.56
85%	0.42	0.41	0.49
80%	0.35	0.36	0.42
75%	0.30	0.32	0.37
70%	0.27	0.29	0.34
65%	0.24	0.27	0.31
60%	0.22	0.25	0.29
55%	0.21	0.24	0.28
50%	0.20	0.24	0.27

Notes:

[1] Articulation Index = $2.35(MRT)^3 - 2.91(MRT)^2 + 1.27(MRT)$ (after Webster & Allen, Speech Intelligibility in Naval Aircraft Radios, 1972)

[2] Speech Transmission Index = $10^{[-0.77(AI)^2 + 1.56(AI) + 0.1 - 1]}$ (after IEC 60849-2)

[3] Speech Intelligibility Index = 0.9915(AI) + 0.0721 (from Bradley, The Acoustical Design of Conventional Open Plan Offices, Canadian Acoustics, v. 31, no. 2, June 2003, pp. 23-31)

[4] Caution should be exercised when attempting to predict speech intelligibility for high noise levels and/or communication systems with non-linearities such as peak-clipping, automatic gain control, or parametric voice coding.

[5] Care should be exercised when setting the speech level(s) for the predictors of intelligibility. They are very sensitive to input level and small changes can dramatically alter the output.

[6] The correlation or accuracy of predictors of speech intelligibility and directly measured MRT speech intelligibility scores is good for linear commercial grade systems and is variable (sometimes poor) with typical military communications systems in military noise environments.

4.3.2 Frequency range. Communication requirements shall be based on the one-third octave band center frequency range of 160 Hz to 5,000 Hz.

4.3.3 Modified rhyme testing. Speech intelligibility performance measurements shall be in accordance with ANSI/ASA S3.2. Each configuration, condition, location, direction, and transmission path shall be considered separately. At the discretion of the procuring activity, similarity among ambient noise and transmission path characteristics can be established to

Source: https://assist.dla.mil -- Downloaded: 2016-10-21T10:43Z
Check the source to verify that this is the current version before use.

reduce test configurations. Speech intelligibility performance of the essential transmission path shall be measured using the MRT.

4.3.3.1 Scoring. The MRT is a six-alternative forced-choice test which should be corrected for guessing. The guessing correction for a 50-word MRT list is:

$$\text{MRT \% correct} = (2.4 * \text{number correct}) - 20$$

This correction shall be applied to all MRT data.

4.3.3.2 Testing procedure. Unless specified by the procuring activity, each defined channel and transmission path shall be measured and scored. Scores obtained from different locations may only be averaged if the difference in sound pressure level (SPL) between locations is less than 2 dB in every octave band from 125 to 4,000 Hz.

4.3.3.3 Noise environment. Noise environments used for testing should represent the worst case(s) in which communication is required over the specified channel. Case(s) shall be chosen based on analytical predictions or measurements using objective metrics.

4.3.3.4 Emulated noise environments for speech intelligibility. The MRT may be conducted in emulated noise environments if the SPL in each octave band from 125 to 4,000 Hz can be reproduced within 3 dB in any octave band and 1 dB on the overall level of the noise environment. All communications hardware used to convey speech between the talker's mouth and listener's ear shall be used, as shown in ANSI/ASA S3.2. Radio frequency signals between transmitting and receiving antennae shall be attenuated as representative of actual distances. Recordings of word lists transmitted through the actual hardware may be used if audio at the listener's ear can be validated against in-situ measurements. Simulated hardware should not be used unless all audio characteristics (e.g., bandwidth, frequency response, harmonic and intermodulation distortion) have been validated against actual hardware.

4.4 Pulsating equipment. Pulsating equipment (e.g., jack hammers, air tools, impact wrenches, machine guns) which may be operated for periods of time in excess of one second with levels equal to or greater than 85 dBA and less than 140 dBP shall comply with the steady-state noise requirements. Where levels equal or exceed 140 dBP, pulsating equipment shall comply with both steady-state and impulsive noise requirements.

4.5. Reporting by Government agencies. Data reports prepared by Government agencies shall contain all appropriate data required in the applicable data item descriptions, and demonstrate (through words, diagrams, or photographs) that all requirements have been met with regard to data collection.

4.6 Systems, equipment, and facilities.

4.6.1 Steady-state noise.

4.6.1.1 Stationary operation tests. Equipment shall be tested in its exact operating

Source: https://assist.dla.mil -- Downloaded: 2016-10-21T10:43Z
Check the source to verify that this is the current version before use.

location if the location is known and such testing is feasible. When this is not possible, the test site shall be a uniformly flat grass surface, free of ice, snow, or vegetation over 15 centimeters (cm) (6.0 inches (in)) tall; it shall be free of reflecting surfaces such as objects, buildings, trees, or hillsides within 30 meters (m) (100 feet (ft)) of the test item and sound measuring equipment. An anechoic or hemi-anechoic chamber meeting ISO 26101 qualification criteria may be substituted for outdoor measurements. For test items permanently mounted, the item shall be tested on-site, and the conditions shall be stated in the test report.

4.6.1.2 Non-stationary operation tests (ground vehicles). These tests shall be conducted on a smooth, straight, paved road that is level (<1 percent grade) and free of all loose gravel or other foreign matter; at least 60 m (200 ft) in length; and free of all sound-reflecting surfaces for 30 m (100 ft) on each side. The test road shall be long enough to allow the vehicle to accelerate by 8- or 16-kilometers per hour (km/h) (5- or 10-miles per hour (mph)) increments to the maximum speed tolerated by the vehicle, operator, or track in all forward gears and to maintain that speed for at least 30 seconds. For tracked vehicles without rubber pads, a similar course of compacted earth having a cone index in the range of 100 to 150 shall be used unless otherwise specified by the procuring activity. Measurements shall not be made when the road surface is wet, covered with snow or ice, or during precipitation, unless specified by the procuring activity.

4.6.2 Impulsive noise.

4.6.2.1 General. For weapon firing tests, a shooting range to suit the type of weapon and firing, or detonation requirements shall be selected. Measurements shall be made with no reflecting surfaces other than the ground, including personnel, within 30 m (100 ft) of both the test item and the transducers. However, allowance needs to be made for reflecting surfaces that are part of the system or included for safety requirements. In this case, the presence of reflecting surfaces shall be documented. For weapons that must be physically supported, a stand shall be used having minimal reflecting or obstructing surfaces. An unimpeded reflecting path from the noise source(s) to the ground and back to the transducers shall be provided. A minimum of five impulses shall be measured for each condition unless a lower number of samples is negotiated with the procuring activity (e.g., missile defense testing). If the range of peak pressure levels exceeds 5 dB, additional samples shall be obtained until the range of peak pressure levels equals the number of samples taken.

4.6.2.2 Special requirements. For tactical purposes, some weapons may normally be fired from enclosures (e.g., bunkers, rooms, a foxhole, or a compartment in an armored vehicle, air or water craft); or the anticipated firing position may be at a non-standard height (i.e., the prone or kneeling position) (see Table II). In those cases, the weapon shall be tested at the anticipated locations of the crewmembers' heads. In such cases the reflective surfaces that are normally part of the firing environment shall be included in the measurement.

4.6.2.3 Other impulsive noise. For impulsive noise sources not associated with weapon firing, the testing environment shall be representative of the intended environment in which the system will be used. This shall include all reflective surfaces, including personnel, which will be

Source: https://assist.dla.mil -- Downloaded: 2016-10-21T10:43Z
Check the source to verify that this is the current version before use.

present when the system is fielded. Measurements shall be taken at a location most representative of the user's head position, during operation.

4.6.3 Facilities. Facilities constructed or modified to support defense systems and equipment shall be designed to minimize occupational and environmental noise. Equipment required to support such facilities shall be selected and installed in accordance with 4.1.2.

4.7 Instrumentation.

4.7.1 General.

4.7.1.1 Noise floor. The complete data acquisition system shall provide a minimum of 35 dB signal-to-noise ratio. If the minimum noise floor requirement cannot be met, the conventional background-noise corrections (see 4.11.1) shall be used and the conditions shall be stated in the test report.

4.7.1.2 Grounding, shielding, and electrical isolation. Test instrumentation shall ensure that electrically-induced noise does not affect acoustic measurements. It is recommended that test instrumentation be adequately grounded and shielded in accordance with the manufacturer's specifications to preclude the recording of erroneous data resulting from response of the instrumentation to electrical noise, whether caused by the measured system or by other sources in the test environment. Precautionary measures should be taken to prevent erroneous response of the measured system to the operation of acoustical instrumentation. Blasts from explosive materials can generate a large electrostatic charge and significant heat in the vicinity of the blast. Measurement equipment, including transducers, shall be properly grounded in accordance with their specifications and shall be protected from heat to prevent electrostatic charge and thermal effects from confounding the measurement of impulsive levels.

4.7.1.3 Weather conditions. The effect of weather conditions (e.g., temperature, humidity, wind, and barometric pressure) on the performance of all instruments should be considered. Temperature, atmospheric pressure, relative humidity, wind speed, and wind direction shall be recorded for outdoor measurements unless otherwise specified by the procuring activity. Sound pressure transducers shall be chosen to minimize the effects of temperature under the expected test conditions. Output shall be corrected from temperature-versus-sensitivity curves for the individual transducer. Under high-humidity conditions, care shall be taken to minimize condensation within the microphone element (especially for condenser microphones). Instrumentation can be affected by low-temperature conditions and caution should be exercised when testing under low temperature conditions. The measurements shall be made at total wind speeds no greater than 20 kilometers per hour (km/h) (12.5 mph). The crosswind (between the source and each measurement location) component should not be greater than 9.3 km/h (5.8 mph).

4.7.2 Transducer orientation.

Source: https://assist.dla.mil -- Downloaded: 2016-10-21T10:43Z
Check the source to verify that this is the current version before use.

4.7.2.1 Exterior measurements. For exterior measurements, blunt cylinder shaped transducers shall be positioned with the sensing surface facing up if possible. For grazing incidence, pointed or pencil probe transducers shall be oriented to be pointing directly at the source. Transducers shall be oriented with respect to the noise source so that the plane passing through the sensing surface includes the noise source. This orientation is defined as grazing incidence (90°). If more than one source is present, such as from a rocket launcher, transducers shall be oriented so that the plane passing through the sensing surface includes the major suspected source of noise. This technique will tend to minimize the arrival of shock waves at transducer incidence angles between 0° and 90°, which may cause ringing and overshoot. Multiple microphones or pressure gauges may be necessary for complex environments. If using an anechoic or hemi-anechoic chamber as a substitute for outdoor measurements, normal incidence (free-field) microphones can be used.

4.7.2.2 Interior measurements. For interior measurements, such as inside a combat vehicle or other reverberant space where the direction of travel of the major shock wave is uncertain (or where major shock waves are expected to arrive from many directions), transducers shall be positioned away from the nearest reflecting surface. Transducers shall be oriented at grazing incidence to the center of the major suspected source (e.g., the muzzle or an open hatch). Multiple microphones or pressure gauges may be necessary for complex interior environments.

4.7.2.3 Angle of incidence. For purposes of obtaining an accurate measurement of the incoming pressure wave using pressure probes, there should be no reflected or directly received sounds at a non-grazing angle of incidence more than 10° from the true angle of grazing incidence. For purposes of defining risk, head diffraction and reflections affects sound propagation into the ear, and different angles of incidence may be needed to be taken into account in risk analyses. See Figure 2 for additional information.

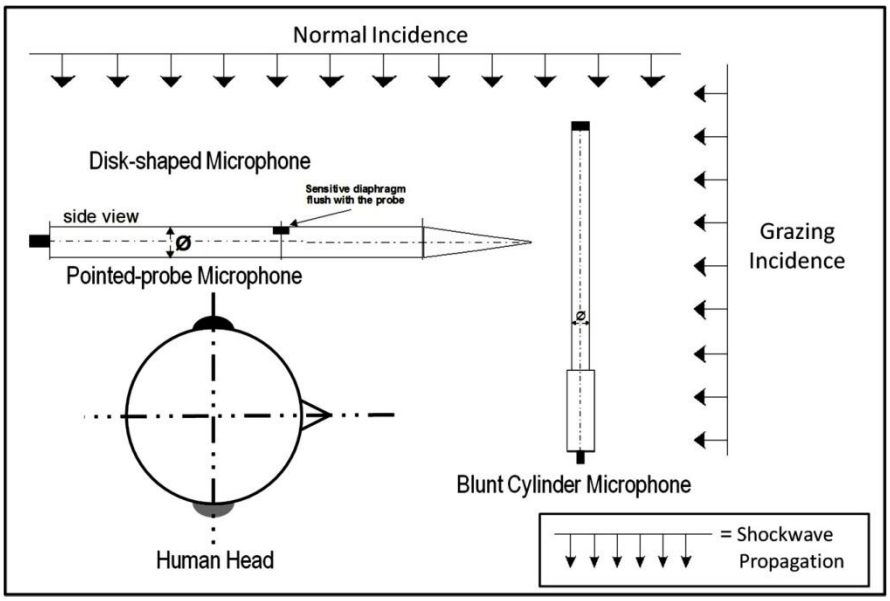

FIGURE 2. Angle of incidence.

Source: https://assist.dla.mil -- Downloaded: 2016-10-21T10:43Z
Check the source to verify that this is the current version before use.

4.7.3 Microphones.

4.7.3.1 Microphone characteristics.

4.7.3.1.1 Steady-state noise. For steady-state noise measurements, pressure microphones should have a calibrated (± 1 dB) response at grazing incidence (90º). Free field microphones having a calibrated response at normal incidence (0°) can be used with the addition of a random-incidence corrector. However, for measurements of stationary test items at distances greater than four times the major dimension of the test item, a free field microphone without a random incidence corrector may be used if it is pointed at the item. The microphones shall have a calibrated frequency response between 20 Hertz (Hz) and 18 kilohertz (kHz).

4.7.3.1.2 Impulsive noise. Microphones shall meet the requirements of ANSI/ASA S1.15, Type I, from 4 Hz to 11.5 kHz. Other transducers for capturing impulsive noise shall have undamped resonance at not less than 100 kHz. Diameters of sensor elements shall be not more than 6.4 millimeters (mm) (0.25 in). Transducer holders should be small and minimize flow interference over the sensor surface. For measurements above 7.0 kiloPascals (kPa) (171 dBP) condenser microphones shall not be used unless specifically stipulated by the supplier to be capable of measuring the desired pressure level. For measurements below 40 kPa (186 dBP), piezoelectric or piezoresistive probes having a blunt cylinder shape may be used. For measurements above 40 kPa (186 dBP) pointed (or pencil) or disc-shaped piezoelectric or piezoresistive probes shall be used. Acceleration sensitivity of the transducer shall be less than 0.014 kiloPascals per unit acceleration (kPa/g) (0.002 pounds per square inch per unit acceleration (psi/g)) in the axial direction, and less than 0.069 kPa/g (0.01 psi/g) in the transverse direction. See Figure 3 for illustration.

4.7.3.2 Locations.

4.7.3.2.1 Far field microphone location. The microphones used for measuring steady-state or impulsive noise at the far field locations, whether for use as reference measurements or noise contour determinations, shall be positioned 1.6 m (63 in) above the ground, at the indicated measurement distance. No obstruction, including the instrument operator, shall be between the equipment being measured and the transducer unless otherwise specified by the procuring activity.

NOTE: The measurement location should be, whenever possible, at a distance of at least four times the major dimension of the source. Any extrapolated sound pressure level shall approximate the inverse square law (6 dB decrease for each doubling of distance). Extrapolations shall only be calculated in a direction away from the source; extrapolations shall not be calculated in a direction toward the source.

Source: https://assist.dla.mil -- Downloaded: 2016-10-21T10:43Z
Check the source to verify that this is the current version before use.

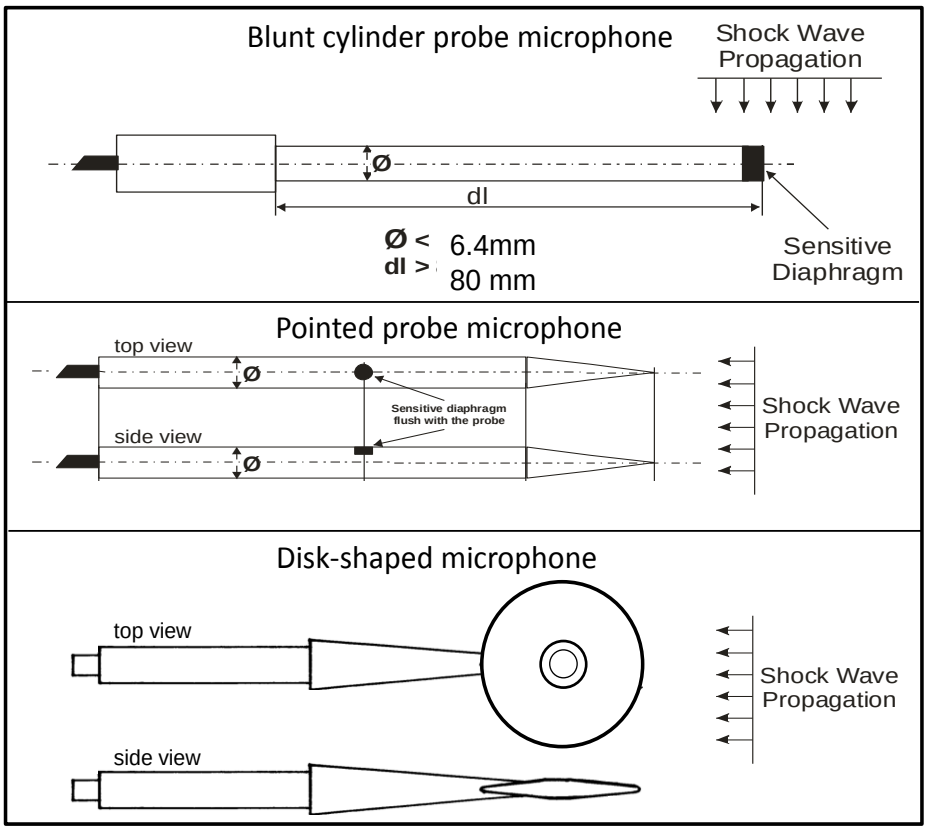

FIGURE 3. Examples of microphone configurations.

4.7.3.2.2 Microphone locations.

4.7.3.2.2.1 Microphone placement. Noise measurements shall be made at the following locations:

a. Each operator or crew position,

b. Representative positions, under worst-case operating conditions, where one or more individuals (e.g., passengers) will be located,

c. Occasionally occupied positions during typical operation or maintenance of the item/system (e.g., the space in and around a generator set, pump, or arc welder), and

d. During testing, the operator(s) shall not occupy that location where the noise is being measured unless required to operate the equipment.

NOTE: Where the operator, crew, or passenger station(s) is not clearly defined or where unattended use of equipment is intended (e.g., some mobile electric power, pumps), the noise measurement position(s) shall be designated by the procuring activity.

Source: https://assist.dla.mil -- Downloaded: 2016-10-21T10:43Z
Check the source to verify that this is the current version before use.

4.7.3.2.2.2 Personnel location. The measurement shall be made at ear level (or anticipated ear level if no operator is present) along the axis through the two ears,15 cm (6.0 in) from the ear subject to the highest exposure (i.e., muzzle or breech), but not closer to the source. Unoccupied locations shall be measured at center head positions. If a wall or other reflective surface, excluding headgear, is closer than 30 cm (12 in) from the operator's ear subject to the highest exposure, the microphone shall be positioned equidistant from the ear and that surface.

4.7.3.2.2.3 Operational heights. Table II shall be used to establish operational heights in the absence of specific requirements.

TABLE II. Ear and microphone height above supporting surface for various operational positions.

Operational Orientation	Height Above Supporting Surface
Prone	33 cm (13.0 in)
Sitting	80 cm (31.5 in)
Kneeling	124 cm (48.8 in)
Standing	160 cm (63.0 in)

NOTE: Supporting surface includes seating or other means of elevating the operator above ground level. In the absence of supporting structures, the ground or floor elevation shall be used as the reference height.

4.7.3.2.3 Microphone position tolerance. For measurement distances less than 2 m (6.5 ft), the microphone position should be kept within 2 cm (0.8 in) of the nominal distance. For measurement distances equal to or greater than 2 m (6.5 ft), the microphone position should be kept within 5 percent of the nominal distance.

4.7.3.3 Microphone protection.

4.7.3.3.1 Flash, shock, and thermal effects. Microphones should be protected from flash, shock, and thermal effects in such a manner so as to not modify the sensitivity or frequency response of the microphones. All connectors should be electrically isolated from the stand and other grounded objects to prevent multiple ground paths. Cables should be protected from shock waves by taping them to the stand in a location that minimizes exposure to shock waves. Cables should preferably be run radially away from the transducer to the data collection equipment, and in no case should any non-radial portion of the cable be closer than 10 m (33 ft) to the source than the transducer to prevent shock-generated electrical transients from contaminating the measurement.

Source: https://assist.dla.mil -- Downloaded: 2016-10-21T10:43Z
Check the source to verify that this is the current version before use.

4.7.3.3.2 Microphone windscreen use. A microphone exposed to wind or to any operational air flow with velocity exceeding 5.6 km/h (3.5 mph) shall be equipped with a windscreen. When a microphone windscreen is used it shall provide less than 1 dB overall sound attenuation under zero wind speed for the noise source being measured. When noise measurements are made in octave bands, the 1 dB maximum sound attenuation applies to any octave band specified for measurement. If windscreen sound attenuation exceeds 1 dB in a specific frequency band, a correction factor to account for the change in the measured sound spectrum shall be applied to this band. Due to potential nonlinear behavior of windscreens at high sound intensity levels no windscreen shall be used for sound pressure levels exceeding 100 dB SPL when the sounds to be recorded are 20 dB or more above the "self noise" created by wind over the microphone.

4.7.4 Sound level meters.

4.7.4.1 General. Sound level meters shall conform to the requirements for Type 1 sound level meters as specified by ANSI/ASA S1.4 unless otherwise specified by the procuring activity. Octave and fractional band-pass filter settings shall conform to the requirements for Order 3, Type 3-D, extended range filter sets, as specified by ANSI/ASA S1.11. The microphone should be mounted on a rigid frame or stand and connected to the sound level meter by a cable at least 2 m (6.5 ft) long. If the microphone must be attached directly to a hand-held sound level meter, the microphone orientation shall still be the same as that appropriate to the microphone on a cable.

4.7.4.2 Octave band sound pressure level measurement ranges. Unless otherwise specified by the procuring activity, unweighted octave band sound pressure level measurements shall be made for at least the octave bands with band-centers from 31.5 to 8,000 Hz.

4.7.4.3 Peak sound pressure level measurements. The peak sound pressure level measurements shall be made using either a peak reading sound level meter or a combination of instruments with equivalent characteristics, such as a sound level meter and an impact meter, or a sound level meter and a calibrated oscilloscope or other appropriate calibrated display instrumentation. The measurements shall be made with a sound level meter capable of making peak sound pressure level measurements with the total rise time of the instrumentation not exceeding 200 microseconds (µs). The rise time of the peak detector shall be such that a single pulse of 200 µs duration produces a meter indication within 2 dB of the indication produced by a pulse having a duration of 10 µs and equal peak amplitude. The amplitude of the 10 µs reference pulse shall be such as to produce a meter deflection 1 dB below full scale.

4.7.4.4 A- and C-weighted sound pressure level measurements. A sound level meter, meeting the requirements of an ANSI/ASA S1.4, Type 1 instrument, shall be set on either A-weighting or C-weighting as appropriate with slow meter response, and then used to record the average or L_{eq} at each location.

Source: https://assist.dla.mil -- Downloaded: 2016-10-21T10:43Z
Check the source to verify that this is the current version before use.

4.7.5 Recording equipment.

4.7.5.1 Recording equipment for steady-state noise. Equipment for capturing and storing steady-state noise shall have a minimum of 16-bit resolution, with 24-bit resolution preferred, and a sampling rate of a minimum of 48,000 samples per second. The anti-aliasing filter roll-off rate shall be not less than 36 dB/octave.

4.7.5.2 Recording equipment for impulsive noise. Equipment for capturing and storing impulsive noise shall have a minimum of 16-bit resolution, with 24-bit resolution preferred, and a sampling rate of a minimum of 192,000 samples per second. The analog signal shall be filtered, using a Bessel type with a 40-kHz cutoff frequency. The roll-off rate shall be not less than 36 dB/octave.

4.7.5.3 Instrumentation specifications. Noise recording instrumentation or combinations of instrumentation other than sound level meters and band filter sets shall conform to SAE J184, applicable provisions of ANSI/ASA S1.4 dealing with Type 1 instruments, ANSI/ASA S1.6, and ANSI/ASA S1.11 unless otherwise specified by the procuring activity.

4.7.6 Octave band filter sets. Full and one-third octave band filter sets shall conform to the requirements for ANSI/ASA S1.11, Order 3, Type 3-D, Extended Range.

4.8 Calibration.

4.8.1 Laboratory calibration. A laboratory calibration shall be made of all sound measuring instrument components within 12 months prior to each use, as well as after exposure to mechanical shock or other unusual disturbing conditions. Calibration instrumentation, including the sound level calibrator used for field calibration (see 4.8.2.2), shall have a calibration within the 12 months prior to each use traceable to the National Institute for Standards and Technology.

4.8.2 Field calibration.

4.8.2.1 Sound measuring system. A field calibration of each complete sound measuring system including, but not limited to, microphone or simulated microphone, preamplifier, amplifiers, meters, and data recorders shall be made to verify that the pressure signals are valid. A field calibrator, conforming to ANSI/ASA S1.40, of known frequency and level, shall be placed on each microphone and the channel shall be recorded for at least 30 seconds. Field calibration shall be performed immediately before and after each measurement session of the day and whenever any component of the measuring system is changed during field use. This field calibration shall compare the stated sensitivity of the microphone, adjusted for cable and system response, with the recorded level. The precision of a field calibration shall be within ± 12 percent. For example, at 175 dBP (approximately 11.25 kPa), a 12 percent change equals 1.1 dBP, or 1.35 kPa.

4.8.2.2 Microphone calibration. Calibration of microphones shall be performed by one of the methods specified in ANSI/ASA S1.15 or as specified by the instrument manufacturer.

Source: https://assist.dla.mil -- Downloaded: 2016-10-21T10:43Z
Check the source to verify that this is the current version before use.

4.9 Data.

4.9.1 Metrics.

4.9.1.1 Overall sound pressure level.

4.9.1.1.1 Unweighted SPL. Overall unweighted sound pressure levels shall be determined at any location where active noise reduction devices may be used.

4.9.1.1.2 A-weighted SPL. A-weighted sound pressure levels (L_A) shall be determined at all locations.

4.9.1.1.3 C-weighted SPL. C-weighted sound pressure levels (L_C) shall be determined at all locations. C-weighted levels are needed to estimate noise at the ear with hearing protection in accordance with ANSI/ASA S12.68.

4.9.1.2 Peak SPL. Peak unweighted sound pressure levels (dBP) shall be determined for any impulsive noise source.

4.9.1.3 Octave band SPL.

4.9.1.3.1 Full octave SPL. For any measurements made where hearing protection or communications headsets are worn, unweighted octave band SPLs shall be determined.

4.9.1.3.2 One-third octave SPL. Unweighted one-third octave band SPLs shall be determined for any location in which speech intelligibility is to be evaluated, and for any location where the noise has tonal components.

4.9.2 Repeatability. Suitable operating parameters shall be recorded that allow repeatable noise measurements to be made. Recording of operating parameters (e.g., speed, power, weather conditions) shall be made at least once per second, and time stamped so the timing may be referenced to these readings. The following shall also be recorded for each measurement:

a. The measurement coordinates, stated numerically, and illustrated on an inboard profile or plan view of the system.

b. Whether the measurement location was occupied during measurement.

c. Where a crewmember has freedom of movement, mission area maximum, minimum, and average sound pressure levels.

d. Where time variations in sound pressure level may be significant, noise data obtained for a period of time sufficient to define minimum and maximum levels.

e. System description, system gain, and system calibration.

Source: https://assist.dla.mil -- Downloaded: 2016-10-21T10:43Z
Check the source to verify that this is the current version before use.

4.9.3 Correction factors. The application of correction factors to the raw data time waveform files shall be recorded and saved with the noise data files. The correction factors include, but are not limited to, system gain corrections, system frequency response corrections, microphone/transducer directivity corrections, and weather corrections (to a standard acoustic day of 59° F and 70% relative humidity).

4.9.4 Scaling. Contribution of noise sources which do not change with condition, e.g., fans, shall not be scaled.

4.9.5 Acoustic reference level. If data are stored in a WAV file, the SPL level corresponding to 0 decibels full scale shall be recorded in the file name or in a separate readme file.

4.10 Ground equipment system under test (SUT).

4.10.1 SUT conditions. All safety subsystems that belong to the SUT such as guards, mufflers, and warning devices as well as all noise-producing auxiliary equipment normally used with the SUT shall be installed.

4.10.2 Ground vehicle speed and gear. Vehicle noise shall be measured at two-thirds of rated engine speed (not maximum governed speed) or two-thirds of the vehicle speed posted in the vehicle, in the highest gear or in the drive mode if the transmission is automatic, or as specified by the procuring activity (for compliance). The vehicle shall have engine speed or vehicle speed measured by a calibrated tachometer or speedometer, as appropriate.

4.10.3 Load conditions. The load-carrying SUTs (e.g., trucks, trailers, forklifts) shall be loaded with two-thirds of their usual rated payloads or as specified by the procuring activity (for compliance). Auxiliary-trailered equipment shall not be towed during the test. Vehicles shall also be tested at the maximum payload including towed trailers at maximum payload if such test conditions are applicable to the vehicle design. Tire pressure or track tension shall be adjusted to that prescribed for the load.

4.10.4 System operations. Systems shall be operated as required to accomplish their intended missions or functions. All subsystems and auxiliary equipment normally in use shall be operated.

4.10.5 New equipment. Where applicable, tests shall be made on new equipment after the officially prescribed break-in time or mileage, and after performance requirements have been met.

4.10.6 Speed. All equipment shall be operated at maximum-rated continuous duty speed or as specified by the procuring activity.

4.10.7 Auxiliary equipment. All auxiliary equipment normally in continuous use while the vehicle is in motion shall be operated. Where both heaters and air conditioners are present,

Source: https://assist.dla.mil -- Downloaded: 2016-10-21T10:43Z
Check the source to verify that this is the current version before use.

both configurations shall be tested. If under some operational conditions heaters and air conditioners may be used at the same time (such as for humidity control) both shall be operated simultaneously.

4.10.8 Equipment openings. All windows, vents, and access openings shall be in the normal operation positions as defined by the procuring activity.

4.10.9 Construction and materials-handling equipment. The duty cycle, speed, load, and test surface shall be specified by the procuring activity. If commercial test standards that do not include load are used, reports shall specifically stipulate the loading conditions used.

4.11 Testing.

4.11.1 Test conditions. Ambient noise level for steady-state noise tests shall always be at least 5 dB below the acceptance criterion, and should be at least 15 dB below the noise being measured, in each frequency band of interest. Measured levels 5 to 15 dB greater than ambient shall be corrected using Table III. Ambient noise levels for impulsive-noise tests shall be at least 40 dB below the peak pressure level being measured for acceptance, and at least 20 dB below the peak pressure level for noise contours.

TABLE III. Ambient noise corrections.

Difference (dB) Between Measured Sound Pressure Level and Ambient Alone	**Correction (dB) to be Subtracted From Measured Sound Pressure Level to Estimate Level of Source Alone**
5	1.2
6	1.0
7	0.8
8	0.6
9	0.5
10	0.4
11	0.3
12	0.3
13	0.2
14	0.2
15	0.1

4.11.2 Test schedule. During development, sound pressure level measurements shall be made, as a minimum, when the test item is first undergoing testing. Additional measurements shall be made as alterations affecting noise are applied during further development.

Source: https://assist.dla.mil -- Downloaded: 2016-10-21T10:43Z
Check the source to verify that this is the current version before use.

Measurement of the final system configuration shall be made as early as possible before first article acceptance.

4.11.3 Testing cycles. If typical testing cycles are specified by the procuring activity, the L_{Aeq} for each testing cycle shall be determined. Testing cycles shall be as short as practical and the noise exposure of sufficient testing cycles shall be measured for a minimum duration of 1 hour at rated capacity. Sufficient testing cycles shall have been measured if the L_{Aeq} does not change by more than +/- as many dBA than the number of testing cycles measured (i.e., if four testing cycles have been measured, the L_{Aeq} does not change by more than 4 dBA), or if the measurement time reaches 8 hours. The equipment shall be operated at a test site typical of the environment in which the equipment is to be used, as specified by the procuring activity.

4.11.4 Sample size. Materiel acceptance shall be based on the number of test items determined by the procuring activity.

5. DETAILED REQUIREMENTS

5.1 Individual appendixes. Individual appendixes following Section 6 describe additional specific requirements to be met in addition to the noise measurement requirements described herein. Detailed requirements specified herein shall be followed unless superseded in the individual appendixes.

5.2 Hearing conservation. All personnel exposed to hazardous steady-state or impulsive noise levels shall wear hearing protection as required by DODI 6055.12. When noise is being measured in personnel-occupied enclosures, no test personnel or observers shall be present within the enclosure unless required to operate or adjust the test equipment, or to record data. Personnel who will be occupationally exposed to an 8-hour time-weighted average or equivalent sound pressure level (L_{Aeq}) of 85 dBA or greater, or peak-pressure levels of impulsive noise at or above 140 dBP, shall also be entered in a hearing-conservation program as outlined in DODI 6055.12.

6. NOTES

(This section contains information of a general or explanatory nature which may be helpful, but is not mandatory.)

6.1 Intended use. This standard is intended for use as a design standard for military materiel, cited contractually in system specifications, and elsewhere, and for use as a basis for that part of noise testing where design characteristics are assessed for purposes of acceptance. It is not intended for use to express binding requirements in conceptual and other early acquisition phases. The standard may be applied to traditional as well as non-developmental item acquisitions.

Source: https://assist.dla.mil -- Downloaded: 2016-10-21T10:43Z
Check the source to verify that this is the current version before use.

6.2 Acquisition requirements. Acquisition documents should specify the following:

a. Title, number, and date of this standard.

b. The steady-state noise design limit (see 4.2.3.1).

c. The applicable hearing protection devices, communications headsets, or combinations thereof to be used in achieving the steady-state noise design limit (see 4.2.3.1).

d. The representative ambient noise environment for modified rhyme testing (see 4.3).

e. The communications headsets to be used as part of speech communications evaluations (see 4.3).

f. When predictors of speech intelligibility may be used (see 4.3.1).

g. Whether similarity can be used to reduce the number of test configurations (see 4.3.3).

h. The channel and transmission path to be measured and scored if different from that specified in 4.3.3.2.

i. The cone index if different from that specified in 4.6.1.2.

j. The road surface conditions if different from that specified in 4.6.1.2.

k. The number of test samples if different from that specified in 4.6.2.1.

l. The weather conditions to be recorded if different from that specified in 4.7.1.3.

m. Any obstructions that are allowed to be between the equipment being measured and the transducer (see 4.7.3.2.1).

n. The noise measurement location if different from that specified in 4.7.3.2.2.1.

o. Sound level meters if different from that specified in 4.7.4.1.

p. Unweighted octave band sound pressure level measurements if different from that specified in 4.7.4.2.

q. Noise recording instrumentation if different from that specified in 4.7.5.3.

r. The vehicle speed and gear if different from that specified in 4.10.2.

s. The SUT payload if different from that specified in 4.10.3.

t. The vehicle duty speed if different from that specified in 4.10.6.

u. The normal operation position for all windows, vents, and access openings (see 4.10.8).

v. The duty cycle speed, load, and test surface for construction and materials-handling equipment (see 4.10.9).

w. Typical testing cycles (see 4.11.3).

x. The test site to be used if different from that specified in 4.11.3.

y. The number of test items in the sample size (see 4.11.4).

6.3 Associated data item descriptions (DIDs). This standard has been assigned an Acquisition Management Systems Control (AMSC) number authorizing it as the source document for the following DIDs. When it is necessary to obtain the data, the applicable DID

Source: https://assist.dla.mil -- Downloaded: 2016-10-21T10:43Z
Check the source to verify that this is the current version before use.

must be listed on the Contract Data Requirements List (DD Form 1423).

DID Number	DID Title
DI-HFAC-80270	Machinery and Equipment Airborne Sound Measurements Test Plan
DI-HFAC-80271	Sound Test Failure Notification and Recommendations Report
DI-HFAC-80272	Machinery and Equipment Pre-Installation Airborne Sound Measurements Test Report
DI-HFAC-80273	Equipment Structureborne Vibratory Acceleration Measurement Plan
DI-HFAC-80274	Machinery and Equipment Pre-Installation Structureborne Sound Measurements Test Report
DI-HFAC-81202	Noise Control Program Plan
DI-HFAC-81278	Airborne Noise Analysis and Control Design History Booklet
DI-HFAC-81975	Noise Measurement Report
DI-HFAC-81977	Ship Noise Surveys
DI-HFAC-81981	Air Moving Device Pre-Installation Airborne Sound Testing and Acceptance Criteria Report

The above DIDs were current as of the date of this requirement. The ASSIST database should be researched at https://quicksearch.dla.mil to ensure that only the current and approved DID is cited on the DD Form 1423.

6.4 Subject term (key word) listing.

Acoustics
Airborne equipment
Attenuating helmet or headsets
Aural non-detectability
Hazards
Hearing conservation criteria
Hearing damage risk criteria
Hearing protectors
Impulsive noise
Instrumentation
Peak pressure level
Personnel-occupied areas

Source: https://assist.dla.mil -- Downloaded: 2016-10-21T10:43Z
Check the source to verify that this is the current version before use.

Shipboard equipment
Speech interference level
Steady-state noise
Testing
Vehicles

6.5 Changes from previous issue.

6.5.1 Marginal notations. Marginal notations are not used in this revision to identify changes with respect to the previous issue due to the extent of the changes.

6.5.2 Community annoyance. Community annoyance requirements were deleted from this standard because community annoyance regulations differ by community, state, and country. These requirements are regulated by codes enforced in the country or locality of use. Nothing stated in MIL-STD-1474 enhances enforcement or otherwise alters existing or future laws and regulations.

6.6 Guidance documents.

Air Force Occupational Safety and Health Standards

AFOSH STD 48-19	Hazardous Noise Program
AFOSH STD 48-20	Occupational Noise and Hearing Conservation Program

Department of the Army Pamphlets

DA PAM 40-501	Hearing Conservation

Chief of Naval Operations Instructions

OPNAVINST 5100.23	Navy Occupational Safety and Health Program Manual
OPNAVINST 9640.1	Shipboard Habitability Program

Source: https://assist.dla.mil -- Downloaded: 2016-10-21T10:43Z
Check the source to verify that this is the current version before use.

This page intentionally left blank.

Source: https://assist.dla.mil -- Downloaded: 2016-10-21T10:43Z
Check the source to verify that this is the current version before use.

APPENDIX A

STEADY-STATE NOISE REQUIREMENTS FOR PERSONNEL-OCCUPIED AREAS

TABLE OF CONTENTS

PARAGRAPH PAGE

A.1 Scope, applicability, and purpose 31
A.1.1 Scope 31
A.1.2 Applicability 31
A.1.3 Purpose 31

A.2 Documents applicable to Appendix A 31

A.3 Definitions 31

A.4 General requirements 31
A.4.1 Compliance with main body of standard 31
A.4.2 Subcontractors and suppliers 31
A.4.3 Posting of noise hazard areas 31
A.4.4 Manuals 31

A.5 Detailed requirements 32
A.5.1 Noise limits for communications 32
A.5.1.1 Categories 32
A.5.1.2 Category selection 33
A.5.1.3 Acceptance 33
A.5.2 Test requirements 33
A.5.2.1 General 33
A.5.2.2 Measurements 34

A.6 Notes 34
A.6.1 Intended use 34
A.6.2 Details specified by the procuring activity 34
A.6.3 Information to the development test agency 34

Source: https://assist.dla.mil -- Downloaded: 2016-10-21T10:43Z
Check the source to verify that this is the current version before use.

This page intentionally left blank.

Source: https://assist.dla.mil -- Downloaded: 2016-10-21T10:43Z
Check the source to verify that this is the current version before use.

A.1. Scope, applicability, and purpose.

A.1.1 Scope. This Appendix establishes acoustical noise limits and prescribes testing requirements and measurement techniques for determining conformance to steady-state noise limits in personnel-occupied areas.

A.1.2 Applicability. This Appendix applies to the acquisition and product improvement of all designed or purchased (non-developmental items) military systems except aircraft, which are covered under Appendix D, and ships, which are covered under Appendixes E and F. This Appendix is intended to address noise levels emitted during the full range of typical operational conditions of all materiel, whether the item is fixed in place (e.g., a permanently installed generator) or moves (e.g., a vehicle).

A.1.3 Purpose. This Appendix provides criteria for designing materiel having noise levels that minimize noise induced hearing loss, permit intelligible speech communication in noisy environments, and improve the overall performance of warfighters.

A.2. Documents applicable to Appendix A.

MIL-STD-1472	Human Engineering
MIL-HDBK-1908	Definitions of Human Factors Terms
ANSI/ASA S1.1	Acoustical Terminology
SAE J184	Qualifying a Sound Data Acquisition System

(The above documents are those cited in this Appendix. For applicability and ordering information, see preambles and addresses in Section 2 of the main body of the standard.)

A.3. Definitions. Unless defined below, terms are defined per MIL-HDBK-1908. Terms not appearing in MIL-HDBK-1908, are defined per ANSI/ASA S1.1.

A.4. General requirements.

A.4.1 Compliance with main body of standard. Compliance with the provisions of this Appendix shall be in addition to compliance with the applicable provisions of the main body of the standard and, in the case of conflict, shall supersede the requirements of the main body.

A.4.2 Subcontractors and suppliers. The prime contractor is responsible for total system conformance of products from subcontractors and suppliers to relevant noise limit requirements herein. The prime contractor should ensure all relevant noise limit requirements and design criteria are provided to subcontractors and suppliers as part of their technical and management process.

A.4.3 Posting of noise hazard areas. See 4.2.2.

A.4.4 Manuals. Where steady-state noise is 85 dBA or greater at personnel-occupied

Source: https://assist.dla.mil -- Downloaded: 2016-10-21T10:43Z
Check the source to verify that this is the current version before use.

areas (e.g., operator, maintenance, observer, and other occupied positions), operation and maintenance manuals (e.g., field and technical manuals) shall contain appropriate discussion of noise hazards. Discussion shall include the requirement for hearing protection, the type of hearing protection recommended, the noise level of the equipment at various locations, and the distance at which the 85 dBA limit will be met.

A.5. Detailed requirements.

A.5.1 Noise limits for communications.

A.5.1.1 Categories. Table A-I shall be used in selecting a noise limit category for communications. This limit shall be in addition to noise design limits for minimizing hearing loss (see 4.2.3.1). Categories D, E, and F are only compatible with Limit A in 4.2.3.1. If the total system configuration is unknown, the allowable noise limit for any single item shall be 3 dB below the limit of the applicable system category.

TABLE A-I. Steady-state noise categories and noise limits (dBA) for personnel-occupied areas.

Category[1]	**A-Weighted Limit**[2] **(dBA)**	**Communications Requirements**
A	SPL ≥ 100	No direct person-to-person voice communication required.
B[3]	SPL < 100	Electrically-aided communication via attenuating helmet or headset required.
C	SPL < 90	No frequent direct person-to-person voice communication required. Occasional shouted communication may be possible at a distance of 30 cm (12 in).
D	SPL < 85	No frequent direct person-to-person voice communication required. Occasional shouted communication may be possible at a distance of 60 cm (24 in).
E	SPL < 75	Occasional telephone or radio use or occasional communication at distances up to 1.50 m (5.0 ft) required. (Equivalent to NC-70).
F	SPL < 65	Frequent telephone or radio use or frequent communication at distances up to 1.50 m (5.0 ft) required. (Equivalent to NC-60).

[1]Categories A, B, C, and D are based primarily on hearing conservation priorities; the remaining categories are based primarily on communication requirements. For fixed-plant facilities, see MIL-STD-1472.

[2]Sound pressure levels at or above 85 dBA are hazardous; hearing protection is required.

[3]The noise attenuation properties of communications devices, tactical communications and protective systems, and hearing protection devices should be considered when selecting headsets.

Source: https://assist.dla.mil -- Downloaded: 2016-10-21T10:43Z
Check the source to verify that this is the current version before use.

A.5.1.2 Category selection. For systems requiring unaided communication (i.e., normal voice communications without shouting), Category E or F shall be selected on the basis of Table A-I. All other systems shall not exceed Category C unless communication headsets are required. Where the limit of Category D can be documented as being technically infeasible, another noise limit shall be selected by the procuring activity.

A.5.1.3 Acceptance.

A.5.1.3.1 Compliance. Compliance with the required noise limit shall be documented based upon test requirements of A.5.2 and the measurements of A.5.2.2.

A.5.1.3.2 Non-compliance. Non-compliance with the required noise limit shall be documented based upon test requirements of A.5.2 and the measurements of A.5.2.2; additionally, the following shall apply:

a. The required maximum noise limit(s) may be established to be technically infeasible based upon testing and analysis consistent with best engineering practice. Such testing and the resulting analysis shall be conducted and reported by a professionally qualified acoustical consultant or U.S. Government laboratory.

b. Documentation shall contain technically supported design considerations, technically supported design recommendations for noise reduction, and technically supported predictions of the resulting noise levels.

c. Noise reduction feasibility documentation shall also include the following:

(1) Identification of all noise sources that contribute to the noise level at the locations of interest.

(2) Identification of all noise paths between the noise sources and the locations of interest.

(3) Rank ordering of the source/path combinations in terms of their contribution to the overall noise level at the locations of interest.

(4) Development of noise control measures for each source/path combination in order of dominance until the required noise levels at the locations of interest are attained.

(5) Clearly stated and technically supported trade-off analyses of noise control benefit against other design and performance requirements, including cost and scheduling implications, consistent with best engineering practice.

A.5.2 Test requirements.

A.5.2.1 General.

A.5.2.1.1 Acceptance criteria. Noise at locations designated by 4.7.3.2.2, for noise contours and measurements designated by A.5.2.1.2 and A.5.2.2 shall meet the specified limit.

Source: https://assist.dla.mil -- Downloaded: 2016-10-21T10:43Z
Check the source to verify that this is the current version before use.

A.5.2.1.2 Noise contours. Where the steady-state noise level of noise generating equipment is 85 dBA or greater, the distances and directions from the noise source at which the sound pressure level equals 85 dBA shall be determined. Equipment to be operated indoors (e.g., a hangar) shall be measured in the most reverberant space expected. The 85 dBA contours shall also be determined for mobile equipment and vehicles at such times when they are stationary. The 85 dBA contour shall be determined from measurements made at occupiable positions around the noise source at angular increments not greater than 30°, and at the noisiest angle. Non-occupiable positions include those precluded for safety reasons. Previously demonstrated symmetry of noise radiation from the source may be used to minimize measurement directions. For aircraft and shipboard noise, see Appendixes D, E, and F.

A.5.2.2 Measurements.

A.5.2.2.1 Data collection. Where noise exposure is measured for a repeated cycle, measurements shall be made with an integrating sound level meter or other recording instruments that measure L_{Aeq} for the duration of the repeated cycle.

A.5.2.2.2 Test personnel. Noise measurements shall be made with the minimum number of people in the area, including test personnel.

A.6. Notes.

A.6.1 Intended use. This Appendix is intended for use as a steady-state noise criteria design standard for military ground materiel, cited contractually in system specifications, and elsewhere, and for use as a basis for that part of noise testing where design characteristics are assessed for purposes of acceptance. It is not intended for use to express binding requirements in conceptual and other early acquisition phases, though many of the design criteria would be of benefit in identifying potential problem areas as the design evolves. The Appendix may be applied to developmental, as well as non-developmental item (NDI) acquisitions. This Appendix is not intended for applicability to aircraft or shipboard noise which are specified by Appendixes D, E, and F, as applicable.

A.6.2 Details specified by the procuring activity. Acquisition documents should specify the following:

a. When selection of another noise limit is to be made due to technical infeasibility of meeting the Category D limit (see A.5.1.2).

b. When it is known that certain types of hearing protection will interfere with the use of helmets or other equipment.

A.6.3 Information to the development test agency. Developing agencies should make appropriate information available to the development test agency, as required, to ensure that test conditions, noise category selection, and evaluation of results are consistent with system requirements, specified hearing protection requirements, if any, and general procuring activity-specified requirements relevant to the provisions of this Appendix.

Source: https://assist.dla.mil -- Downloaded: 2016-10-21T10:43Z
Check the source to verify that this is the current version before use.

APPENDIX B

IMPULSIVE NOISE REQUIREMENTS FOR PERSONNEL-OCCUPIED AREAS

TABLE OF CONTENTS

PARAGRAPH PAGE

B.1 Scope, applicability, and purpose 37
B.1.1 Scope 37
B.1.2 Applicability 37
B.1.3 Purpose 37

B.2 Documents applicable to Appendix B 37

B.3 Definitions 37
B.3.1 A-duration 37
B.3.2 Auditory Hazard Assessment Algorithm for Humans 38
B.3.3 Auditory risk unit 38
B.3.4 Unwarned exposure 38
B.3.5 Warned exposure 38

B.4 General requirements 38
B.4.1 Compliance with main body of standard 38
B.4.2 Manuals 38
B.4.3 Recording procedure 39
B.4.4 Noise contour signage 39
B.4.5 Data storage conventions 39
B.4.5.1 Units 39
B.4.5.2 Data format 39
B.4.5.3 Sampling rate 39
B.4.5.4 File size 39
B.4.6 Measurement procedure 39
B.4.6.1 Single-impulse systems 39
B.4.6.2 Repetitive systems 39
B.4.6.3 Weapon position 39

Source: https://assist.dla.mil -- Downloaded: 2016-10-21T10:43Z
Check the source to verify that this is the current version before use.

B.4.6.4 Noise contour 40
B.4.6.5 Ammunition temperature 40

B.5 Detailed requirements 40
B.5.1 Noise limits 40
B.5.1.1 Procedure for calculating hazard using individual impulse samples 41
B.5.1.2 Auditory risk units 41
B.5.1.3 $L_{IAeq100ms}$ 41
B.5.2 Auditory risk unit (ARU) metric 43
B.5.2.1 ARU metric test requirements 43
B.5.2.2 Calculating ARUs with the AHAAH model 43
B.5.3 $L_{IAeq100ms}$ metric 44
B.5.3.1 $L_{IAeq100ms}$ metric acceptance criteria 44
B.5.3.2 Noise limits 44
B.5.3.3 Noise limits with hearing protection 45
B.5.3.4 Impulsive noise dose calculation for a single impulse using $L_{IAeq100ms}$ 45
B.5.3.5 Pressure histories 46

B.6 Notes 46
B.6.1 Intended use 46
B.6.2 Details specified by the procuring activity 47
B.6.3 Information to the development test agency 47
B.6.4 Earmuff seal failures 47

Annex A The Auditory Hazard Assessment Algorithm for Humans 48

Source: https://assist.dla.mil -- Downloaded: 2016-10-21T10:43Z
Check the source to verify that this is the current version before use.

B.1. Scope, applicability, and purpose.

B.1.1 Scope. This Appendix establishes impulsive noise limits and prescribes testing requirements and measurement techniques for determining conformance to impulsive noise limits.

B.1.2 Applicability. This Appendix applies to the acquisition and product improvement of all designed, or purchased (non-developmental items) systems, subsystems, equipment, and facilities where impulsive noise equals or exceeds 140 dBP peak pressure level at personnel occupied areas (e.g., operator, maintenance, observer, and other control positions). This Appendix addresses impulsive noise levels emitted during the full range of typical operational conditions.

B.1.3 Purpose. This Appendix provides criteria for designing and selecting materiel having impulsive noise levels that minimize noise induced hearing loss.

B.2. Documents applicable to Appendix B.

MIL-HDBK-1908	Definitions of Human Factors Terms
ANSI/ASA S1.1	Acoustical Terminology
ANSI/ASA S2.20	Estimating Air Blast Characteristics for Single Point Explosions in Air, with a Guide to Evaluation of Atmospheric Propagation and Effects
ANSI/ASA S12.42	Methods for the Measurement of Insertion Loss of Hearing Protection Devices in Continuous or Impulsive Noise Using Microphone-in-Real-Ear or Acoustic Test Fixture Procedures
ANSI/ASA S12.68	Methods of Estimating Effective A-Weighted Sound Pressure Levels When Hearing Protectors are Worn

(The above documents are those cited in this Appendix. For applicability and ordering information, see preambles and addresses in Section 2 of the main body of the standard.)

B.3. Definitions. Unless defined below, terms are defined per MIL-HDBK-1908. Terms not appearing in MIL-HDBK-1908, are defined per ANSI/ASA S1.1.

B.3.1 A-duration. The time interval between impulse onset and the first crossing with the baseline (see Figure B-1).

Source: https://assist.dla.mil -- Downloaded: 2016-10-21T10:43Z
Check the source to verify that this is the current version before use.

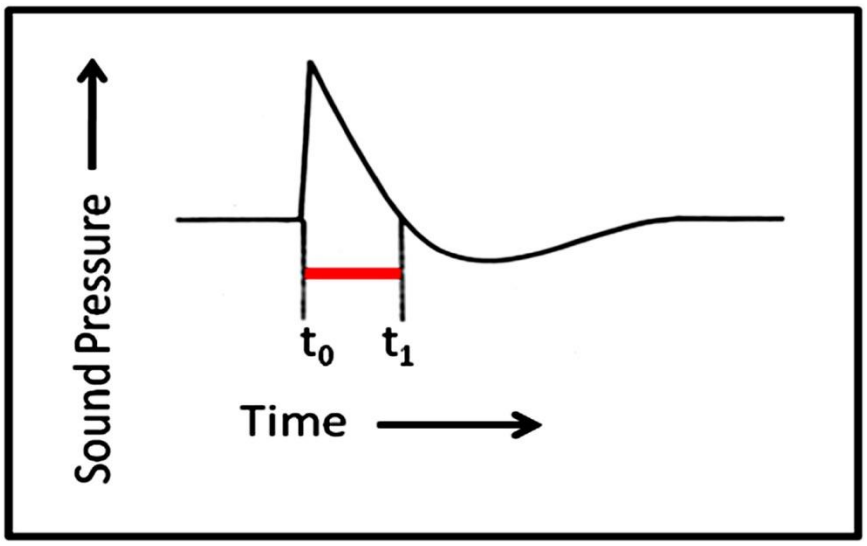

FIGURE B-1. Measurement of A-duration.

NOTE: The baseline is determined as follows: Working back in time from the peak pressure level, average the level over 5 ms intervals until all deviations about the average are within 5 percent of the average for at least 2 ms. This average is an estimate of the baseline.

B.3.2 Auditory Hazard Assessment Algorithm for Humans (AHAAH). A mathematical model of the ear created to provide risk evaluation for impulsive noise.

B.3.3 Auditory risk unit (ARU). A unit of exposure developed to estimate the effect of impulsive noise on the human ear, as determined by using AHAAH.

B.3.4 Unwarned exposure. An exposure is considered “unwarned” if the person whose ears are exposed does not know when to expect an impulsive noise.

B.3.5 Warned exposure. An exposure is considered "warned" if the person whose ears are exposed knows when to expect an impulsive noise (e.g., a gunner who knows when his or her weapon is going to fire, there is a countdown to the firing, or the next impulsive event is part of a series of events that are closely spaced as in the firing of a machine gun).

B.4. General requirements.

B.4.1 Compliance with main body of standard. Compliance with the provisions of this Appendix shall be in addition to compliance with the applicable provisions of the main body of the standard and, in the case of conflict, shall supersede the requirements of the main body.

B.4.2 Manuals. Operation and maintenance manuals (e.g., field and technical manuals) shall contain appropriate discussion of noise hazards. Discussion shall include the requirement

Source: https://assist.dla.mil -- Downloaded: 2016-10-21T10:43Z
Check the source to verify that this is the current version before use.

for hearing protection, the type of hearing protection recommended, and the distance at which the 140 dBP peak pressure level will be exceeded.

B.4.3 Recording procedure. The pressure waveform shall be obtained by equipment meeting the instrumentation specifications in 4.7. The pressure histories should be digitized and stored on any suitable digital storage medium. The digitizing rate and calibration data permitting the waveform to be reproduced accurately shall be stored with the data; but shall be separable from the raw pressure history. The values in the files shall be stored as described in B.4.5.

B.4.4 Noise contour signage. The maximum distance at which 140 dBP peak pressure is obtained shall be indicated on the noise hazard signs in 4.2.2.2. Where the impulsive noise level equals or exceeds 140 dBP peak pressure level, the distances and directions from the noise source at which the noise level is equal to 140 dBP shall be determined.

B.4.5 Data storage conventions.

B.4.5.1 Units. Pressures shall be stored in units of Pascals.

B.4.5.2 Data format. Pressures shall be stored in American Standard Code for Information Interchange (ASCII) characters with no header, or as Waveform Audio File Format (WAVE, or more commonly known as WAV due to its filename extension) files.

B.4.5.3 Sampling rate. The sampling frequency must be kept with the raw data, or in a "readme" file if required by the file format selected.

B.4.5.4 File size. Individual raw data waveform files shall be limited to one second duration unless the event being recorded exceeds one second in duration. Repetitive events, such as machine gun fire, shall include at least five individual events regardless of file length.

B.4.6 Measurement procedure.

B.4.6.1 Single-impulse systems. The pressure history of the impulsive noise shall be obtained by producing one impulse at a time.

B.4.6.2 Repetitive systems. A pressure history of the full range of noises produced by the system shall be recorded, e.g., a 5-round burst from a .50 caliber automatic weapon.

B.4.6.3 Weapon position. Weapons shall be tested in all positions and in the system locations from which they are normally fired. Howitzers, mortars, tanks, and other crew-served weapons shall be tested at a minimum of three tube elevations (minimum, maximum, and typical). Variations in azimuth of either weapon type that could increase noise exposure of crew or other individuals in the vicinity of the weapon system shall each also be measured. At least the top two charges of one type of cartridge used with the weapon shall be measured. The procuring activity will specify whether additional charges or cartridge types should be evaluated. Shoulder-fired weapons shall be evaluated when fired from an enclosure if a normal condition of

Source: https://assist.dla.mil -- Downloaded: 2016-10-21T10:43Z
Check the source to verify that this is the current version before use.

use, in addition to when fired outdoors. Enclosure configurations, firing angles, and cartridge types to measure shall be specified by the procuring activity. Ammunition tested shall be temperature conditioned at minimum, ambient, and maximum anticipated use temperatures. Positions for shoulder-fired and handheld weapons tested outdoors shall have the barrel or tube centerline parallel to the ground at the heights shown in Table II.

B.4.6.4 Noise contour. A 140 dBP noise contour shall be determined by measuring around the major noise source at angular increments not greater than 30°.

B.4.6.4.1 Weapon angular positions. The initial angular position should be the most forward occupied angular location (to account for firing in formation, where applicable), or at 90° relative to the line of fire if there is no forward occupied location.

B.4.6.4.2 Weapon elevation. Measurements around the weapon shall be made at the elevations in B.4.6.3.

B.4.6.4.3 Symmetry. Previously demonstrated symmetry of noise radiation from the source may be used to minimize measurement directions. Measurements shall capture all expected asymmetrical sound radiation patterns. For example, measurements shall be made at least through 180° for weapons that have laterally symmetric radiation patterns.

B.4.6.4.4 Expected distance of 140 dBP contour. The measurements shall be made at the expected distance of the 140 dBP contour. If this distance is impractical, the pressure can be extrapolated from measurements made closer to the weapon, but the extrapolation shall be based on spherical divergence (6 dB per doubling of distance). This will result in conservative estimates, particularly if measurement distances are selected where the level is greater than 150 dBP.

B.4.6.4.5 Distance estimate. Procedures outlined in ANSI/ASA S2.20 shall be used to estimate the 140 dBP contour distance or identify the distance by pre-testing or using data from analogous testing.

B.4.6.4.6 Peak pressure less than 140 dBP. If the peak pressure level is less than 140 dBP, the distance for that measurement shall define the 140 dBP contour distance unless additional measurements demonstrate a closer contour distance; backward extrapolation is not permitted.

B.4.6.5 Ammunition temperature. Where the impulsive noise emanates from rapid burning of a propellant, additional measurements should be taken with the propellant at the upper and lower operating temperature conditions specified by the system requirements.

B.5. Detailed requirements.

B.5.1 Noise limits. Assessment of impulsive noise limits for equipment designers and manufacturers shall be established through use of either the auditory risk unit (ARU) or the

Source: https://assist.dla.mil -- Downloaded: 2016-10-21T10:43Z
Check the source to verify that this is the current version before use.

$L_{IAeq100ms}$ metric (see B.5.2 and B.5.3 respectively). The DoD component or activity shall determine which metric is to be used to evaluate the noise limits of the system under test. The auditory risk unit metric shall be used to determine impulsive noise limits for systems procured by the U.S. Army for U.S. Army use. For joint service programs, measurements shall be evaluated in accordance with individual service requirements. Table B-II compares the auditory risk unit and $L_{IAeq100ms}$ metrics.

B.5.1.1 Procedure for calculating hazard using individual impulse samples. In testing, it is common to measure waveforms for a number of impulses under each test condition. The hazard for each test condition shall be the maximum valid value for the individual impulses measured. Alternatively, if sufficient impulses are measured, the hazard may be established by following the guidance in U.S. Army Public Health Command Technical Guide 338. This method has come to be known as the proportional dose (PD) method. The number of test rounds required for PD calculations shall be at least 20, and preferably 30 or more; fewer samples can yield potentially misleading results due to variability inherent in the calculation procedure with small sample sets.

B.5.1.2 Auditory risk units. ARUs are computed using the Auditory Hazard Assessment Algorithm for Humans (AHAAH) model which allows calculation of hazards for warned and unwarned exposures for three levels of hearing protection: exposures with no hearing protection devices (HPDs), with a single HPD (plugs or muffs), and with double HPD (plugs and muffs). AHAAH includes eleven default hearing protection configurations which cover most operational conditions (see Table B-A-I in Annex A). The “no protector” choices are included to allow unmitigated risk assessments and theoretical exploration of what would happen if no protection were worn and does not represent approval of exposures at or above 140 dBP peak without hearing protection.

B.5.1.3 $L_{IAeq100ms}$. $L_{IAeq100ms}$ is a metric that employs the “equal energy” model characterizing the equivalent total energy of the impulse calculated for 100 milliseconds (ms). The $L_{IAeq100ms}$ metric can be used to compute a noise dose relative to a single occurrence impulsive noise and the impulsive dose from one or many shots can be added with the dose from continuous noise. In this way, the $L_{IAeq100ms}$ metric could be used to assess the noise exposure dose from combined continuous and impulsive noise exposure. The procuring activity should provide direction on how to address the combined effects of both a steady-state and impulsive noise.

Source: https://assist.dla.mil -- Downloaded: 2016-10-21T10:43Z
Check the source to verify that this is the current version before use.

TABLE B-II. Comparison between the auditory risk unit and the $L_{IAeq100ms}$ metrics.

Auditory Risk Units (calculated with the AHAAH model)	**Equal Energy Equivalent Averaged Over 100 ms Intervals ($L_{IAeq100ms}$)**
Auditory risk unit (ARU) calculations require the AHAAH model software and expertise in its use.	$L_{IAeq100ms}$ calculations are simple; no computer program is required.
ARUs are computed using the AHAAH model which allows calculation of hazards for warned and unwarned exposures for three levels of hearing protection. AHAAH is an electro-acoustic model of the ear designed with a goal of matching the physiology of the ear--element for element-- and incorporating non-linear behaviors of the ear. AHAAH enables designers to see how much each part of the impulsive waveform contributes to the ARU calculation.	$L_{IAeq100ms}$ is an impulsive noise-tailored variation of the L_{eq8} metric used to assess the potential of hearing damage from steady state or continuous noise exposure. L_{eq8} has an empirical foundation based on human responses to impulsive noise but can overestimate the hearing damage risk for long duration impulses. $L_{IAeq100ms}$ includes a correction for long duration impulses.
AHAAH includes a module to predict at-ear (under the hearing protector) waveforms. Predictions are based on hearing protector Real Ear at Threshold (REAT) attenuation performance. This module assumes linear attenuation by the hearing protector at levels up to 170 dBP except for protectors with non-linear or level dependent design features. Testing done in accordance with ANSI/ASA S12.42 shows that hearing protectors have significant non-linear attenuation beginning at about 170 dBP. The hearing protector module in AHAAH is based on REAT attenuation performance and should be used only if ANSI/ASA S12.42 data are not furnished by the procuring activity for the default hearing protection configuration appropriate to the item undergoing evaluation.	$L_{IAeq100ms}$ calculations for estimating damage risk when using hearing protectors with peak insertion loss/impulsive attenuation data from ANSI/ASA S12.42. ANSI/ASA S12.42 assesses the performance of hearing protectors at a minimum of three different levels of impulsive noise and captures the non-linear behavior of hearing protection in impulsive noise environments. The bone conduction limits for the hearing protectors are described in para 9.6.3 of ANSI/ASA S12.42.
AHAAH has been peer-reviewed and systematically evaluated against various datasets. The American Institute of Biological Sciences' review generally supported the AHAAH model although recommended that several critical assumptions embedded in the model--especially the influence of the middle ear reflex under various conditions--need further research while a measure based on Leq8 can be used as an interim metric.	$L_{IAeq100ms}$ has not yet been systematically evaluated or peer-reviewed. However, it is based on the L_{eq8} metric used by many European Union countries for assessing hearing damage risk from impulsive noise. Additionally, the L_{eq8} metric was recommended by the American Institute of Biological Sciences as an interim metric until several critical assumptions embedded in the AHAAH model could be further researched.
The AHAAH model is being used as hazard criteria by at least one other nation, and is used by the automobile industry to evaluate risk of hearing loss from airbag deployment.	The L_{Aeq8} metric is used by the European Union and several European countries and the $L_{IAeq100ms}$ metric is a variation of the L_{eq8} metric.

NOTE: Both the auditory risk units and the $L_{IAeq100ms}$ metrics result in similar hazard predictions for impulses lower than 160 dB; both methods are superior to the methods of MIL-STD-1474D.

Source: https://assist.dla.mil -- Downloaded: 2016-10-21T10:43Z
Check the source to verify that this is the current version before use.

B.5.2 Auditory risk unit (ARU) metric.

B.5.2.1 ARU metric test requirements.

B.5.2.1.1 General.

B.5.2.1.1.1 Acceptance criteria. The hazard rating for occasional (no more than once per week) impulsive noise exposure within any 24-hour sliding window period shall not exceed 500 ARUs as calculated by AHAAH. For occupational exposures which happen two or more times per week, the limit shall not exceed 200 ARUs per 24-hour sliding window period. Exceeding these limits may result in noise induced hearing loss (NIHL).

B.5.2.1.1.2 Allowable number of impulses per day. The allowable number of impulses per day shall be calculated by dividing the 24-hour maximum allowable exposure (500 ARUs or 200 ARUs) by the hazard (in ARUs) for the individual test condition. For example, if for an individual impulsive event with a hazard rating of 10 ARUs, the maximum number of impulses permitted per day for occasional exposure is 50 (500 ARU/24-hour divided by 10 ARU/event).

B.5.2.2 Calculating ARUs with the AHAAH model.

B.5.2.2.1 Use of the AHAAH model. A description and demonstration of the use of the AHAAH model are presented in Annex A. An outline of the key elements of its use is presented here.

B.5.2.2.1.1 Importation of the pressure histories. In order to be analyzed, raw data waveforms must first be imported into the AHAAH model. During this process, they are edited to correct any baseline offset (using the “Set Baseline” tool), are trimmed to a suitable length (using the “Select Segment” tool), are adjusted in amplitude so the data are properly calibrated in Pascals (using the “Calibrate” tool), have the start point for calculation set (using the “Establish Start” tool), have the ends of the pressure histories tapered to minimize artifactual effects (using the “Taper Ends” tool), and the sampling rate information is added to the headers (by entering the sampling rate value in the “Sampling Rate” parameters in the header area). The above tools are included with the AHAAH model. Importation is complete when the waveform is saved as a file with the .AHA extension.

B.5.2.2.1.2 Application of hearing protection. The analysis consists of loading an imported file into the AHAAH model and selecting the appropriate hearing protection. There are 11 default hearing protectors for use in this standard. Table B-A-I in Annex A describes configurations, characteristics, and typical applications of each default hearing protector. Based on requirements documents or design guidance, either no protection or one or more specific models of default hearing protector is selected for assessment. These default configurations provide a selection of plugs, muffs, plus various combinations of double hearing protection suitable for operational scenarios typical of mounted and dismounted combat where there may be exposure to impulsive noise. Each of these default configurations is based on the minimum acceptable performance characteristics of a particular family of hearing protection devices.

Source: https://assist.dla.mil -- Downloaded: 2016-10-21T10:43Z
Check the source to verify that this is the current version before use.

Appropriate default hearing protectors are acceptable for use in meeting the impulsive noise requirements of this standard unless specific hearing protection devices are specified by the procuring activity.

B.5.2.2.1.3 Analysis of the waveform for hazard. Analysis of the protected ear for hazard is a two-step process.

B.5.2.2.1.3.1 Apply hearing protection. Hearing protection is selected as described in B.5.2.2.1.2. The imported waveform is analyzed using the selected hearing protection. This generates an estimated under-hearing protection (protected) waveform which can then be further analyzed to determine hazard.

B.5.2.2.1.3.2 Calculate permissible exposures. Using the "protected" waveform obtained in B.5.2.2.1.3.1 above, select "analyze" to determine the number of ARUs associated with the waveform. Determine allowable number of daily exposures in accordance with B.5.2.1.1.2.

B.5.3 $L_{IAeq100ms}$ metric.

B.5.3.1 $L_{IAeq100ms}$ metric acceptance criteria. The impulsive noise dose for any 24-hour period shall not exceed 100% as computed in B.5.3.4 when hearing protection specified by the procuring activity is used.

NOTE: The impulse must be measured with each type of hearing protector specified by the procuring activity.

B.5.3.2 Noise limits. For noise exposures in which the peak pressure level is 140 dBP or greater, the hazard shall be established through use of $L_{IAeq100ms}$. Equations 1a and 1b give the formula for computing the $L_{IAeq100ms}$ from discrete impulsive waveforms. Normally, most impulsive waveforms are not more than 100 ms in length. However, the recording time can be adjusted to ensure the capture of the total impulsive waveform. The computation of the $L_{IAeq100ms}$ shall be adjusted for the duration of the recording.

$$L_{IAeq100ms} = 10\ log_{10}\left\{\frac{1}{p_0^2\ T}\int_0^T {p_A}^2(t)\ dt\right\} \qquad \text{(Equation 1a)}$$

$$L_{IAeq100ms} = 10\ log_{10}\left\{\left({}^{1}/_{T}\right)\sum_{i=1}^{n}\left\{10\ log^{-1}\ \left[\frac{L_{Ai}}{10}\right] \times\ \Delta t_i\right\}\right\} \qquad \text{(Equation 1b)}$$

where $p_0 = 20$ microPascals is the reference pressure, T = 100 ms is the integration time, and $p_A(t)$ is the A-weighted pressure in Pascals as a function of time.

NOTE: Care should be exercised to ensure that the waveform in Pascals, as required by this Standard, must be converted to an A-weighted waveform in Pascals before use in calculating L_{IAeq} metrics.

Source: https://assist.dla.mil -- Downloaded: 2016-10-21T10:43Z
Check the source to verify that this is the current version before use.

B.5.3.3 Noise limits with hearing protection. If hearing protection is being used, then apply reduction due to hearing protection using impulsive peak insertion loss (IPIL) from ANSI/ASA S12.42 (Equation 2a), if available, or using the noise level reduction statistic for use with A-weighting from ANSI/ASA S12.68 (Equation 2b).

$$L_{IAeq100ms\ protected} = 10\ log_{10}\left\{\left({}^{1}/_{T}\right)\sum_{i=1}^{n}\left\{10\ log^{-1}\left[\frac{L_{Ai}-IPIL}{10}\right]\times\ \Delta t_i\right\}\right\} \qquad \text{(Equation 2a)}$$

$$L_{IAeq100ms\ protected} = 10\ log_{10}\left\{\left({}^{1}/_{T}\right)\sum_{i=1}^{n}\left\{10\ log^{-1}\left[\frac{L_{Ai}-NRSa}{10}\right]\times\ \Delta t_i\right\}\right\} \qquad \text{(Equation 2b)}$$

where L_{Ai} is the A-weighted level in dB re 20 microPascals of the waveform for the ith sample, Δt_i is the sample time in seconds, and T is the integration time in seconds, typically 0.1 seconds (100 ms). T=$\Delta t_i * n$

Notes:

1. Use the ANSI/ASA S12.42 hearing protector IPIL values for the test level (137, 155, or 173 dBP) which are closest to the measured peak level of the impulsive noise.
2. The impulsive peak insertion loss used in the computations shall not exceed 41 dB. This limitation is due to bone conduction noise and is a conservative limit, i.e., in most cases the real protection will be higher.
3. If the peak impulsive noise levels exceed 180 dBP, then measure the IPIL of the hearing protector at the measured peak impulsive noise level to account for the non-linear effects on insertion loss and possible loss of the acoustic seal due to the impulsive noise.
4. Alternatively, the impulsive waveform may be recorded under the hearing protector at the entrance to the ear canal using either human subjects or an acoustic test fixture which complies with ANSI/ASA S12.42. This should be accomplished using a minimum of five repetitions of the impulse with the hearing protector being refit for each impulse. Equation 1a or 1b can then be used to compute the $L_{IAeq100ms}$.
5. The ANSI/ASA S12.42 method of measuring peak insertion loss does not account for variations in impulse duration but is a conservative estimate of performance. The ANSI S12.42 method results in impulsive peak insertion loss values which represent the nominal worst case performance. Especially for short duration impulses, the impulsive peak insertion loss values would be higher than those measured with the ANSI/ASA S12.42 procedure.

B.5.3.4 Impulsive noise dose calculation for a single impulse using $L_{IAeq100ms}$. A dose correction shall be applied where the A-duration has been measured. This correction reduces the overprediction of noise dose by the $L_{IAeq100ms}$ metric for impulses with A-duration longer than 0.2 ms.

B.5.3.4.1 Compute the L_{IAeq} for a single impulse. Compute the L_{IAeq} for a single impulse using Equation 3a for A-durations less than 2.5 ms or Equation 3b for A-durations equal to or greater than 2.5 ms.

$$L_{IAeq8hr} = (L_{IAeq100ms}) - 54.6 - 1.5 * 10 * \log_{10}\left(\frac{\text{A-duration}}{0.2\ \text{ms}}\right) \qquad \text{(Equation 3a)}$$

Source: https://assist.dla.mil -- Downloaded: 2016-10-21T10:43Z
Check the source to verify that this is the current version before use.

$$L_{IAeq8hr} = L_{IAeq\ 100ms} - 71.0 \qquad \text{(Equation 3b)}$$

Notes:

1. The $L_{IAeq100ms}$ to be used in Equations 3a and 3b are those calculated in Equations 1a and 1b without hearing protection or Equations 2a and 2b when hearing protection is applied.
2. For the purpose of the calculation, the A-duration is limited to a maximum of 2.5 ms (i.e., the measured A-duration could be 4.5 ms but 2.5 ms would be used in the calculation of the $L_{IAeq8hrs}$).
3. For the purpose of the calculation, the A-duration is limited to a minimum of 0.2 ms (i.e., the measured A-duration could be 0.1 ms but 0.2 ms would be used in the calculation of the $L_{IAeq8hrs}$).
4. Where the A-duration is not measured, 0.2 ms shall be used for the A-duration in Equation 3a resulting in no correction, i.e., defaulting to $L_{IAeq8hr} = L_{IAeq100ms} - 54.6$. This will result in overestimation of the exposure for long duration impulses but will be an accurate estimation of hazard for short duration impulses.
5. If recording times greater than 100 ms are used, 54.6 dB becomes 10 log (recording time/28,800) where the recording time is in seconds.

B.5.3.4.2 Compute the impulsive noise dose for a single impulse. Compute the impulsive noise dose (D_I), in percent, for a single impulse using Equation 4.

$$D_I\ (\%) = 100/2^{(85-L_{IAeq8hr})/3} \qquad \text{(Equation 4)}$$

Notes:

1. Multiply the dose by the number of impulses within the 8-hour period to compute the impulsive noise dose for the 8-hour period.
2. The dose from all impulses associated with compliance with B.5.3.4 shall be summed.

B.5.3.5 Pressure histories. Pressure histories shall have been recorded and stored in keeping with the applicable conventions in this standard (see B.4.6).

B.6. Notes.

B.6.1 Intended use. This Appendix is intended for use as an impulsive noise criteria design standard for military materiel, cited contractually in system specifications, and elsewhere, and for use as a basis for that part of noise testing where design characteristics are assessed for purposes of acceptance. It is not intended for use to express binding requirements in conceptual and other early acquisition phases. This Appendix may be applied to developmental, as well as non-developmental item (NDI) acquisitions.

Source: https://assist.dla.mil -- Downloaded: 2016-10-21T10:43Z
Check the source to verify that this is the current version before use.

B.6.2 Details specified by the procuring activity. Acquisition documents should specify the following:

a. Additional charges or cartridge types to be measured (see B.4.6.3).

b. Enclosure configurations and firing angles to be used during weapon measurements (see B.4.6.3).

c. The metric to be used to evaluate the noise limits of the system under test (see B.5.1).

d. Direction on how to address the combined effects of both a steady-state and impulsive noise (see B.5.1.3).

e. The use of specific types of hearing protection if operational needs dictate use of non-standard-issue hearing protection, or standard-issue hearing protection used in a new application (see B.5.2.2.1.2).

f. The hearing protection to be used in the calculation of impulsive noise dose (see B.5.3.1).

g. Identify the default category of hearing protectors provided in Table B-A-I

h. Whether the impulsive noise exposure is warned or unwarned. For the conduct of the AHAAH analyses, the exposure must be selected to properly calculate the hazard. Consult with the Army Hearing Program if in doubt. In general, those individuals who are responsible for triggering a weapon to fire can be considered warned, but there are exceptions, including sniper gunners and those responsible for firing weapons where there is an unknown delay in the weapon activation. All other crew can be considered unwarned, unless there is a countdown or command given immediately prior to weapon activation.

B.6.3 Information to the development test agency. Developing agencies should make appropriate information available to the development test agency, as required, to ensure that test conditions, impulsive noise limit selection, and evaluation of results are consistent with system requirements, specified hearing protection requirements, if any, and general procuring activity-specified requirements relevant to the provisions of this Appendix.

B.6.4 Earmuff seal failures. Recent evidence shows that the seal for earmuffs may fail 25 ms after exposure to levels in excess of 185 dBP. The Hearing Protector Module used with AHAAH assumes that the seal is maintained. Conditions that allow seal failure to occur depend on the clamping force provided by earmuff headbands and other mechanisms that hold the earmuff in place (such as chin straps and helmets), but to an unquantified degree. Earplugs do not exhibit this effect. Additionally, eyeglass temple pieces and other protective eyewear may break the earmuff seal and may result in higher than predicted impulsive pressure levels at the ear. Therefore earmuff-protected exposure assessments made with AHAAH when the seal is lost may be inaccurate, as would any assessment where performance requires a seal to be maintained.

Source: https://assist.dla.mil -- Downloaded: 2016-10-21T10:43Z
Check the source to verify that this is the current version before use.

ANNEX A

The Auditory Hazard Assessment Algorithm for Humans

B-A.1 Background.

B-A.1.1 The Auditory Hazard Assessment Algorithm for Humans. The Auditory Hazard Assessment Algorithm for Humans (AHAAH) is an electroacoustic analog of the ear structured to match the physiology of the ear, element for element. It was developed first for the cat ear where temporary threshold shift (TTS), permanent threshold shift (PTS), and cellular changes could be examined. It reproduces the measured transfer functions from the free field to the stapes and translates stapes motion into basilar membrane displacements. It keeps track of the displacements at 23 locations (roughly one-third octave intervals) and derives a dose at each location by squaring the peak amplitude of each upward displacement of the basilar membrane (in microns) and summing them for the analysis interval. The result (at each location) is in auditory risk units (ARU):

$$\text{ARU} = \text{sum}\ (D^2)$$

where D is the upward basilar membrane displacement (in microns).

B-A.1.2 Relationship between ARUs and compound threshold shift. There is a direct relationship between the number of ARUs for an exposure and the resultant compound threshold shift (CTS) in an ear highly similar to the human ear (cat). (Ethical considerations as well as those for scientific accuracy required the use of an animal ear in which the experimental stimulation would produce physical damage.) It is:

$$\text{CTS} = 26.6\ \text{Ln}\ (\text{ARU}) - 140.1$$

There is a corresponding generic relationship between ARUs and CTS for the human cochlea. With intense exposures, where the loss mechanism is primarily mechanical stress, recovery begins only very slowly and is not likely to go to completion when a dose of 500 ARUs (25 dB CTS) is exceeded. When the 500 ARU limit is exceeded, the amount of PTS is usually about 0.6 of the loss at 30 minutes. It has been shown that the predicted PTS corresponds to hair cell loss.

B-A.1.3 Warned versus unwarned exposure. Options in AHAAH include accommodating middle ear muscle contractions occurring either before the onset of the stimulus being analyzed (a warned exposure) or a muscle contraction that is elicited by the impulse noise and includes a latency and a growth to full effect (unwarned exposure). In the case of free-field exposures, it also includes a transfer function from the free field to the eardrum, with or without hearing protection in place.

B-A.1.4 Use by the materiel developer. AHAAH provides an analysis representative of the 95th percentile ear (most susceptible). The model also makes a movie of the action of the

Source: https://assist.dla.mil -- Downloaded: 2016-10-21T10:43Z
Check the source to verify that this is the current version before use.

sound in the cochlea as a means of providing analytical insight into the damage processes in the time domain. This feature is of significant value to the materiel designer because it permits dissecting the impulsive event to determine which portion of the event contributes significantly to the hazard.

B-A.2 Analysis with AHAAH.

B-A.2.1 Evaluation of risk. AHAAH evaluates auditory hazard for the 95th percentile (most susceptible) human ear for sounds traveling toward the side of the head (a worst-case condition). Additionally, AHAAH can evaluate auditory hazard for grazing incidence (such as experienced by a human firing a rifle). AHAAH calculates the auditory risk of intense sounds by modeling their effects from the free field, through a hearing protector, through the middle ear, and into the inner ear, which is where damage typically occurs. AHAAH includes the effect of active middle ear muscle contractions (and the user may choose between whether such effects are elicited voluntarily or involuntarily). Results of AHAAH analyses are measured in ARUs that bear a physical relationship to calculated displacements in the inner ear and damage resulting from them. The calculation is accomplished at 23 evenly spaced locations along the basilar membrane and the location with the largest value is reported. This value is directly related to change in hearing sensitivity. A dose of 500 ARUs is just safe, meaning that there may be temporary changes in hearing sensitivity of up to 25 dB, but recovery should occur within 24 hours and no significant permanent hearing loss is expected from the exposure. Doses at very high levels producing a threshold shift should be thought of as like a muscular strain or a bruise–tolerable occasionally, but not to be experienced daily. A dose of 200 ARUs, given that it predicts no threshold shift, would be completely protective as an occupational dose limit where daily or near daily exposures could occur. AHAAH allows calculations for conditions where (1) no protection; (2) a specific hearing protective device (HPD) (either a plug or a muff); or (3) double protection (plug and muff) are properly fitted and worn. The hearing protection module, described in B-A.3.4 and B-A.4, permits selection of appropriate hearing protection based on user-selectable parameters, such as requirements document statements or the operational environment involved.

B-A.2.2 Analysis of separate impulses. The ARUs from separate impulses should be analyzed separately and summed to arrive at the total dose. One large impulse with 400 ARUs is equivalent to four impulses, each with 100 ARUs, or 100 impulses each with four ARUs.

B-A.3 Obtaining, installing, and using AHAAH.

B-A.3.1 Obtaining AHAAH. AHAAH is a Windows® –based software product. It is managed and made available to the users of MIL-STD-1474 by the U.S. Army Research Laboratory (ARL). The version of AHAAH approved for use with MIL-STD-1474 resides on the ARL public website and is available for free download at http://www.arl.army.mil/ahaah. AHAAH's initial screen view is shown in Figure B-A-1.

B-A.3.2 File importation. Digital pressure histories, recorded as specified in MIL-STD-1474, must be imported into the model. During this process, the user provides the sampling

Source: https://assist.dla.mil -- Downloaded: 2016-10-21T10:43Z
Check the source to verify that this is the current version before use.

frequency (determined by the digitizer at the time of recording) and edits the waveform to remove extraneous material and to calibrate it. When the edited waveform is saved it acquires a header and an .AHA extension.

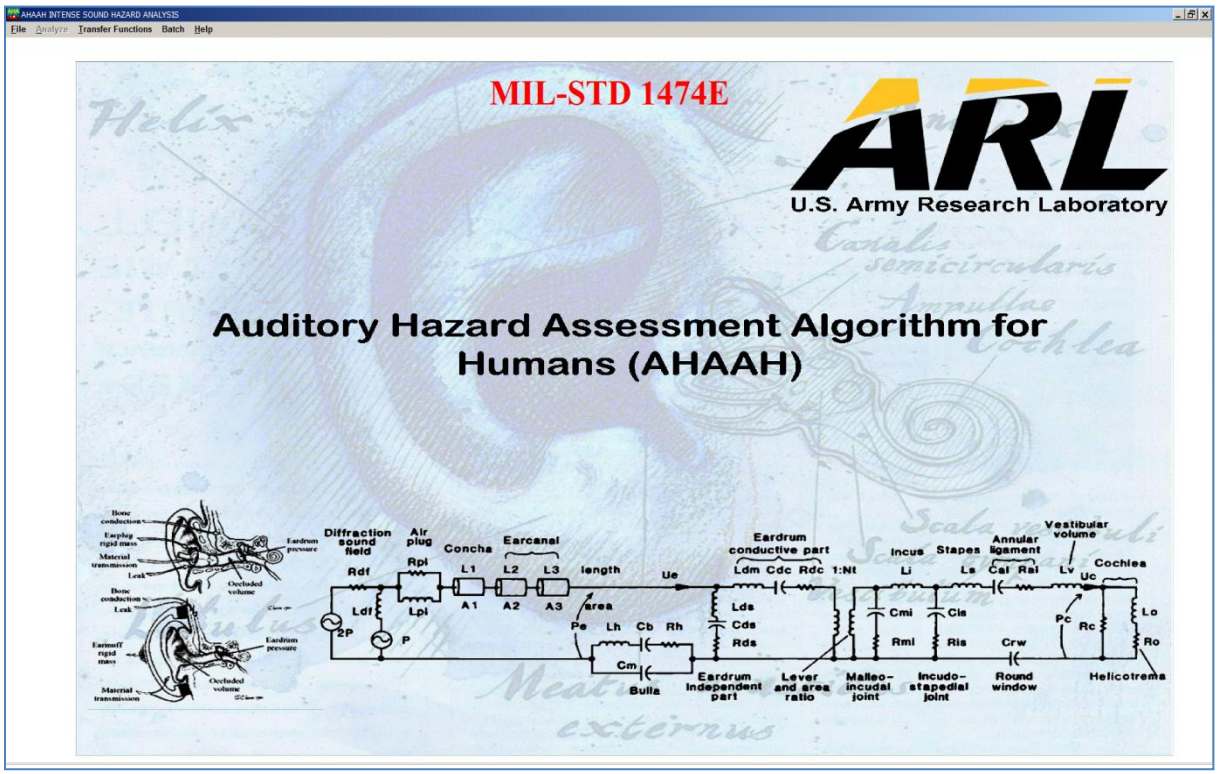

FIGURE B-A-1. The AHAAH software initial view.
(Ear graphic courtesy of E. H. Berger, 3M Personal Safety Division, St. Paul, MN)

B-A.3.3 Analysis. To analyze a file with an .AHA extension, the program is run and analysis options are chosen. The AHAAH program provides numeric output in ARUs and (when desired) creates a movie showing the action of the sound on the ear.

B-A.3.4 Hearing protection. For most MIL-STD-1474 evaluations, the operator requires hearing protection in order to safely use the item under test. AHAAH features a hearing protection module described below. This module permits the user to apply appropriate hearing protection to quantify the hearing hazard to the user when wearing appropriate protection. Details of this procedure are described below.

B-A.4 Using AHAAH with the hearing protection module.

B-A.4.1 Hearing Protection Module. The AHAAH includes a unique Hearing Protection Module (HPM). This module permits the AHAAH application to analyze all types of worn hearing protection devices (HPD) to provide an estimate of noise hazard caused by impulse

Source: https://assist.dla.mil -- Downloaded: 2016-10-21T10:43Z
Check the source to verify that this is the current version before use.

noise. Using commonly available real ear attenuation at threshold (REAT) HPD data, the model predicts protected responses to free-field waveforms. Since the hearing protection module depends on the HPD mechanics and is coupled to the AHAAH model, it allows assessment of any future HPD design. Figure B-A-2 shows the basic concept behind the hearing protection module and the electro-acoustic analog of the physical parameters that define hearing protection performance.

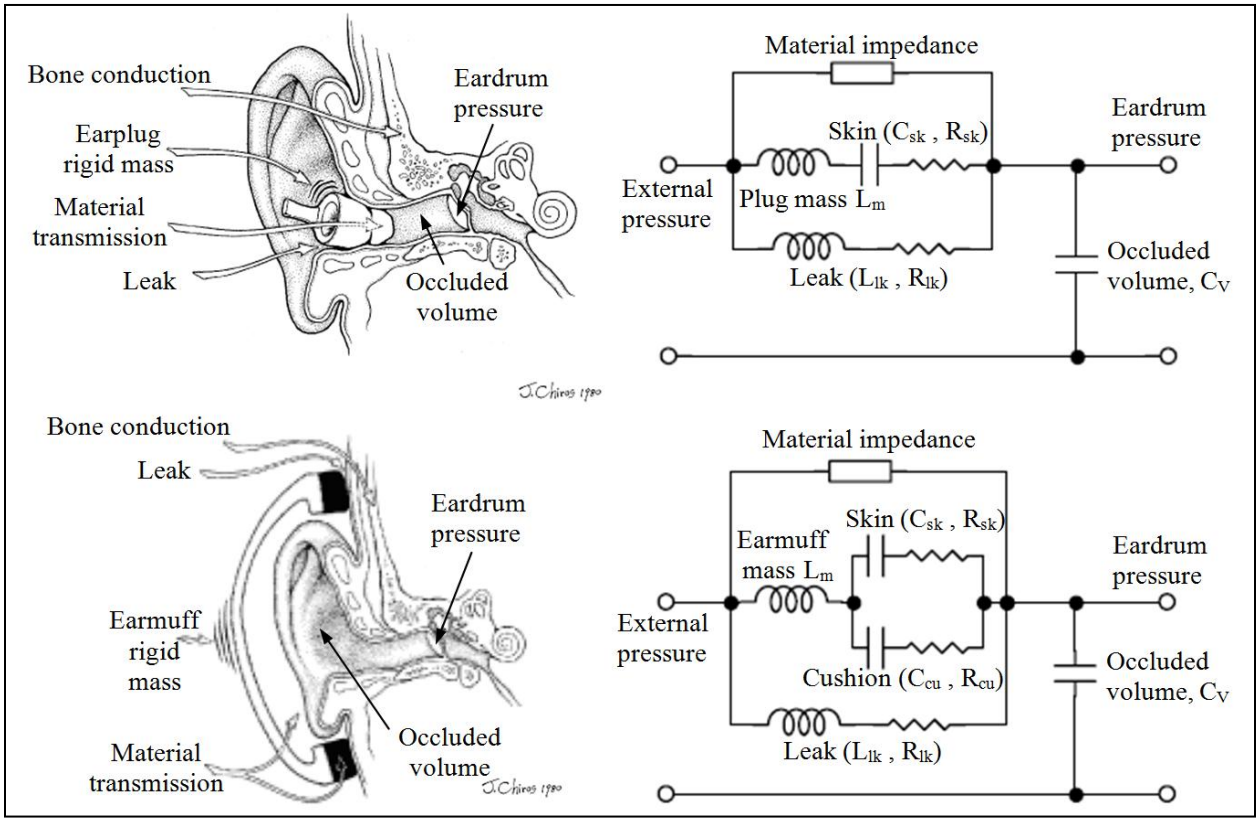

FIGURE B-A-2. The electro-acoustic analog of hearing protection.
(Ear graphic adapted from, and courtesy of, E.H. Berger, 3M Personal Safety Division, St. Paul, MN)

B-A.4.2 HPM description. The HPM integrated with AHAAH applies to both earmuff-type and earplug-type HPDs (plus various combinations of earplugs and earmuffs) and is a three-piston model with individual pistons controlling HPD behavior in the low-, medium-, and high-frequency range, respectively.

B-A.4.3 Hearing protectors. In the hearing protection module, the user must choose the "Default" mode and select the appropriate HPD from a number of hearing protection configurations considered to be "standard" for various military applications. To determine the hazard of an impulse noise under a HPD, the user must select an appropriate hearing protection device to apply to the free-field wave form acquired as described in B-A.3.4. The DoD hearing protector approval process is under development as of the date of this revision, and thus HPD

Source: https://assist.dla.mil -- Downloaded: 2016-10-21T10:43Z
Check the source to verify that this is the current version before use.

data for use with the HPM are not yet available for all default situations. Accordingly, interim substitute data for several applications have been built into the model. Users are advised to contact the U.S. Army Hearing Program, http://phc.amedd.army.mil/organization/institute/doem/Pages/ArmyHearingProgram(AHP).aspx for latest relevant information. Furthermore, users should be aware that data updates, policy changes, and medical criteria changes could mean that calculations performed in accordance with this standard may differ from more recently published data. These configurations, characteristics, and typical applications, are described in Table B-A-I below.

TABLE B-A-I. Default hearing protection configurations.

Default Hearing Protection	Style	Type	Typical Application	Example of an Acceptable Product
Default 01	Plug	Standard level – dependent single hearing protection	Ground soldier needing hearing protection but not electronic communications (e.g., dismounted soldier firing small arms)	Combat arms earplug (level – dependent mode)
Default 02	Plug	Standard level – independent single hearing protection	Ground soldier operating in the vicinity of generators, vehicles, or other sources of steady-state noise	Combat arms earplug (level – independent mode)
Default 03	Muff	Standard TCAP (hearing protection with electronic communications)	Ground soldier needing hearing protection with electronic communications (e.g., dismounted soldier firing small arms)	COMTAC III earmuff
Default 04	Muff	Standard TCAP (hearing protection with electronic communications)	Combat vehicle crewmember in a wheeled combat vehicle	PICVC
Default 05	Plug + Muff	Standard double hearing protection	A soldier in a tracked combat vehicle	PICVC headset (with ANR on) + standard level – independent earplug
Default 06	Plug + Muff	Standard double hearing protection	Ground soldier firing a shoulder fired weapon, especially from within enclosures	Standard double protection
Default 07	Plug + Muff	Standard double hearing protection	Apache (AH-64) helicopter crewmembers	IHADSS integrated helmet + CEPS earplug
Default 08	Plug + Muff	Standard double hearing protection	Helicopter crewmembers (except Apache)	HGU-56/P integrated helmet + CEPS earplug
Default 09	Plug	Standard single	Single hearing protection against weapon	Combat arms earplug (level –

Source: https://assist.dla.mil -- Downloaded: 2016-10-21T10:43Z
Check the source to verify that this is the current version before use.

		hearing protection	firing noise	dependent mode)
Default 10	Plug	Standard single hearing protection	Single hearing protection against sources of steady-state noise	Combat arms earplug (level – independent mode)
Default 11	Plug + Muff	Standard double hearing protection	Double hearing protection	Standard double protection

B-A.4.4 Default hearing protection. Based on requirements documents or design guidance the appropriate default hearing protection is selected. These default configurations provide a selection of plugs; muffs, both linear and non-linear; plus various combinations of double hearing protection suitable for operational scenarios typical of mounted and dismounted combat where there may be exposure to impulse noise. Each of these default configurations is ideally based on the minimal acceptable performance characteristics of a particular family of hearing protection devices. Specific hearing protection devices within the same family should perform equal to or better than the default configurations. However, as stated above, some of the default configurations are estimates of minimal acceptable performance. More than one default HPD may apply; all should be evaluated and the HPD providing the least amount of hearing protection considered during hearing hazard calculations.

B-A.4.5 Power user mode. If the user is interested in the effect of a specific hearing protection device or combination of devices, there are scores of devices available if the “Power User” mode is selected instead of the “Default” mode. The available devices include most known plugs and muffs used by, or considered for use, by the U.S. military.

B-A.4.6 Using AHAAH with a hearing protector. Using AHAAH and applying a hearing protector to a free-field waveform produces the predicted waveform under the hearing protector. Figure B-A-3 shows an example using the Default 01 hearing protector applied to the waveform labeled sample free-field waveform. The upper half of Figure B-A-3 shows how the impulse noise attenuation from the three paths through the HPD predicted by the HPM using the HPD characteristics (green curve) align with the actual REAT data for the HPD (the triangles). The figure shows that the hearing protection module effectively models the hearing protection performance at the listener’s threshold of hearing. The lower half of Figure B-A-3 shows the results of applying the HPM to the free-field waveform (blue curve). The under the protector waveform (green curve) is saved and is then analyzed by AHAAH to determine the hearing hazard to the human user from the free-field waveform filtered by the specific hearing protector parameters.

Source: https://assist.dla.mil -- Downloaded: 2016-10-21T10:43Z
Check the source to verify that this is the current version before use.

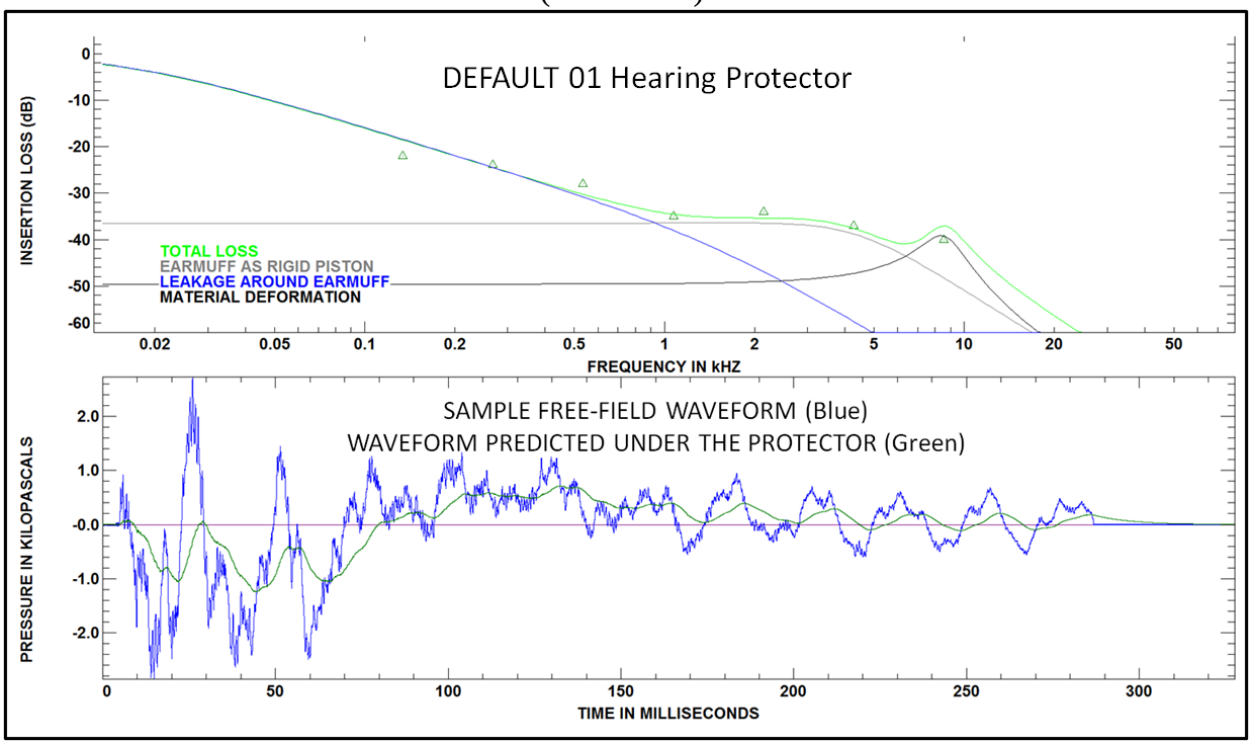

FIGURE B-A-3. A sample free-field waveform processed by AHAAH's Hearing Protection Module.

B-A.4.7 HPD response. The HPM predicts HPD response on the basis of a known free-field sound waveform impinging on the protector following HPD performance established under ANSI-determined REAT tests. Using the free field waveform and the waveform calculated under the HPD as an attenuated free-field stimulus, the AHAAH model can be used to determine ear response by both the unprotected and protected ear and determine respective hearing hazards.

Source: https://assist.dla.mil -- Downloaded: 2016-10-21T10:43Z
Check the source to verify that this is the current version before use.

APPENDIX C

AURAL NON-DETECTABILITY REQUIREMENTS

TABLE OF CONTENTS

PARAGRAPH PAGE

C.1 Scope, applicability, and purpose 57
C.1.1 Scope 57
C.1.2 Applicability 57
C.1.3 Purpose 57

C.2 Documents applicable to Appendix C 57

C.3 Definitions 57

C.4 General requirements 57

C.5 Detailed requirements 57
C.5.1 Noise limits 57
C.5.1.1 Criteria 57
C.5.1.2 Maximum 58
C.5.2 Test requirements 66
C.5.2.1 Equipment operating conditions 66
C.5.2.2 Measurements 66

C.6 Notes 66
C.6.1 Intended use 66
C.6.2 Details specified by the procuring activity 67
C.6.3 Information to the development test agency 67

Source: https://assist.dla.mil -- Downloaded: 2016-10-21T10:43Z
Check the source to verify that this is the current version before use.

This page intentionally left blank.

Source: https://assist.dla.mil -- Downloaded: 2016-10-21T10:43Z
Check the source to verify that this is the current version before use.

C.1. Scope, applicability, and purpose.

C.1.1 Scope. This Appendix establishes acoustical noise limits and prescribes testing requirements and measurement techniques for determining conformance to aural non-detectability requirements.

C.1.2 Applicability. This Appendix applies to the acquisition and product improvement of all designed, or purchased non-developmental items (NDI), ground systems, subsystems, equipment, and facilities that emit acoustic noise. This Appendix is intended to address noise levels emitted during the full range of typical operational conditions. It does not apply to aircraft that are not on the ground.

C.1.3 Purpose. This Appendix provides criteria for designing materiel having noise levels that minimize aural detection by an enemy. These criteria are based on conservative estimates of sound propagation conditions, which assume a young adult listener with normal hearing sensitivity, and very quiet background noise listening levels. See HEL TM 3-85, Proposed Aural Nondetectability Limits for Army Materiel, http://www.dtic.mil/cgi-bin/GetTRDoc?AD=ADA156704.

C.2. Documents applicable to Appendix C.

MIL-HDBK-1908	Definitions of Human Factors Terms
ANSI/ASA S1.1	Acoustical Terminology
HEL TM 3-85	Proposed Aural Nondetectability Limits for Army Materiel

(The above documents are those cited in this Appendix. For applicability and ordering information, see preambles and addresses in Section 2 of the main body of the standard.)

C.3. Definitions. Unless defined below, terms are defined per MIL-HDBK-1908. Terms not appearing in MIL-HDBK-1908, are defined per ANSI/ASA S1.1.

C.4. General requirements. Compliance with the provisions of this Appendix shall be in addition to compliance with the applicable provisions of the main body of the standard and, in the case of conflict, shall supersede the requirements of the main body.

C.5. Detailed requirements.

C.5.1 Noise limits.

C.5.1.1 Criteria. Equipment having an aural non-detectability requirement shall not exceed the limits of Tables C-I or C-II, as specified by the procuring activity. These tables provide two categories of limits (Level I and Level II). Selection is based upon the anticipated use of the equipment and the criticality of aural non-detectability.

Source: https://assist.dla.mil -- Downloaded: 2016-10-21T10:43Z
Check the source to verify that this is the current version before use.

C.5.1.1.1 Level I. Level I aural non-detectability limits (Table C-I) assume that the listener is in a quiet rural area (Table C-III) with the closest heavily used highway or community noise sources further than 4.0 km (2.5 miles (mi)) away. This limit will provide aural non-detectability under many, but not all, conditions of wind, temperature, terrain, and time of day.

NOTE: The U.S. Environmental Protection Agency (EPA) has sampled the range of noise levels in many locations in the United States from wilderness to urban centers. This limit was selected from the lower range of rural noise with limited contribution from human activity.

C.5.1.1.2 Level II. Level II aural non-detectability limits (Table C-II) assume that the listener is in the quietest background noise level (Table C-III) that is likely to be encountered in practice with the closest heavily used highway or community noise sources further than 10 km (6.2 mi) away. This limit will provide aural non-detectability under most conditions of wind, temperature, terrain, and time of day.

C.5.1.2 Maximum. Equipment noise shall not exceed the specified one-third octave band noise limits for the aural non-detectability distance at the indicated measurement distance. The limit shall be satisfied if it is not exceeded in any band at any azimuth around the equipment. The minimum distance at which non-detectability is required shall be as specified by the procuring activity. For sources that are not steady such as vehicle drive-by, the noise levels shall be taken at the closest distance which the vehicle approaches a road-side microphone. For such sources or those that are impulsive or intermittent, the noise levels shall be the highest values in each band determined separately over the course of the event. The requirements presented in Tables C-I and C-II are shown in graphical form (Figures C-1 through C-5). The graphs can be used to plot the measured system or item noise level directly on the figure, thereby determining the frequency that produces detectability, the number of decibels by which the limit is exceeded, and an approximation of the actual aural non-detectability distance of the materiel.

Source: https://assist.dla.mil -- Downloaded: 2016-10-21T10:43Z
Check the source to verify that this is the current version before use.

TABLE C-I. Level I aural non-detectability limits (dB).

One-Third Octave Band Frequency (Hz)	Non-detectability Distance (meters)																			
	5	**10**	**15**	**20**	**25**	**30**	**100**	**200**	**300**	**400**	**500**	**750**	**1,000**	**1,250**	**1,500**	**2,000**	**3,000**	**4,000**	**5,000**	**6,000**
50	48	53	56	59	61	62	62	68	71	74	66	70	73	75	76	79	84	87	90	92
63	44	50	53	56	58	59	59	65	69	71	64	68	71	73	75	78	83	87	91	94
80	44	49	53	55	57	58	60	66	69	72	65	69	72	75	77	81	87	93	97	101
100	41	46	50	52	54	56	59	65	69	72	65	70	73	77	79	84	92	99	104	107
125	37	41	45	47	49	51	58	64	69	72	65	71	76	80	83	89	98	102	105	106
160	36	39	42	44	46	48	55	63	68	72	66	73	79	84	89	93	97	99	101	102
200	41	42	45	47	49	51	52	61	67	72	68	78	82	85	87	89	92	94	96	98
250	47	44	47	49	51	53	50	61	69	76	71	76	79	80	82	83	86	89	91	93
315	44	46	47	50	52	54	50	63	71	75	68	71	73	74	75	77	81	83	86	88
400	29	43	43	45	48	50	51	62	66	68	62	64	66	67	69	71	75	78	81	84
500	26	42	47	49	51	54	54	62	64	66	55	58	60	61	63	65	70	73	77	80
630	27	37	45	49	52	54	55	63	67	68	53	56	58	60	61	64	69	74	78	82
800	30	31	37	41	44	47	54	63	66	68	54	57	59	61	63	66	72	77	82	87
1,000	25	29	33	37	40	42	50	59	63	65	54	57	60	62	64	68	74	80	86	91
1,250	23	31	32	34	37	39	42	52	57	59	54	57	60	62	65	69	76	83	90	96
1,600	22	31	32	32	33	35	36	46	51	54	52	56	59	62	64	69	78	87	95	NA
2,000	21	25	35	32	31	32	36	47	52	55	50	54	58	62	65	71	82	93	NA	NA
2,500	18	26	26	36	32	31	28	39	45	48	46	52	56	60	64	72	86	NA	NA	NA
3,150	16	21	24	27	36	34	29	40	46	50	41	47	53	59	64	74	94	NA	NA	NA
4,000	15	21	25	25	27	34	25	37	44	49	40	49	57	64	72	86	NA	NA	NA	NA
5,000	12	18	22	27	24	25	23	35	43	50	48	60	71	82	92	NA	NA	NA	NA	NA
6,300	15	20	23	25	31	30	27	40	50	58	56	73	89	NA	NA	NA	NA	NA	NA	NA
8,000	23	30	33	35	37	39	40	54	67	78	79	NA	NA	NA	NA	NA	NA	NA	NA	NA
10,000	25	31	35	37	39	42	47	64	81	96	NA	NA	NA	NA	NA	NA	NA	NA	NA	NA
	2	**2**	**2**	**2**	**2**	**2**	**10**	**10**	**10**	**10**	**30**	**30**	**30**	**30**	**30**	**30**	**30**	**30**	**30**	**30**
Measurement Distance (meters)																				

Source: https://assist.dla.mil -- Downloaded: 2016-10-21T10:43Z
Check the source to verify that this is the current version before use.

TABLE C-II. Level II aural non-detectability limits (dB).

One-Third Octave Band Frequency (Hz)	Non-detectability Distance (meters)																			
	5	**10**	**15**	**20**	**25**	**30**	**100**	**200**	**300**	**400**	**500**	**750**	**1,000**	**1,250**	**1,500**	**2,000**	**3,000**	**4,000**	**5,000**	**6,000**
50	48	53	56	59	61	62	62	68	71	74	66	70	73	75	76	79	84	87	90	92
63	41	46	50	52	54	56	55	62	65	68	60	64	67	69	71	74	79	84	87	90
80	34	39	43	45	47	49	50	56	60	62	55	59	63	65	67	71	78	83	87	91
100	30	35	38	41	43	44	48	54	58	61	54	59	62	65	68	73	81	87	93	95
125	25	29	32	35	37	38	45	52	56	60	53	59	63	67	71	77	86	90	92	94
160	24	27	31	33	35	37	44	51	56	60	55	62	68	73	77	81	86	88	90	91
200	30	32	35	37	39	41	42	51	57	62	58	67	72	75	77	79	82	84	86	87
250	38	35	37	40	42	44	41	52	60	66	62	67	70	71	72	74	77	80	82	84
315	36	37	39	41	44	46	42	55	63	66	60	63	65	66	67	69	72	75	78	80
400	20	34	34	37	39	41	42	53	57	59	53	55	57	59	60	62	66	69	72	75
500	17	33	37	40	42	45	45	52	55	57	46	49	51	52	54	56	61	64	68	71
630	17	27	35	39	42	44	45	53	57	58	43	46	48	50	51	54	59	64	68	72
800	20	21	27	31	34	37	44	53	56	58	44	47	49	51	53	56	62	67	72	77
1,000	15	19	23	27	30	32	40	49	53	55	44	47	50	52	54	58	64	70	76	81
1,250	13	21	22	24	27	29	32	42	47	49	44	47	50	52	55	59	66	73	80	86
1,600	13	22	23	23	24	26	27	37	42	45	43	47	50	53	55	60	69	78	86	94
2,000	12	16	26	23	22	23	27	38	43	46	41	45	49	53	56	62	73	84	94	NA
2,500	10	18	18	28	24	23	20	31	37	40	38	44	48	52	56	64	78	92	NA	NA
3,150	8	13	16	19	28	26	21	32	38	42	33	39	45	51	56	66	86	NA	NA	NA
4,000	8	14	18	18	20	27	18	30	37	42	33	42	50	57	65	79	NA	NA	NA	NA
5,000	7	13	16	21	19	20	18	30	38	44	43	55	66	77	87	NA	NA	NA	NA	NA
6,300	15	20	23	25	31	30	27	40	50	58	56	73	89	NA	NA	NA	NA	NA	NA	NA
8,000	23	30	33	35	37	39	40	54	67	78	79	NA	NA	NA	NA	NA	NA	NA	NA	NA
10,000	25	31	35	37	39	42	47	64	81	96	NA	NA	NA	NA	NA	NA	NA	NA	NA	NA
	2	**2**	**2**	**2**	**2**	**2**	**10**	**10**	**10**	**10**	**30**	**30**	**30**	**30**	**30**	**30**	**30**	**30**	**30**	**30**
Measurement Distance (meters)																				

Source: https://assist.dla.mil -- Downloaded: 2016-10-21T10:43Z
Check the source to verify that this is the current version before use.

TABLE C-III. Frequency (Hz) and accompanying one-third octave band ambient noise levels (dB) for both Level I and Level II categories.

Frequency (Hz)	Level I – Rural Area Ambient Noise Level (dB)	Level II – Quietest Area* Ambient Noise Level (dB)
50	34	29
63	37	29
80	38	28
100	38	26
125	37	24
160	34	23
200	31	21
250	28	19
315	26	18
400	25	16
500	24	15
630	24	14
800	23	13
1000	22	12
1250	21	11
1600	19	10
2000	18	9
2500	16	8
3150	15	7
4000	14	7
5000	12	6
6300	10	6
8000	9	6
10000	8	6

*Quietest Area is defined as wilderness noise conditions isolated from human activity.

Source: https://assist.dla.mil -- Downloaded: 2016-10-21T10:43Z
Check the source to verify that this is the current version before use.

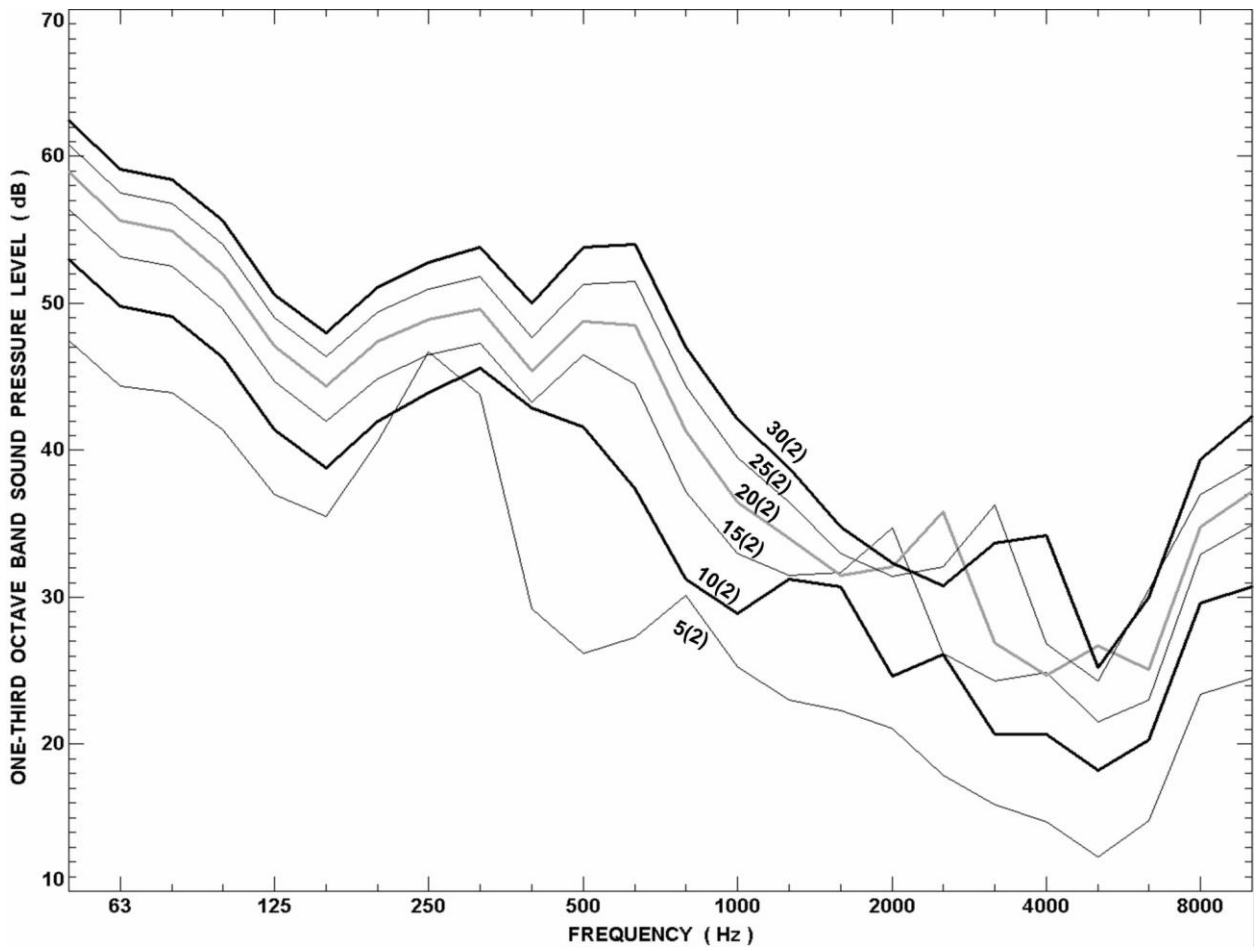

Note: The number in parentheses is the measurement distance in meters.

FIGURE C-1. Level I aural non-detectability limits for 5 – 30 meters.

Source: https://assist.dla.mil -- Downloaded: 2016-10-21T10:43Z
Check the source to verify that this is the current version before use.

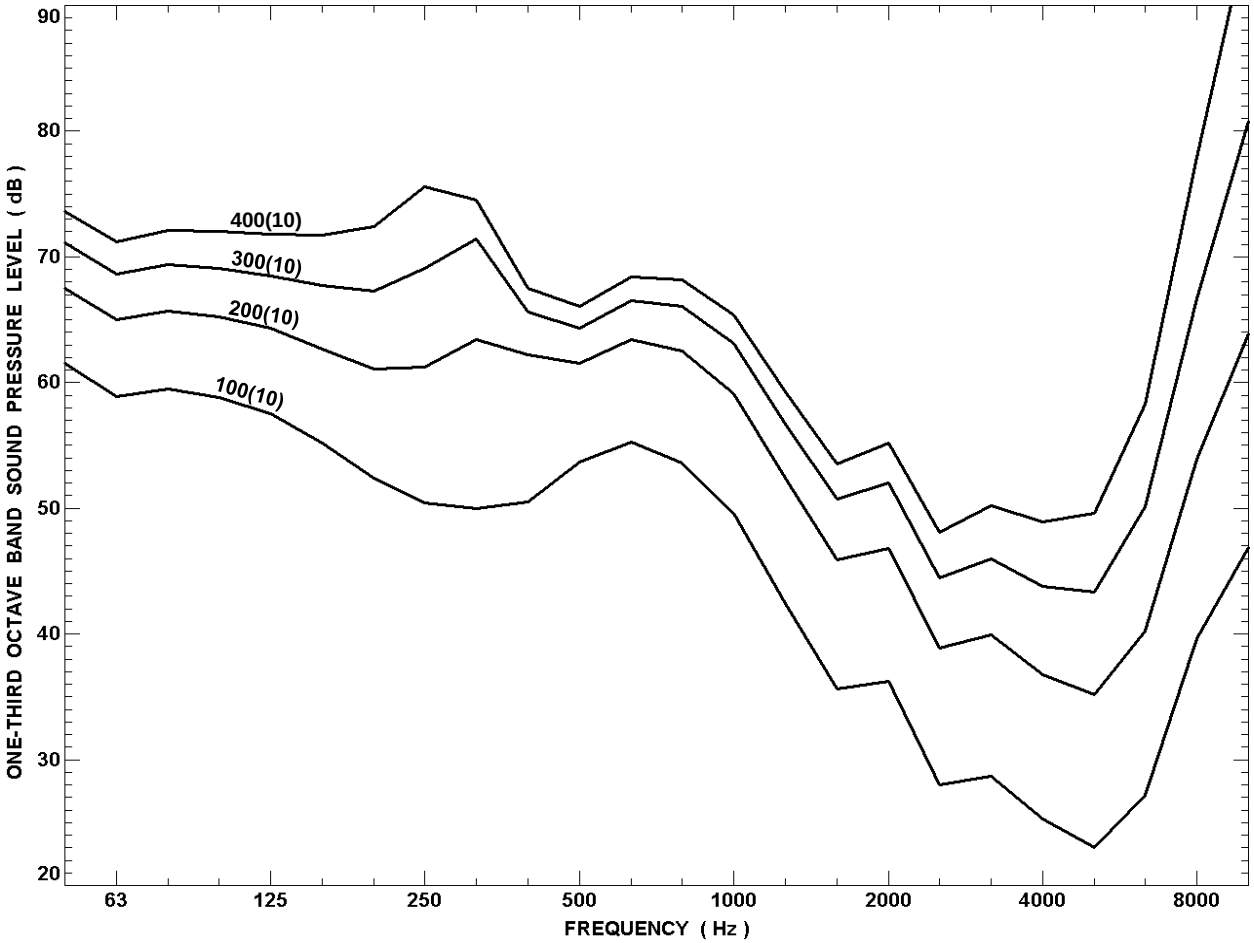

Note: The number in parentheses is the measurement distance in meters.

FIGURE C-2. Level I aural non-detectability limits for 100 – 400 meters.

Source: https://assist.dla.mil -- Downloaded: 2016-10-21T10:43Z
Check the source to verify that this is the current version before use.

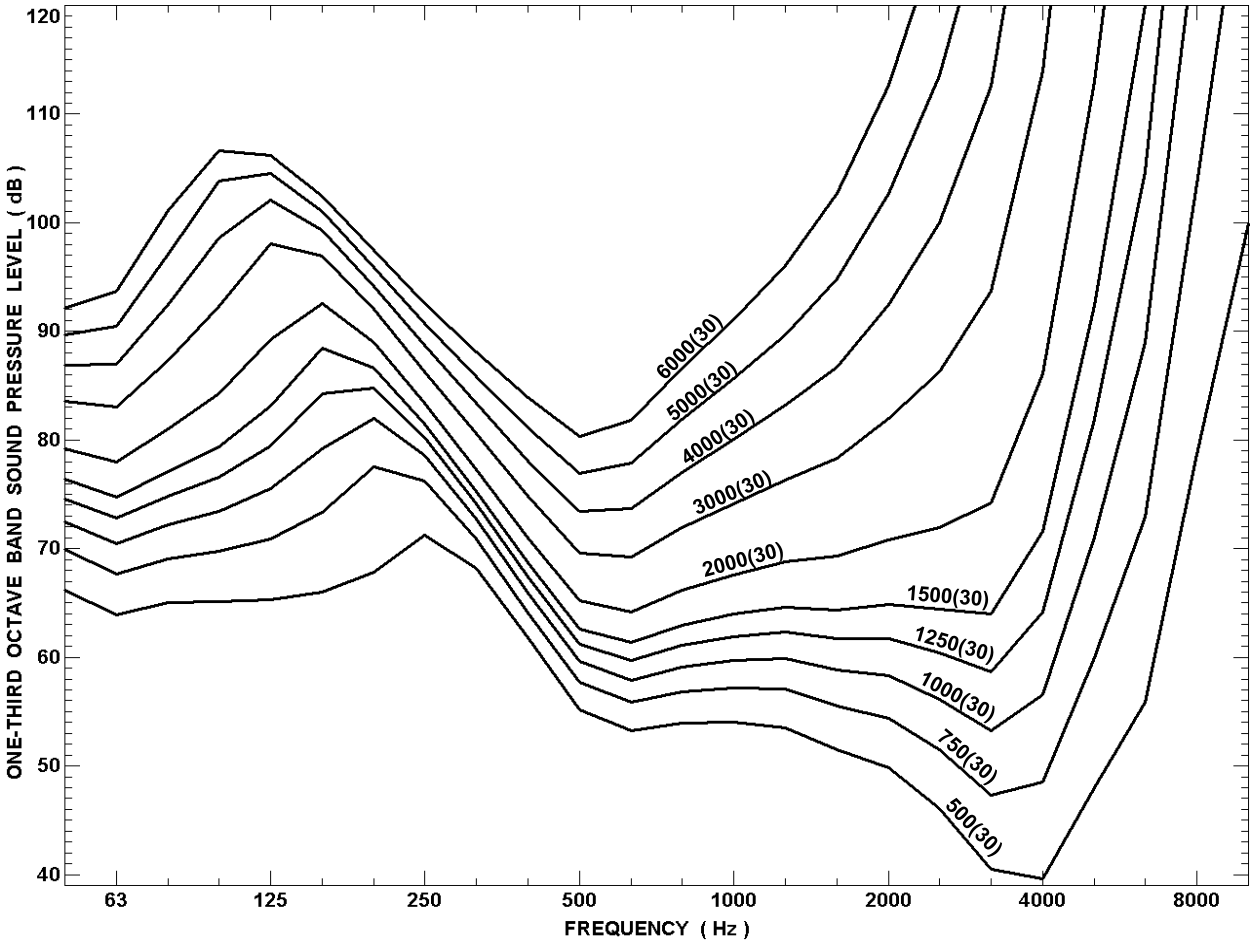

Note: The number in parentheses is the measurement distance in meters

FIGURE C-3. Level I aural non-detectability limits for 500 – 6,000 meters.

Source: https://assist.dla.mil -- Downloaded: 2016-10-21T10:43Z
Check the source to verify that this is the current version before use.

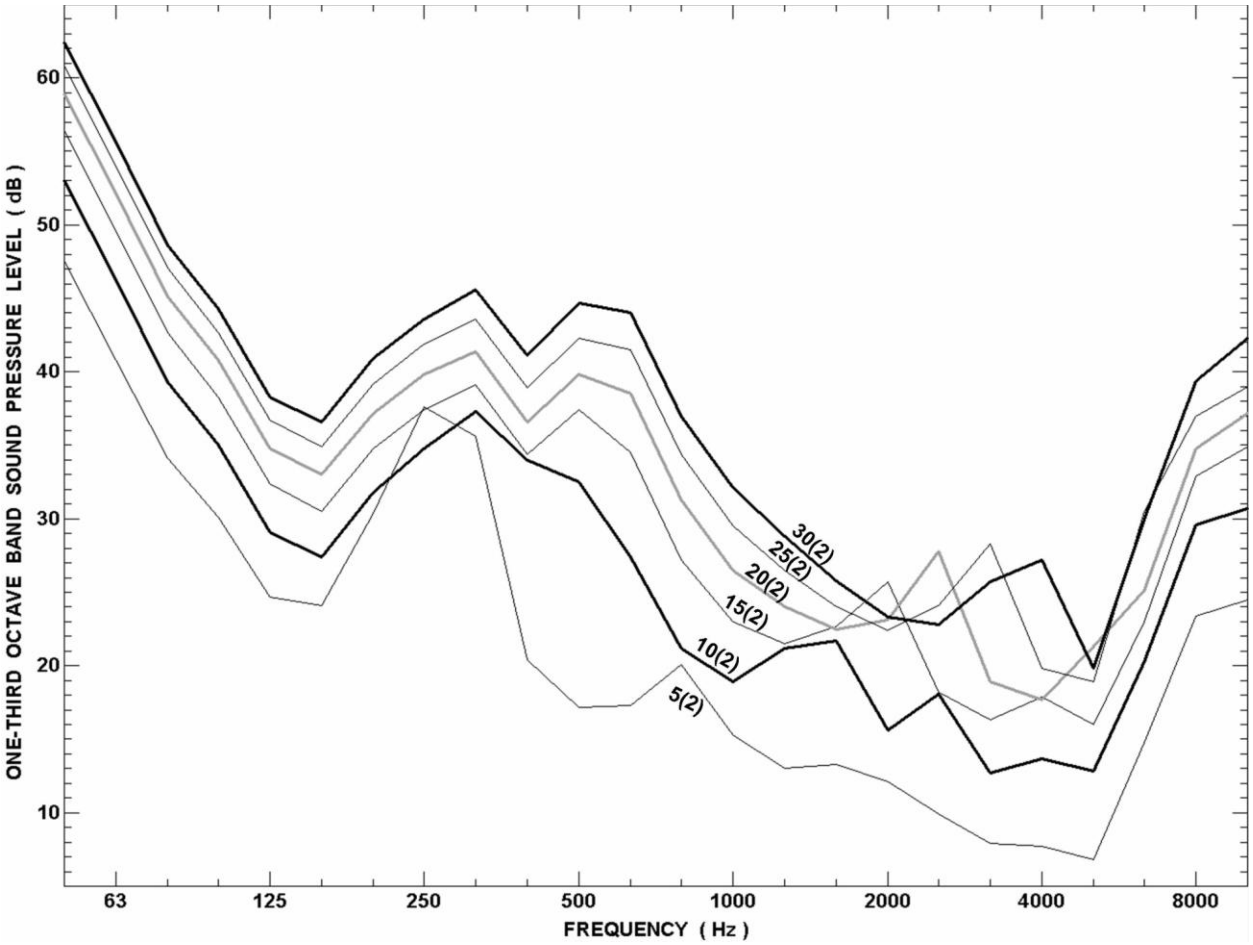

Note: The number in parentheses is the measurement distance in meters.

FIGURE C-4. Level II aural non-detectability limits for 5 – 30 meters.

Source: https://assist.dla.mil -- Downloaded: 2016-10-21T10:43Z
Check the source to verify that this is the current version before use.

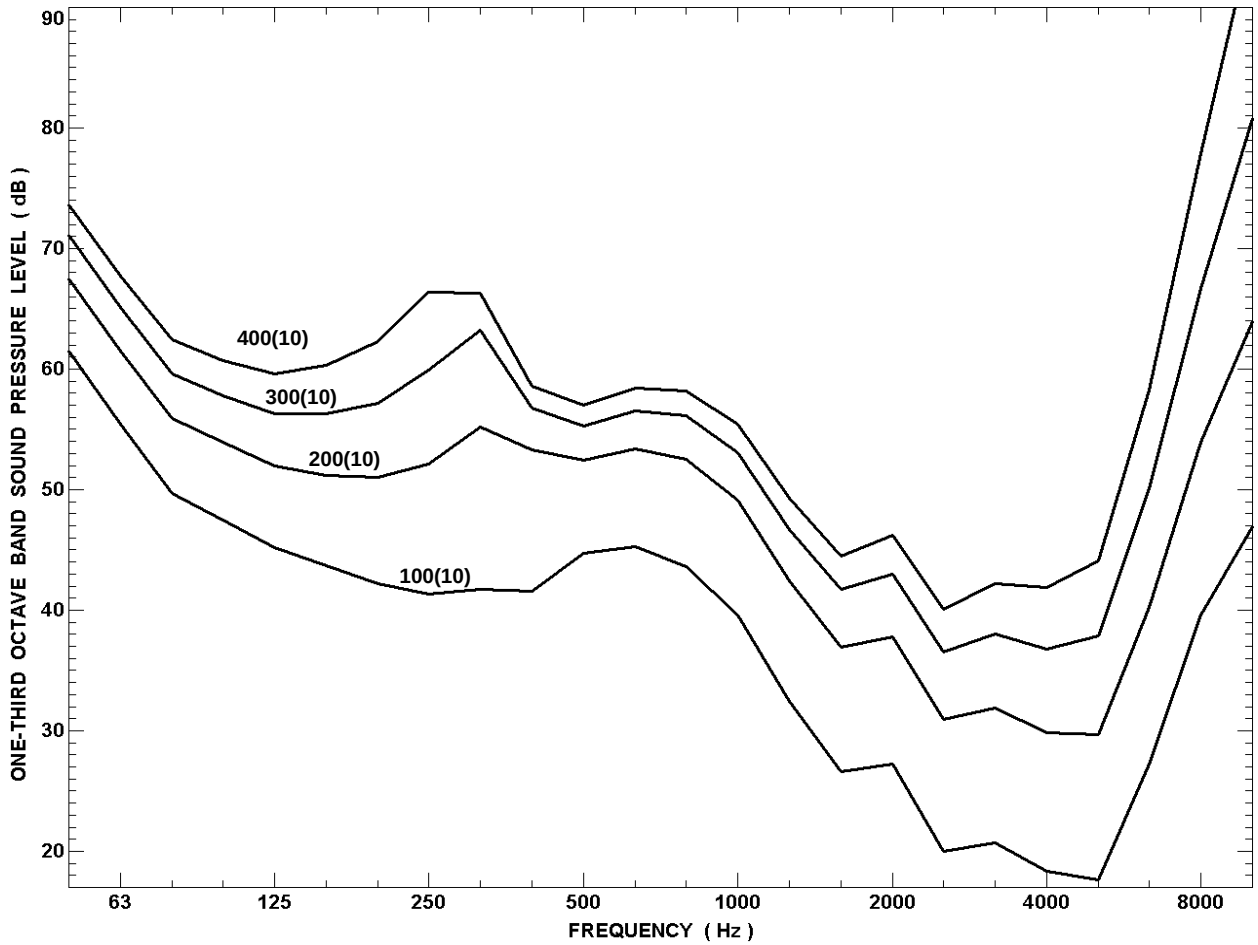

Note: The number in parentheses is the measurement distance in meters.

FIGURE C-5. Level II aural non-detectability limits for 100 – 400 meters.

C.5.2. Test requirements.

C.5.2.1 Equipment operating conditions. Equipment operating conditions will depend upon the conditions for which aural non-detectability is required and shall be specified by the procuring activity.

C.5.2.2 Measurements. Reported measurement values shall be the maximum indication using the root-mean-square detection mode and fast exponential-time-averaging characteristics (125-ms time constant) of a sound level meter, or equivalent.

C.6. Notes.

C.6.1 Intended use. This Appendix is intended for use as an aural non-detectability design standard for military ground materiel, cited contractually in system specifications, and

Source: https://assist.dla.mil -- Downloaded: 2016-10-21T10:43Z
Check the source to verify that this is the current version before use.

elsewhere, and for use as a basis for that part of noise testing where design characteristics are assessed for purposes of acceptance. It is not intended for use to express binding requirements in conceptual and other early acquisition phases. The Appendix may be applied to traditional, as well as non-developmental item acquisitions.

C.6.2 Details specified by the procuring activity. Applicable details, such as the following, should be specified by the procuring activity in the request for proposal (RFP) and in appropriate follow-up requirements documentation.

a. Limit category (see C.5.1.1).
b. The minimum distance at which non-detectability is required (see C.5.1.2).
c. Equipment operating conditions for test (see C.5.2.1).

C.6.3 Information to the development test agency. Developing agencies should make appropriate information available to the development test agency, as required, to ensure that test conditions, noise category selection, and evaluation of results are consistent with system requirements, specified hearing protection requirements, if any, and general procuring activity-specified requirements relevant to the provisions of this Appendix.

Source: https://assist.dla.mil -- Downloaded: 2016-10-21T10:43Z
Check the source to verify that this is the current version before use.

This page intentionally left blank.

Source: https://assist.dla.mil -- Downloaded: 2016-10-21T10:43Z
Check the source to verify that this is the current version before use.

APPENDIX D

AIRCRAFT NOISE REQUIREMENTS

TABLE OF CONTENTS

PARAGRAPH PAGE

D.1 Scope, applicability, and purpose 71
D.1.1 Scope 71
D.1.2 Applicability 71
D.1.3 Purpose 71

D.2 Documents applicable to Appendix D 71

D.3 Definitions 72
D.3.1 Acoustical treatment 72
D.3.2 Aircraft 72

D.4 General requirements 72
D.4.1 Compliance with main body of standard 72
D.4.2 Hearing damage risk 72
D.4.3 Communications risk 72
D.4.4 Criteria 73
D.4.4.1 System considerations 73
D.4.4.2 Impulsive noise hearing damage criteria 73
D.4.4.3 Noise hazards (hearing damage criteria) 74
D.4.5 Measurements 76
D.4.5.1 Configurations 76
D.4.5.2 Operating conditions 77
D.4.5.3 Measurement locations 78
D.4.5.4 Procedures, methods, and techniques 79
D.4.5.5 Duration 81
D.4.5.6 External influences 81

Source: https://assist.dla.mil -- Downloaded: 2016-10-21T10:43Z
Check the source to verify that this is the current version before use.

D.4.6 Hazard signs (interior) 81

D.5 Detailed requirements by aircraft type 81
D.5.1 Propeller driven, fixed-wing aircraft and unmanned aerial systems 81
D.5.1.1 Flight, external noise 81
D.5.1.2 Flight, internal noise 81
D.5.1.3 Ground personnel noise exposure 82
D.5.2 Jet driven, fixed-wing aircraft and unmanned aerial systems 82
D.5.2.1 Flight, external noise 82
D.5.2.2 Flight, internal noise 82
D.5.2.3 Ground personnel noise exposure 82
D.5.3 Vertical or short take-off and landing aircraft and unmanned aerial systems 83
D.5.3.1 Flight, external noise 83
D.5.3.2 Flight, internal noise 83
D.5.3.3 Ground personnel noise exposure 83
D.5.4 Rotary-wing aircraft and unmanned aerial systems 83
D.5.4.1 Measurements for initial qualification 83
D.5.4.2 Subsystems 85

D.6 Notes 85
D.6.1 Intended use 85
D.6.2 Details specified by the procuring activity 85

Source: https://assist.dla.mil -- Downloaded: 2016-10-21T10:43Z
Check the source to verify that this is the current version before use.

D.1. Scope, applicability, and purpose.

D.1.1 Scope. This Appendix establishes acoustical noise limits and prescribes testing requirements and measurement techniques for determining conformance to noise limits in personnel-occupied areas for all types of Department of Defense (DoD) aircraft, including unmanned aerial systems. The intent of this Appendix is that all occupied spaces aboard DoD aircraft, and all ground and shipboard outside work spaces where personnel may be present in the vicinity of where DoD aircraft are operated, have suitable sound pressure levels consistent with a safe acoustic working environment. This Appendix also defines the consideration of operating procedures, hearing protection and communications equipment assigned to personnel working in these noise environments.

D.1.2 Applicability. This Appendix applies to all DoD developed or modified fixed- and rotary-wing aircraft. It also applies to commercial off-the-shelf (COTS) and COTS-derivative aircraft that are procured and/or used by DoD. It applies to all systems, subsystems, component hardware, and support equipment which can contribute to the noise within personnel occupied areas during aircraft operation and maintenance.

D.1.3 Purpose. This Appendix provides criteria for testing and determination of allowable noise produced by aircraft developed, modified, or procured by DoD. Use of these criteria will:

a. Provide accurate and sufficient information needed to determine or verify whether hazardous noise conditions will be produced in aircraft interiors or nearby exterior spaces,

b. Provide accurate and sufficient information needed to determine or verify whether flight and/or ground personnel communication is impaired by the noise produced by the aircraft,

c. Support early and accurate consideration of, and investment in, noise design features affecting personnel safety in trade-off studies against other aircraft features or attributes,

d. Support early development of effective noise control solutions, if needed, and

e. Support development of improved personal hearing protection and communication equipment, if needed.

D.2. Documents applicable to Appendix D.

DODD 4715.1	Environmental, Safety, and Occupational Health (ESOH)
DODI 5000.02	Operation of the Defense Acquisition System
DODI 6055.12	Hearing Conservation Program (HCP)
MIL-HDBK-1908	Definitions of Human Factors Terms
ANSI/ASA S1.1	Acoustical Terminology
ANSI/ASA S1.4	American National Standard Electroacoustics – Sound Level Meters – Part 1: Specifications

Source: https://assist.dla.mil -- Downloaded: 2016-10-21T10:43Z
Check the source to verify that this is the current version before use.

ANSI/ASA S1.6	Preferred Frequencies, Frequency Levels, and Band Numbers for Acoustical Measurements
ANSI/ASA S1.11, Part 1	Electroacoustics – Octave-Band and Fractional-Octave-Band Analog and Digital Filters – Part 1: Specifications
ANSI/ASA S12.75	Methods for the Measurement of Noise Emissions from High Performance Military Jet Aircraft
SAE J184	Qualifying a Sound Data Acquisition System

(The above documents are those cited in this Appendix. For applicability and ordering information, see preambles and addresses in Section 2 of the main body of the standard.)

D.3. Definitions. Unless defined below, terms are defined per MIL-HDBK-1908. Terms not appearing in MIL-HDBK-1908, are defined per ANSI/ASA S1.1.

D.3.1 Acoustical treatment. As used in this Appendix, acoustical treatment includes thermal insulation.

D.3.2 Aircraft. As used in this Appendix, aircraft is a generic term that includes fixed-wing aircraft, rotary-wing aircraft, short take-off and landing (STOL) aircraft, vertical take-off and landing (VTOL) aircraft, short take-off and vertical landing (STOVL), tilt-rotor aircraft, and unmanned aerial systems.

D.4. General requirements.

D.4.1 Compliance with main body of standard. Compliance with the provisions of this Appendix shall be in addition to compliance with the applicable provisions of the main body of the standard and, in the case of conflict, shall supersede the requirements of the main body.

D.4.2 Hearing damage risk. Sound pressure levels produced by all DoD aircraft shall be limited to such a level that all personnel-occupied spaces in and around the aircraft are maintained at levels defined in this Appendix. Should operating noise emissions of DoD aircraft be of such a level and duration that currently issued hearing protection systems and operating procedures do not allow a safe work environment, the procuring activity shall be alerted as early in the development process as is feasible in accordance with the requirements of Department of Defense Directive (DODD) 4715.1, Department of Defense Instruction (DODI) 5000.02, and DODI 6055.12.

D.4.3 Communications risk. Noise from operation of DoD aircraft may interfere with communication between aircraft operators and crew, and ground crew. Producers of DoD aircraft shall determine the ability of aircraft and ground crew members to communicate safely during the various modes of operation of the aircraft, and ensure that adequate communication equipment and procedures are provided allowing all crewpersons to effectively communicate all information associated with the work location and function to which they have been assigned.

Source: https://assist.dla.mil -- Downloaded: 2016-10-21T10:43Z
Check the source to verify that this is the current version before use.

Should communications at work locations not be possible during all modes of operation, the procuring activity shall be alerted as early in the development process as is feasible in accordance with the requirements of DODD 4715.1, DODI 5000.02, and DODI 6055.12.

D.4.4 Criteria.

D.4.4.1 System considerations.

D.4.4.1.1 Subsystems. All aircraft subsystems which are to be normally operated in flight continuously for more than five (5) minutes per hour shall be selected and integrated so that the noise produced by the entire system in flight does not exceed the limits of this Appendix. Aircraft subsystems shall include, but not be limited to, the rotor(s), drive train, on-board auxiliary power unit (APU), and accessory equipment such as environmental control units, hydraulic pump systems, avionics, transformers, blowers, and fans. Additionally, other noise generating sources (e.g., fluid flow devices and systems, environmental control systems, air moving systems, and contributing subsystems such as duct noise), electrical and electronic equipment (e.g., induction noise), and non-moving items that can be mechanically induced to vibrate shall be included.

D.4.4.1.2 Government furnished equipment (GFE). The provisions of this Appendix shall apply to system sound pressure levels including all GFE-produced noise. The fact that a subsystem or component which contributes to the sound pressure levels may be GFE shall not eliminate the requirement that the total system noise conform to this Appendix. Where required, acoustic information on such systems shall be obtained from the procuring activity.

D.4.4.1.3 Mission profiles. Every DoD aircraft is optimized for durability, performance, and life cycle cost parameters as it is operated to perform predefined “missions.” The acquisition program definitions of intended aircraft operation including such parameters as power settings, gross weight, weapons load, crew and passenger make-up, and flight conditions are defined in this Appendix as “mission profiles.” Analyses of noise produced by aircraft operations shall be performed for each mission profile identified and for all flight crew, mission crew, passengers, and ground crew members. Each mission profile is composed of specific mission segments, e.g., take-off, landing, refueling. Each mission segment and associated noise exposure shall be considered for each mission profile.

D.4.4.2 Impulsive noise hearing damage criteria.

D.4.4.2.1 Aircraft related exposures. Aircraft related personnel impulsive noise exposure shall be in accordance with Appendix B of this standard. Normal aircraft related impulsive noise sources include but are not limited to gun firing, missile launches, sonobuoy drops, canopy cutting with detonation cord, emergency egress cutting with detonation cord for structures other than the canopy, canopy or door jettison, and ejection seat rocket motor.

D.4.4.2.2 Impulsive noise non-auditory effects criteria. Aircraft related impulsive noise shall not exceed 195 dB peak unless specific analysis is conducted to assess the risk of blast lung

Source: https://assist.dla.mil -- Downloaded: 2016-10-21T10:43Z
Check the source to verify that this is the current version before use.

(and other internal organ) injury. The impulse shall be measured using three orthogonal pressure probes and the vector sum of the three probes shall be used to assess compliance with this requirement.

D.4.4.3 Noise hazards (hearing damage criteria). This requirement, including the subordinate paragraphs, supersedes 4.2.3.1.

D.4.4.3.1 Total daily exposure. The total daily exposure (TDE) allocated to a noise producing system or subsystem shall be specified by the procuring activity, but shall not exceed 1.0 (100% of the allowable noise dose) for the worst nominal duty day (a duty day encompasses 24 hours and occurs at least once per month). The limit should be reduced to reflect contributions from other noise sources in the intended environment. The sum of the TDEs for all systems and subsystems shall not exceed the TDE of the overall system.

D.4.4.3.2 Total daily exposure calculation. The TDE shall be calculated using either Equation 1a, 1b, or 1c using consistent units of time.

$$TDE = \sum_{i=1}^{n} \frac{T_i}{T_{base}} * 2^{\left(L_{A_i}-85\right)/3} \qquad \text{(Equation 1a)}$$

$$TDE = \sum_{i=1}^{n} \frac{T_i}{T_{i_{max}}} \qquad \text{(Equation 1b)}$$

$$TDE = \sum_{i=1}^{n} D_i \qquad \text{(Equation 1c)}$$

D.4.4.3.3 Noise exposure dose. The noise exposure dose shall be calculated using Equation 2.

$$D_i = \frac{T_i}{T_{base}} * 2^{\left(L_{A_i}-85\right)/3} \qquad \text{(Equation 2)}$$

where

$i \equiv$ individual noise exposure segment

$n \equiv$ total number of noise exposure segments in the worst nominal duty day

T_{base} = 8 hours = 480 minutes = 28,800 seconds

$T_i \equiv$ exposure time for noise exposure segment i

$L_{Ai} \equiv$ A-weighted sound pressure level (dBA) at the ears for the noise exposure segment

$T_{i_{max}} \equiv$ maximum allowable duration for noise exposure segment i, at sound pressure level L_{Ai}

$D_i \equiv$ dose for noise exposure segment i

Source: https://assist.dla.mil -- Downloaded: 2016-10-21T10:43Z
Check the source to verify that this is the current version before use.

D.4.4.3.4 Time weighted average sound pressure level. The TWA SPL shall be calculated using Equation 3.

$$L_{eq8} = 85 + 10 * log10\ (TDE) \qquad \text{(Equation 3)}$$

D.4.4.3.5 Equivalent noise exposure times. Times corresponding to a given sound pressure level are shown in Table D-I. The limiting duration of exposure at any continuous sound pressure level can also be determined from equations 4a, 4b, or 4c. These times assume that exposures are followed by periods of equal length in quiet (less than or equal to 70 dBA).

TABLE D-I. Steady-state noise exposure limits.

L_A	Allowable Time		L_A	Allowable Time		L_A	Allowable Time	
(dBA)	(hours)	(minutes)	(dBA)	(hours)	(minutes)	(dBA)	(minutes)	(seconds)
≤ 80	24.0	1440	97	0.50	30.0	114	0.59	35.4
81	20.2	1210	98	0.40	23.8	115	0.47	28.1
82	16.0	960	99	0.31	18.9	116	0.37	22.3
83	12.7	762	100	0.25	15.0	117	0.30	17.7
84	10.1	605	101	0.20	11.9	118	0.23	14.1
85	8.0	480	102	0.16	9.4	119	0.19	11.2
86	6.3	381	103	0.13	7.5	120	0.15	8.9
87	5.0	302	104	0.10	6.0	121	0.12	7.0
88	4.0	240	105	0.08	4.7	122	0.09	5.6
89	3.2	190	106	0.06	3.8	123	0.07	4.4
90	2.5	151	107	0.05	3.0	124	0.06	3.5
91	2.0	120	108	0.04	2.4	125	0.05	2.8
92	1.6	95	109	0.03	1.9	126	0.04	2.2
93	1.3	76	110	0.02	1.5	127	0.03	1.8
94	1.0	60	111	0.02	1.2	128	0.02	1.4
95	0.8	48	112	0.02	0.9	129	0.02	1.1
96	0.6	38	113	0.01	0.7	130	0.01	0.9

Time (hours): $T_{max} = 8 \text{ x } 2^{(85-L_A)/3}$ (Equation 4a)

Time (minutes): $T_{max} = 480 \text{ x } 2^{(85-L_A)/3}$ (Equation 4b)

Time (seconds): $T_{max} = 28{,}800 \text{ x } 2^{(85-L_A)/3}$ (Equation 4c)

Source: https://assist.dla.mil -- Downloaded: 2016-10-21T10:43Z
Check the source to verify that this is the current version before use.

where L_A = A-weighted sound pressure level at the ears,
T_{max} = maximum allowable duration at sound pressure level L_A.

D.4.4.3.6 Frequency range. Total daily exposure shall be based on the one-third octave band center frequency range of 25 Hz to 10 kHz. Noise above this range should not cause hearing damage. Total daily exposure when hearing protection is used shall be based on the octave band center frequency range of 63 Hz to 8,000 Hz.

D.4.4.3.7 Noise limits for passenger compartments in commercial derivative aircraft. Sound pressure levels in passenger compartments in COTS-derivative aircraft shall not exceed the sound pressure levels of the passenger compartments of the commercial variant, or 85 dBA, whichever is higher.

D.4.5 Measurements. The following provisions define the sound pressure level measurements, measurement techniques, and aircraft operating conditions which are to be used to measure the aircraft's noise for compliance. These measurement techniques and operating conditions should be followed rigorously to ensure uniformity of measurement from one measurement facility to another, and from one aircraft configuration to another. Measurement of actual sound pressure levels is necessary to verify compliance with the Appendix. Measurements shall be performed at the mission areas and flight conditions of the mission profiles. Hazardous areas around aircraft must be characterized so that personnel can be informed as to when hearing protection is needed. Noise measurements shall be taken to define or estimate the 85 dBA and 100 dBA contour lines or the A-weighted levels at a 250-foot radius circle at no greater than 30° spacing around the aircraft, corresponding to the range at which hearing protection is required, and at which single hearing protection may be insufficient.

D.4.5.1 Configurations. Noise measurements shall be made on the first completely configured production representative aircraft. Frequently, environmental regulations require noise data prior to the flight test of a completely production representative plane. In these instances, a pre-production prototype may be tested as the "best available." However, measuring a pre-production aircraft does not remove the requirement for noise measurements on a production representative aircraft, airframe, and engine(s). When modifications may influence sound pressure levels at flight member locations, additional noise measurements shall be taken.

D.4.5.1.1 Lot acceptance and quality assurance. Aircraft interior sound pressure levels are highly dependent on the integrity of the noise control or sound attenuating treatments, and manufacturing variations in power plants and transmissions. Removal and reinstallation of interior sound attenuating material and trim can degrade the interior noise environment. To minimize interior noise variation among a given type/model/series, a subset of the measurements made during Initial Qualification testing shall be made for each aircraft manufactured. These measurements shall be repeated whenever the noise generating or noise control elements are replaced or removed to ensure that interior noise does not vary over the life of the aircraft. Operating configurations, steady state flight conditions, and loadings expected to yield the most repeatable results shall be designated by the procuring activity for Lot Acceptance and Quality Assurance measurement. These should include the clean external configuration (no external

Source: https://assist.dla.mil -- Downloaded: 2016-10-21T10:43Z
Check the source to verify that this is the current version before use.

stores). Overall and octave band sound pressure levels for Lot Acceptance and Quality Assurance shall be within 3 dB of measurements made during Initial Qualification testing for the corresponding configuration, condition, loading and location.

D.4.5.1.2 Acoustic and thermal treatments. If the aircraft design may be provided to the end user with a variety of acoustic and thermal treatments, or should such treatments be removable by the end user, noise testing and analysis shall be performed both with all treatments removed and with all treatments installed.

D.4.5.1.3 Test sample. Noise measurements shall be performed on an adequate number of production configured aircraft as early as possible in the development cycle. The number of test aircraft shall be determined jointly by the procuring activity and the contractor.

D.4.5.2 Operating conditions.

D.4.5.2.1 Flight operation.

D.4.5.2.1.1 Internal noise. Normal operating conditions shall include the following and any others specified by the procuring activity.

a. Taxi,
b. Take-off,
c. Climb to cruise altitude,
d. Level flight at maximum speed or maximum continuous power,
e. Normal descent,
f. Normal landing,
g. Level flight at maximum range, speed, and altitude,
h. Level flight at maximum endurance, speed, and altitude,
i. Rapid climb between several altitude ranges,
j. Rapid descent between several altitude ranges,
k. Touch and go landings,
l. Normal turns (low G), and
m. Tight turns (high G).

D.4.5.2.1.2 External noise. Operating conditions for external noise shall be in accordance with ANSI/ASA S12.75.

D.4.5.2.2 Ground operation. The aircraft shall be on the ground and operating under normal pre-flight conditions, including:

a. Engines off, auxiliary power unit (APU) operating (if so equipped),
b. Engines idle, APU operating (if so equipped),

Source: https://assist.dla.mil -- Downloaded: 2016-10-21T10:43Z
Check the source to verify that this is the current version before use.

c. Engines idle, APU off, and

d. Brakes locked, engines at maximum power, without forward, lateral, or vertical movement.

D.4.5.2.3 Mission equipment. Equipment shall be operated under normal energized operating conditions including sufficient warm-up time to reach normal operating temperature. Multiple speed equipment shall be measured at each operating speed. Variable speed equipment shall be operated at maximum, ½, and minimum speed (5 percent of maximum if equipment can not be operated down to zero speed). Equipment pumps and fans shall be operating during measurements. Background measurements shall be made with the equipment not operating for each microphone and location under the normal environmental conditions that will be present when the equipment noise measurements are obtained.

D.4.5.2.4 Auxiliary equipment. All auxiliary systems used for each designated flight mode shall be in operation during the measurement. Auxiliary equipment shall be oriented in its normal installation position.

D.4.5.2.5 Subsystems. Since passenger and crew noise exposure may be dominated by aircraft subsystems (e.g., ventilation system, auxiliary power units), noise tests shall include all possible sources.

D.4.5.2.6 Special operation. Emergency conditions without impulsive noise shall not be measured, unless specified as part of a training profile. Operating modes specific to mission equipment (e.g., payout/streaming and recovery of towed devices) shall be measured separately.

D.4.5.2.7 Transients. Transients and other non-impulsive conditions of less than 3 second duration shall be excluded.

D.4.5.3 Measurement locations.

D.4.5.3.1 Exterior. The sound pressure level shall be measured or estimated at the head position of all ground crew, aircraft maintainer, and operations personnel at all normal aircraft operating conditions that occur in the vicinity of ground crew.

D.4.5.3.1.1 Near field (maintenance). Specific locations within a circle encompassing the aircraft shall be characterized by direct measurements at locations where personnel can be expected to spend at least 5 minutes.

D.4.5.3.1.2 Danger area (contours). Measurements shall be made at the closer of 250 feet or the estimated 85 dBA distance[1] from the microphone array reference point, at angular increments not greater than 30°, including the nose. The microphone array reference point shall be located at the intersection of the aircraft centerline and an easily identifiable feature. Additionally, measurements in each angular direction are recommended. Similarity among locations may be used to reduce measurement locations to one half of the aircraft, based on geometric symmetry[2] and proximity to identical noise sources, e.g., engines on each wing.

Source: https://assist.dla.mil -- Downloaded: 2016-10-21T10:43Z
Check the source to verify that this is the current version before use.

Notes:

1 Care must be exercised to ensure that aircraft induced air movement (e.g., propwash or rotorwash) does not contaminate the measurements.

2 The noise field from most rotary-wing aircraft is not symmetric.

D.4.5.3.1.3 Far field (community). Locations for far field noise, from ground based operation and flyovers, shall be in accordance with ANSI/ASA S12.75.

D.4.5.3.2 Interior. Noise shall be characterized at the head positions of seated and standing crew stations, passenger stations, and any other habitable area, including lavatories. Unless the location must be occupied to operate the noise source, measurements shall be made with the crew member or passenger absent and at a center of head location. Sound pressure levels shall also be measured at the typical position of an operator's head if the equipment has an operator position associated with it. Measurements at every habitable seated and standing location may be impractical for aircraft with many compartments. Qualification by similarity among locations may be assumed based on geometric symmetry and proximity to identical noise sources, e.g., engines on each wing. Outboard locations should be included to capture aerodynamic noise.

D.4.5.3.2.1 Flight crew positions. Measurements shall be made at every flight station, unless symmetry indicates similarity.

D.4.5.3.2.2 Mission crew positions. Measurements shall be made at a representative number of mission crew stations spanning each mission compartment.

D.4.5.3.2.3 Passengers and troops. Measurements shall be made at a representative number of passenger stations, spanning the length and width of each passenger compartment.

D.4.5.3.2.4 Rest and sleeping areas. Measurements shall be made at every crew rest station unless symmetry indicates similarity.

D.4.5.3.2.5 Other habitable locations. Noise measurements shall be made at the head locations where personnel are expected to spend the most time (e.g., in front of galley sink or above the lavatory commode).

D.4.5.4 Procedures, methods, and techniques.

D.4.5.4.1 Microphone orientation. During each measurement, the microphone shall be oriented vertically with the diaphragm in the horizontal plane, facing either up or down. If the microphone must be attached directly to a handheld sound level meter, the microphone orientation shall be the same as that appropriate to the microphone on a cable.

D.4.5.4.2 Unoccupied locations. Unoccupied locations may be measured using either fixed or handheld microphones.

Source: https://assist.dla.mil -- Downloaded: 2016-10-21T10:43Z
Check the source to verify that this is the current version before use.

D.4.5.4.2.1 Interior. Handheld microphones and spatial averaging techniques shall be used whenever possible to avoid effects from standing waves. (See 4.7.3.2.2.2 when head location is within 30 cm (12 in) of a surface.)

D.4.5.4.2.2 Exterior. Noise outside aircraft on the ground and in flight shall be measured in accordance with ANSI/ASA S12.75, unless otherwise specified in this Appendix. Although ANSI/ASA S12.75 is written to address supersonic high performance jet aircraft, the techniques are generally applicable to all military aircraft. Either fixed or handheld microphones may be used. Spatial averaging is not required for handheld microphones.

D.4.5.4.2.3 Seated positions. Microphones shall be located along the seat centerline, at a seated head height representative of the intended population, or as specified in Table II, 15 ± 2.5 cm (6.0 ± 1.0 in) forward of the headrest or seat back. If the seat includes padding or other compressible materials, the height measured above the uncompressed surface shall be reduced by the amount of deformation caused by a median weight occupant, approximately 2.5-5.0 cm (1-2 in).

D.4.5.4.2.4 Standing positions. Standing locations shall always be measured in the absence of personnel, at a height specified in Table II.

D.4.5.4.2.5 Sleeping positions. Measurements shall be made at the resting position of the crew member's head, with the crew member not present. The microphone shall be placed 15 ± 2.5 cm (6.0 ± 1.0 in) above the mattress or headrest. If the head position is close to a wall, the microphone shall be not less than 15 cm (6.0 in) from that wall.

D.4.5.4.3 Occupied locations. Occupied locations may be measured using transducers mounted on the crew member, seat, or to nearby structures. To ensure repeatable measurements, handheld microphones shall not be used. Microphones shall be located within 20 cm (8.0 in) of the typical ear location. Microphones shall not be attached to any location which blocks noise from one or more sources, unless multiple microphones are used per personnel location. Microphones may be attached to helmet or shoulders. Microphones attached directly to surfaces shall be corrected for boundary effects. If different noise sources are present on each side of the head center location, microphones shall be used on both sides, located equidistant from the head center, to avoid blocking noise from any direction which would not be blocked if the location was unoccupied. In a side-by-side cockpit arrangement, both inboard and outboard ear locations shall be measured. Measurements shall not be made along the aircraft centerline, unless this coincides with the head location of flight crew. Data shall be corrected to the equivalent center head location.

D.4.5.4.4 Fixed microphone mounting. Brackets or fixtures for holding microphones shall not be located between the microphone diaphragm and any noise source. Microphones may be supported by tripods or similar stands having structural elements whose cross-section dimensions are less than the diameter of the microphone body. Microphones may be suspended above a location with the diaphragm oriented downward.

Source: https://assist.dla.mil -- Downloaded: 2016-10-21T10:43Z
Check the source to verify that this is the current version before use.

D.4.5.4.5 Crew mounted and handheld microphones. Personnel shall avoid blocking noise sources in any direction during measurements.

D.4.5.4.5.1 Spatial averaging technique. The microphone shall be oriented vertically with the diaphragm facing up and moved in a 15 to 30 cm (6.0 to 12 in) horizontal circular path. The microphone speed shall remain as constant as practical.

D.4.5.4.5.2 Distance from operator. The microphone shall be held at least 50 cm (20 in) from the operator's body. A boom may be used to increase this distance.

D.4.5.5 Duration. Each noise measurement shall be at least 30 seconds in duration.

D.4.5.6 External influences. Measured levels of equipment sound shall not be adjusted to compensate for the effects of ambient magnetic, electrical, and acoustical fields. Ambient effects shall be at least 10 dB below the levels specified for the equipment. No reflecting surface shall be nearer than 1.0 m (3.25 ft) to the microphone for any measurement, except measurements where the operator's normal head position is closer than 1.0 m (3.25 ft) to the equipment.

D.4.6 Hazard signs (interior). Hazard signs shall be located in all habitable interior spaces which may equal or exceed 85 dBA so they are visible and legible to all personnel, not just those who are normally required to wear some form of hearing protection (such as crew members). Signs are not required on the exteriors of aircraft. If the only times that sound pressure levels equal or exceed 85 dBA are well defined (such as only during take-off and landing), the requirement may be more specific as to when hearing protection is required. In passenger areas of COTS and COTS-derivative aircraft that are procured and/or exclusively operated by DoD, seat back safety information containing the warning information will be sufficient to satisfy this requirement.

D.5. Detailed requirements by aircraft type.

D.5.1 Propeller driven, fixed-wing aircraft and unmanned aerial systems.

D.5.1.1 Flight, external noise (flyover). Measurements, operating configurations, conditions, and locations for flyover shall be in accordance with ANSI/ASA S12.75.

D.5.1.2 Flight, internal noise. The sound pressure level shall be determined at the head position of all flight crew, mission crew, and passengers operating or travelling in DoD aircraft, for all identified aircraft mission profiles.

D.5.1.2.1 Configurations. The aircraft configurations shall be representative of the worst case for noise associated with each flight profile.

Source: https://assist.dla.mil -- Downloaded: 2016-10-21T10:43Z
Check the source to verify that this is the current version before use.

D.5.1.2.2 Operating conditions. The aircraft operating conditions shall be operated in such a manner as it produces the worst case for noise for each mission profile.

D.5.1.2.3 Loadings. The aircraft loadings shall be such that they produce the worst case for noise for each mission profile, consistent with safe operations.

D.5.1.2.4 Measurement locations. In larger DoD aircraft, when the number of locations to be measured is greater than ten, simplifying assumptions are allowed, such as aircraft geometric symmetry.

D.5.1.3 Ground personnel noise exposure. The microphone array reference point (the 0,0 point in ANSI/ASA S12.75) for 85 dBA contour measurements is to be placed at an easily identified location, such as the intersection of the propeller plane and the aircraft centerline. Measurements shall include nose and tail. At a minimum, noise shall be measured at the following aircraft power settings: maximum power, 80 percent power, and at a power setting typical of low speed taxi operation.

D.5.2 Jet driven, fixed-wing aircraft and unmanned aerial systems.

D.5.2.1 Flight, external noise (flyover). Measurements, operating configurations, conditions, and locations for flyover shall be in accordance with ANSI/ASA S12.75.

D.5.2.2 Flight, internal noise. The sound pressure level shall be determined at the head position of all flight crew and passengers operating or travelling in DoD aircraft, for all identified aircraft mission profiles. Since passenger and crew noise exposure may be dominated by aircraft subsystems (e.g., ventilation system, auxiliary power units), noise tests shall include all possible sources. Maximum gross weight shall be used for take-off operations.

D.5.2.3 Ground personnel noise exposure. Jet driven aircraft noise shall be measured using the microphone locations specified in ANSI/ASA S12.75. At a minimum, noise shall be recorded and analyzed at the following aircraft power settings:

a. For supersonic aircraft.
   (1) maximum afterburner,
   (2) partial afterburner (110 percent),
   (3) full power (non-afterburner), and
   (4) 80 percent power (non-afterburner).
b. For subsonic aircraft.
   (1) maximum power,
   (2) 80 percent power, and
   (3) 50 percent power.

Source: https://assist.dla.mil -- Downloaded: 2016-10-21T10:43Z
Check the source to verify that this is the current version before use.

D.5.3 Vertical or short take-off and landing aircraft (VTOL/STOL/STOVL) and unmanned aerial systems. Aircraft capable of vertical take-offs or vertical landings or short (thrust augmented) take-offs or short landings shall be measured in accordance with the propulsion type, jet, propeller, or rotor. Aircraft such as the V-22, shall be measured as a rotary-wing aircraft while conducting vertical operations or hover, and shall be measured as a propeller aircraft while in forward flight.

D.5.3.1 Flight, external noise (flyover). Measurements for flyover noise of VTOL, STOL, and STOVL fixed-wing aircraft shall be made in accordance with ANSI/ASA S12.75.

D.5.3.2 Flight, internal noise. Take-offs shall be conducted using 80 percent of maximum thrust or greater.

D.5.3.3 Ground personnel noise exposure. ANSI/ASA S12.75 defines noise test procedures for ground test operations of VTOL, STOL, and STOVL aircraft. ANSI/ASA S12.75 describes tests to be performed to measure noise produced by aircraft during ground operations, describes tests to measure noise produced during STOL operations (if applicable), and describes tests to measure noise produced during VTOL operations. Based upon such testing, measurements or estimates of the sound pressure levels and noise dosage shall be determined at all ground personnel work locations during representative ground, VTOL, STOL, and STOVL operations.

D.5.4 Rotary-wing aircraft and unmanned aerial systems.

D.5.4.1 Measurements for initial qualification. Measurements shall be made to identify potential noise hazards to personnel operating, servicing, and maintaining rotary-wing aircraft on the ground as well as in flight, and to determine the effectiveness of electrically-aided and person-to-person voice communications while rotary-wing aircraft and its subsystems and equipment are in full operation (see D.5.4.2). These measurements shall be completed as early as possible during development of prototype and production aircraft so that appropriate corrective action, if required, can be undertaken in a timely, cost-effective manner. All combinations of configuration, operating condition, flight profile, and loading applicable to each mission segment shall be measured.

D.5.4.1.1 Flight operations.

D.5.4.1.1.1 Configurations.

a. Doors and windows open, removable acoustic treatment in.
b. Doors and windows open, removable acoustic treatment out.
c. Doors and windows closed, removable acoustic treatment in.
d. Doors and windows closed, removable acoustic treatment out.
e. Doors and window configuration and acoustic treatment as applicable for use of armaments.

Source: https://assist.dla.mil -- Downloaded: 2016-10-21T10:43Z
Check the source to verify that this is the current version before use.

D.5.4.1.1.2 Operating conditions. The following conditions shall be measured, in addition to those specified in D.4.5.2.

a. Hover in ground effect (HIGE) at a height determined by a Z/D ratio of 0.4 ± 300 mm (12 in) where Z = the height of the rotor above the ground, and D = the main rotor diameter.

b. Hover out of ground effect (HOGE) at a height determined by a Z/D ratio of 1.0.

c. Armament systems operating; with each armament system operating alone, with more than one system operating in varying combinations, and with all systems operating simultaneously.

D.5.4.1.1.3 Loadings.

a. Maximum take-off gross weight (TOGW) with internal load (cargo and passengers).
b. Maximum TOGW with external loads.
c. Midway between maximum TOGW and weight empty.
d. Within 20 percent of weight empty, minimum fuel.

D.5.4.1.1.4 Measurement locations. The following locations shall be measured, in addition to those defined in D.4.5.3.

a. All pilot locations.
b. Seated crew locations for take-off, landing, and ditching.
c. Standing crew locations at each door or window operable in flight.
d. Standing crew locations on the ramp.
e. Prone crew locations at each floor hatch.
f. Mission equipment operation locations.
g. Other crew locations applicable to operation of armaments.
h. Seated passenger and troop locations: forward-most, aft-most and mid-cabin.

D.5.4.1.2 Ground operations.

D.5.4.1.2.1 Configurations.

a. All doors, windows, hatches, and ramp open.
b. All doors, windows, hatches, and ramp closed.

D.5.4.1.2.2 Operating conditions. The following conditions shall be measured, in addition to those defined in D.4.5.2.

Source: https://assist.dla.mil -- Downloaded: 2016-10-21T10:43Z
Check the source to verify that this is the current version before use.

a. All engines operating with rotors turning at flight-idle revolutions (minimum collective pitch), and the APU operating, if so equipped.

b. Same as a. above but with rotors not turning, if the aircraft can be operated in such a manner.

D.5.4.1.2.3 Loadings. As specified by the procuring activity.

D.5.4.1.2.4 Measurement locations. The microphone array reference point for 85 dBA contour measurements shall be located at the axis of the main rotor or the midpoint between multiple main rotors. Measurements shall include nose and tail. The following locations shall be measured, in addition to those defined in D.4.5.3.1.

a. All maintenance locations within the main rotor arc.

b. All maintenance locations near the tail boom and rotor.

c. Forward of the nose, at rotor tip.

D.5.4.2 Subsystems. The subsystem and equipment which are normally operated continuously for more than five (5) minutes per hour in flight shall be operating during flight noise data acquisition. The heater shall be operated unless an air conditioner is present and generates a higher sound pressure level (in dBA); then the air conditioner shall be operated. Where heaters and air conditioners may be operated at the same time (such as for humidity control), both shall be operated.

D.6. Notes.

D.6.1 Intended use. This Appendix is intended for use to establish acoustical noise limits, prescribe testing requirements, and identify measurement techniques for all types of DoD aircraft, including unmanned aerial systems. It is not intended for use to express binding requirements in conceptual and other early acquisition phases, though many of the design criteria would be of benefit in identifying potential problem areas as the design evolves.

D.6.2 Details specified by the procuring activity. Acquisition documents should specify the following:

a. Acoustical information on government furnished equipment (see D.4.4.1.2).

b. The total daily exposure allocated to a system or subsystem (see D.4.4.3.1).

c. A subset of mission profiles, normal operating configurations, steady state flight conditions, and loadings to be used during lot acceptance and quality assurance measurements (see D.4.5.1.1).

d. The number of test aircraft to be sampled (see D.4.5.1.3).

e. Operating conditions for the measurement of internal noise if different from those conditions specified in D.4.5.2.1.1.

f. Loading of rotary-wing aircraft (see D.5.4.1.2.3).

Source: https://assist.dla.mil -- Downloaded: 2016-10-21T10:43Z
Check the source to verify that this is the current version before use.

This page intentionally left blank.

Source: https://assist.dla.mil -- Downloaded: 2016-10-21T10:43Z
Check the source to verify that this is the current version before use.

APPENDIX E

SHIPBOARD EQUIPMENT NOISE REQUIREMENTS

TABLE OF CONTENTS

PARAGRAPH PAGE

E.1 Scope, applicability, purpose, and approach 89
E.1.1 Scope 89
E.1.2 Applicability 89
E.1.3 Purpose 89
E.1.4 Approach 89
E.1.4.1 Measurement 89
E.1.4.2 Acceptance criteria 89
E.1.4.3 Acceptability of equipment 89

E.2 Documents applicable to Appendix E 89

E.3 Definitions 90
E.3.1 Foundation 90
E.3.2 Mounting 90
E.3.2.1 Resiliently mounted equipment 90
E.3.2.2 Solidly mounted equipment 90
E.3.3 Mounting fixture 90
E.3.4 Subbase and bedplate 90

E.4 General requirements 90
E.4.1 Compliance with main body of standard 90
E.4.2 Equipment sampling 91
E.4.3 Test records 91
E.4.3.1 Reference quantity identification 91
E.4.3.2 Measurement bands 91
E.4.3.3 Plotting format 91

Source: https://assist.dla.mil -- Downloaded: 2016-10-21T10:43Z
Check the source to verify that this is the current version before use.

E.5 Detailed requirements 91
E.5.1 Airborne sound acceptance criteria 91
E.5.2 Instrumentation and obstructions 92
E.5.2.1 Microphone mounting and orientation 92
E.5.2.2 Measurements 92
E.5.2.3 Measurement procedures 93
E.5.3 Measurement locations 94
E.5.3.1 Small equipment 97
E.5.3.2 Medium size equipment 98
E.5.3.3 Large equipment 98
E.5.3.4 Valves 98
E.5.4 External influences 98
E.5.5 Mounting of equipment 98
E.5.5.1 Methods 98
E.5.5.2 Foundations 99
E.5.5.3 Mounting fixture 99
E.5.6 Calibration of instrumentation 99
E.5.6.1 Laboratory calibration 99
E.5.6.2 Microphone calibration 99
E.5.6.3 Electrical calibration for airborne sound measuring system 100
E.5.6.4 Field calibration 100
E.5.7 Equipment operating conditions during measurements 100
E.5.7.1 Normal conditions 100
E.5.7.2 Special operating conditions 101
E.5.8 Selection of units 101
E.5.9 Warning plate 101
E.5.10 Drawing and manual information 101

E.6 Notes 101
E.6.1 Intended use 101
E.6.2 Details specified by the procuring activity 101

Source: https://assist.dla.mil -- Downloaded: 2016-10-21T10:43Z
Check the source to verify that this is the current version before use.

E.1 Scope, applicability, purpose, and approach.

E.1.1 Scope. This Appendix prescribes instrumentation and procedures for the measurement and analysis of, and maximum acceptable sound pressure level criteria for, airborne sound generated by shipboard equipment. It also provides criteria for noise and equipment mounting. Requirements for shipboard compartment noise can be found in Appendix F.

E.1.2 Applicability. This Appendix is applicable to all shipboard equipment.

E.1.3 Purpose. This Appendix ensures airborne sound measurements are conducted to demonstrate that equipment levels are within the limits specified herein.

E.1.4. Approach.

E.1.4.1 Measurement. Two basic types of measurement are required: weighted sound pressure (time-average for all measurements and peak for selected measurements) levels and octave band sound pressure levels.

E.1.4.2 Acceptance criteria. Airborne sound acceptance criteria are specified in E.5.1.

E.1.4.3 Acceptability of equipment. Equipment is acceptable when none of the airborne levels measured at the designated locations exceed the applicable acceptance criteria.

E.2. Documents applicable to Appendix E.

MIL-DTL-15024	Plates, Tags, and Bands for Identification of Equipment
MIL-M-17508	Mounts, Resilient: Types 6E100, 6E150, 7E450, 6E900, 6E2000, 5E3500, 6E100BB, 6E150BB, 7E450BB, and 6E900BB
MIL-DTL-19379	Mounts, Resilient, Mare Island Types 11M15, 11M25, and 10M50
MIL-M-19863	Mounts, Resilient: Type 5B5,000H
MIL-M-21649	Mounts, Resilient, Type 5M10,000H
MIL-PRF-32407	Mounts, Resilient (Surface Ship Application)
MIL-HDBK-1908	Definitions of Human Factors Terms
ANSI/ASA S1.1	Acoustical Terminology
ANSI/ASA Sl.4	American National Standard Electroacoustics – Sound Level Meters – Part 1: Specifications
ANSI/ASA S1.6	Preferred Frequencies and Band Numbers for Acoustical Measurements

Source: https://assist.dla.mil -- Downloaded: 2016-10-21T10:43Z
Check the source to verify that this is the current version before use.

ANSI Sl.15, Part 2	Measurement Microphones – Part 2: Primary Method for Pressure Calibration of Laboratory Standard Microphones by the Reciprocity Technique
ANSI/ASA Sl.11, Part 1	Electroacoustics – Octave-Band and Fractional-Octave-Band Analog and Digital Filters – Part 1: Specifications

(The above documents are those cited in this Appendix. For applicability and ordering information, see preambles and addresses, respectively, in Section 2 of the main body of the standard.)

E.3 Definitions. Unless defined below, terms are defined per MIL-HDBK-1908. Terms not appearing in MIL-HDBK-1908, are defined per ANSI/ASA S1.1.

E.3.1 Foundation. Support structure which is used below the resilient mounts and which may or may not resemble the shipboard structure.

E.3.2 Mounting.

E.3.2.1 Resiliently mounted equipment. Equipment that is isolated from a support structure by Navy approved resilient mounts. Navy approved resilient mounts are mounts conforming to MIL-M-17508, MIL-DTL-19379, MIL-M-19863, MIL-M-21649, or MIL-PRF-32407.

E.3.2.2 Solidly mounted equipment. Equipment that is attached directly to the supporting structure. For the purposes of this Appendix, distributed isolated material (DIM) mounted equipment is considered to be solidly mounted equipment.

E.3.3 Mounting fixture. A structure used solely to resiliently mount equipment for noise testing, and not used for shipboard installations. The mounting fixture is located above the resilient mounts and is normally used to mount equipment with a relatively light framework or structure and which is to be solidly mounted shipboard.

E.3.4 Subbase and bedplate. The support structure required for shipboard installations and necessary for purposes such as to hold one or more components within alignment, or to provide a means for attachment to the ship.

E.4. General requirements.

E.4.1 Compliance with main body of standard. Compliance with the provisions of this Appendix shall be in addition to compliance with the applicable provisions of the main body of

Source: https://assist.dla.mil -- Downloaded: 2016-10-21T10:43Z
Check the source to verify that this is the current version before use.

the standard and, in the case of conflict, shall supersede the requirements of the main body.

E.4.2 Equipment sampling. If sampling is called for by the acquisition specifications or the contract or order (see E.6.2), selection of equipment for test shall be on the basis of conformance to the drawing requirements for that equipment, and shall not consider advance measurements, observations, or opinions about the acoustical performance of the particular equipment sample.

E.4.3 Test records.

E.4.3.1 Reference quantity identification. The applicable reference quantity shall be indicated on every table, figure, and graph, and at least once in the text. The reference quantity may be introduced by "re" which indicates that the level is "with reference to". For example, the 125 Hz octave band level re 20 µPa is 85 dB.

E.4.3.2 Measurement bands. The bandwidths of the measurement basis shall be identified together with the measured levels. Normal procedure for identifying measured levels shall include the bandwidth and the band center frequency, per ANSI/ASA S1.6, with the level. For example, the one-third octave 100 Hz band level was 85 dB re 20 µPa.

E.4.3.3 Plotting format. All plots of data in which a level in dB on a linear scale is plotted against frequency on a logarithmic scale shall be made on graphs in which a factor of ten in frequency is equal in length to 25 dB (preferred) or 50 dB. Where the bandwidth of analysis is one-third octave or larger, one factor of ten in frequency shall be 50 mm (2 in) in length. The ordinate and abscissa of all graphs shall be labeled so that levels and frequencies can be readily understood without need to refer elsewhere.

E.5. Detailed requirements.

E.5.1 Airborne sound acceptance criteria. The octave band sound pressure levels of the equipment, measured at the locations of E.5.3 shall not exceed the limits given in Table E-I for the specified equipment grade (see MIL-HDBK-1908). Where no equipment grade has been specified, grade A-12 requirements shall apply. No equipment shall have a peak sound pressure level at or in excess of 140 dBP. Equipment which fails to meet the acceptance criteria shall not be installed in the ship until the following have been accomplished:

a. When specified in the contract or order, a sound test failure notification and recommendations report has been prepared for each deficient equipment item measured.

b. The procuring activity has accepted the deficient equipment or directed the specific course of action.

The final decision, with respect to acceptance, will be made by the Government.

Source: https://assist.dla.mil -- Downloaded: 2016-10-21T10:43Z
Check the source to verify that this is the current version before use.

TABLE E-I. Acceptable octave band sound pressure levels in dB re 20 µPa.

	Octave Band Frequency in Hz								
Equipment Grade	31.5	63	125	250	500	1,000	2,000	4,000	8,000
A-3	75	72	69	66	63	60	57	54	51
A-12	66	63	60	57	54	51	48	45	42
B	72	69	66	63	60	57	54	51	48
C	66	63	60	57	54	51	48	45	42
D	91	88	85	82	79	76	73	70	67
E	82	79	76	73	70	67	64	61	58

E.5.2 Instrumentation and obstructions. Measurements shall be made using a microphone connected to a sound level meter. No obstruction, including the instrument operator, shall be between the equipment being measured and the microphone.

E.5.2.1 Microphone mounting and orientation. The microphone should be mounted on a rigid frame or stand and connected to the sound level meter. If the microphone has the random incidence calibration specified in ANSI/ASA S1.4, the microphone shall be clamped so that the principal sound arrives at the diaphragm at near grazing incidence. The instructions for the sound level meter being used shall be reviewed to assure that the microphone is properly oriented if other than random incidence calibration has been performed. If the microphone must be attached directly to a hand-held sound level meter, the microphone orientation shall still be the same as that appropriate to the microphone on a cable.

E.5.2.2 Measurements. Unless otherwise specified (see E.6.2), the following measurements shall be made:

E.5.2.2.1 A-weighted sound pressure level measurements. A-weighted sound pressure level (L_A) measurements shall be obtained for all equipment in accordance with E.5.2.3.1 and shall be made at the locations specified in E.5.3. These measurements shall be used to determine the locations at which the octave band and peak sound pressure measurements will be made.

E.5.2.2.2 C-weighted sound pressure level measurements. C-weighted sound pressure level (L_C) measurements shall be obtained for all equipment in accordance with E.5.2.3.1 and shall be made at the locations specified in E.5.3. These measurements shall be used to determine the location at which the octave band sound pressure measurements will be made.

E.5.2.2.3 Octave band sound pressure level measurements. Octave band sound pressure level measurements shall be made for all equipment in accordance with E.5.2.3.2 at the location of the highest L_A level and the location of the highest L_C level as measured for E.5.2.2.1 and

Source: https://assist.dla.mil -- Downloaded: 2016-10-21T10:43Z
Check the source to verify that this is the current version before use.

E.5.2.2.2. Octave band measurements shall also be made, where applicable, at the location of the operator's head. In addition, octave band measurements shall be made at all other locations where the level exceeds the A-weighted level limits of Table E-II. A-weighted sound pressure level is not a criterion but rather a screening tool used to identify where additional octave band sound pressure level measurements must be taken.

TABLE E-II. A-weighted sound pressure level limits.

Grade	Sound Pressure Level (dBA)
A-3	63
A-12	54
B	59
C	54
D	78
E	69

E.5.2.2.4 Peak sound pressure levels. Peak sound pressure levels shall be monitored for equipment generating transient sounds using the procedure specified in E.5.2.3.3 at the location selected from E.5.2.2.1 and, where applicable, at the location of the operator's head.

E.5.2.3 Measurement procedures. Unless otherwise specified (see E.6.2), measurement procedures shall be as specified herein.

E.5.2.3.1 A- and C-weighted sound pressure level measurements. A sound level meter, meeting the requirements of an ANSI/ASA S1.4, Type 2 instrument, shall be set on either A-weighting or C-weighting as appropriate and slow meter response, and then used to record the meter indication at each location as L_A and L_C.

E.5.2.3.2 Octave band sound pressure level measurements. Unless otherwise specified (see E.6.2), unweighted octave band sound pressure level measurements shall be made for at least the bands with band-centers from 31.5 to 8,000 Hz, using an instrument set for slow meter response and with filters that meet the specifications in ANSI/ASA S1.11 for Order 3, Type 3-D, Extended Range filters. The input to the octave band instrument will normally be the output of the sound level meter which was used for the L_A and L_C measurements. If any other input is used, the quality and frequency range of the microphone and associated circuitry shall be that required for a Type 2 sound level meter in ANSI/ASA S1.4. These measurements shall be compared to the acceptance criteria.

E.5.2.3.3 Peak sound pressure level measurements. The peak sound pressure level measurements shall be made with a sound level meter, or equivalent, meeting the requirements of ANSI/ASA S1.4 for a Type 2 meter with addition of a measuring circuit that will make a peak sound pressure level measurement where the total rise time of the instrumentation does not exceed 35 microseconds (µs).

Source: https://assist.dla.mil -- Downloaded: 2016-10-21T10:43Z
Check the source to verify that this is the current version before use.

E.5.3 Measurement locations. Unless otherwise specified (see E.6.2), both A-weighted sound pressure level and C-weighted sound pressure level shall be measured at each of the locations described herein. If unweighted octave band measurements are made at all locations, then C-weighted sound pressure level measurements are not required. The number of locations depends upon the size and type of the equipment, as indicated on Figures E-1 through E-4. These figures depict typical equipment configurations; the configuration details are provided for visual reference only. Sound pressure levels shall also be measured at the typical position of an operator's head if the equipment has an operator position associated with it. Microphones shall be placed at locations approximately 1 m (3.25 ft) from the rectangular envelope which just encloses the equipment, except for the typical position of the operator's head (see E.6.2). Also, if the equipment has air openings at any of the designated locations, the microphones may be relocated from the designated location to minimize air flow over the microphone. For such cases, the separation between the measurement location and the designated location shall be minimized and shall be not greater than 30 cm (12 in). In addition, a windscreen shall be used on the affected microphone to further minimize airflow effects.

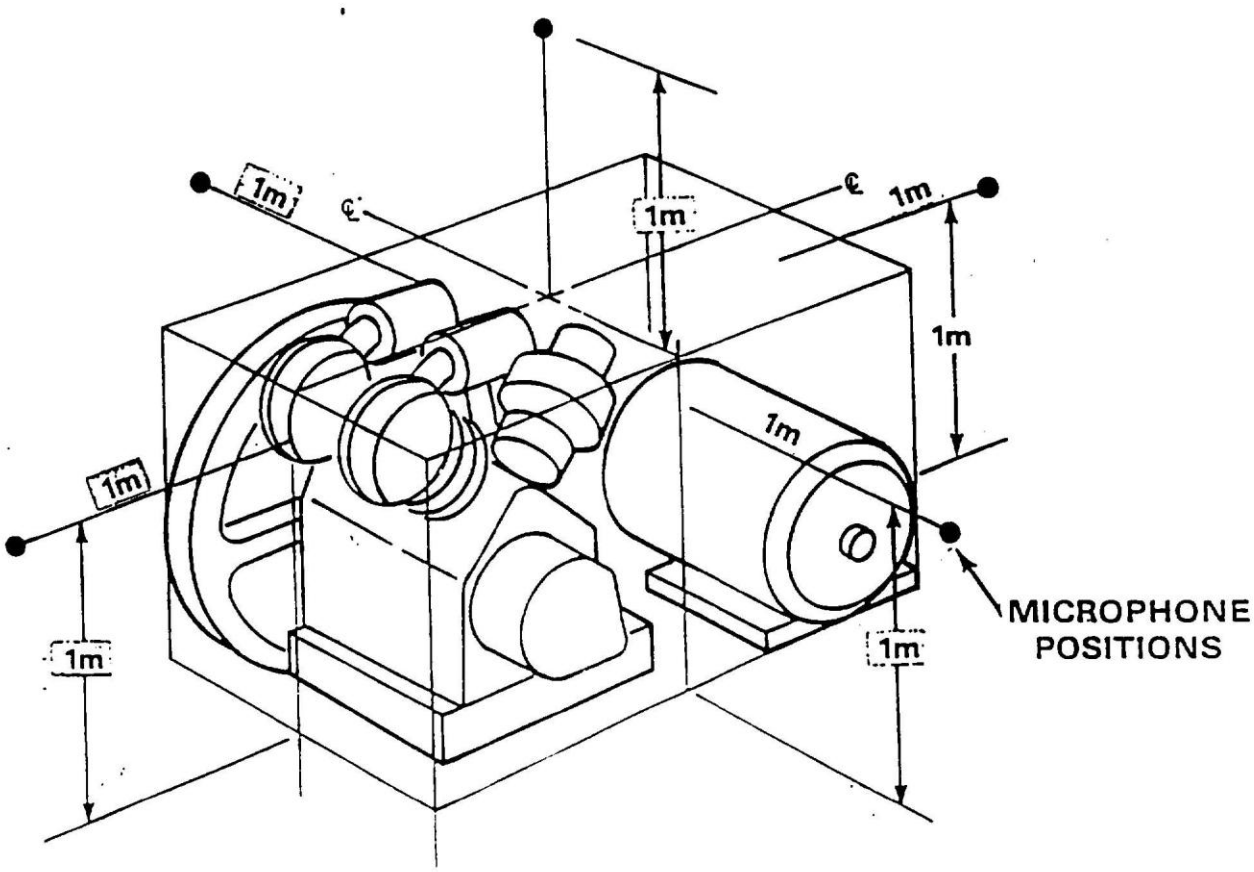

FIGURE E-1. Sound measurement locations for small equipment.

Source: https://assist.dla.mil -- Downloaded: 2016-10-21T10:43Z
Check the source to verify that this is the current version before use.

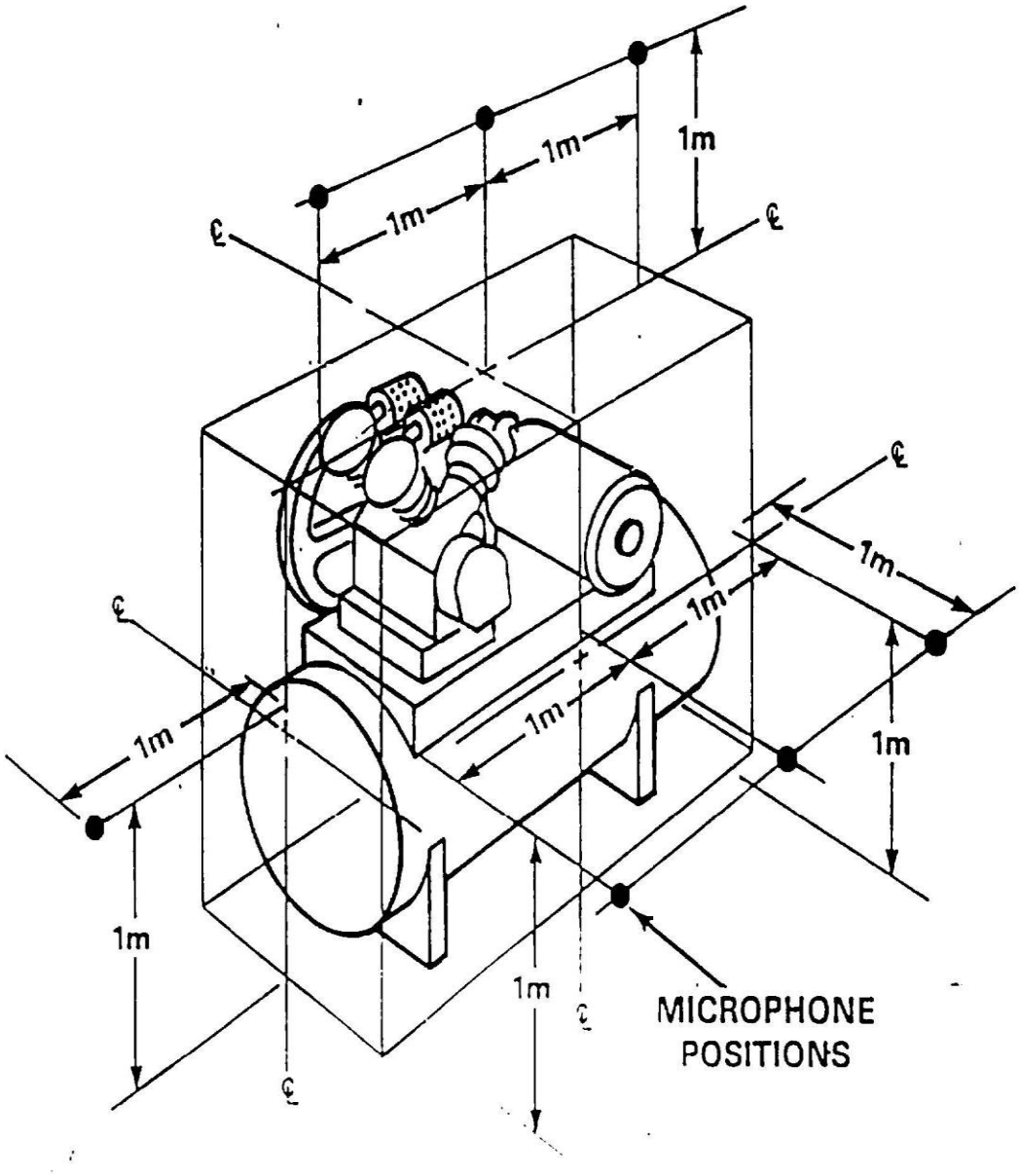

FIGURE E-2. Sound measurement locations for medium size equipment.

Source: https://assist.dla.mil -- Downloaded: 2016-10-21T10:43Z
Check the source to verify that this is the current version before use.

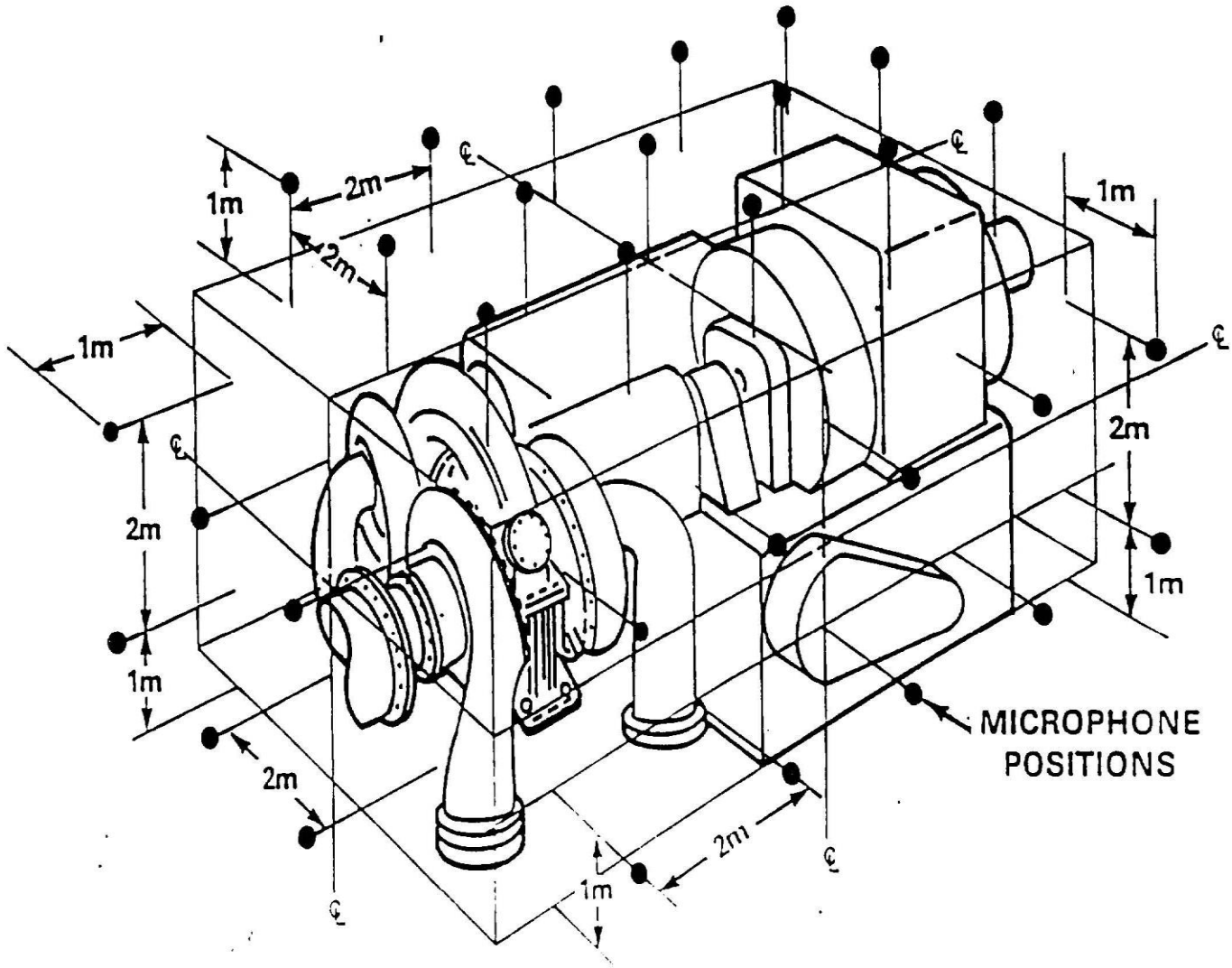

FIGURE E-3. Sound measurement locations for large equipment.

Source: https://assist.dla.mil -- Downloaded: 2016-10-21T10:43Z
Check the source to verify that this is the current version before use.

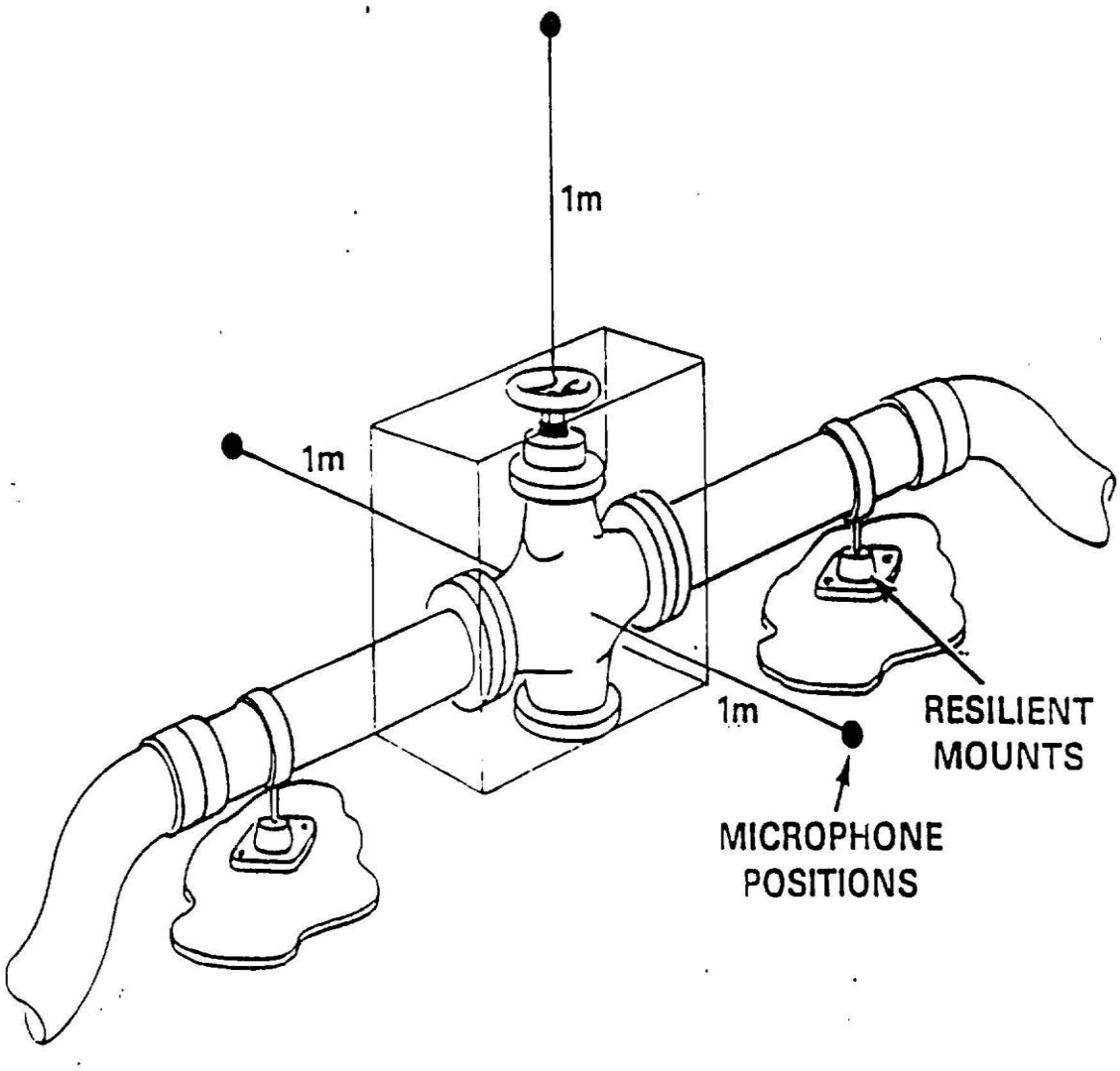

FIGURE E-4. Sound measurement locations for valves.

E.5.3.1 Small equipment. For equipment whose maximum dimension is less than 2 m (6.5 ft), sound pressure levels (L_A and L_C) shall be measured at a minimum of five locations as shown on Figure E-1. The microphone shall be placed 1 m (3.25 ft) from the rectangular envelope of the equipment:

a. on each of the four sides on the vertical centerlines at a distance 1 m (3.25 ft) above the base of the mounted equipment, or if the 1 m (3.25 ft) location is above the top of the equipment, at the height of the horizontal centerline of the equipment, and

b. above the equipment, over the center of the horizontal plane of the envelope.

Source: https://assist.dla.mil -- Downloaded: 2016-10-21T10:43Z
Check the source to verify that this is the current version before use.

E.5.3.2 Medium size equipment. For equipment whose maximum dimensions are between 2 and 4 m (6.5 and 13 ft), the sound pressure levels (L_A and L_C) shall be measured at locations shown on Figure E-2. The microphone shall be placed 1 m (3.25 ft) from the equipment envelope:

a. on each of the four sides on the vertical centerlines at a distance 1 m (3.25 ft) above the base of the mounted equipment, and at successive intervals of not more than 1 m (3.25 ft) each along each side of the equipment envelope, and

b. above the equipment, over the center of the horizontal plane of the envelope and at successive intervals not greater than 1 m (3.25 ft) apart in the horizontal plane.

E.5.3.3 Large equipment. For equipment whose maximum dimensions are greater than 4 m (13 ft), sound pressure levels (L_A and L_C) shall be measured at locations shown on Figure E-3. The microphone shall be placed 1 m (3.25 ft) from the equipment envelope:

a. on each of the four sides on the vertical centerlines at a distance 1 m (3.25 ft) above the base of the mounted equipment, and at successive intervals of not more than 2 m (6.5 ft) each along each side of the equipment envelope, and

b. above the equipment, over the center of the horizontal plane of the envelope and at successive intervals of not more than 2 m (6.5 ft) in the horizontal plane.

E.5.3.4 Valves. Valves require measurements at only three locations: two at opposite sides and one at the valve operating mechanism as shown on Figure E-4.

E.5.4 External influences. Measured levels of equipment sound shall not be adjusted to compensate for the effects of ambient magnetic, electrical, and acoustical fields. Ambient effects shall be at least 10 dB below the levels specified for the equipment. No reflecting surface shall be nearer than 1 m (3.25 ft) to the microphone for any measurement, except measurements where the operator's normal head position is closer than 1 m (3.25 ft) to the equipment. Corrective measures shall be taken to reduce the effects of external sources on the equipment's measured sound pressure level. Where pipes are connected to the equipment, a flexible connection shall be inserted in each pipe run between the equipment and any external piping. Acoustical filters, damped piping, or similar devices shall be employed to reduce fluidborne pressure pulsation effects from external sources. The item of equipment being measured shall be located away from other machinery items. If this is not possible, machinery which is not necessary for the test shall be shut down.

E.5.5 Mounting of equipment. Unless otherwise specified (see E.6.2), mounting methods shall be as specified herein.

E.5.5.1 Methods. Equipment shall be oriented in its normal shipboard installation position. Equipment shall be resiliently mounted as described below regardless of how the equipment is to be mounted in service. Resilient mounts and subbases or bedplates shall normally be the same ones used for shipboard installation. The subbase used for the equipment

Source: https://assist.dla.mil -- Downloaded: 2016-10-21T10:43Z
Check the source to verify that this is the current version before use.

evaluation shall not exceed the weight of the shipboard subbase (see E.6.2). Resilient mounts used in such a case shall be loaded in accordance with the load range specified in the mount specification. The frequencies of the natural modes of vibration of the mounted equipment in the vertical direction shall not exceed 11 Hz or one-fourth of the lowest forcing frequency, whichever is lower. Resilient mounts conforming to MIL-M-17508, MIL-DT-19379, MIL-M-19863, or MIL-M-21649 shall be used where possible. If these mounts cannot be used, commercial mounts that meet the frequency requirements and which are otherwise suitable are acceptable if approved by the procuring activity. When the above mounting methods cannot be met, equipment mounting shall be as approved by the procuring activity. When used in Navy shipboard applications, resilient mounts shall be in accordance with MIL-PRF-32407. The complete assembly shall be supported on a rigid and massive floor, preferably of reinforced concrete or case metal to prevent interaction between the equipment and floor.

E.5.5.2 Foundations. Any foundation pedestals, cradles, or other foundations, required to accommodate resilient mounts, shall assure that the installed mounts provide the vibration isolation of the assembly from the foundation for which the resilient mount is designed. Foundations shall have a natural frequency of not less than 25 Hz.

E.5.5.3 Mounting fixture. Some equipment may be measured while solidly mounted on a resiliently mounted test fixture. This equipment normally consists of units which have a relatively light framework or structure (e.g., controllers, control cubicles, nonrotating or nonreciprocating equipment) and which is to be solidly mounted on shipboard. The procuring activity will specify whether a mounting fixture is required (see E.6.2). Those items requiring attachment to a mounting fixture shall be attached at the normal points of attachment of the equipment. If the equipment being measured contains internal sound isolation mounts, the mass of the fixture shall be great enough to permit these internal mounts to function properly. The mass of the fixture shall not exceed 30% of the total mass of the equipment. The mounting fixture shall be approved by the procuring activity. The combined assembly of equipment item and mounting fixture shall be resiliently mounted and oriented so that the item is in its normal shipboard installation position.

E.5.6 Calibration of instrumentation. Before use, instrumentation shall be calibrated and meet the requirements specified herein.

E.5.6.1 Laboratory calibration. A laboratory calibration shall be made of all sound measuring instrument components within 12 months prior to each use, after exposure to mechanical shock or other unusual disturbing conditions, or upon request by the Government inspector. Calibration instrumentation, including the sound level calibrator used for field calibration shall have a calibration within 6 months prior to each use traceable to the National Institute for Standards and Technology. The laboratory calibration of components shall be accurate within the instrument manufacturer's specification or ±1 dB, whichever is more stringent.

E.5.6.2 Microphone calibration. Calibration of microphones shall be performed in accordance with ANSI/ASA S1.15. Secondary microphones used for the calibration of

Source: https://assist.dla.mil -- Downloaded: 2016-10-21T10:43Z
Check the source to verify that this is the current version before use.

microphones shall be kept under controlled conditions and shall be used only for microphone calibrations.

E.5.6.3 Electrical calibration for airborne sound measuring system. A calibration of each complete airborne sound measuring system including, but not limited to, microphone or simulated microphone, preamplifier, amplifiers, meter, analyzer, level recorder or plotter, and recorder, as applicable, shall be made by introducing known voltages and frequencies in series with the transducers. Cables and connectors shall have the same electrical characteristics (e.g., impedance, frequency response, capacitance) as those used during equipment measurement. System calibration shall ensure accuracy within ± 1 dB.

E.5.6.3.1 Frequency response. Known voltages at known frequencies shall be introduced into the system such as to simulate the microphone output, and the level shall be recorded. The frequencies shall be the band-center frequency of each band in the specified frequency range.

E.5.6.3.2 Linearity calibration. At 125, 500 and 2,000 Hz, calibration shall be made at the voltages equal to the microphone output that represents the

a. acceptance level for the applicable equipment specifications minus 20 dB, and
b. acceptance level for the applicable equipment specifications plus 20 dB.

E.5.6.4 Field calibration. Total system calibrations, using a sound level calibrator or equivalent, shall be performed for each instrument configuration used in making the required measurements. These calibrations shall consist, as a minimum, of a single frequency at a known sound pressure level being introduced into the microphone from a sound source and adjustment of the system so that the system readout, i.e., the meter or recorder indicates the proper sound pressure level. A-weighting will make the proper sound pressure level different from the calibrator sound pressure level. When calibrating the peak measuring circuit, the indicated sound pressure level shall be 3 dB higher than the rms level coming from the sound source. Each instrument configuration shall be field calibrated prior to its use each day. Whenever any component of the measuring system is replaced, a field calibration shall be made with the new component in the system. If the usual instrument settings and small adjustments do not produce the proper sound pressure level indication during calibration, this shall be corrected prior to use of the instrument system. Field calibration shall be accurate within ± 2 dB.

E.5.7 Equipment operation conditions during measurements. Equipment operating conditions shall be as specified herein and in the contract or order.

E.5.7.1 Normal conditions. Equipment shall be operated under normal energized operating conditions including sufficient warmup time to reach normal operating temperature. Unless otherwise specified (see E.6.2) normal operating conditions shall be the rated load of the equipment as is typically defined as a combination of one or more of the following quantities, depending on the type of equipment: speed, power, force, torque, current, voltage. Multiple speed equipment shall be measured at each operating speed. Variable speed equipment shall be

Source: https://assist.dla.mil -- Downloaded: 2016-10-21T10:43Z
Check the source to verify that this is the current version before use.

operated at maximum, 1/2, and minimum speed (5% of maximum if equipment can be operated down to zero speed). Equipment pumps and fans shall be operating during measurements. Where equipment operates as a result of a signal, a representative signal shall be used to energize the equipment during measurements. Background noise measurements shall be made with the equipment not operating for each microphone and location under the normal environmental conditions that will be present when the equipment noise measurements are obtained.

E.5.7.2 Special operating conditions. Operating conditions other than those specified in E.5.7.1 may be required (see E.6.2), such as during change of operating mode, including starting and stopping of the equipment. Some equipment, such as shop tools, requires the identification of items such as working material; tool feed rates, tool tooth size, tool diameter, and tool type to specify how the rated load will be achieved during noise testing.

E.5.8 Selection of units. Unless otherwise specified (see E.6.2), measurements to determine compliance with airborne acceptance criteria shall be made on every noise-emitting equipment item with the following exception: For nonrotating, nonreciprocating equipment, if the first three items of a design are below the criteria by 10 dB or more at all frequencies, the subsequent items shall be selected for test in accordance with the sampling procedures for the applicable selective testing as specified in the equipment specifications.

E.5.9 Warning plate. Equipment that meets the criteria of this Appendix shall be prominently identified with a warning plate bearing the legend, "Quiet Design Equipment - Handle with Extreme Care." The plate shall be either Type A or B of MIL-DTL-15024. Unless otherwise specified (see E.6.2), the requirement applies only to rotating and reciprocating equipment.

E.5.10 Drawing and manual information. In addition to the information required on drawings by the applicable equipment specification, the assembly drawings shall contain specific notes as to assembly procedures and tolerances to be maintained during overhaul so that machines may be restored to designed level of quietness. Maintenance information pertinent to quietness, including assembly techniques and procedures, shall be included in technical manuals required by the acquisition documents.

E.6. Notes.

(This section contains information of a general or explanatory nature which may be helpful, but is not mandatory.)

E.6.1 Intended use. This Appendix is intended to prescribe equipment acquisition testing and certain warning plate requirements and drawing and manual information requirements for shipboard equipment (see E.5.9 and E.5.10).

E.6.2 Details specified by the procuring activity. When this Appendix is invoked, the following should be specified:

Source: https://assist.dla.mil -- Downloaded: 2016-10-21T10:43Z
Check the source to verify that this is the current version before use.

a. Either the criteria of Table E-I or a separate criteria. Acceptance criteria will be based on the design of the machinery and consideration of intended service, overall ship operational requirements, and prior experience with similar acceptable machinery.

b. Sampling procedures for equipment when sampling is desired (see E.4.2).

c. Whether the Government is to be notified of failure, and if so, which organization is to be notified (see E.5.1.a).

d. Measurements other than those specified in E.5.2.2.

e. Measurement procedures and instrumentation if they deviate from E.5.2.3.

f. The frequency range for octave band measurements if other than 31.5 through 8,000 Hz bands are desired (see E.5.2.3.2).

g. Whether there is an operator position for the equipment and, if so, the specific location of the operator's head (see E.5.3).

h. Measurement locations if they deviate from E.5.3.

i. Mounting methods if they deviate from E.5.5.

j. The weight of the shipboard bedplate (see E.5.5.1).

k. Whether a mounting fixture is required (see E.5.5.3).

l. Special equipment operating conditions during airborne sound measurements if operating conditions other than that specified in E.5.7.1 and E.5.7.2 are desired.

m. The selection of units if different from that specified in E.5.8.

n. Whether a warning plate is required for nonrotating or nonreciprocating equipment (see E.5.9).

Source: https://assist.dla.mil -- Downloaded: 2016-10-21T10:43Z
Check the source to verify that this is the current version before use.

APPENDIX F

SHIPBOARD COMPARTMENT NOISE REQUIREMENTS

TABLE OF CONTENTS

PARAGRAPH PAGE

F.1 Scope, applicability, and purpose 105
F.1.1 Scope 105
F.1.2 Applicability 105
F.1.3 Purpose 105

F.2 Documents applicable to Appendix F 105

F.3 Definitions 106
F.3.1 Terms 106
F.3.2 Air moving device 106
F.3.3 Airborne noise 106
F.3.4 Compartment 106
F.3.5 Intermittent noise 106
F.3.6 Noise category 106
F.3.7 Noise hazardous compartment 107
F.3.8 System configuration 107

F.4 General requirements and acceptance criteria 107
F.4.1 Compliance with main body of standard 107
F.4.2 Prime contractor, subcontractor, and supplier responsibilities 107
F.4.3 Compartment airborne noise categories and noise performance criteria 107
F.4.3.1 Noise category A 107
F.4.3.2 Noise category B 107
F.4.3.3 Noise category C 107
F.4.3.4 Noise category D 108
F.4.3.5 Noise category E 108
F.4.4 Equipment type for structureborne noise limits 109
F.4.4.1 Type I equipment 109

Source: https://assist.dla.mil -- Downloaded: 2016-10-21T10:43Z
Check the source to verify that this is the current version before use.

F.4.4.2 Type II equipment 109
F.4.4.3 Type III equipment 110
F.4.4.4 Type IV equipment 110
F.4.5 Noise grades 110

F.5 Compartment airborne noise performance limits 110
F.5.1 Maximum allowable airborne noise limits 110
F.5.1.1 Maximum allowable SPL limits for steady-state conditions 110
F.5.1.2 Maximum allowable SPL for intermittent noise 110
F.5.1.3 Maximum allowable peak sound pressure 111
F.5.1.4 Maximum allowable peak sonar transmission SPL 112
F.5.2 Noise control program plan: Concept design phase 112
F.5.3 Compartment airborne noise analysis: Concept design phase 112
F.5.4 Documentation and review of the noise analysis: Concept design phase 113
F.5.5 Noise control program plan: Preliminary and detail design and construction phase 113
F.5.6 Airborne noise control and design history booklet 113
F.5.7 Compartment noise survey testing and reporting 113
F.5.8 SPL excesses 113
F.5.9 Noise hazardous compartments 114
F.5.10 Equipment pre-installation airborne and structureborne sound measurement test plans 114
F.5.11 Machinery, equipment, and AMD pre-installation airborne and structureborne sound measurement test reports 114
F.5.12 Pre-installation airborne sound measurement test report for AMDs installed in distributed duct systems 114
F.5.13 Sound test failure notifications and recommendations 114
F.5.14 Noisy machinery, equipment, or AMD impact study 115
F.5.15 Consultation with subject matter experts 115
F.5.16 Waivers 115

F.6 Notes 115
F.6.1 Intended use 115
F.6.2 Details specified by the procuring activity 115

Source: https://assist.dla.mil -- Downloaded: 2016-10-21T10:43Z
Check the source to verify that this is the current version before use.

F.1 Scope, applicability and purpose.

F.1.1 Scope. This Appendix establishes acoustical noise limits and imposes testing requirements, measurement procedures, administrative requirements and reporting requirements for demonstrating conformance to steady-state and impulsive airborne noise limits for compartments accessible by shipboard personnel and for on-deck work stations. This Appendix also identifies airborne and structureborne (vibratory) sound performance requirements to be demonstrated by test of equipment and machinery including air moving devices. Requirements for shipboard equipment noise can be found in Appendix E.

F.1.2 Applicability. This Appendix applies to all surface ships, platforms, new constructions and modifications, and service life extension programs.

F.1.3 Purpose. This Appendix provides criteria and procedures to achieve acceptable speech communication, minimize or eliminate noise induced hearing loss, and improve the warfighters overall performance by improving the acoustic environment in which he or she operates.

F.2 Documents applicable to Appendix F.

MIL-STD-882	System Safety
MIL-HDBK-1908	Definitions of Human Factors Terms
DI-HFAC-80270	Machinery and Equipment Airborne Sound Measurements Test Plan
DI-HFAC-80271	Sound Test Failure Notification and Recommendations Report
DI-HFAC-80272	Machinery and Equipment Pre-Installation Airborne Sound Measurements Test Report
DI-HFAC-80273	Equipment Structureborne Vibratory Acceleration Measurement Plan
DI-HFAC-80274	Machinery and Equipment Pre-Installation Structureborne Sound Measurements Test Report
DI-HFAC-81202	Noise Control Program Plan
DI-HFAC-81278	Airborne Noise Analysis and Control Design History Booklet
DI-HFAC-81977	Ship Noise Surveys
DI-HFAC-81981	Air Moving Device Pre-Installation Airborne Sound Testing and Acceptance Criteria Report
ANSI/ASA S1.1	Acoustical Terminology
ANSI/ASA S2.16	Vibratory Noise Measurements and Acceptance Criteria of Shipboard Equipment

Source: https://assist.dla.mil -- Downloaded: 2016-10-21T10:43Z
Check the source to verify that this is the current version before use.

ANSI/ASA S12.16	Guidelines for the Specification of Noise of New Machinery
ANSI/ASA S12.67	Pre-Installation Airborne Sound Measurements and Acceptance Criteria of Shipboard Equipment
ANSI/AMCA 300	Reverberant Room Method for Sound Testing of Fans
OPNAVINST 5100.19	Navy Safety and Occupational Health (SOH) Program Manual for Forces Afloat
SNAME Technical & Research Bulletin 3-37	Design Guide for Shipboard Airborne Noise Control

(The above documents are cited in this Appendix. For applicability and ordering information, see preambles and addresses in Section 2 of the main body of the standard.)

F.3 Definitions.

F.3.1 Terms. Except for the following, terms are defined in accordance with MIL-HDBK-1908. Terms not appearing below or in MIL-HDBK-1908 are defined in accordance with ANSI/ASA S1.1, ANSI/ASA S2.16, ANSI/ASA S12.67, and ANSI/AMCA 300.

F.3.2 Air moving device (AMD). A fan, fan coil unit, fan coil assembly, or air handling unit. AMDs can be installed as stand-alone units; installed in conjunction with distributed systems such as heating, ventilation, and air conditioning systems; provide air supply and/or exhaust for combustion systems; or installed within cabinets and console units to provide cooling for those units.

F.3.3 Airborne noise (or noise). Airborne sound pressure level (SPL) expressed as unweighted octave band levels or as overall A-weighted SPL in units of dB re 20 µPa. Airborne noise source levels for air moving devices are expressed as unweighted octave band sound pressure level values in units of dB re 10^{-12} watt.

F.3.4 Compartment. A space or on-deck work station within a facility, surface ship, vessel, or platform that is accessible by personnel.

F.3.5 Intermittent noise. Sounds that are present for a short duration consisting of a noise burst lasting from one second to 15 minutes that interfere with speech communication.

F.3.6 Noise category. The classification criterion assigned to a specific compartment based on utilization and mission activities that personnel perform at that locale (see F.4.3).

F.3.7 Noise hazardous compartment. A compartment wherein the measured SPL equals or exceeds 85 dBA or the measured sound pressure amplitude equals or exceeds 140 dBP.

Source: https://assist.dla.mil -- Downloaded: 2016-10-21T10:43Z
Check the source to verify that this is the current version before use.

F.3.8 System configuration. The arrangement of living and working spaces and on-deck work stations applicable to the surface ship or platform; and accounts for the acoustic environment in which personnel perform their assigned mission activities within those spaces and areas.

F.4 General requirements and acceptance criteria.

F.4.1 Compliance with main body of standard. Compliance with the provisions of this Appendix shall be in addition to compliance with the applicable provisions of the main body of the standard and, in the case of conflict, shall supersede the requirements of the main body.

F.4.2 Prime contractor, subcontractor, and supplier responsibilities. The prime contractor shall be responsible for total system conformance to the noise performance limits and other requirements stated herein, including performance of products and components furnished by subcontractors and suppliers. The prime contractor shall ensure that all noise limits and other technical and administrative requirements, including design criteria, performance limits, testing, and reporting are provided to subcontractors and suppliers.

F.4.3 Compartment airborne noise categories and noise performance criteria. The airborne noise criterion for a compartment is expressed as the maximum allowable sound pressure level assigned to that compartment. Noise categories apply during steady-state operations, and do not apply to noise produced by impacts or impulses. Noise categories are based on the personnel functions performed within compartments, the need for intelligible speech, and the need to preclude hearing loss. Table F-I provides examples of category assignments for typical compartments. Compartments not specifically listed shall be assigned the same noise category as a listed space which supports a similar function.

F.4.3.1 Noise category A. Category A compartments are compartments in which direct speech communication must be understood with minimal error and without the need for repetition. Category A-3 shall be assigned when the extreme talker-listener distance is less than 2 m (6.5 ft). Category A-12 shall be assigned when the extreme talker-listener distance is 2 m 6.5 ft) or greater. The procuring activity and contractor shall identify compartments as being noise category A-3 or A-12 based on maximum talker-listener distance.

F.4.3.2 Noise category B. Category B compartments are compartments in which comfort of personnel is the primary consideration and communication considerations are secondary.

F.4.3.3 Noise category C. Category C compartments are compartments in which it is essential to maintain especially quiet conditions.

F.4.3.4 Noise category D. Category D compartments are compartments with high SPL values, in which voice communication is not normally important and prevention of hearing loss is the primary consideration.

Source: https://assist.dla.mil -- Downloaded: 2016-10-21T10:43Z
Check the source to verify that this is the current version before use.

F.4.3.5 Noise category E. Category E compartments are compartments with high SPL values, where voice communication is at high vocal effort over short distances, and where amplified speech mechanisms and telephones are normally available.

TABLE F-I. Noise categories for compartments.

Category A Compartments	
Chart room	Air traffic and tactical air control centers
Close in weapon system control room	Briefing room
Conference room, logistics center	Bridge/pilothouse/chart room
Computer room and data processing center	Combat information center
Control rooms	Communication center
Damage control central	Library
Dental/medical offices	Chapel
Electronics workshop	Squadron ready room
Armory	Training space
Missile control center	Barber shop
Office	Multimedia resource center
Radio room, (with radio equipment secured)	Ship store
Propulsion plant enclosed operating station	Storerooms and workshops wherein hazardous materials or munitions are handled.
Category B Compartments	
Berthing space, (excluding toilet shower area)	Mess room
Stateroom, (excluding toilet shower area)	Recreation areas, (excluding on-deck area)
Lounge	Physical fitness room
Category C Compartments	
Medical space, (excluding medical storage space and medical equipment room if unmanned)	Dental operating room
Medical ward	Battle dress station
Medical treatment or consulting room	Medical records office
Category D Compartments	
Anchor windlass room, (anchor windlass not operational)	Passage
Auxiliary machinery room	Power supply/power conversion room
Document destruction room	Scullery
Equipment room, (no command communication; no operator attention required)	Steering gear room

Source: https://assist.dla.mil -- Downloaded: 2016-10-21T10:43Z
Check the source to verify that this is the current version before use.

Engine room or main machinery room	Storerooms
Fan room	Trash disposal/trash compactor room
Galley, (with galley equipment operational)	Workshops
Laundry space & main machinery room	Trunk and staircase immediately adjacent to machinery space and pump room
Category E Compartments	
Armory/magazine/munitions storeroom/weapons stowage areas	Officer-of-the-day station
Boatswain workshop (if normally occupied or used as an issue room	Open bridge and topside watch stations
Bridge wings	Toilet/shower area, (when fixtures are not in operation)
Decontamination station	Refueling and replenishment station
Electronic equipment space, (no command communications but operator attention required)	Repair locker
Non-enclosed operating station	Signal bridge
Flag bridge	Signal shelter
Flammable liquids issue room	Torpedo room
Workshops wherein hazardous materials are handled or a high degree of concentration is necessary	Power plant maneuvering areas, (non-enclosed)
On-deck work station, (at the speed when normal operations are conducted at the specific station; otherwise at sustained speed)	Deck washroom and water closet

F.4.4 Equipment type for structureborne noise limits. For the purpose of identifying maximum allowable structureborne noise (vibration) limits, the term “Type” identifies the various equipment items described below in addition to the types identified in ANSI/ASA S12.16.

F.4.4.1 Type I equipment. Reciprocating compressors, internal combustion engines, turbines, reduction gears, Azipod® units, propulsion motors, water jets, and hydraulic power modules are Type I equipment.

F.4.4.2 Type II equipment. Pumps, purifiers, water makers, sanitation devices, and valves are Type II equipment.

F.4.4.3 Type III equipment. Type III equipment are equipment not covered by Types I, II, or IV.

F.4.4.4 Type IV equipment. Vane axial fans, centrifugal fans, and tube axial fans are Type IV equipment.

Source: https://assist.dla.mil -- Downloaded: 2016-10-21T10:43Z
Check the source to verify that this is the current version before use.

F.4.5 Noise grades. Noise grades I and VII, as defined in ANSI/ASA S12.67, shall not be used. Noise grade IX may be used only for the diesel engines, diesel generators, turbines, reduction gears, bow thrusters, and water jets.

F.5 Compartment airborne noise performance limits. Compartment airborne noise performance limits shall be specified as maximum allowable:

a. SPL for steady-state conditions,
b. SPL when intermittently-operated machinery and equipment are in use,
c. Peak sound pressure, and
d. Peak sonar transmission SPL.

F.5.1 Maximum allowable airborne noise limits. The maximum allowable SPL performance limits are explicitly identified below.

F.5.1.1 Maximum allowable SPL limits for steady-state conditions. The SPL for a shipboard compartment shall not exceed the maximum A-weighted (dBA) SPL limits of Table F-II. The SPL limits of Table F-II apply when dockside or underway at sustained speed with all machinery, equipment, and systems in and around a compartment operating in a normal manner. If the SPL for a compartment exceeds the dBA SPL limit, the unweighted octave band SPL limits of Table F-II shall apply. If the SPL for any one octave band of Table F-II is exceeded by 2 dB or less, the compartment SPL performance shall be acceptable, except if the overall A-weighted SPL equals or exceeds 85 dBA. These steady-state noise limits apply to all surface ships and platforms including sea-going vessels during flight operations. Detailed descriptions of compartment noise categories are given in F.4.3.

F.5.1.2 Maximum allowable SPL for intermittent noise. The maximum allowable SPL when intermittently-operated machinery and equipment are in use shall not exceed the limits in Table F-III. Examples of intermittent operations include but are not limited to:

a. Bow thrusters,
b. Ballasting and de-ballasting systems, compressors, and distributed piping systems,
c. Flight operations that include noise from operational aircraft, and
d. Workshop equipment and hand tools.

Source: https://assist.dla.mil -- Downloaded: 2016-10-21T10:43Z
Check the source to verify that this is the current version before use.

TABLE F-II. Maximum allowable steady-state SPL for compartments.

Airborne Noise Category	Maximum Allowable SPL Limit for Steady-State Condition, (dBA)	Maximum Allowable Unweighted Octave Band SPL Limit, (dB re 20 µPa)								
		Octave Band Center Frequency, (Hz)								
		32	63	125	250	500	1,000	2,000	4,000	8,000
A-3	70	81	78	75	72	69	66	63	60	57
A-12	60	72	69	66	63	60	57	54	51	48
B	65	78	75	72	69	66	63	60	57	54
C	60	72	69	66	63	60	57	54	51	48
D	85	98	95	92	89	86	83	80	77	74
E	75	88	85	82	79	76	73	70	67	64

TABLE F-III. Maximum allowable SPL limit when intermittently operating machinery and equipment are operational.

Noise Category	Maximum SPL Limit, (dBA)
A-3	80
A-12	70
B	75
C	70
D	85
E	85

F.5.1.3 Maximum allowable peak sound pressure. The peak sound pressure for a compartment or for a work station shall not equal or exceed 140 dBP for any operating condition.

F.5.1.4 Maximum allowable peak sonar transmission SPL. The peak SPL at sonar transmission frequency shall not exceed 84 dB.

Source: https://assist.dla.mil -- Downloaded: 2016-10-21T10:43Z
Check the source to verify that this is the current version before use.

F.5.2 Noise control program plan (NCPP): Concept design phase. During the concept design phase, a NCPP shall be developed and implemented by the procuring activity. The plan shall:

a. Assign SPL limits to all compartments and on-deck work stations that are accessible by a door or hatch, i.e., identify compartments by noise category (see F.4.3 and Tables F-I and F-II).

b. Reference the compartment airborne noise analysis to be implemented during concept design (see F.5.3).

c. Identify appropriate material types for insulations, damping materials, resilient mounts, resilient pipe hangers, flexible pipe connections, floating floors, and acoustic enclosures that represent the noise control treatments to be identified in the specification for use in detail design,

d. Identify conceptual machinery and equipment items and air moving devices that shall be supplied by the contractor and that shall be noise tested prior to installation during the detail design and construction phase,

e. Identify all Government Furnished Equipment (GFE) items that generate noise, assign noise performance limits to GFE items, and provide provisions for performing pre-installation airborne and structureborne noise testing of GFE items, and

f. Identify special requirements that apply to the achievement of compliance with assigned noise limits such as:

(1) acoustic enclosures for machinery,

(2) machinery items that are mounted resiliently,

(3) internal combustion engine and turbine muffler and silencer acoustic performance,

(4) pre-installation testing the acoustic performance properties of acoustic insulations, floating floors, damping treatments, and joiner systems, and

(5) procedures for controlling propeller induced noise.

Noise control treatments and material types identified in the plan shall comply with all applicable U.S. Navy and regulatory body requirements pertaining to weight, smoke, fire protection, and toxicity for use on U.S. Navy ships.

F.5.3 Compartment airborne noise analysis: Concept design phase. The procuring activity shall perform a preliminary noise analysis to predict compartment and on-deck station SPL values for steady-state operations using computer modeling and analysis tools and procedures defined in Society of Naval Architects and Marine Engineers (SNAME) Technical & Research Bulletin 3-37 or Designer Noise ™. Predicted SPL values shall be compared to assigned SPL limits defined by Tables F-II and F-III. Noise control materials, treatments, and measures shall be identified that, when implemented, are predicted to result in compliance with assigned SPL limits.

Source: https://assist.dla.mil -- Downloaded: 2016-10-21T10:43Z
Check the source to verify that this is the current version before use.

F.5.4 Documentation and review of the noise analysis: Concept design phase. The noise analysis performed during the concept design phase shall be documented in separate reports that shall be submitted to and reviewed and approved by appropriate subject matter experts (SMEs). The reports shall identify all assumptions used in developing the compartment airborne noise analysis.

F.5.5 Noise control program plan: Preliminary and detail design and construction phases. The contractor shall be responsible for complying with the SPL limits for compartments defined by F.4.3 and Tables F-I and F-II, with the exception of SPL excesses which are demonstrated by analysis to be caused by GFE. During the preliminary and detail design and construction phases, the contractor shall develop, pursue, implement, and report the status of a NCPP in accordance with DI-HFAC-81202.

F.5.6 Airborne noise analysis and control design history booklet. During the detail design and construction phase, a comprehensive airborne noise analysis shall be developed, updated, and reported by the contractor in accordance with DI-HFAC-81278. The contractor shall use computer modeling to predict steady-state SPL values that employ procedures similar to those described in SNAME Technical & Research Bulletin 3-37 or Designer Noise ™. During the design stage, the contractor shall also use computer modeling to predict TWA noise exposure (see OPNAVINST 5100.19). Computer models shall be built that incorporate airborne, structureborne, and duct-borne SPL contributions for Contractor Furnished Equipment and GFE, transmission paths, and compartments that are assigned SPL limits. The model shall capture all noise and vibration sources that are included in the design drawings and identify and optimize acoustic treatments and materials needed to mitigate predicted excessive SPL values and TWA exposures. All inputs to the computer models shall be reported in DI-HFAC-81278. The models shall account for all pre-installation noise test data acquired by implementing F.5.11.

F.5.7 Compartment noise survey testing and reporting. During Builders' Trials, the contractor shall perform SPL survey measurements in accordance with DI-HFAC-81977 for all compartments to demonstrate that SPL values comply with specified limits. Prior to performing noise surveys, construction of the ventilation systems shall be complete and all systems shall be balanced. Additionally, construction of all compartments shall be complete including outfitting each compartment. All noise control materials and treatments identified in DI-HFAC-81202 and DI-HFAC-81278 shall be installed.

F.5.8 SPL excesses. If a compartment SPL excess and/or a noise hazardous compartment is reported in DI-HFAC-81977, the contractor shall update and re-submit DI-HFAC-81278 (see F.5.6). The updated booklet shall identify (a) TWA exposures for compartments with measured SPL values which equal or exceed 85 dBA, and (b) identify and optimize additional noise control treatments and measures needed to have all compartments comply with specified noise limits. The contractor's revised report shall also identify the impact on cost, schedule, weight, and space if the additional treatments and measures were implemented. The procuring activity shall submit the revised report to the SMEs for review and approval. The procuring activity shall select the most suitable option, which shall then be implemented within the scope of the contract. Subsequent to implementation of the corrective

Source: https://assist.dla.mil -- Downloaded: 2016-10-21T10:43Z
Check the source to verify that this is the current version before use.

measures, the contractor shall re-measure SPL values in the compartments and on-deck stations identified in DI-HFAC-81977 as having SPL excesses to verify that re-measured SPL values comply with specified SPL limits. The TWA will then be recalculated for these compartments.

F.5.9 Noise hazardous compartments. If a noise hazardous compartment (see F.3.7) exists, the procedures of OPNAVINST 5100.19 shall be implemented by the procuring activity, and a hearing conservation program shall be instituted.

F.5.10 Equipment pre-installation airborne and structureborne sound measurement test plans. Noise producing machinery, equipment, and AMDs shall be pre-installation tested for airborne and structureborne sound performance. The contractor shall prepare plans for the pre-installation testing of the airborne and the structureborne sound performance of noise-producing machinery, equipment, and AMDs in accordance with DI-HFAC-80270 and DI-HFAC-80273. Testing shall be performed at the supplier's facility unless otherwise approved by the procuring activity. Subsequent to testing, the machinery, equipment, and AMDs shall not be shipped from the suppliers' facility to the contractor prior to the contractor receiving authorization to ship by the procuring activity.

F.5.11 Machinery, equipment, and AMD pre-installation airborne and structureborne sound measurements test reports. Machinery and equipment items that produce airborne or structureborne sound shall be pre-installation tested in accordance with DI-HFAC-80272 and DI-HFAC-80274 respectively. AMDs that are not installed in conjunction with distributed duct systems shall also be pre-installation tested in accordance with DI-HFAC-80272. Each test report shall be submitted to the procuring activity which shall forward the report to the appropriate SMEs.

F.5.12 Pre-installation airborne sound measurement test report for AMDs installed in distributed duct systems. AMDs installed in conjunction with distributed duct systems shall be pre-installation noise tested for sound power performance in accordance with DI-HFAC-81981.

F.5.13 Sound test failure notifications and recommendations. If a machinery item, equipment item, or AMD fails to comply with the specified pre-installation airborne or structureborne sound performance limits, a machinery, equipment, or AMD noise quieting study shall be performed in accordance with DI-HFAC-80271. The study shall determine what design modifications and/or additional noise control materials or treatments shall be added directly to (installed on) the baseline machinery, equipment, or AMD in order for it to comply with the specified pre-installation airborne sound or structureborne sound performance limits. The procuring activity shall forward the study to the SMEs for review and approval. The supplier or contractor shall re-test the item after making design modifications or after installing the additional noise control materials or treatments on (to) the item to demonstrate compliance with the specified pre-installation sound limits. Upon receiving authorization from the procuring activity, the supplier shall ship the machinery or equipment item with the additional noise control materials or features installed. If the contractor determines that it is not technologically or economically feasible to change the design of the item or to add noise control treatments directly to the item to achieve compliance with the specified pre-installation sound performance limits, the contractor shall

Source: https://assist.dla.mil -- Downloaded: 2016-10-21T10:43Z
Check the source to verify that this is the current version before use.

report this determination to the procuring activity in DI-HFAC-80271, along with detailed information that led to this determination.

F.5.14 Noisy machinery, equipment, or AMD impact study. If design modifications or the application of additional noise control materials or treatments to the machinery, equipment, or AMD item fail to reduce its noise levels so as to comply with the specified pre-installation sound performance limits, and it is determined that changes to achieve compliance are not technologically or economically feasible, the contractor shall perform a machinery, equipment, or AMD noise item impact study to determine the additional noise control materials, treatments, or measures that shall be included in the "system configuration" design of the ship or platform in order to comply with the compartment and airborne noise performance limits specified in Tables F-II and F-III. The machinery, equipment, or AMD impact study shall include additional analysis and reporting, similar to that described in F.5.6 that is specifically applicable to compartments or on-deck work stations that will be adversely impacted by noise. The noisy machinery, equipment, or AMD item impact study shall be submitted to the procuring activity for review and approval, who in turn shall submit the study to the SMEs for review and approval. Approval of the noisy machinery, equipment, or AMD item impact study by the procuring activity is required before the item can be shipped from the supplier to the contractor.

F.5.15 Consultation with subject matter experts (SMEs). SMEs reviewing contractor and program reports and analyses shall have expertise in ship and platform noise analysis and control design; other SMEs shall have expertise in health related concerns regarding noise exposure (these could be the same SMEs or different SMEs). The SMEs shall include appropriate personnel from the Naval Sea Systems Command and the Navy and Marine Corps Public Health Center. The SMEs shall provide guidance focused on avoiding noise induced hearing loss and guidance focused on design and implementation of cost-effective engineering controls for noise.

F.5.16 Waivers. Prior to granting waivers, a comprehensive risk assessment shall be prepared by the procuring activity in accordance with MIL-STD-882. In addition to complying with the requirements specified in MIL-STD-882, the total impact on hearing loss and total cost of ownership including costs associated with compensation for hearing loss claims shall also be documented and reported to the appropriate authority for final approval by the Assistant Secretary of the Navy for Research, Development & Acquisitions.

F.6 Notes.

F.6.1 Intended use. This Appendix is intended for use to establish acoustical noise limits and impose testing requirements, measurement procedures, administrative requirements and reporting requirements for demonstrating conformance to steady-state and intermittent airborne noise limits for compartments accessible by shipboard personnel and for on-deck work stations.

F.6.2 Details specified by the procuring activity. Acquisition documents should specify the following:

Source: https://assist.dla.mil -- Downloaded: 2016-10-21T10:43Z
Check the source to verify that this is the current version before use.

a. Identify compartments as being noise category A-3 or A-12 (see F.4.3.1).
b. Select the most suitable option to mitigate sound pressure level excesses (see F.5.8).
c. Identify the facility to be used for testing if different from that identified in F.5.10.

Source: https://assist.dla.mil -- Downloaded: 2016-10-21T10:43Z
Check the source to verify that this is the current version before use.

CONCLUDING MATERIAL

Custodians:
Army – MI
Navy – NM
Air Force - 11

Preparing Activity:
Army - MI
(Project HFAC-2015-019)

Review activities:
OSD OH
Army - AM, AR, AT, AV, CE, CR, CR4, MD, TE
Navy – AS, CG, EC, MC, OS, SA, SH, YD
Air Force – 05, 10, 13, 19, 22, 70, 71, 84, 99

Industry associations:
AIA
ASA
EIA
HFES
SAE

Civil Agency Coordinating Activities:
DOT – FAA
EPA
NASA – MSF
NIST
DOL (OSHA)

NOTE: The activities listed above were interested in this document as of the date of this document. Since organizations and responsibilities can change, you should verify the currency of the information above using the ASSIST Online database at https://assist.dla.mil.

Source: https://assist.dla.mil -- Downloaded: 2016-10-21T10:43Z
Check the source to verify that this is the current version before use.