METRIC

MIL-C-83522/18B
11 May 1995

SUPERSEDING
MIL-C-83522/18A
25 June 1992

MILITARY SPECIFICATION

CONNECTOR FIBER OPTIC, SINGLE TERMINUS, RECEPTACLE, BAYONET COUPLING (ST STYLE), 2.5 MILLIMETER DIAMETER FERRULE, PC MOUNTING

This specification is approved for use by all Departments and Agencies of the Department of Defense.

The requirements for acquiring the product described herein shall consist of this specification sheet and the issue of the following specification listed in that issue of the Department of Defense Index of Specifications and Standards (DODISS) specified in the solicitation: MIL-C-83522.

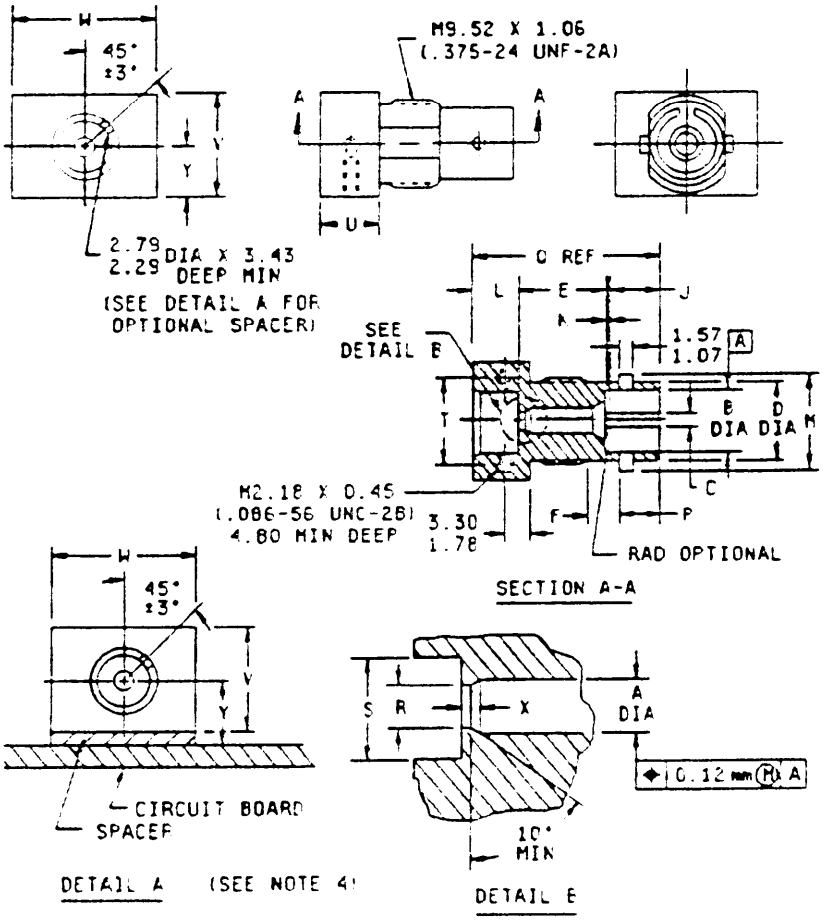

mm	Inches
0.12	.005
1.07	.042
1.57	.062
1.78	.070
2.18	.086
2.29	.090
2.79	.110
3.30	.130
3.43	.135
4.80	.189
9.52	.375

FIGURE 1. Dimensions and configuration.

DISTRIBUTION STATEMENT A. Approved for public release: distribution is unlimited.

Source: https://assist.dla.mil -- Downloaded: 2016-12-30T11:28Z
Check the source to verify that this is the current version before use.

Letter	Millimeters		Inches	
	Min	Max	Min	Max
A	2.502	2.517	.0985	.0991
B	5.49 min		.216 min	
C	1.12	1.47	.044	.058
D		7.04 max		.277 max
E	7.62	7.80	.300	.307
F	4.80	5.56	.189	.219
J		7.50 max		.295
K		0.44 max		.017 max
L	5.21	5.46	.205	.215
M	8.12	8.53	.320	.336
P		5.13 max		.202
Q	20.37	20.60	.781	.810
R	1.91	2.01	.075	.085
S	5.74	5.84	.226	.230
T	9.40	9.65	.370	.380
U	5.21	5.46	.205	.235
V	9.45	9.70	.310	.420
W	12.60	12.80	.495	.505
X	0.152	0.203	.006	.008
Y	4.67	5.33	.184	.210

NOTES:
1. Dimensions are in millimeters.
2. Inch equivalents are given for general information only.

FIGURE 1. Dimensions and configuration - Continued.

Source: https://assist.dla.mil -- Downloaded: 2016-12-30T11:28Z
Check the source to verify that this is the current version before use.

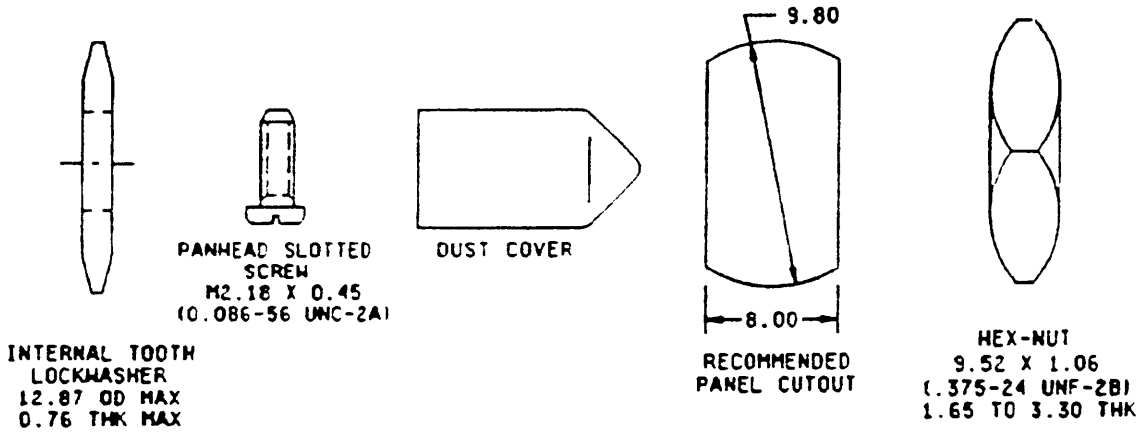

mm	Inches	mm	Inches
.45	.018	3.30	.130
.76	.030	8.00	.315
1.06	.042	9.52	.375
1.65	.065	9.80	.385
2.18	.086	12.87	.507

FIGURE 2. Recommended panel cutout and accessories dimensions.

REQUIREMENTS:

Metals: The receptacle and other metal components shall be of corrosion resistant steel in accordance with QQ-S-763, class 303/316L or ASTM A-276, designation S31803, or nickel-plated brass, alloy 345 or 360, in accordance with ASTM B-16.

Dust covers: Shall be thermoplastic.

Hex nut, internal tooth lockwasher, and panhead slotted screw: Shall be stainless steel or nickel-plated brass.

Dimensions and configuration: See figures 1 and 2.

Panhead slotted screw: Length shall be 4.76 mm (.188 inch).

Optical requirements:

Optical loss (attenuation): Not applicable.

Nuclear radiation resistance: Not applicable.

Weight: 20 grams maximum.

Safety wire holes: Not applicable.

Force to engage and disengage:

Longitudinal force: Not applicable.

Torque: Not applicable.

Source: https://assist.dla.mil -- Downloaded: 2016-12-30T11:28Z
Check the source to verify that this is the current version before use.

Coupling proof torque: Not applicable.

Coupling mechanism retention force: Not applicable.

Fiber optical cable: Not applicable.

Water submersion: Not applicable.

Ozone exposure: Not applicable.

Fluid immersion: Not applicable.

Temperature cycling: Applicable except 5 cycles, -55°C to +85°C.

Mating durability: Applicable.

Residual magnetism: Not applicable.

High impact shock: Applicable to all receptacles. For SM/MM receptacles tested with connectors assembled on single-mode fiber, signal discontinuity is not applicable during shock. For MM receptacles and SM/MM receptacles tested with connectors assembled on multimode fiber, signal discontinuity is applicable during shock.

Receptacle accessories: Each receptacle shall be packaged with a minimum of one hex nut, one internal tooth lockwasher, one dust cover, and two panhead slotted screws.

Group A inspection: During group A inspection, all dimensions may be verified on a sampled basis. Weight may also be verified on a sampled basis. The qualifying activity shall be notified of all failures during any sampled inspections.

This receptacle mates with a MIL-C-83522/16 plug connector.

Part or Identifying Number (PIN) is a new term encompassing previous terms used in specifications such as part number, type designator, or identification number.

PIN: M83522/18 - X X X

Temperature

Fiber size

Addition considerations

Temperature:
- H - High
- N - Normal

Fiber size
- X (type I) (125 µm, MM)
- Y (type II)(125 µm, MM/SM)
- Z (type I) (140 µm, MM)

Addition considerations:
- S - Qualified to space flight requirements.

Qualification by similarity: Manufacturers who produce products for both MIL-C-83522/17 and this specification sheet and are qualified under MIL-C-83522/17 and pass the size inspection specified herein, are qualified under this specification sheet.

Source: https://assist.dla.mil -- Downloaded: 2016-12-30T11:28Z
Check the source to verify that this is the current version before use.

CONCLUDING MATERIAL

Custodians:
Army - CR
Navy - SH
Air Force - 85
NASA - NA

Review activities:
Navy - EC
Air Force - 17, 19, 80, 90, 99
DLA - ES

Preparing activity:
Air Force - 85

Agent:
DLA - ES

(Project number 6060-0109-03)

Source: https://assist.dla.mil -- Downloaded: 2016-12-30T11:28Z
Check the source to verify that this is the current version before use.