INCH-POUND

The documentation and process conversion measures necessary to comply with this revision shall be completed by

MIL-S-19500/527A
1 July 1993
SUPERSEDING
MIL-S-19500/527
4 August 1977

MILITARY SPECIFICATION

SEMICONDUCTOR DEVICE, DARLINGTON TRANSISTOR, PNP, SILICON, POWER
TYPES 2N6648, 2N6649, AND 2N6650 JANTX AND JANTXV

This specification is approved for use by all Departments and Agencies of the Department of Defense.

1. SCOPE

1.1 Scope. This specification covers the detail requirements for PNP Darlington, silicon, power transistors. Two levels of product assurance are provided for this device type as specified in MIL-S-19500.

1.2 Physical dimensions. See figure 1 (TO-3).

1.3 Maximum ratings.

	P_T 1/ T_A = +25°C	P_T 2/ T_C = +25°C	V_{CBO}	V_{CEO}	V_{EBO}	I_C	I_B	T_J and T_{STG}	$R_{\theta JC}$
	W	W	V dc	V dc	V dc	A dc	A dc	°C	°C/W
2N6648	5.0	85	-40	-40	-5.0	-10	-0.25	-65 to +175	1.76
2N6649	5.0	85	-60	-60	-5.0	-10	-0.25	-65 to +175	1.76
2N6650	5.0	85	-80	-80	-5.0	-10	-0.25	-65 to +175	1.76

1/ Derate linearly 33.3 mW/°C above T_A > +25°C.
2/ Derate linearly 567 mW/°C above T_C > +25°C.

1.4 Primary electrical characteristics.

	h_{FE1}	h_{FE2}	$V_{CE(SAT)1}$	$V_{CE(SAT)2}$	$V_{BE(ON)1}$	C_{obo}	$\|h_{fe}\|$	Pulse response	
	V_{CE} = -3 V dc I_C = -1 A dc 1/	V_{CE} = -3 V dc I_C = -5 A dc 1/	I_C = -5.0 A dc I_B = -10 mA dc	I_C = 10 A dc I_B = 0.1 A dc 1/	V_{CE} = -3.0 V dc I_C = -5.0 A dc 1/	V_{CB} = 10 V dc I_E = 0 100 kHz ≤ f ≤ 1 MHz	V_{CE} = -5.0 V dc I_C = -1.0 A dc f = 1 MHz	t_{on}	t_{off}
			V dc	V dc	V dc	pf		µs	µs
Min	300	1,000					50		
Max		20,000	-2.0	-3.0	-2.8	300	400	2.5	10.0

1/ Pulsed (see 4.5.1).

Beneficial comments (recommendations, additions, deletions) and any pertinent data which may be of use in improving this document should be addressed to: NASA/Parts Project Office (NPPO), NASA Goddard Space Flight Center, Code 310.A, Greenbelt, MD 20771 by using the Standardization Document Improvement Proposal (DD Form 1426) appearing at the end of this document or by letter.

AMSC N/A FSC 5961

DISTRIBUTION STATEMENT A. Approved for public release; distribution is unlimited.

Source: https://assist.dla.mil -- Downloaded: 2016-12-04T13:21Z
Check the source to verify that this is the current version before use.

2. APPLICABLE DOCUMENTS

2.1 Government documents.

2.1.1 Specifications, standards, and handbooks. The following specifications, standards, and handbooks form a part of this document to the extent specified herein. Unless otherwise specified, the issues of these documents are those listed in the issue of the Department of Defense Index of Specifications and Standards (DODISS) and supplement thereto, cited in the solicitation (see 6.2).

SPECIFICATION

MILITARY

MIL-S-19500 - Semiconductor Devices, General Specification for.

STANDARD

MILITARY

MIL-STD-750 - Test Methods for Semiconductor Devices.

(Unless otherwise indicated, copies of federal and military specifications, standards, and handbooks are available from the Standardization Documents Order Desk, Building 4D, 700 Robbins Avenue, Philadelphia, PA 19111-5094.)

2.2 Order of precedence. In the event of a conflict between the text of this document and the references cited herein, the text of this document takes precedence. Nothing in this document, however, supersedes applicable laws and regulations unless a specific exemption has been obtained.

3. REQUIREMENTS

3.1 Detail specification. The individual item requirements shall be in accordance with MIL-S-19500, and as specified herein.

3.2 Abbreviations, symbols, and definitions. Abbreviations, symbols, and definitions used herein shall be as specified in MIL-S-19500.

3.3 Design, construction, and physical dimensions. The design, construction, and physical dimensions shall be as specified in MIL-S-19500, and figure 1 herein.

3.3.1 Lead finish. Lead finish shall be solderable in accordance with MIL-STD-750 and MIL-S-19500. Where a choice of lead finish is desired, it shall be specified in the contract or purchase order (see 6.2).

3.4 Marking. Marking shall be in accordance with MIL-S-19500 except, at the option of the manufacturer, the country of origin may be omitted from the body of the transistor.

4. QUALITY ASSURANCE PROVISIONS

4.1 Sampling and inspection. Sampling and inspection shall be in accordance with MIL-S-19500, and as specified herein.

4.2 Qualification inspection. Qualification inspection shall be in accordance with MIL-S-19500, and as specified herein.

Source: https://assist.dla.mil -- Downloaded: 2016-12-04T13:21Z
Check the source to verify that this is the current version before use.

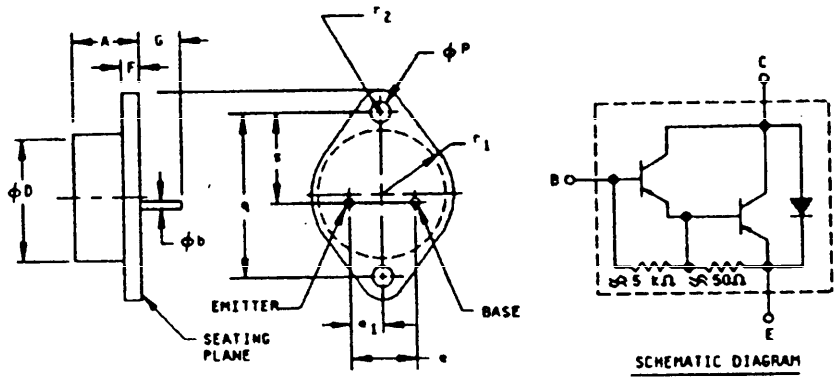

Symbol	Inches		Millimeters		Notes
	Min	Max	Min	Max	
A	.250	.450	6.35	11.43	
ϕb	.038	.043	.97	1.09	2
ϕD		.875		22.22	
e	.420	.440	10.67	11.18	
e_1	.205	.225	5.21	5.72	
F	.050	.135	1.27	3.43	
G	.312		7.92		2
ϕP	.151	.161	3.84	4.09	
q	1.177	1.197	29.90	30.40	
r_1	.495	.525	12.57	13.34	
r_2	.131	.188	3.33	4.78	
s	.655	.675	16.64	17.14	1

NOTES:
1. These dimensions should be measured at points .050 inch (1.27 mm) to .055 inch (1.40 mm) below seating plane. When gauge is not used, measurement will be made at seating plane.
2. Two leads.
3. Collector shall be electrically connected to the case.
4. Metric equivalents are given for general information only.

FIGURE 1. Physical dimensions.

Source: https://assist.dla.mil -- Downloaded: 2016-12-04T13:21Z
Check the source to verify that this is the current version before use.

4.3 Screening (JANTX and JANTXV levels only). Screening shall be in accordance with MIL-S-19500 (table II), and as specified herein. The following measurements shall be made in accordance with table I herein. Devices that exceed the limits of table I herein shall not be acceptable.

Screen (see table II of MIL-STD-19500)	Measurement
	JANTX and JANTXV levels only
11	I_{CEX1} and h_{FE1}
12	See 4.3.1
13	ΔI_{CEX1} 100% of initial value or .3 μA dc, whichever is greater. Δh_{FE1} = ±25% of initial value; subgroup 2 of table I herein.

4.3.1 Power burn-in conditions. Power burn-in conditions are as follows:

T_J = +162.5°C ±12.5°C; 2N6648 = V_{CB} = -30 V dc; 2N6649 = V_{CB} = -40 V dc; 2N6650 = V_{CB} = -60 V dc.

4.4 Quality conformance inspection. Quality conformance inspection shall be in accordance with MIL-S-19500, and as specified herein.

4.4.1 Group A inspection. Group A inspection shall be conducted in accordance with MIL-S-19500, and table I herein. Electrical measurements (endpoints) and delta requirements shall be in accordance with the applicable steps of table II herein.

4.4.2 Group B inspection. Group B inspection shall be conducted in accordance with the conditions specified for subgroup testing in table IVb (JANTX, and JANTXV) of MIL-S-19500, and as follows. Electrical measurements (endpoints) and delta requirements shall be in accordance with the applicable steps of table II herein.

4.4.2.1 Group B inspection, Table IVb of MIL-S-19500.

a. Subgroup 5: Thermal resistance; method 3131; see 4.5.2 herein.

b. Subgroup 6: High-temperature life (non operating); method 1032; T_{STG} = +175°C.

4.4.3 Group C inspection. Group C inspection shall be conducted in accordance with the conditions specified for subgroup testing in table V of MIL-S-19500 and as follows. Electrical measurements (endpoints) and delta requirements shall be in accordance with the applicable steps of table II herein.

4.4.3.1 Group C inspection Table V of MIL-S-19500.

a. Subgroup 2: Terminal strength (tension); method 2036; test condition A, weight = 10 lbs., t = 15 s.

4.5 Methods of inspection. Methods of inspection shall be as specified in the appropriate tables and as follows:

4.5.1 Pulse measurements. Conditions for pulse measurement shall be as specified in section 4 of MIL-STD-750.

Source: https://assist.dla.mil -- Downloaded: 2016-12-04T13:21Z
Check the source to verify that this is the current version before use.

4.5.2 Thermal resistance. Thermal resistance measurements shall be conducted in accordance with method 3131 of MIL-STD-750. The following details shall apply:

a. Collector current magnitude during power application shall be 1 A dc.

b. Collector to emitter voltage magnitude shall be ≥ 5 V dc.

c. Reference temperature measuring point shall be the case.

d. Reference point temperature shall be +25°C ≤ T_R ≤ +75°C and recorded before the test is started.

e. Mounting arrangement shall be with heat sink to header.

f. Maximum limit shall be $R_{\theta JC}$ = 1.76°C/W.

Source: https://assist.dla.mil -- Downloaded: 2016-12-04T13:21Z
Check the source to verify that this is the current version before use.

TABLE I. Group A inspection.

Inspection 1/	MIL-STD-750		Symbol	Limits		Units
	Method	Conditions		Min	Max	
Subgroup 1						
Visual and mechanical examination	2071					
Subgroup 2						
Breakdown voltage, collector to emitter	3011	Bias condition D I_C = 200 mA dc Pulsed (see 4.5.1).	$V_{(BR)CEO}$			
2N6648				-40		V dc
2N6649				-60		V dc
2N6650				-80		V dc
Breakdown voltage, collector to emitter	3011	Bias condition B I_C = 200 mA dc R_{BB} = 100 ohms Pulsed (see 4.5.1).	$V_{(BR)CER}$			
2N6648				-40		V dc
2N6649				-60		V dc
2N6650				-80		V dc
Collector to emitter cutoff current	3041	Bias condition D	I_{CEO}		-1	mA dc
2N6648		V_{CE} = -40 V dc				
2N6649		V_{CE} = -60 V dc				
2N6650		V_{CE} = -80 V dc				
Emitter to base cutoff current	3061	Bias condition D V_{EB} = 5 V dc	I_{EBO}		-10	mA dc
Collector to emitter cutoff current	3041	Bias condition A V_{BE} = 1.5 V dc	I_{CEX1}		-.3	mA dc
2N6648		V_{CE} = -40 V dc				
2N6649		V_{CE} = -60 V dc				
2N6650		V_{CE} = -80 V dc				
Collector to base cutoff current	3036	Bias condition D	I_{CBO}		-1	mA dc
2N6648		V_{CB} = -40 V dc				
2N6649		V_{CB} = -60 V dc				
2N6650		V_{CB} = -80 V dc				
Base emitter voltage (nonsaturated)	3066	Test condition B V_{CE} = -3.0 V dc I_C = -5.0 A dc Pulsed (see 4.5.1).	$V_{BE(ON)1}$		-2.8	V dc
Base emitter voltage (nonsaturated)	3066	Test condition B V_{CE} = -3.0 V dc I_C = -10 A dc Pulsed (see 4.5.1).	$V_{BE(ON)2}$		-4.5	V dc

See footnote at end of table.

Source: https://assist.dla.mil -- Downloaded: 2016-12-04T13:21Z
Check the source to verify that this is the current version before use.

TABLE I. Group A inspection - Continued.

Inspection 1/	MIL-STD-750		Symbol	Limits		Units
	Method	Conditions		Min	Max	
Subgroup 2 - Continued						
Collector-emitter saturated voltage	3071	I_C = -5.0 A dc I_B = -10 mA dc	$V_{CE(sat)1}$		-2.0	V dc
Collector-emitter saturated voltage	3071	I_C = -10 A dc I_B = -0.1 A dc Pulsed (see 4.5.1).	$V_{CE(sat)2}$		-3.0	V dc
Forward-current transfer ratio	3076	V_{CE} = -3.0 V dc I_C = -1 A dc Pulsed (see 4.5.1).	h_{FE1}	300		
Forward-current transfer ratio	3076	V_{CE} = -3.0 V dc I_C = -5 A dc Pulsed (see 4.5.1).	h_{FE2}	1,000	20,000	
Forward-current transfer ratio	3076	V_{CE} = -3.0 V dc I_C = -10 A dc Pulsed (see 4.5.1).	h_{FE3}	100		
Subgroup 3						
High-temperature operation		T_A = +150°C				
Collector to emitter cutoff current 2N6648 2N6649 2N6650	3041	Bias condition A V_{BE} = 1.5 V dc V_{CE} = -40 V dc V_{CE} = -60 V dc V_{CE} = -80 V dc	I_{CEX2}		-3.0	mA dc
Low-temperature operation		T_A = -65°C				
Forward-current transfer ratio	3076	V_{CE} = -3.0 V dc I_C = -5.0 A dc Pulsed (see 4.5.1).	h_{FE4}	200		
Subgroup 4						
Pulse response:	3251	Test condition A, except test circuit and pulse requirements in accordance with figure 2.				
Turn-on time		V_{CC} = -30 V dc I_C = -5.0 A dc I_{B1} = -20 mA dc	t_{on}		2.5	µs
Turn-off time		V_{CC} = -30 V dc I_C = -5.0 A dc I_{B1} = $-I_{B2}$ 20 mA dc	t_{off}		10.0	µs

See footnote at end of table.

Source: https://assist.dla.mil -- Downloaded: 2016-12-04T13:21Z
Check the source to verify that this is the current version before use.

TABLE I. Group A inspection - Continued.

Inspection 1/	MIL-STD-750		Symbol	Limits		Units
	Method	Conditions		Min	Max	
Subgroup 4 - Continued						
Magnitude of small-signal short-circuit forward-current transfer ratio	3306	V_{CE} = -5 V dc I_C = -1 A dc f = 1.0 MHz	$\|h_{fe}\|$	50	400	
Open circuit output capacitance	3236	V_{CB} = 10 V dc I_E = 0 100 kHz ≤ f ≤ 1 MHz	C_{obo}		300	pF
Subgroup 5						
Safe operating area (continuous dc)	3051	T_C = +25°C, t = 1.0 s, 1 cycle (see figure 3)				
Test 1						
(Both device types)		V_{CE} = 8.5 V dc; I_C = -10 A dc				
Test 2						
(Both device types)		V_{CE} = 25 V dc; I_C = -3.4 A dc				
Test 3						
2N6648		V_{CE} = -40 V dc; I_C = -0.9 A dc				
2N6649		V_{CE} = -60 V dc; I_C = -0.3 A dc				
2N6650		V_{CE} = -80 V dc; I_C = -0.14 A dc				
Electrical measurements		See table II, steps 1 and 3				
Safe operating area (switching)	3053	Load condition C (unclamped inductive load) (see figure 4); T_C = +25°C duty cycle ≤ 10% R_S ≤ 0.1Ω				
Test 1		t_p = 1 ms; (vary to obtain I_C) R_{BB1} = 1 kΩ; V_{BB1} = -10 V dc R_{BB2} = ∞; V_{BB2} = 0 V V_{CC} = -30 V dc; I_C = -10 A dc R_L = 0.5Ω; L = 0.25 mH at 10 A dc				
Test 2		t_p = 1 ms; (vary to obtain I_C) R_{BB1} = 10 kΩ; V_{BB1} = -10 V dc R_{BB2} = ∞; V_{BB2} = 0 V V_{CC} = -30 V dc; I_C = -0.2 A dc L = 20 mH at 0.2 A dc R_L = 0.5Ω				

See footnote at end of table.

Source: https://assist.dla.mil -- Downloaded: 2016-12-04T13:21Z
Check the source to verify that this is the current version before use.

TABLE I. Group A inspection - Continued.

Inspection 1/	MIL-STD-750		Symbol	Limits		Units
	Method	Conditions		Min	Max	
Subgroup 5 - Continued						
Safe operating area (switching)	3053	Load condition B (clamped inductive load); see figure 5; T_A = +25°C; $t_r + t_f$ ≤ 1 µs; duty cycle ≤ 10% t_p = 5 ms; (vary to obtain I_C); R_S = 0.1Ω; V_{CC} = -10 V dc I_C = -10 A dc				
2N6648		Clamp voltage = -40 V dc				
2N6649		Clamp voltage = -60 V dc				
2N6650		Clamp voltage = -80 V dc				
		Device fails if clamp voltage is not reached.				
Electrical measurements		See table II, steps 1 and 3				
Subgroup 6						
Not applicable						

1/ For sampling plan, see MIL-S-19500.

Source: https://assist.dla.mil -- Downloaded: 2016-12-04T13:21Z
Check the source to verify that this is the current version before use.

TABLE II. Groups A, B, and C electrical measurements. 1/ 2/

Step	Inspection	MIL-STD-750		Symbol	Limits		Units
		Method	Conditions		Min	Max	
1.	Collector to emitter cutoff current 2N6648 2N6649 2N6650	3041	Bias condition A V_{BE}= 1.5 V dc V_{CE}= -40 V dc V_{CE}= -60 V dc V_{CE}= -80 V dc	I_{CEX1}		-0.3	mA dc
2.	Collector to emitter cutoff current 2N6648 2N6649 2N6650	3041	Bias condition A V_{BE}= 1.5 V dc V_{CE}= -40 V dc V_{CE}= -60 V dc V_{CE}= -80 V dc	I_{CEX3}		-3.0	mA dc
3.	Forward-current transfer ratio	3076	V_{CE}= -3.0 V dc I_C = -5.0 A dc Pulsed (see 4.5.1).	h_{FE2}	1,000	20,000	

1/ The electrical measurements for table IVb (JANTX and JANTXV) of MIL-S-19500 are as follows:

a. Subgroup 2, see table II herein, steps 1 and 3.

b. Subgroup 3, see table II herein, step 2.

c. Subgroup 6, see table II herein, step 2.

2/ The electrical measurements for table V of MIL-S-19500 are as follows:

a. Subgroup 2, see table II herein, steps 1 and 3.

b. Subgroup 3, see table II herein, steps 1 and 3.

c. Subgroup 6, see table II herein, step 2.

Source: https://assist.dla.mil -- Downloaded: 2016-12-04T13:21Z
Check the source to verify that this is the current version before use.

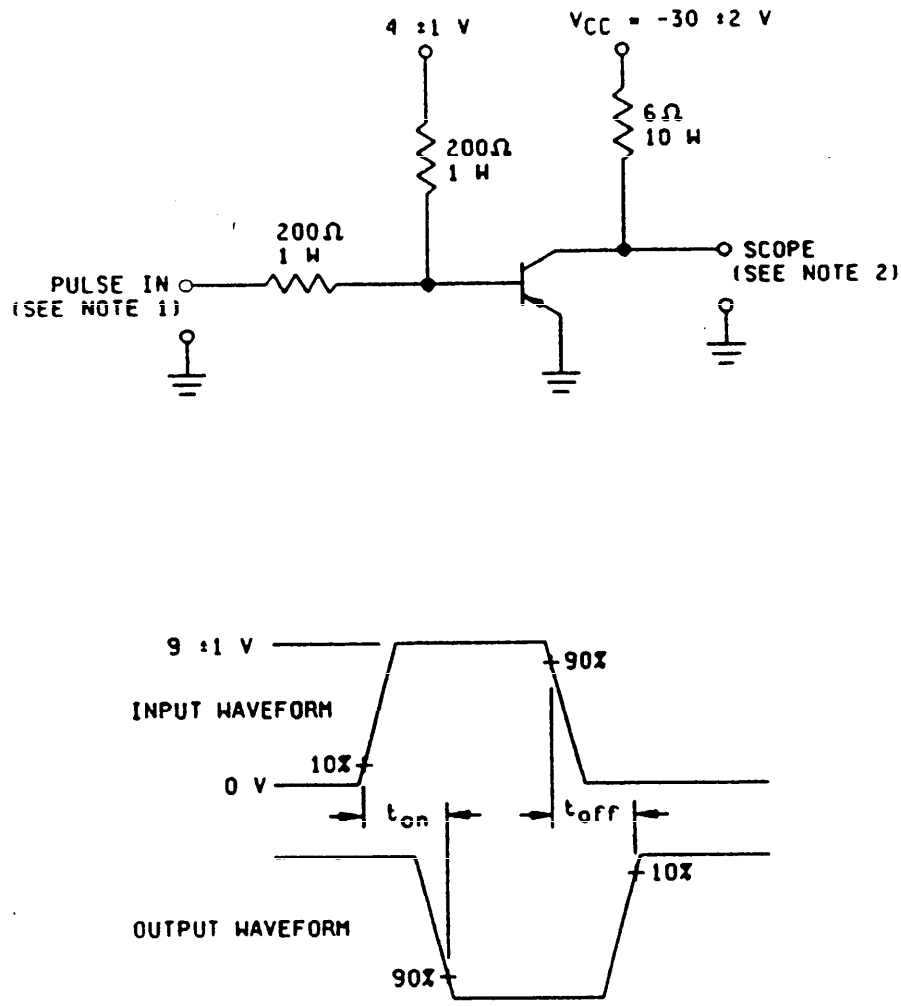

NOTES:

1. The rise time (t_r) and fall time (t_f) of the applied pulse shall be each < 20 nanoseconds; duty cycle < 2%; generator source impedance shall be 50 ohms; pulse width = 20 microseconds.
2. Output sampling oscilloscope: Z_{in} > 100 kohms; C_{in} < 50 pF; rise time < 20 nanoseconds.

FIGURE 2. Pulse response test circuit.

Source: https://assist.dla.mil -- Downloaded: 2016-12-04T13:21Z
Check the source to verify that this is the current version before use.

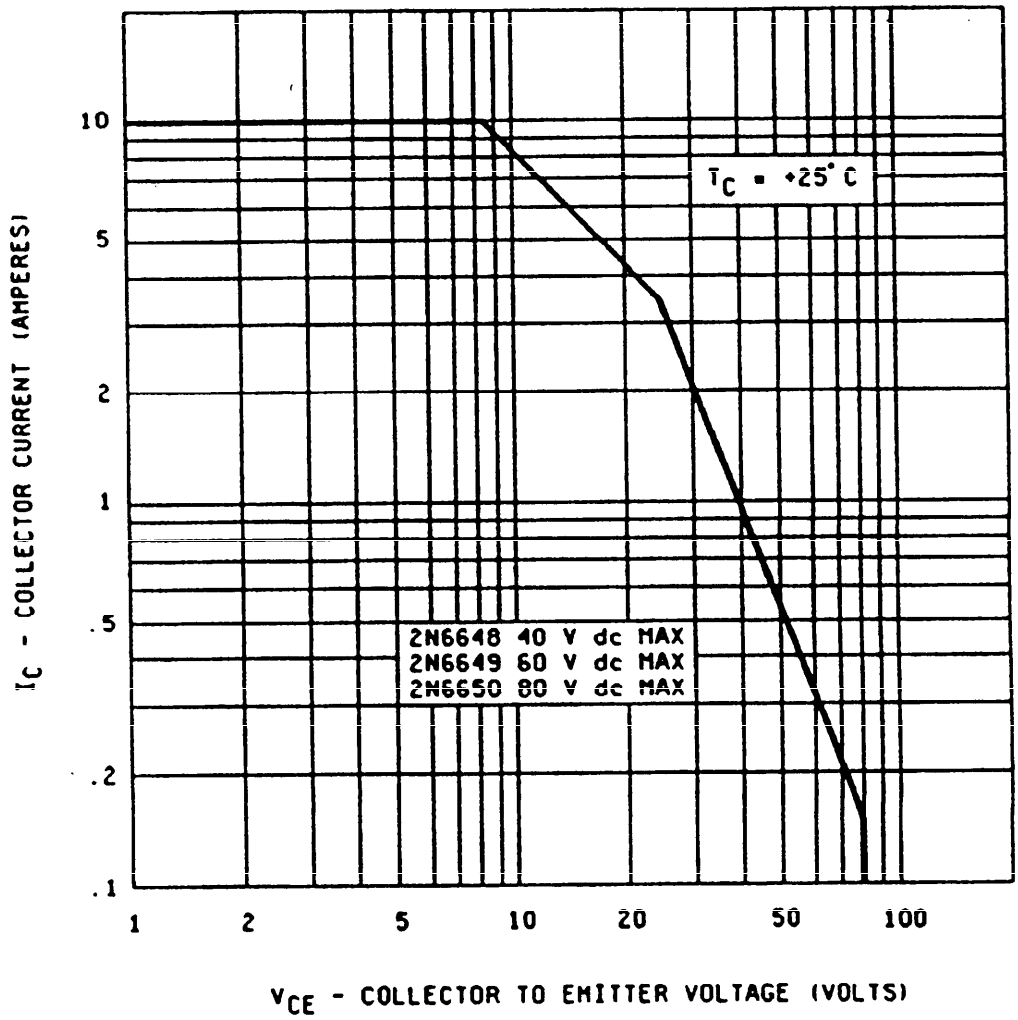

FIGURE 3. Maximum safe operating area graph (continuous dc).

Source: https://assist.dla.mil -- Downloaded: 2016-12-04T13:21Z
Check the source to verify that this is the current version before use.

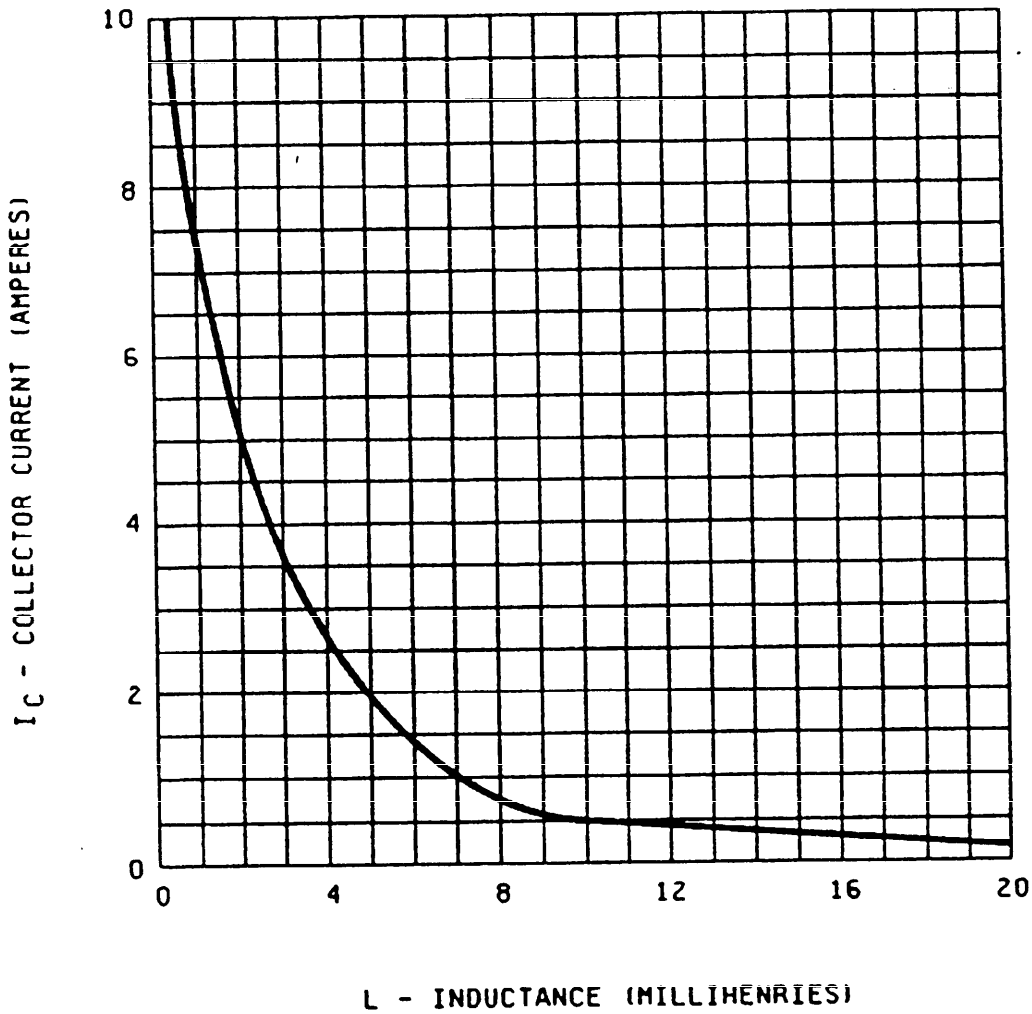

FIGURE 4. Safe operating area for switching between saturation and cutoff (unclamped inductive load).

Source: https://assist.dla.mil -- Downloaded: 2016-12-04T13:21Z
Check the source to verify that this is the current version before use.

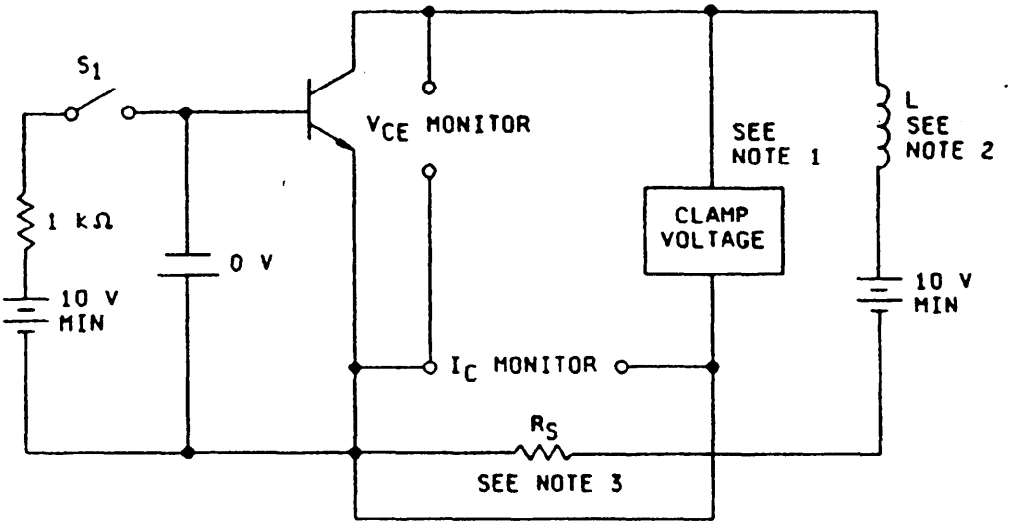

Procedures:

1. With switch S1 closed, set the specified test conditions.
2. Open S1. Device fails if clamp voltage not reached and maintained until the current returns to zero.
3. Perform specified end-point tests.

NOTES:

1. Either a clamping circuit or clamping diode may be used.
2. The coil used shall provide a minimum inductance of .25 mH at 10 A with a maximum dc resistance of .1Ω.
3. $R_S \leq .1\Omega$. 12 W, 1% tolerance maximum (noninductive).

FIGURE 5. Clamped inductive sweep test circuit.

Source: https://assist.dla.mil -- Downloaded: 2016-12-04T13:21Z
Check the source to verify that this is the current version before use.

5. PACKAGING

5.1 Packaging requirements. The requirements for packaging shall be in accordance with MIL-S-19500.

6. NOTES

(This section contains information of a general or explanatory nature that may be helpful, but is not mandatory.)

6.1 Notes. The notes specified in MIL-S-19500 are applicable to this specification.

6.2 Acquisition requirements. Acquisition documents should specify the following:

a. Issue of DODISS to be cited in the solicitation.

b. Lead finish as applicable (see 3.3.1).

c. Type designation and quality product assurance level.

6.3 Changes from previous issue. Marginal notations are not used in this revision to identify changes with respect to the previous issue due to the extensiveness of the changes.

CONCLUDING MATERIAL

Custodians:
Army - ER
Navy - EC
Air Force - 17
NASA - NA

Review activities:
Air Force - 19, 85, 99
DLA - ES

User activities:
Air Force - 13, 15

Preparing activity:
NASA - NA

Agent:
DLA - ES

(Project 5961-1351)

Source: https://assist.dla.mil -- Downloaded: 2016-12-04T13:21Z
Check the source to verify that this is the current version before use.