MILITARY SPECIFICATION

CONNECTORS, ELECTRICAL, CIRCULAR THREADED, HIGH DENSITY, HIGH SHOCK SHIPBOARD, CLASS D GENERAL SPECIFICATION FOR

This specification is approved for use by the Naval Electronic Systems Command, Department of the Navy, and is available for use by all Departments and Agencies of the Department of Defense.

1. SCOPE

1.1 Scope. This specification covers circular electrical connectors with removable crimp front release contacts. These connectors are for use with jacketed cable in shipboard applications.

1.1.1 Temperature. These connectors are rated for specified operation within a temperature range of -55 C (-67 F) to 200 C (392 F). The upper temperature is the maximum internal hot-spot temperature resulting from any combination of electrical load and ambient conditions.

1.1.1.1 Insulation resistance. Insulation resistance limits vary with temperature (see Figure 1).

1.1.1.2 Service life. Service life varies with temperature (see Figure 2 and Table I).

1.2 Classification.

1.2.1 Military part number for connectors. The connector part number for qualified connectors procured in accordance with this specification shall consist of the letter "M", the basic number of the applicable specification sheet and the applicable alphanumeric characters formulated as in the following examples.

M28840/ XX	X	X	X	X	X	X
Basic Part Number	Class Code	Shell Size Designator	Insert Arrangement	Backshell Designator	Contact Style	Key Position
(1.2.1)	(1.2.1.1)	(1.2.1.2)	(1.2.1.3)	(1.2.1.6)	(1.2.1.4)	(1.2.1.5)

Beneficial comments (recommendations, additions, deletions) and any pertinent data which may be of use in improving this document should be addressed to: Naval Electronic Systems Command, Department of the Navy, Washington, DC 20360, by using the self-addressed Standardization Document Improvement Proposal DD Form 1426) appearing at the end of this document or by letter.

FSC 5935

THIS DOCUMENT CONTAINS 45 PAGES.

Source: https://assist.dla.mil -- Downloaded: 2016-11-16T10:03Z
Check the source to verify that this is the current version before use.

TABLE I

Connector Classes - Physical Characteristics

Class Code	Class	Feature	Hot Spot Temperature (°C)	Service Life	Insert Material	Shell and Coupling Ranges		Fluid Resistance
						Material	Finish	
A	D	High Impact Shock	125 200 1/	20 yrs. 1000 hrs.	Fluoro-silicone	Wrought Aluminum	Cadmium olive drab over nickel	Complete
B	DS	High Impact	125 200 1/	20 yrs. 1000 hrs.	"	Carbon Resistant Steel 316	Cadmium	Complete
C	DJ	High Impact shock with backshell connector assembly	125 200 1/	20 yrs. 1000 hrs.	"	Wrought Aluminum	Cadmium olive drab over nickel	Complete
E	DJS	High Impact shock with backshell connector assembly	125 200 1/	20 yrs. 1000 hrs.	"	Carbon Resistant Steel 316	Cadmium	Complete

Note: 1/ Hot spot test requirement for inserts and seals shall be 200°C.

Source: https://assist.dla.mil -- Downloaded: 2016-11-16T10:03Z
Check the source to verify that this is the current version before use.

1.2.1.1 Class code. The class of the connector shall be identified as shown in Table I.

1.2.1.2 Shell sizes. The shell size shall be identified as shown in Table II.

TABLE II
Shell Sizes

Designator	Sizes
A	11
B	13
C	15
D	17
E	19
F	23
G	25
H	29
J	33

1.2.1.3 Insert arrangement. The insert arrangement shall be a single digit indicating the insert pattern in accordance with the applicable insert arrangement in MIL-STD-1698.

1.2.1.4 Contact Styles. The following designators shallidentify the various contact styles.

P- Pin Contacts -20-22
S- Socket Contacts -20-22
D- Pin Contacts -20-28
E- Socket Contacts -20-28
F- Pin Contacts -20-20
G- Socket Contacts -20-20

1.2.1.5 Key position. The key or key way position shall be identified by the appropriate number 1, 2, 3, 4, 5 or 6 in accordance with Figure 3.

1.2.1.6 Backshell designator. The backshell designator shall be identified by the appropriate letter A, B, C, or D in accordance with applicable specification sheets.

1.2.2 Coupling. Connectors shall have a threaded coupling in accordance with Figures 8 and 9.

1.2.3 Receptacle mounting. Receptacle mounting shall be designed as follows:

Flange
Jam Nut

Source: https://assist.dla.mil -- Downloaded: 2016-11-16T10:03Z
Check the source to verify that this is the current version before use.

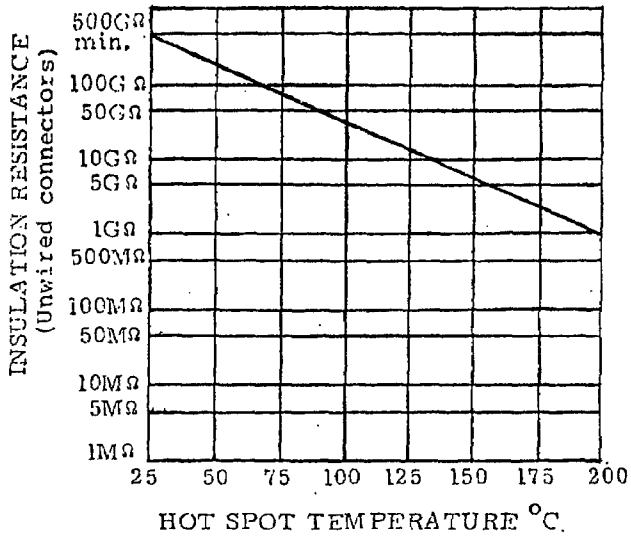

FIGURE 1. Minimum insulation resistance vs. hot spot temperature.

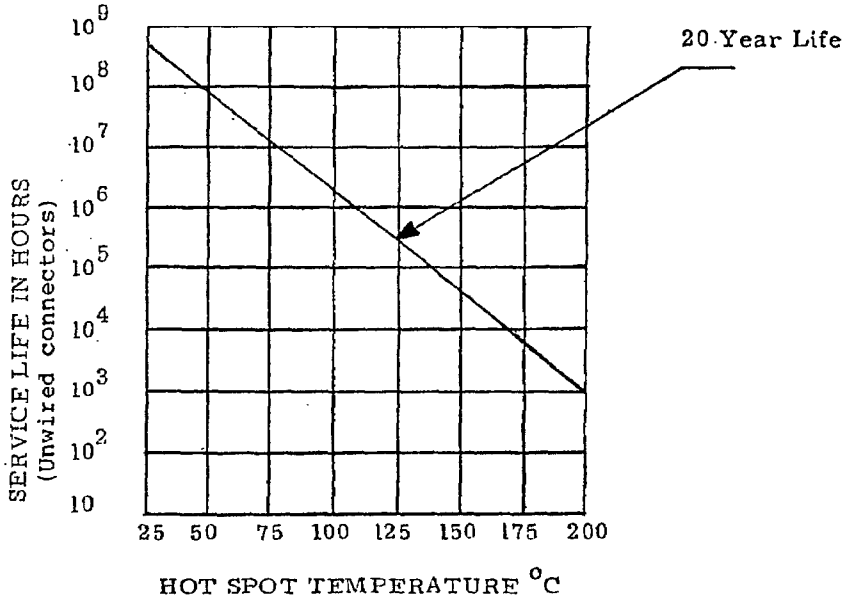

FIGURE 2. Service life vs. hot spot temperature.

Source: https://assist.dla.mil -- Downloaded: 2016-11-16T10:03Z
Check the source to verify that this is the current version before use.

1.2.4 Contact designation. The contact designation shall be as specified in MIL-C-39029.

1.3 Wire range accommodations. The wire ranges given in Table III shall be accommodated by the connectors as indicated.

TABLE III
Wire Range Accommodations

Contact Size	Wire Size	Outside Diameter of Finished Wire (inch) 1/	
		Minimum	Maximum
20-20	24	.040	.070
	22	.040	.070
	20	.040	.070
20-22	26	.040	.070
	24	.040	.070
	22	.040	.070
20-28*	32	.040	.070
	30	.040	.070
	28	.040	.070

* To obtain sealing, wires must be built up to finished wire diameter (see 6.1.1).

1/ In accordance with MIL-C-915 and MIL-W-16878.

2. APPLICABLE DOCUMENTS

2.1 Issues of documents. The following documents of the issue in effect on date of invitation for bids or request for proposal, form a part of this specification to the extent specified herein:

SPECIFICATIONS

FEDERAL

P-D-680 -Dry Cleaning Solvent

QQ-P-416 -Plating, Cadmium (Electrodeposited)

QQ-S-763 -Steel Bars, Wire, Shapes, and Forgings, Corrosion Resisting

TT-I-735 -Isopropyl Alcohol

TT-T-291 -Thinner, Paint, Volatile Spirits (Petroleum-spirits)

MILITARY

MIL-S-901 -Shock Tests II,I (High-Impact): Shipboard Machinery, Equipment and Systems, Requirements for.

MIL-C-915 -Cable and Cord, Electrical for Shipboard Use, General Specification for.

MIL-G-3056 -Gasoline, Automotive, Combat.

Source: https://assist.dla.mil -- Downloaded: 2016-11-16T10:03Z
Check the source to verify that this is the current version before use.

MIL-H-5606	-Hydraulic Fluid, Petroleum Base; Aircraft, Missile, and Ordnance.
MIL-J-5624	-Turbine Fuel, Aviation Grades JP-4 and JP-5.
MIL-L-7808	-Lubricating Oil, Aircraft Turbine Engine, Synthetic Base.
MIL-A-8243	-Anti-icing and De-icing-Defrosting Fluid.
MIL-W-16878	-Wire, Electrical, Insulated, High Temperature.
MIL-I-17214	-Indicator, Permeability; Low-MU (Go-No-Go).
MIL-C-22520	-Crimping Tools, Terminal, Tool Kits, Hand or Power Actuated, Wire Termination, General Specification for.
MIL-L-23699	-Lubricating Oil, Aircraft Turbine Engines, Synthetic Base.
MIL-C-25769	-Cleaning Compound, Aircraft Surface; Alkaline Waterbase.
MIL-C-39029	-Contacts, Electrical Connector, General Specification for.
MIL-C-39029/83	-Contacts, Electrical Connector, Pin Crimp Removal.
MIL-C-39029/84	-Contacts, Electrical Connector. Socket, Crimp Removal.
MIL-C-55330	-Connectors, Preparation for Delivery of.
MIL-I-81969	-Installing and Removal Tools, Connector, Electrical Contact, General Specification for.
MIL-I-81969/33	-Installing and Removal Tools, Connector, Electrical Contact, Type I, Class 1, Composition A.
MIL-I-81969/34	-Installing and Removal Tools, Connector, Electrical Contact, Type II, Class 1, Composition A.

STANDARDS

FEDERAL

FED-STD-H28	-Screw Thread Standards for Federal Services.

MILITARY

MIL-STD-105	-Sampling Procedures and Tables for Inspection by Attributes.
MIL-STD-167-1	-Mechanical Vibrations of Shipboard Equipment (Type I Environmental and Type II - Internally Excited).
MIL-STD-202	-Test Methods for Electronic and Electric Component Parts.
MIL-STD-454	-Standard General Requirements for Electronic Equipment.
MIL-STD-1285	-Marking of Electrical and Electronic Parts.
MIL-STD-1344	-Test Methods for Electrical Connectors.
MIL-STD-1373	-Screw Thread, Modified, 60 Degree Stub, Double.

Source: https://assist.dla.mil -- Downloaded: 2016-11-16T10:03Z
Check the source to verify that this is the current version before use.

MIL-STD-1646 -Servicing Tools for Electric Contacts and Connections, Selection and Use of.

MIL-STD-1683 -Connectors and Jacketed Cable, Electric, Selection Standard for Shipboard Use.

MIL-STD-1698 -Insert Arrangements for MIL-C-28840 High Density, High Shock, Circular, Electrical Connectors.

MIL-STD-45662 -Calibration System Requirements.

MS 27186 -Plug, End, Seal, Electrical Connector.

(See Supplement for list of applicable specification sheets)

(Copies of specifications, standards, drawings, and publications required by suppliers in connection with specific procurement functions should be obtained from the procuring activity or as directed by the contracting officer.)

3.0 REQUIREMENTS

3.1 Specification Sheets. The individual item requirements shall be as specified herein and in accordance with the applicable specification sheets. In the event of conflict between the requirements of this specification and the specification sheet, the latter shall govern.

3.2 Qualification. The connectors and accessories furnished under this specification shall be products which are qualified for listing on the applicable qualified products list (QPL) at the time set for opening bids (See 4.3 and 6.3).

3.3 Materials. Materials shall be suitable for the purpose intended and where required herein shall be as specifically described.

3.3.1 Dissimilar metals. When dissimilar metals are employed in intimate contact with each other in a connector or in a mated pair of connectors, suitable protection against electrolytic corrosion shall be provided as specified in Requirement 16 of MIL-STD-454.

3.3.2 Nonmagnet materials. All parts shall be made of materials considered to be nonmagnetic. (See 3.6)

3.3.3 Contact materials. Contacts shall be made of suitable conductive copper based alloy in accordance with MIL-C-39029.

3.3.4 Dielectric materials.

3.3.4.1 Inserts. Inserts shall be hard dielectric glass filled epoxy and shall have the hardness, electrical, and mechanical characteristics suitable for the purpose intended.

3.3.4.1.1 Resilient materials. Resilient materials shall be 100 percent fluorosilicone and have the Shore A durometer specified as follows:

Pin Insert Face	70 ± 5
Socket Insert	70 ± 5
Gaskets	40 ± 5
Grommets	50 ± 5
O-Rings	60 ± 5
Wire Separator	50 ± 5

3.3.4.1.2 Connectors. The mating faces of inserts shall be resilient material with a Shore A Durometer as specified in 3.3.4.1.1 with a total (pin and socket insert face) minimum thickness of 0.090 inch.

Source: https://assist.dla.mil -- Downloaded: 2016-11-16T10:03Z
Check the source to verify that this is the current version before use.

3.3.5 Shells and coupling rings. Shells and coupling rings shall consist of the following materials as specified herein (See 1.2.1.1):

a. Heat-treated wrought aluminum alloy meeting the performance requirements of this specification.

b. Non-magnetic corrosion-resisting steel in accordance with QQ-S-763, Class 316.

3.3.5.1 Finish. The resultant finish on all connectors shall be electrically conductive.

a. The finish of connectors and external screws with wrought aluminum shells and coupling rings shall be cadmium plate in accordance with QQ-P-416, Type II, Class 3 over nickel. The resultant finish on cadmium plated connectors shall be olive drab (light to dark).

b. The finish of connectors with corrosion-resisting steel shells and coupling rings shall be cadmium plate in accordance with QQ-P-416, Type II, Class 3, color - black.

c. Spring fingers - Shell spring fingers shall be suitably protected to prevent corrosion.

External screws may be stainless steel in lieu of the finish specified.

3.4 Design and construction. Connectors and accessories shall be designed and constructed to withstand normal handling incident to installation and maintenance in service. The connectors and accessories shall conform to the following:

Connector, Position Key and Key Way,	Figure 3
Plug Interface Dimensions,	Figure 4
Receptacle Interface Dimensions,	Figure 5
Connector Back-end Configuration,	Figure 6
Rear Accessory Design Standard,	Figure 7
Connector Mating Threads, Internal	Figure 8
Connector Mating Threads, External	Figure 9

3.4.1 Contacts. Contacts shall conform to MIL-C-39029. Contacts shall be designed so that neither the pin nor the socket contact shall be damaged during mating of counterpart connectors. A quantity of crimp contacts consisting of the normal complement, plus 5 percent, but not less than two, shall be included in the unit package. For other than direct shipments to the Government, connectors may be ordered without contacts, thus allowing contacts to be purchased in bulk (See 6.2).

3.4.1.1 Contacts. Contacts shall be designed to prevent damage to the contact retention device or sealing member during insertion and removal of the contact. Contacts shall conform to MIL-C-39029/83 and MIL-C-39029/84 and be qualified to MIL-C-39029.

3.4.1.2 Installing and removal tools. The individual contacts shall be positively retained in the connector when installed with the MIL-I-81969/33 contact installing tool. The individual contacts shall be capable of being removed from the connector when using the MIL-I-81969/34 contact removal tool.

3.4.2 Insert design and construction. Inserts shall be of voidless construction, keyed and bonded and secured to prevent rotation within the shell.

3.4.2.1 Insert retention.

Source: https://assist.dla.mil -- Downloaded: 2016-11-16T10:03Z
Check the source to verify that this is the current version before use.

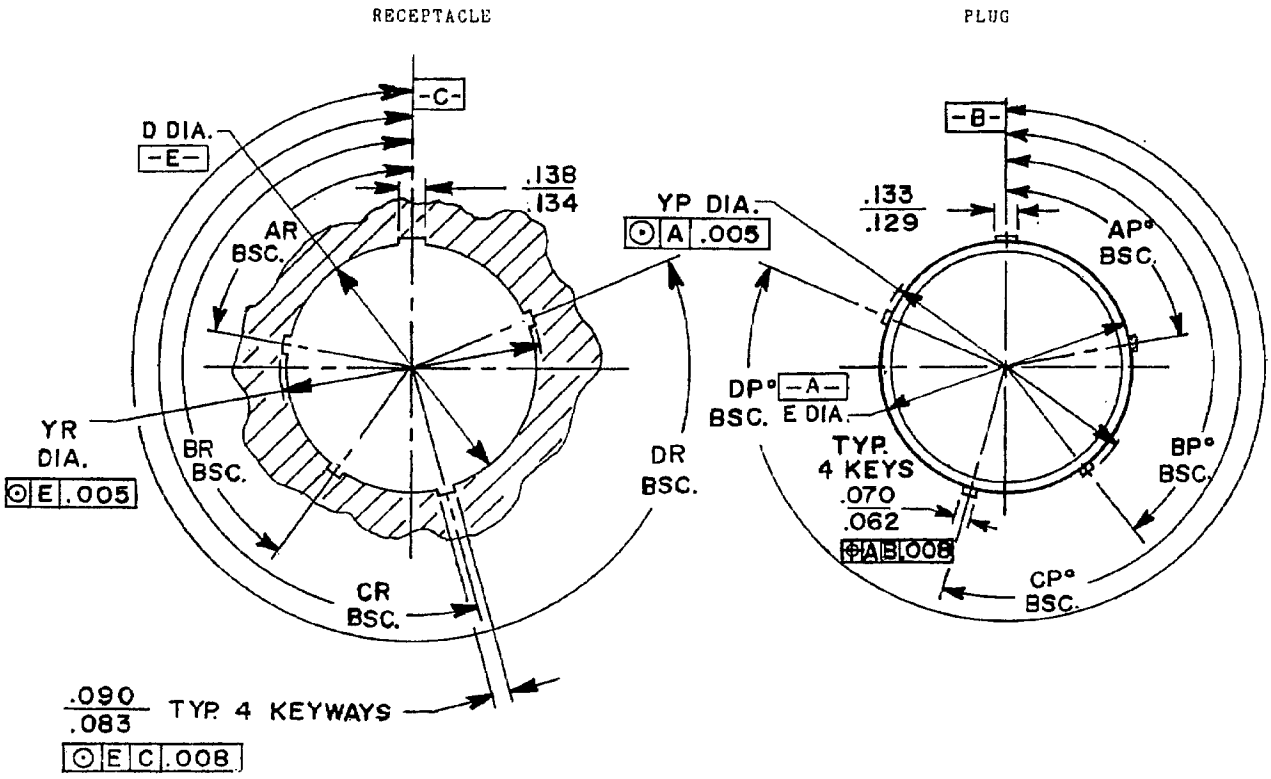

INCHES	MM
.005	0.13
.008	0.20
.062	1.57
.070	1.78
.083	2.11
.090	2.29
.129	3.28
.133	3.38
.134	3.40
.138	3.50

Figure 3 , Connector, electrical, position key and keyways, mating

Source: https://assist.dla.mil -- Downloaded: 2016-11-16T10:03Z
Check the source to verify that this is the current version before use.

DESIGNATOR 1/	KEY & KEYWAY ARRANGEMENT	AR° or AP° BSC	BR° or BP° BSC	CR° or CP° BSC	DR° or DP° BSC	YP DIA.	YR DIA.
A (11)	1	95	141	208	236	.559 (14.20)	.581 (14.76)
	2	113	156	182	292	.551 (14.00)	.569 (14.45)
	3	90	145	195	252		
B (13)	4	53	156	220	255	.683 (17.35)	.705 (17.91)
	5	119	146	176	298	.675 (17.14)	.693 (17.60)
	6	51	141	184	242		
C (15) & D (17)	1	80	142	196	293	.855 (21.72)	.877 (22.28)
	2	135	170	200	310	.847 (21.51)	.865 (21.97)
	3	49	169	200	244		
	4	66	140	200	257	.925 (23.50)	.947 (24.05)
	5	62	145	180	280	.917 (23.29)	.935 (23.75)
	6	79	153	197	272		
E (19)	1	80	142	196	293	1.092 (27.74)	1.114 (28.30)
F (23)	2	135	170	200	310	1.084 (27.53)	1.102 (27.99)
G (25)	3	49	169	200	244	1.277 (32.44)	1.299 (32.99)
H (29) & J (33)	4	66	140	200	257	1.269 (32.23)	1.287 (32.69)
	5	62	145	180	280	1.438 (36.52)	1.460 (37.08)
	6	79	153	197	272	1.430 (36.32)	1.448 (36.78)
						1.604 (40.74)	1.626 (41.30)
						1.596 (40.54)	1.614 (41.00)
						1.796 (45.62)	1.818 (46.18)
						1.788 (45.42)	1.806 (45.87)

NOTES:

1. Shell sizes are provided within parentheses for information and are not a part of the designator.
2. Dimensions are in inches.
3. Millimeters are in parentheses.
4. Metric equivalents (to the nearest .01 mm) are given for general information only and are based upon 1 inch equals 25.4 mm.
5. Diminsions apply after plating.
6. For datum A and E refer to figures 4 and 5 respectively.

FIGURE 3. Connector, electrical, position key and keyways, mating.

Source: https://assist.dla.mil -- Downloaded: 2016-11-16T10:03Z
Check the source to verify that this is the current version before use.

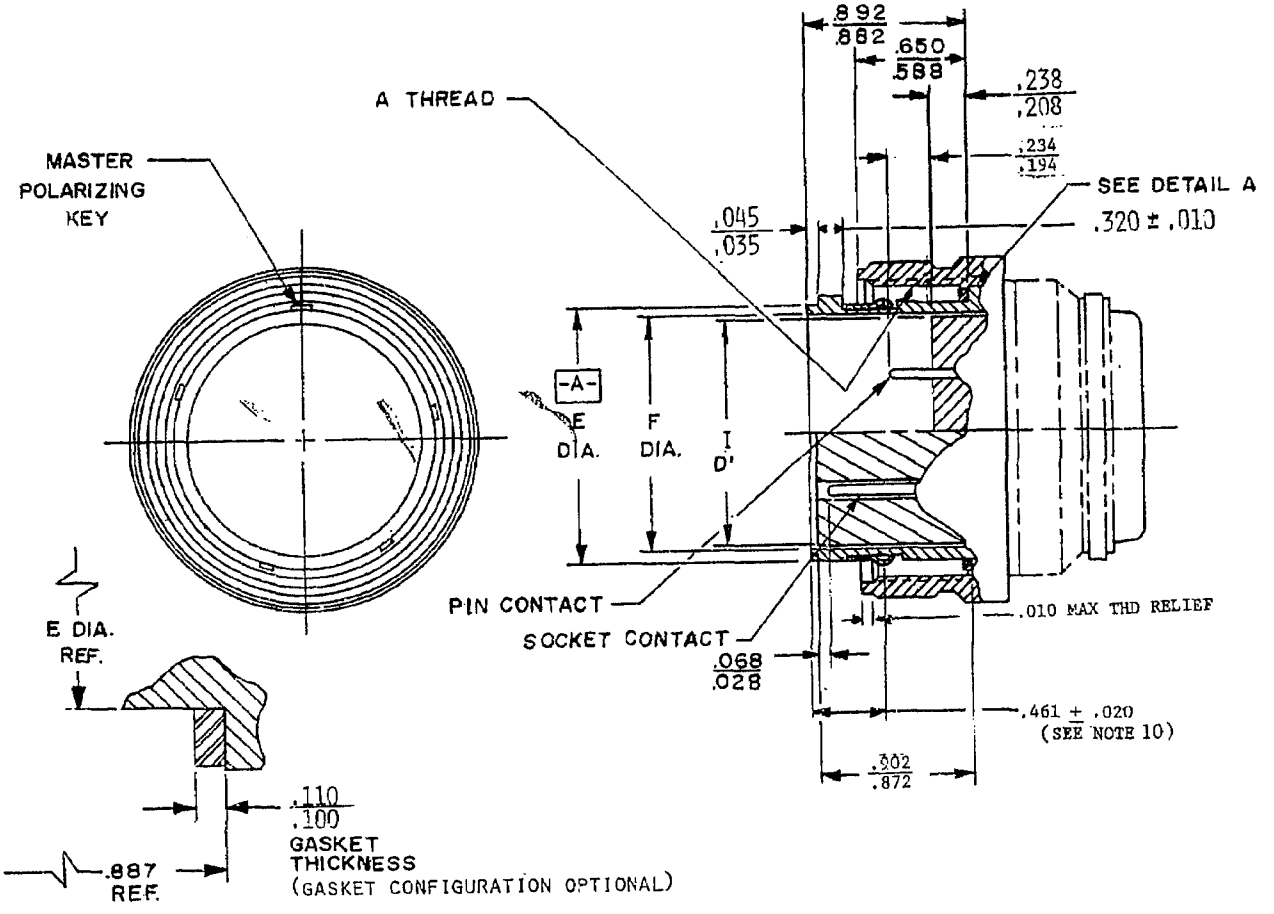

INCHES	MM	INCHES	MM
.010	0.26	.238	6.04
.020	0.52	.320	8.13
.028	0.71	.461	11.72
.035	0.89	.588	14.94
.045	1.14	.650	16.51
.068	1.73	.872	22.15
.100	2.54	.882	22.40
.110	2.79	.887	22.53
.194	4.93	.892	22.66
.208	5.28	.902	22.91
.234	5.94		

FIGURE 4. Connector, plug, electrical, interface dimensions.

Source: https://assist.dla.mil -- Downloaded: 2016-11-16T10:03Z
Check the source to verify that this is the current version before use.

DESIGNATOR 1/	A THREAD CLASS 2B	E DIA.	F DIA.	I DIA.
A (11)	.750-.1P-.2L-D.S.	.502 (12.75) .492 (12.50)	.381 (9.68) .371 (9.42)	.367 (9.32) .352 (8.94)
B (13)	.875-.1P-.2L-D.S.	.626 (15.90) .616 (15.65)	.503 (12.78) .493 (12.52)	.489 (12.42) .474 (12.04)
C (15)	1.062-.1P-.2L-D.S.	.798 (20.27) .788 (20.02)	.681 (17.30) .671 (17.04)	.667 (16.94) .652 (16.56)
D (17)	1.125-.1P-.2L-D.S.	.868 (22.05) .858 (21.79)	.758 (19.25) .748 (19.00)	.744 (18.90) .729 (18.52)
E (19)	1.312-.1P-.2L-D.S.	1.035 (26.29) 1.025 (26.04)	.902 (22.91) .892 (22.66)	.888 (22.56) .873 (22.17)
F (23)	1.500-.1P-.2L-D.S.	1.220 (30.99) 1.210 (30.73)	1.087 (27.61) 1.077 (27.36)	1.073 (27.25) 1.058 (26.87)
G (25)	1.625-.1P-.2L-D.S.	1.381 (35.08) 1.371 (34.82)	1.276 (32.41) 1.266 (32.16)	1.262 (32.05) 1.247 (31.67)
H (29)	1.812-.1P-.2L-D.S.	1.547 (39.29) 1.537 (39.04)	1.427 (36.25) 1.417 (35.99)	1.412 (35.86) 1.397 (35.48)
J (33)	2.000-.1P-.2L-D.S.	1.739 (44.17) 1.729 (43.92)	1.625 (41.28) 1.615 (41.02)	1.610 (40.89) 1.595 (40.51)

NOTES:

1. Shell sizes are provided within parentheses for information only and are not a part of the designator.
2. Dimensions are in inches.
3. Millimeters are in parentheses.
4. Metric equivalents (to the nearest .01 mm) are given for general information only and are based upon 1 inch - 25.4 mm.
5. Dimensions apply after plating.
6. Mating key positions and dimensions are shown in figure 3.
7. This design information establishes connector intermating criteria and interchangeability of accessory hardware.
8. Rear end connector design for attachment of non-rotatable accessory hardware is shown on figure 6.
9. Dimension includes contact slack.
10. Distance from front of plug barrel to the point at which the guage ring having the same nominal inside diameter as the receptacle shell first engages the spring member.

FIGURE 4. Connector, plug, electrical, interface dimensions. (continued)

Source: https://assist.dla.mil -- Downloaded: 2016-11-16T10:03Z
Check the source to verify that this is the current version before use.

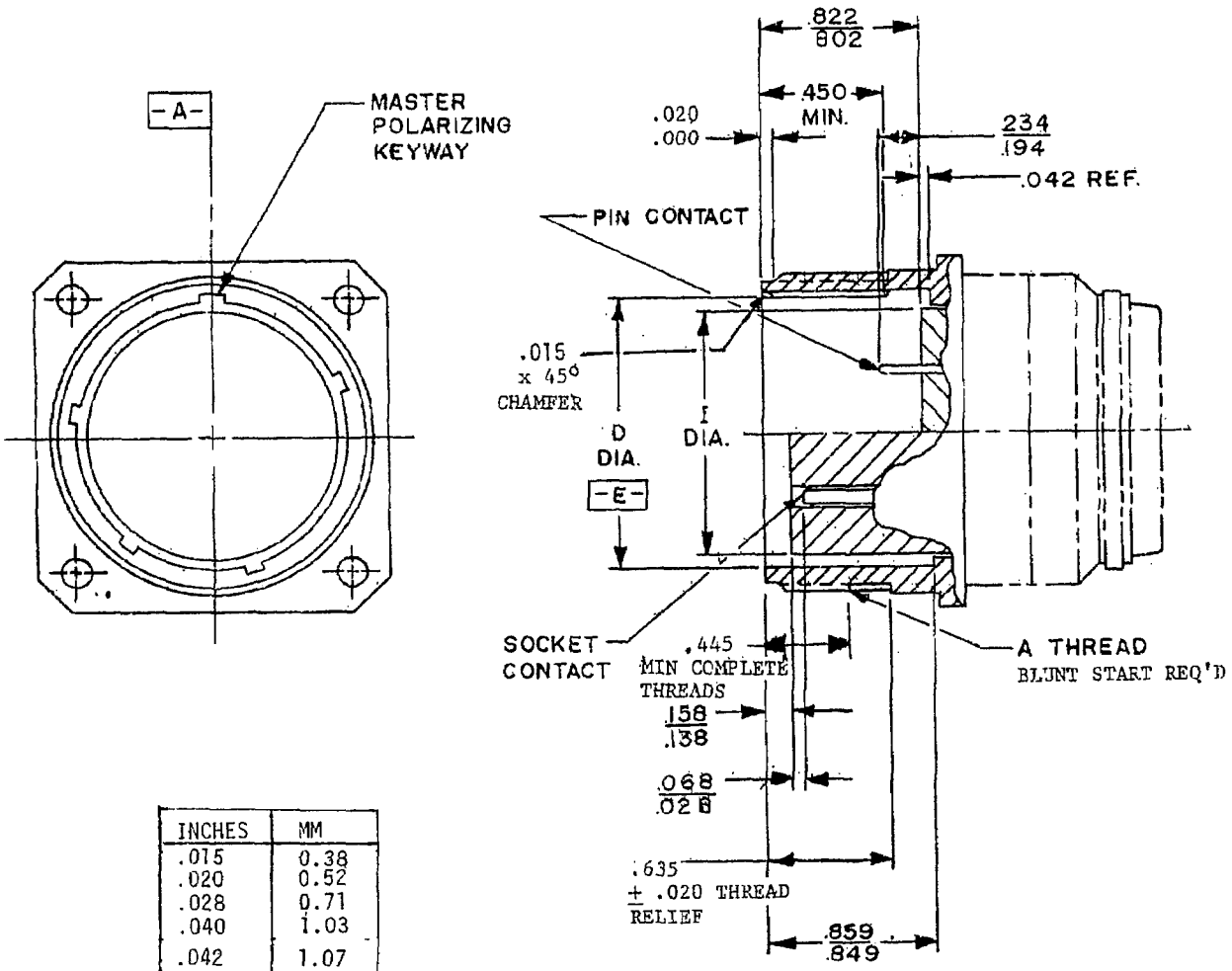

INCHES	MM
.015	0.38
.020	0.52
.028	0.71
.040	1.03
.042	1.07
.068	1.73
.138	3.51
.158	4.01
.194	4.93
.234	5.94
.445	11.31
.450	11.43
.635	16.14
.802	20.37
.822	20.88
.849	21.56
.859	21.82

FIGURE 5. Connector, receptacle, electrical, interface dimensions.

Source: https://assist.dla.mil -- Downloaded: 2016-11-16T10:03Z
Check the source to verify that this is the current version before use.

DESIGNATOR 1/	A-THREAD CLASS 2A	B MIN. THREAD	D DIA.	I DIA.
A (11)	.750-.1P-.2L-D.S.	.625 (15.88)	.513 (13.03) .504 (12.80)	.367 (9.32) .352 (8.94)
B (13)	.875-.1P-.2L-D.S.	.625 (15.88)	.637 (16.18) .628 (15.95)	.489 (12.42) .474 (12.04)
C (15)	1.062-.1P-.2L-D.S.	.625 (15.88)	.809 (20.55) .800 (20.32)	.667 (16.94) .652 (16.56)
D (17)	1.125-.1P-.21-D.S.	.625 (15.88)	.879 (22.33) .870 (22.10)	.744 (18.90) .729 (18.52)
E (19)	1.312-.1P-.2L-D.S.	.625 (15.88)	1.046 (26.57) 1.037 (26.34)	.888 (22.56) .873 (22.17)
F (23)	1.500-.1P-.2L-D.S.	.625 (15.88)	1.231 (31.27) 1.222 (31.04)	1.073 (27.25) 1.058 (26.87)
G (25)	1.625-.1P-.2L-D.S.	.625 (15.88)	1.392 (35.36) 1.383 (35.13)	1.262 (32.05) 1.247 (31.67)
H (29)	1.812-.1P-.2L-D.S.	.625 (15.88)	1.558 (39.57) 1.549 (39.34)	1.412 (35.86) 1.397 (35.48)
J (33)	2.000-.1P-.2L-D.S.	.625 (15.88)	1.750 (44.45) 1.741 (44.22)	1.610 (40.89) 1.595 (40.51)

NOTES:

1. Shell sizes are provided within parentheses for information only and are not a part of the designator.
2. Dimensions are in inches.
3. Millimeters are in parentheses.
4. Metric equivalents (to the nearest .01mm) are given for general information only and are based upon 1 inch = 25.4 mm.
5. Dimensions apply after plating.
6. Mating keyway positions and dimensions are shown in figure 3.
7. This design information establishes connector intermating criteria and interchangeability of accessory hardware.
8. Rear end connector design for attachment of non-rotatable accessory hardware is shown on figure 6.
9. Dimensions include contact slack.

FIGURE 5. Connector, receptacle, electrical, interface dimensions. (continued)

Source: https://assist.dla.mil -- Downloaded: 2016-11-16T10:03Z
Check the source to verify that this is the current version before use.

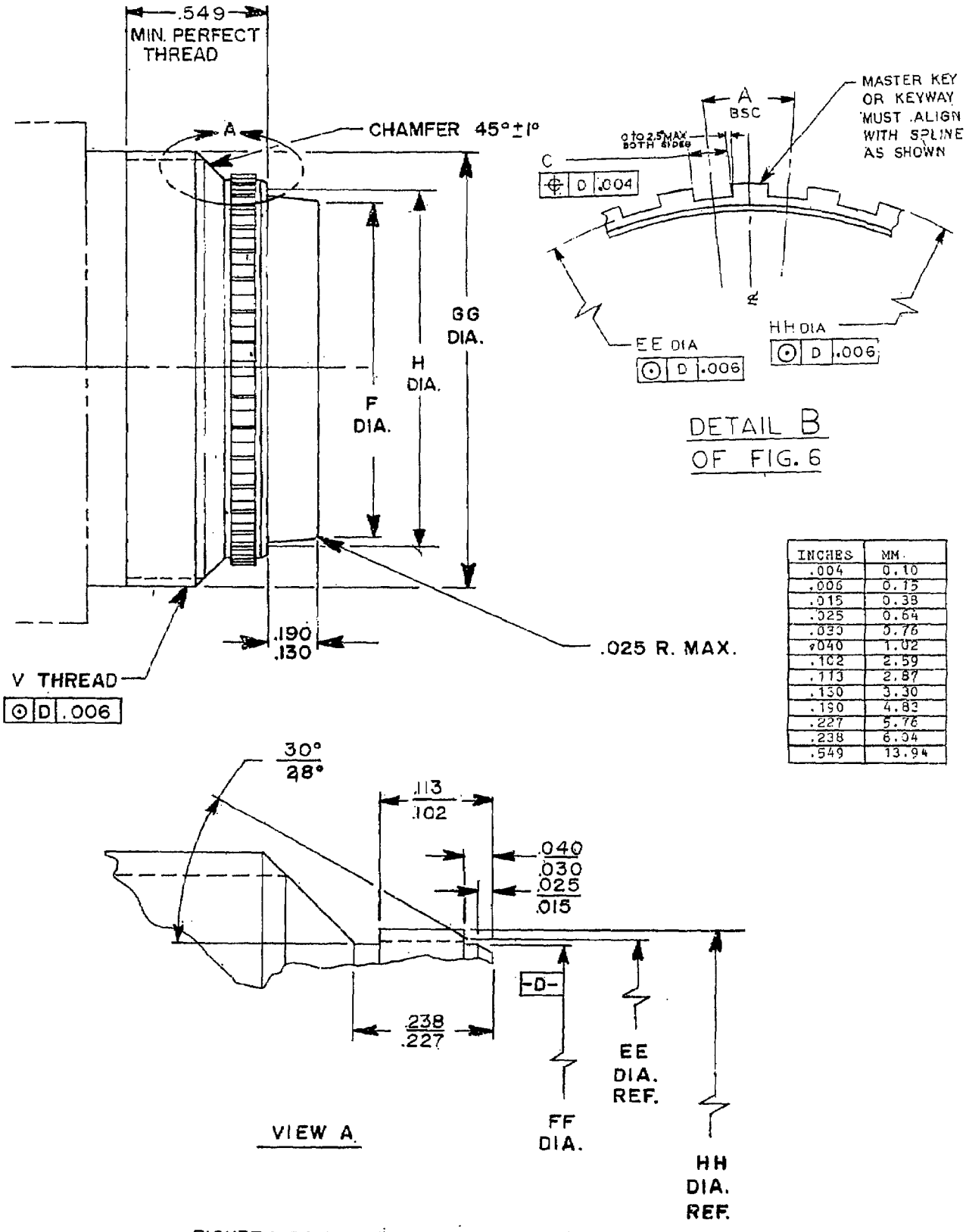

INCHES	MM
.004	0.10
.006	0.15
.015	0.38
.025	0.64
.030	0.76
.040	1.02
.102	2.59
.113	2.87
.130	3.30
.190	4.83
.227	5.76
.238	6.04
.549	13.94

FIGURE 6. CONNECTOR BACK-END CONFIGURATION.

Source: https://assist.dla.mil -- Downloaded: 2016-11-16T10:03Z
Check the source to verify that this is the current version before use.

DESIGNATOR 1/	A BSC	C	F DIA.	H DIA. MAX. GROMMET	V THREAD CLASS 2A	EE DIA.	FF DIA.	GG DIA. MAX.	HH DIA.
A (11)	20°	.0515(1.31) .0465(1.18)	.388(9.86) .358(9.09)	.447(11.35)	3/4-20 UNEF	.549(13.94) .543(13.79)	.540(13.72) .534(13.56)	.755(19.18)	.573(14.55) .567(14.40)
B (13)	20°	.0615(1.56) .0565(1.44)	.523(13.28) .493(12.52)	.582(14.78)	7/8-20 UNEF	.664(16.87) .658(16.71)	.655(16.64) .649(16.48)	.880(22.35)	.688(17.48) .682(17.32)
C (15)	18°	.0660(1.68) .0610(1.55)	.680(17.27) .650(16.51)	.727(18.47)	1-20 UNEF	.799(20.29) .793(20.14)	.790(20.07) .784(19.91)	1.005(25.53)	.823(20.90) .817(20.75)
D (17)	15°	.0630(1.60) .0580(1.47)	.765(19.43) .735(18.67)	.824(20.93)	1 1/8-18 UNEF	.906(23.01) .900(22.86)	.897(22.78) .891(22.63)	1.130(28.70)	.930(23.62) .924(23.47)
E (19)	15°	.0720(1.83) .0670(1.70)	.897(22.78) .867(22.02)	.956(24.28)	1 1/4-18 UNEF	1.041(26.44) 1.035(26.29)	1.032(26.21) 1.026(26.06)	1.255(31.88)	1.065(27.05) 1.059(26.90)
F (23)	12°	.0680(1.73) .0630(1.60)	1.094(27.79) 1.064(27.02)	1.153(29.29)	1 7/16-18 UNEF	1.228(31.19) 1.222(31.04)	1.219(30.96) 1.213(30.81)	1.443(36.65)	1.252(31.80) 1.246(31.65)
G (25)	10°	.0645(1.64) .0595(1.51)	1.261(32.03) 1.231(31.27)	1.322(33.58)	1 9/16-18 UNEF	1.388(35.26) 1.382(35.10)	1.379(35.03) 1.373(34.87)	1.567(39.80)	1.412(35.86) 1.406(35.71)
H (29)	9°	.0680(1.73) .0630(1.60)	1.463(37.16) 1.433(36.40)	1.522(38.66)	1 7/8-16 UN	1.639(41.63) 1.633(41.48)	1.630(41.40) 1.624(41.25)	1.880(47.75)	1.663(42.24) 1.657(42.09)
J (33)	8°	.0680(1.73) .0630(1.60)	1.661(42.19) 1.631(41.43)	1.720(43.69)	2 1/16-16 N	1.834(46.58) 1.828(46.43)	1.825(46.36) 1.819(46.20)	2.067(52.50)	1.858(47.19) 1.852(47.04)

NOTES:

1. Shell sizes are provided within parentheses for information only and are not a part of the designator.
2. Dimensions are in inches.
3. Dimensions apply after plating.

FIGURE 6, CONNECTOR BACK - END CONFIGURATION

Source: https://assist.dla.mil -- Downloaded: 2016-11-16T10:03Z
Check the source to verify that this is the current version before use.

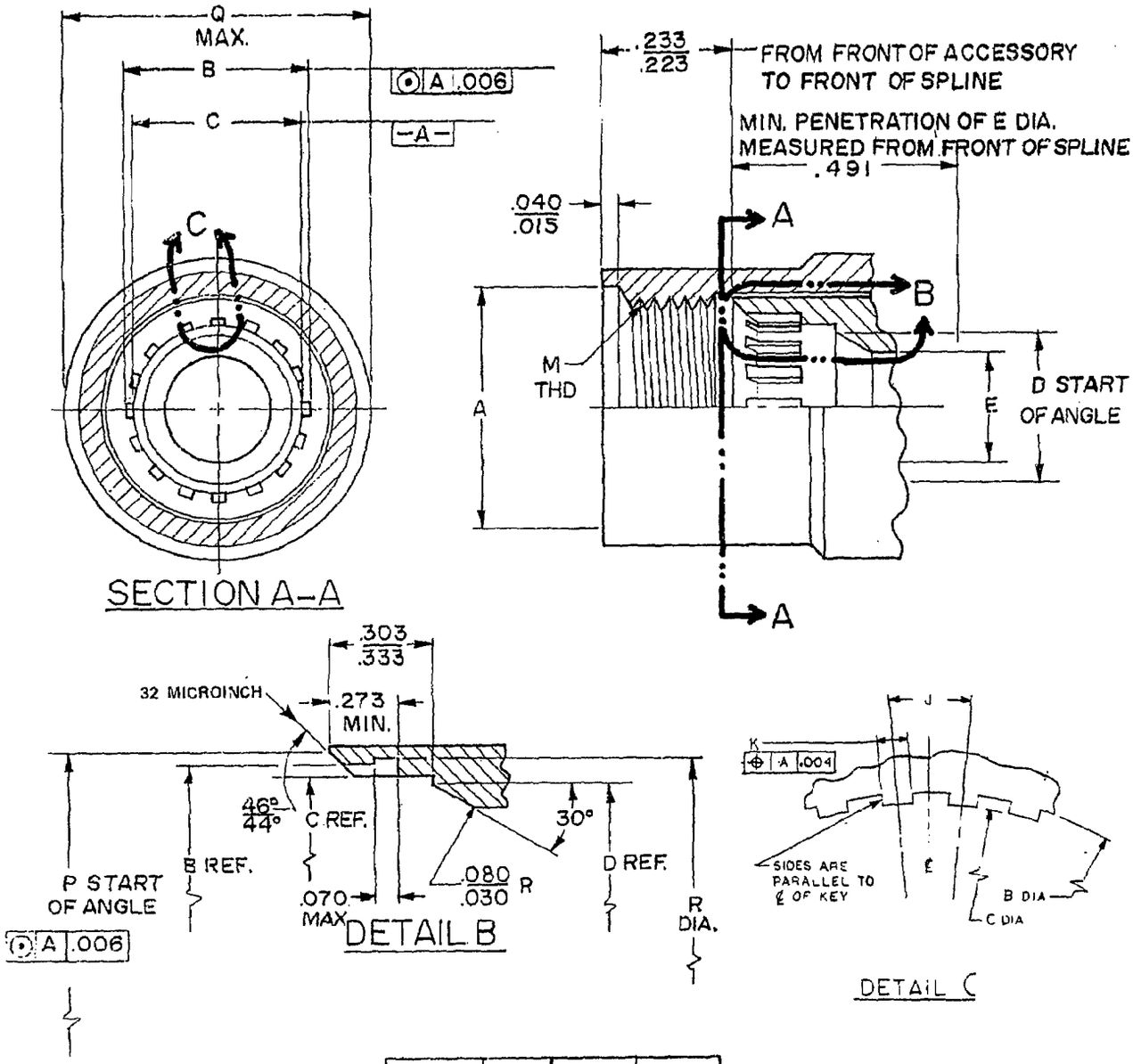

INCHES	MM	INCHES	MM
.006	.15	.233	5.92
.015	.38	.273	6.93
.030	.76	.303	7.70
.040	1.02	.333	8.46
.070	1.78	.491	12.47
.080	2.03		
.223	5.67		

FIGURE 7. Connector, electrical, rear accessory design standard.

Source: https://assist.dla.mil -- Downloaded: 2016-11-16T10:03Z
Check the source to verify that this is the current version before use.

DESIGNATOR 1/	A DIA.	B DIA.	C DIA.	D DIA.	J BSC	K
A (11)	.770 (19.56) .750 (19.05)	.583 (14.81) .579 (14.71)	.556 (14.12) .553 (14.05)	.447 (11.35) .427 (10.84)	20°	.0445 (1.13) .0425 (1.08)
B (13)	.895 (22.73) .875 (22.22)	.698 (17.73) .694 (17.63)	.671 (17.04) .668 (16.97)	.582 (14.78) .562 (14.27)	20°	.0545 (1.38) .0525 (1.33)
C (15)	1.020 (25.91) 1.000 (25.40)	.833 (21.16) .829 (21.06)	.806 (20.47) .803 (20.40)	.727 (18.47) .707 (17.96)	18°	.0590 (1.50) .0570 (1.45)
D (17)	1.145 (29.08) 1.125 (28.58)	.940 (23.88) .936 (23.77)	.913 (23.19) .910 (23.11)	.824 (20.93) .804 (20.42)	15°	.0560 (1.42) .0540 (1.37)
E (19)	1.270 (32.26) 1.250 (31.75)	1.075 (27.30) 1.071 (27.20)	1.048 (26.62) 1.045 (26.54)	.956 (24.28) .936 (23.77)	15°	.0650 (1.65) .0630 (1.60)
F (23)	1.458 (37.03) 1.438 (36.52)	1.262 (32.05) 1.258 (31.95)	1.235 (31.37) 1.232 (31.29)	1.153 (29.29) 1.133 (28.78)	12°	.0610 (1.55) .0590 (1.50)
G (25)	1.582 (40.18) 1.562 (39.67)	1.422 (36.12) 1.418 (36.02)	1.395 (35.43) 1.392 (35.36)	1.285 (32.64) 1.265 (32.13)	10°	.0575 (1.46) .0555 (1.41)
H (29)	1.895 (48.13) 1.875 (47.62)	1.673 (42.49) 1.669 (42.39)	1.646 (41.81) 1.643 (41.73)	1.522 (38.66) 1.502 (38.15)	9°	.0610 (1.55) .0590 (1.50)
J (33)	2.082 (52.88) 2.062 (52.37)	1.868 (47.45) 1.864 (47.34)	1.841 (46.76) 1.838 (46.68)	1.720 (43.69) 1.700 (43.18)	8°	.0610 (1.55) .0590 (1.50)

DESIGNATOR 1/	E DIA.	M THREAD CLASS 2B	P DIA.	Q DIA. MAX.	R DIA. MAX.
A (11)	.367 (9.32) .357 (9.07)	3/4 -20 UNEF	.658 (16.71) .652 (16.56)	1.028 (26.11)	.588 (14.94)
B (13)	.502 (12.75) .492 (12.50)	7/8 -20 UNEF	.773 (19.63) .767 (19.48)	1.141 (28.98)	.703 (17.86)
C (15)	.647 (16.43) .637 (16.18)	1 -20 UNEF	.908 (23.06) .902 (22.91)	1.263 (32.08)	.838 (21.28)
D (17)	.744 (18.90) .734 (18.64)	1 1/8 -18 UNEF	1.015 (25.78) 1.009 (25.63)	1.387 (35.23)	.945 (24.00)
E (19)	.876 (22.25) .866 (22.00)	1 1/4 -18 UNEF	1.150 (29.21) 1.144 (29.06)	1.513 (38.43)	1.080 (27.43)
F (23)	1.073 (27.25) 1.063 (27.00	1 7/16-18 UNEF	1.337 (33.96) 1.331 (33.81)	1.703 (43.26)	1.267 (32.18)
G (25)	1.205 (30.61) 1.195 (30.35)	1 9/16-18 UNEF	1.473 (37.41) 1.467 (37.26)	1.825 (46.36)	1.427 (36.24)
H (29)	1.442 (36.63) 1.432 (36.37)	1 7/8 -16 UN	1.748 (44.40) 1.742 (44.25)	2.143 (54.43)	1.678 (42.62)
J (33)	1.640 (41.66) 1.630 (41.40)	2 1/16-16 N	1.943 (49.35) 1.937 (49.20)	2.329 (59.16)	1.873 (47.57)

NOTES:

1. Shell sizes are provided within parentheses for information only and are not a part of the designator.
2. Dimensions are in inches.
3. Dimensions apply after plating.
4. The coupling nut shall be captive and free to rotate on accessory.

FIGURE 7. Connector, electrical, rear accessory design standard. (Continued)

Source: https://assist.dla.mil -- Downloaded: 2016-11-16T10:03Z
Check the source to verify that this is the current version before use.

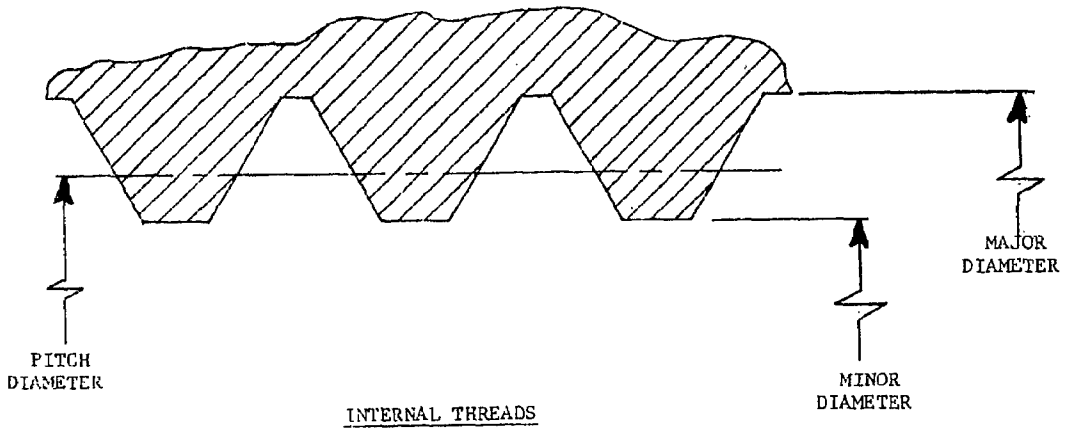

INTERNAL THREADS

CLASS 2B THREAD
0.1 PITCH
MODIFIED 60° STUB INTERNAL
DOUBLE THREAD SERIES PER MIL-STD-1373
SYMBOL DS-2B

DESIGNATION			INTERNAL THREAD-LIMITS OF SIZE							
			MINOR DIAMETER			PITCH DIAMETER			MAJOR DIAMETER	
			LIMITS		TOLER-	LIMITS		TOLER-	LIMITS	
THREAD SIZE	PITCH	LEAD	MIN.	MAX.	ANCE	MIN.	MAX.	ANCE	MIN.	MAX.
.7500	.1	.2	.7042	.7142	.0100	.7240	.7340	.0100	.7540	.7700
.8750	.1	.2	.8292	.8392	.0100	.8490	.8590	.0100	.8790	.8950
1.0625	.1	.2	1.0025	1.0145	.0120	1.0285	1.0405	.0120	1.0665	1.0865
1.1250	.1	.2	1.0650	1.0770	.0120	1.0910	1.1030	.0120	1.1290	1.1490
1.3125	.1	.2	1.2525	1.2645	.0120	1.2785	1.2905	.0120	1.3165	1.3365
1.5000	.1	.2	1.4400	1.4520	.0120	1.4660	1.4780	.0120	1.5040	1.5240
1.6250	.1	.2	1.5650	1.5770	.0120	1.5910	1.6030	.0120	1.6290	1.6490
1.8125	.1	.2	1.7525	1.7645	.0120	1.7785	1.7905	.0120	1.8165	1.8365
2.0000	.1	.2	1.9400	1.9520	.0120	1.9660	1.9780	.0120	2.0040	2.0240

NOTE: Formulas for these values are given in Table VII of MIL-STD-1373
For all other dimensions not shown above refer to MIL-STD-1373.

FIGURE 8. Connector Mating Threads Internals

Source: https://assist.dla.mil -- Downloaded: 2016-11-16T10:03Z
Check the source to verify that this is the current version before use.

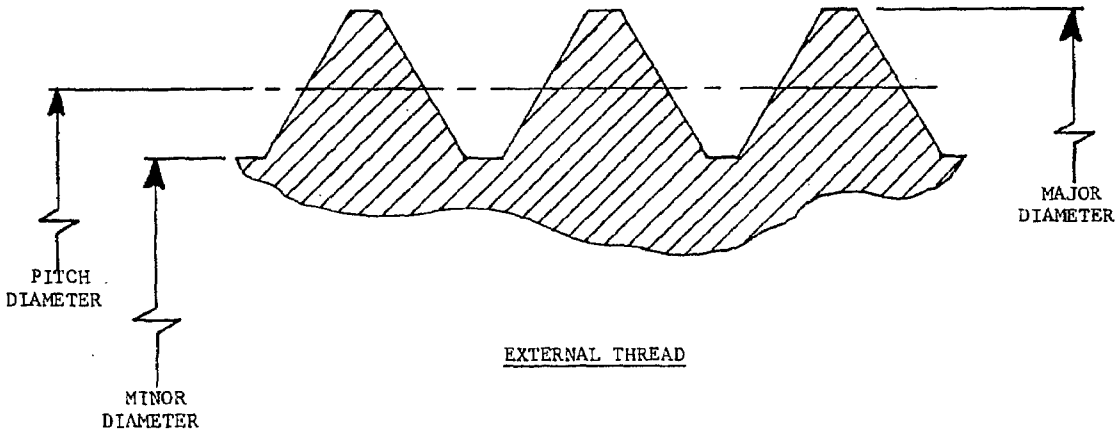

EXTERNAL THREAD

CLASS 2A THREAD
0.1 PITCH
MODIFIED 60° STUB EXTERNAL
DOUBLE THREAD SERIES PER MIL-STD-1373
SYMBOL DS-2A

DESIGNATION			ALLOW-ANCE	EXTERNAL THREAD-LIMITS OF SIZE							
				MAJOR DIAMETER			PITCH DIAMETER			MINOR DIAMETER	
THREAD SIZE	PITCH	LEAD		LIMITS		TOLER-ANCE	LIMITS		TOLER-ANCE	LIMITS	
				MAX.	MIN.		MAX.	MIN.		MAX.	MIN.
.7500	1.1	.2	.0015	.7485	.7405	.0080	.7225	.7145	.0080	.6925	.6785
.8750	.1	.2	.0015	.8735	.8655	.0080	.8475	.8395	.0080	.8175	.8035
1.0625	.1	.2	.0020	1.0605	1.0485	.0120	1.0265	1.0165	.0100	.9885	.9705
1.1250	.1	.2	.0020	1.1230	1.1110	.0120	1.0890	1.0790	.0100	1.0510	1.0330
1.3125	.1	.2	.0020	1.3105	1.2985	.0120	1.2765	1.2665	.0100	1.2385	1.2205
1.5000	.1	.2	.0020	1.4980	1.4860	.0120	1.4640	1.4540	.0100	1.4260	1.4080
1.6250	.1	.2	.0020	1.6230	1.6110	.0120	1.5890	1.5790	.0100	1.5510	1.5330
1.8125	.1	.2	.0020	1.8105	1.7985	.0120	1.7765	1.7665	.0100	1.7385	1.7205
2.0000	.1	.2	.0020	1.9980	1.9860	.0120	1.9640	1.9540	.0100	1.9260	1.9080

NOTE: Formulas for these values are given in Table VII of MIL-STD-1373
For all other diminsions not shown above refer to MIL-STD-1373.

FIGURE 9 Connector Mating Threads External Usage .

Source: https://assist.dla.mil -- Downloaded: 2016-11-16T10:03Z
Check the source to verify that this is the current version before use.

3.4.2.1.1 Inserts. *Inserts shall be non-removable.*

3.4.2.2 Inserts and wire sealing grommets. The insert assembly shall be one integral part and permit the removal and reinsertion of individual contacts without damage to the sealing members or contact retention device.

3.4.2.3 Contact arrangement. Contacts shall be spaced in accordance with MIL-STD-1698.

3.4.2.4 Contact spacing. Contacts shall be arranged in accordance with MIL-STD-1698.

3.4.2.5 Contact alignment. Inserts for socket contacts shall provide an overall sideplay of the socket contacts of 0.0025 to 0.0075 inch from the required position to facilitate alignment of mating pin contacts.

3.4.2.6 Pin contact stability. When tested as specified in 4.6.22 the total displacement of a reference point on the contact tip end shall not exceed .030 inch maximum with a one-half pound force applied.

3.4.2.7 Contact retention member. The contact retention member shall be a machined metallic clip.

3.4.3 Coupling screw threads. Coupling screw threads shall be .1P-.2L-DS Screw Thread, Modified, 60 Stub, Double Class 2A or 2B (See Figures 8 and 9). Screw threads shall be checked after plating by means of ring or plug gages only, in accordance with Handbook H-28. Slight out-of-roundness beyond the tolerance of Figures 8 and 9 is acceptable if the threads can be checked without forcing the thread gages. Screw threads may be relieved provided the relief does not interfere with proper performance of the screw threads.

3.4.4 Shell design. Connector shells shall be seamless and retain their inserts in a positive manner.

3.4.4.1 Lubrication. All internal coupling ring threads shall be coated with a lubricant during manufacture.

3.4.4.2 Spring fingers. Spring fingers shall be installed to make peripheral electrical contact with the mating shell without interfering with proper engagement. The springs shall be retained about the plug periphery. Minimum engagement of the spring fingers shall be 0.040 inch prior to contact engagement.

3.4.4.3 Finish. All surfaces shall have a 125 microinch finish, unless otherwise specified herein.

3.4.5 *Coupling connections. Threaded coupling rings shall be knurled, and* designed so that the pin and socket contacts shall engage or disengage as the ring is respectively tightened or loosened. The coupling rings of connector plugs shall be captive to the shell.

3.4.5.1 Safety of coupling rings. Coupling rings shall be designed for safety wiring. At least two holes shall be provided for shell sizes 15 and smaller, and at least three equally spaced holes for connector sizes 17 and larger. These holes shall be of a diameter sufficient to accommodate 0.032 inch diameter wire.

3.4.5.2 Shell polarization. Polarization of connectors shall be accomplished by matched integral key and keyway of counterpart connectors. The polarization of counterpart connectors shall take place before coupling rings are engaged.

3.4.5.2.1 Backshell polarization. The backshell splines key and keyway shall be polarized and mated prior to coupling.

Source: https://assist.dla.mil -- Downloaded: 2016-11-16T10:03Z
Check the source to verify that this is the current version before use.

3.4.5.3 Engagement seal. Connectors shall contain sealing means so that engaged connestors comply with the requirements specified herein. The design of the seal shall be such that in mated connectors all air paths between adjacent contacts and between contacts and shells are eliminated. There shall be interfacial mating of the engaged connector insert to provide dielectric under compression of 0.005 inch minimum. Connector plug shells shall be provided with a static peropheral seal to ensure shell-to-shell sealing.

3.4.6 Wire sealing. Connectors, except box mounting receptacles, shall be provided with a wire sealing grommet capable of sealing on wire sizes specified in Table III when used with suitable rear accessory (backshell).

3.4.6.1 Grommet sealing plug. The grommets of connectors shall be designed to accept sealing plugs in accordance with MS27186 in lieu of wire where unused contacts are employed. Sealing plugs for 15 percent of the number of contacts but not less than 1, shall be enclosed in the unit package. For indirect shipments, connectors may be ordered without grommet sealing plugs (See 6.2).

3.4.7 Wire separator. Box mounting receptacles shall have a wire separator in lieu of a wire sealing grommet, which shall extend to at least the rear end of the connector shell. The wire separator is not required to be capable of sealing on wires and shall be fabricated of 100 percent fluorosilicone.

3.5 Intermateability and interchangeability.

3.5.1 Intermateability. Plug and receptacle connectors having the same shell size, keying, and contact arrangement shall be intermateable.

3.5.2 Interchangeability. All connectors and accessories having the same military part number shall be completely interchangeable with each other with respect to installation (physical) and performance (function) as specified herein.

3.6 Magnetic permeability. The relative magnetic permeability of aluminum and stainless steel connectors and accessories shall be less than 2.0 and 5.0, respectively, when tested in accordance with 4.6.2.

3.7 Thermal Shock. There shall be no evidence of damage detrimental to the operation of the connector after being subjected to the temperature extremes in accordance with 4.6.3.

3.8 Contact retention. The axial displacement of contacts shall not exceed 0.012 inch and contacts shall be retained in their inserts when subjected to an axial load of 20 pounds when tested in accordance with 4.6.4.

3.9 Dielectric withstanding voltage. Connectors shall show no evidence of breakdown or flashover when subjected to the test voltage in accordance with 4.6.5.1. Corona shall not be considered as a breakdown.

3.10 Vibration. Mated connectors shall not be damaged and there shall be no loosening of parts due to vibration. Counterpart connectors shall be retained in full engagement, and there shall be no interruption of electrical continuity of one microsecond or longer when tested in accordance with 4.6.6.1.

3.11 Shock. Mated connectors shall not be damaged and there shall be no loosening of parts, nor shall there be an interruption of electrical continuity one microsecond or longer during the exposure to mechanical shock when tested in accordance with 4.6.7.

3.12 Contact resistance. Contacts in the mated condition shall meet the ambient (25°C) contact resistance requirements of MIL-C-39029.

Source: https://assist.dla.mil -- Downloaded: 2016-11-16T10:03Z
Check the source to verify that this is the current version before use.

3.13 Durability. Counterpart connectors shall show no mechanical or electrical defects detrimental to the operation of the connector after 100 cycles of coupling and uncoupling in accordance with 4.6.9.1. The connectors shall be subjected to 50 cycles before and after the corrosion test. No lubricant shall be applied prior, during or after the test except as specified in 3.4.4.1.

3.14 Corrosion. Connectors shall show no exposure of basis metal due to corrosion when tested in accordance with 4.6.10.

3.15 Insulation resistance.

3.15.1 At room temperature. The insulation resistance at 25°C (77°F) shall be greater than 5,000 megohms when tested in accordance with 4.6.11.2.

3.15.2 At elevated temperature - (long time). The insulation resistance shall be 1000 megohms at 200°C as shown in Figure 1 when tested in accordance with 4.6.11.3.

3.16 Fluid immersion. Connectors shall mate properly with their counterpart connectors after fluid immersion in accordance with 4.6.12.

3.17 Insert retention. Inserts shall not be dislocated from their original positions or damaged when they are subjected to the specified pressures in accordance with 4.6.13.

3.18 Moisture resistance. Mated connectors with any rear accessory hardware assembled shall maintain an insulation resistance of 100 megohms or greater at 25°C after being subjected to the moisture resistance test in accordance with 4.6.14.

3.19 Water pressure.

3.19.1 Sealing connectors. Mated connectors assembled with backshells shall exhibit an insulation resistance of 100 megohms or greater after being subjected to the water pressure test. They shall show no evidence of entrance of water when subjected to the test in accordance with 4.6.15.

3.19.2 Backshells. Cable adapters shall show no evidence of entrance of water when subjected to the water pressure test of 4.6.15.

3.20 Cable pull-out. Cables shall not pull out when the loads are applied in accordance with 4.6.16 nor shall the slippage exceed .125 inch.

3.21 External bending moment. Connectors shall exhibit no evidence of damage, as revealed by inspection with 3X magnification, when stressed using the applicable bending moment in accordance with 4.6.17.

3.22 Shell conductivity. Mated connectors shall be electrically conductive from the plug accessory thread to the receptacle mounting flange or to the accessory thread on the cable connecting receptacle. The overall dc resistance shall not exceed 0.005 ohms when measured in accordance with 4.6.18.1. When tested with accessory on the dc resistance should not exceed 0.010 ohms when measured in accordance with 4.6.18.2.

3.23 Contact installing and removal forces. The forces required to install and remove unlocked contacts shall not exceed 10 pounds maximum when tested in accordance with 4.6.19.

3.24 Electromagnetic interference (EMI) shielding. When tested as specified in 4.6.21, the EMI shielding capabilities of mated shells shall not be less than that specified in Table IV at the specified frequencies.

Source: https://assist.dla.mil -- Downloaded: 2016-11-16T10:03Z
Check the source to verify that this is the current version before use.

TABLE IV
EMI Shielding Effectiveness

Frequency (Megahertz)	Attenuation (Decibels)
100	60 min.
200	50 min.
400	45 min.
600	45 min.
800	35 min.
1000	40 min.

3.25 Drop. When connectors are tested as specified in 4.6.20 there shall be no breaking or cracking of inserts, bending of pins nor any other damage which prevents the connectors from being mated or renders them unfit to continue further testing. Any chipping of the inserts which affects its polarization or retention in the shell shall be considered a failure.

3.26 Marking. Each connector shall be legibly and permanently marked on the shell or coupling ring in accordance with MIL-STD-1285. The military part number shall be as shown in 1.2.1 (See 3.1). The connector shall be marked with the connector part number. The connector assembly part number shall only be marked on the plastic bag containing the assembly.

3.26.1 Insert marking. Inserts shall be marked as specified in MIL-STD-1698. Manufacturer's identification is permitted. Raised or depressed characters shall not be used on insert mating faces for any markings.

3.26.1.1 Contact designations. Contact identification on connector inserts shall be designated by identifiable letters or numbers of contrasting color. Positioning and arrangement of the characters shall be designated on the front face of the insert.

3.26.1.2 Connectors. Eighty percent of the characters on any face of the connectors shall remain identifiable after completion of the tests specified in Table V.

3.26.1.3 Grommet and insulating spacers. Where space permits, wire openings on the rear face of grommets and insulating spacers shall be marked with legible characters corresponding to the insert contact designators. Contrasting colored characters shall be used.

3.26.1.4 Use of Military Part Numbers. Military Part Numbers shall not be applied to a product, except for qualification test samples (See 6.3), until notification has been received from the activity responsible for qualification that the product has been approved for listing on the qualified products list (QPL).

3.27 Workmanship. Poor molding fabrication, loose materials, defective bonding, damaged or improperly assembled contacts, peeling, or chipping of plating or finish, galling or mating parts, nicks and burrs of metal parts and post molding warpage will be considered adequate basis for rejection of items.

4.0 QUALITY ASSURANCE PROVISIONS

4.1 Responsibility for inspection. Unless otherwise specified in the contract, the contractor is responsible for the performance of all inspection requirements as specified herein. Except as otherwise specified in the contract, the contractor may use his own or any other facilities suitable for the performance of the inspection requirements specified herein, unless disapproval by the Government. The Government reserves the right to perform any of the inspections set forth in the specification where such inspections are deemed necessary to assure supplies and services conform to prescribed requirements.

Source: https://assist.dla.mil -- Downloaded: 2016-11-16T10:03Z
Check the source to verify that this is the current version before use.

4.1.1 Test equipment and inspection facilities. Test and measuring equipment and inspection facilities of sufficient accuracy, quality and quantity to permit performance of the required inspection shall be established and maintained by the contractor. The establishment and maintenance of a calibration system to control the accuracy of the measuring and test equipment shall be in accordance with MIL-STD-45662.

4.1.2 Assembly plants. Assembly plants must be listed on or approved for listing on the applicable qualified products list. The qualified connector manufacturer shall certify that the assembly plant is approved for the distribution of the manufacturer's parts. The assembly plant shall use only piece parts supplied by the qualified connector manufacturer. No testing other than visual examination is required of certified piece parts obtained from the qualified connector manufacturer, except when there is cause for rejection. Assemblies produced at the assembly plant shall be subjected to inspection to assure that the assembly process conforms with that established at the qualified manufacturing plant. Quality control requirements, including Government inspection surveillance, shall be the same as required for the qualified connector manufacturer.

4.2 Classification of inspection. The inspection of connectors shall be classified as follows:

a. Qualification inspection (4.3).
b. Quality conformance inspection (4.4).

4.2.1 Inspection conditions. Unless otherwise specified herein, all inspections shall be performed under any combination of conditions within the following ranges. Any specified condition shall not affect the other two ambient ranges.

Temperature:	15^0 to 35^0C
Relative humidity:	30 to 80 percent
Barometric pressure:	650 to 800 mm of mercury

4.3 Qualification inspection. Qualification inspection shall consist of the examinations and tests performed in the sequence specified in Table V on the qualification test samples specified in 4.3.2. After receipt of the letter of authorization from the agent responsible for qualification, the applicant shall submit three copies of his test reports (certified by the Government inspector indicating the extent to which the tests were witnessed), to the agent responsible for qualification.

4.3.1 Qualification of additional connectors. Qualification by similarity to qualified connectors or connectors submitted for qualification is permissible when materials, designs and manufacturing processes are identical. When materials, designs or manufacturing processes differ, sufficient testing to prove the adequacy of the affected characteristics will be required to obtain qualification by similarity. Full details of the similarity and differences, along with proposed tests, shall be submitted to the qualifying activity for approval prior to the commencing of testing. Provided receptacle wall mounting is qualified, the receptacle cable connecting, receptacle box mounting, receptacle jam nut mounting and dummy receptacle wall mounting of the same shell size may be qualified by similarity. Provided one backshell is qualified all backshells of the same size may be qualified by similarity.

4.3.2 Qualification samples. Samples of each shell size for which qualification is desired shall be tested in the sequence specified in Table V, as applicable. Specific details on preparation of samples shall be as follows: Each connector subjected to qualification testing shall be provided with a counterpart connector for those tests requiring mating assemblies. The counterpart connectors provided for this purpose shall be new, previously qualified connectors or new connectors submitted for qualification testing. Manufacturers mot producing mating connectors shall submit data substantiating that tests were performed with approved counterpart connectors.

Source: https://assist.dla.mil -- Downloaded: 2016-11-16T10:03Z
Check the source to verify that this is the current version before use.

4.3.2.1 Wire-to-contact assembly. Unless otherwise specified herein, connectors shall be wired with approximately 3 feet of wire as spplicable, selected from those referenced in Table III. Where wired contacts are required, terminations shall be accomplished as follows.

4.3.2.1.2 Contacts. Contacts shall be crimped with tools conforming to MIL-C-22520 as specified on the applicable contact specification sheet.

TABLE V
Qualification Inspection for Connectors

Inspection	Requirement Paragraph	Test Paragraph
Group 1		
Visual and mechanical	3.1, 3.3, 3.4, 3.5, 3.26, 3.27	4.6.1
Magnetic permeability	3.6	4.6.2
Shell conductivity	3.22	4.6.18.1
Contact installing and removal	3.23	4.6.19
Contact stability	3.4.2.6	4.6.22
Insulation resistance	3.15.1	4.6.11.2
Dielectric withstanding voltage	3.9	4.6.5.1
Thermal Shock	3.7	4.6.3
Moisture resistance	3.18	4.6.14
Durability	3.13	4.6.9.1
Corrosion	3.14	4.6.10.1
Shell conductivity	3.22	4.6.18.1
Contact resistance	3.12	4.6.8
Contact retention	3.8	4.6.4
Insert retention	3.17	4.6.13
External bending moment	3.21	4.6.17
Visual and mechanical	3.1, 3.3, 3.4, 3.5, 3.26, 3.27	4.6.1
Group 2		
Visual and mechanical	3.1, 3.3, 3.4, 3.5, 3.26, 3.27	4.6.1
Insulation resistance	3.15.1	4.6.11.2
Dielectric withstanding voltage	3.9	4.6.5.1
Insulation resistance (long time)	3.15.2	4.6.11.3
Contact resistance	3.12	4.6.8
Dielectric withstanding voltage	3.9	4.6.5.1
Contact retention	3.8	4.6.4
Insert retention	3.17	4.6.13
Visual and mechanical	3.1, 3.3, 3.4, 3.5, 3.26, 3.27	4.6.1

Source: https://assist.dla.mil -- Downloaded: 2016-11-16T10:03Z
Check the source to verify that this is the current version before use.

TABLE V. Qualification inspection for connectors (continued)

Inspection	Requirement Paragraph	Test Paragraph
Group 3		
Visual and mechanical	3.1, 3.3, 3.4, 3.5, 3.26, 3.27	4.6.1
Dielectric withstanding voltage	3.9	4.6.5.2
Fluid immersion	3.16	4.6.12
Insulation resistance	3.15.1	4.6.11.2
Dielectric withstanding voltage	3.9	4.6.5.2
Contact retention	3.8	4.6.4
Insert retention	3.17	4.6.13
Visual and mechanical	3.1, 3.3, 3.4, 3.5, 3.26, 3.27	4.6.1
Group 4		
Visual and mechanical	3.1, 3.3, 3.4, 3.5, 3.26, 3.27	4.6.1
Dielectric withstanding voltage	3.9	4.6.5.2
Water pressure	3.19.1	4.6.15
Vibration	3.10	4.6.6.1
High impact shock	3.11	4.6.7
Dielectric withstanding voltage	3.9	4.6.5.1
Moisture resistance	3.18	4.6.14
Corrosion	3.14	4.6.10.2
Shell conductivity	3.22	4.6.18.2
Drop test	3.25	4.6.20
Cable pull out	3.20	4.6.16
External bending moment	3.21	4.6.17
Visual and mechanical	3.1, 3.3, 3.4, 3.5, 3.26, 3.27	4.6.1
Group 5 (Accessories only)		
Visual and mechanical	3.1, 3.3, 3.4, 3.5, 3.26, 3.27	4.6.1
Magnetic permeability	3.6	4.6.2
Vibration	3.10	4.6.6.1
Shock	3.11	4.6.7
Moisture resistance	3.18	4.6.14
Water pressure	3.19.2	4.6.15
Corrosion	3.14	4.6.10.2
Shell conductivity	3.22	4.6.18.1
Cable pull out	3.20	4.6.16
External bending moment	3.21	4.6.17
Visual and mechanical	3.1, 3.3, 3.4, 3.5, 3.26, 3.27	4.6.1
Group 6		
EMI	3.24	4.6.21

Source: https://assist.dla.mil -- Downloaded: 2016-11-16T10:03Z
Check the source to verify that this is the current version before use.

4.3.2.2 Connectors. Qualification samples and qualification tests shall be as specified in the following paragraphs. Successful completion of qualification tests in Table V for:

a.	DJ	qualifies	D
b.	DJS	"	DS
c.	D	"	DS (See Note 1)
d.	DJ	"	DJS (See Note 1)

NOTE 1: To qualify DS or DJS a mated pair of DS (MIL-C-28840/10, /12, or /14 and /16) or of DJS (MIL-C-28840/20 and /26) as applicable shall be submitted to the qualifying activity for examination and qualification approval.

4.3.2.2.1 Group 1. Two connectors of each class in each shell size with insert arrangements representing typical manufacturing, shall be subjected to the group 1 tests of Table V. One sample shall have the pin inserts in the plug and the socket inserts in the wall mounting receptacle. The other sample shall have the inserts reversed. One sample shall be terminated with wire approaching the minimum OD specified in Table III, and the other with maximum OD wire. The connectors shall be tested with a strain relief clamp M28840/1 assembled on the back threads or other appropriate backshell hardware for which qualification is desired. The receptacles shall be wall mounting.

4.3.2.2.2 Group 2. One connector with insert arrangement having the maximum contact density shall be subjected to the group 2 tests of Table V. The plug shall have socket inserts, and the wall mounting receptacle pin inserts, and shall be terminated with maximum OD hook up wire specified in Table III. Backshell hardware shall be the same as group 1, and the receptacles shall be wall mounting.

4.3.2.2.3 Group 3. Twelve mated pairs of connectors of either classD, DS, DJ, or DJS of the largest shell size with insert representing typical manufacturing shall be subjected to group 3 test of Table V. All samples shall have the socket insert in the plug and the pin insert in the wall mounting receptacle and shall be terminated with maximum OD wire specified in Table III. Backshell hardware shall be the same as group 1. One sample shall be subjected to each fluid test.

4.3.2.2.4 Group 4. Two complete connector assemblies, wall mounting receptacles and straight plugs, each with insert arrangements with the greatest number of contacts for which qualification is desired in each shell size shall be subjected to the tests of Table V, group 4. One sample shall have the pin insert in the plug and the socket insert in the receptacle. The other sample shall have the socket insert in the plug and the pin insert in the receptacle. One connector shall be assembled with a M28840/6 cable backshell and 10 feet of the applicable cable specified in Table VI. The remaining connector shall be assembled with 7 feet of the applicable conduit and 10 feet of the applicable cable specified in Table VI.

4.3.2.2.5 Group 5 (Accessories only). One accessory (backshell) of each shell size for which qualification is desired shall be tested. Each sample shall be assembled to an appropriate connector plug. The backshell shall be assembled to 10 feet of the applicable cable specified in Table VI or to 7 feet of the applicable conduit and 10 feet of the applicable cable specified in Table VI as applicable. The sample shall be mated with its counterpart wall mounting receptacles.

4.3.2.2.6 Group 6. Two straight plug and counterpart wall mounting receptacles, less inserts and contacts of each shell size with applicable conduit and conduit backshell in accordance with Table VI for which qualification is desired shall be tested.

4.3.3 Qualification rejection. There shall be no failures during any examination or tests of the connectors or accessories submitted for qualification tests. After notification of any failure, the agent responsible for qualification testing (see 6.3) shall receive details of corrective action from the manufacturer before initiating any further tests deemed necessary to assure compliance with connector requirements.

Source: https://assist.dla.mil -- Downloaded: 2016-11-16T10:03Z
Check the source to verify that this is the current version before use.

4.4 Quality conformance inspection.

4.4.1 Inspection of product for delivery. Inspection of product for delivery shall consist of Groups A and B inspection.

TABLE VI
Test Cables and Accessory Size

Designator 1/	Cable MIL-C-915 Type	M28840/6 Backshell	M28840/5 Adapter	M28840/4 Conduit	Tensile Load (pounds)
A (11)	TPNW-3	/6-01WB	/5-01WB	/4-03BE	50
B (13)	TPNW-5	/6-03WB	/5-02WB	/4-03BE	50
C (15)	2U-10	/6-06WB	/5-05WB	/4-04BE	50
D (17)	2U-15	/6-08WB	/5-08WB	/4-05BE	50
E (19)	2U-19	/6-11WB	/5-11WB	/4-05BE	75
F (23)	2U-30	/6-13WB	/5-14WB	/4-06BE	75
G (25)	2U-45	/6-16WB	/5-18WB	/4-08BE	75
H (29)	2U-60	/6-20WB	/5-21WB	/4-10BE	100
J (33)	2SU-44	/6-23WB	/5-24WB	/4-16BE	100

Notes:
1. Shell sizes are provided within parenthesis for information and are not a part of the designator.

4.4.2 Inspection lot. An inspection lot shall consist of all connectors covered by the same specification sheets, produced under essentially yhe same conditions, and offered for inspection at one time. In-process controls, unrelated to lot sizes of finished connectors, may be used, provided an equivalent or tighter AQL level is maintained.

4.4.2.1 Group A inspection. Group A inspection shall consist of the examination of product in accordance with 4.6.1.

Source: https://assist.dla.mil -- Downloaded: 2016-11-16T10:03Z
Check the source to verify that this is the current version before use.

4.4.2.1.1 Sampling plan. Statistical sampling and inspection shall be in accordance with MIL-STD-105 for general inspection level II. The acceptable quality level (AQL) shall be 1.0 for major defects and 4.0 for minor defects. Major and minor defects shall be as defined in MIL-STD-105.

4.4.2.1.2 Rejected lots. If an inspection lot is rejected, the supplier may rework it to correct the defects, or screen out the defective units, and resubmit.

4.4.2.2 Group B inspection. Group B inspection shall consist of the applicable tests specified in Table VII and shall be made on sample units which have been subjected to and have passed Group A inspection.

TABLE VII
Group B Inspection

Inspection	Requirement Paragraph	Test Paragraph
Dielectric withstanding voltage	3.9	4.6.5.2
Insulation resistance	3.15.1	4.6.11.2

4.4.2.2.1 Sampling plan. The sampling plan shall be in accordance with MIL-STD-105 for normal inspection level S-4. The sample size shall be based on the inspection lot size from which the sample was selected for Group A inspection. The AQL shall be 2.5 percent defective.

4.4.2.2.2 Rejected lots. If an inspection lot is rejected, the supplier may rework it to correct the defects, or screen out the defective units, and resubmit for reinspection. Resubmitted lots shall be inspected using tightened inspection. Such lots shall be separate from new lots, and shall be clearly identified as reinspected lots.

4.4.2.2.3 Disposition of sample units. Sample units which have passed the Group B inspection may be delivered on the contract or purchase order.

4.5 Periodic inspection. Periodic inspection shall consist of Group C. Except where the results of these inspections show non-compliance with the applicable requirements (See 4.5.1.5), delivery of products which have passed Group B shall not be delayed pending the results of these periodic inspections.

4.5.1 Group C inspection. Group C inspection shall consist of the tests specified in Table VIII in the order shown. Group C inspection shall be made on sample units selected from inspection lots which have passed the Groups A and B inspection. Group C inspection reports shall be forwarded to the qualifying activity every 18 months as specified in the sampling plan.

4.5.1.1 Sampling plan. Every 18 months, mated connector sample units which have passed Groups A and B inspection shall be subjected to the tests specified in Table VIII. Samples shall be selected in sufficient quantity to provide two samples per applicable test group, of each class for which retention of qualification is desired.

Source: https://assist.dla.mil -- Downloaded: 2016-11-16T10:03Z
Check the source to verify that this is the current version before use.

TABLE VIII
Group C Inspection

Inspection	Requirement Paragraph	Test Paragraph	Group 1	Group 2
Contact installing and removal	3.23	4.6.19	X	
Contact retention	3.8	4.6.4	X	
Pin contact stability	3.4.2.6	4.6.22	X	
High impact shock	3.11	4.6.7		X
Moisture resistance	3.18	4.6.14		X
Durability	3.13	4.6.9.1	X	
Corrosion	3.14	4.6.10.1	X	
Shell conductivity	3.22	4.6.18.1	X	
Contact resistance	3.12	4.6.8	X	
Visual and mechanical	3.1, 3.3, 3.4, 3.5, 3.26, 3.27	4.6.1	X	X

4.5.1.2 Connectors. Sample connectors shall consist of four mating plugs and receptacles in each shell size. The samples shall be wired as specified in the applicable subparagraph of 4.3.2. Two complete mating connector assemblies shall be subjected to the tests of Tavke VIII, Group 1, and the other two assemblies shall be subjected to the tests of Table VIII, Group 2.

4.5.1.3 Failures. If one or more smaple units fail to pass Group C inspection, the sample shall be considered to have failed.

4.5.1.4 Disposition of sample units. Sample units which have been subjected to Group C inspection shall not be delivered on the contract or purchase order.

4.5.1.5 Noncompliance. If a sample fails to pass Group C inspection, the manufacturer shall take corrective action on the materials or processes, or both, as warranted, and on all units of product which can be corrected and which were manufactured with essentially the same materials and processes, and which are considered subject to the same failure. Acceptance of the product shall be dincontinued until corrective action, acceptable to the Government, has been taken. After the corrective action has been taken, Group C inspection shall be repeated on additional sample units (all inspection, or the inspection which the original sample failed, at the option of the Government). Groups A and B inspections may be reinstituted; however, final acceptance shall be withheld until the Group C reinspection has shown that the corrective action was successful. In the event of failure after reinspection, information concerning the failure and corrective action taken shall be furnished to the cognizant inspection activity and the qualifying activity.

4.5.2 Packaging inspection. The sampling and inspection of the preservation packaging; packing and container marking shall be in accordance with the requirements of MIL-C-55330.

4.6 Methods of examination and tests.

4.6.1 Visual and mechanical examination. The connectors, accessories, and piece parts shall be visually and mechanically examined to ensure conformance with this specification and the applicable military specification sheets and standard (See 3.1, 3.3, 3.4, 3.5, 3.26, and 3.27). In-process controls of component parts, unrelated to lot sizes of finished connectors, may be utilized in lieu of examination of these components in the finished connectors to assure conformance of these component parts.

Source: https://assist.dla.mil -- Downloaded: 2016-11-16T10:03Z
Check the source to verify that this is the current version before use.

4.6.1.1 Lubrication. No lubricant shall be applied to the connectors, prior to, during or after any of the tests, except that which was applied in accordance with 3.4.4.1.

4.6.2 Magnetic permeability. The relative permeability shall be checked with an indicator conforming to MIL-I-17214. The connectors or accessories may be wired or unwired, but shall not be carrying current (See 3.6).

4.6.3 Thermal shock. Accessories or unmated connectors shall be tested in accordance with method 107, condition A of MIL-STD-202 except that the temperature extremes shall be as specified in Table IX. At the completion of the last cycle, the connectors shall be returned to room temperature for inspection (See 3.7).

Table IX
Temperature Extremes

Extremes EXTREMES	Degrees C	Degrees F
Low	-55 +0 -3	-67 +0 -5
High	+200 +3 -0	+392 +5 -0

4.6.4 Contact retention. A minimum load of 20 pounds shall be applied to individual contacts. The connector shall have all contacts in place during the test. The load shall be applied at a rate of approximately 1 pound per second until the specified load has been reached. One hundred percent of the contacts in each connector shall be tested (3.8), except when testing under Table V, Group 3, where only 10 percent shall be tested. Connectors shall be tested with the accessory removed prior to the test and loads whall be applied from the mating end of the contacts. The load shall be applied after the slack in the contact has been taken up and the displacement of the contacts shall be measured under load after the load has been applied for a minimum period of 5 seconds. Remove and reinsert the contacts using the tools specified in 3.4.1.2. The contacts shall be retained in the connector.

4.6.5 Dielectric withstanding voltage.

4.6.5.1 Dielectric withstanding voltage (sea level). Mated or unmated connectors as applicable, shall be tested in accordance with method 3001 of MIL-STD-1344. A 1000 volt RMS shall be applied between each adjacent contact and between all peripheral contacts and the shell.

4.6.5.2 Dielectric withstanding voltage (Group B inspection and after fluid immersion Table V, Group 3). Unmated connectors or insert assemblies as applicable shall show no evidence of breakdown when a 1000 volt route mean square (RMS) is applied between the two closest contacts and between the shell (or simulated shells) and the contact closest to the shell in accordance with method 3001 of MIL-STD-1344. The period of application of voltage shall be 1 second minimum and simulated contacts may be used (See 3.9).

4.6.6 Vibration. Complete mated connectors shall be mounted as follows and subjected to the applicable vibration test. Each receptacle shall be mounted on a suitable fixture, which, in turn, shall be attached to a vibration table. A suitable sensor shall monitor the vibration of the receptacle at a point on or near the receptacle. A counterpart plug shall be engaged with the receptacle and held by normal locking means without the use of safety wire. The wire bundles or cables shall be clamped to non-vibrating points at least 36 inches from the rear of the connectors. The clamping length shall be chosen to avoid resonance of the wire bundles or cables.

Source: https://assist.dla.mil -- Downloaded: 2016-11-16T10:03Z
Check the source to verify that this is the current version before use.

4.6.6.1 Vibration. Mated connectors shall be mounted as specified in 4.6.6 and tested in accordance with method 2005, test condition III of MIL-STD-1344 and also in accordance with endurance test of MIL-STD-167-1(SHIPS). All contacts shall be wired in series and a current of 100 ± 10 milliamperes shall flow through the series circuit during the test. A suitable instrument shall be employed to monitor current flow and indicate discontinuity of contact or interruption of current flow of one microsecond or longer (See 3.10).

4.6.7 High Impact Shock. A complete mated connector shall be affixed with the M28840/6 backshell and six feet of cable, as specified in Table VI. Another complete mated connector shall be affixed with the conduit backshell, conduit, and six feet of cable also as specified in Table VI. Both connector assemblies shall then be tested in accordance with MIL-S-901, Grade A. The mounting shall be in accordance with the standard mounting for electrical switchboard instruments and other panel mounted equipment, Fixture 6D-1 of MIL-S-901. All contacts shall be wired in a series circuit with 100 ± 10 milliamperes flowing through the series circuit during the high impact shock. A suitable device shall be used to monitor the current flow and to indicate any discontinuity of current flow which is one microsecond or longer. The mated connectors shall be held together only by the normal locking device. Cable or wires shall be supported on a stationary frame not closer than 36 inches from the connector assembly (See 3.11).

4.6.8 Contact resistance. The contact resistance shall be measured in accordance with the contact resistance test of MIL-C-39029 (See 3.12).

4.6.9 Durability.

4.6.9.1 Durability with coupling rings. The wired, assembled plugs and receptacles shall be mated and unmated 100 times at a maximum rate of 30 cycles per hour with coupling rings attached. The connectors shall be mated and unmated 50 cycles before corrosion and 50 cycles after corrosion (See 3.13).

4.6.10 Corrosion.

4.6.10.1 Corrosion. Connectors shall be tested in accordance with method 1001 of MIL-STD-1344, test condition C. The following details and exceptions shall apply:

a. The connectors shall be tested for 452 hours mated followed by 48 hours unmated.

b. The connectors shall not be mounted, but shall be suspended from the top of the chamber using waxed twine or string, glass rods or glass cord.

c. Wire ends shall be protected to prevent salt migration. After salt spray exposure the remaining number of durability cycles specified in 4.6.9.1 shall be completed.

4.6.10.2 Corrosion. Same as above except on Groups 4 and 5 samples the durability test does not need to be performed.

4.6.11 Insulation resistance.

4.6.11.1 Insulation resistance at room temperature. Unmated connectors shall be tested in accordance with method 3003 of MIL-STD-1344. The following details and exceptions shall apply:

a. For lot acceptance testing, where it is undesirable to install actual contacts in connectors, simulated contacts and special techniques may be used in performing this test.

b. The tolerance on the applied voltage shall be ± 10 percent.

Source: https://assist.dla.mil -- Downloaded: 2016-11-16T10:03Z
Check the source to verify that this is the current version before use.

4.6.11.2 Insulation resistance at room temperature. Insulation resistance shall be measured in accordance with 4.6.11.1 between at least two closest adjacent contacts, and between the shell and at least one contact closest to shell. Simulated contacts may be used (See 3.15.1).

4.6.11.3 Insulation resistance at elevated temperature (long time). The insulation resistance shall be measured in accordance with 4.6.11.1. Elevated temperatures shall be 200°C. All measurements shall be made at the end of 1,000 hours while the connectors are at the elevated temperature.

4.6.12 Fluid immersion.

4.6.12.1 Complete capabilities. The connector shall be immersed in fluids listed in Table X. Each sample being subjected to only one of the fluids and associated test specified in the table. After testing in accordance with the individual test procedure, the connectors shall be visually (no magnification) inspected for cracks and tears and shall be mated by hand.

4.6.13 Insert retention. Inserts, less removable grommets or any insert supporting accessories, shall be subjected to axial laods in each direction; in accordance with MIL-STD-1344 test method 2010. The loading shall be accomplished by applying an equivalent load to the pressure specified. The pressure shall be increased gradually at a rate of approximately 10 pounds per square inch (psi)/second until the pressure in Table XI is reached. The insert shall retain its normal position in the connector shell for at least 5 seconds at the maximum specified pressure (See 3.17).

4.6.14 Moisture resistance at high humidity. Wired, mated connectors shall be subjected to the humidity test specified in method 1002 of MIL-STD-1344. The following details and exceptions shall apply:

a. Test procedure - Type II.

b. The mated connectors shall be mounted in a vertical position.

c. Step 7a shall be performed during the last cycle.

d. Three hours minimum after the start of step 7a, during the final cycle and while the connectors are still subjected to high humidity, the insulation resistance shall be measured when the chamber temperature reaches 20° ± 5°C and condensation is observed on the connector.

e. For qualification testing, insulation resistance readings shall be made on a minimum of 50 percent of the circuits.

4.6.15 Water pressure. The connectors shall be immersed in tap water to a depth of 6 feet for 48 hours as follows:

a. Plugs with backshells shall be assembled to test cables.

b. Receptacles shall be mounted by their normal mounting means, with mounting flange gaskets. One-half of the wall mounting receptacles shall be front mounted and the remaining half shall be back mounted. The terminal ends of the receptacles shall be external to the tank.

Source: https://assist.dla.mil -- Downloaded: 2016-11-16T10:03Z
Check the source to verify that this is the current version before use.

TABLE X
Fluids for Fluid Immersion Test

Sample Number	Test Fluid	Test Procedure
1	MIL-L-7808	Immerse unmated connectors in fluid at 120 ± 3°C for 5 minutes. Remove connectors and allow to drain for a minimum of 1 hour at room temperature. Fluid shall be drained from all recesses. Mate connectors and expose to 125 ± 3°C in an air circulating oven for 6 hours. Repeat procedure for a total of seven cycles.
2	MIL-L-23699	
3	MIL-H-5605	Immerse unmated connectors in fluid at 85 ± 3°C for 5 minutes. Remove connectors and allow to drain for a minimum of 1 hour at room temperature. Fluid shall be drained from all recesses. Mate connectors and expose to 100 ± 3°C in an air circulating oven for 6 hours. Repeat procedure for a total of seven cycles.
4	Hydraulic Fluid 1/ ST0145LB0001	
5	MIL-A-8243	Immerse mated connectors in fluid at 65 ± 3°C for 5 minutes. Remove connectors and allow to drain for a minimum of 1 hour at room temperature. Fluid shall be drained from all recesses. Unmate and expose connectors to 100 ± 3°C in an air circulating oven for 6 hours. Repeat procedure for a total of seven cycles.
6	MIL-C-25769 (diluted for cleaning)	
7	MIL-T-5624	Same as procedure 1, except that the fluid shall be at 25 ± 3°C, and oven at 55 ± 3°C for 6 hours.
8	Coolant-dielectric fluid synthetic silicate ester base 2/	Unmated connectors shall be pre-conditioned at 175°C for 30 minutes. Immerse connectors fully in room temperature fluid for 1 minute. Remove connectors and allow to stabilize at room temperature for 1 hour minimum. Fluid shall be drained from all recesses.
9	Commercial regular gas MIL-G-3056 (type 1)	The wired, assembled, unmated connector shall be immersed in the fluid at 25 ± 3°C for 5 minutes, removed from the fluid and exposed to free air for 24 ± 2 hours. This conditioning cycle shall be repeated until the connector has been subjected to five complete cycles. For a maximum of two cycles, the exposure to free air may be extended to 75 hours.
10	One part by volume of isopropyl alcohol, per TT-I-735, grade A or B, and three parts by volume of mineral spirits per TT-T-291, grade 1 or P-D-680, type 1.	
11	1-1-1 trichloroethane	
12	Azeotrope of trichlorotrilfuoroethane and methylene chloride	

1/ M2-V Chevron oil or equivalent

2/ Coolanol 25, or equivalent

Source: https://assist.dla.mil -- Downloaded: 2016-11-16T10:03Z
Check the source to verify that this is the current version before use.

TABLE XI
Insert Retention Test Pressure

Designator 1/	Test Pressure (PSI Gage)
A (11)	100
B (13)	100
C (15)	100
D (17)	100
E (19)	100
F (23)	75
G (25)	60
H (29)	60
J (33)	45

NOTE: 1. Shell sizes are provided within parenthesis for information and are not a part of the designator.

4.6.15 Water pressure (continued).

c. The connectors tested shall be mated, and insulation resistance of the mated immersed connectors shall be measured at the end of the 48 hour period. Upon completion of the test, the connectors shall be removed from the tank, all external moisture removed from the connectors by shaking them at room temperature, and insulation resistance measured within one-half hour after removal from the water. The connectors shall be inspected for internal leakage of water at the connector interface and cable housing. Receptacles shall be inspected for leakage through or around the insert and for leakage of the panel seals (See 3.19). Dummy connectors duplicating the connectors accessory interfacing features, see Figure 7, may be used in lieu of actual connectors in testing the accessories.

4.6.16 Cable retention. The connector shall have the adapter installed and wired with the cable specified in Table VI. The tensile load specified in Table VI shall be applied in the direction tending to displace the cable towards the rear of the adapter. The load shall be applied for one hour and the amount of slippage between the cable and test plug shall be measured.

4.6.17 External bending moment. The wall mounting receptacle shall be mounted as in normal service to a rigid panel. Before mating the plug to the receptacle, a bending moment test arm shall be threaded onto the rear of the plug shell. The fixture shall be of any convenient design for application of the load except it must not provide support for the connector shell in front of the engaged threads (See Figure 10). After mating the plug and receptacle, the bending moment listed in Table XII measured from the panel shall be applied. The load shall be applied at a rate of approximately 10 pounds per second until the required load is applied. The load shall then be held for 1 minute (See 3.21).

Source: https://assist.dla.mil -- Downloaded: 2016-11-16T10:03Z
Check the source to verify that this is the current version before use.

TABLE XII. External Bending Moment

DESIGNATOR 1/	Bending Moment (inch/pounds)
A (11)	300
B (13)	300
C (15)	300
D (17)	370
E (19)	420
F (23)	520
G (25)	570
H (29)	630
J (33)	750

NOTE:

1. Shell sizes are provided within parentheses for information only and are not a part of the designator.

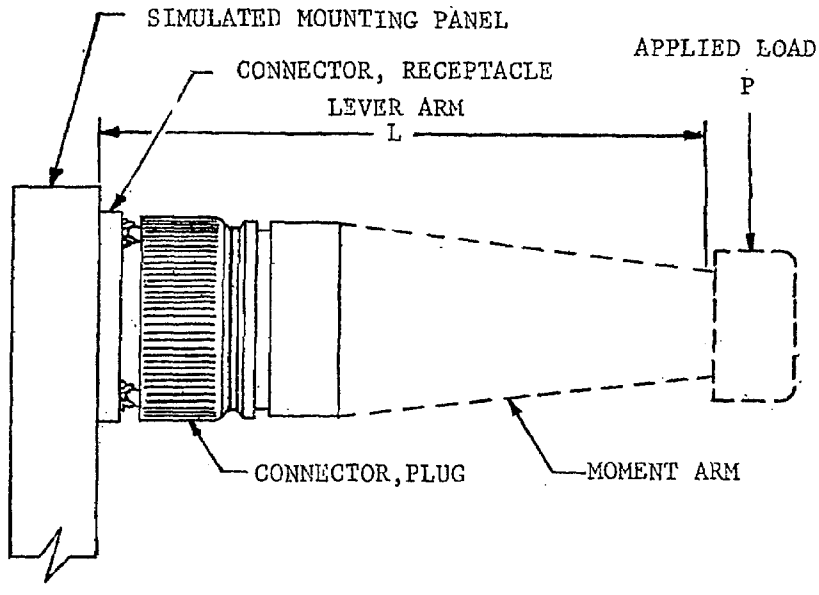

FIGURE 10. External bending moment test setup.

Source: https://assist.dla.mil -- Downloaded: 2016-11-16T10:03Z
Check the source to verify that this is the current version before use.

4.6.18 Shell conductivity.

4.6.18.1 Shell conductivity (connectors only). The direct current resistance of the wired, mated, assembled connectors shall be measured from a point on the rear accessory thread of the plug to the mounting flange of the receptacle. The point of measurement on the square flange receptacle shall be adjacent to the mounting holes and adjacent to the "O" ring on the front or mounting side of the flange for the single hole mount receptacle. The direct current resistance shall not exceed the values specified in 3.22 when measured by the volt meter-ammeter method. The applied potential shall be 1-1/2 volts direct current maximum. A resistance shall be inserted in the circuit to limit the current to .100 ± .010 aperes. Probes with spherical ends of .05 inch manimum radius shall be used to make the voltage measurements on the connectors. The probes shall not puncture or otherwise damage the connector finish (See 3.22).

4.6.18.2 Shell conductivity (accessories and connectors). Same as above except on Group 4 samples. Measurement shall be taken from end of accessory that is specified in Table VI (See Figure 11).

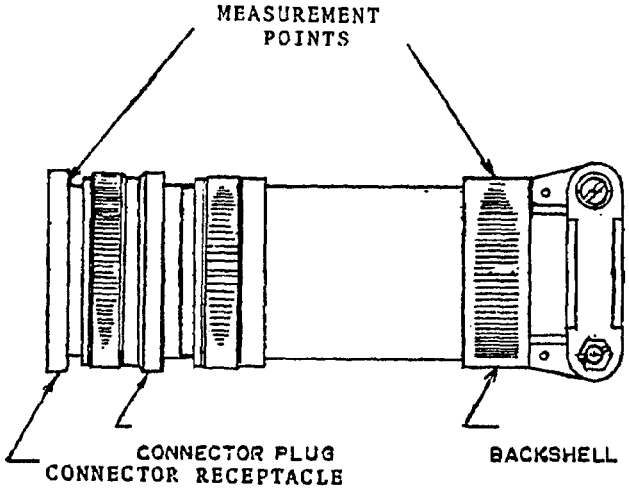

FIGURE 11. Shell Conductivity test setup (accessories and connectors)

Source: https://assist.dla.mil -- Downloaded: 2016-11-16T10:03Z
Check the source to verify that this is the current version before use.

4.6.19 Contact installing and removal force (maintenance aging). With the grommet relaxed, 100 percent of the contacts shall be removed and reinserted using the applicable tools specified in 3.4.1.2. The forces required to insert and remove the unlocked contacts shall be measured. Counterpart connectors shall be mated and unmated ten times The same contacts shall then be removed and reinserted nine more times. The contact insertion and removal forces shall be measured on the ninth cycle (See 3.23).

4.6.20 Drop. The complete plug assembly with backshells and protective covers shall be tested. The cable or the cable and conduit shall extend 84 inches from the base of the connector assembly to the pivot (See Figure 12). The open end of the cable shall be pivoted at a point 24 inches +1 inch -0 inch above the horizontal surface of solid adequately aged concrete. The pivot shall be capable of rotating 360° and shall not impede or retard the free fall connector to the striking surface. The connector shall be raised to a point so that the base of the connector is 72 inches +6, -0 above the striking surface and allowed to free fall to the striking surface. The connector shall be dropped ten times, rotating the connector after each free fall, so that the connector strikes the concrete in each of 10 different radial positions approximately 36° apart. The cable shall then be removed from the fixture and the shells and inserts examined (See Figure 12).

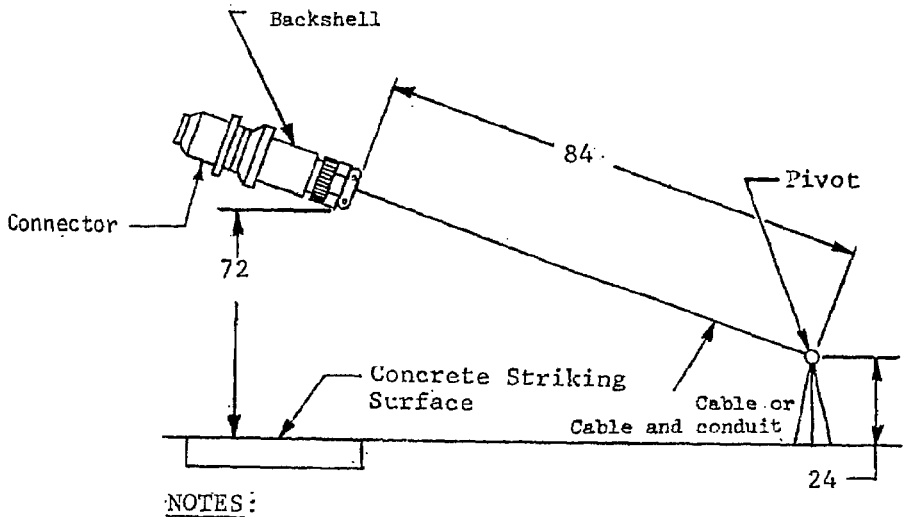

NOTES:

1. Dimensions are in inches.

Figure 12. Typical fixture for drop test.

Source: https://assist.dla.mil -- Downloaded: 2016-11-16T10:03Z
Check the source to verify that this is the current version before use.

4.6.21 EMI shielding effectiveness. The connectors under test shall be mounted to a shielded room wall as shown in Figure 13. Mounting should simulate normal mounting procedures and be detailed in the test report. Two identical 1.5 meter long test cables, one unshielded; one shielded, will be required. Shielding effectiveness of the shielded cable and connector will be obtained as follows:

a. Connect the unshielded test cable to the connectors. The cable should be supported horizontally on a wooden (or other non-conducting material) table, at a height on one meter or greater above the floor (or ground plane) and arranged in a semi-circle having a radius of approximately 0.45 meters.

b. Place the receiver antenna in front of the connectors, centered between the connectors, one meter distance fron the plate containing the connectors and 0.5 meters above the plane of the cable. The antennas used in these tests shall be linearly polarized. Circularly polarized antennas such as the conical log spiral antennas shall not be used.

c. Connect the signal source to the test cable as shown in Figure 13. A 50 ohm matching termination should be used at the generator output. If the generator is not calibrated the output should be monitored with a voltmeter or power meter.

d. Connect the receiver, either a tuned EMI receiver or spectrum analyzer, to the receive antenna.

The test wires will be selected such that the wires are on opposite sides and at the outer perimeter of the connector. A 50 ohm load will be connected between the wire pairs at the other connector. With the receiver and signal generator set to 100 MHz, increase the signal generator output until a level at least 100 db above the menimum discernable level of the receiver is obtained. Record both the generator output and received level. Continue recording output and received levels as the generators are swept over the 100 MHz - 1000 MHz frequency range maintaining at least 100 db dynamic range. The received level may be photographically recorded if a spectrum analyzer is used, otherwise record at least three frequencies per octave. Replace the unshielded cable and connector with the shielded connector and cable (See Figure 13) and repeat the measurements using the same signal generator levels as obtained in Step 5. Record the received levels. Shielding effectiveness is the difference in received levels obtained in Steps (e) and (f)

4.6.22 Pin contact stability. The unmated connectors shall have 10 percent of their pin contacts subjected to this test. Gage pins conforming dimensionally to Figure 14 shall be used. The connector shall be held in a holding device. The forces specified in 3.4.2.6 shall be applied to the exposed rod as shown on Figure 15. The rate of load application shall not exceed 1 inch (25.4mm) per minute. The total pin tip displacement shall be measured as shown on Figure 15. The unmated connector shall have all cavities loaded with contacts in which minimum OD wire (See Table III) has been crimped. The unmated connectors shall have no backshells attached.

Source: https://assist.dla.mil -- Downloaded: 2016-11-16T10:03Z
Check the source to verify that this is the current version before use.

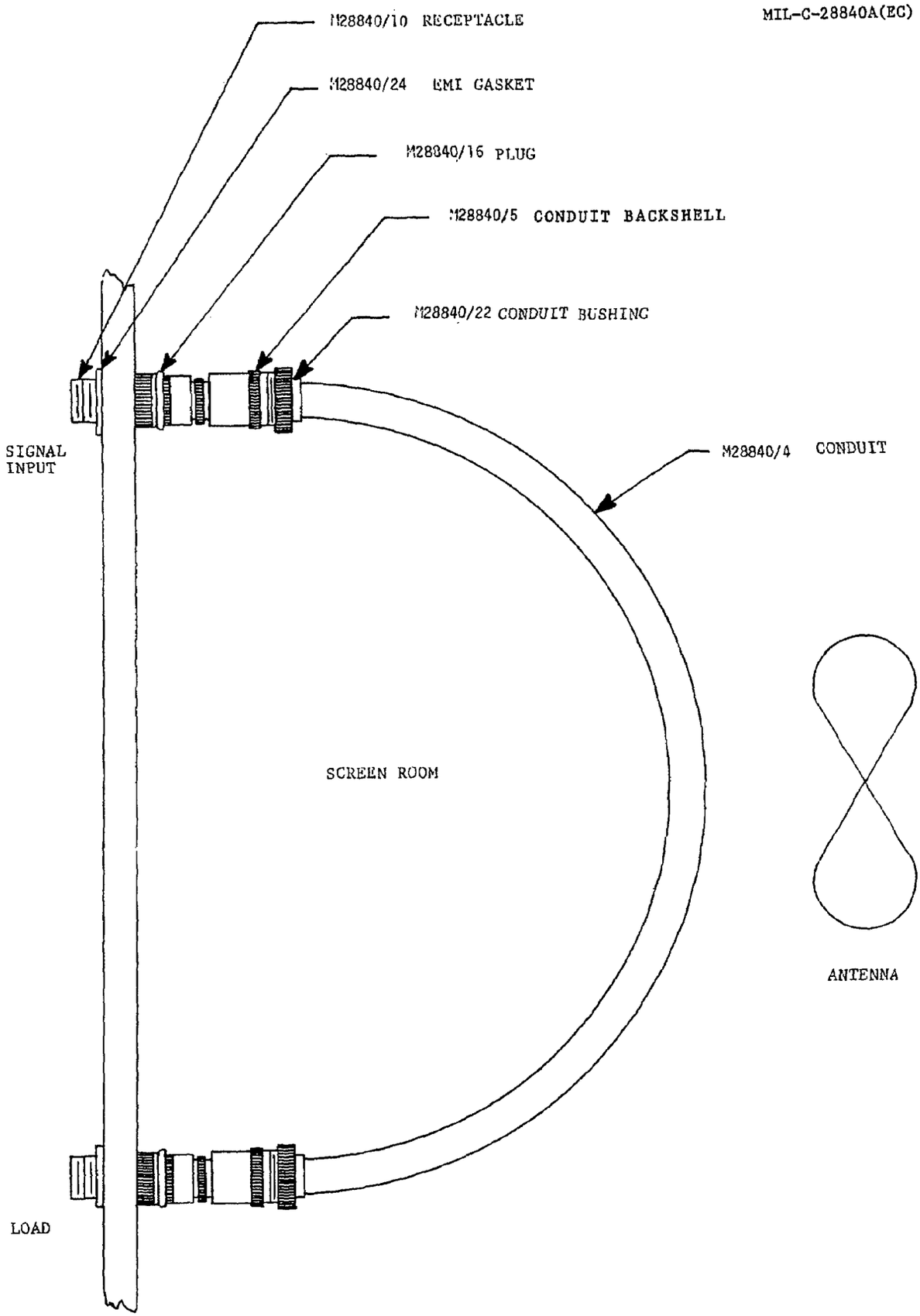

FIGURE 13. Electromagnetic Interference Test

Source: https://assist.dla.mil -- Downloaded: 2016-11-16T10:03Z
Check the source to verify that this is the current version before use.

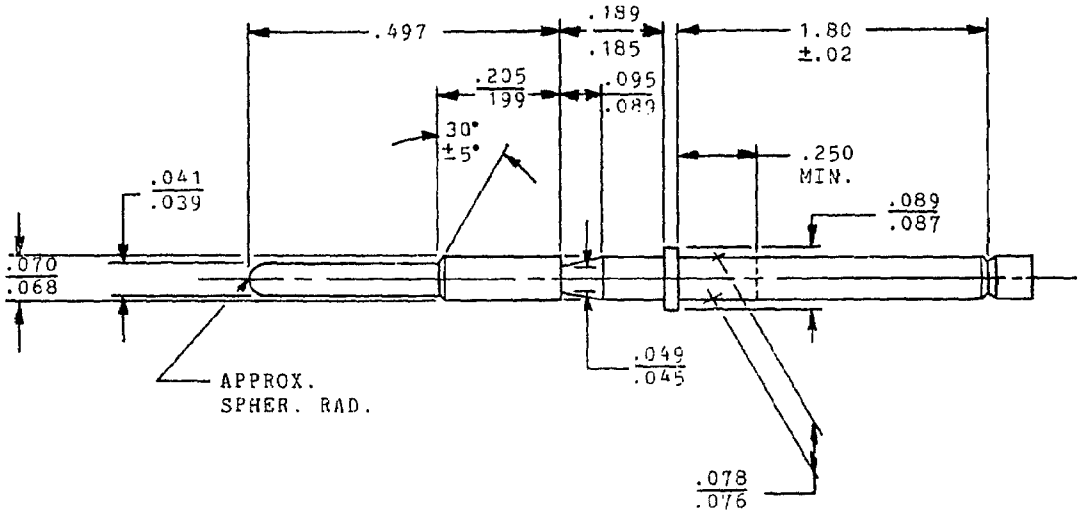

INCHES	MM
.020	.51
.039	.99
.041	1.04
.045	1.14
.049	1.24
.068	1.73
.070	1.78
.076	1.93
.078	1.98
.087	2.21
.089	2.26
.095	2.41
.180	4.57
.185	4.70
.189	4.80
.199	5.05
.205	5.21
.250	6.35
.497	12.62

NOTES:

1. Material: Hardened tool steel.
2. Finish: 32 microinch polished.
3. Design of rear extension is optional, but must have a groove provided as indicated.
4. Diminsions are in inches.
5. Metric equivalents are given for general information only and are based upon 1.00 inch = 25.4 mm.
6. All diameters concentric to each other within a .004 T.I.R.

FIGURE 14. Test gage, pin, gage location and retention.

Source: https://assist.dla.mil -- Downloaded: 2016-11-16T10:03Z
Check the source to verify that this is the current version before use.

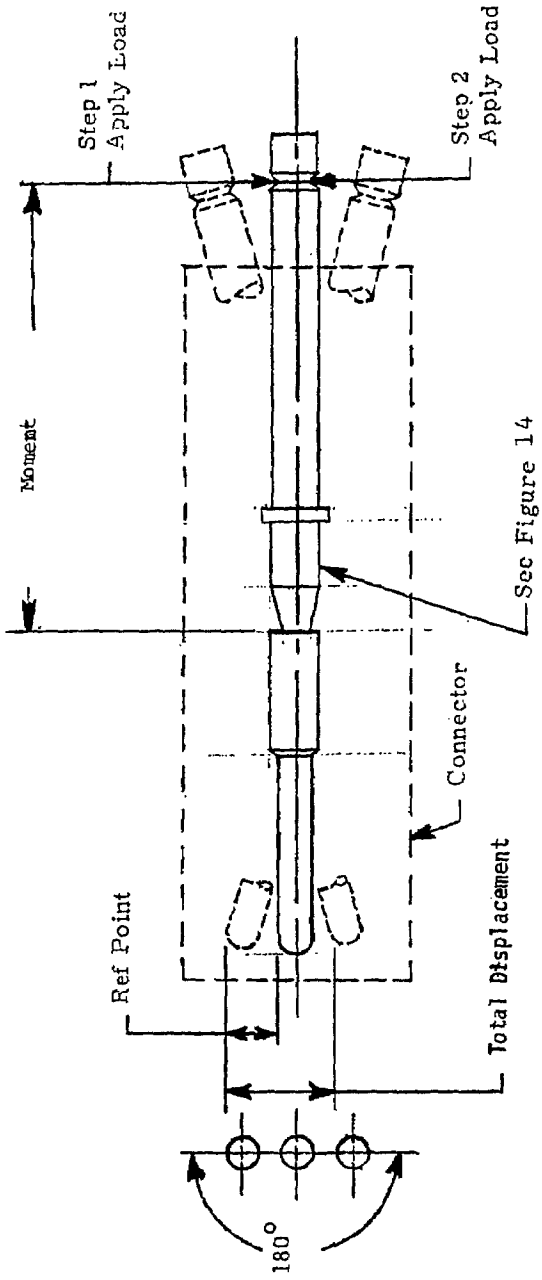

Step 1 - Apply load to determine reference point.
Step 2 - Apply load in opposite direction (180°) and measure total displacement.

FIGURE 15. Pin contact stability test.

Source: https://assist.dla.mil -- Downloaded: 2016-11-16T10:03Z
Check the source to verify that this is the current version before use.

5. Packaging. The preparation for delivery requirements specified herein apply only for direct Government procurements. Preparation for delivery requirements of referenced documents listed in Section 2 do not apply unless specifically stated in the contract or order. Preparation for delivery requirements for products procured by contractors shall be specified in the individual order.

5.1 Packaging requirements. The packaging requirements for these connectors shall be in accordance with MIL-C-55330.

6. Notes.

6.1 Intended use. The various classes and types of connectors are intended for application as follows:

a. MIL-C-28840/10 - are receptacles intended for wall or bulkhead flange mounting and for use with conduit backshells, or cable clamps.

b. MIL-C-28840/11 - are receptacles intended for use at the end of a cable where mounting provisions are not required.

c. MIL-C-28840/12 - are receptacles intended for mounting on shielding boxes and equipment cases. They have no fittings and are for use with open wiring.

d. MIL-C-28840/14 - are receptacles intended for wall or bulkhead jam nut mounting and for use with conduit or a cable clamp.

e. MIL-C-28840/16 - are plugs intended for use at the ned of a cable to be mated with a receptacle.

f. MIL-C-28840/18 - are 90^0 plugs intended for use at the end of a cable where space does not permit the use of a straight plug.

g. Connectors are intended for use with jacketed cable where the connectors will be subjected to high-impact shock conditions beyond the capabilities of the other class connectors. These connectors have crimp contacts which are removed from the front of the connector and a wire sealing range capable of sealing on Naval shipboard cable. These connectors also have a specified shell conductivity.

h. These connectors are intended for use where the connector will be subject to heavy condensation and rapid changes in temperature or pressure, and where the connector is subject to high vibratory conditions. A type MIL-C-28840/12 receptacle does not provide moisture or vibration protection at its back end, and a type MIL-C-28840/10 or MIL-C-28840/11 should be used if such protection is desired.

6.1.1 Wire sizes to be used with contacts. Satisfactory performance of connector connectors will be obtained if wire sizes are governed by Table III. For wire diameters less than specified in Table III, shrink-fit sleeving should be used over the wire. Where two or more wires are used in a wire barrel, moisture sealing is not obtainable.

6.2 Ordering data. Procurement documents should specify:

a. Title, number and date of this specification.

b. Title, number, and date of the applicable specification sheet and the complete part number (See 3.1 and 1.2).

c. For indirect shipment, these connectors may be furnished without contacts or grommet sealing plugs (See 3.4.1 and 3.4.6.1).

d. Length and tolerance of conduit.

Source: https://assist.dla.mil -- Downloaded: 2016-11-16T10:03Z
Check the source to verify that this is the current version before use.

6.2.1 Accessory hardware. Accessory hardware, such as dust covers or mounting hardware is shown on separate drawings.

6.2.2 Crimp contacts. Crimp contacts may be ordered in bulk in accordance with MIL-C-39029.

6.2.3 Connector part numbers. The following applies to connector part numbers:

a. Part numbers should be in accordance with the detail document covering the individual connector (See 3.1).

6.3 Qualification. With respect to products requiring qualification, awards will be made only for products which are at the time set for opening of bids, qualified for inclusion in the applicable qualified products list (QPL), whether or not such products have actually been so listed by that date. The attention of the suppliers is called to this requirement, and manufacturers are urged to arrange to have the products that they propose to offer to the Federal Government tested for qualification in order that they may be eligible to be awarded contracts or orders for the products covered by this specification. The activity responsible for the qualified products list is the Naval Electronic Systems Command, Department of the Navy, Code 8112, Washington, D.C. 20360. Information pertaining to qualification of products may be obtained from the Naval Electronic Systems Command or the Naval Weapons Support Center (ATTN: Code 6025) Crane, Indiana 47522, agent for administration for the QPL. Application for qualification tests shall be made in accordance with Provisions Governing Qualification (See 6.3.1).

6.3.1 Copies of "Provisions Governing Qualification" may be obtained upon application to Commanding Officer, Naval Publications and Forms Center, 5801 Tabor Avenue, Philadelphia, Pennsylvania 19120.

6.4 Definitions. (See MIL-STD-1353).

6.5 Working voltage. The maximum recommended sea level working voltage is 200 volts RMS.

6.6 Cable/connector interface. MIL-STD-1683 shall be used as a guide for the selection of MIL-C-915 cables.

Preparing activity:
Navy - EC
(Project 5935-N174)

Custodians:
NAVY-EC

Review activities:
NAVY-SH

User activities:
NAVY-OS, YD

Source: https://assist.dla.mil -- Downloaded: 2016-11-16T10:03Z
Check the source to verify that this is the current version before use.