METRIC

MIL-STD-1678-6A
10 February 2016
MIL-STD-1678-6
W/CHANGE 1
27 August 2014

DEPARTMENT OF DEFENSE
STANDARD PRACTICE

FIBER OPTIC CABLING SYSTEMS REQUIREMENTS AND MEASUREMENTS

(Part 6: PARTS AND SUPPORT EQUIPMENT COMMONALITY AND STANDARDIZATION REQUIREMENTS)

(PART 6 OF 6 PARTS)

AMSC N/A

AREA 60GP

Source: https://assist.dla.mil -- Downloaded: 2016-12-31T21:10Z
Check the source to verify that this is the current version before use.

FOREWORD

1. This Department of Defense Standard Practice is approved for use by the DLA Land and Maritime, Defense Logistics Agency, and is available for use by all Departments and Agencies of the Department of Defense.

2. Comments, suggestions or questions on this document should be addressed to DLA Land and Maritime, ATTN: VAT, Post Office Box 3990, Columbus, OH 43218-3990, or emailed to (FiberOpticGroup@dla.mil). Since contact information can change, you may want to verify the currency of this address information using the ASSIST Online database at https://assist.dla.mil/.

3. This standard practice provides detailed information and guidance to personnel concerned with ensuring standardization of fiber optic cable topologies (optical fiber cabling and associated components) on military mobile vehicles used in air, land, and sea applications. In general, the requirements and methods specified herein are not identifiable to any specific mobile vehicle class or type, but are intended to standardize and minimize variations in requirements, test setups, test measurement procedures, test sample fabrication configurations, and other aspects that must be addressed for completeness. Where specified, constrains for usage or platform types will be listed. The term "platform" will be used to refer to the military mobile vehicles in general or, where designated, one particular class (such as "aircraft platform") or one particular type within that class (such as "F-35").

4. In order to provide flexibility in the use and update of the different aspects for requirements and methods, this standard practice is issued in six parts; as follows:

Part 1: Design, maintenance, and installation requirements. This part addresses design requirements for platforms that use cable harnesses as the means to transport data through optical fiber among communication network and end user equipment. Larger platforms that route trunk cables through cableways and drop cables to the end user (application equipment), can cite applicable requirements in Part 1 of the Standard Practice and augment them with use of MIL-HDBK-2051 and MIL-STD-2042 as appropriate. Surface ships and submarines are to use MIL-HDBK-2051, MIL-STD-2052, and MIL-STD-2042 in lieu of part 1 of this Standard Practice with the exception of Personnel Proficiency. For Personnel Proficiency, Surface ships and submarines are to use Navy shipboard and application training requirements in requirement 1306 of this Standard Practice.

Part 2 Optical measurements. Part 2 of this standard addresses further details to refine or bound (constrain) the performance of each optical test measurement addressed. The test methods, such as those in a TIA-455 series standard or military standard/specification, are cited already. This part of the standard practice augments the test method in the standard or specification to ensure consistency with setup and measurement procedure. This consistency minimizes variations when comparing data obtained from different test laboratories (including commercial, vendor, Government, and Government contractor).

Part 3 Physical, mechanical, environmental and material measurements. Part 3 of this standard addresses further details to refine or bound (constrain) the performance of each physical, mechanical, environmental and material test measurement or inspection addressed. The test methods, such as those in a TIA-455 series standard or military standard/specification, are cited already. This part of the standard practice augments the test method to ensure consistency with setup, measurement procedure, data recording/analysis and other factors critical to conducting or evaluating test performance. This consistency minimizes variations when comparing data obtained from different test laboratories (including commercial, vendor, Government and Government contractor).

Part 4 Test sample preparation/fabrication requirements. Part 4 of this standard addresses further details to refine or bound (constrain) the preparation and fabrication of test samples for the fiber optic components addressed. Fabrication methods, such as those in the Shipboard installation standard, MIL-STD-2042, or in the general series aircraft maintainer's manual, NAVAIR 01-1A-505-4/T.O. 1-1A-14-4/TM 1-1500-323-24-4, are cited already. This part of the standard practice augments the fabrication method to ensure consistency of the test configuration

Part 5 Design phase, supplemental and legacy measurements. Tests that are more unique to the design phase or tests and inspections that are not just primarily for qualification (supplemental measurements) are addressed in Part 5 of this standard practice. Also, legacy test methods and legacy criteria measurements are provided in this part of the standard practice with the recommended replacement method for the former (legacy) DOD-STD-1678 methods. These former DOD-STD-1678 test methods are listed under the constraint that

Source: https://assist.dla.mil -- Downloaded: 2016-12-31T21:10Z
Check the source to verify that this is the current version before use.

they be used only with the specific military specifications or commercial standards in which they are cited. The intent is to delete each DOD-STD-1678 test method from that standard practice in Part 5 once its reference from military specification or commercial standard is removed.

Part 6 Parts and support equipment commonality and standardization requirements. This part of the Standard Practice addresses component part and support equipment standardization requirements for platforms that transport data through optical fiber among communication network and end user equipment. Surface ships and submarines are to use the Navy Shipboard Fiber Optic Recommended Components Parts List in addition to part 6 of this Standard Practice. Likewise, larger platforms that route trunk cables through cableways and drop cables to the end user (application equipment), can cite applicable requirements in Part 6 of the Standard Practice, cite the Navy shipboard Fiber Optic Recommended Components Parts List, or both, as appropriate. The Navy shipboard Fiber Optic Recommended Components Parts List can be obtained at the Navy Shipboard fiber optic website. Due to the dynamic nature of web addresses, the current website URL can be obtained by e-mailing DLGR_NSWC_FOWEB@navy.mil with the subject line "WEBSITE URL REQUEST". An automated reply will contain the current web address.

Source: https://assist.dla.mil -- Downloaded: 2016-12-31T21:10Z
Check the source to verify that this is the current version before use.

CONTENTS

PARAGRAPH		PAGE
1. SCOPE		1
1.1	Scope	1
1.1.1	Applicability	1
1.2	Intended used for Part 6	1
1.2.1	Primary use of Part 6	1
1.2.2	Supplemental use	1
1.2.3	General constraints on use	1
2. APPLICABLE DOCUMENTS		2
2.1	General	2
2.2	Government documents	2
2.2.1	Specifications, standards and handbooks	2
2.2.2	Other Government documents, drawings and publications	2
2.3	Non-Government publications	2
2.4	Order of precedence	2
3. DEFINITIONS		3
3.1	General fiber optics terms	3
3.2	Acronyms	3
3.3	End user equipment	3
3.4	Local cable	3
3.5	Part	3
3.6	Platform	3
3.7	Platform class	3
3.8	Platform type	3
3.9	Support equipment	3
4. GENERAL REQUIREMENTS		4
4.1	Consistent approach throughout system engineering process	4
4.1.1	Selection considerations	4
4.2	Reduction of total ownership cost	4
4.3	Operating wavelength	4
4.3.1	Default	4
4.3.2	Default, shipboard	4
4.4	Consensus of design requirements	4
5. DETAILED REQUIREMENTS		5
5.1	Parts	5
5.2	Support equipment	5
5.3	Requirements list for parts and support equipment	5
6. NOTES		6
6.1	Intended use	6
6.2	Acquisition documents	6
6.3	Subject term (key word) listing	6
6.4	Supersession data	6
6.5	Changes from previous issue	6

Source: https://assist.dla.mil -- Downloaded: 2016-12-31T21:10Z
Check the source to verify that this is the current version before use.

PARAGRAPH PAGE

REQUIREMENTS

PARTS STANDARDIZATION REQUIREMENTS FOR CABLE HARNESS CONFIGURATIONS
6101 Qualified multiple termini connector components 8
6102 Single Fiber Cable 14
6103 Epoxies, adhesives, and gels 17
6104 Convoluted tubing 19
6105 Backshell, solid 22
6106 Backshell, split 27
6107 EMI retention nut 31
6108 Binding and holding components for cabling assembly 34
6109 Cable wrap 37
6110 Plastic dust caps 39

SUPPORT EQUIPMENT STANDARDIZATION REQUIREMENTS FOR CABLE HARNESS CONFIGURATIONS
6201 Ferrule end face consumable cleaning supplies and equipment 44
6202 Ferrule end face inspection equipment 48
6203 Test and troubleshooting equipment 54
6204 Termination equipment 59
6205 Optical loss measurement supplemental items 68
6206 Connector accessories assembly and repair tools and equipment 79
6207 Measurement quality jumpers 85
6208 Mechanical splice assembly equipment 100
6209 Post installation inspection tools 105

INTERFACE REQUIREMENTS FOR PARTS AND SUPPORT EQUIPMENT
6301 Termini retention clip seating tester interface requirements 108
6302 Terminus removal tool interface requirements (for MIL-PRF-64266 CONNECTORS) 116
6303 Ferrule end face cleaning swab and tool interface requirements (through MIL-PRF-64266 test terminus adapter) 120
6304 Polishing puck interface requirements (for PC and APC polishing of ferrule end faces) 124
6305 Ferrule length gauge interface requirements (for protrusion length of ferrule end faces) 129

PERFORMANCE REQUIREMENTS FOR PARTS AND SUPPORT EQUIPMENT
6401 Single mode optical loss test set (OLTS) performance requirements 137
6402 Multmode optical loss test set (OLTS) performance requirements 149
6403 Polishing approval process criteria for use of a machine polisher with alternate polishing materials 162
6404 Reporting and design requirements for lithium batteries 169

Source: https://assist.dla.mil -- Downloaded: 2016-12-31T21:10Z
Check the source to verify that this is the current version before use.

1. SCOPE

1.1 Scope. Part 6 of this standard practice provides detailed commonality and standardization requirements of fiber optic parts and support equipment for platforms that use cable harnesses as the means to transport data through optical fiber among communication network devices and end user equipment.

1.1.1 Applicability. These criteria apply to platforms in which the fiber optic topology (fiber cable plant, local cabling, and components to end used equipment such as WRA – weapons replaceable assembly, LRM – line replaceable module, LRU – line replaceable unit) is in the form of fiber optic harnesses. Larger platforms that route trunk cables through cableways and drop cables to the end user (application equipment), may cite other type cabling components as appropriate in lieu of the cabling in Part 6 of this Standard Practice. Surface ships and submarines, are to refer to MIL-STD-2042 in lieu of Part 6 of this Standard Practice. These criteria are intended primarily for new construction; however, they are also applicable for conversions or alterations of existing platforms. The rapidly changing state of the art in fiber optic technology makes it essential that some degree of flexibility be exercised in enforcing this document. When there is a conflict between this document and the platform specification or contract, the platform specification or contract will take precedence. Where platform design is such that the requirements herein cannot be implemented, users will submit new requirements or modifications of existing requirements to consider for incorporation into this standard practice to: DLA Land and Maritime, ATTN: VAT, Post Office Box 3990, Columbus, OH 43218-3990, or emailed to (FiberOpticGroup@dla.mil).

1.2 Intended uses for Part 6.

1.2.1 Primary use of Part 6. Part 6 of this standard practice was prepared primarily to ensure commonality and standardization (consistency) by listing those fiber optic parts and support equipment found suitable for use and specified in the General Series Technical Manual NAVAIR 01-1A-505-4/T.O. 1-1A-14-4/TM 1-1500-323-24-4.

1.2.2 Supplemental use. Part 6 of this standard practice contains information that will be considered during the selection process. Selection of the fiber optic components and support equipment listed herein is intended to reduce the logistics support footprint and total ownership cost.

1.2.3 General constraints on use. Part 6 of this standard practice is not intended to be used in lieu of a Platform Office identifying and specifying parts and support equipment unique to that platform's application.

Source: https://assist.dla.mil -- Downloaded: 2016-12-31T21:10Z
Check the source to verify that this is the current version before use.

2. APPLICABLE DOCUMENTS

2.1 General. The documents listed in this section are specified in sections 3, 4, and 5 of this standard. This section does not include documents cited in other sections of this standard or recommended for additional information or as examples. While every effort has been made to ensure the completeness of this list, document users are cautioned that they must meet all specified requirements of documents cited in sections 3, 4, and 5 of this standard, whether or not they are listed.

2.2 Government documents.

2.2.1 Specifications, standards, and handbooks. The following specifications, standards, and handbooks form a part of this document to the extent specified herein. Unless otherwise specified, the issues of these documents are those cited in the solicitation or contract.

DEPARTMENT OF DEFENSE STANDARD

MIL-STD-1678-1- Fiber Optic Cabling Systems Requirements and Measurements, Part 1: Design, Installation and Maintenance Requirements.

(Copies of these documents are available online at http://quicksearch.dla.mil/ or from the Standardization Document Order Desk, 700 Robbins Avenue, Building 4D, Philadelphia, PA 19111-5094.)

2.2.2 Other Government documents, drawings, and publications. The following other Government documents, drawings, and publications form a part of this standard practice to the extent specified herein. Unless otherwise specified, the issues are those cited in the solicitation or contract.

NAVAIR 01-1A-505-4/ T.O. 1-1A-14-4/ TM 1-1500-323-24-4- Installation and Testing Practices Aircraft Fiber Optic Cabling.

(A copy of this document is available online at: https://mynatec.navair.navy.mil. NATEC has three difference processes to obtain the manual, depending on if you are Government personnel (military and civilians), Contractors with a Government contract, or everyone else. If unable to access this Web Site or require further assistance, contact (1) NATEC Customer Service: 619.545.1888, (2) NATEC Website Status Hotline: 619.545.1706, or (3) NATEC Customer Service E-mail: nani_customerservice@navy.mil.)

2.3 Non-Government publications. The following documents form a part of this document to the extent specified herein. Unless otherwise specified, the issues of these documents are cited in the solicitation or contract.

LIA/LASER – LASER INSTITUTE of AMERICA

LIA Z136.2 - Safe Use of Optical Fiber Communication Systems Utilizing Laser Diode and LED Sources.

(Copies are available online at http://www.lia.org or can be obtained from the LIA - LIA/LASER - Laser Institute of America, 12424 Research Parkway, Suite 125, Orlando, FL. 32826.)

TELECOMMUNICATIONS INDUSTRY ASSOCIATION

TIA-440- Fiber Optic Terminology.

(Copies are available online at www.tiaonline.org or from Telecommunications Industry Association (TIA), 2500 Wilson Boulevard, Suite 300, Arlington VA 22201.)

2.4 Order of precedence. Unless otherwise noted herein or in the contract, in the event of a conflict between the text of this document and the references cited herein, the text of this document takes precedence. Nothing in this document, however, supersedes applicable laws and regulations unless a specific exemption has been obtained.

Source: https://assist.dla.mil -- Downloaded: 2016-12-31T21:10Z
Check the source to verify that this is the current version before use.

3. DEFINITIONS

3.1 General fiber optics terms. Definitions for general fiber optic terms used din this standard practice are in accordance with TIA440 “except as otherswise specified in 3.1.1 and herein”. Definitions for other terms as they are used in this standard practice are given in the following paragraphs.

3.1.1 Standard ization for usage of terms (spelling).

a. Fiber optic. The word "optic" appears without an "s"' when the term "fiber optic" is used as an adjective, such as "fiber optic cable", "fiber optic component". Example of a usage is "The fiber optic system is comprised of fiber optic cable with fiber optic connectors, but without any fiber optic splices."

b. Fiber optics. The word "optics" appears with an "s"' when the term "fiber optics" is used as a noun, such as " fully fiber optics". Example of a usage is "The system is comprised of both wiring media and fiber optics."

c. Multimode. The word "multimode" appears as one word as opposed to two words or two words separated by a hyphen. Example of a usage is "The cable in the system is comprised of fiber optic, multimode cable."

d. Single mode. The word "single mode" appears as two words as opposed to one word or two words separated by a hyphen. Example of a usage is "The cable in the system is comprised of fiber optic, single mode cable."

3.2 Acronyms. The following acronyms are used in this standard practice:

ATR	Air transport rack
JFOWG	Joint Fiber Optic Working Group
LRC	Line replaceable component
LRM	Line replaceable module
LRU	Line replaceable unit
MQJ	Measurement quality jumper
OFCS	Optical fiber communication system
SE	Support equipment
WRA	Weapons replaceable assembly

3.3 End user equipment. This equipment is either the source or destination of an optical signal. This equipment can be a cabinet, case, panel, or device. The devices include WRA: Weapons replaceable assembly, LRM: Line replaceable module, and LRU: Line replaceable unit.

3.4 Local cable. A fiber optic cable that runs between end user equipment.

3.5 Part. A fiber optic component or other accessory that comprises a piece of a fiber optic cable harness.

3.6 Platform. A military mobile vehicle used in air, land, or sea applications.

3.7 Platform class. A general category of military mobile vehicles such as aircraft, aircraft fixed wing, aircraft rotary, truck, cargo truck, armored assault vehicle, ship, surface ship, or submarine.

3.8 Platform type. A specific military mobile vehicle such as an F-35 under aircraft or DDG-51 under ship.

3.9 Support equipment. Equipment required to maintain, test, or operate an item, or facility, in its intended environment.

Source: https://assist.dla.mil -- Downloaded: 2016-12-31T21:10Z
Check the source to verify that this is the current version before use.

4. GENERAL REQUIREMENTS

4.1 Consistent approach throughout the processes for parts and support equipment selection. A consistent approach for this selection shall consist of implementing commonality and standardization throughout the processes of selecting fiber optic parts and support equipment. Fiber optic part and support equipment selection is not isolated by platform and does impact the overall military total ownership cost. Use of a consistent approach will provide increased assurance that a fiber optic system will perform as designed for the life of the system.

4.1.1 Selection considerations. These considerations shall include the use of standardized parts and support equipment contained as standardization requirements in this standard practice. The JFOWG has evaluated the parts and support equipment listed and has determined the listed items to be most suitable for use in the intended application. The JFOWG will reevaluate on a case by case basis and add or modify items as the need arises.

4.2 Reduction of total ownership cost. Fiber optic requirements shall be based on total ownership cost. Total ownership cost criteria to incorporate into the requirements shall include:

a. Use of standard processes and practices as specified in MIL-STD-1678-1.

b. Use of standard parts as specified in MIL-STD-1678-1 and this Standard Practice.

c. Use of standard support equipment as specified in this Standard Practice.

d. Reducing training costs by applying 4.2a and 4.2b into system design as specified in MIL-STD-1678-1 and by applying commonality in use of the parts and support equipment as specified in Part 6 of this Standard Practice.

e. Reducing logistic support costs by implementing 4.2.a through 4.2c into system design as specified in MIL-STD-1678-1 and by implementing standardization of parts and support equipment as specified in Part 6 of this Standard Practice.

f. Use practices that improve reliability, maintainability, durability, performance, reducibility, quality, and safety over the entire expected service life of the platform.

(1) Laser safety precautions. The classification of a laser is based on the ability of the optical beam to cause damage to the eye. Under normal operating conditions, the laser diode found in an optical fiber communication system (OFCS) is inherently an eye safe system; but, when an optical fiber connection is broken and optical viewing instruments are used, it is possible that hazardous energy can enter the eye. For this reason, four service group hazard classes have been devised to indicate the degree of hazard and required hazard control measures. Refer to LIA Z136.2 for a full technical definition. Refer to subordinate work package 004 01 of NAVAIR 01-1A-505-4/T.O. 1-1A-14-4/TM 1-1500-323-24-4 for a laser safety refresher summary.

(2) Fiber optic safety precautions. The fiber optic safety precautions listed in subordinate work package 004 01 of NAVAIR 01-1A-505-4/T.O. 1-1A-14-4/TM 1-1500-323-24-4 shall apply.

g. Use practices that ensure interoperability of fiber optic parts and support equipment among platform types and classes.

4.3 Operating wavelength. Unless otherwise specified, the default operating wavelengths in 4.3.1 shall be specified as the standard transmission wavelength for the platform. Where feasible, wavelength of operation shall be standardized for each class of platform (see 3 under foreword).

4.3.1 Default. System shall be designed to operate at a nominal wavelength of 850 nanometers (nm) for multimode optical fibers and at 1,550 nm for single mode optical fibers.

4.3.2 Default, shipboard. System shall be designed to operate at a nominal wavelength of 1,300 nanometers (nm) for multimode optical fibers and at 1,310 nm for single mode optical fibers. Other wavelengths of operation may be specified, but are less preferred.

4.4 Consensus of requirements. The Joint Fiber Optic Working Group (JFOWG) shall be the means to reach consensus on standardization of new/revised part and support equipment requirements, identify new requirements and new technologies that permit its rapid introduction, and provide those requirements to update Part 6 of this Standard Practice.

Source: https://assist.dla.mil -- Downloaded: 2016-12-31T21:10Z
Check the source to verify that this is the current version before use.

5. DETAILED REQUIREMENTS

5.1 Parts. Requirements for the fiber optic parts shall be implemented as specified in 5.1.1 through 5.1.10.

5.1.1 Multiple termini connector components. Parts shall conform to Requirement 6101.

5.1.2 Cable. Parts shall confirm to Requirement 6102.

5.1.3 Epoxies and adhesives. Parts shall conform to Requirement 6103.

5.1.4 Convoluted tubing. Parts shall conform to Requirement 6104.

5.1.5 Backshell, solid, single fiber cables. Parts shall conform to Requirement 6105.

5.1.6 Backshell, split, single fiber cables. Parts shall conform to Requirement 6106.

5.1.7 EMI retention nut. Parts shall conform to Requirement 6107.

5.1.8 Other components for cabling assembly. Parts shall conform to Requirement 6108.

5.1.9 Cable wrap for cable assembly. Parts shall conform to Requirement 6109.

5.1.10 Plastic dust caps. Plastic dust caps shall conform to Requirement 6110.

5.2 Support equipment. Requirements for the fiber optic support equipment shall be implemented as specified in 5.2.6 through 5.2.9.

5.2.1 Ferrule end face consumable cleaning supplies and equipment. Support equipment shall conform to Requirement 6201.

5.2.2 Ferrule end face inspection equipment. Support equipment shall conform to Requirement 6202.

5.2.3 Test and troubleshooting equipment. Support equipment shall conform to Requirement 6203.

5.2.4 Termination equipment. Support equipment shall conform to Requirement 6204.

5.2.5 Optical loss measurement supplemental items. Support equipment shall conform to Requirement 6205.

5.2.6 Connector accessories assembly and repair tools and equipment. Support equipment shall conform to Requirement 6206.

5.2.7 Measurement Quality Jumpers. Measurement Quality Jumpers shall conform to Requirement 6207.

5.2.8 Mechanical splice assembly equipment. Mechanical splice assembly equipment shall conform to Requirement 6208.

5.2.9 Post installation inspection tools. Post installation inspection tools shall conform to Requirement 6209.

5.3 Interface requirements. Interface requirements for parts and support equipment shall be implemented as specified in 5.3.1 through 5.3.3.

5.3.1 Termini retention clip seating tester. Tool shall be constructed to Requirement 6301.

5.3.2 Termius removal tool interface requirements. Tool shall be constructed to Requirement 6302.

5.3.3 Ferrule end face cleaning swab and tool interface requirements. Tool shall be constructed to Requirement 6303.

5.3.4 Polishing puck interface requirements. Tool shall be constructed to Requirement 6304.

5.3.5 Ferrule length gauge interface requirements. Tool shall be constructed to Requirement 6305.

Source: https://assist.dla.mil -- Downloaded: 2016-12-31T21:10Z
Check the source to verify that this is the current version before use.

6. NOTES

(This section contains information of a general or explanatory nature that may be helpful, but is not mandatory.)

6.1 Intended use. The fiber optic parts and support equipment depicted in this Standard Practice are intended (were selected) for aircraft applications; however, they are applicable for other types of military mobile vehicles (also identified as platforms) that use cable harnesses as the means to transport data through optical fiber among communication network and end user equipment.

6.2 Acquisition requirements. Acquisition documents should specify the following:

Title, number, and date of this standard practice.

6.3 Subject term (key word) listing.

Fiber optic parts
Fiber optic components
Fiber optic support equipment
Fiber optic cabling
Measurement Quality Jumpers (MQJ)

6.4 Supersession data. The first six parts of MIL-STD-1678 replace superseded DOD-STD-1678 with completely new fiber optic requirements and measurements. With the exception of some legacy material in Part 5 of MIL-STD-1678, none of the fiber optic test and measurement material comprising superseded DOD-STD-1678 has been included. With the exceptions noted in Part 5 of this standard practice, this standard practice should be applied in lieu of the legacy methods in superseded DOD-STD-1678. Part 6 of this Standard Practice replaces superseded NAVSEA Drawings 7612821, 7613069, 8283420 and 8329100 for JFOWG recommended Measurement Quality Jumpers (MQJ), JFOWG recommended support equipment, Termini retention clip seating tester, and JFOWG recommended fiber optic parts, respectively.

6.5 Changes from previous issue. The margins of this specification are marked with vertical lines to indicate where changes from the previous issue were made. This was done as a convenience only and the Government assumes no liability whatsoever for any inaccuracies in these notations. Bidders and contractors are cautioned to evaluate the requirements of this document based on the entire content irrespective of the marginal notations and relationship to the last previous issue.

Source: https://assist.dla.mil -- Downloaded: 2016-12-31T21:10Z
Check the source to verify that this is the current version before use.

PARTS STANDARDIZATION REQUIREMENTS FOR CABLE HARNESS CONFIGURATIONS

(6101 – 6110)

Source: https://assist.dla.mil -- Downloaded: 2016-12-31T21:10Z
Check the source to verify that this is the current version before use.

QUALIFIED MULTIPLE TERMINI CONNECTOR COMPONENTS.

1. Purpose. This requirement refines or bounds (constrains) the selection of the fiber optic part referred to as the multiple termini connector and components (termini) associated with the connector. This requirement is intended for developmental, prototype, production, rework, and modification programs on military platform fiber optic cable assemblies.

2. Applicable documents.

2.1 General. The documents listed in this section are specified in sections 3, 4, and 5 of this standard practice. This section does not include documents cited in other sections of this standard practice or recommended for additional information or as examples. While every effort has been made to ensure the completeness of this list, document users are cautioned that they must meet all specified requirements of documents cited in sections 3, 4, and 5 of this standard practice, whether or not they are listed.

2.2 Government documents.

2.2.1 Specifications, standards, and handbooks. The following specifications, standards, and handbooks form a part of this document to the extent specified herein. Unless otherwise specified, the issues of these documents are those cited in the solicitation or contract.

DEPARTMENT OF DEFENSE SPECIFICATIONS

MIL-PRF-29504/4-	Termini, Fiber Optic, Connector, Removable, Environment Resisting, Pin Terminus, Size 16, Rear Release, MIL-DTL-38999, Series III.
MIL-PRF-29504/5-	Termini, Fiber Optic, Connector, Removable, Environment Resisting, Socket Terminus, Size 16, Rear Release, MIL-DTL-38999, Series III.
MIL-PRF-29504/18-	Termini, Fiber Optic, Connector, Removable, Environment Resisting, Genderless Terminus, Rear Release, Ceramic Ferrule, 1.25 MM Ferrule, (for MIL-PRF-64266 Connectors).
MIL-DTL-38999-	Connectors, Electrical, Circular, Miniature, High Density, Quick Disconnect, (Bayonet Threaded and Breech Coupling), General Specification for.
MIL-PRF-64266-	Connectors, Fiber Optic, Circular and Rectangular, Plug and Receptacle Style, Multiple Removable Genderless Termini, Environment Resisting General Specification for

(Copies of these documents are available online at http://quicksearch.dla.mil or from the Standardization Document Order Desk, 700 Robbins Avenue, Building 4D, Philadelphia, PA 19111-5094.)

2.3 Other Government documents, drawings, and publications. The following other Government documents, drawings, and publications form a part of this standard practice to the extent specified herein. Unless otherwise specified, the issues are these documents are those cited in the solicitation or contract.

NAVAIR 01-1A-505-4/ T.O. 1-1A-14-4/TM1-1500-232-24-4-	Installation and Testing Practices, Aircraft Fiber Optic Cabling

(A copy of this document is available online at: https://mynatec.navair.navy.mil. NATEC has three difference processes to obtain the manual, depending on if you are Government personnel (military and civilians), Contractors with a Government contract, or everyone else. If unable to access this Web Site or require further assistance, contact (1) NATEC Customer Service: 619.545.1888, (2) NATEC Website Status Hotline: 619.545.1706, or (3) NATEC Customer Service E-mail: nani_customerservice@navy.mil.)

2.4 Order of precedence. Unless otherwise noted herein or in the contract, in the event of a conflict between the text of this document and the references cited herein, the text of this document takes precedence. Nothing in this document, however, supersedes applicable laws and regulations unless a specific exemption has been obtained.

Source: https://assist.dla.mil -- Downloaded: 2016-12-31T21:10Z
Check the source to verify that this is the current version before use.

3. Definitions.

3.1 Connector, fiber optic. A device that permits repeated mating and couples the optical power between two optical fibers or two groups of optical fibers. A fiber optic connector must maintain fiber alignment without significant loss of optical power.

3.2 Connector, LC. The Lampert connector or Lucent connector (LC) is a single ferrule connector with a 1.25 mm (.05 inch) ferrule diameter, a push-pull style attachment configuration to the mating an LC-to-LC adapter/patch panel or equipment interface port, and a butt-jointed connector design. The LC connector has a small form factor configuration that has the same footprint as a RJ-45 receptacle.

3.3 Patch cords. Jumpers that transition the cabling from the cable harness to networking equipment or to patch panels. A fiber optic multiple termini connector is on one cable end and single ferrule connectors (such as an LC connector) are on the other end.

4. Requirements. Fiber optic multiple termini connectors shall be standardized for commonality compliance across platforms. Commonality compliance is that which bounds or restricts the parts to those recognized by the Joint Fiber Optic Working Group (JFOWG), cited in the General Series Technical Manual for Fiber Optic Cabling (NAVAIR 01-1A-505-4/T.O. 01-1A-14/TM 1-1500-232-24-4) and, as a result, cited in this Standard Practice.

5. Implementation. Unless otherwise specified by the applicable Platform Office, fiber optic multiple termini connectors used shall be restricted to those in table 6101 - I. These connectors include those that are a part of a fiber optic cable harness, those on the external surface of end user equipment interfacing with the cable harness, and those on patch cords. Table 6101 – II provides current qualified vendors for the MIL-PRF-29504/4 and MIL-PRF-29504/5 termini used with the MIL-DTL-38999 connector. Table 6101 – III and table 6101 – IV provide unqualified sources for unqualified MIL-PRF-29504/4 and MIL-PRF-29504/5 style 2 termini with metal ferrules (and ruby jeweled inserts) and for style 3 termini with crimp sleeves, respectively. Table 6101 – V shall be used for sources of unqualified MIL-PRF-29504/18 termini (used with the MIL-PRF-64266 connector). Once a source is qualified, the qualified source shall be used in lieu of other sources listed in these tables. Table 6101 – VI shall be used for sources of COTS ruggedized LC connectors. Table 6101-VII shall be used for sources of unqualified MIL-PRF-29504/20 termini. Table 6101-VIII shall be used for sources of COTS ruggedized SC connectors

TABLE 6101 – I. Qualified multiple termini connector components.

Description	MIL-SPEC	QPL
Qualified QPL components:		
Connector, circular, electrical, with removable contacts 1/	MIL-DTL-38999	QPL-38999
Termini, pin, for MIL-DTL-38999 connectors	M29504/04	QPL-29504
Termini, socket, for MIL-DTL-38999 connectors	M29504/05	QPL-29504

1/ Recommended connector configurations for standardization: D38999/20WB2SN, D38999/20WC4SM, D38999/20WF11FN, D38999/26WC4PN, D38999/26WF11PN, D38999/20WD5SN, D38999/20WJ37SN, D38999/26WD5PN, D38999/26WJ37PN, D38999/20WE8SN, D38999/26WB2PN, D38999/26WE8PN

REQUIREMENT 6101

Source: https://assist.dla.mil -- Downloaded: 2016-12-31T21:10Z
Check the source to verify that this is the current version before use.

TABLE 6101 – II. Qualified MIL-PRF-29504/04 and MIL-PRF-29504/05 style 1 termini.

Fiber size (core/cladding) µm	Ferrule hole diameter µm	Ferrule material	M29504/04 pin terminus			M29504/05 socket terminus		
			TICC style 1	CAGE 77820 PIN (style 1)	CAGE 06324 PIN (style 1)	TICC style 1	CAGE 77820 PIN (style 1)	CAGE 06324 PIN (style 1)
SM/125	125 +1/-0	Ceramic	4207	CF-198096-008		4236	CF-198095-008	
SM/125	125.5 +1/-0	Ceramic	4208		181-002-125	4237		181-001-125
SM, 50 & 62.5/125	126 +1/-0	Ceramic	4209	CF-198096-009	181-002-126S	4238	CF-198095-009	181-001-126S
50/125, 62.5/125	126 +3/-0	Ceramic	4210		181-002-126	4239		181-001-126
50/125, 62.5/125	127 +3/-0	Ceramic	4040	CF-198036-010	181-002-127	4046	CF-198035-010	181-001-127
62.5/125/153	156 +3/-0	Ceramic	4211		181-002-156	4240		181-001-156
62.5/125/155	157 +3/-0	Ceramic	4212		181-002-157	4241		181-001-157
100/140	142 +3/-0	Ceramic	4043	CF-198036-016	181-002-142	4049	CF-198035-016	181-001-142
100/140	145 +3/-0	Ceramic	4044	CF-198036-017	181-002-145	4050	CF-198035-017	181-001-145
100/140/172	173 +3/-0	Ceramic	4087	CF-198036-29A	181-002-173	4088	CF-198035-29A	181-001-173
100/140/172	175 +3/-0	Ceramic	4213	CF-198036-029	181-002-175	4242	CF-198035-029	181-001-175
200/230	236 +4/-0	Ceramic	4214	CF-198036-053	181-002-230	4243	CF-198035-053	181-001-230
200/280	286 +4/-0	Ceramic	4215		181-002-280	4244		181-001-280
400/440	448 +4/-0	Ceramic	4216		181-002-440	4245		181-001-440

TABLE 6101 – III. Unqualified MIL-PRF-29504/04 and MIL-PRF-29504/05 style 2 termini with metal ferrules. 1/

Fiber size (core/cladding) (µm)	Ferrule hole diameter (µm)	M29504/04 pin terminus			M29504/05 socket terminus		
		TICC style 2	CAGE 71468 PIN	CAGE 06324 PIN	TICC style 2	CAGE 71468 PIN	CAGE 06324 PIN
50/125, 62.5/125	127 +3/-0	4231	FOHC-PA1270JP	181-052-127	4260	FOHC-SA1270JP	181-053-127
62.5/125/155	157 +3/-0	4232	FOHC-PA1570JP	181-052-157	4261	FOHC-SA1570JP	181-053-157
100/140	142 +3/-0	4233	FOHC-PA1420JP	181-052-142	4262	FOHC-SA1420JP	181-053-142
100/140/172	175 +3/-0	4234	FOHC-PA1750JP	181-052-175	4263	FOHC-SA1750JP	181-053-175
200/230	236 +4/-0	4235	FOHC-PA2350JP	181-052-236	4264	FOHC-SA2350JP	181-053-236

1/ Once there is a qualified source for supply for MIL-PRF-29504/04 and /05 style 2 termini, only those qualified source(s) will be listed.

Source: https://assist.dla.mil -- Downloaded: 2016-12-31T21:10Z
Check the source to verify that this is the current version before use.

TABLE 6101 – IV. Unqualified MIL-PRF-29504/04 and MIL-PRF-29504/05 style 3 termini. 1/

Fiber size (core/cladding) µm	Ferrule hole diameter µm	M29504/04 PIN terminus		M29504/05 socket terminus	
		TICC style 3	CAGE 53669 Part number (style 3)	TICC style 3	CAGE 53669 Part number (style 3)
SM/125	125 +1/-0	4265	1021027-1250H	4279	1021028-1250H
SM/125	125.5 +1/-0	4266	1021027-1255H	4280	1021028-1255H
SM, 50 & 62.5/125	126 +1/-0	4267	1021027-126SH	4281	1021028-126SH
50/125, 62.5/125	126 +3/-0	4268	1021027-1260H	4282	1021028-1260H
50/125, 62.5/125	127 +3/-0	4269	1021027-1270H	4283	1021028-1270H
62.5/125/153	156 +3/-0	4270	1021027-1560H	4284	1021028-1560H
62.5/125/155	157 +3/-0	4271	1021027-1570H	4285	1021028-1570H
100/140	142 +3/-0	4272	1021027-1420H	4286	1021028-1420H
100/140	145 +3/-0	4273	1021027-1450H	4287	1021028-1450H
100/140/172	173 +3/-0	4274	1021027-1730H	4288	1021028-1730H
100/140/172	175 +3/-0	4275	1021027-1750H	4289	1021028-1750H
200/230	236 +4/-0	4276	1021027-2360H	4290	1021028-2360H
200/280	286 +4/-0	4277	1021027-2860H	4291	1021028-2860H
400/440	448 +4/-0	4278	1021027-2860H	4292	1021028-2860H

1/ Once there is a qualified source for supply for MIL-PRF-29504/04 and MIL-PRF-29504/05 style 3 termini, only those qualified source(s) will be listed.

TABLE 6101 – V. Unqualified MIL-PRF-29504/18 termini. 1/, 2/

Fiber size (core/cladding/coating) µm	Ferrule hole diameter µm	CAGE 0YPM2 Part number COTS equivalent	CAGE 53669 Part number COTS equivalent	CAGE 06324 Part number COTS equivalent	CAGE 71468 Part number COTS equivalent
SM < 9/125	125 +1/-0	M29N0204	1020880-2250H	181-043-1250C	031-9747-012
SM < 9/125	125.5 +1/-0	M20N0205	1020880-2255H	181-043-1255C	031-9747-013
SM < 9/125	126 +1/-0	M29N0206	1020880-2260H	181-043-126SC	031-9747-014
Single Mode 9/125	125 +1/-0	M29N0201	1020880-2251H	181-043-1250C	031-9747-001
Single Mode 9/125	125.5 +1/-0	M29N0202	1020880-2252H	181-043-1255C	031-9747-003
Single Mode 9/125	126 +1/-0	M29N0203	1020880-2261H	181-043-126SC	031-9747-004
50/125, 62.5/125	126 +1/-0	M29N0226	1020880-2263H	181-043-126C	031-9747-005
50/125, 62.5/125	127 +1/-0	M29N0227	1020880-2270H	181-043-127C	031-9747-002
100/140	142 +1/-0	M29N0242	1020880-2420H	181-043-142C	031-9747-006
100/140	145 +1/-0	M29N0245	1020880-2450H	181-043-145C	031-9747-007
62.5/125/155	156 +3/-0	M29N0256	1020880-2560H	181-043-156C	031-9747-008
62.5/125/155	157 +3/-0	M29N0257	1020880-2570H	181-043-157C	031-9747-009
100/140/172	173 +3/-0	M29N0273	1020880-2730H	181-043-173C	031-9747-010
100/140/172	175 +3/-0	M29N0275	1020880-2750H	181-043-175C	031-9747-011

1/ Once there is a qualified source for supply for MIL-PRF-29504/18 terminus, only those qualified source(s) will be listed.
2/ Termini acquired against the COTS equivalent PINs include a crimp sleeve. For termini without the crimp sleeve included, consult the manufacturer for the appropriate part number.

Source: https://assist.dla.mil -- Downloaded: 2016-12-31T21:10Z
Check the source to verify that this is the current version before use.

TABLE 6101 – VI. COTS LC connectors.

Description LC connector/adapter	CAGE code 1YK91 Part number 1/	CAGE code 0PJN9 Part number 2/
LC connector, 125 micron, MM (multimode), simplex jumper connector	108 064 445	6828094-1
LC connector, 125 micron, SM (single mode), simplex jumper connector	109 154 559	6828095-1
LC connector, 125 micron, MM (multimode), duplex jumper connector	108 138 678	6828129-1
LC connector, 125 micron, SM (single mode), duplex jumper connector	108 137 605	6828130-1
LC-to-LC adapter, MM (multimode), duplex adapter, plastic alignment sleeve	108 072 497	
LC-to-LC adapter, SM (single mode), duplex adapter, ceramic alignment sleeve	108 072 489	

1/ Connectors in this column are pull-proof type LC connectors.
2/ Connectors in this column are non-pull-proof type LC connectors.

TABLE 6101-VII. Unqualified MIL-PRF-29504/20 termini

Fiber size (core/cladding/coating) µm	Ferrule hole diameter µm	Cage 0YPM2 Part number COTS equivalent	Cage 53699 Part number COTS equivalent	Cage 06324 Part number COTS equivalent	Cage 71468 Part number COTS equivalent
SM<9/125	125 + 1/-0	M29N0404	10213421-1251CH	181-043K-125C	031-9747-112
SM<9/125	125.5 + 1/-0	M29N0405	10213421-1252CH	181-043K-1255C	031-9747-113
SM<9/125	126 + 1/-0	M29N0406	10213421-1261CH	181-043K-126SC	031-9747-114
Single Mode 9/125	125 + 1/-0	M29N0401	10213421-1250CH	181-043K-1250C	031-9747-101
Single Mode 9/125	125.5 + 1/-0	M29N0402	10213421-1255CH	181-043K-1255C	031-9747-103
Single Mode 9/125	126 + 1/-0	M29N0403	10213421-1260CH	181-043K-126SC	031-9747-104
50/125, 62.5/125	126 + 1/-0	M29N0426	10213421-1262CH	181-043K-126C	031-9747-105
50/125, 62.5/125	127 + 1/-0	M29N0427	10213421-1270CH	181-043K-127C	031-9747-102
100/140	142 +1/-0	M29N0442	10213421-1420CH	181-043K-142C	031-9747-106
100/140	145 +1/-0	M29N0445	10213421-1450CH	181-043K-145C	031-9747-107
62.5/125/155	156 + 3/-0	M29N0456	10213421-1560CH	181-043K-156C	031-9747-108
62.5/125/155	157 + 3/-0	M29N0457	10213421-1570CH	181-043K-157C	031-9747-109
100/140/172	173 + 3/-0	M29N0473	10213421-1730CH	181-043K-173C	031-9747-110
100/140/172	175 + 3/-0	M29N0475	10213421-1750CH	181-043K-175C	031-9747-111

1/ Once there is a qualified source for supply for MIL-PRF-29504/20 terminus, only those qualified source(s) will be listed.
2/ Termini procured against the COTS equivalent part numbers include a crimp sleeve. For termini without the crimp sleeve included, consult the manufacturer for the appropriate part number.

Source: https://assist.dla.mil -- Downloaded: 2016-12-31T21:10Z
Check the source to verify that this is the current version before use.

TABLE 6101-VIII. COTS SC Connectors.

Description SC connector/adapter3/	CAGE code 0PJN9 Part number 1/	CAGE code 0PJN9 Part number 2/
SC connector, 125 micron, MM (multimode), simplex jumper connector	504931-1	62828099-1
SC connector, 125 micron, SM (single mode), simplex jumper connector	504934-2	6828100-1
SC connector, 125 micron, MM (multimode), duplex jumper connector	504936-2	1828574-1
SC connector, 125 micron, SM (single mode), duplex jumper connector	504928-1	1828573-1
SC - to - SC adapter, MM, simplex adapter, plastic alignment sleeve	1-502632-0	
SC - to -SC adapter, SM, duplex adapter, ceramic alignment sleeve	1-502776-0	

1/ Connectors in this column are pull-proof type SC connectors.
2/ Connectors in this column are non pull-proof type SC connectors.
3/ For placement on cable with a 1.6 to 2.0 mm outer jacket diameter.

6. Notes.

6.1 Intended use. On these platforms, the fiber optic cable assemblies intended to be inspected include (1) cable harnesses, (2) equipment (electronic module/package) such as a(n) ATR, LRC, LRM or LRU or WRA with internal fiber optics, (3) circuit card modules and assemblies with internal fiber optics, (4) fiber optic test jumpers, and (5) other miscellaneous cabling.

REQUIREMENT 6101

Source: https://assist.dla.mil -- Downloaded: 2016-12-31T21:10Z
Check the source to verify that this is the current version before use.

SINGLE FIBER CABLE

1. Purpose. This requirement refines or bounds (constrains) the selection of the fiber optic part referred to as the cable. Specifically, the type of cable is one that contains one optical fiber per cable. This type cabling may be referred to as single fiber cable, single fiber cabling, or simplex cable. This requirement is intended for developmental, prototype, production, rework, and modification programs on military platform fiber optic cable assemblies.

2. Applicable documents.

2.1 General. The documents listed in this section are specified in sections 3, 4, and 5 of this standard practice. This section does not include documents cited in other sections of this standard practice or recommended for additional information or as examples. While every effort has been made to ensure the completeness of this list, document users are cautioned that they must meet all specified requirements of documents cited in sections 3, 4, and 5 of this standard practice, whether or not they are listed.

2.2 Government documents.

2.2.1 Specifications, standards, and handbooks. The following specifications, standards, and handbooks form a part of this document to the extent specified herein. Unless otherwise specified, the issues of these documents are those cited in the solicitation or contract.

DEPARTMENT OF DEFENSE SPECIFICATIONS

MIL-DTL-38999 -	Connectors, Electrical, Circular, Miniature, High Density, Quick Disconnect, (Bayonet Threaded and Breech Coupling), General Specification for.
MIL-PRF-85045-	Cables, Fiber Optics (Metric), General Specification for.

(Copies of these documents are available online at http://quicksearch.dla.mil or from the Standardization Document Order Desk, 700 Robbins Avenue, Building 4D, Philadelphia, PA 19111-5094.)

2.3 Other Government documents, drawings, and publications. The following other Government documents, drawings, and publications form a part of this standard practice to the extent specified herein. Unless otherwise specified, the issues are these documents are those cited in the solicitation or contract.

NAVAIR 01-1A-505-4/ T.O. 1-1A-14-4/TM 1-1500-232-24-4-	Installation and Testing Practices, Aircraft Fiber Optic Cabling.

(A copy of this document is available online at: https://mynatec.navair.navy.mil. NATEC has three difference processes to obtain the manual, depending on if you are Government personnel (military and civilians), Contractors with a Government contract, or everyone else. If unable to access this Web Site or require further assistance, contact (1) NATEC Customer Service: 619.545.1888, (2) NATEC Website Status Hotline: 619.545.1706, or (3) NATEC Customer Service E-mail: nani_customerservice@navy.mil.)

2.4 Order of precedence. Unless otherwise noted herein or in the contract, in the event of a conflict between the text of this document and the references cited herein, the text of this document takes precedence. Nothing in this document, however, supersedes applicable laws and regulations unless a specific exemption has been obtained.

3. Definitions.

3.1 Cable assembly (fiber optic). One or more segments of fiber optic cable with connectors on the end of each segment.

3.2 Cable bundle, fiber optic. Single fiber cables grouped together and secured by lacing tape. The cable bundle can be placed in convoluted tubing, used in various protected harness configurations or used as is in an open cable harness configuration.

Source: https://assist.dla.mil -- Downloaded: 2016-12-31T21:10Z
Check the source to verify that this is the current version before use.

3.3 Cable, captive strength member. A component in the cable that increases the cable's strength, protects the optical fibers from strain and, when stranded in opposing lays, assists to minimize micro bending. When terminating a connector/terminus onto the end of a fiber optic cable, the captive strength member is secured to the connector/terminus. The intent is for a force caused by a pull on the cable to be placed on the captive strength member and not on the fiber inside the connector/terminus.

3.4 Cable, fiber optic. A cable that contains optical fibers. The cable may be of a tight buffer or a loose tube design.

3.5 Cabling, fiber optic. Fiber optic cabling is a term used to include single fiber cable, multiple fiber cable, fiber optic cable bundles and fiber optic cable harnesses. The (optical) fiber is the optical conduit or waveguide transmission media, whereas metallic conductor (wire) is used in an electrical cable. Cable structure is added to make the fibers easier to handle and maintain. The fiber is a thin piece of glass (with a diameter usually around 125 micrometers) that contains and transports the light signals.

3.6 Cable harness, fiber optic. A cable assembly that consists of fiber optic cabling with or without cables run to different breakouts (branches) and with fiber optic connectors at the end of each cable run or segment. The cabling may contain a protective cover (protected cable harness) or remain exposed (open cable harness). Types of protective coverings include convoluted tubing (preferred for a fiber optic application) and braid. The connector is usually a multiple termini connector plug/receptacle and configured with connector accessories such as a backshell for cable strain relief, a backshell for affixing the protective covering to the connector or an EMI retention nut. The type of protective covering used must not be one that stresses the cable.

3.7 Cable harness, multiple segment (fiber optic). Two or more single segment cable harnesses mated together at the fiber optic connectors.

3.8 Cable harness, single segment (fiber optic). Single segment harnesses consist of cabling with connectors on each end. Different configurations for this cable harness may be multiple termini connector cable harnesses (such as plug−to−plug or plug−to−receptacle configurations) and multiple termini plug/receptacle to single fiber connector harnesses.

3.9 Cable, loose tube. A fiber optic cable design is one configured with one or more optical fibers are fitted loosely within a tube, giving the optical fibers freedom to move. This mobility and isolation from the tube minimizes the effects of external forces on the performance of the link. The isolation allows cable expansion and contraction with temperature independent of the optical fibers.

3.10 Cable, simplex. A cable containing a single fiber and may be configured as either tight buffer or loose tube construction.

3.11 Cable, tight buffer. A fiber optic cable design is one configured with an additional protective coding (additional buffer layer) is applied directly over a coated (buffered) fiber. Buffer material helps preserve the fiber's inherent strength and provides increased mechanical protection. A tight buffered cable allows cable placement in tighter bends, more roughed handling (such as better crush and impact resistance).

4. Requirements. Fiber optic cable shall be standardized for commonality compliance across platforms. Commonality compliance is that which bounds or restricts the parts to those recognized by the Joint Fiber Optic Working Group (JFOWG), cited in the General Series Technical Manual for Fiber Optic Cabling (NAVAIR 01-1A-505-1/T.O. 1-1A-14/TM 1-1500-232-24-4) and, as a result, cited in this Standard Practice.

5. Implementation. Unless otherwise specified by the applicable Platform Office, fiber optic cables used shall be restricted to those in table 6102 – I. These cables include those that are a part of a fiber optic cable harness, those to transition to end user equipment interfacing with the cable harness, and those on patch cords.

REQUIREMENT 6102

Source: https://assist.dla.mil -- Downloaded: 2016-12-31T21:10Z
Check the source to verify that this is the current version before use.

TABLE 6102 – I. Cable, high performance commercial, standard performance QPL.

Item	Description 1/, 2/, 3/	Quantity	CAGE code	Part number
6102AA	Cable, high performance (-55 to 165 °C), single fiber (simplex), tight buffer, with 100/140/172 micron fiber		OFS	BC05082
6102AB	Cable, high performance (-55 to 165 °C), single fiber (simplex), tight buffer, with 62.5/125 micron fiber		OFS	C10028
6102AC	Cable, high performance (-55 to 165 °C), single fiber (simplex), tight buffer, with 50/125 micron fiber		OFS	C10027
6102AD	Cable, high performance (-55 to 165 °C), single fiber (simplex), tight buffer, with 9/125 micron fiber		OFS	C14447
6102AE	Cable, high performance (-55 to 165 °C), single fiber (simplex), tight buffer, with 5.8/125 micron fiber		OFS	C10026
6102BA	Cable, high performance (-65 to 200 °C), single fiber (simplex), loose tube, with 100/140/172 micron fiber		General Cable	OC-1260
6102BB	Cable, high performance (-65 to 200 °C), single fiber (simplex), loose tube, with 62.5/125/155 micron fiber		General Cable	OC-1698
6102CA	Cable, standard performance (-28 to 65 °C), single fiber (simplex), tight buffer, with 62.5/125 micron fiber, qualified to MIL-PRF-85045		See QPL-85045	M85045/16-01
6102CB	Cable, standard performance (-28 to 65 °C), single fiber (simplex), tight buffer, with 8.5-10/125 micron fiber, qualified to MIL-PRF-85045		See QPL-85045	M85045/16-02

1/ Tight buffer cable preferred over loose tube cable.
2/ Cable OD increased with Raychem Part No. VTW-3/16 to penetrate grommet seal for MIL-DTL-38999 connectors.
3/ Cable OD: General Cable = 2.11 ± .05 mm (.08 inch ± .002 inch), OFS = 1.8 ± .1 mm (.07 inch ± (.004 inch), M85045/16 = 2.0 ± .2 mm (.078 inch ± .008 inch).

6. Notes.

6.1 Intended use. On these platforms, the fiber optic cable assemblies intended to be inspected include (1) cable harnesses, (2) equipment (electronic module/package) such as a(n) ATR, LRC, LRM, LRU or WRA with internal fiber optics, (3) circuit card modules and assemblies with internal fiber optics, (4) fiber optic test jumpers, and (5) other miscellaneous cabling.

Source: https://assist.dla.mil -- Downloaded: 2016-12-31T21:10Z
Check the source to verify that this is the current version before use.

EPOXIES, ADHESIVES AND GELS

1. Purpose. This requirement refines or bounds (constrains) the selection of the fiber optic part referred to as the epoxies and adhesives. Specifically, the type of epoxy used is a two part, heat cured epoxy used to secure a fiber optic terminus or a single ferrule connector onto the end of a fiber optic cable. Adhesives include those that are UV curable. Gels are those used as index matching materials. This requirement is intended for developmental, prototype, production, rework, and modification programs on military platform fiber optic cable assemblies.

2. Applicable documents.

2.1 General. The documents listed in this section are specified in sections 3, 4, and 5 of this standard practice. This section does not include documents cited in other sections of this standard practice or recommended for additional information or as examples. While every effort has been made to ensure the completeness of this list, document users are cautioned that they must meet all specified requirements of documents cited in sections 3, 4, and 5 of this standard practice, whether or not they are listed.

2.2 Other Government documents, drawings, and publications. The following other Government documents, drawings, and publications form a part of this standard practice to the extent specified herein. Unless otherwise specified, the issues are these documents are those cited in the solicitation or contract.

NAVAIR 01-1A-505-4/ T.O. 1-1A-14-4/TM1-1500-232-24-4-	Installation and Testing Practices, Aircraft Fiber Optic Cabling

(A copy of this document is available online at: https://mynatec.navair.navy.mil. NATEC has three difference processes to obtain the manual, depending on if you are Government personnel (military and civilians), Contractors with a Government contract, or everyone else. If unable to access this Web Site or require further assistance, contact (1) NATEC Customer Service: 619.545.1888, (2) NATEC Website Status Hotline: 619.545.1706, or (3) NATEC Customer Service E-mail: nani_customerservice@navy.mil.)

2.3 Order of precedence. Unless otherwise noted herein or in the contract, in the event of a conflict between the text of this document and the references cited herein, the text of this document takes precedence. Nothing in this document, however, supersedes applicable laws and regulations unless a specific exemption has been obtained.

3. Definitions.

3.1 Epoxy. Epoxy (polyepoxide) is a thermosetting polymer solid adhesive that is formed from reaction of an epoxide "resin" with polyamine "hardener". The epoxy is used for bonding optical fibers to metal and ceramic fiber optic connector and terminus ferrules.

3.2 Index-matching material. Transparent material, that is, light-transmitting material, with a refractive index such that when used in intimate contact with other transparent materials, radiant power loss is reduced at interfaces by reducing reflection,reducing transmission loss, avoiding scattering, and reducing dispersion. For example, a liquid or cement whose refractive index is nearly equal to that of the core of an optical fiber, used to reduce Fresnel reflections from the fiber end-face.

3.3 Ultraviolet. Pertaining to the region of the electromagnetic spectrum in which wavelengths are shorter than those of the visible spectrum, but longer than x-rays. The ultraviolet region extends from about 1 nm (nanometer), which is the beginning of the optical spectrum, to about 400 nm, that is, the beginning of the visible region, or 0.001 to 0.4 µm (micron). Because the frequency of ultraviolet radiation is higher than that of the visible region, the rays, that is, the photons, can kill some living organisms, such as some germs and bacteria, and can have a damaging effect on human cells if exposure time and irradiance is sufficiently high. Because of the higher frequencies, attenuation rates in glass are higher for the shorter-than-visible ultraviolet wavelengths and, because of the lower frequencies, attenuation rates are lower for the infrared, hence the interest in the use of infrared in long-haul optical fiber communication systems.

3.4 UV. Ultraviolet.

3.5 UV adhesive. This is a one part adhesive cured using UV light. UV adhesives can cure in seconds to minutes depending upon UV dose, UV wavelength and curing duration used. The UV adhesives are usually acrylic based.

Source: https://assist.dla.mil -- Downloaded: 2016-12-31T21:10Z
Check the source to verify that this is the current version before use.

4. Requirements. Fiber optic epoxies, index matching materials (gels) and UV adhesives shall be standardized for commonality compliance across platforms. Commonality compliance is that which bounds or restricts the parts to those recognized by the Joint Fiber Optic Working Group (JFOWG), cited in the General Series Technical Manual for Fiber Optic Cabling (NAVAIR 01-1A-505-1/T.O. 1-1A-14/TM 1-1500-232-24-4) and, as a result, cited in this Standard Practice.

5. Implementation. Unless otherwise specified by the applicable Platform Office, epoxies, index matching materials (gels) and UV adhesives used shall be restricted to those in table 6103 - I through table 6103 - III.

TABLE 6103 – I. Epoxy.

Item	Description 1/	Quantity	CAGE code	Part number
6103AA	Epoxy, two-part, high performance (-55 to 165 °C), temperature range 2		33246	EPO-TEK 353ND

1/ Use cure schedule specified in WP 010 02 of NAVAIR 01-1A-505-4/T.O. 1-1A-14-4/TM 1-1500-323-24-4; Installation and Testing Practices, Aircraft Fiber Optic Cabling.

TABLE 6103 – II. Index matching material.

Item	Description 1/	Quantity	CAGE code	Part number
6103BA	Index matching gel, high performance (-55 to 165 °C)		98354	Nye Optical OC-431A-LVP

1/ Apply for each specific mechanical splice as specified in applicable Work Package (WP) of NAVAIR 01-1A-505-4/T.O. 1-1A- 14-4/TM 1-1500-323-24-4; Installation and Testing Practices Aircraft Fiber Optic Cabling.

TABLE 6103 – III. UV adhesive.

Item	Description 1/	Quantity	CAGE code	Part number
6103CA	UV adhesive		TBD	TBD

1/ Use cure schedule for each specific mechanical splice as specified in applicable Work Package (WP) of NAVAIR 01-1A-505-4/T.O. 1-1A-14-4/TM 1-1500-323-24-4; Installation and Testing Practices Aircraft Fiber Optic Cabling.

6. Notes.

6.1 Intended use. On these platforms, the fiber optic cable assemblies intended to be inspected include (1) cable harnesses, (2) equipment (electronic module/package) such as a(n) ATR, LRC, LRM, LRU or WRA with internal fiber optics, (3) circuit card modules and assemblies with internal fiber optics, (4) fiber optic test jumpers, and (5) other miscellaneous cabling.

REQUIREMENT 6103

Source: https://assist.dla.mil -- Downloaded: 2016-12-31T21:10Z
Check the source to verify that this is the current version before use.

CONVOLUTED TUBING

1. Purpose. This requirement refines or bounds (constrains) the selection of the fiber optic part referred to as the convoluted tubing. Specifically, two materials are specified for convoluted tubing. Footnotes in the table provide guidance for the selection of the proper material for the intended application. This requirement is intended for developmental, prototype, production, rework, and modification programs on military platform fiber optic cable assemblies.

2. Applicable documents.

2.1 General. The documents listed in this section are specified in sections 3, 4, and 5 of this standard practice. This section does not include documents cited in other sections of this standard practice or recommended for additional information or as examples. While every effort has been made to ensure the completeness of this list, document users are cautioned that they must meet all specified requirements of documents cited in sections 3, 4, and 5 of this standard practice, whether or not they are listed.

2.2 Other Government documents, drawings, and publications. The following other Government documents, drawings, and publications form a part of this standard practice to the extent specified herein. Unless otherwise specified, the issues are these documents are those cited in the solicitation or contract.

NAVAIR 01-1A-505-4/ T.O. 1-1A-14-4/TM1-1500-232-24-4-	Installation and Testing Practices, Aircraft Fiber Optic Cabling.

(A copy of this document is available online at: https://mynatec.navair.navy.mil. NATEC has three difference processes to obtain the manual, depending on if you are Government personnel (military and civilians), Contractors with a Government contract, or everyone else. If unable to access this Web Site or require further assistance, contact (1) NATEC Customer Service: 619.545.1888, (2) NATEC Website Status Hotline: 619.545.1706, or (3) NATEC Customer Service E-mail: nani_customerservice@navy.mil.) (

2.3 Non-Government publications. The following documents form a part of this document to the extent specified herein. Unless otherwise specified, the issues of these documents are cited in the solicitation or contract.

SAE INTERNATIONAL

SAE AS81914/4	-	Tubing, Plastic, Extra Flexible, Convoluted, Helical, Fluorinated Ethylene Propylene (FEP), Close Convolution

(A copy of this document is available online at www.sae.org or by writing to SAE World Headquarters, 400 Commonwealth Drive, Warrendale, PA 15096-0001.)

2.4 Order of precedence. Unless otherwise noted herein or in the contract, in the event of a conflict between the text of this document and the references cited herein, the text of this document takes precedence. Nothing in this document, however, supersedes applicable laws and regulations unless a specific exemption has been obtained.

3. Definitions.

3.1 Convoluted tubing, fiber optic. A plastic hollow, elongated, cylindrical structure or tube extruded with rigid supports used in fiber optic applications as one option for the cable harness protective cover. This plastic tube is relatively flexible, constructed with helical convolutions for rigidity and fabricated from materials and using processes to meet the specified application environmental requirements.

4. Requirements. Convoluted tubing for fiber optic applications shall be standardized for commonality compliance across platforms. Commonality compliance is that in which bounds or restricts the parts to those recognized by the Joint Fiber Optic Working Group (JFOWG), cited in the General Series Technical Manual for Fiber Optic Cabling (NAVAIR 01-1A-505-1/T.O. 1-1A-14/TM 1-1500-232-24-4) and, as a result, cited in this Standard Practice.

Source: https://assist.dla.mil -- Downloaded: 2016-12-31T21:10Z
Check the source to verify that this is the current version before use.

5. Implementation. Unless otherwise specified by the applicable Platform Office, convoluted tubing for use in fiber optic applications shall be restricted to those in table 6104 - I. These offerings of convoluted tubing include those that are a part of a fiber optic cable harness, and those to transition to end user equipment interfacing with the cable harness.

TABLE 6104 – I. Convoluted tubing, FEP and PEEK materials.

Item	Description	Quantity	CAGE code	Part number
6104AA	Convoluted tubing, SAE AS81914/4-1201 plastic, extra flexible, FEP, class 2 (thin wall thk) , max ID .188	N/A		NSN 5975-01-343-1294
6104AB	Convoluted tubing, SAE AS81914/4-1202 plastic, extra flexible, FEP, class 2 (thin wall thk) , max ID .281, 5.49 m length	N/A		NSN 9330-01-111-1754
6104AC	Convoluted tubing, SAE AS81914/4-1203 plastic, extra flexible, FEP, class 2 (thin wall thk) , max ID .312	N/A		NSN 1560-01-477-5713
6104AD	Convoluted tubing, SAE AS81914/4-1204 plastic, extra flexible, FEP, class 2 (thin wall thk) , max ID .375	N/A		NSN 9330-01-104-1128
6104AE	Convoluted tubing, SAE AS81914/4-1205 plastic, extra flexible, FEP, class 2 (thin wall thk) , max ID .437	N/A	06324	120-100-2-2-14-B-F, specify length in feet
6104AF	Convoluted tubing, SAE AS81914/4-1206 plastic, extra flexible, FEP, class 2 (thin wall thk) , max ID .500	N/A		NSN 9330-01-035-8932
6104AG	Convoluted tubing, SAE AS81914/4-1207 plastic, extra flexible, FEP, class 2 (thin wall thk) , max ID .625	N/A		NSN 4720-01-495-0318
6104AH	Convoluted tubing, SAE AS81914/4-1208 plastic, extra flexible, FEP, class 2 (thin wall thk) , max ID .75	N/A		NSN 9330-01-035-8933
6104AI	Convoluted tubing, SAE AS81914/4-1209 plastic, extra flexible, FEP, class 2 (thin wall thk) , max ID .875	N/A		NSN 5975-01-229-6341
6104AJ	Convoluted tubing, SAE AS81914/4-1210 plastic, extra flexible, FEP, class 2 (thin wall thk) , max ID 1.00	N/A		NSN 5975-01-216-3401
6104AK	Convoluted tubing, SAE AS81914/4-1211 plastic, extra flexible, FEP, class 2 (thin wall thk) , max ID 1.125	N/A		
6104AL	Convoluted tubing, SAE AS81914/4-1212 plastic, extra flexible, FEP, class 2 (thin wall thk) , max ID 1.25, 5.49 m length	N/A		NSN 9330-01-348-9026
6104AM	Convoluted tubing, SAE AS81914/4-1213 plastic, extra flexible, FEP, class 2 (thin wall thk) , max ID 1.50	N/A		NSN 4720-01-495-0334
6104AN	Convoluted tubing, SAE AS81914/4-1214 plastic, extra flexible, FEP, class 2 (thin wall thk) , max ID 1.75	N/A	06324	120-100-2-2-56-B-F, specify length in feet
6104AO	Convoluted tubing, SAE AS81914/4-1215 plastic, extra flexible, FEP, class 2 (thin wall thk) , max ID 2.00	N/A	06324	120-100-2-2-64-B-F, specify length in feet
6104CA	Convoluted tubing, PEEK, SAE AS81914/11	N/A	06324	120-108-XX Series
			5/	200153-20XX Series

1/ NAVAIR 01-1A-505-4/T.O. 1-1A-14-4/TM 1-1500-323-24-4; Installation and Testing Practices Aircraft Fiber Optic Cabling.

2/ FEP Convoluted tubing. Plastic convoluted tubing made from FEP (fluorinated ethylene propylene) is the preferred material due to the materials flexibility, high thermal stability and cost. Thin wall tubing versus standard wall tubing is specified for aircraft applications. Since both have close convolutions and similar crush resistance, weight advantage favors use of thin wall tubing.

3/ PEEK Convoluted tubing. For applications in which convoluted tubing is to be routed through personnel spaces and safety is the primary factor, the low smoke, zero halogen PEEK (polyether-ether-ketone) is specified. This material is more rigid, and as a result, more likely to have tube collapse/kinking occur during routing in tight spaces. No requirement for low temperature flexibility is addressed for PEEK. PEEK convoluted tubing usually breaks at less than 1,000 cycles at room temperature when flexed at or close to the minimum bend diameter. PEEK is not an appropriate material for dynamic applications where flexing occurs close to the minimum bend diameter and never recommend where the material will be continually flexed. PEEK material can be used in high vibration locations since vibration amplitudes do not come close to the minimum bend diameter. In applications such as at access panels where the convoluted tubing can be flexed in a very tight radius over several hundred times, a section of FEP convoluted tubing is recommended over that of PEEK.

4/ Convoluted tubing with pre-drilled drainage holes are preferred. If supplied, recommend holes in tubing be staggered along the length and at least every 60 degrees around the circumference. Part numbers provided in the table are for convoluted tubing that do not include pre-drilled drainage holes.

5/ Icore Electro-Plastics, 180 N. Wolfe Road, Sunnyvale CA 94086.

Source: https://assist.dla.mil -- Downloaded: 2016-12-31T21:10Z
Check the source to verify that this is the current version before use.

6. Notes.

6.1 Intended use. On these platforms, the fiber optic cable assemblies intended to be inspected include (1) cable harnesses, (2) equipment (electronic module/package) such as a(n) ATR, LRC, LRM, LRU or WRA with internal fiber optics, (3) circuit card modules and assemblies with internal fiber optics, (4) fiber optic test jumpers, and (5) other miscellaneous cabling.

Source: https://assist.dla.mil -- Downloaded: 2016-12-31T21:10Z
Check the source to verify that this is the current version before use.

BACKSHELL, SOLID

1. Purpose. This requirement refines or bounds (constrains) the selection of the fiber optic part referred to as the backshell. Specifically, the backshell is placed on the cable entry end of the multiple termini connector. The backshell is used for mechanical and environmental protection and to interface the protective cover or cable strain relief of the cable harness with the connector (see 3.1). A solid backshell is one with a one-piece, solid backshell body. This requirement is intended for developmental, prototype, production, rework and modification programs on military platform fiber optic cable assemblies (see 6.2).

2. Applicable documents.

2.1 General. The documents listed in this section are specified in sections 3, 4, and 5 of this standard practice. This section does not include documents cited in other sections of this standard practice or recommended for additional information or as examples. While every effort has been made to ensure the completeness of this list, document users are cautioned that they must meet all specified requirements of documents cited in sections 3, 4, and 5 of this standard practice, whether or not they are listed.

2.2 Government documents.

2.2.1 Specifications, standards, and handbooks. The following specifications, standards, and handbooks form a part of this document to the extent specified herein. Unless otherwise specified, the issues of these documents are those cited in the solicitation or contract.

DEPARTMENT OF DEFENSE SPECIFICATIONS

MIL-DTL-38999	-	Connectors, Electrical, Circular, Miniature, High Density, Quick Disconnect, (Bayonet Threaded and Breech Coupling), General Specification for.
MIL-PRF-64266	-	Connectors, Fiber Optic, Circular and Rectangular, Plug and Receptacle Style, Multiple Removable Genderless Termini, Environment Resisting General Specification for

(Copies of these documents are available online at http://quicksearch.dla.mil or from the Standardization Document Order Desk, 700 Robbins Avenue, Building 4D, Philadelphia, PA 19111-5094.)

2.3 Other Government documents, drawings, and publications. The following other Government documents, drawings, and publications form a part of this standard practice to the extent specified herein. Unless otherwise specified, the issues are these documents are those cited in the solicitation or contract.

NAVAIR 01-1A-505-4/ T.O. 1-1A-14-4/TM1-1500-232-24-4-	Installation and Testing Practices Aircraft Fiber Optic Cabling.

(A copy of this document is available online at: https://mynatec.navair.navy.mil. NATEC has three different processes to obtain the manual, depending on if you are Government personnel (military and civilians), Contractors with a Government contract, or everyone else. If unable to access this Web Site or require further assistance, contact (1) NATEC Customer Service: 619.545.1888, (2) NATEC Website Status Hotline: 619.545.1706, or (3) NATEC Customer Service E-mail: nani_customerservice@navy.mil.)

2.4 Order of precedence. Unless otherwise noted herein or in the contract, in the event of a conflict between the text of this document and the references cited herein, the text of this document takes precedence. Nothing in this document, however, supersedes applicable laws and regulations unless a specific exemption has been obtained.

Source: https://assist.dla.mil -- Downloaded: 2016-12-31T21:10Z
Check the source to verify that this is the current version before use.

3. Definitions.

3.1 Backshell, fiber optic. The shroud or protective structure placed on the cable entry end of the multiple termini connector that provides mechanical protection of the fiber optic cable at the exit (cable entry end) of the connector. For protective cable harnesses with single fiber cabling, the backshell is used to interface the protective covering or cable strain relief of the cable harness with the connector. The backshell is also used to provide a degree of environmental sealing, depending upon the specific design.

3.2 Backshell, solid, fiber optic. A solid backshell is one with a one-piece, solid shell or body.

3.3 Backshell, split, fiber optic. A split backshell is one with two or more pieces that fit together and form a shell over the cabling. The multiple pieces can be in the form of split shell halves or other type penetrations within the shell.

3.4 Cable harness, multiple segment (fiber optic). Two or more single segment cable harnesses mated together at the fiber optic connectors.

3.5 Cable harness, single segment (fiber optic). Single segment harnesses consist of cabling with connectors on each end. Different configurations for this cable harness may be multiple termini connector cable harnesses (such as plug−to−plug or plug−to−receptacle configurations) and multiple termini plug/receptacle to single segment connector harnesses.

3.6 Protective cable harness. A cable harness in which a structure or material is placed over the cabling component as opposed to having exposed cabling (open cable harness). Types of protective coverings include convoluted tubing (preferred for a fiber optic application) and braid (such as cable wrap).

4. Requirements. Fiber optic backshell shall be standardized for commonality compliance across platforms. Commonality compliance is that which bounds or restricts the parts to those recognized by the Joint Fiber Optic Working Group (JFOWG), cited in the General Series Technical Manual for Fiber Optic Cabling (NAVAIR 01-1A-505-1/T.O. 1-1A-14/TM 1-1500-232-24-4) and, as a result, cited in this Standard Practice.

5. Implementation. Unless otherwise specified by the applicable Platform Office, fiber optic backshells used shall be restricted to those in table 6105 – I and table 6105 – II. Note that part numbers in these tables must be varied for parameter changes such as for cable entry interface (banding adapter or no cable entry interface instead of that for convoluted tubing). These backshells includes those that are a part of a fiber optic cable harness.

Source: https://assist.dla.mil -- Downloaded: 2016-12-31T21:10Z
Check the source to verify that this is the current version before use.

TABLE 6105 – I. Backshell, solid, single fiber cables, MIL-PRF-64266 connector, convoluted tubing cable entry interface, environmental resisting. 1/

Item	Description	Quantity	CAGE code	Part number 2/-6/
6105AA	Backshell, straight, aluminum with cad plating, shell size 11, for 02 cavity insert, tube size 9.52 mm (.375 inch), tube = FEP		06324	377NS104NF112-12T
6105AB	Backshell, 45 degree, aluminum with cad plating, shell size 11, for 02 cavity insert, tube size 9.52 mm (.375 inch), tube = FEP		06324	377NM104NF112-12T
6105AC	Backshell, 90 degree, aluminum with cad plating, shell size 11, for 02 cavity insert, tube size 9.52 mm (.375 inch), tube = FEP		06324	377NN104NF112-12T
6105AD	Backshell, straight, aluminum with cad plating, shell size 11, for 04 cavity insert, tube size 11.13 mm (.438 inch), tube = FEP		06324	377NS104NF114-14T
6105AE	Backshell, 45 degree, aluminum with cad plating, shell size 11, for 04 cavity insert, tube size 11.13 mm (.438 inch), tube = FEP		06324	377NM104NF114-14T
6105AF	Backshell, 90 degree, aluminum with cad plating, shell size 11, for 04 cavity insert, tube size 11.13 mm (.438 inch), tube = FEP		06324	377NN104NF114-14T
6105AG	Backshell, straight, aluminum with cad plating, shell size 13, for 06 cavity insert, tube size 12.70 mm (.500 inch), tube = FEP		06324	377NS104NF136-16T
6105AH	Backshell, 45 degree, aluminum with cad plating, shell size 13, for 06 cavity insert, tube size 12.70 mm (.500 inch), tube = FEP		06324	377NM104NF136-16T
6105AI	Backshell, 90 degree, aluminum with cad plating, shell size 13, for 06 cavity insert, tube size 12.70 mm (.500 inch), tube = FEP		06324	377NN104NF136-16T
6105AJ	Backshell, straight, aluminum with cad plating, shell size 15, for 08 cavity insert, tube size 19.05 mm (.750 inch), tube = FEP		06324	377NS104NF158-24T
6105AK	Backshell, 45 degree, aluminum with cad plating, shell size 15, for 08 cavity insert, tube size 19.05 mm (.750 inch), tube = FEP		06324	377NM104NF158-24T
6105AL	Backshell, 90 degree, aluminum with cad plating, shell size 15, for 08 cavity insert, tube size 19.05 mm (.750 inch), tube = FEP		06324	377NN104NF158-24T
6105AM	Backshell, straight, aluminum with cad plating, shell size 15, for 10 cavity insert, tube size 19.05 mm (.750 inch), tube = FEP		06324	377NS104NF1510-24T
6105AN	Backshell, 45 degree, aluminum with cad plating, shell size 15, for 10 cavity insert, tube size 19.05 mm (.750 inch), tube = FEP		06324	377NM104NF1510-24T
6105AO	Backshell, 90 degree, aluminum with cad plating, shell size 15, for 10 cavity insert, tube size 19.05 (.750 inch), tube = FEP		06324	377NN104NF1510-24T
6105AP	Backshell, straight, aluminum with cad plating, shell size 23, for 36 cavity insert, tube size 31.75 mm (1.25 inch), tube = FEP		06324	377NS104NF2336-40T
6105AQ	Backshell, 45 degree, aluminum with cad plating, shell size 23, for 36 cavity insert, tube size 31.75 mm (1.25 inch), tube = FEP		06324	377NM104NF2336-40T
6105AR	Backshell, 90 degree, aluminum with cad plating, shell size 23, for 36 cavity insert, tube size 31.75 mm (1.25 inch), tube = FEP		06324	377NN104NF2336-40T

1/ Planned to place components and connector assembly in WP 011 of NAVAIR 01-1A-505-4/T.O. 1-1A-14-4/TM 1-1500-323-24-4, Installation and Testing Practices Aircraft Fiber Optic Cabling.

2/ Change "T" in last digit of part number to "K" for cable entry interface with PEEK convoluted tubing instead of FEP convoluted tubing.

3/ Change "T" in last digit of part number to "A" for cable entry interface with banding adapter instead of for convoluted tubing. Cable entry diameter is same as that specified for convoluted tubing.

4/ Change "T" in last digit of part number to "N" for no cable entry interface.

5/ Change "NF" in 9th and 10th digits of PIN to "XW" for backshell made from composite instead of aluminum.

6/ Change "NF" in 9th and 10th digits of PIN to "Z1" for backshell made from stainless steel instead of aluminum.

Source: https://assist.dla.mil -- Downloaded: 2016-12-31T21:10Z
Check the source to verify that this is the current version before use.

TABLE 6105 – II. Backshell, solid, single fiber cables, MIL-DTL-38999 connector, convoluted tubing cable entry interface, environmental resisting. 1/

Item	Description	Quantity	CAGE code	Part number 2/ - 6/
6105CA	Backshell, straight, aluminum with cad plating, shell size 11, for 02 cavity insert, tube size 9.52 mm (.375 inch), tube = FEP		06324	377HS104NF112T
6105CB	Backshell, 45 degree, aluminum with cad plating, shell size 11, for 02 cavity insert, tube size 9.52 mm (.375 inch), tube = FEP		06324	377HM104NF1112T
6105CC	Backshell, 90 degree, aluminum with cad plating, shell size 11, for 02 cavity insert, tube size 9.52 mm (.375 inch), tube = FEP		06324	377HN104NF1112T
6105CD	Backshell, straight, aluminum with cad plating, shell size 13, for 04 cavity insert, tube size 11.13 mm (.438 inch), tube = FEP		06324	377HS104NF1314T
6105CE	Backshell, 45 degree, aluminum with cad plating, shell size 13, for 04 cavity insert, tube size 11.13 mm (.438 inch), tube = FEP		06324	377HM104NF1314T
6105CF	Backshell, 90 degree, aluminum with cad plating, shell size 13, for 04 cavity insert, tube size 11.13 mm (.438 inch), tube = FEP		06324	377HN104NF1314T
6105CG	Backshell, straight, aluminum with cad plating, shell size 15, for 05 cavity insert, tube size 12.70 mm (.500 inch), tube = FEP		06324	377HS104NF1516T
6105CH	Backshell, 45 degree, aluminum with cad plating, shell size 15, for 05 cavity insert, tube size 12.70 mm (.500 inch), tube = FEP		06324	377HM104NF1516T
6105CI	Backshell, 90 degree, aluminum with cad plating, shell size 15, for 05 cavity insert, tube size 12.70 mm (.500 inch), tube = FEP		06324	377HN104NF15216T
6105CJ	Backshell, straight, aluminum with cad plating, shell size 17, for 08 cavity insert, tube size 15.88 mm (.625 inch), tube = FEP		06324	377HS104NF1720T
6105CK	Backshell, 45 degree, aluminum with cad plating, shell size 17, for 08 cavity insert, tube size 15.88 mm (.625 inch), tube = FEP		06324	377HM104NF1720-T
6105CL	Backshell, 90 degree, aluminum with cad plating, shell size 17, for 08 cavity insert, tube size 15.88 mm (.625 inch), tube = FEP		06324	377HN104NF1720T
6105CM	Backshell, straight, aluminum with cad plating, shell size 19, for 11 cavity insert, tube size 19.05 mm (.750 inch), tube = FEP		06324	377HS104NF1924T
6105CN	Backshell, 45 degree, aluminum with cad plating, shell size 19, for 11 cavity insert, tube size 19.05 mm (.750 inch), tube = FEP		06324	377HM104NF1924T
6105CO	Backshell, 90 degree, aluminum with cad plating, shell size 19, for 11 cavity insert, tube size 19.05 mm (.750 inch), tube = FEP		06324	377HN104NF1924T
6105CP	Backshell, straight, aluminum with cad plating, shell size 21, for 16 cavity insert, tube size 22.23 mm (.875 inch), tube=FEP		06324	377HS104NF2128T
6105CQ	Backshell, 45 degree, aluminum with cad plating, shell size 21, for 16 cavity insert, tube size 22.23 mm (.875 inch), tube=FEP		06324	377HM104NF2128T
6105CR	Backshell, 90 degree, aluminum with cad plating, shell size 21, for 16 cavity insert, tube size 22.23 mm (.875 inch), tube=FEP		06324	377HN104NF2128T
6105CS	Backshell, straight, aluminum with cad plating, shell size 23, for 21 cavity insert, tube size 25.4 mm (1 inch), tube = FEP		06324	377HS104NF2332T
6105CT	Backshell, 45 degree, aluminum with cad plating, shell size 23, for 21 cavity insert, tube size 25.4 mm (1 inch), tube = FEP		06324	377HM104NF2332T
6105CU	Backshell, 90 degree, aluminum with cad plating, shell size 23, for 21 cavity insert, tube size 25.4 mm (1 inch), tube = FEP		06324	377HN104NF2332T
6105CV	Backshell, straight, aluminum with cad plating, shell size 25, for 37 cavity insert, tube size 31.75 mm (1.25 inch), tube = FEP		06324	377HS104NF2540T
6105CW	Backshell, 45 degree, aluminum with cad plating, shell size 25, for 37 cavity insert, tube size 31.75 mm (1.25 inch), tube = FEP		06324	377HM104NF2540T
6105CX	Backshell, 90 degree, aluminum with cad plating, shell size 25, for 37 cavity insert, tube size 31.75 mm (1.25 inch), tube = FEP		06324	377HN104NF2540T
6105CY	Backshell, straight, aluminum with cad plating, shell size 25, for 29 cavity insert, tube size 25.4 mm (1 inch), tube = FEP		06324	377HS104NF2532T
6105CZ	Backshell, 45 degree, aluminum with cad plating, shell size 25, for 29 cavity insert, tube size 25.4 mm (1 inch), tube = FEP		06324	377HM104NF2532T
6105DA	Backshell, 90 degree, aluminum with cad plating, shell size 25, for 29 cavity insert, tube size 25.4 mm (1 inch), tube = FEP		06324	377HN104NF2532T

See footnotes on next page.

Source: https://assist.dla.mil -- Downloaded: 2016-12-31T21:10Z
Check the source to verify that this is the current version before use.

TABLE 6105 – II. Backshell, solid, single fiber cables, MIL-DTL-38999 connector, convoluted tubing cable entry interface, environmental resisting. 1/ - Continued.

1/ Planned to place components and connector assembly in WP 011 of NAVAIR 01-1A-505-4/T.O. 1-1A-14-4/TM 1-1500-323-24-4; Installation and Testing Practices Aircraft Fiber Optic Cabling.
2/ Change "T" in last digit of part number to "K" for cable entry interface with PEEK convoluted tubing instead of FEP convoluted tubing.
3/ Change "T" in last digit of part number to "A" for cable entry interface with banding adapter instead of for convoluted tubing. Cable entry diameter is same as that specified for convoluted tubing.
4/ Change "T" in last digit of part number to "N" for no cable entry interface.
5/ Change "NF" in 9th and 10th digits of part number to "XW" for backshell made from composite instead of aluminum.
6/ Change "NF" in 9th and 10th digits of part number to "Z1" for backshell made from stainless steel instead of aluminum.

6. Notes.

6.1 Intended use. On these platforms, the fiber optic cable assemblies intended to be inspected include (1) cable harnesses, (2) equipment (electronic module/package) such as a(n) ATR, LRC, LRM, LRU or WRA with internal fiber optics, (3) circuit card modules and assemblies with internal fiber optics, (4) fiber optic test jumpers, and (5) other miscellaneous cabling.

6.2 Advantages of solid backshells. The advantages include (1) fewer areas for seals to leak, (2) more economical for initial cost, (3) lighter weight, (4) smaller footprint, and (5) no vendor initial expensive investment for die-cast parts molds.

REQUIREMENT 6105

Source: https://assist.dla.mil -- Downloaded: 2016-12-31T21:10Z
Check the source to verify that this is the current version before use.

BACKSHELL, SPLIT

1. Purpose. This requirement refines or bounds (constrains) the selection of the fiber optic part referred to as the backshell. Specifically, the backshell is placed on the cable entry end of the multiple termini connector. The backshell is used to provide mechanical and environmental protection and to interface the protective cover or cable strain relief of the cable harness with the connector (see 3.1). A split backshell is one with either split shell halves or other type penetrations. This requirement is intended for developmental, prototype, production, rework, and modification programs on military platform fiber optic cable assemblies (see 6.2 and 6.3).

2. Applicable documents.

2.1 General. The documents listed in this section are specified in sections 3, 4, and 5 of this standard practice. This section does not include documents cited in other sections of this standard practice or recommended for additional information or as examples. While every effort has been made to ensure the completeness of this list, document users are cautioned that they must meet all specified requirements of documents cited in sections 3, 4, and 5 of this standard practice, whether or not they are listed.

2.2 Government documents.

2.2.1 Specifications, standards, and handbooks. The following specifications, standards, and handbooks form a part of this document to the extent specified herein. Unless otherwise specified, the issues of these documents are those cited in the solicitation or contract.

DEPARTMENT OF DEFENSE SPECIFICATION

MIL-PRF-64266	-	Connectors, Fiber Optic, Circular and Rectangular, Plug and Receptacle Style, Multiple Removable Genderless Termini, Environment Resisting General Specification for

(Copies of these documents are available online at http://quicksearch.dla.mil or from the Standardization Document Order Desk, 700 Robbins Avenue, Building 4D, Philadelphia, PA 19111-5094.)

2.3 Other Government documents, drawings, and publications. The following other Government documents, drawings, and publications form a part of this standard practice to the extent specified herein. Unless otherwise specified, the issues are these documents are those cited in the solicitation or contract.

NAVAIR 01-1A-505-4/ T.O. 1-1A-14-4/TM1-1500-232-24-4-	Installation and Testing Practices, Aircraft Fiber Optic Cabling.

(A copy of this document is available online at: https://mynatec.navair.navy.mil. NATEC has three different processes to obtain the manual, depending on if you are Government personnel (military and civilians), Contractors with a Government contract, or everyone else. If unable to access this Web Site or require further assistance, contact (1) NATEC Customer Service: 619.545.1888, (2) NATEC Website Status Hotline: 619.545.1706, or (3) NATEC Customer Service E-mail: nani_customerservice@navy.mil.)

2.4 Order of precedence. Unless otherwise noted herein or in the contract, in the event of a conflict between the text of this document and the references cited herein, the text of this document takes precedence. Nothing in this document, however, supersedes applicable laws and regulations unless a specific exemption has been obtained.

Source: https://assist.dla.mil -- Downloaded: 2016-12-31T21:10Z
Check the source to verify that this is the current version before use.

3. Definitions.

3.1 Backshell, fiber optic. Protective structure placed on the cable entry end of the multiple termini connector. This protective structure provides mechanical protection of the fiber optic cable at the cable entry end of the connector. For protective cable harnesses with single fiber cabling, the backshell is used to interface the protective covering or cable strain relief of the cable harness with the connector. The backshell is also used to provide a degree of environmental sealing, depending upon the specific design.

3.2 Backshell, solid, fiber optic. A solid backshell is one with a one-piece, solid shell or body.

3.3 Backshell, split, fiber optic. A split backshell is one with two or more pieces that fit together and form a shell over the cabling. The multiple pieces can be in the form of split shell halves or other type penetrations within the shell.

3.4 Cable harness, multiple segment (fiber optic). Two or more single segment cable harnesses mated together at the fiber optic connectors.

3.5 Cable harness, single segment (fiber optic). Single segment fiber harnesses consist of cabling with connectors on each end. Different configurations for this cable harness may be multiple termini connector cable harnesses (such as plug−to−plug or plug−to−receptacle configurations) and multiple termini plug/receptacle to single fiber connector harnesses.

3.6 Protective cable harness. A cable harness in which a structure or material placed over the cabling component as opposed to having exposed cabling (open cable harness). Types of protective coverings include convoluted tubing (preferred for a fiber optic application) and braid (such as cable wrap).

4. Requirements. Fiber optic backshell shall be standardized for commonality compliance across platforms. Commonality compliance is that which bounds or restricts the parts to those recognized by the Joint Fiber Optic Working Group (JFOWG), cited in the General Series Technical Manual for Fiber Optic Cabling (NAVAIR 01-1A-505-1/T.O. 1-1A-14/TM 1-1500-232-24-4) and, as a result, cited in this Standard Practice.

5. Implementation. Unless otherwise specified by the applicable Platform Office, fiber optic backshells used shall be restricted to those in table 6106 – I. Note that part numbers in the table must be varied for parameter changes such as for cable entry interface (banding adapter or no cable entry interface instead of that for convoluted tubing). These backshells includes those that are a part of a fiber optic cable harness.

REQUIREMENT 6106

Source: https://assist.dla.mil -- Downloaded: 2016-12-31T21:10Z
Check the source to verify that this is the current version before use.

TABLE 6106 – I. Backshell, split, single fiber cables, MIL-PRF-64266 connector, convoluted tubing cable entry interface, environmental resisting. 1/

Item	Description	Quantity	CAGE code	Part number 2/ - 6/
6106AA	Backshell, straight, aluminum with cad plating, shell size 11, for 02 cavity insert, tube size 9.52 mm (.375 inch), tube = FEP		53669	1021660-B02FBTH
6106AB	Backshell, 45 degree, aluminum with cad plating, shell size 11, for 02 cavity insert, tube size 9.52 mm (.375 inch), tube = FEP		53669	1021661-B02FBTH
6106AC	Backshell, 90 degree, aluminum with cad plating, shell size 11, for 02 cavity insert, tube size 9.52 mm (.375 inch), tube = FEP		53669	1021662-B02FBTH
6106AD	Backshell, straight, aluminum with cad plating, shell size 11, for 04 cavity insert, tube size 11.13 mm (.438 inch), tube = FEP		53669	1021660-B04FBTH
6106AE	Backshell, 45 degree, aluminum with cad plating, shell size 11, for 04 cavity insert, tube size 11.13 mm (.438 inch), tube = FEP		53669	1021661-B04FBTH
6106AF	Backshell, 90 degree, aluminum with cad plating, shell size 11, for 04 cavity insert, tube size 11.13 mm (.438 inch), tube = FEP		53669	1021662-B04FBTH
6106AG	Backshell, straight, aluminum with cad plating, shell size 13, for 06 cavity insert, tube size 12.70 mm (.500 inch), tube = FEP		53669	1021660-C06FBTH
6106AH	Backshell, 45 degree, aluminum with cad plating, shell size 13, for 06 cavity insert, tube size 12.70 mm (.500 inch), tube = FEP		53669	1021661-C06FBTH
6106AI	Backshell, 90 degree, aluminum with cad plating, shell size 13, for 06 cavity insert, tube size 12.70 mm (.500 inch), tube = FEP		53669	1021662-C06FBTH
6106AJ	Backshell, straight, aluminum with cad plating, shell size 15, for 08 cavity insert, tube size 19.05 mm (.750 inch), tube = FEP		53669	1021660-D08FBTH
6106AK	Backshell, 45 degree, aluminum with cad plating, shell size 15, for 08 cavity insert, tube size 19.05 mm (.750 inch), tube = FEP		53669	1021661-D08FBTH
6106AL	Backshell, 90 degree, aluminum with cad plating, shell size 15, for 08 cavity insert, tube size 19.05 mm (.750 inch), tube = FEP		53669	1021662-D08FBTH
6106AM	Backshell, straight, aluminum with cad plating, shell size 15, for 10 cavity insert, tube size 19.05 mm (.750 inch), tube = FEP		53669	1021660-D10FBTH
6106AN	Backshell, 45 degree, aluminum with cad plating, shell size 15, for 10 cavity insert, tube size 19.05 mm (.750 inch), tube = FEP		53669	1021661-D10FBTH
6106AO	Backshell, 90 degree, aluminum with cad plating, shell size 15, for 10 cavity insert, tube size 19.05 mm (.750 inch), tube = FEP		53669	1021662-D10FBTH
6106AP	Backshell, straight, aluminum with cad plating, shell size 23, for 36 cavity insert, tube size 31.75 mm (1.25 inch), tube = FEP		53669	1021660-E36FBTH
6106AQ	Backshell, 45 degree, aluminum with cad plating, shell size 23, for 36 cavity insert, tube size 31.75 mm (1.25 inch), tube = FEP		53669	1021661-E36FBTH
6106AR	Backshell, 90 degree, aluminum with cad plating, shell size 23, for 36 cavity insert, tube size 31.75 mm (1.25 inch), tube = FEP		53669	1021662-E36FBTH

1/ Planned to place components and connector assembly in WP 011 of NAVAIR 01-1A-505-4/T.O. 1-1A-14-4/TM 1-1500-323-24-4., Installation and Testing Practices, Aircraft Fiber Optic Cabling.
2/ Change "T" in 13th digit of part number to "K" for cable entry interface with PEEK convoluted tubing instead of FEP convoluted tubing.
3/ Change "T" in 13th digit of part number to "A" for cable entry interface with banding adapter instead of for convoluted tubing. Cable entry diameter is same as that specified for convoluted tubing.
4/ Change "T" in 13th digit of part number to "N" for no cable entry interface.
5/ Change "FB" in 12th and 13th digits of part number to "XW" for backshell made from composite instead of aluminum.
6/ Change "NF" in 9th and 10th digits of part number to "Z1" for backshell made from stainless steel instead of aluminum.

Source: https://assist.dla.mil -- Downloaded: 2016-12-31T21:10Z
Check the source to verify that this is the current version before use.

6. Notes.

6.1 Intended use. On these platforms, the fiber optic cable assemblies intended to be inspected include (1) cable harnesses, (2) equipment (electronic module/package) such as a(n) ATR, LRC, LRM, LRU or WRA with internal fiber optics, (3) circuit card modules and assemblies with internal fiber optics, (4) fiber optic test jumpers, and (5) other miscellaneous cabling.

6.2 Advantages of split backshells. The advantages include (1) do not have to slide the backshell down the cable (an advantage where there is no room or no cable length to do so), (2) can inspect/re-enter without removing the backshell front and rear adapters, (3) easier to assemble, (4) easier access, (5) more economical for maintenance and repair.

6.3 Disadvantages. The disadvantages include (1) larger footprint which eliminates its use for some applications/locations, (2) more weight which eliminates its use for some applications.

Source: https://assist.dla.mil -- Downloaded: 2016-12-31T21:10Z
Check the source to verify that this is the current version before use.

EMI RETENTION NUT

1. Purpose. This requirement refines or bounds (constrains) the selection of the fiber optic part referred to as the EMI retention nut. Specifically, the EMI retention nut is placed on the cable entry end of the multiple termini connector. The EMI retention nut is used in lieu of a backshell to provide environmental protection from entry or penetration of electromagnetic radiation. A common application for an EMI retention nut is one used in conjunction with a connector receptacle at the panel of an equipment module (placed inside the equipment module). This requirement is intended for developmental, prototype, production, rework, and modification programs on military platform fiber optic cable assemblies.

2. Applicable documents.

2.1 General. The documents listed in this section are specified in sections 3, 4, and 5 of this standard practice. This section does not include documents cited in other sections of this standard practice or recommended for additional information or as examples. While every effort has been made to ensure the completeness of this list, document users are cautioned that they must meet all specified requirements of documents cited in sections 3, 4, and 5 of this standard practice, whether or not they are listed.

2.2 Government documents.

2.2.1 Specifications, standards, and handbooks. The following specifications, standards, and handbooks form a part of this document to the extent specified herein. Unless otherwise specified, the issues of these documents are those cited in the solicitation or contract.

DEPARTMENT OF DEFENSE SPECIFICATIONS

MIL-DTL-38999	-	Connectors, Electrical, Circular, Miniature, High Density, Quick Disconnect, (Bayonet Threaded and Breech Coupling), General Specification for.
MIL-PRF-64266	-	Connectors, Fiber Optic, Circular and Rectangular, Plug and Receptacle Style, Multiple Removable Genderless Termini, Environment Resisting General Specification for

(Copies of these documents are available online at http://quicksearch.dla.mil or from the Standardization Document Order Desk, 700 Robbins Avenue, Building 4D, Philadelphia, PA 19111-5094.)

2.3 Other. Government documents, drawings, and publications. The following other Government documents, drawings, and publications form a part of this standard practice to the extent specified herein. Unless otherwise specified, the issues are these documents are those cited in the solicitation or contract.

NAVAIR 01-1A-505-4/ T.O. 1-1A-14-4/TM1-1500-232-24-4-	Installation and Testing Practices, Aircraft Fiber Optic Cabling.

(A copy of this document is available online at: https://mynatec.navair.navy.mil. NATEC has three different processes to obtain the manual, depending on if you are Government personnel (military and civilians), Contractors with a Government contract, or everyone else. If unable to access this Web Site or require further assistance, contact (1) NATEC Customer Service: 619.545.1888, (2) NATEC Website Status Hotline: 619.545.1706, or (3) NATEC Customer Service E-mail: nani_customerservice@navy.mil.)

2.4 Order of precedence. Unless otherwise noted herein or in the contract, in the event of a conflict between the text of this document and the references cited herein, the text of this document takes precedence. Nothing in this document, however, supersedes applicable laws and regulations unless a specific exemption has been obtained.

Source: https://assist.dla.mil -- Downloaded: 2016-12-31T21:10Z
Check the source to verify that this is the current version before use.

3. Definitions.

3.1 EMI retention nut, fiber optic. A component placed on the cable entry end of the multiple termini connector in lieu of a backshell to provide environmental protection from entry or penetration of electromagnetic radiation. A common application for an EMI retention nut is one used in conjunction with a connector receptacle at the panel of an equipment module.

3.2 End user equipment. This equipment is either the source or destination of an optical signal. This equipment can be a cabinet, case, panel, or device. The devices include WRA: Weapons replaceable assembly, LRM: Line replaceable module, and LRU: Line replaceable unit.

3.3 Equipment module. This device is either the source or destination of an optical signal and is packaged in the form of a removable module from a rack or cabinet. The devices include WRA: Weapons replaceable assembly, LRM: Line replaceable module, and LRU: Line replaceable unit.

4. Requirements. Fiber optic EMI retention nut shall be standardized for commonality compliance across platforms. Commonality compliance is that which bounds or restricts the parts to those recognized by the Joint Fiber Optic Working Group (JFOWG), cited in the General Series Technical Manual for Fiber Optic Cabling (NAVAIR 01-1A-505-1/T.O. 1-1A-14/TM 1-1500-232-24-4) and, as a result, cited in this Standard Practice.

5. Implementation. Unless otherwise specified by the applicable Platform Office, EMI retention nut used shall be restricted to those in table 6107 – I and table 6107 – II. These EMI retention nuts include those that are a part of a fiber optic connection or interface port at the panel of an equipment module.

TABLE 6107 – I. EMI retention nut, MIL-PRF-64266 connector, cable entry interface accessory. 1/

Item	Description 2/, 3/	Quantity	CAGE code	Part number 4/- 6/
6107AA	EMI retention nut, straight, aluminum with cad plating, shell size 11, for 02 cavity insert, 50.8 mm (2 inch) braid length		06324	319HS001NF 11022
6107AB	EMI retention nut, straight, aluminum with cad plating, shell size 11, for 04 cavity insert, 50.8 mm (2 inch) braid length		06324	319HS001NF 11032
6107AC	EMI retention nut, straight, aluminum with cad plating, shell size 13, for 06 cavity insert, 50.8 mm (2 inch) braid length		06324	319HS001NF 13032
6107AD	EMI retention nut, straight, aluminum with cad plating, shell size 15, for 08 cavity insert, 50.8 mm (2 inch) braid length		06324	319HS001NF 15042
6107AE	EMI retention nut, straight, aluminum with cad plating, shell size 15, for 10 cavity insert, 50.8 mm (2 inch) braid length		06324	319HS001NF 15052
6107AF	EMI retention nut, straight, aluminum with cad plating, shell size 23, for 36 cavity insert, 50.8 mm (2 inch) braid length		06324	319HS001NF 23102

1/ Planned to place components and connector assembly in WP 011 of NAVAIR 01-1A-505-4/T.O. 1-1A-14-4/TM 1-1500-323-24-4, Installation and Testing Practices, Aircraft Fiber Optic Cabling.
2/ Braid cable entry diameter sized for an 80 percent or greater fill.
3/ Tubing ID to equivalent Glenair tube size #: 3/16 = 01, 5/16 = 03, 3/8 = 04, 7/16 = 05, 1/2 = 06, 5/8 = 08, 3/4 = 10, 7/8 = 12, 1 = 14, 1.25 = 15.
4/ Change the last digit of PIN from “2” to a different number (in 25.4 mm (1 inch) increments) for a longer braid length.
5/ Change “S” in fifth digit of PIN from “S” to “B” for a 45 degree orientation (versus straight), to “A” for a 90 degree orientation.
6/ Change “NF” in 9th and 10th digits of PIN to “XW” for a composite body (instead of aluminum), to “Z1” for a stainless steel body.

Source: https://assist.dla.mil -- Downloaded: 2016-12-31T21:10Z
Check the source to verify that this is the current version before use.

TABLE 6107 – II. EMI retention nut, MIL-DTL-38999 connector, cable entry interface accessory. 1/

Item	Description	Quantity	CAGE code	Part number 2/ - 6/
6107CA	EMI retention nut, straight, aluminum with cad plating, shell size 11, for 02 cavity insert, 50.8 mm (2 inch) braid length		06324	319HS001NF 11022
6107CB	EMI retention nut, straight, aluminum with cad plating, shell size 13, for 04 cavity insert, 50.8 mm (2 inch) braid length		06324	319HS001NF 13032
6107CC	EMI retention nut, straight, aluminum with cad plating, shell size 15, for 05 cavity insert, 50.8 mm (2 inch) braid length		06324	319HS001NF 15032
6107CD	EMI retention nut, straight, aluminum with cad plating, shell size 17, for 08 cavity insert, 50.8 mm (2 inch) braid length		06324	319HS001NF 17042
6107CE	EMI retention nut, straight, aluminum with cad plating, shell size 19, for 11 cavity insert, 50.8 mm (2 inch) braid length		06324	319HS001NF 19052
6107CF	EMI retention nut, straight, aluminum with cad plating, shell size 21, for 16 cavity insert, 50.8 mm (2 inch) braid length		06324	319HS001NF 21082
6107CG	EMI retention nut, straight, aluminum with cad plating, shell size 23, for 21 cavity insert, 50.8 mm (2 inch) braid length		06324	319HS001NF 23082
6107CH	EMI retention nut, straight, aluminum with cad plating, shell size 25, for 37 cavity insert, 50.8 mm (2 inch) braid length		06324	319HS001NF 25122
6107CI	EMI retention nut, straight, aluminum with cad plating, shell size 25, for 29 cavity insert, 50.8 mm (2 inch) braid length		06324	319HS001NF 25102

1/ Planned to place components and connector assembly in WP 011 of NAVAIR 01-1A-505-4/T.O. 1-1A-14-4/TM 1-1500-323-24-4, Installation and Testing Practices, Aircraft Fiber Optic Cabling.
2/ Change the last digit of PIN from "2" to a different number (in 25.4 mm (1 inch) increments) for a longer braid length.
3/ Change "S" in fifth digit of PIN from "S" to "B" for a 45 degree orientation (versus straight), to "A" for a 90 degree orientation.
4/ Change "NF" in 9th and 10th digits of PIN to "XW" for a composite body (instead of aluminum), to "Z1" for a stainless steel body.
5/ Braid cable entry diameter sized for an 80 percent or greater fill.
6/ Tubing ID to equivalent Glenair Tube size #: 3/16 = 01, 5/16 = 03, 3/8 = 04, 7/16 = 05, 1/2 = 06, 5/8 = 08, 3/4 = 10, 7/8 = 12, 1 = 14, 1.25 = 15.

6. Notes.

6.1 Intended use. On these platforms, the fiber optic cable assemblies intended to be inspected include (1) equipment (electronic module/package) such as a(n) ATR, LRC, LRM, LRU or WRA with internal fiber optics, (2) circuit card modules and assemblies with internal fiber optics, and (3) other miscellaneous cabling.

Source: https://assist.dla.mil -- Downloaded: 2016-12-31T21:10Z
Check the source to verify that this is the current version before use.

BINDING AND HOLDING COMPONENTS FOR CABLING ASSEMBLY

1. Purpose. This requirement refines or bounds (constrains) the selection of the fiber optic part used in a cable harness or other type fiber optic cabling for binding, holding, or otherwise securing other cable harness components. Specific materials include banding straps, lacing tape, and heat shrinkable insulation sleeves. This requirement is intended for developmental, prototype, production, rework, and modification programs on military platform fiber optic cable assemblies.

2. Applicable documents.

2.1 General. The documents listed in this section are specified in sections 3, 4, and 5 of this standard practice. This section does not include documents cited in other sections of this standard practice or recommended for additional information or as examples. While every effort has been made to ensure the completeness of this list, document users are cautioned that they must meet all specified requirements of documents cited in sections 3, 4, and 5 of this standard practice, whether or not they are listed.

2.2 Government documents.

2.2.1 Specifications, standards, and handbooks. The following specifications, standards, and handbooks form a part of this document to the extent specified herein. Unless otherwise specified, the issues of these documents are those cited in the solicitation or contract.

COMMERCIAL ITEM DESCRIPTIONS

A-A-52083	-	Tape, Lacing and Tying, Glass.
A-A-59163	-	Insulation Tape, Electrical, High Temperature, Polytetrafluoroethylene Pressure Sensitive.
A-A-59474	-	Insulation Tape, Electrical, Self-Adhering, Unsupported, Silicone Rubber.

DEPARTMENT OF DEFENSE SPECIFICATION

MIL-I-19166	-	Insulation Tape, Electrical, High-Temperature, Glass Fiber, Pressure-Sensitive.

(Copies of these documents are available online at http://quicksearch.dla.mil or from the Standardization Document Order Desk, 700 Robbins Avenue, Building 4D, Philadelphia, PA 19111-5094.)

2.3 Other Government documents, drawings, and publications. The following other Government documents, drawings, and publications form a part of this standard practice to the extent specified herein. Unless otherwise specified, the issues are these documents are those cited in the solicitation or contract.

NAVAIR 01-1A-505-4/ T.O. 1-1A-14-4/TM1-1500-232-24-4-	Installation and Testing Practices, Aircraft Fiber Optic Cabling.

(A copy of this document is available online at: https://mynatec.navair.navy.mil. NATEC has three difference processes to obtain the manual, depending on if you are Government personnel (military and civilians), Contractors with a Government contract, or everyone else. If unable to access this Web Site or require further assistance, contact (1) NATEC Customer Service: 619.545.1888, (2) NATEC Website Status Hotline: 619.545.1706, or (3) NATEC Customer Service E-mail: nani_customerservice@navy.mil.)

Source: https://assist.dla.mil -- Downloaded: 2016-12-31T21:10Z
Check the source to verify that this is the current version before use.

2.4 Non-Government publications. The following documents form a part of this document to the extent specified herein. Unless otherwise specified, the issues of these documents are cited in the solicitation or contract.

SAE INTERNATIONAL

SAE-AMS-DTL-23053/5	-	Insulation Sleeving, Electrical, Heat Shrinkable, Polyolefin, Flexible, Crosslinked.
SAE AS 85049/128	-	Electrical Backshell, Shield Band, Category 7 (for AS85049/82 - /90, /93, /109-/117 Accessories.

(Copies of these documents are available on line at www.sae.org from SAE International, 400 Commonwealth Drive, Warrendale, PA 15096-0001, and Tel: 877-606-7323 [inside USA and Canada] or 724-776-4970 [outside USA], email at CustomerService@sae.org.)

2.5 Order of precedence. Unless otherwise noted herein or in the contract, in the event of a conflict between the text of this document and the references cited herein, the text of this document takes precedence. Nothing in this document, however, supersedes applicable laws and regulations unless a specific exemption has been obtained.

3. Definitions.

3.1 Banding strap. A stainless steel, adjustable, tie-down band used to secure cable wrap to the banding platform of the backshell rear adapter. The banding strap includes a self-clinching clamp to hold the band in place in the longitudinal (long) direction.

3.2 Cable wrap. One type of protective cover on a protective cable harness that consists of wrap around, braided sleeving and that provides protection of the fiber optic cable bundle against mechanical wear, abrasion, impacts, and chafing and fluid contact. The cable wrap is secured along the length with lacing tape to permit re-entry and at the backshell with a banding strap.

3.3 Cable bundle, fiber optic. Single fiber cables grouped together and secured by lacing tape. The cable bundle can be placed in convoluted tubing, used in various protected harness configurations, or used as is in an open cable harness configuration.

3.4 Cable, fiber optic. A cable that contains optical fibers. The cable may be of a tight buffer or a loose tube design.

3.5 Cabling, fiber optic. Fiber optic cabling is a term used to include single fiber cable, multiple fiber cable, fiber optic cable bundles, and fiber optic cable harnesses. The (optical) fiber is the optical conduit or waveguide transmission media, whereas metallic conductor (wire) is used in an electrical cable. Cable structure is added to make the fibers easier to handle and maintain. The fiber is a thin piece of glass (with a diameter usually around 125 micrometers) that contains and transports the light signals.

3.6 Cable harness, fiber optic. A cable assembly that consists of fiber optic cabling with or without cables run to different breakouts (branches) and with fiber optic connectors at the end of each cable run or segment. The cabling may contain a protective cover (protected cable harness) or remain exposed (open cable harness). Types of protective coverings include convoluted tubing (preferred for a fiber optic application) and braid. The connector is usually a multiple termini connector plug/receptacle and configured with connector accessories such as a backshell for cable strain relief, a backshell for affixing the protective covering to the connector, or an EMI retention nut. The type protective covering used must not be one that stresses the cable.

3.7 Lacing tape. Tie-string consisting of a continuous filament, glass yarn with a synthetic finish used to secure bundles of fiber optic cabling and as a secondary support for fiber optic cable harnesses. This yarn has high resistance to aging and low moisture absorption.

3.8 Cable harness, single segment, fiber optic. Single fiber harnesses consist of cabling with connectors on each end. Different configurations for this cable harness may be multiple termini connector cable harnesses (such as plug-to-plug or plug-to-receptacle configurations) and multiple termini plug/receptacle to single fiber connector harnesses.

REQUIREMENT 6108

Source: https://assist.dla.mil -- Downloaded: 2016-12-31T21:10Z
Check the source to verify that this is the current version before use.

4. Requirements. Fiber optic binding and holding components shall be standardized for commonality compliance across platforms. Commonality compliance is that which bounds or restricts the parts to those recognized by the Joint Fiber Optic Working Group (JFOWG), cited in the General Series Technical Manual for Fiber Optic Cabling (NAVAIR 01-1A-505-1/T.O. 1-1A-14/TM 1-1500-232-24-4) and, as a result, cited in this Standard Practice.

5. Implementation. Unless otherwise specified by the applicable Platform Office, fiber optic binding and holding components used shall be restricted to those in table 6108 - I. These binding and holding components include those that are a part of a fiber optic cable harness and those to transition to end user equipment interfacing with the cable harness.

TABLE 6108 – I. Binding and holding components for cabling assembly. 1/

Item	Description	Quantity	CAGE code	Part number
6108AA	Teflon tape, electrical, A-A-59474 type I, high temperature, pressure sensitive, 25.4 mm x 32.92 m (1 inch x 108 feet)	N/A		NSN 5970-01-012-4280
6108AB	Insulating tape, electrical, A-A-59163 type II, red, non-adhesive, self-bonding, 25.4 mm x 10.97 m (1 inch x 36 feet)	N/A		NSN 5970-00-949-4846
6108AC	Lacing tape, A-A-52083 size 3, finish C, glass	N/A		NSN 4020-01-411-2548
6108AD	Heat shrinkable insulation sleeving, SAE-AMS-DTL-23053/5 electrical, polyolefin, flexible, crosslinked	N/A		FSC 5970
6108AE	Insulating tape, electrical, A-A-59163 type II, black, non-adhesive, self-bonding, 25.4 mm x 10.97 m (1 inch x 36 feet)	N/A		NSN 5970-00-955-9976
6108AF	Banding strap, tie down for backshell sleeve, stainless steel, 363 mm(14.3 inch) long 2/	N/A		NSN 5975-01-379-7230
6108AG	Banding strap, tie down for backshell sleeve, stainless steel, 457 mm (18 inch) long		70847	A11089
6108AH	Insulation tape, MIL-I-19166, electrical, high temperature, glass fiber, pressure sensitive, 7 mil thick, 12.7 mm wide x 32.92 m long (0.5 inch wide, 108 feet long)	N/A		NSN 5970-00-180-6087 NSN 5970-00-186-6627
6108AI	Loctite 222	1	08RC6	0700-5020

1/ NAVAIR 01-1A-505-4/T.O. 1-1A-14-4/TM 1-1500-323-24-4 Installation and Testing Practices, Aircraft Fiber Optic Cabling, see WP 011 01.
2/ Alternative is to specify banding strap, tie down for backshell sleeve, stainless steel, in accordance with SAE AS85049/128 361.95 mm long x 6.35 mm wide (14.25 inch long x .25 inch wide).

6. Notes.

6.1 Intended use. The fiber optic cable binding and holding components intended to be included as part of (1) cable harnesses, (2) equipment (electronic module/package) such as a(n) ATR, LRC, LRM, LRU or WRA with internal fiber optics, (3) circuit card modules and assemblies with internal fiber optics, (4) fiber optic test jumpers, and (5) other miscellaneous cabling.

REQUIREMENT 6108

Source: https://assist.dla.mil -- Downloaded: 2016-12-31T21:10Z
Check the source to verify that this is the current version before use.

CABLE WRAP

1. Purpose. This requirement refines or bounds (constrains) the selection of the fiber optic part used in a cable harness or other type fiber optic cabling as one option to provide a protective cover over the fiber optic cable bundles in the cable harness. This requirement is intended for developmental, prototype, production, rework, and modification programs on military platform fiber optic cable assemblies.

2. Applicable documents.

2.1 General. The documents listed in this section are specified in sections 3, 4, and 5 of this standard practice. This section does not include documents cited in other sections of this standard practice or recommended for additional information or as examples. While every effort has been made to ensure the completeness of this list, document users are cautioned that they must meet all specified requirements of documents cited in sections 3, 4, and 5 of this standard practice, whether or not they are listed.

2.2 Other government documents, drawings, and publications. The following other government documents, drawings, and publications form a part of this standard practice to the extent specified herein. Unless otherwise specified, the issues are these documents are those cited in the solicitation or contract.

NAVAIR 01-1A-505-4/ T.O. 1-1A-14-4/TM1-1500-232-24-4-	Installation and Testing Practices Aircraft Fiber Optic Cabling

(A copy of this document is available online at: https://mynatec.navair.navy.mil. NATEC has three different processes to obtain the manual, depending on if you are Government personnel (military and civilians), Contractors with a Government contract, or everyone else. If unable to access this Web Site or require further assistance, contact (1) NATEC Customer Service: 619.545.1888, (2) NATEC Website Status Hotline: 619.545.1706, or (3) NATEC Customer Service E-mail: nani_customerservice@navy.mil.)

2.3 Order of precedence. Unless otherwise noted herein or in the contract, in the event of a conflict between the text of this document and the references cited herein, the text of this document takes precedence. Nothing in this document, however, supersedes applicable laws and regulations unless a specific exemption has been obtained.

3. Definitions.

3.1 Cable wrap. A type of cover on a protective cable harness that consists of wrap around, braided sleeving and that provides protection to the fiber optic cable bundle against mechanical wear, abrasion, impacts, chafing and fluid contact. The cable wrap is secured along the length with lacing tape to permit re-entry and at the backshell with a banding strap.

3.2 Cable bundle, fiber optic. Single fiber cables grouped together and secured by lacing tape. The cable bundle can be placed in convoluted tubing, used in various protected harness configurations, or used as is in an open cable harness configuration.

3.3 Cable, fiber optic. A cable that contains optical fibers. The cable may be of a tight buffer or a loose tube design.

3.4 Cabling, fiber optic. Fiber optic cabling is a term used to include single fiber cable, multiple fiber cable, fiber optic cable bundles, and fiber optic cable harnesses. The (optical) fiber is the optical conduit or waveguide transmission media, whereas metallic conductor (wire) is used in an electrical cable. Cable structure is added to make the fibers easier to handle and maintain. The fiber is a thin piece of glass (with a diameter usually around 125 micrometers) that contains and transports the light signals.

3.5 Cable harness, fiber optic. A cable assembly that consists of fiber optic cabling with or without cables run to different breakouts (branches) and with fiber optic connectors at the end of each cable run or segment. The cabling may contain a protective cover (protected cable harness) or remain exposed (open cable harness). Types of protective coverings include convoluted tubing (preferred for a fiber optic application) and braid. The connector is usually a multiple termini connector plug/receptacle and configured with connector accessories such as a backshell for cable strain relief, a backshell for affixing the protective covering to the connector, or an EMI retention nut. The type protective covering used must not be one that stresses the cable.

Source: https://assist.dla.mil -- Downloaded: 2016-12-31T21:10Z
Check the source to verify that this is the current version before use.

3.6 Cable harness, single sergment (fiber optic). Single fiber harnesses consist of cabling with connectors on each end. Different confgurations for this cable harness may be multiple termini connector cable harnesses (such as plug-to-plug or plug –to-receptacle configurations) and multiple termini plug/receptacle to single fiber connector harnesses.

4. Requirements. Fiber optic cable wrap shall be standardized for commonality compliance across platforms. Commonality compliance is that which bounds or restricts the parts to those recognized by the Joint Fiber Optic Working Group (JFOWG), cited in the General Series Technical Manual for Fiber Optic Cabling (NAVAIR 01-1A-505-1/T.O. 1-1A-14/TM 1-1500-232-24-4) and, as a result, cited in this Standard Practice.

5. Implementation. Unless otherwise specified by the applicable Platform Office, fiber optic cable wrap used shall be restricted to those in table 6109 – I. This protective cover includes those that are a part of a fiber optic cable harness.

TABLE 6109 – I. Cable wrap for cabling assembly. 1/, 2/

Item	Description 3/	Quantity	CAGE code	Part number
6109AA	Cable wrap, self-wrapping, fiber optic, halogen free, for 4.78 mm (3/16 inch) dia, product description: Roundit 2000NX VTR 5-5/7, 4/	150 m (492') per box	81851	5676000579S
6109AB	Cable wrap, self-wrapping, fiber optic, halogen free, for 7.92 mm (5/16 inch) dia, product description: Roundit 2000NX VTR 8-5/7, 4/	100 m (328') per box(	81851	5676000879S
6109AC	Cable wrap, self-wrapping, fiber optic, halogen free, for 12.7 mm (1/2 inch) dia, product description: Roundit 2000NX VTR 13-5/7, 4/	50 m (164') per box	81851	5676001379S
6109AD	Cable wrap, self-wrapping, fiber optic, halogen free, for 19.05 mm (3/4 inch) dia, product description: Roundit 2000NX VTR 19-5/7, 4/	25 m (82') per box	81851	5676001979S
6109AE	Cable wrap, self-wrapping, fiber optic, halogen free, for 25.4 mm (1 inch) dia, product description: Roundit 2000NX VTR 25-5/7, 4/	25 m (82') per box	81851	5676002579S
6109AF	Cable wrap, self-wrapping, fiber optic, halogen free, for 31.75 mm (1 - 1/4 inch) dia, product description: Roundit 2000NX VTR 32-5/7, 4/	25 m (82') per box	81851	5676002579S
6109AG	Cable wrap, self-wrapping, fiber optic, halogen free, for 38.1 mm (1 - 1/2 inch) dia, product description: Roundit 2000NX VTR 40-5/7, 4/	25 m (82') per box	81851	5676004079S
6109CA	Cable wrap, self-wrapping, electrical, halogen free, for 4.78 mm (3/16 inch) dia, product description: Roundit 2000NX 5-5, 5/ NSN 5970-01-531-2825	150 m (492') per box	81851	5676000507S
6109CB	Cable wrap, self-wrapping, electrical, halogen free, for 7.92 mm (5/16 inch) dia, product description: Roundit 2000NX 8-5, 5/ NSN 5970-01-527-0231 (not stocked – see 6/)	100 m (328') per box(	81851	5676000807S
6109CC	Cable wrap, self-wrapping, electrical, halogen free, for 12.7 mm (1/2 inch) dia, product description: Roundit 2000NX13-5, 5/ NSN 4720-01-475-0990	50 m (164') per box	81851	5676001307S
6109CD	Cable wrap, self-wrapping, electrical, halogen free, for 19.05 mm (3/4 inch) dia, product description: Roundit 2000NX 19-5, 5/	25 m (82') per box	81851	5676001907S
6109CE	Cable wrap, self-wrapping, electrical, halogen free, for 25.4 mm (1 inch) dia, product description: Roundit 2000NX 25-5, 5/	25 m (82') per box	81851	5676002507S
6109CF	Cable wrap, self-wrapping, electrical, halogen free, for 31.75 mm (1 – 1.4 inch) dia, product description: Roundit 2000NX 32-5, 5/	25 m (82') per box	81851	5676002507S
6109CG	Cable wrap, self-wrapping, electrical, halogen free, for 38.1 mm (1 – 1/2 inch) dia, product description: Roundit 2000NX 40-5, 5/	25 m (82') per box	81851	5676004007S

1/ Also referred to a Nomex braid, protective wrap.
2/ NAVAIR 01-1A-505-4/T.O. 1-1A-14-4/TM 1-1500-323-24-4, Installation and Testing Practices, Aircraft Fiber Optic Cabling.
3/ Ratings include: Temperature range -60ºC to 200ºC, halogen free, fluid resistant, smoke/flammability/toxicity rated.
4/ Preferred for use in fiber optic cable harnesses. Usage: exclusively for fiber optic cable harnesses, olive drab in color with a violet stripe along the longitudinal direction (length). Violet stripe indicates the cable harness is composed of fiber optic cables.
5/ Less preferred for use in fiber optic cable harnesses. Usage: Primarily intended for electrical cable harnesses, olive drab in color. Used in fiber optic cable harnesses also (primarily in legacy systems).

6. Notes.

6.1 Intended use. The fiber optic cable wrap is intended to be included as part of (1) cable harnesses, and (2) other miscellaneous cabling.

REQUIREMENT 6109

Source: https://assist.dla.mil -- Downloaded: 2016-12-31T21:10Z
Check the source to verify that this is the current version before use.

PLASTIC DUST CAPS

1. Purpose. This requirement refines or bounds (constrains) the selection of the fiber optic part used in on a cable harness or other type fiber optic cabling with a multiple termini connector as one (less preferred) option to provide a protective cover over the termini on a fiber optic connector. This requirement is intended for developmental, prototype, production, rework, and modification programs on military platform fiber optic cable assemblies.

2. Applicable documents.

2.1 General. The documents listed in this section are specified in sections 3, 4, and 5 of this standard practice. This section does not include documents cited in other sections of this standard practice or recommended for additional information or as examples. While every effort has been made to ensure the completeness of this list, document users are cautioned that they must meet all specified requirements of documents cited in sections 3, 4, and 5 of this standard practice, whether or not they are listed.

2.2 Government documents.

2.2.1 Specifications, standards, and handbooks. The following specifications, standards, and handbooks form a part of this document to the extent specified herein. Unless otherwise specified, the issues of these documents are those cited in the solicitation or contract.

DEPARTMENT OF DEFENSE SPECIFICATIONS

MIL-DTL-28840	-	Connectors, Electrical, Circular, Threaded, High Density, High Shock, Shipboard, Class D, General Specification for.
MIL-PRF-28876	-	Connectors, Fiber Optic, Circular, Plug and Receptacle Style, Multiple Removable Termini, Genera Specification for.
MIL-DTL-38999	-	Connectors, Electrical, Circular, Miniature, High Density, Quick Disconnect, (Bayonet Threaded and Breech Coupling), General Specification for.
MIL-DTL-38999/26	-	Connectors, Electrical, Plug, Circular, Threaded, Straight Removable Crimp Contacts, Series III, Metric.
MIL-PRF-64266	-	Connectors, Fiber Optic, Circular and Rectangular, Plug and Receptacle Style, Multiple Removable Genderless Termini, Environment Resisting General Specification for

(Copies of these documents are available online at http://quicksearch.dla.mil or from the Standardization Document Order Desk, 700 Robbins Avenue, Building 4D, Philadelphia, PA 19111-5094.)

2.3 Other Government documents, drawings, and publications. The following other Government documents, drawings, and publications form a part of this standard practice to the extent specified herein. Unless otherwise specified, the issues are these documents are those cited in the solicitation or contract.

NAVAIR 01-1A-505-4/ T.O. 1-1A-14-4/TM1-1500-232-24-4-	Installation and Testing Practices Aircraft Fiber Optic Cabling.

(A copy of this document is available online at: https://mynatec.navair.navy.mil. NATEC has three different processes to obtain the manual, depending on if you are Government personnel (military and civilians), Contractors with a Government contract, or everyone else. If unable to access this Web Site or require further assistance, contact (1) NATEC Customer Service: 619.545.1888, (2) NATEC Website Status Hotline: 619.545.1706, or (3) NATEC Customer Service E-mail: nani_customerservice@navy.mil.)

Source: https://assist.dla.mil -- Downloaded: 2016-12-31T21:10Z
Check the source to verify that this is the current version before use.

SAE INTERNATIONAL

SAE AS 85049/138 - Connector Accessories, Electrical, Cap, Dust, Plastic, Category 9.

(Copies of these documents are available on line at www.sae.org from SAE International, 400 Commonwealth Drive, Warrendale, PA 15096-0001, and Tel: 877-606-7323 [inside USA and Canada] or 724-776-4970 [outside USA], email at CustomerService@sae.org.)

2.4 Order of precedence. Unless otherwise noted herein or in the contract, in the event of a conflict between the text of this document and the references cited herein, the text of this document takes precedence. Nothing in this document, however, supersedes applicable laws and regulations unless a specific exemption has been obtained.

3. Definitions.

3.1 Cable bundle, fiber optic. Single fiber cables grouped together and secured by lacing tape. The cable bundle can be placed in convoluted tubing, used in various protected harness configurations or used as is in an open cable harness configuration.

3.2 Cable, fiber optic. A cable that contains optical fibers. The cable may be of a tight buffer or a loose tube design.

3.3 Cabling, fiber optic. Fiber optic cabling is a term used to include single fiber cable, multiple fiber cable, fiber optic cable bundles, and fiber optic cable harnesses. The (optical) fiber is the optical conduit or waveguide transmission media, whereas metallic conductor (wire) is used in an electrical cable. Cable structure is added to make the fibers easier to handle and maintain. The fiber is a thin piece of glass (with a diameter usually around 125 micrometers) that contains and transports the light signals.

3.4 Cable harness, fiber optic. A cable assembly that consists of fiber optic cabling with or without cables run to different breakouts (branches) and with fiber optic connectors at the end of each cable run or segment. The cabling may contain a protective cover (protected cable harness) or remain exposed (open cable harness). Types of protective coverings include convoluted tubing (preferred for a fiber optic application) and braid. The connector is usually a multiple termini connector plug/receptacle and configured with connector accessories such as a backshell for cable strain relief, a backshell for affixing the protective covering to the connector or an EMI retention nut. The type protective covering used must not be one that stresses the cable.

3.5 Cable harness, single sergment (fiber optic). Single fiber harnesses consist of cabling with connectors on each end. Different confgurations for this cable harness may be multiple termini connector cable harnesses (such as plug-to-plug or plug –to-receptacle configurations) and multiple termini plug/receptacle to single fiber connector harnesses.

3.6 Plastic dust cap. A plastic covering with sufficient elasticity to fit over the connector threads of a fiber optic connector receptacle or the coupling ring of a fiber optic connector plug with the intended purpose of keeping out external dust and dirt from migrating to the termini within the connector.

4. Requirements. Fiber optic plastic dust cap shall be standardized for commonality compliance across platforms. Commonality compliance is that which bounds or restricts the parts to those recognized by the Joint Fiber Optic Working Group (JFOWG), cited in the General Series Technical Manual for Fiber Optic Cabling (NAVAIR 01-1A-505-1/T.O. 1-1A-14/TM 1-1500-232-24-4) and, as a result, cited in this Standard Practice.

5. Implementation. Unless otherwise specified by the applicable Platform Office, metal dust covers shall be provided in lieu of plastic dust caps. Where allowed for acquisition or maintenance, plastic dust caps used shall be restricted to those in table 6110 – I and table 6110 – II.

REQUIREMENT 6110

Source: https://assist.dla.mil -- Downloaded: 2016-12-31T21:10Z
Check the source to verify that this is the current version before use.

TABLE 6110 – I. Plastic dust cap sizes for MIL-DTL-38999 Series III connectors. 1/

Item number	Shell size	Plug/ receptacle	Current SAE part number	Superseded SAE part number	Cap ID 3/		Connector interface 2/	Vendor part number 4/
					± .25 mm	± .010 inch		
6110AA	11	Plug	AS85049/138-31A	None	23.62	.930	.984	EC-16
6110AB		Receptacle	AS85049/138-24A	AS90376-12R	18.29	.720	.7485	EC-12
6110AC	13	Plug	AS85049/138-37A	None	28.45	1.120	1.157	EP-20
6110AD		Receptacle	AS85049/138-28A	AS90376-14R	21.59	.850	.8735	EC-14
6110AE	15	Plug	AS85049/138-41A	AS90376-20R	31.27	1.231	1.280	EC-20
6110AF		Receptacle	AS85049/138-33A	AS90376-16R	24.71	.973	.9985	EC-16
6110AG	17	Plug	AS85049/138-46A	None	34.54	1.360	1.406	EP-24
6110AH		Receptacle	AS85049/138-38A	AS90376-20Y	29.21	1.150	1.1855	EP-20
6110AI	19	Plug	AS85049/138-50A	AS90376-24R	37.16	1.463	1.516	EC-24
6110AJ		Receptacle	AS85049/138-41A	AS90376-20R	31.27	1.231	1.2480	EC-20
6110AK	21	Plug	AS85049/13853A	None	40.64	1.600	1.642	EC-26
6110AL		Receptacle	AS85049/138-45A	AS90376-22R	34.04	1.340	1.3730	EC-22
6110AM	23	Plug	AS85049/138-57A	AS90376-28R	43.56	1.715	1.768	EC-28
6110AN		Receptacle	AS85049/138-50A	AS90376-24R	37.16	1.463	1.4980	EC-24
6110AO	25	Plug	AS85049/138-63A	AS90376-32R	48.01	1.890	1.890	EP-32
6110AP		Receptacle	AS85049/138-53A	None	40.64	1.600	1.6230	EC-26

1/ Use as a plastic dust cap only and not as a plug (see note 5/). Used as a plastic dust plug can result in damage to the connector more resilient members.
2/ Dimensions provided in inches. For connector plug, interface is "S dia max" in MIL-DTL 38999/26. For connector receptacle, interface is the thread (in MIL-DTL-38999 for Series III).
3/ Plastic dust cap dimension from SAE AS85049/138.
4/ Part number is for CAGE Code 99017. Part is to be used as a plastic dust cap whether part is specified for use by vendor as an "electrical cap (EC)" or a "SD electrical plug (EP)" (see note 6/). Either the plastic dust cap or the plastic dust plug configuration can be used as a cap (see note 5/).
5/ Plastic dust cap is placed outside the connector shell. Plastic dust plug is placed inside the connector shell.
6/ Designation EC or EP is used to order a regular (not conductive, not ESD protective) dust cap/plug. Designation SEC or SEP is used to order an ESD (ESD protective only) plastic dust cap/plug. The rational to not use the "both conductive and ESD protective CEC/CEP plastic dust cap/plug" in a fiber optic application is addressed in note 7/.
7/ Designation SEC or SEP can be changed to CEC or CEP, respectively, to order both conductive and ESD protective versus the ESD only SEC/SEP plastic dust cap/plug. A CEC/CEP plastic dust cap/plug is not used for fiber optic applications since the carbon does precipitate out of the plastic compound and migrate to the end face of termini.

TABLE 6110 – II. Plastic dust cap sizes to MIL-PRF-64266 connectors. 1/

Item number	Shell size	Plug/ receptacle	Current SAE part number	Superseded SAE part number	Cap ID 2/		Connector interface 3/	Vendor part number 4/
					±.25 mm	± .010 inch		
6110CA	11	Plug	AS85049/138-33A	AS90376-16R	24.71	.973	1.028	EC-16
6110CB		Receptacle	AS85049/138-24A	AS90376-12R	18.29	.720	.7500	EC-12
6110CC	13	Plug	AS85049/138-37A	None	28.45	1.120	1.141	EP-20
6110CD		Receptacle	AS85049/138-28A	AS90376-14R	21.59	.850	.8750	EC-14
6110CE	15	Plug	AS85049/138-41A	AS90376-20R	31.27	1.231	1.263	EC-20
6110CF		Receptacle	AS85049/138-34A	AS90376-18Y	26.11	1.028	1.062	EP-18
6110CG	23	Plug	AS85049/138-55A	AS90376-28Y	41.86	1.648	1.705	EP-28
6110CH		Receptacle	AS85049/138-50A	AS90376-24R	37.16	1.463	1.500	EC-24

See footnotes on next page.

Source: https://assist.dla.mil -- Downloaded: 2016-12-31T21:10Z
Check the source to verify that this is the current version before use.

TABLE 6110 – II. Plastic dust cap sizes to MIL-PRF-64266 connectors – Continued.

1/ Connector shell front end is the same as MIL-PRF-28876 fiber optic multiple termini connector and MIL-DTL-28840 circular, multiple contact, electrical connector.
2/ Plastic dust cap dimension from SAE AS85049/138.
3/ Dimensions provided in inches. For connector plug, interface is “A dia max” for MIL-PRF-64266 and “S dia max” for MIL-DTL-38999/26. For connector receptacle, interface is the thread (the maximum major diameter of BB thread for MIL-DTL-38999 Series III and T thread for MIL-PRF-64266).
4/ Part number is for CAGE Code 99017. Part is to be used as a plastic dust cap whether part is specified for use by vendor as an “electrical cap (EC)” or a “SD electrical plug (EP)” (see note 6/). Either the plastic dust cap or the plastic dust plug configuration can be used as a cap (see note 5/).
5/ Plastic dust cap is placed outside the connector shell. Plastic dust plug is placed inside the connector shell.
6/ EC or EP is used to order a regular (not conductive, not ESD protective) dust cap/plug. Designation SEC or SEP is used to order an ESD (ESD protective only) plastic dust cap/plug. The rational to not use the “both conductive and ESD protective CEC/CEP plastic dust cap/plug” in a fiber optic application is addressed in note 7/.
7/ Designation SEC or SEP can be changed to CEC or CEP, respectively, to order both conductive and ESD protective versus the ESD only SEC/SEP plastic dust cap/plug. A CEC/CEP plastic dust cap/plug is not used for fiber optic applications since the carbon does precipitate out of the plastic compound and migrate to the end face of termini.

6. Notes.

6.1 Intended use. The fiber optic plastic dust cap is intended to be included as part of (1) cable harnesses, and (2) other miscellaneous cabling.

REQUIREMENT 6110

Source: https://assist.dla.mil -- Downloaded: 2016-12-31T21:10Z
Check the source to verify that this is the current version before use.

SUPPORT EQUIPMENT STANDARDIZATION REQUIREMENTS FOR CABLE HARNESS CONFIGURATIONS

(6201 – 6209)

Source: https://assist.dla.mil -- Downloaded: 2016-12-31T21:10Z
Check the source to verify that this is the current version before use.

FERRULE END FACE CONSUMABLE CLEANING SUPPLIES AND EQUIPMENT.

1. Purpose. This requirement refines or bounds (constrains) the selection of the fiber optic support equipment (SE) consisting of consumable cleaning supplies and equipment that are used to clean the ferrule end faces of fiber optic termini and single ferrule connectors. Included in these supplies and equipment are cleaning cloths, swabs and solvents. This requirement is intended for developmental, prototype, production, rework and modification programs on military platform fiber optic cable assemblies.

1.1 Supplemental, cleaning equipment (consumable cleaning supplies). The number one cause for an increased optical loss is dirt. No single cleaning method has been found to date that will guarantee a clean end face on the ferrule. Visual inspection together with manual cleaning equipment (consumable cleaning supplies) is important when practical. Recommended cleaning supplies are listed in this appendix. Visual inspection may be done using a Fiber Optic Video Inspection System or FOVIS (see Requirement 6202). Powered cleaning equipment for aircraft applications is under development (via the SBIR process) and will be addressed once available.

2. Applicable documents.

2.1 General. The documents listed in this section are specified in sections 3, 4, and 5 of this standard practice. This section does not include documents cited in other sections of this standard practice or recommended for additional information or as examples. While every effort has been made to ensure the completeness of this list, document users are cautioned that they must meet all specified requirements of documents cited in sections 3, 4, and 5 of this standard practice, whether or not they are listed.

2.2 Government documents.

2.2.1 Specifications, standards and handbooks. The following specifications, standards, and handbooks form a part of this document to the extent specified herein. Unless otherwise specified, the issues of these documents are those cited in the solicitation or contract.

FEDERAL SPECIFICATION

TT-I-735 - Isopropyl Alcohol.

DEPARTMENT OF DEFENSE SPECIFICATION

MIL-PRF-29504- Termini, Fiber Optic Connector, Removable, General Specification for.

(Copies of these documents are available online at http://quicksearch.dla.mil or from the Standardization Document Order Desk, 700 Robbins Avenue, Building 4D, Philadelphia, PA 19111-5094.)

2.3 Other Government documents, drawings, and publications. The following other Government documents, drawings, and publications form a part of this standard practice to the extent specified herein. Unless otherwise specified, the issues are these documents are those cited in the solicitation or contract.

NAVAIR 01-1A-505-4/ T.O. 1-1A-14-4/TM1-1500-232-24-4- Installation and Testing Practices Aircraft Fiber Optic Cabling

(A copy of this document is available online at: https://mynatec.navair.navy.mil. NATEC has three different processes to obtain the manual, depending on if you are Government personnel (military and civilians), Contractors with a Government contract, or everyone else. If unable to access this Web Site or require further assistance, contact (1) NATEC Customer Service: 619.545.1888, (2) NATEC Website Status Hotline: 619.545.1706, or (3) NATEC Customer Service E-mail: nani_customerservice@navy.mil.)

Source: https://assist.dla.mil -- Downloaded: 2016-12-31T21:10Z
Check the source to verify that this is the current version before use.

2.4 Non-Government publications. The following documents form a part of this document to the extent specified herein. Unless otherwise specified, the issues of these documents are cited in the solicitation or contract.

NATIONAL AEROSPACE FOD PREVENTION, INC (NAPFI)

FOD Prevention Guideline (covering both Foreign Object Damage and Foreign Object Debris).

(Copies are available online at http://www.nafpi.com or from National Aerospace FOD Prevention, Inc., at 15731 Brayton Street, Paramount, CA 90723) or by phone at (800) 363-1211.

2.5 Order of precedence. Unless otherwise noted herein or in the contract, in the event of a conflict between the text of this document and the references cited herein, the text of this document takes precedence. Nothing in this document, however, supersedes applicable laws and regulations unless a specific exemption has been obtained.

3. Definitions.

3.1 Cleaning cloth. A lint-free pad used to wipe the ferrule end face. This pad can be used dry or moistened with a solvent (such as reagent grade isopropyl alcohol).

3.2 Swab. A stick containing a lint-free, particulate and fluid absorbing pad on one or both ends and used to clean the ferrule end faces of fiber optic connectors and termini.

4. Requirements. Fiber optic ferrule end face consumable cleaning supplies and equipment will be standardized for commonality compliance across platforms. Commonality compliance is that which bounds or restricts the support equipment to those recognized by the Joint Fiber Optic Working Group (JFOWG), cited in the General Series Technical Manual for Fiber Optic Cabling (NAVAIR 01-1A-505-1/T.O. 1-1A-14/TM 1-1500-232-24-4) and, as a result, cited in this Standard Practice.

5. Implementation. Unless otherwise specified by the applicable Platform Office, fiber optic ferrule end face consumable cleaning supplies and equipment used shall be restricted to those in table 6201 – I and table 6201 – II, respectively. These fiber optic ferrule end face consumable cleaning supplies and equipment are used on connectors and termini that are a part of a fiber optic cable harness, those to transition to end user equipment interfacing with the cable harness, and those on patch cords.

REQUIREMENT 6201

Source: https://assist.dla.mil -- Downloaded: 2016-12-31T21:10Z
Check the source to verify that this is the current version before use.

TABLE 6201 – I. Standard connector cleaning supplies.

Item number	Description	Quantity	CAGE code	Part number
6201AA	Canned air (canned liquefied gas) NSN: 6838 01 428 8839	N/A	21267	ES1220
			09ZF6	3507
6201AB	Cloth cleaning, white NSN: 7920 01 321 6791	N/A	21994	TX404
			54700	Tech 2351-100
			08RC6	0700-5200
6201AC	Alcohol, Isopropyl, 99 percent pure anhydrous NSN: 6505 00 205 6513 1/	N/A	61757	NDC00395-1243-16
			08RC6	0700-5150
6201AD	Dispenser, solvent 4 oz., leak proof (for alcohol) NSN: 8125 01 439 5367	N/A	33092	3714
			08RC6	0700-9750
6201AE	Cleaning swab, 1.25 mm (.05 inch) exposed tip 2/	10	54700	2316-10
		40	0NL21	CCTS-12-0900MZ 3/
		N/A	K1479	14100401
		10	0ATV9	MCC-S12 4/
6201AF	Cleaning swab, 2.5 mm (.10 inch) exposed tip	10	54700	2317-10
		40	0NL21	CCTS-25-0900MZ 5/
		N/A	K1479	14100400
		10	0ATV9	MCC-S25 6/
6201AG	Isopropyl alcohol, pre-saturated cloths in packets NSN: 6810-01-414-6659 1/, 7/	N/A	54700	1610-50PK
			08RC6	0700-9765
6201AH	Foreign Object Debris (FOD) pouch 8/, 9/	6	08RC6	0400-3020
6201AI	Cleaning swab, extended exposed tip 10/	10	0ATV9	MCC-S16 11/
			0NL21	CCTS-16-0902MZ
6201AJ	Cleaning tool, push advance cloth ribbon cartridge, tip for use with 1.58 mm ferrule and for insertion thru a Glenair test probe adapter to a 1.58 mm ferrule (M29504/4 and /5 termini)	1	1WEB4	14829
6201AK	Cleaning tool, push advance cloth ribbon cartridge, tip for use with 1.25 mm ferrule and for insertion thru a MIL-PRF-64266 test terminus adapter to a 1.25 mm ferrule (M29504/18 & /20 termini)	1	1WEB4	14649

1/ Alternate sources of isopropyl alcohol (also known as IPA) must be of a high purity (> 99 percent, i.e., reagent grade or equivalent). TT-I-735 Grade A isopropyl alcohol may be used in lieu of item number 6102AC or 6102AG.
2/ Use 1.25 mm (.06 inch) cleaning swabs for MIL-PRF-29504 termini (1.58 (.06 inch) and 2.0 mm (.08 inch) ferule diameters).
3/ NSN is 5120-01-553-6822 for this part number. Swab is dual tipped (cleaning tip on each end for wet then dry cleaning using one swab).
4/ NSN is 6070-01-553-2267 for this part number.
5/ NSN is 5120-01-535-6256 for this part number. Swab is dual tipped (cleaning tip on each end for wet then dry cleaning using one swab).
6/ NSN is 6070-01-553-2263 for this part number.
7/ Individual, pre-saturated, isopropyl alcohol packets can be obtained under NSN 6510-01-543-5190 versus a box of 50.
8/ A copy of the National Aerospace FOD Prevention, Inc. (NAFPI) FOD Prevention Guideline (covering both Foreign Object Damage and Foreign Object Debris) can be obtained by contacting 1-800-FOD-1211.
9/ FOD containers, including belt pouches, rectangular bags, and tool buckets are available commercially. One source of supply can be found at web site: www.estexmfg.com.
10/ This swab has an extra-long (extended) cleaning tip to allow tip penetration through a connector probe adapter to reach and clean the terminus end face. Cleaning swab specified for 1.58 (.06 inch) and 2.0 mm (.08 inch) diameter ferrules, so may not be able to use with 1.25 mm (.05 inch) diameter ferrule connectors.
11/ NSN is 6070-01-553-2262 for this part.

REQUIREMENT 6201

Source: https://assist.dla.mil -- Downloaded: 2016-12-31T21:10Z
Check the source to verify that this is the current version before use.

TABLE 6201 – II. Supplemental cleaning supplies.

Item number	Description	Quantity	CAGE code	Part number
6201CA	Connector cleaning tape cassette	N/A	0XY53	945
6201CB	Replacement cleaning tape	N/A	0XY53	945/1
6201CF	Canned air (canned liquefied gas) NSN: 6850-01-346-9144	N/A	18598	MS222N

6. Notes.

6.1 Intended use. On these platforms, the fiber optic ferrule end face consumable cleaning supplies and equipment are intended to be used for cleaning connectors and termini that are a part of (1) cable harnesses, (2) equipment (electronic module/package) such as a(n) ATR, LRC, LRM, LRU or WRA with internal fiber optics, (3) circuit card modules and assemblies with internal fiber optics, (4) fiber optic test jumpers, and (5) other miscellaneous cabling.

Source: https://assist.dla.mil -- Downloaded: 2016-12-31T21:10Z
Check the source to verify that this is the current version before use.

FERRULE END FACE INSPECTION EQUIPMENT

1. Purpose. This requirement refines or bounds (constrains) the selection of the fiber optic support equipment (SE) consisting of video (camera) equipment that is used to inspect the ferrule end faces of fiber optic termini and single ferrule connectors. Included with this Fiber Optic Video Inspection System (FOVIS) are the probe tips needed to adap to each different ferrule diameter and length. This requirement is intended for developmental, prototype, production, rework and modification programs on military platform fiber optic cable assemblies.

1.1 Supplemental, ferrule end face inspection using a Fiber Optic Video Inspection System (FOVIS). The FOVIS can view the optical fiber on the ferrule end face of a connector or terminus. Different adapters are provided to allow viewing for different ferrule diameters and for connectors behind various bulkhead adapters. This system consists of a probe (camera with probe tip), display (that also houses a rechargeable battery) and interconnecting cabling. The magnification for the FOVIS in this Test Kit allows for "General Inspection". The General Inspection mode allows for a larger field of view and smaller fiber image size (displaying a larger area of the ferrule) and is capable of viewing a fiber end-face that is either accessible or that is within an alignment sleeve (either inside a receptacle or a bulkhead adapter).

2. Applicable documents.

2.1 General. The documents listed in this section are specified in sections 3, 4, and 5 of this standard practice. This section does not include documents cited in other sections of this standard practice or recommended for additional information or as examples. While every effort has been made to ensure the completeness of this list, document users are cautioned that they must meet all specified requirements of documents cited in sections 3, 4, and 5 of this standard practice, whether or not they are listed.

2.2 Government documents.

2.2.1 Specifications, standards,q and handbooks. The following specifications, standards, and handbooks form a part of this document to the extent specified herein. Unless otherwise specified, the issues of these documents are those cited in the solicitation or contract.

DEPARTMENT OF DEFENSE SPECIFICATION

MIL-PRF-28800 - Test equipment for use with electrical and electronic equipment, general specification for

DEPARTMENT OF DEFENSE STANDARD

MIL-STD-461 - Requirements for the Control of Electromagnetic Interference Characteristics of Subsystems and Equipment.

(Copies of these documents are available online at http://quicksearch.dla.mil or from the Standardization Document Order Desk, 700 Robbins Avenue, Building 4D, Philadelphia, PA 19111-5094.)

Source: https://assist.dla.mil -- Downloaded: 2016-12-31T21:10Z
Check the source to verify that this is the current version before use.

2.3 Other Government documents, drawings, and publications. The following other Government documents, drawings, and publications form a part of this standard practice to the extent specified herein. Unless otherwise specified, the issues are these documents are those cited in the solicitation or contract.

NAVAIR 01-1A-505-4/ T.O. 1-1A-14-4/TM 1-1500-232-24-4- Installation and Testing Practices, Aircraft Fiber Optic Cabling.

(A copy of this document is available online at: https://mynatec.navair.navy.mil. NATEC has three different processes to obtain the manual, depending on if you are Government personnel (military and civilians), Contractors with a Government contract, or everyone else. If unable to access this Web Site or require further assistance, contact (1) NATEC Customer Service: 619.545.1888, (2) NATEC Website Status Hotline: 619.545.1706, or (3) NATEC Customer Service E-mail: nani_customerservice@navy.mil.)

2.4 Order of precedence. Unless otherwise noted herein or in the contract, in the event of a conflict between the text of this document and the references cited herein, the text of this document takes precedence. Nothing in this document, however, supersedes applicable laws and regulations unless a specific exemption has been obtained.

3. Definitions.

3.1 Fiber Optic Video Inspection System (FOVIS). Support equipment used to inspect the ferrule end face of single ferrule connectors, fiber optic termini, connectors behind bulkhead adapters, and fiber optic interface ports. The FOVIS consists of a probe (camera with probe tip), display (that also houses a rechargeable battery) and interconnecting cabling. Single or dual magnification allows for general or for a closer fiber inspection.

3.2 Fiber inspection. A higher magnification (approximate equivalent to 400X on an optical microscope) is used to view the end face for fiber imperfections. A smaller area of the ferrule is displayed (smaller field of view) with the resulting larger fiber image size.

3.3 General inspection. A lower magnification (approximate equivalent to 200X on an optical microscope) is used to view the end face for cleanliness. A larger area of the ferrule is displayed (larger field of view) with the resulting smaller fiber image size.

4. Requirements. Fiber optic support equipment (SE) for the Fiber Optic Video Inspection System (FOVIS) shall be standardized for commonality compliance across platforms. Commonality compliance is that which bounds or restricts the support equipment to those recognized by the Joint Fiber Optic Working Group (JFOWG), cited in the General Series Technical Manual for Fiber Optic Cabling (NAVAIR 01-1A-505-1/T.O. 1-1A-14/TM 1-1500-232-24-4) and, as a result, cited in this Standard Practice.

5. Implementation. Unless otherwise specified by the applicable Platform Office, Fiber Optic Video Inspection System (FOVIS) used shall be restricted to those in table 6201 – I through table 6202 – IV.

REQUIREMENT 6202

Source: https://assist.dla.mil -- Downloaded: 2016-12-31T21:10Z
Check the source to verify that this is the current version before use.

TABLE 6202 – I. Fiber Optic Inspection System (FOIS) hardened aircraft support equipment.

Item	Description 1/, 2/, 3/	Quantity	CAGE code	Part number
6202AA	Set of fiber optic inspection equipment and accessories and visual fault locator, hardened for Navy / Marine Corp environment in water / dust, tight case and anti-FOD containment system for probe tips NSN 6070-01-577-1018 (kit includes items below) 4/	1	3PWC3	4007AS100-1
6202BA	Hand-held video display 63.5 mm (2.5 inch) 5/		1QLU8	FBP-HD1-H
6202CA	FOVIS Probe (200X and 400X, no barrel adapter, no probe tips) 5/		1QLU8	FBP-P5-H
6202DA	Barrel Adapter (standard)9/		1QLU8	FBPP-BAP1
6202DB	Probe tip, for M29504/4 pin terminus 6/ NSN 6625-01-530-7055		1QLU8	FBPT-MIL-2P
6202DC	Probe tip, for M29504/5 socket terminus NSN 6625-01-530-7053		1QLU8	FBPT-MIL-2S
6202DD	Probe tip, for M29054/4 and M29504/5 60 degree angle 7/, 8/ NSN 5999-01-540-7525		1QLU8	FBPT-MIL2-A6
6202DE	Probe tip, for 1.25 mm (.05 inch) dia. ferrule NSN 5999-01-540-7508		1QLU8	FBPT-U12M
6202DF	Probe tip, for 2.5 mm (.10 inch) dia. ferrule NSN 5999-01-540-7516		1QLU8	FBPT-U25M
6202DG	Probe tip, adapter, view through M38999 test probe adapter, 1.63 mm (.064 inch) bore		1QLU8	FBPT-MIL-2CPA
6202DH	Probe tip, bulkhead adapter, view thru LC-to-LC adapter NSN 5999-01-559-0254		1QLU8	FBPT-LC
6202DI	Probe tip, bulkhead adapter, view thru ST-to-ST adapter NSN 6080-01-540-7505		1QLU8	FBPT-ST
6202DJ	Probe tip, bulkhead adapter, view thru FC-to-FC adapter NSN 5999-01-540-7521		1QLU8	FBPT-FC
6202DK	Probe tip, for M29504/4 pin terminus, with 1.63 mm (.064 inch) bore		1QLU8	FBPT-MIL-2P-X
6202EA	Case, custom, for table 6202 - I items (see supplemental information) 2/			
6203FA	Visual Fault Locator (VFL) with 2.5mm (.10 inch) ferrule adapter		1QLU8	FFL-050
6203FC	Adapter cable, 2.5 mm-to-1.58 mm, (.10 inch to .06 inch) for FFL-050		0XY53	F23K-106-01F
6201AJ	Cleaning tool, push advance cloth ribbon cartridge, tip for insertion thru a connector probe adapter to a 1.58 mm ferrule (M29504/4 and M29504/5 termini)		1WEB4	13309

See footnotes on next page.

Source: https://assist.dla.mil -- Downloaded: 2016-12-31T21:10Z
Check the source to verify that this is the current version before use.

TABLE 6202 – I. Fiber Optic Inspection System (FOIS) hardened aircraft support equipment – Continued.

1/ Other potentially needed probe tips are listed in table 6202 – IV.

2/ Requirements for custom case listed under supplemental information below.
3/ Probe tips come in different configurations. In one of the configurations, the probe tip is inserted directly onto the ferrule of the connector or terminus. This configuration is sometimes referred to as a "patch cord probe tip" as one of the applications inspected is patch cords. One exception to this configuration probe tip is for a socket terminus. The probe tip is placed onto the surface of the connector insert cavity or socket terminus alignment sleeve. A second configuration is referred to as a "bulkhead adapter probe tip". This second configuration probe tip is one that is placed into a connector adapter (such as an ST-to-ST adapter), a connector (test) probe adapter, or the equivalent interface port (such as the equipment LC connector interface port).
4/ This kit less the custom case can be obtained from CAGE Code 1QLU8 under part number FBP-NAV-H1.
5/ Militarized for high EMI environment in accordance with MIL-STD-461 and other tailored environmental compliance with MIL-PRF-28800.
6/ This probe tip can be used to inspect the M38999 connector test probe also (M38999 connector test probe is used with the M38999 connector test probe adapter).
7/ This probe tip is used without the standard barrel adapter on the video inspection probe.
8/ Probe tip comes with a cap or extension with affixed lanyard that is placed on the probe tip for viewing a pin terminus and taken off for viewing a socket terminus.
9/ Standard barrel adapter. This component contains lenses for the video inspection probe and is the barrel adapter used with the probe tips in this table (except those identified by note 7/).

TABLE 6202 – II. Fiber Optic Video Inspection System (FOVIS) field user kit.

Item number	Description 5/	Quantity	CAGE code	Part number
6202HA	Video Inspection System Kit w/ probe tips, w/o case, w/ standard barrel adapter (kit includes items below) 1/	1	1QLU8	FBP-NAV-2A
6202HB	200X Video inspection probe, no tips or display, with standard barrel adapter 1/		1QLU8	FBP-P1
6202HC	6.35 mm (2.5 inch) hand held video display NSN 6080-01-540-7515		1QLU8	FBP-HD1
6202DB	…..Probe tip, for M29504/4 pin terminus 2/ NSN 6625-01-530-7055		1QLU8	FBPT-MIL-2P
6202DC	…..Probe tip, for M29504/5 socket terminus NSN 6625-01-530-7053		1QLU8	FBPT-MIL-2S
6202DE	…..Probe tip, for 1.25 mm (.05 inch) dia. Ferrule NSN 5999-01-540-7508		1QLU8	FBPT-U12M
6202DF	…..Probe tip, for 2.5 mm (.10 inch) dia. Ferrule NSN 5999-01-540-7516		1QLU8	FBPT-U25M
6202DG	Probe tip, bulkhead adapter, view thru M38999 test probe adapter, 1.63 mm (.064 inch) bore 3/, 4/		1QLU8	FBPT-MIL-2CPA
6202DH	Probe tip, bulkhead adapter, view thru LC-to-LC adapter NSN 5999-01-559-0254		1QLU8	FBPT-LC

1/ Not militarized for high EMI environment per MIL-STD-461 and other tailored environmental compliance with MIL-PRF-28800.
2/ This probe tip can be used to inspect the M38999 connector (test) probe also (M38999 connector(test)probe is used with the M38999 connector(test) probe adapter).
3/ Probe tip comes with a cap or extension with affixed lanyard that is placed on the probe tip for viewing a pin terminus and taken off for viewing a socket terminus.
4/ This probe tip is used without the standard barrel adapter on the video inspection probe.
5/ Probe tips come in different configurations. In one of the configureatins, the probe tip isinserted directly onto the ferrule of the connector or terminus. This configuration is somes referred to as a "patch cord probe tip" as one of the applications inspected is patch cords. One exception to this configuration probe tip is for a socket terminus. The probe tip is placed onto the surface of the connector insert cavity or socket terminus alignment sleeve. A second configuration probe tip is one that is placed into a connector adapter (such as an ST-to-ST adapter), a connector (test) probe adapter, or the equivalent interface port (such as the equipment LC connector interface port).

REQUIREMENT 6202

Source: https://assist.dla.mil -- Downloaded: 2016-12-31T21:10Z
Check the source to verify that this is the current version before use.

TABLE 6202 – III. Fiber Optic Video Inspection System (FOVIS) engineering support kit.

Item	Description 3/, 4/, 5/	Quantity	CAGE code	Part number
6202JA	Video Inspection System Kit w/ probe tips w/o case (kit includes USB connected video inspection probe, probe tips/adapters and software listed in remainder of this table) 1/, 2/	1	1QLU8	FBP-NAV-H2
6202JB	Video inspection probe, hardened, USB connection; Software, inspect, capture, WP 008 01 pass/fail criteria, DoD build (with no probe tips, with standard barrel adapter, with FBPT-U25M 2.5 mm (.10 inch) universal probe tip) 1/, 2/		1QLU8	FBP-SD01-NAV
6202DB	…..Probe tip, for M29504/4 pin terminus NSN 6625-01-530-7055		1QLU8	FBPT-MIL-2P
6202DC	…..Probe tip, for M29504/5 socket terminus NSN 6625-01-530-7053		1QLU8	FBPT-MIL-2S
6202DD	Probe tip, for M29054/4 and M29054/5 60 degree angle NSN 5999-01-540-7525 6/, 7/		1QLU8	FBPT-MIL2-A6
6202DF	Probe tip, for 1.25 mm (.05 inch) dia. Ferrule NSN 5999-01-540-7516		1QLU8	FBPT-U12M
6202DG	Probe tip, bulkhead adapter, view thru M38999 test probe adapter, 1.63 mm (.064 inch) bore 7/, 8/		1QLU8	FBPT-MIL-2CPA
6202DH	Probe tip, bulkhead adapter, view thru LC-to-LC adapter NSN 5999-01-559-0254		1QLU8	FBPT-LC
6202JC	Case, compact, soft, zipper, for video inspection probe 9/		1QLU8	ZP-FM-0055

1/ Not militarized for high EMI environment in accordance with MIL-STD-461 and other tailored environmental compliance with MIL-PRF-28800.

2/ Commercial video inspection probe that is available for sale.

3/ Other potentially needed probe tips are listed in table 6202 – IV.

4/ Probe tips come in different configurations. In one of the configurations, the probe tip is inserted directly onto the ferrule of the connector or terminus. This configuration is sometimes referred to as a "patch cord probe tip" as one of the apllications inspected is patch cords. One exception to this configuration probe tip is for a socket terminus. The probe tip is placed onto the surface of the connector insert cavity or socket terminus alignment sleeve. A second configuration is placed into a connector adapter (such as an ST-to-ST adapter), a connector (test) probe adapter or the equivalent interface port (such as the equipment LC connector interface port).

5/ Standard barrel adapter. This component contains lenses for the video inspection probe and is the barrel adapter used with the probe tips in this table (except those identified by note 7/).

6/ Probe tip comes with a cap or extension with affixed lanyard that is placed on the probe tip for viewing a pin terminus and taken off for viewing a socket terminus

7/ This probe tip is used without the standard barrel adapter on the video inspection probe.

8/ This probe tip can be used to inspect the M38999 connector test probe also (M38999 connector test probe is used with the M38999 connector test probe adapter).

9/ Double zippered pouch. Dimensions are about 190.5 mm x 101.6 mm x 50.8 mm (7.5 inch x 4 inch x 2 inch). On the front (length wise) is printed "Fiber Microscope. The interior contains a pocket (able to holder a few tips, or more) with a Velcro fastener. The exterior has a cloth handle on the bottom (length wise) and a cloth belt holder on the back (length wise).

REQUIREMENT 6202

Source: https://assist.dla.mil -- Downloaded: 2016-12-31T21:10Z
Check the source to verify that this is the current version before use.

TABLE 6202 – IV. Fiber Optic Video Inspection System (FOVIS) other potentially needed probe tips.

Item	Description 1/	Quantity	CAGE code	Part number
6202LA	Probe tip, patch cord, M29504/18, /20 terminus, pin config 2/		1QLU8	FBPT-U12M-N
6202LB	Probe tip, bulkhead adapter, M29504/18, /20 terminus, view thru M64266 ASR		1QLU8	FBPT-MIL-3S
6202LC	Probe tip for M29054/18, /20 60° angle3/, 4/		1QLU8	FBPT-MIL3-A6
6202LD	Barrel Adapter (standard)		1QLU8	FBPP-BAP1
6202LE	Barrel Adapter (narrow) 2/		1QLU8	FBPP-BAP3
6202LF	Probe tip, for 1.25 mm (.05 inch) dia. ferrule (narrow) 2/		1QLU8	FBPT-U12M-N
6202LG	Probe tip, for 2.5 mm (.10 inch) dia. ferrule (narrow)		1QLU8	FBPT-U25M-N
6202LH	Probe tip, bulkhead adapter, view thru ST-to-ST adapter NSN 6080-01-540-7505		1QLU8	FBPT-ST
6202LI	Probe tip, bulkhead adapter, view thru SC-to-SC adapter		1QLU8	FBPT-SC
6202LJ	Probe tip, bulkhead adapter, view thru FC-to-FC adapter		1QLU8	FBPT-FC
6202LK	Probe tip, patch cord, M29504/18, /20 terminus, pin config, APC polish		1QLU8	FBPT-U12MX

1/ Probe tips come in different configurations. In one of the configurations, the probe tip is inserted directly onto the ferrule of the connector or terminus. This configuration is sometimes referred to as a "patch cord probe tipe" as one of the applications inspected is patch cords. One exception to this configuration probe tip is for a socket terminus. The probe tip is placed onto the surface of the connector insert cavity or socket terminus alignment sleeve. A second configuration is referred to as a "bulkhead adapter probe tip". This second configuration probe tip is one that is placed into a connector adapter (such as an ST-to-ST adapter), a connector (test) probe adapter, or the equivalent interface port (such as the equipment LC connector interface port).

2/ Narrow barrel adapter. When used in conjunction with selected probe tips, the narrow versus standard barrel adapter must be mounted on the video inspection probe.

3/ Probe tip comes with a cap or extension with affixed lanyard that is placed on the probe tip for viewing a pin terminus and taken off for viewing through the ASR.

4/ This probe tip is used without the standard barrel adapter on the video inspection probe.

6. Notes.

6.1 Intended use. On these platforms, the fiber optic Fiber Optic Video Inspection System (FOVIS) is intended to be used to inspect the connectors and termini ferrule end faces on (1) cable harnesses, (2) equipment (electronic module/package) such as a(n) ATR, LRC, LRM, LRU or WRA with internal fiber optics, (3) circuit card modules and assemblies with internal fiber optics, (4) fiber optic test jumpers, and (5) other miscellaneous cabling.

Source: https://assist.dla.mil -- Downloaded: 2016-12-31T21:10Z
Check the source to verify that this is the current version before use.

TEST AND TROUBLESHOOTING EQUIPMENT

1. Purpose. This requirement refines or bounds (constrains) the selection of the fiber optic support equipment (SE) for test and for troubleshooting fiber optic cable harnesses and other fiber optic cabling configurations. Included in this fiber optic test and troubleshooting equipment are optical sources, an optical power meter, visual fault finder, and retention clip seating tester. This requirement is intended for developmental, prototype, production, rework and modification programs on military platform fiber optic cable assemblies.

1.1 Supplemental, test and troubleshooting equipment. This requirement defines the test equipment and accessories needed to test a fiber optic cable topology with single mode (such as 5.8/125, 7.5/125 or 9/125 micron optical fiber) and with multimode (such as 50/125, 62.5/125 or 100/140 micron) optical fiber. The fiber optic components in this cable topology include the fiber optic cable, connectors (both single ferrule and multiple termini types). Equipment covered in this requirement is for the optical loss test and for a visually observed, fault illumination test. Low loss jumpers, referred to as MQJ or Measurement Quality Jumpers herein, and other supplemental items required for the optical loss measurement, such as any interconnecting adapters, are addressed in Requirement 6205 and Requirement 6207. Optical loss measurements are performed on the various configurations of fiber optic cable topology to verify optical performance of the installed cable. The various fiber optic cable topologies include fiber optical links (general term for cable assemblies), harnesses (usually multiple termini connector plug-to-plug cable assemblies) and pigtail assemblies (multiple termini receptacle-to-single fiber cables ending with single terminus connectors).

1.1.1 Test equipment, optical source and power meter. The optical source is used to launch optical power (light) into an optical link. The power meter (optical detector) is used to measure the amount of optical power coupled out of the optical link. This listing has both ST connector and FC connector interface adapters for the optical source and the power meter. The optical source for multimode fiber sizes has an LED (Light Emitting Diode) that emits light at the 850 nm and 1300 nm wavelengths. The optical source for single mode fiber sizes has an LD (Laser Diode) that emits light at the 1310 nm and 1550 nm wavelengths.

1.1.2 Test equipment, optical source wavelength. For aircraft designated components, the following optical source wavelength guidance is provided where Platform specific information is not provided. Test fiber optic components using an optical source at the wavelength of operation. If the operating wavelength is unknown, then test single mode, fiber optic components using optical sources at both the 1310 nm and the 1550 nm wavelengths. Multimode fiber optic components can be tested using an optical source at either the 850 nm or the 1300 nm wavelength. Current preference is to use the 850 nm wavelength. For single mode, a different loss mechanism dominates each window. Connection losses are greater at the 1310 nm wavelength. Microbend sensitivity losses dominate the 1550 nm wavelength. For multimode, difference in loss at the 850 nm and 1300 nm wavelength are cable length dependent. This loss is greater at the 850 nm wavelength.

1.1.3 Troubleshooting equipment, visual fault finder. The visual fault finder is a 630 nm (visible light) wavelength LD (laser diode) light source (Class 2 with a maximum power level of 1 mW). Visible light is seen at breaks near the ferrule and inside some type cable jackets. The visual fault finder is packaged in a flashlight configuration and contains two to three AAA or AA batteries for 40 to 80 hours of continuous use.

1.1.4 Troubleshooting equipment, retention clip seating tester. A retention clip seating tester is used to verify that a fiber optic terminus is seated within the retention clip (contact retainer clip) of a multiple termini connector (such as the MIL-DTL-38999 Series III and MIL-PRF-64266 connectors). If a “click” is heard, then it is assumed that the terminus is “locked” into place. This may not be the case. For instance, each cavity in a MIL-DTL-38999 connector insert has a retention clip. Each retention clip has at least two fingers. If a fiber optic terminus is not inserted completely, the fingers may not lock onto the terminus shoulder (i.e., the smaller diameter below the shoulder). The fingers of the retention clip remains sitting on top of the shoulder (i.e. the larger diameter of the terminus shoulder). When mated, the action of the two termini contacting can push back on the unlocked terminus.

1.1.5 Ferrule length gauge. A ferrule length gauge is used to verify that a sufficient protrusion length remains within the fiber optic terminus once the ferrule end face is refuribished.

Source: https://assist.dla.mil -- Downloaded: 2016-12-31T21:10Z
Check the source to verify that this is the current version before use.

2. Applicable documents.

2.1 General. The documents listed in this section are specified in sections 3, 4, and 5 of this standard practice. This section does not include documents cited in other sections of this standard practice or recommended for additional information or as examples. While every effort has been made to ensure the completeness of this list, document users are cautioned that they must meet all specified requirements of documents cited in sections 3, 4, and 5 of this standard practice, whether or not they are listed.

2.2 Government documents.

2.2.1 Specifications, standards,q and handbooks. The following specifications, standards, and handbooks form a part of this document to the extent specified herein. Unless otherwise specified, the issues of these documents are those cited in the solicitation or contract.

DEPARTMENT OF DEFENSE SPECIFICATION

MIL-PRF-28800 - Test equipment for use with electrical and electronic equipment, general specification for

DEPARTMENT OF DEFENSE STANDARD

MIL-STD-461 - Requirements for the Control of Electromagnetic Interference Characteristics of Subsystems and Equipment.

(Copies of these documents are available online at http://quicksearch.dla.mil or from the Standardization Document Order Desk, 700 Robbins Avenue, Building 4D, Philadelphia, PA 19111-5094.)

2.3 Other Government documents, drawings, and publications. The following other Government documents, drawings, and publications form a part of this standard practice to the extent specified herein. Unless otherwise specified, the issues are these documents are those cited in the solicitation or contract.

NAVAIR 01-1A-505-4/ T.O. 1-1A-14-4/TM1-1500-232-24-4- Installation and Testing Practices Aircraft Fiber Optic Cabling

(A copy of this document is available online at: https://mynatec.navair.navy.mil. NATEC has three different processes to obtain the manual, depending on if you are Government personnel (military and civilians), Contractors with a Government contract, or everyone else. If unable to access this Web Site or require further assistance, contact (1) NATEC Customer Service: 619.545.1888, (2) NATEC Website Status Hotline: 619.545.1706, or (3) NATEC Customer Service E-mail: nani_customerservice@navy.mil.).

2.4 Order of precedence. Unless otherwise noted herein or in the contract, in the event of a conflict between the text of this document and the references cited herein, the text of this document takes precedence. Nothing in this document, however, supersedes applicable laws and regulations unless a specific exemption has been obtained.

3. Definitions.

3.1 Optical source (fiber optic light source). A device that emits radiation in or near the visible region of the electromagnetic spectrum, for example, light-emitting diodes (LED), laser diodes (LD), and lamps (broad spectrum), for providing optical power to optical measurement system/instrumentation.

REQUIREMENT 6203

Source: https://assist.dla.mil -- Downloaded: 2016-12-31T21:10Z
Check the source to verify that this is the current version before use.

3.2 Power meter (fiber optic detector or photo-detector). An optoelectronic device that accepts optical signals from an optical source through the propagation medium (including fiber optic cabling and the DUT or Device Under Test), detects them by converting them into electronic signals (through a light-sensitive element, such as a photodiode), amplifies, and further processes the electrical signal into units of measure of optical power in Watts (i.e., nano-Watts or micro-Watts) or power ratio in dB or dBm.

4. Requirements. Fiber optic support equipment (SE) for fiber optic cabling test and troubleshooting shall be standardized for commonality compliance across platforms. Commonality compliance is that which bounds or restricts the support equipment to those recognized by the Joint Fiber Optic Working Group (JFOWG), cited in the General Series Technical Manual for Fiber Optic Cabling (NAVAIR 01-1A-505-1/T.O. 1-1A-14/TM 1-1500-232-24-4) and, as a result, cited in this Standard Practice.

TABLE 6203 – I. Optical loss test equipment. 1/, 2/, 3/, 4/.

Item	Description	Quantity	CAGE code	Part number
	OPTICAL SOURCE SELECTIONS, MULTIMODE			
6203AA	Optical source (LED, 850 nm and 1,300 nm, full fill) 1/, 4/ Formally model number 252A-AS100-EMI.	1	0XY53	570XL-AS100-EMI
6203AB	Optical source (LED, 850 nm, full fill) 2/ Formally model number 257A-AS100.	1	0XY53	577XL-AS100
	OPTICAL SOURCE SELECTIONS, SINGLE MODE			
6203BA	Optical source (LD, 1,310 and 1550 nm) 1/ Formerly model number 266A-EMI.	1	0XY53	580XL-EMI
6203BB	Optical source (LD, 1,310 nm and 1,550 nm) 2/ Formally model number 262A.	1	0XY53	580XL-xx 3/
	ADAPTER SELECTION FOR OPTICAL SOURCES			
6203CA	FC adapter (narrow key, phosphor bronze alignment sleeve)	1	0XY53	APC-109
6203CB	ST adapter	1	0XY53	ATS-108
6203CC	Adapter, MIL-PRF-29504/4 and MIL-PRF-29504/5	1	0XY53	AML-38
	OPTICAL POWER METER SELECTIONS			
6203DA	Optical power meter (+3 to -60 dBm,1 mm (.04 inch) In GaAs) 1/ Formerly model number 555B-EMI.	1	0XY53	560XL-EMI
6203DB	Optical power meter (+3 to -60 dBm,1 mm (.04 inch) In GaAs) 2/ Formerly model number 555B.	1	0XY53	560XL
	ADAPTER SELECTIONS FOR OPTICAL POWER METER			
6203EA	FC adapter, Snap-On Connector interface (SOC)	1	0XY53	T1020
6203EB	ST adapter, SOC	1	0XY53	T1030
6203EC	Test probe adapter, M38999, SOC	1	0XY53	T1038

1/ Militarized for high EMI environment in accordance with MIL-STD-461 and other environmental compliance with MIL-PRF-28800.
2/ Commercial variant of product
3/ Used fixed interfaces (either FC, SC or ST) and are not replaceable (where –xx in part number is FC, SC or ST).
4/ Product for non-EMI optical source (LED, 850 and 1300 nm, full fill), Model 252A-AS100 is no longer available.

REQUIREMENT 6203

Source: https://assist.dla.mil -- Downloaded: 2016-12-31T21:10Z
Check the source to verify that this is the current version before use.

TABLE 6203 – II. Visual fault finder (locator) test equipment.

Item	Description	Quantity	CAGE code	Part number
6203FA	Visual Fault Locator (VFL) with 2.5 mm (.10 inch) ferrule adapter 1/		1QLU8	FFL-050
6203FB	Adapter tip, 2.5 mm-to-1.25 mm (.10 inch to .05 inch), for FFL-050		1QLU8	FFL-050-U12
6203FC	Adapter cable, 2.5 mm-to-1.58 mm (.10 inch to .06 inch), for FFL-050		2/	3/

1/ Ensure that any alternate selection is one with a Class 2 laser classification and a power level rated at 1 mW (versus one with a Class 3A and a 5 mW power level).
2/ Suggested sources in accordance with NSWC DD certified MQJ vendors are CAGE Codes 3ET44, 08RC6, 53669, 088U0.
3/ This requirement can be satisfied by a jumper (single fiber cable patch cord), 1.25 mm-to-2.5 mm (.05 inch to .10 inch) ferrule diameter (such as LC-to-ST), approximate 30.48 cm (1 foot) length, 62.5/125 micron fiber. The single fiber cable shall consist of a buffered fiber surrounded with a concentric layer of yarn strength members and polymer jacket. Single fiber cable shall be of sufficiently robust construction to permit frequent handling and have a minimum diameter of 2 mm (.08 inch) nominal.
4/ Product for non-EMI optical source (LED, 850 and 1300 nm, full fill) Model 252A-AS100 is no longer available.

TABLE 6203 – III. Retention clip seating tester.

Item	Description	Quantity	CAGE code	Part number
6203GA	Retention clip seating tester, fiber optic termini, M29504/4, M29504/5, M29504/14, M29504/15, M29504/18 in accordance with Requirement 6301.	1	11851	HT260-2N
			1EG24	K-504FO Kit

TABLE 6203 – IV. Supplemental test equipment.1/, 2/

Item	Description	Quantity	CAGE code	Part number
6203HA	Return loss meter and test set (LD, 1310 nm and 1550 nm), one unit, ST and FC adapters, mandrel, 10 dB to 45 dB ORL measurement range NSN 6650-01-508-2437	N/A	0XY53	525N-60
	(alternate selection) Return loss meter and test set (LD, 1310 nm and 1,550 nm), one unit, APC-SC interface, APC jumper, mandrel, 0 to 65 dB ORL measurement range	N/A	0NL21	ORL3-3 ASC
6203HB	OTDR, Avionics, 100/140 micron MM fiber size, high resolution, cm wavelength, field verification of cal 1/	N/A	OXY53	OFM-1020-85MM100-CAL
6203HC (with first option of modules)	OTDR, general use, 3 meter (9.84 foot) resolution, OTDR mainframe w/ multimode 850 nm and 1300 nm modules only 2/ NSN 6625-01-560-2285	N/A	61141	TB6000-NV-P1
6203HD (with second option of modules)	OTDR, general use, 3 meter (9.84 foot) resolution, OTDR mainframe w/ single mode 1310 nm module only 2/ NSN 6625-01-560-2320	N/A	61141	TB6000-NV-P2
6203HE (with third option of modules)	OTDR, general use, 3 meter (9.84 foot) resolution, OTDR mainframe w/ both multimode modules and single mode module 2/ NSN 6625-01-560-2325	N/A	61141	TB6000-NV-P3

1/ Currently recommended OTDR until more portable cm resolution OTDR is available.
2/ OTDR use is used for inspection of cable reels. For troubleshooting (finding location of breaks) in cable harness segments (short cable lengths in meters), use 6203HB. Module is under development with cm resolution for this OTDR mainframe.

REQUIREMENT 6203

Source: https://assist.dla.mil -- Downloaded: 2016-12-31T21:10Z
Check the source to verify that this is the current version before use.

TABLE 6203 – V. Common test set (kit) for fiber optic testing and troubleshooting. 1/, 2/, 3/

Item	Description	Quantity	CAGE code	Part number
6203JA	Test set, common, for fiber optic testing and troubleshooting, NSN 6070-01-518-6383	1		3876AS100-1
OPTICAL SOURCE, MULTIMODE				
6203AA	Optical source (LED, 850 nm & 1300 nm, full fill) 2/ Formerly model number 252A-AS100-EMI.	1	0XY53	570XL-AS100-EMI
	OPTICAL SOURCE SELECTIONS, SINGLE MODE			
6203BA	Optical source (LD, 1310 nm and1550 nm) 2/ Formerly model number 266A-EMI.	1	0XY53	580XL-EMI
	ADAPTER SELECTION FOR OPTICAL SOURCES			
6203CB	ST adapter	3	0XY53	ATS-108
	OPTICAL POWER METER SELECTIONS			
6203DA	Optical power meter (+3 to -60 dBm,1 mm (.04 inch) InGaAs) 2/ Formerly model number 555B-EMI.	1	0XY53	560XL-EMI
ADAPTER SELECTIONS FOR OPTICAL POWER METER				
6203EB	ST adapter, SOC	1	0XY53	T1030
6203EC	Test probe adapter, M38999, SOC	1	0XY53	T1038
6203ED	SOC removal adapter tool	1	0XY53	90SOC
	SUPPLEMENTAL ITEMS			
6203ED	SOC removal adapter tool	1	0XY53	90SOC
6205PA	Attenuator, MM, fixed, -3 dB, 850 nm, ST interface	2	4TA86	ATP-STU-03-62-85
6205PB	Attenuator, MM, fixed, -3 dB, 1300 nm, ST interface	2	4TA86	ATP-STU-03-62-13
6205PC	Attenuator, SM, fixed, -3 dB, 1550 nm, ST interface	2	4TA86	ATP-STU-03-SM
6205MA	Reference adapter, M38999, test probe-to-test probe	2	06324	180-043C
6205ME	Adapter, ST – to – FC, NSN 5935-01-578-6650	2	031S7	F-FDT-STFC-MMSX
6205MI	Reference/Measurement adapter, ST-to-ST adapter	2	0XY53	MST-S0
6205ML	Adapter, ST – to – LC, NSN 5935-010-578-6551	2	031S7	F-FDT-STFC-MMSMSX
6205NA	Measurement adapter, test probe-to-M29504/4 pin terminus	2	06324	180-049C
6205NB	Measurement adapter, test probe-to-M29504/5 socket terminus	2	06324	180-050C
6207AAH	MQJ, ST – to - ST, multimode 62.5/125 micron, 2m length	3	06234	FO00581-62
6207AAC	MQJ, ST – to – ST, single mode 9/125 micron, 2m length	3	06234	FO0180-9E

1/ Kit prepared by NAVAIR 4.8 based on functions designated by participating platforms.
2/ Militarized for high EMI environment in accordance with MIL-STD-461 and other environmental compliance with MIL-PRF-28800.
3/ This set is referred to as the "Fiber Optic Test Set (FOTS).

REQUIREMENT 6203

Source: https://assist.dla.mil -- Downloaded: 2016-12-31T21:10Z
Check the source to verify that this is the current version before use.

TABLE 6203 – VI. Ferrule length gauge.

Item	Description	Quantity	CAGE code	Part number
6203JA	Ferrule length gauge, measure ferrule protrusion length of, fiber optic termini (M29504/4, M29504/5, M29504/14, M29504/15, M29504/18, /20, /21) in accordance with Requirement 6305.	1	08RC6	0701-3300

5. Implementation. Unless otherwise specified by the applicable Platform Office, Fiber optic support equipment (SE) for fiber optic cabling test and troubleshooting used shall be restricted to those in table 6203 – I through table 6203 – V. The support equipment (SE) for fiber optic cabling test and troubleshooting is used at the connection ends (connectors and termini) of the cabling that are a part of a fiber optic cable harness, those to transition to end user equipment interfacing with the cable harness, and those on patch cords.

6. Notes.

6.1 Intended use. On these platforms, the fiber optic test and troubleshooting equipment are intended to be used on (1) cable harnesses, (2) fiber optic test jumpers, and (3) other miscellaneous cabling.

TABLE 6203-VII. OPTICAL LOSS TEST SETS (OLTS), NAVY SHIPBOARD.

Item	Description	Quantity	CAGE Code	Part Number
6203LA	Optical Loss Test Set (OLTS), Single Mode, PC polished interface ports 1/, 2/	5/	TBD	TBD
6203LB	Optical Loss Test Set (OLTS), Multimode 3/, 4/	5/	TBD	TBD
6203LC	Optical Loss Test Set (OLTS), Single Mode, APC polished interface ports 1/	5/	TBD	TBD

1/ Replaces CAGE Code 0XY53, Model 525N-60-PCX OLTS under former SCAT 4954/SCAT 4952, NRL 5524 of 13 March 2002.
2/ A single mode OLTS is used to measure optical loss and return loss.
3/ Replaces CAGE Code 0XY53, Model 525N-30-PCX OLTS under former SCAT 4954/SCAT 4952, NRL 5524 of 13 March 2002.
4/ A multimode OLTS is used to measure optical loss.
5/ Quantity depends on ship class, refer to SPETERL (Ship Portable Electrical/Electronic Test Equipment Requirement List) for quantities.

REQUIREMENT 6203

Source: https://assist.dla.mil -- Downloaded: 2016-12-31T21:10Z
Check the source to verify that this is the current version before use.

TERMINATION EQUIPMENT

1. Purpose. This requirement refines or bounds (constrains) the selection of the fiber optic support equipment (SE) used to place the fiber optic single ferrule connector or terminus onto the end of a fiber optic cable. Included is equipment for cutting and strapping, injecting and crimping, curing, polishing, and connector assembly. This requirement is intended for developmental, prototype, production, rework and modification programs on military platform fiber optic cable assemblies.

1.1 Supplemental, termination. This requirement defines the tools and accessories that comprise the set (kit) for terminating (securing) a fiber optic connector, both single ferrule and multiple termini type, on the end of a fiber optic cable. When the termination equipment (including polishing pucks, polishing paper, etc.) are used properly in accordance with the specified connector/terminus termination procedure, connector/terminus end face polishes with optical loss and return loss (single mode only) values, as specified in the component specifications, will be obtained. Also, this equipment is to be used with cleaning and inspection (using a Fiber Optic Video Inspection System, FOVIS) in Requirement 6201 and Requirement 6202 for ferrule end face inspection and cleaning where some of the termination equipment (such as polishing puck and polishing paper) are used (required) as part of the cleaning operation. The recommended connector/terminus termination equipment supports the following tasks:

a. Cut and strip fiber optic cable, aramid yarn and optic fiber buffer/coating. This operation requires the use of cable and aramid yarn cutting and buffer stripping tools.

b. Crimp aramid yarn (such as Kevlar) of fiber optic cable onto the connector. This operation requires the use of crimp tools and dies.

c. Cure epoxy to secure the optic fiber to the ferrule at a specified cure cycle. This operation requires the use of specified curing oven and connector/terminus holding fixtures.

d. Polish the ferrule end face to obtain the required optical loss and return loss. This operation requires the use of polishing pads, pucks and plates.

2. Applicable documents.

2.1 General. The documents listed in this section are specified in sections 3, 4, and 5 of this standard practice. This section does not include documents cited in other sections of this standard practice or recommended for additional information or as examples. While every effort has been made to ensure the completeness of this list, document users are cautioned that they must meet all specified requirements of documents cited in sections 3, 4, and 5 of this standard practice, whether or not they are listed.

2.2 Government documents.

Source: https://assist.dla.mil -- Downloaded: 2016-12-31T21:10Z
Check the source to verify that this is the current version before use.

2.2.1 Specifications, standards, and handbooks. The following specifications, standards, and handbooks form a part of this document to the extent specified herein. Unless otherwise specified, the issues of these documents are those cited in the solicitation or contract.

DEPARTMENT OF DEFENSE SPECIFICATIONS

MIL-PRF-29504/4-	Termini, Fiber Optic, Connector, Removable, Environment Resisting, Pin Terminus, Size 16, Rear Release, MIL-DTL-38999, Series III.
MIL-PRF-29504/5-	Termini, Fiber Optic, Connector, Removable, Environment Resisting, Socket Terminus, Size 16, Rear Release, MIL-DTL-38999, Series III.
MIL-PRF-29504/18-	Termini, Fiber Optic, Connector, Removable, Environment Resisting, Genderless Terminus, Rear Release, Ceramic Ferrule, 1.25 MM Ferrule, (for MIL-PRF-64266 Connectors).
MIL-PRF-28876-	Connectors, Fiber Optic, Circular, Plug and Receptacle Style, Multiple Removable Termini, Genera Specification for.
MIL-PRF-64266-	Connectors, Fiber Optic, Circular and Rectangular, Plug and Receptacle Style, Multiple Removable Genderless Termini, Environment Resisting General Specification for
MIL-DTL-38999-	Connectors, Electrical, Circular, Miniature, High Density, Quick Disconnect, (Bayonet Threaded and Breech Coupling), General Specification for.

(Copies of these documents are available online at http://quicksearch.dla.mil or from the Standardization Document Order Desk, 700 Robbins Avenue, Building 4D, Philadelphia, PA 19111-5094.)

2.2 Other Government documents, drawings, and publications. The following other Government documents, drawings, and publications form a part of this standard practice to the extent specified herein. Unless otherwise specified, the issues are these documents are those cited in the solicitation or contract.

NAVAIR 01-1A-505-4/ T.O. 1-1A-14-4/TM1-1500-232-24-4-	Installation and Testing Practices Aircraft Fiber Optic Cablng

(A copy of this document is available online at: https://mynatec.navair.navy.mil. NATEC has three different processes to obtain the manual, depending on if you are Government personnel (military and civilians), Contractors with a Government contract, or everyone else. If unable to access this Web Site or require further assistance, contact (1) NATEC Customer Service: 619.545.1888, (2) NATEC Website Status Hotline: 619.545.1706, or (3) NATEC Customer Service E-mail: nani_customerservice@navy.mil.)

2.3 Non-Government publications. The following documents form a part of this document to the extent specified herein. Unless otherwise specified, the issues of these documents are those cited in the solicitation or contract.

TELECOMMUNICATIONS INDUSTRY ASSOCIATION

TIA-604-2-	FOCIS-2 Fiber Optic Connector Intermateability Standard, Type ST.
TIA-604-3-	FOCIS-3 Fiber Optic Connector Intermateability Standard, Type SC and SC-APC.
TIA-604-4-	FOCIS-4 Fiber Optic Connector Intermateability Standard, Type FC and FC-APC.
TIA-604-10-	FOCIS-10B Fiber Optic Connector Intermateability Standard, Type LC.

(Copies are available online at www.tiaonline.org or from Telecommunications Industry Association (TIA), 2500 Wilson Boulevard, Suite 300, Arlington VA 22201.)

REQUIREMENT 6204

Source: https://assist.dla.mil -- Downloaded: 2016-12-31T21:10Z
Check the source to verify that this is the current version before use.

2.4 Order of precedence. Unless otherwise noted herein or in the contract, in the event of a conflict between the text of this document and the references cited herein, the text of this document takes precedence. Nothing in this document, however, supersedes applicable laws and regulations unless a specific exemption has been obtained.

3. Definitions.

3.1 Termination. The act used to secure a fiber optic terminus or connector onto the end of a fiber optic cable.

4. Requirements. Fiber optic termination equipment shall be standardized for commonality compliance across platforms. Commonality compliance is that which bounds or restricts the support equipment to those recognized by the Joint Fiber Optic Working Group (JFOWG), cited in the General Series Technical Manual for Fiber Optic Cabling (NAVAIR 01-1A-505-1/T.O. 1-1A-14/TM 1-1500-232-24-4) and, as a result, cited in this Standard Practice.

5. Implementation. Unless otherwise specified by the applicable Platform Office, fiber optic termination equipment used shall be restricted to those in table 6204 – I through table 6204 – III. Connector machine polish equipment and supplies.1/, 2/, 3/, 4/

. This fiber optic termination equipment is used for securing connectors and termini onto the cabling ends that are a part of a fiber optic cable harness, those to transition to end user equipment interfacing with the cable harness, and those on patch cords.

REQUIREMENT 6204

Source: https://assist.dla.mil -- Downloaded: 2016-12-31T21:10Z
Check the source to verify that this is the current version before use.

TABLE 6204 – I. Connector termination equipment. 1/

Item	Description	Quantity	CAGE code	Part number
CUTTING AND STRIPPING				
6204AA	Strip tool, buffer (micro strip), commercial and M85045/16 fiber, w/ red blades NSN 5110-01-419-4361	1	08RC6	0700-3070
6204AB	Blades, aircraft fiber, strip tool, buffer (micro strip), light blue blades	1	59984	MS1-RB-10S
6204AC	Strip tool, buffer (no nicks), commercial and M85045/16 fiber, red handle	1	71827	NN203
			08RC6	0700-3130
6204AD	Strip tool, buffer (no nicks), aircraft fiber, blue handle (alternative to 6204AC)	1	71827	NN254
			08RC6	0700-3132
6204AE	Strip tool, OFCC, AWG 18, commercial and M85045/16 cable	1	75347	11045
			64959	104 278 478
			08RC6	0700-3062
6204AF	Strip tool, aircraft tight buffered cable	1	30119	45-162
6204AG	Strip tool, aircraft loose tube cable	1	30119	45-163
6204AH	Shears, Aramid yarn (Kevlar) NSN 5110-01-419-5283	1	71827	86 1 /2S
			OKN34	744
			08RC6	0700-3315
6204AI	Marking pen, permanent	1	08RC6	1500-9200
6204AJ	Template, cut length, TIA-604-3 (SC)	1	08RC6	0100-1045
6204AK	Template, cut length, TIA-604-10 (LC), Tyco	1	08RC6	0100-1530
6204AL	Template, cut length, TIA-604-10 (LC), OFS	1	08RC6	0100-1535
6204AM	Template, cut length, TIA-604-2 (ST) (M83522/16) NSN6675-01-420-5614	1	08RC6	0700-3870
6204AN	Template, cut length, MIL-PRF-29504/4 and MIL-PRF-29504/5, style 1 (M38999)	1	08RC6	0100-1510
6204AO	Template, cut length, MIL-PRF-29504/4 and MIL-PRF-29504/5, style 2 (M38999)	1	08RC6	0100-1541
6204AP	Template, cut length, MIL-PRF-29504/4 and MIL-PRF-29504/5, style 3 (M38999)	1	08RC6	0100-1546
6204AQ	Ruler, machinist NSN 5200-00-725-7347	1	81348	GGG-R-79
			32445	SS-6
6204AR	Ruler, 152.4 mm (6 inch), standard/metric (alternate to 6204AQ)	1	08RC6	0701-5010
6204AS	Cleaning (music) wire, 125 um, w/ container (3 pieces min) NSN 9505-01-376-9398	1	08RC6	0700-3210
6204AT	Pick, for separating aramid yarn (fiber glass/Kevlar)	1	08RC6	0700-3340
6204AU	Template, cut length, MIL-PRF-29504/18 (M64266)	1	0YPM2	FSST100021
			06324	182-020
6204AV	Template, cut length, non pull proof, SC connector, TE connectivity (formerly TYCO)	1	08RC6	0100-1530
6204AW	Template, cut length, pull proof, SC connector, TE connectivity (formerly TYCO)	1	08RC6	0100-1531

See footnote at end of table.

Source: https://assist.dla.mil -- Downloaded: 2016-12-31T21:10Z
Check the source to verify that this is the current version before use.

TABLE 6204 – I. Connector termination equipment – Continued.

Item	Description	Quantity	CAGE code	Part number
INJECTING and CRIMPING				
6204CA	Crimp tool (frame), single ferrule connectors NSN 5120-01-419-3735	1	30119	28-500
			OMP99	2100
6204CB	Crimp tool and die set, SC connector, non pull proof NSN 5120-01-419-4363	1	30119	28-401
6204CC	Crimp tool and die set, SC and FC connectors	1	08RC6	0700-1875
6204CD	Crimp tool and die set, LC connector	1	08RC6	0700-1885
6204CE	Crimp tool (frame), M29504/4 & /5 style 3 terminus	1	08RC6	0700-1830
6204CF	Crimp die, M29504/4 & M29504/5 style 3 termini	1	08RC6	0700-1891
6204CG	Crimp tool and die set, ST connector (alt to both 6204CA and 6204CB)	1	08RC6	0700-1855
6204CH	Crimp tool with die set having .0945 hex for MIL-PRF-29504/14, MIL-PRF-29504/15 and MIL-PRF-29504/18.	1	53669	1143130-9S
			08RC6	0701-2001
6204CI	Die set, SC connector, pull proof (need crimp tool frame from 6204CC)	1	08RC6	0700-1861
6204CJ	Polishing tool (puck), APC polish, M29504/20 terminus	1	08RC6	0700-1732
			06324	182-021K
			0YPM2	FSTF10354-3
CLEAVING (SCORING)				
6204CR	Scribe, fiber optic, carbide NSN 5110-01-419-4360	1	0YPM2	FSTP0010
			08RC6	0700-3750
6204CS	Debris bottle, flip-top, for cleaved fiber ends	1	08RC6	0700-9975
CURING				
6204DA	Curing oven, multiple step cure,programmable, epoxy curing, with heater block (24 termini ports and 12 larger 2.5 mm port on one side), cable stand post, cable stand ring and cable clamps	1	08RC6	0721-1305
6204DB	Cure adapter, TIA-604-2 (ST)	12		
			08RC6	0700-1450
6204DC	Cure adapter , TIA-604-3 (SC)	12		
			08RC6	0700-1455
6204DD	Cure adapter, TIA-604-4 (FC)	12		
			08RC6	0700-1455
6204DE	Cure adapter, TIA-604-10 (LC)	24	08RC6	0700-1456
6204DF	Cure adapter, pin terminus, M29504/4 (M38999)	24	08RC6	0721-1125
6204DH	Cure adapter, pin terminus, M29504/18 (M64266)	24	08RC6	0700-1456
6204DI	Micro clip	24	76545	BU-34
6204DL	Needle nose pliers 1/	1	08RC6	0745-2260
6204DM	Curing oven, single step cure, without heater block, cable stand post, cable stand ring and cable clamps, NSN 4430-01-419-6384	1	08RC6	0701-4010
6204DN	Heater block, 16 port for termini or on reverse side 12 port for single ferrule connectors (LC, ST, SC, FC), NSN 6070P N420-7682	1	08RC6	0701-4020
6204DO	Cable stand post for curing oven (both 6204DA and 6204DM), NSN 6070-01-430-4607	1	08RC6	0701-4030
6204DP	Cable stand ring for curing oven (both 6204DA and 6204DM), NSN 5365-01-420-3692	1	08RC6	0701-4040
6204DQ	Cable clamps (both 6204DA and 6204DM), NSN 5340-01-422-2168	2	08RC6	0701-4060
POLISHING				
6204FA	Polishing tool (puck), ST, SC and FC	1	08RC6	0700-1750
6204FB	Polishing tool (puck), M29504/4 pin, styles 1, 2, and 3 (M38999), w/o grooves	1	06324	182-001P
6204FC	Polishing tool (puck), M29504/5 socket , styles 1, 2, and 3 (M38999), w/o grooves	1	06324	182-001S
6204FD	Polishing tool (puck), LC connector	1	08RC6	0700-1725
6204FE	Polishing tool (puck), ceramic ferrule, M29504/4 pin and M29504/5 socket, style 1, 2, 3 (Alt to both 6204FB and 6204FC)	1	08RC6	0721-1530
6204FF	Polishing plate (glass,152.4 mm x 152.4 mm (6 inch x 6 inch) min NSN 6080-01-377-4502	1	08RC6	0700-4110
6204FG	Resilient pad, 70 to 90 durometer (alternatives, see 6204SA to 6204SC)	1	76381	78-8073-7525-4
			41946	960-00071
			08RC6	0700-2045
6204FH	Water bottle, 4 ounce Squeeze, w/ cap NSN 8125-01-428-8839	1	08RC6	0700-9700

See footnote at end of table.

Source: https://assist.dla.mil -- Downloaded: 2016-12-31T21:10Z
Check the source to verify that this is the current version before use.

TABLE 6204 – I. Connector termination equipment – Continued.

Item	Description	Quantity	CAGE code	Part number
POLISHING – Continued.				
6204FI	Polishing tool (puck), 1.25 mm (.05 inch) ferrule, generic (use for M29504/18, alternative to 6204CD for LC connector)	1	0YPM2	FSPP-113-00-003
			06324	182-022
			0CKD9	F16930UN
6204FJ	Polishing tool (puck), APC polish, M29504/20 terminus	1	08RC6	0100-1732
			06324	182-021K
			0YPM2	FSTF10354-3
CONNECTOR ASSEMBLY				
6204GA	Boot ring tool, ST connector, FSI	1	08RC6	0701-3070
6204GB	Screwdriver, reversible	1	08RC6	4300-9000
6204GC	Alignment (guide) sleeve removal tool, only for metal ferrule with jewel insert termini	1	71468	140146-0001A
6204GD	Alignment (guide) sleeve insertion (installation) tool, only for metal ferrule with jewel insert termini	1	71468	140146-0000A
6206CE	Insertion tool, metal, for M29504/4 and M29504/5	1	81349	M81969/8-07
6206CF	Insertion and extraction tool, plastic, for M29504/4 and M29504/5	3	81349	M81969/14-03
6206CG	Removal tool, metal, for M29504/4 and M29504/5	1	81349	M81969/8-08
MISCELLANEOUS				
6204HA	Flashlight	1	62576	230
			7J761	1900C
6201AH	Foreign Object Debris (FOD) pouch	6	08RC6	0400-3020
6204HC	Tweezers	1	08RC6	0700-8911
6204HD	Eye loop, 7X min for viewing end face after each polish step NSN 6650-01-232-9536	1	06175	654 2039
			4M564	ELP-174 10X
SAFETY				
6204IA	Safety glasses NSN 6540-01-433-7953	1	75347	60050
			7J61	TK110
			08RC6	0700-8810
6204IB	Tweezers, Teflon coated NSN 6635-01-232-9536	1	32218	GTP-293
			7J761	6005268
			08RC6	0700-3196
6204IC	Mat, black, non-reflective work surface, 304.8 mm x 457.2 mm (12 inchesx18 inches) min.	1	71827	FS100
			08RC6	0700-9985

1/ Usage for needle nose pliers. Polishing: Removal of cure adapters if stick in oven due to epoxy leakage onto oven heating well bottom. Connector assembly: Removal of alignment sleeves from terminus pins.

TABLE 6204 – II. Connector termination supplies.

Item	Description	Quantity	Cage Code	Part number
CUTTING and STRIPPING				
6204JA	Masking tape, 19.05 mm x 36.78 m (3/4 inch x 40 yards) minimum NSN 7500—01-539-0552	1	08RC6	3300-6010
INJECTING and CRIMPING				
6204KA	Epoxy, heat cured, 2 part, 353ND, 2 gram A-PAKS, Temperature Range 2	100 min	64201	353ND-2g
		6	08RC6	3700-5520
6204KB	Syringe barrel (reservoir), 3 ml, for epoxy injection into connector/terminus	50 per box	0XUL4	7012072
6204KC	Syringe plunger with piston (piston = flexible plastic bottom cap), for epoxy injection into connector/terminus	50 per box	0XUL4	7014779

See footnote at end of table.

Source: https://assist.dla.mil -- Downloaded: 2016-12-31T21:10Z
Check the source to verify that this is the current version before use.

TABLE 6204 – II. Connector termination supplies – Continued.

Item	Description	Quantity	CAGE code	Part number
6204KD	Dispensing (syringe) tip (needle), twist on, 20 gauge, 25.4 mm (1 inch) long, blunt end, for epoxy injection into all connector types except pull proof SC and LC connectors	50 per box	0XUL4	7018166
		1	08RC6	0700-5111
6204KE	Dispensing (syringe) tip (needle), twist on, 18 gauge, 12.7 mm (.5 inch) long, blunt end, for epoxy injection into pull proof SC and LC connectors only	50 per box	0XUL4	7018122
6204KF	Syringe (barrel, plunger and piston) w/twist on 20 gauge dispensing tips (needles), 3 ml capacity for dispensing epoxy NSN 5120-01-539-0526 Alternative to ordering 6204KB, 6204KC and 6204KD since packaged as a set.	24 per pack	08RC6	0700-5100
6204KG	Syringe (barrel, plunger and piston) w/twist on 18 gauge dispensing tips (needles), 3 ml capacity for dispensing epoxy Alternative to ordering 6204KB, 6204KC and 6204KE since packaged as a set.	24 per pack	08RC6	0700-5110
6204KH	Epoxy, fast cured, Double Bubble Red, 2 part, 3.5 gram, 100/box for NSN NSN 8040-00-092-2816	1 box	96900	04001
		6	08RC6	0700-5510
6204KI	Dental floss, un-waxed, 45.72 m (50 yards) minimum NSN 6520-00-092-3181	1	32132	9215
6204KJ	Epoxy, temperature range 1, heat cured, 2 part, bi-pack, MIL-A-24792, NSN 8040-01-421-3510	1 box	96900	04001
		6	08RC6	0700-5510
CURING				
	None			
POLISHING				
6204MA	Polishing paper, 5um (.0002 inch), foam backed, 127 mm x 127 mm (5 inches x 5 inches) min, 50 sheets NSN 5350-01-420-1454	2	08RC6	0700-2660
			41946	915-05-604
6204MB	Alternate to 6204MA: polishing paper, 5 um (.0002 inch), foam backed, 203.2 mm x 279.4 mm (8 inches x 11 inches) min	1	64959	105 448 175
6204MC	Polishing paper, 1um, mylar backed sheet, aluminum oxide, 139.7 mm x 139.7 mm (5.5 inches x 5.5 inches) minimum, 50 sheet pack NSN 5350-01-563-5480	2	08RC6	0700-2620
			41946	915-01-301
6204MD	Alternate to 6204MC: polishing paper, 1 um, mylar backed sheet, alumina, 8 x 11 min	1	64959	105 076 798
6204ME	Polishing paper, 0.1um, (.000004 inch) mylar backed, diamond, 10 sheets NSN 5350-01-545-0206	1	078Z1	60-0000-2856-7
			08RC6	0700-2720
6204MF	Alternate to 6204MC when 1 um (.00004 inch) diamond versus alumina: polishing paper, 1 um (.00004 inch), mylar backed diamond, 10 sheet	1	078Z1	05-1119-8740-7
			08RC6	0700-2805
6204MG	Polishing paper, ultrafine (0.5 um (.000002 inch) silica), 127 mm (5 inch) dia.	100 sheet	3OCX5	HF5D
SAFETY				
	None			
CONNECTOR ASSEMBLY				
	None			
MISCELLANEOUS				
	Cleaning supplies1/			
6204PC	Gloves,examining,nitrile,powder-free,152.4 µm (6 mil) thick, 100/box	1	59728	5761R08

1/ Cleaning supplies are listed in Requirement 6201. Recommend cleaning supplies for connector terminations are: canned air, cleaning cloth, solvent dispenser, alcohol, and swabs.

REQUIREMENT 6204

Source: https://assist.dla.mil -- Downloaded: 2016-12-31T21:10Z
Check the source to verify that this is the current version before use.

TABLE 6204 – III. Connector machine polish equipment and supplies.1/, 2/, 3/, 4/

Item	Description	Quantity	CAGE code	Part number
POLISHER (MACHINE POLISH)				
6204QA	SpecPro 4L base polishing system	1	3ZCB8	SP4L
6204QB	4 Position, 1.25mm (.05 inch) ferrule APC polish work holder (for both LC connector and M29504/20 termini) 3/	1	3ZCB8	4LWH4-67
6204QC	4 Position, 1.25 mm (.05 inch) ferrule PC polish work holder (for LC connector and M29504/18 and M29504/20 termini 1/		3ZCB8	4LWH4-82
6204QD	4 Position, Size 16 1.587mm (.06 inch) M29504/4 and M29504/5 termini PC polish work holder (termini for MIL-DTL-38999 connector)	1	3ZCB8	4LWH4-62
6204QE	4 Position, 2.0 mm (.08 inch) M29504/14 and M29504/15 termini PC polish work holder (termini for MIL-PRF-28876 connector)	1	3ZCB8	4LWH4-60
6204QF	4 Position, 2.5 mm (.10 inch) ferrule single fiber ferrule PC polish work holder	1	3ZCB8	4LWH4-10
6204QG	4 position, universal PC work holder (for ferrule diameters including 1.25mm (.06 inch), 1.58mm (.06 inch), 2.0mm, (.08 inch) and 2.5mm(.10 inch) and the M29504/4, M29504/5, M29504/14, M29504/15, M29504/18 and M29504/20 termini). This work holder is an alternative for(to replace) 6204QD, 6204QE and 6204QF 4/	1	3ZCB8	4LWH4-50
POLISHING FILMS (PAPER) FOR MACHINE POLISHER				
6204RA	Polishing Film, 5 micron alumina, 101.6 mm (4 inch) diameter	1 pack	3ZCB8	PF05.0A-P
6204RB	Polishing Film, 1 micron alumina, 101.6 mm (4 inch) diameter	1 pack	3ZCB8	PF01.0A-P
6204RC	Polishing Film, 1 micron diamond, 101.6 mm (4 inch) diameter	1 pack	3ZCB8	PF01.0D-P
6204RD	Polishing Film, 0.1 micron diamond, 101.6 mm (4 inch) diameter	1 pack	3ZCB8	PF00.1D-P
6204RE	Polishing Film, 0.3 micron alumina, 101.6 mm (4 inch) diameter	1 pack	3ZCB8	PF00.3A-P
POLISHING PADS (FOR MACHINE POLISHER) 2/				
6204SA	Polishing Pad, 90 Durometer, 101.6 mm (4 inch) diameter	1 pack	3ZCB8	PP-090-4
6204SB	Polishing Pad, 70 Durometer, 101.6 mm (4 inch) diameter	1 pack	3ZCB8	PP-070-4
6204SC	Polishing Pad, 40 Durometer, 101.6 mm (4 inch) diameter	1 pack	3ZCB8	PP-040-4

1/ Former 4 position, 1.25 mm LC connector work holder, part number 4LWH4-80 has been superseded by Part No. 4LWH4-82 designed to support both the LC connector and the MIL-PRF-29504/18 & MIL-PRF-29504/20 termini.
2/ Polishing pads can be used for hand polishing also.
3/ Former 4 position, 1.25 mm LC connector work holder, part number 4LWH-80 has been superseded by part number 4LWH4-82 to support both the LC connector and the MIL-PRF-29504/18 and MIL-PRF-29504/20 termini.
4/ This work holder is an alternative for (to replace four) work holder models 4LWH4-82, 4LWH-62, 4LWH-60, 4LWH-10(for the 1.25 mm, 1.58 mm, 2.0 mm and 2.5 mm diameter ferrules).

REQUIREMENT 6204

Source: https://assist.dla.mil -- Downloaded: 2016-12-31T21:10Z
Check the source to verify that this is the current version before use.

TABLE 6204 – IV. Connector "handheld polisher" equipment and supplies. 1/

Item	Description	Quantity	Cage code	Part number
Polishing (cleaving)				
6204UA	Polishing, hand held, (HHP), ferrule end face (alternative process for 2nd and 3rd steps of hand polish on plate)	1	3ET44	HHP-001
6204UB	Polish film cassette/cartridge, HHP, fiber optic, 1.0 micron polish film	1	3ET44	111801-1
6204UC	Polish film cassette/cartridge, HHP, fiber optic 0.1 micron polish film	1	3ET44	111801-2
6204UD	Backer pad, soft (60A)	1	3ET44	112754-1
6204UE	Backer pad, hard (60D)	1	3ET44	112754-2
6204UF	Removal tool, backer pad	1	3ET44	RTBP-001
6204UG	Tooling chuck 2.5 mm diameter ferrule, ST connector	1	3ET44	112757
6204UH	Tooling chuck 1.25 mm diameter ferrule, for LC connector	1	3ET44	111908
6204UI	Tooling chuck 1.25 mm diameter ferrule, for MIL-PRF-29504/18 & MIL-PRF-29504/20 termini, chuck for PC polish	1	3ET44	111912
6204UJ	Tooling chuck 1.25 mm diameter ferrule, for MIL-PRF-29504/20 terminus, chuck for APC polish	1	3ET44	TBD (To Be Determined)
6204UK	Tooling chuck 1.58 mm diameter ferrule, for MIL-PRF-29504/4 (pin), terminus	1	3ET44	111902
6204UL	Tooling chuck 1.58 mm diameter ferrule, for MIL-PRF-29504/4 (pin), terminus	1	3ET44	111904
6204UM	Tooling chuck 2.0 mm diameter ferrule, for MIL-PRF-29504/14 & MIL-PRF-29504/15 termini	1	3ET44	112758
6204UN	Tooling chuck 2.5 mm diameter ferrule,SC connector	1	3ET44	111906
6204UO	Tooling chuck 2.5 mm diameter ferrule, FC connector	1	3ET44	111910

1/ The hand held polisher is a specific connector poslishing machine manufactured by CAGE code 3ET44.

6. Notes.

6.1 Intended use. On these platforms, the fiber optic termination equipment is intended to be used for securing connectors and termini onto the ends of fiber optic cabling that are a part of (1) cable harnesses, (2) fiber optic test jumpers, and (5) other miscellaneous cabling.

Source: https://assist.dla.mil -- Downloaded: 2016-12-31T21:10Z
Check the source to verify that this is the current version before use.

OPTICAL LOSS MEASUREMENT SUPPLEMENTAL ITEMS

1. Purpose. This requirement refines or bounds (constrains) the selection of the fiber optic support equipment (SE) supplemental items used to perform the optical loss measurement. Included are the items to support the Glenair test probe type MQJ and the test terminus type MQJ. These items are the test probe adapters, test terminus adapters, reference adapters and measurement adapters. To check the operation of the optical source and power meter as a system, the supplemental items includes optical attenuators. This requirement is intended for developmental, prototype, production, rework and modification programs on military platform fiber optic cable assemblies.

1.1 Supplemental, items to support optical loss measurements. An optical loss measurement is performed in accordance with Method A of TIA/EIA-526-14 (two jumper method) or WP 009 01 of the General Series Maintenance Manual for Fiber Optic Cabling, technical manual identified as NAVAIR 01-1A-505-4/T.O. 1-1A-14-4/TM 1-1500-323-24-4. To perform this optical loss measurement with a multiple termini connector, a test probe adapter or a test terminus adapter, as applicable, is mated with the connector to ensure proper MQJ-to-terminus alignment. Also, to perform one step of the optical loss measurement for the two jumper method, a reference adapter is required to mate two MQJ's. In general, the above mentioned and other supplemental items are needed to successfully perform the optical loss measurement (see 6.2).

2. Applicable documents.

2.1 General. The documents listed in this section are specified in sections 3, 4, and 5 of this standard practice. This section does not include documents cited in other sections of this standard practice or recommended for additional information or as examples. While every effort has been made to ensure the completeness of this list, document users are cautioned that they must meet all specified requirements of documents cited in sections 3, 4, and 5 of this standard practice, whether or not they are listed.

2.2 Government documents.

2.2.1 Specifications, standards, and handbooks. The following specifications, standards, and handbooks form a part of this document to the extent specified herein. Unless otherwise specified, the issues of these documents are those cited in the solicitation or contract.

DEPARTMENT OF DEFENSE SPECIFICATIONS

MIL-PRF-29504-	Termini, Fiber Optic Connector, Removable, General Specification For.
MIL-PRF-29504/4-	Termini, Fiber Optic, Connector, Removable, Environment Resisting, Pin Terminus, Size 16, Rear Release, MIL-DTL-38999, Series III.
MIL-PRF-29504/5-	Termini, Fiber Optic, Connector, Removable, Environment Resisting, Socket Terminus, Size 16, Rear Release, MIL-DTL-38999, Series III.
MIL-PRF-29504/18-	Termini, Fiber Optic, Connector, Removable, Environment Resisting, Genderless Terminus, Rear Release, Ceramic Ferrule, 1.25 MM Ferrule, (for MIL-PRF-64266 Connectors).
MIL-PRF-29504/20-	Test Terminus, Fiber Optic, Keyed, Connector, Removable, Environment Resisting, Genderless Terminus, Rear Insert/Rear Release, 1.25 mm Ceramic Ferrule, (for MIL-PRF-64266 Connectors).

Source: https://assist.dla.mil -- Downloaded: 2016-12-31T21:10Z
Check the source to verify that this is the current version before use.

MIL-PRF-29504/21-	Test Terminus, Fiber Optic, Keyed, Removable, Use in Optical Loss and Optical Continuity Testing, Rear Insert/Rear Release Through a Test Terminus Adapter, 1.25 mm Ceramic Ferrule, 1.25 mm Ferrule, (for MIL-PRF-64266 Connectors).
MIL-PRF-64266-	Connectors, Fiber Optic, Circular and Rectangular, Plug and Receptacle Style, Multiple Removable Genderless Termini, Environment Resisting General Specification for
MIL-PRF-64266/32-	Connectors, Fiber Optic, Circular, Plug and Receptacle Style, Multiple Removable Genderless Termini, Screw Threads, Test Terminus Adapter, Receptacle Style, For Use With a Plug Connector.
MIL-PRF-64266/33-	Connectors, Fiber Optic, Circular, Plug and Receptacle Style, Multiple Removable Genderless Termini, Screw Threads, Test Terminus Adapter, Plug Style, For Use With a Connector Receptacle.
MIL-DTL-38999-	Connectors, Electrical, Circular, Miniature, High Density, Quick Disconnect, (Bayonet Threaded and Breech Coupling), General Specification for.

DEPARTMENT OF DEFENSE STANDARD

MIL-STD-1560-	Insert Arrangements for MIL-DTL-38999, MIL-DTL-27599, and MIL-C-29600, Series A, Electrical, Circular, Connectors.

(Copies of these documents are available online at http://quicksearch.dla.mil or from the Standardization Document Order Desk, 700 Robbins Avenue, Building 4D, Philadelphia, PA 19111-5094.)

2.2 Other Government documents, drawings, and publications. The following other Government documents, drawings, and publications form a part of this standard practice to the extent specified herein. Unless otherwise specified, the issues are these documents are those cited in the solicitation or contract.

NAVAIR 01-1A-505-4/ T.O. 1-1A-14-4/TM1-1500-232-24-4-	Installation and Testing Practices, Aircraft Fiber Optic Cabling.

(A copy of this document is available online at: https://mynatec.navair.navy.mil. NATEC has three different processes to obtain the manual, depending on if you are Government personnel (military and civilians), Contractors with a Government contract, or everyone else. If unable to access this Web Site or require further assistance, contact (1) NATEC Customer Service: 619.545.1888, (2) NATEC Website Status Hotline: 619.545.1706, or (3) NATEC Customer Service E-mail: nani_customerservice@navy.mil.) (

2.3 Non-Government publications. The following documents form a part of this document to the extent specified herein. Unless otherwise specified, the issues of these documents are cited in the solicitation or contract.

TELECOMMUNICATIONS INDUSTRY ASSOCIATION

TIA/EIA-526-14-	Optical Power loss Measurement of Installed Multimode Fiber Optic Plant IEC 61280-4-1 Edition 2, Fibre Optic Communications Subsystem Test Procedure Part 4 – 1: Installed Cable Plant Multimode Attenuation Measurement.

(Copies are available online at www.tiaonline.org or from Telecommunications Industry Association (TIA), 2500 Wilson Boulevard, Suite 300, Arlington VA 22201.)

2.4 Order of precedence. Unless otherwise noted herein or in the contract, in the event of a conflict between the text of this document and the references cited herein, the text of this document takes precedence. Nothing in this document, however, supersedes applicable laws and regulations unless a specific exemption has been obtained.

REQUIREMENT 6205

Source: https://assist.dla.mil -- Downloaded: 2016-12-31T21:10Z
Check the source to verify that this is the current version before use.

3. Definitions.

3.1 Measurement Quality Jumper (MQJ). The Measurement Quality Jumper (MQJ) is a low loss jumper that is used with test equipment to perform optical loss measurements. The MQJ must meet stringent optical loss requirements to ensure accuracy of measurements performed. Measurements must be accurate and repeatable. The accuracy and repeatability of your measurement is only as good as your MQJ. As the MQJ degrades with use, so does the measurement accuracy. The MQJ consists of a single fiber cable with a connector at one end which mates to the test equipment (optical source and power meter) and a connector at the other end which mates to the link/segment under test.

3.2 Test probe. A single fiber MQJ that is configured with a connector at one end to mate with the test equipment and a connector referred to as "test probe" at the other end. The test probe is test connector that is used to test one terminus at a time within a MIL-DTL-38999 connector. This test probe is inserted into the cavity of a test probe adapter. The test probe adapter is mated to the MIL-DTL-38999 connector.

3.3 Test probe adapter. An adapter that mates with the MIL-DTL-38999 multiple termini connector plug or the MIL-DTL-38999 connector receptacle under test and that contains the insert cavity configuration to mate with and lock a test probe in place.

3.4 Test terminus. A single fiber MQJ that is configured with a connector at one end to mate with the test equipment and a connector referred to as "test terminus" at the other end. The test terminus is test connector that is used to test one terminus at a time within a MIL-PRF-64266 connector. This test terminus is inserted into the cavity of a test terminus adapter. The test terminus adapter is mated to the MIL-PRF-64266 connector.

3.5 Test terminus adapter. An adapter that mates with the MIL-PRF-64266 multiple termini connector plug or the MIL-PRF-64266 connector receptacle under test and that contains the insert cavity configuration to mate with and lock a test terminus in place.

4. Requirements. Fiber optic supplemental items for optical loss testing shall be standardized for commonality compliance across platforms. Commonality compliance is that which bounds or restricts the support equipment to those recognized by the Joint Fiber Optic Working Group (JFOWG), cited in the General Series Technical Manual for Fiber Optic Cabling (NAVAIR 01-1A-505-1/T.O. 1-1A-14/TM 1-1500-232-24-4) and, as a result, cited in this Standard Practice.

4.1 Test adapters for multiple termini connectors.

4.1.1 General. Test adapters shall be configured to mate with the specified multiple termini connector. A plug type test adapter shall be used with the connector receptacle. A receptacle type test adapter shall be used with the connector plug.

4.1.2 MIL-DTL-38999 test probe adapters. Test probe adapters shall be utilized to connect to each type of MIL-DTL-38999 connector receptacle and plug used. Table 6205 – I lists the test probe adapters for commonly used connector configurations.
Other test probe adapter configurations may be needed to support "non-standard", platform specific M38999 connector configurations.

a. A different plug type test probe adapter is required for each connector receptacle shell size, insert type (cavity for pin or socket terminus) and insert arrangement.

b. A different receptacle type test probe adapter is required for each connector plug shell size, insert type (cavity for pin or socket terminus), insert arrangement and keying position.

REQUIREMENT 6205

Source: https://assist.dla.mil -- Downloaded: 2016-12-31T21:10Z
Check the source to verify that this is the current version before use.

TABLE 6205 – I. MIL-DTL-38999 Series III test probe adapter configurations.

Item number	Adapter type1/	Shell size	No. of insert cavities	Type terminus	Keying position	CAGE code	Part number 2/, 3/, 4/, 5/
6205AA	Plug	11	2	Pin	Normal	06324	180-044C06-11-2PN
6205AB	Receptacle	11	2	Socket	Normal	06324	180-044C07-11-2S
6205AC	Plug	13	4	Pin	Normal	06324	180-044C06-13-4PN
6205AD	Receptacle	13	4	Socket	Normal	06324	180-044C07-13-4S
6205AE	Plug	15	5	Pin	Normal	06324	180-044C06-15-5PN
6205AF	Receptacle	15	5	Socket	Normal	06324	180-044C07-15-5S
6205AG	Plug	17	8	Pin	Normal	06324	180-044C06-17-8PN
6205AH	Receptacle	17	8	Socket	Normal	06324	180-044C07-17-8S
6205AI	Plug	19	11	Pin	Normal	06324	180-044C06-19-11PN
6205AJ	Receptacle	19	11	Socket	Normal	06324	180-044C07-19-11S
6205AK	Plug	25	37	Pin	Normal	06324	180-044C06-25-37APN 6/
							180-044C06-25-37BPN
6205AL	Receptacle	25	37	Socket	Normal	06324	180-044C07-25-37AS 6/
							180-044C07-25-37BS
6205CA	Plug	17	8	Socket	Normal	06324	180-044C06-17-8S
6205CB	Receptacle	17	8	Pin	A	06324	180-044C06-17-8PA
6205CC	Plug	21	16	Pin	Normal	06324	180-044C06-21-16PN
6205CD	Plug	23	54	Pin	Normal	06324	180-044C06-23-54PN
6205CE	Receptacle	23	54	Socket	Normal	06324	180-044C07-23-54S
6205CF	Receptacle	23	54	Pin	Normal	06324	180-044C07-23-54P
6205CG	Receptacle	25	29	Socket	C	06324	180-044C07-25-29SC
6205CH	Plug	25	43	Pin	Normal	06324	180-044C06-25-43PN
6205CI	Receptacle	25	43	Socket	Normal	06324	180-044C07-25-43S

1/ Receptacle type test probe adapters are inserted into connector plugs. Plug type test probe adapters are inserted into connector receptacles.

2/ Part numbers are listed for receptacle type test probe adapters with keying position "N" unless otherwise indicated. The last character is left blank for a receptacle type test probe adapters with keying position "N". For an alternate keying position, revise the last (fifteenth) character in the part number from a "blank" to the required keying position. Keying positions for a MIL-DTL-38999 series III connector are for N (normal), A, B, C, D, E, F.

3/ Part numbers are listed for plug type test probe adapters with keying position "N" unless otherwise indicated. The last character is left blank for a plug type test probe adapters with a universal keying position. See notes 4/ and 5/ for restriction on use of the universal keying position. For other than a universal position, revise the last (fifteenth) character in the part number from a "blank" to the required keying position. Keying positions for a MIL-DTL-38999 Series III connector are N (normal), A, B, C, D, E, F.

4/ Plug adapters/plug type test probe adapters (i.e., test probe adapter configuration that is inserted into connector receptacles) with a universal keying position utilize only one male master key for keying (i.e., keying position). The universal keying position is less preferred due to degradation in optical performance. The advantage is that this "universal key": type plug adapters can be inserted into a receptacle with any keying option (N, A, B, C, D, E, F). Receptacle type test probe adapters cannot be manufactured with the universal keying position.

5/ The JFOWG restrict the use of plug type test probe adapters with the adapters with the universal keying position to legacy applications only. Looser tolerances found on plug adapters with the universal keying position can significantly impact optical loss measurements on single mode fiber sizes (and potentially smaller core multimode fiber sizes). If available (provided with support equipment), plug type test probe adapters with the universal keying position can inadvertently be used on single mode fiber sizes and other measurements where this universal keying position is not authorized.

6/ Two adapters are included with this designation number. The part number is modified to account for either an A or B as the fifteenth digit to account for the two adapters. The sixteenth digit (rather than the fifteenth digit) is used for alternate keying positions.

REQUIREMENT 6205

Source: https://assist.dla.mil -- Downloaded: 2016-12-31T21:10Z
Check the source to verify that this is the current version before use.

TABLE 6205 – I. MIL-DTL-38999 Series III test probe adapter configurations – Continued.

4.1.3 MIL-PRF-64266 test terminus adapter. One test terminus adapter is required is required for each type of connector receptacle and connector plug (one for the connector plug and one for the connector receptacle of each shell size). Table 6205-II lists the test terminus adapters for each shell size.

a. Design characteristics. Test terminus adapters for use with the MIL-PRF-64266 connector receptacles shall conform to MIL-PRF-64266/32. Test terminus adapters for use with the MIL-PRF-64266 connector plugs shall conform to MIL-PRF-64266/33.
b. Interfacing termini. The applicable MIL-PRF-29504 for use with this test terminus adapter are the MIL-PRF-29504/18 and MIL-PRF-29504/20 termini.
c. Part number. Test terminus adapter shall be marked with the PIN and the vendor part number.
d. Insert cavity marking. Insert cavity shall be marked with the cavity number. For shell sizes with two cavity configurations, the same cavity location shall be marked with both cavity numbers.

TABLE 6205-II. MIL-PRF-64266 test terminus adapter configurations.

Item number	Adapter type 1/	Shell size	No. of insert cavities 4/	ASR Provided	Keying position 2/	Cage code	Part number
6205EA	Plug	11	2, 4	No	N/A	53669	1021898-B2NGH
6205EB	Receptacle	11	2, 4	Yes	N/A	53669	1021898-B2YGH
6205GC	Plug 3/	13	6	No	N/A	53669	1021898-C2NGH
6205GD	Receptacle 3	13	6	Yes	N/A	53669	1021898-C2YGH
6205EC	Plug	15	8, 10	No	N/A	53669	1021898-D2NGH
6205ED	Receptacle	15	8, 10	Yes	N/A	53669	1021898-D2YGH
6205EE	Plug	23	36, 18	No	N/A	53669	1021898-H2NGH
6205EF	Receptacle	23	36, 18	Yes	N/A	53669	1021898-H2YGH

1/ Receptacle type connector probe adapters are inserted into plug connectors. Plug type connector probe adapters are inserted into receptacle connectors.
2/ Not applicable. Each connector problem adapter shall contain keying for all 12 keying positions.
3/ Less commonly used insert configurations (not JFOWG preferred for standardization reasons).
4/ Connectors with the same shell size and different number of insert cavities have the same insert cavity locations. For instance, this allows a shell size 11 test terminus adapter to be used with a connector having either a 2 or 4 cavity insert.

4.2 Construction, test probe adapter.

4.2.1 Metal housing. Aluminum with a finish of anodized aluminum is acceptable. Other configurations shall require approval by the Design Activity. Past practice was to specify aluminum with cadmium over electroless nickel. Currently, most platforms are prohibiting the use of a cadmium finish for new items and replacements.

4.2.2 Geometry of test probe adapters. Test probe adapter shall be intermateable with the applicable MIL-DTL-38999 Series I and III connector receptacle or plug.

a. Test probe adapter for each connector plug and connector receptacle shell size and insert arrangement shall have a keying arrangement for the specified clocking position.

b. Alignment sleeve. Split ceramic sleeve shall be used (when applicable).

c. Other metal parts. Corrosive resistant materials shall be used.

REQUIREMENT 6205

Source: https://assist.dla.mil -- Downloaded: 2016-12-31T21:10Z
Check the source to verify that this is the current version before use.

4.2.3 Geometry and design. Geometry and design shall ensure intermateability with the specified connector receptacles and plugs, the applicable MIL-PRF-29504 termini and the applicable test probe.

a. The MIL-DTL-38999 series III connector receptacles and plugs when MIL-PRF-29504/4 and MIL-PRF-29504/5 termini are used.

4.2.4 Design characteristics. Design characteristics are to perform the following functions:

a. The plug type, test probe adapter shall mate with both the specified test probe and specific multiple termini connector receptacle configuration.

b. The receptacle type, test probe adapter shall mate with both the specified test probe and specific multiple termini connector plug configuration.

c. The test probe adapter shall comply with the corresponding insert arrangement specified (such as MIL-STD-1560 for inserts used in MIL-DTL-38999 connectors).

d. The test probe adapter shall have a positive test probe retention mechanism to ensure that the test probe locks in place upon insertion.

e. The plug type, test probe adapter shall be designed to house the appropriate mating ceramic alignment sleeves as defined in MIL-PRF-29504.

f. The test probe adapter shall be designed to have a master key (or keyway) and specified polarization key (or keyway) to mate with the specified clocking key (keyway) position for the connector configuration.

4.2.5 Part number. Test probe adapters shall be marked with the vendor part number.

4.3 Reference adapters. Reference adapters shall conform to 4.3.1 to 4.3.3. Table 6205 - III lists the acceptable configuration for these adapters.

4.3.1 Types.

a. Reference adapter, test probe-to-test probe. This type reference adapter shall be used to mate two test-probe-to-test probe connectors.

b. Reference adapter, hybrid (or hybrid adapter). This type reference adapter shall be used to mate two single ferrule connectors with the same ferrule diameter, but different connector configuration) such as SC-to-ST adapter).

c. Reference adapter, stepped alignment sleeve. This type reference adapter shall be used to mate two connectors with different ferrule diameters (such as mating a test probe connector to a ST connector).

REQUIREMENT 6205

Source: https://assist.dla.mil -- Downloaded: 2016-12-31T21:10Z
Check the source to verify that this is the current version before use.

TABLE 6205 - III. Reference adapter configuration and vendor part number.

Item number	Vendor	CAGE code	Vendor part number
Reference adapters, test probe-to-test probe, M38999 and M64266			
6205MA	Glenair, Inc.	06324	180-043C
6205MB	Glenair, Inc.	06324	180-086C
Hybrid adapter, (SC-to-ST, SC-to-FC, FC-to-ST)			
6205MC	Tyco (SC-to-ST)	00779	5503638-1
6205MD	Tyco (SC-to-FC)	00779	502781-4
6205ME	Tyco (FC-to-ST)	00779	5503640-1
	NSN 5935-01-578-6650 (FC-to-ST)	031S7	F-FFDT-STFC-MMSX
Reference adapter, stepped alignment sleeve, 2.5 mm to 1.25 mm (.10 inch to .05 inch)			
6205MF	TBD	TBD	TBD
Reference adapter, stepped alignment sleeve, 2.5 mm to 1.58 mm (.10 inch to .0625 inch)			
6205MG	TBD	TBD	TBD
Reference adapter, stepped alignment sleeve, 1.25 mm to .1.58 mm (.05 inch to .0625 inch)			
6205MH	TBD	TBD	TBD
Reference/measurement adapter, ST-to-ST adapter, single mode/multimode			
6205MI	Tempo	0XY53	MST-S0
	Kitco	08RC6	0204-4070
Reference/measurement adapter, SC-to-SC adapter, single mode/multimode			
6205MJ	Kitco	08RC6	0200-2460
Reference/measurement adapter, LC-to-LC adapter, single mode/multimode			
6205MK	Kitco	08RC6	0200-6320
Hybrid adapter, ST-to-LC adapter, single mode/multimode			
6205ML	NSN 5935-01-578-6651 (ST-to-LC)	031S7	F-FDT-STLC-MMSMSX

4.3.2 Construction of reference adapter, test probe-to-test probe.

a. Metal housing. Aluminum, stainless steel or nickel plated brass are acceptable. Other configurations shall require approval by the Design Activity.

b. Optical performance. Test probe - to- test probe interface loss shall not exceed the specified dB limit listed in table 6207 - I.

c. Alignment sleeve. Split ceramic sleeve shall be used.

d. Other metal parts. Corrosive resisting materials shall be used.

e. Geometry and design shall be intermateabel with the specified test probe for the applicable MIL-PRF-29504 termini.

f. Design characteristics shall be incorporated to perform the following functions:

(1) The reference adapter shall be designed to mate two of the same type test probes.

(2) The reference adapter shall have a positive test probe retention mechanism to ensure that the test probe locks in place upon insertion.

(3) The reference adapter shall be designed to house the appropriate mating ceramic alignment sleeves as defined in MIL-PRF-29504.

Source: https://assist.dla.mil -- Downloaded: 2016-12-31T21:10Z
Check the source to verify that this is the current version before use.

4.3.3 Part number. When specified, vendor part number shall be marked on the reference adapter.

4.4 Measurement adapters. Measurement adapters shall conform to 4.3.1 to 4.3.3. Table 6205-IV lists the acceptable configurations for these measurement adapters.

TABLE 6205 – IV. Measurement adapter configuration and vendor PIN.

Item number	Configuration	CAGE code	Vendor part number
6205NA	Measurement adapter, test probe-to-M29504/4 pin terminus	06324	180-049C
6205NB	Measurement adapter, test probe-to-M29504/5 socket terminus	06324	180-050C

4.4.1 Type.

a. Measurement adapter, terminus-to-test probe. This type measurement adapter shall be used to mate terminus-to-test probe connectors.

4.4.2 Construction of measurement adapter, test probe-to-test probe.

a. Metal housing. Aluminum, stainless steel or nickel plated brass are acceptable. Other configurations shall require approval by the design activity.

b. Optical performance. Test probe–to-test probe interface loss shall not exceed the specified dB listed in table 6207 - I. .

c. Alignment sleeve. Split ceramic sleeve shall be used.

d. Other metal parts. Corrosive resisting materials shall be used.

e. Geometry and design shall be intermateable with the specified test probe. For instance, the test probe for the MIL-DTL-38999 Series III connector receptacles and plugs shall be intermateable with MIL-PRF-29504/4 and MIL-PRF-29504/5 termini.

4.4.3 Design characteristics. Design characteristics shall be incorporated to perform the following functions:

a. The measurement adapter shall be designed to mate two of the same type test probes.

b. The measurement adapter shall have a positive test probe retention mechanism to ensure that the test probe locks in place upon insertion.

c. The measurement adapter shall be designed to house the appropriate mating ceramic alignment sleeves as defined in MIL-PRF-29504.

4.4.4 Part number. When specified, vendor part number shall be marked on the measurement adapter.

REQUIREMENT 6205

Source: https://assist.dla.mil -- Downloaded: 2016-12-31T21:10Z
Check the source to verify that this is the current version before use.

4.5 Attenuators. Attenuators provided shall be those listed in table 6205 – V.

TABLE 6205 - V. Attenuators and vendor part number.

Item number	Configuration	CAGE code	Vendor part number
6205PA	Attenuator, MM, fixed, -3 dB, 850 nm, ST interface	4TA86	ATP-STU-03-62-85
6205PB	Attenuator, MM, fixed, -3 dB, 1,300 nm, ST interface	4TA86	ATP-STU-03-62-13
6205PC	Attenuator, SM, fixed, -3 dB, 1,550 nm, ST interface	4TA86	ATP-STU-03-SM

5. Implementation. Unless otherwise specified by the applicable Platform Office, fiber optic supplemental items used shall be restricted to those in table 6205 – I through table 6205 - V. These fiber optic supplemental items are used for optical loss testing for a fiber optic cable harness, those to transition to end user equipment interfacing with the cable harness, and those on patch cords.

6. Notes.

6.1 Intended use. The supplemental equipment provides the cabling interface connections used when measuring the optical performance for fiber optic cabling that are a part of (1) cable harnesses, (2) fiber optic test jumpers, and (5) other miscellaneous cabling.

6.2 Use of and listing for supplemental items. Further elaboration for identifying the use of the supplemental items and the location of a table for each type supplemental item is provided in 6.2.a through 6.2.e.

a. Types of MQJ's. MQJ configurations are addressed in Requirement 6207. Refer to materials table in WP 009 01 of NAVAIR 01-1A-505-4/T.O. 1-1A-14-4/TM 1-1500-323-24-4 for examples of MQJ configurations used.

b. Types of test probe adapters. Test probe adapters are used with MQJ configurations that have test probe connectors on one end. MIL-STD-1678 designations for the test probe adapters are listed in table 6205 – I for MIL-DTL-38999 connectors. Cross reference of the test probe adapter to a MIL-DTL-38999 connector is listed in table 6205A – I in appendix A.

c. Types of test terminus adapters. Test terminus adapters are used with MQJ configurations that have test terminus connectors on one end. MIL-STD-1678 designations for the test terminus adapters are listed in table 6205-II for MIL-PRF-64266 connectors. Cross reference of the test terminus adapter to a MIL-PRF-64266 connector is listed in table 6205A-II in appendix A.

d. Types of reference adapters. Reference adapters are used in the second power measurement step during an optical loss measurement when the two-jumper method is performed. The applicable configuration, reference adapter is used to mate two MQJ's. Reference adapters are listed in table 6205 - III.

e. Types of measurement adapters. Measurement adapters are used in the test measurement step during an optical loss measurement. The applicable configuration, measurement adapter is used to mate two MQJ's. Measurement adapters are listed in table 6205 – IV.

f. Attenuators. Attenuators are used to verify adequate operation of the optical source and power meter used as a system in performance of the optical loss measurement. The applicable attenuators are listed in table 6205 - V.

Source: https://assist.dla.mil -- Downloaded: 2016-12-31T21:10Z
Check the source to verify that this is the current version before use.

TEST ADAPTER CROSS REFERENCE TO THE MULTIPLE TERMINI CONNECTOR

A.1 Intent.

A.1.1 Connector cross reference. A table is provided for the MIL-DTL-38999 Series III connector and for the MIL-PRF-64266 connector to cross reference the test probe adapter or test terminus adapter to the applicable connector configuration.

A.2 Applicable documents.

A.2.1 General. The documents listed in this section are specified in A3 of this standard practice. This section does not include comments cited in other sections of this standard practice or recommended for additional information or as examples. While every effort has been made to ensure the completeness of this list, document users are cautioned that they must meet all specified requirements of documents cited in section A.3 of this standard practice, whether of not they are listed.

A.2.2 Government documents.

A.2.2.1 Specifications, standards and handbooks. The following specifications, standards and handbooks form a part of this document to the extent specified herein. Unless otherwise specified, the issues of the documents are those cited in the solicitation or contract.

DEPARTMENT OF DEFENSE SPECIFICATIONS

MIL-PRF-64266- Connectors, Fiber Optic, Circular and Rectangular, Plug and Receptacle Style, Multiple Removable Genderless Termini, Environment Resisting General Specification for

MIL-DTL-38999- Connectors, Electrical, Circular, Miniature, High Density, Quick Connect, (Bayonet Threaded and Breech Coupling), General Specification for.

(Copies of these documents are available online at http://quicksearch.dla.mil or from the Standardization Document Order Desk, 700 Robbins Avenue, Building 4D, Philadelphia, PA 19111-5094.)

A.2.3 Order of precedence. Unless otherwise noted herein or in the contract, in the event of a conflict between the text of this document and the references cited herein, the text of this document takes precedence. Nothing in this document, however, supersedes applicable laws and regulations unless a specific exemption has been obtained.

A.3 Part number cross reference.

A.3.1 MIL-DTL-38999 (M38999) connector. Table 6205A – I lists applicable MIL-DTL-38999 Series III military part numbers to the item number for the test probe adapter.

A.3.2 MIL-PRF-64266 (M64266) connector. Table 6205A-II lists the applicable MIL-PRF-64266 military part numbers to the item number for the test terminus adapter.

Source: https://assist.dla.mil -- Downloaded: 2016-12-31T21:10Z
Check the source to verify that this is the current version before use.

TABLE 6205A – I. Applicable MIL-DTL-38999 connector for each test probe adapter.

Item number for test probe adapter	PIN MIL-DTL-38999 connector(s)
6205AA	D38999/20WB2SN
6205AB	D38999/26WB2PN
6205AC	D38999/20WC4SM
6205AD	D38999/26WD4SN
6205AE	D38999/20WD5SN
6205AF	D38999/26WD5PN
6205AG	D38999/20WE8SN
6205AH	D38999/26WE8PN
6205AI	D38999/20WF11FN
6205AJ	D38999/26WF11PN
6205AK	D38999/20WJ37SN
6205AL	D38999/26WJ37PN
6205CA	D38999/20WE8PA
6205CB	D38999/26WE8SA
6205CC	D38999/20WG16SN
6205CD	D38999/20WH54SN
6205CE	D38999/26WH54PN
6205CF	D38999/26WJ29N
6205CG	D38999/20WJ29PC
6205CH	D38999/20WJ43SN
6205CI	D38999/26WJ43PN

TABLE 6205A-II. Applicable MIL-PRF-64266 Connector for each test terminus adapter.

Item number for test terminus adapter	PIN for connector plug	Description for connector plug	PIN for connector receptacle	Description for connector receptacle
6205EA	M64266/2-B1NN12A	Shell size 11, 2 cavities	Not Applicable	Not Applicable
	M64266/2-B2NN12A	Shell size 11, 4 cavities	Not Applicable	Not Applicable
6205EB	Not Applicable	Not Applicable	M64266/1-B1NY12A	Shell size 11, 2 cavities
	Not Applicable	Not Applicable	M64266/1-B2NY12A	Shell size 11, 4 cavities
6205GC	M64266/2-C2NN12A	Shell size 13, 6 cavities	Not Applicable	Not Applicable
6205GD	Not Applicable	Not Applicable	M64266/1-C1NY12A	Shell size 13, 6 cavities
6205EC	M64266/2-D1NN12A	Shell size 15, 8 cavities	Not Applicable	Not Applicable
	M64266/2-D2NN12A	Shell size 15,10 cavities	Not Applicable	Not Applicable
6205ED	Not Applicable	Not Applicable	M64266/2-D1NY12A	Shell size 15, 8 cavities
	Not Applicable	Not Applicable	M64266/2-D2NY12A	Shell size 15,10 cavities
6205EE	M64266/2-H1NN12A	Shell size 23,36 cavities	Not Applicable	Not Applicable
6205EF	Not Applicable	Not Applicable	M64266/1-H1NY12A	Shell size 23,36 cavities

Source: https://assist.dla.mil -- Downloaded: 2016-12-31T21:10Z
Check the source to verify that this is the current version before use.

CONNECTOR ACCESSORIES ASSEMBLY AND REPAIR TOOLS AND EQUIPMENT

1. Purpose. This requirement refines or bounds (constrains) the selection of the fiber optic support equipment (SE) consisting of the tools and equipment required for the assembly and repair of connector accessories. Included in these tools and equipment are the tools to assemble a backshell onto a multiple termini connector, terminus termination insertion and removal tools, adapters used during the connector accessories assembly and connector assembly consumable supplies. This requirement is intended for developmental, prototype, production, rework and modification programs on military platform fiber optic cable assemblies.

2. Applicable documents.

2.1 General. The documents listed in this section are specified in sections 3, 4, and 5 of this standard practice. This section does not include documents cited in other sections of this standard practice or recommended for additional information or as examples. While every effort has been made to ensure the completeness of this list, document users are cautioned that they must meet all specified requirements of documents cited in sections 3, 4, and 5 of this standard practice, whether or not they are listed.

2.2 Government documents.

2.2.1 Specifications, standards, and handbooks. The following specifications, standards, and handbooks form a part of this document to the extent specified herein. Unless otherwise specified, the issues of these documents are those cited in the solicitation or contract.

DEPARTMENT OF DEFENSE SPECIFICATIONS

MIL-PRF-29504/4-	Termini, Fiber Optic, Connector, Removable, Environment Resisting, Pin Terminus, Size 16, Rear Release, MIL-DTL-38999, Series III.
MIL-PRF-29504/5-	Termini, Fiber Optic, Connector, Removable, Environment Resisting, Socket Terminus, Size 16, Rear Release, MIL-DTL-38999, Series III.
MIL-PRF-29504/18-	Termini, Fiber Optic, Connector, Removable, Environment Resisting, Genderless Terminus, Rear Release, Ceramic Ferrule, 1.25 MM Ferrule, (for MIL-PRF-64266 Connectors).
MIL-PRF-64266-	Connectors, Fiber Optic, Circular and Rectangular, Plug and Receptacle Style, Multiple Removable Genderless Termini, Environment Resisting General Specification for
MIL-DTL-38999-	Connectors, Electrical, Circular, Miniature, High Density, Quick Disconnect, (Bayonet Threaded and Breech Coupling), General Specification for.

(Copies of these documents are available online at http://quicksearch.dla.mil or from the Standardization Document Order Desk, 700 Robbins Avenue, Building 4D, Philadelphia, PA 19111-5094.)

2.3 Other Government documents, drawings, and publications. The following other Government documents, drawings, and publications form a part of this standard practice to the extent specified herein. Unless otherwise specified, the issues are these documents are those cited in the solicitation or contract.

NAVAIR 01-1A-505-4/ T.O. 1-1A-14-4/TM1-1500-232-24-4-	Installation and Testing Practices, Aircraft Fiber Optic Cabling.

(A copy of this document is available online at: https://mynatec.navair.navy.mil. NATEC has three difference processes to obtain the manual, depending on if you are Government personnel (military and civilians), Contractors with a Government contract, or everyone else. If unable to access this Web Site or require further assistance, contact (1) NATEC Customer Service: 619.545.1888, (2) NATEC Website Status Hotline: 619.545.1706, or (3) NATEC Customer Service E-mail: nani_customerservice@navy.mil.)

2.4 Order of precedence. Unless otherwise noted herein or in the contract, in the event of a conflict between the text of this document and the references cited herein, the text of this document takes precedence. Nothing in this document, however, supersedes applicable laws and regulations unless a specific exemption has been obtained.

Source: https://assist.dla.mil -- Downloaded: 2016-12-31T21:10Z
Check the source to verify that this is the current version before use.

3. Definitions.

3.1 Adapter tool. An adapter that mates with the multiple termini connector plug or the connector receptacle under assembly and along with a ratchet or T-handle holds the front of the connector from turning while tightening the backshell or EMI retention nut in place.

3.2 Backshell, fiber optic. The shroud or protective structure placed on the cable entry end of the multiple termini connector that provides mechanical protection of the fiber optic cable at the exit (cable entry end) of the connector. For protective cable harnesses with single fiber cabling, the backshell is used to interface the protective covering or cable strain relief of the cable harness with the connector. The backshell is also used to provide a degree of environmental sealing, depending upon the specific design.

3.3 Banding strap. A stainless steel, adjustable, tie-down band used to secure cable wrap to the banding platform of the backshell rear adapter. The banding strap includes a self-clinching clamp to hold the band in place in the longitudinal (long) direction.

3.4 EMI retention nut, fiber optic. A component placed on the cable entry end of the multiple termini connector in lieu of a backshell to provide environmental protection from entry or penetration of electromagnetic radiation. A common application for an EMI retention nut is one used in conjunction with a connector receptacle at the panel of an equipment module.

4. Requirements. Fiber optic support equipment (SE) for the tools, adapters, and consumable supplies used to assemble and repair fiber optic connector accessories shall be standardized for commonality compliance across platforms. Commonality compliance is that which bounds or restricts the support equipment to those recognized by the Joint Fiber Optic Working Group (JFOWG), cited in the General Series Technical Manual for Fiber Optic Cabling (NAVAIR 01-1A-505-1/T.O. 1-1A-14/TM 1-1500-232-24-4) and, as a result, cited in this Standard Practice.

5. Implementation. Unless otherwise specified by the applicable Platform Office, tools, adapters, and consumable supplies used to assemble and repair fiber optic connector accessories shall be restricted to those in table 6206 – I through table 6206-V.

TABLE 6206 – I. Connector accessories assembly tools.

Item	Description 1/	Quantity	Cage code	Part number
6206AA	Torque wrench, 0 – 22.6 N m (0 – 200 inch-pound), .952 mm (.375 inch) square drive socket, NSN 5120-001-335-8178	1	11851	BT-ST-751
6206AB	Adapter, square drive socket, torque wrench, .952 mm to .10 mm (3/8 inch to 1/4 inch)	1	11851	BT-D-0551
6206AC	Strap wrench, rated > 22.6 N m (200 inch-pound), .shell sizes 11 to 25	1	11851	BT-BS-609B
6206AE	Heat gun, compressed air/nitrogen, for explosive environments	1	06090	HT-900B
			06090	HT-920B
			0FN27	HT-71002
6206AF	Heat gun, self-contained, battery powered 2/	1	1DLV6	MCH-100-A
6206AG	Heat gun, self-contained, battery powered (improved battery management) 2/	1	1DLV6	MCH-100-A-1
6206AH	Adjustable wrench, 203.2 mm (8 inches)	1		NSN 5120-01-335-2217
6206AI	T-handle, 9.52 mm (.375 inches) square drive socket	1	11851	BT-HT-107
6206AJ	Adapter tool set, plug, MIL-DTL-38999 Series III	1	11851	CM-S-389T, See table 6206-III
6206AK	Adapter tool set, receptacle, MIL-DTL-38999 Series III	1	11851	CM-S-389TR, See table 6206-III
6206AL	Banding adapter tool, hand operated, .10 mm (.250 inch) banding straps	1	11851	DBS-1100
6206AM	Adjustable wrench, 152.4 mm (6 inches)	1		NSN 5120-01-335-2216
6206AN	Wrench set, open end .10 mm to 23.83 mm ¼" to 15/16" sizes (6 pcs.) 3/	1		NSN 5120-01-428-8601
6206ANA	Wrench, open end, standard length, 9.52 mm x 11.13 mm 3/8"x 7/16"			NSN 5120-01-335-1185
6206ANB	Wrench, open end, standard length, .11.13 mm x 12.7 mm 7/16" x ½"			NSN 5120-01-335-1186
6206ANC	Wrench, open end, standard length, .12.7 mm x 14.27 mm ½" x 9/16"			NSN 5120-01-335-1187

See footnotes at end of table.

Source: https://assist.dla.mil -- Downloaded: 2016-12-31T21:10Z
Check the source to verify that this is the current version before use.

TABLE 6206-I. Connector accessories assembly tools.

Item	Description 1/	Quantity	Cage code	Part number
6206AND	Wrench, open end, standard length, 14.27 mm x 15.88 mm 9/16" x 5/8"			NSN 5120-01-335-1188
6206ANE	Wrench, open end, standard length, 15.88 mm x 17.48 mm 5/8" x 11/16"			NSN 5120-01-335-1189
6206ANF	Wrench, open end, standard length, 15.88 mm x 19.05 mm 5/8" x ¾"			NSN 5120-01-335-1190
6206ANG	Wrench, open end, standard length, 17.48 mm x 19.05 mm 11/16" x ¾"			NSN 5120-01-335-1191
6206ANH	Wrench, open end, standard length, 19.05 mm x 20.62 mm ¾" x 13/16"			NSN 5120-01-335-1192
6206ANI	Wrench, open end, standard length, 19.05 mm x 22.23 mm ¾" x 7/8"			NSN 5120-01-335-1214
6206ANJ	Wrench, open end, standard length, 20.62 mm x 22.23 mm 13/16" x 7/8"			NSN 5120-01-335-1014
6206ANK	Wrench, open end, standard length, 22.23 mm x 23.83 mm 7/8" x 15/16"			NSN 5120-01-335-1215
6206ANL	Wrench, open end, standard length, 23.83 mm x 25.4 mm 15/16" x 1"			NSN 5120-01-335-1216
6206AO	Wrench set, open end, 6.35 mm x 41.28 mm ¼" to 1-5/8" sizes (20 pcs.) Alternate: Select from items 6026ANA through ANL 3/	1		NSN 5120-01-428-8521
6206AP	Crow foot wrench set, 3/8 drive, 9.52 mm to 25.4 mm 3/8" to 1"sizes open end (11 pcs.) Alternate: Select from items 6206APA through APL 4/	1		NSN 5120-01-429-1101
6206APA	Crow foot wrench, 3/8 drive, 9.52 mm 3/8", open end			NSN 5120-01-335-1149
6206APB	Crow foot wrench, 3/8 drive, 11.13 mm 7/16", open end			NSN 5120-01-335-1092
6206APC	Crow foot wrench, 3/8 drive, .12.7 mm ½", open end			NSN 5120-01-335-1093
6206APD	Crow foot wrench, 3/8 drive, .14.27 mm 9/16", open end			NSN 5120-01-335-1094
6206APE	Crow foot wrench, 3/8 drive, 15.88 mm 5/8", open end			NSN 5120-01-335-1095
6206APF	Crow foot wrench, 3/8 drive, 17.48 mm 11/16", open end			NSN 5120-01-335-1096
6206APG	Crow foot wrench, 3/8 drive, 19.05 mm ¾", open end			NSN 5120-01-335-1097
6206APH	Crow foot wrench, 3/8 drive, 20.62 mm 13/16", open end			NSN 5120-01-335-1098
6206API	Crow foot wrench, 3/8 drive, 22.23 mm 7/8", open end			NSN 5120-01-335-1099
6206APJ	Crow foot wrench, 3/8 drive, 23.83 mm 15/16", open end			NSN 5120-01-335-1100
6206APK	Crow foot wrench, 3/8 drive, 25.4 mm 1", open end			NSN 5120-01-335-1101
6206AQ	Key set, socket head screw, hex 1.27 mm to 9.52 mm (.050 inch to 3/8" inch) (13 pcs.) Alternate: Select from items 6206AQA – AQD, AR, AS 5/	1		NSN 5120-01-335-1509
6206AQA	Key, socket head screw, hex, 1.98 mm 5/64"			NSN 5120-01-335-2101
6206AQB	Key, socket head screw, hex, 3.18 mm 1/8"			NSN 5120-01-335-2115
6206AQC	Key, socket head screw, hex 3.58 mm 9/64"			NSN 5120-01-335-2116
6206AQD	Key, socket head screw, hex, 3.96 mm 5/32"			NSN 5120-01-335-2117
6206AR	Key, socket head screw, hex, 2.39 mm 3/32"	1		NSN 5120-01-335-2102
6206AS	Key, socket head screw, hex, 2.77 mm 7/64"	1		NSN 5120-01-335-2114
6206AT	Socket wrench attachment, 1/4 inch drive, hex, 2.39 mm 3/32"	1		NSN 5120-01-367-3504
6206AU	Socket wrench attachment, 1/4 inch drive, hex, 2.77 mm 7/64"	1		NSN 5120-01-367-3505
6206AV	Key set, socket head screw, hex, ball end, 1.98 mm to 4.78 mm 5/64" to 3/16", (7pieces) Alternative to 6206AQ 6/			NSN 5120-01-355-2055
6206AW	Individual cable installation tool, to thread cable under spot ties, P/N WHS-1	1	11851	NSN 5895-01-598-1301

1/ See Requirement 6108.
for binding and holding components such as heat shrinkable insulation sleeving and banding straps.
2/ Alternative to 6206AE.
3/ Alternate: Select from items 6206ANA through ANL.
4/ Alternate: Select from items 6206APA through APL.
5/ Alternate: Select from items 6206AQA - AQD, AR, AS.
6/ Alternative to 6206AQ.

Source: https://assist.dla.mil -- Downloaded: 2016-12-31T21:10Z
Check the source to verify that this is the current version before use.

TABLE 6206-II. Terminus insertion and removal tools.

Item	Description	Quantity	CAGE code	Part number
6206CA	Insert tool, for MIL-PRF-29504/18 and MIL-PRF-29504/20 termini	1	53669	1093784S
			08RC6	07-1-3820
			0YPM2	FSTF0076
			06324	182-023
			71468	274-0058-001
6206CB	Insert tool, 90 degrees, for MIL-PRF-29504/18 and MIL-PRF-29504/20 termini	1	53669	1143042-2S
			08RC6	07-1-3810
			0YPM2	FSTS0077
			06324	182-024
6206CC	Removal tool, for MIL-PRF-29504/18 and MIL-PRF-29504/20 termini	1	53669	1021238H
			0YPM2	FSTS1411-1
			06324	182-025
			71468	274-0058-000
6206CD	ASR assembly tool for alignment sleeve retainer, for MIL-PRF-64266 connector	1	53669	1021280H
			0YPM2	FSTS1006-1
			06324	182-026
6206CE	Insertion tool, metal, MIL-PRF-29504/4 and MIL-PRF-29504/5	1	81349	M81969/8-07
6206CF	Insertion & removal tool, plastic, MIL-PRF-29504/4 & MIL-PRF-29504/5	3	81349	M81969/14-03
6206CG	Removal tool, metal, MIL-PRF-29504/4 and MIL-PRF-29504/5	1	81349	M81969/8-08
6206CH	Termini assist removal tool for M29504/4 and MIL-PRF-29504/5 (optional) 1/	1	08RC6	0721-1150
6206CI	Removal tool, tweezers style for MIL-PRF-29504/18 and MIL-PRF-29504/20 termini	1	08RC6	0701-3855

1/ The termini assist removal tool is used in conjunction with the rear release removal (extraction) tool. The termini assist tool has one end for the M29504/4 pin terminus and the other end is for the M29504/5 socket terminus. The termini assist tool pushes the pin or socket termini, from the front side of the connector, up above the internal locking ring after the removal tool is fully seated.

Source: https://assist.dla.mil -- Downloaded: 2016-12-31T21:10Z
Check the source to verify that this is the current version before use.

TABLE 6206-III. MIL-DTL-38999 series III adapter tool selection.

Shell size	Item number	Color coding 1/	Keying position	Individual tool part number 2/	CAGE code
11	6206EA	Yes	N,D,E	BT-389T-11A	11851
		No	N	600H005-11PN	06342
		No	D	600H005-11PD	06342
		No	E	600H005-11PE	06342
13	6206EB	Yes	N,D,E	BT-389T-13A	11851
		No	N	600H005-13PN	06342
		No	D	600H005-13PD	06342
		No	E	600H005-13PE	06342
15	6206EC	Yes	N,D,E	BT-389T-15A	11851
		No	N	600H005-15PN	06342
		No	D	600H005-15PD	06342
		No	E	600H005-15PE	06342
17	6206ED	Yes	N,A,B	BT-389T-17A	11851
		No	N	600H005-17PN	06342
		No	A	600H005-17PA	06342
		No	B	600H005-17PB	06342
19	6206EE	Yes	N,A,B	BT-389T-19A	11851
		No	N	600H005-19PN	06342
		No	A	600H005-19PA	06342
		No	B	600H005-19PB	06342
21	6206EF	Yes	N,A,B	BT-389T-21A	11851
		No	N	600H005-21PN	06342
		No	A	600H005-21PA	06342
		No	B	600H005-21PB	06342
23	6206EG	Yes	N,A,B	BT-389T-23A	11851
		No	N	600H005-23PN	06342
		No	A	600H005-23PA	06342
		No	B	600H005-23PB	06342
25	6206EH	Yes	N,A,B	BT-389T-25A	11851
		No	N	600H005-25PN	06342
		No	A	600H005-25PA	06342
		No	B	600H005-25PB	06342
11	6206EI	Yes	A,B,C	BT-389T-11B	11851
		No	A	600H005-11PA	06342
		No	B	600H005-11PB	06342
		No	C	600H005-11PC	06342
13	6206EJ	Yes	A,B,C	BT-389T-13B	11851
		No	A	600H005-13PA	06342
		No	B	600H005-13PB	06342
		No	C	600H005-13PC	06342
15	6206EK	Yes	A,B,C	BT-389T-15B	11851
		No	A	600H005-15PA	06342
		No	B	600H005-15PB	06342
		No	C	600H005-15PC	06342
17	6206EL	Yes	C,D,E	BT-389T-17B	11851
		No	C	600H005-17PC	06342
		No	D	600H005-17PD	06342
		No	E	600H005-17PE	06342
19	6206EM	Yes	C,D,E	BT-389T-19B	11851
		No	C	600H005-19PC	06342
		No	D	600H005-19PD	06342
		No	E	600H005-19PE	06342
21	6206EN	Yes	C,D,E	BT-389T-21B	11851
		No	C	600H005-21PC	06342
		No	D	600H005-21PD	06342
		No	E	600H005-21PE	06342

See footnotes at end of table.

Source: https://assist.dla.mil -- Downloaded: 2016-12-31T21:10Z
Check the source to verify that this is the current version before use.

TABLE 6206-III. MIL-DTL-38999 series III adapter tool selection – Continued.

Shell size	Item number	Color coding 1/	Keying position	Individual tool part number 2/	CAGE code
23	6206EO	Yes	C,D,E	BT-389T-23B	11851
		No	C	600H005-23PC	06342
		No	D	600H005-23PD	06342
		No	E	600H005-23PE	06342
25	6206EP	Yes	C,D,E	BT-389T-25B	11851
		No	C	600H005-25PC	06342
		No	D	600H005-25PD	06342
		No	E	600H005-25PE	06342

1/ For parts from CAGE Code 11851, each part provided is color coded "Lavender". For parts from CAGE Code 06342, each part is not color coded and is provided with a metallic finish.

2/ For parts from CAGE Code 06342, substitute a "R" instead of a "P" in each part number if a receptacle holder is required instead of a plug holder. Parts from CAGE Code 11851 are for plug holder adapter tools only.

TABLE 6206-IV. MIL-PRF-64266 adapter tool selection.

Item number	Shell size	Color coding	Keying position	Individual tool part number 1/	CAGE code
6206GA	11	No	All 12	CM642-11	11851
6206GB	13	No	All 12	CM642-13	11851
6206GC	15	No	All 12	CM642-15	11851
6206GD	23	No	All 12	CM642-23	11851

1/ Parts from CAGE code 11851 are for plug holder adapter tools only.

TABLE 6206-V. Connector assembly consumable supplies.

Item	Description	Quantity	Cage code	Part number
6206JA	Knife, utility, metal, retractable, adjustable push button, with heavy duty blade, NSN 5110-01-538-3943	1	2E624	X3274
6206JB	Handle, surgical knife, detachable blade, size 9, narrow nose (for use with 6206JC and 6206JD), NSN 6515-00-344-7920	1	00WU8	
6206JC	Blade, surgical knife, detachable # 11, sterile, straight taper, pack of 6 blades, NSN 6515-00-660-0010	1	00WU8	
6206JD	Blade, surgical knife, detachable # 15, sterile, curved taper, pack of 6 blades, NSN 6515-00-660-0010	1	00WU8	
	Cleaning consumable supplies 1/			
	Cable assembly consumable supplies 2/			

1/ Cleaning supplies are listed in Requirement 6201.

2/ Tape, heat shrink sleeving, banding straps and other materials used for cabling assembly are listed in table 6108 – I of Requirement 6108.

6. Notes.

6.1 Intended use. On these platforms, the fiber optic tools, adapters, and consumable supplies intended to be used to assemble and repair fiber optic connector accessories on (1) cable harnesses, (2) fiber optic test jumpers, and (3) other miscellaneous cabling.

REQUIREMENT 6206

Source: https://assist.dla.mil -- Downloaded: 2016-12-31T21:10Z
Check the source to verify that this is the current version before use.

MEASURE QUALITY JUMPERS

1. Purpose. This requirement refines or bounds (constrains) the selection of the fiber optic support equipment (SE) Measurement Quality Jumpers (MQJ) used to perform the optical loss measurement and the OTDR measurement. This requirement addresses the general construction of and different configurations for the MQJ. This requirement is intended for developmental, prototype, production, rework and modification programs on military platform fiber optic cable assemblies.

1.1 Supplemental, general construction requirements. The MQJ is a fiber optic test jumper or cable that conforms to the low loss optical and other requirements specified herein. The MQJ is used with test equipment including the performance of optical loss measurements using an optical source and power meter and including OTDR measurements.

a. MQJ configurations for optical loss measurements. Each MQJ is configured as single fiber cable with a connector at one end that mates to the test equipment and a connector at the other end which mates to the link/segment under test. The MQJ is used to test one channel at a time on the cable link/segment under test. For a multiple termini connector, a test probe for a MIL-DTL-38999 connector) or a test terminus (for a MIL-PRF-64266 connector) is placed on the end of the MQJ that mates with a terminus in a multiple termini connector. A test probe adapter (for a MIL-DTL-38999 connector) or a test terminus adapter (for a MIL-PRF-64266 connector), which is screwed onto the multiple termini connector, is addressed under Support Equipment (SE) in Requirement 6205.

b. MQJ configurations for OTDR measurements. For an OTDR measurement taken with the high resolution module (such as a module with a nominal 10 centimeter (3.94 inch) or less dead zone), a MQJ with the 2 meter (6.56 foot) length is used. For an OTDR measurement taken using a standard resolution module (i.e., a module with a 3 meter (9.84 foot) to 15 meter (49.2 foot) dead zone), a MQJ with a 50 meter (164 foot) length is used. These measurements are performed on fiber optic cable links (fiber optic cable run between equipment modules/boxes) that may consist of one or more segments (cabling with connectors on both ends). This testing is performed to verify optical performance of installed cable, to characterize the cabling geometry, or to troubleshoot the cable links. To avoid confusion between the 2 meter (6.56 foot) and 50 meter (164 foot) lengths, MQJ configurations with a 2 meter (6.56 foot) length are placed in appendix A whereas those with a 50 meter (164 foot) length are in appendix B.

c. Measurement accuracy. The MQJ must meet stringent optical loss requirements to ensure accuracy of measurements performed. Measurements made must be accurate and repeatable. For an optical loss measurement, the accuracy and repeatability of your optical loss measurement is only as good as your MQJ. As the MQJ degrades with use, so does the measurement accuracy.

2. Applicable documents.

2.1 General. The documents listed in this section are specified in sections 3, 4, and 5 of this standard practice. This section does not include documents cited in other sections of this standard practice or recommended for additional information or as examples. While every effort has been made to ensure the completeness of this list, document users are cautioned that they must meet all specified requirements of documents cited in sections 3, 4, and 5 of this standard practice, whether or not they are listed.

2.2 Government documents.

2.2.1 Specifications, standards, and handbooks. The following specifications, standards, and handbooks form a part of this document to the extent specified herein. Unless otherwise specified, the issues of these documents are those cited in the solicitation or contract.

Source: https://assist.dla.mil -- Downloaded: 2016-12-31T21:10Z
Check the source to verify that this is the current version before use.

DEPARTMENT OF DEFENSE SPECIFICATIONS

MIL-PRF-29504/4-	Termini, Fiber Optic, Connector, Removable, Environment Resistng, Pin Terminus, Size 16, Rear Release, MIL-DTL-38999, Series III.
MIL-PRF-29504/5-	Termini, Fiber Optic, Connector, Removable, Environment Resisting, Socket Teminus, Size, 16, Rear Release, MIL-DTL-38999, Series III.
MIL-PRF-29504/14-	Termini, Fiber Optic, Connectore, Removable, Environment Resisting, Pin Terminus, Front Rellease, Ceramic Ferrule, (for MIL-C-28876 Connectors.)
MIL-PRF-29504/18-	Termini, Fiber Optic, Connector, Removable, Environment Resisting, Genderless Terminus, Rear Release, Ceramic Ferrule, 1.25 MM Ferrule, (for MIL-PRF-64266 Connectors).
MIL-PRF-29504/20-	Test terminus, Fiber Optic, Keyed, Connector, Removable, Environment Resisting, Genderless Terminus, Rear Insert/Rear Release, 1.25 mm Ceramic Ferrule, (for MIL-PRF-64266 Connectors).
MIL-PRF-29504/21-	Test Terminus, Fiber Optic, Keyed, Removable, Use in Optical Loss and Optical Continuity Testing, Rear Insert/Rear Release Through a Test Terminus Adapter, 1.25 mm Ceramic Ferrule, 1.25 mm Ferrule, (for MIL-PRF-64266 Connectors).
MIL-PRF-64266-	Connectors, Fiber Optic, Circular and Rectangular, Plug and Receptacle Style, Multiple Removable Genderless Termini, Environment Resisting General Specification for
MIL-DTL-38999-	Connectors, Electrical, Circular, Miniature, High Density, Quick Disconnect, (Bayonet Threaded and Breech Coupling), General Specification for.

DEPARTMENT OF DEFENSE STANDARDS

MIL-STD-1678-5-	Fiber Optic Systems Requirements and Measurements (Part 5: Design Phase and Legacy Measurements (Part 5 of 5).
MIL-STD-2042-	Fiber Optic Cable Topology Installation Standard Methods for Naval Ships.

(Copies of these documents are available online at http://quicksearch.dla.mil or from the Standardization Document Order Desk, 700 Robbins Avenue, Building 4D, Philadelphia, PA 19111-5094.)

2.2.2 Other Government documents, drawings, and publications. The following other Government documents, drawings, and publications form a part of this standard practice to the extent specified herein. Unless otherwise specified, the issues are these documents are those cited in the solicitation or contract.

NAVAIR 01-1A-505-4/ T.O. 1-1A-14-4/TM1-1500-232-24-4 - Installation and Testing Practices, Aircraft Fiber Optic Cabling.

(A copy of this document is available online at: https://mynatec.navair.navy.mil. NATEC has three different processes to obtain the manual, depending on if you are Government personnel (military and civilians), Contractors with a Government contract, or everyone else. If unable to access this Web Site or require further assistance, contact (1) NATEC Customer Service: 619.545.1888, (2) NATEC Website Status Hotline: 619.545.1706, or (3) NATEC Customer Service E-mail: nani_customerservice@navy.mil.)

REQUIREMENT 6207

Source: https://assist.dla.mil -- Downloaded: 2016-12-31T21:10Z
Check the source to verify that this is the current version before use.

2.3 Non-Government publications. The following documents form a part of this document to the extent specified herein. Unless otherwise specified, the issues of these documents are cited in the solicitation or contract.

INTERNATIONAL ELECTROTECHNICAL COMMISSION (IEC)

IEC-60793-2	-	Optical fibres – Part 2: Product specifications – General.

(Copies are available online from http://webstore.iec.ch/ or from International Electrotechnical Commission (IEC), 446 Main Street 16th Floor, Worcester, MA 01608.)

TELECOMMUNICATIONS INDUSTRY ASSOCIATION

TIA/EIA-492AAAA	-	Detail Specification for 62.5-µm Core Diameter/125-µm Cladding Diameter Class Ia Graded-Index Multimode Optical Fibers
TIA/EIA-492AAAB	-	Detail Specification for 50-µm Core Diameter/125-µm Cladding Diameter Class Ia Graded-Index Multimode Optical Fibers
TIA-604-2	-	FOCIS-2 Fiber Optic Connector Intermateability Standard, Type ST.
TIA-604-4	-	FOCIS-4 Fiber Optic Connector Intermateability Standard, Type FC and FC-APC.

(Copies are available online at www.tiaonline.org or from Telecommunications Industry Association (TIA), 2500 Wilson Boulevard, Suite 300, Arlington VA 22201.)

2.4 Order of precedence. Unless otherwise noted herein or in the contract, in the event of a conflict between the text of this document and the references cited herein, the text of this document takes precedence. Nothing in this document, however, supersedes applicable laws and regulations unless a specific exemption has been obtained.

3. Definitions.

3.1 Measurement Quality Jumper (MQJ). The Measurement Quality Jumper (MQJ) is a low loss jumper that is used with test equipment to perform optical loss measurements. The MQJ must meet stringent optical loss requirements to ensure accuracy of measurements performed. Measurements must be accurate and repeatable. The accuracy and repeatability of your measurement is only as good as your MQJ. As the MQJ degrades with use, so does the measurement accuracy. The MQJ consists of a single fiber cable with a connector at one end which mates to the test equipment (optical source and power meter) and a connector at the other end which mates to the link/segment under test.

3.2 Test probe. A single fiber MQJ that is configured with a connector at one end to mate with the test equipment and a connector referred to as “test probe” at the other end. The test probe is test connector that is used to test one terminus at a time within a MIL-DTL-38999 connector. This test probe is inserted into the cavity of a test probe adapter. The test probe adapter is mated to the MIL-DTL-38999 connector.

3.3 Test probe adapter. An adapter that mates with the MIL-DTL-38999 multiple termini connector plug or the MIL-DTL-38999 connector receptacle under test and that contains the insert cavity configuration to mate with and lock a test probe in place.

3.4 Test terminus. A single fiber MQJ that is configured with a connector at one end to mate with the test equipment and a connector referred to as “test terminus” at the other end. The test terminus is test connector that is used to test one terminus at a time within a MIL-PRF-64266 connector. This test terminus is inserted into the cavity of a test terminus adapter. The test terminus adapter is mated to the MIL-PRF-64266 connector.

3.5 Test terminus adapter. An adapter that mates with the MIL-PRF-64266 multiple termini connector plug or the MIL-PRF-64266 connector receptacle under test and that contains the insert cavity configuration to mate with and lock a test terminus in place.

REQUIREMENT 6207

Source: https://assist.dla.mil -- Downloaded: 2016-12-31T21:10Z
Check the source to verify that this is the current version before use.

4. Requirements. Fiber optic Measurement Quality Jumpers used to perform the optical loss measurement and the OTDR measurement shall be standardized for commonality compliance across platforms. Commonality compliance is that which bounds or restricts the support equipment to those recognized by the Joint Fiber Optic Working Group (JFOWG), cited in the General Series Technical Manual for Fiber Optic Cabling (NAVAIR 01-1A-505-1/T.O. 1-1A-14/TM 1-1500-232-24-4) and, as a result, cited in this Standard Practice.

4.1 MQJ configurations. MQJ's shall be provided in one or more of the configurations specified in 4.1.1 and 4.1.2.

4.1.1 Single ferrule connector on each end. This MQJ configuration is used to test fiber optic cable segments and links when at least one end of the cable is terminated with single ferrule connectors (such as the ST and FC connectors).

a. ST and FC connectors. When at least one end of the cable segment or cable link under test is terminated with ST connectors or FC connectors, the MQJ can be attached to the segment/link by means of a ST-to-ST adapter or FC-to-FC adapter.

b. Hybrid adapters. For use when different style connectors are on the cable segment/link than on the MQJ. For instance, use a FC-to-ST hybrid adapter when connecting a ST connector MQJ to a cable terminated with an FC connector.

4.1.2 Test probe/test terminus on one end. This MQJ is used to test cable segments and cable links with a multiple termini connector on at least one end. The test probe and test terminus are designed to mate with specific termini types.

a. Test probe. The MIL-DTL-38999 connector contains MIL-PRF-29504/4 and MIL-PRF-29504/5 termini. The test probe used is compatible with these type termini.

b. Test terminus. The MIL-64266 connector contains the MIL-PRF-29504/18 or MIL-PRF-29504/20 fiber optic termini. The test terminus used is compatible with these type termini.

4.2 Component requirements.

4.2.1 Single fiber, single mode cable. Cable with single mode optical fiber in accordance with TIA/EIA-492CAAA, 900 ± 50 micron buffer, shall be used for the 9/125 micron fiber size. Cable with 5/125 micron fiber size shall have optical fiber that conforms to OFS part number C10026 or BC06814. The single fiber cable shall consist of a buffered fiber surrounded with a concentric layer of yarn strength members and polymer jacket. Single fiber cable shall be of sufficiently robust construction to permit frequent handling and have a minimum diameter of 2 mm (.08 inch) nominal. Cable shall have an operating temperature of –28 to 65ºC. Bending, including while at the temperature extremes, shall not impact optical performance. Flash exposure to fluids commonly used around aircraft and ships shall not degrade the cable jacket.

REQUIREMENT 6207

Source: https://assist.dla.mil -- Downloaded: 2016-12-31T21:10Z
Check the source to verify that this is the current version before use.

4.2.2 Single fiber, multimode cable. Cable with multimode optical fiber, 900 ± 50 micron buffer, shall be used. The single fiber cable shall consist of a buffered fiber surrounded with a concentric layer of yarn strength members and polymer jacket. Single fiber cable shall be of sufficiently robust construction to permit frequent handling and have a minimum diameter of 2 mm (.08 inch) nominal. Cable shall have an operating temperature of -28ºC to +65ºC. Multimode optical fiber shall be in accordance with TIA/EIA-492AAAB for the 50/125 micron fiber size, in accordance with TIA/EIA-492AAAA for the 62.5/125 micron fiber size and in accordance with IEC-60793-2 (Annex C) for the 100/140 micron fiber size. OFS optical fiber BF06819 or OFS fiber optic cable C16133 shall be used for the 42.5/125 micron fiber size (required for the MQJ of a 50/125 micron fiber restricted launch cable). Bending, including while at the temperature extremes, shall not impact optical performance. Flash exposure to fluids commonly used around aircraft and ships shall not degrade the cable jacket.

4.2.3 Single ferrule connectors. ST and FC connectors shall have:

a. Ceramic ferrule (no plastic or metal ferrules) with domed end face.

b. Metal housing (also referred to as: bayonet cap or coupling nut) and ferrule/crimp sleeve support (also referred to as: barrel or body). Stainless steel or nickel plated brass are acceptable.

c. Crimp sleeve (ring) capture mechanism for cable yarn strength member rated for a minimum tensile loading of 9.07 kg (20 pounds).

d. Cavity for accepting an externally injected adhesive (two part epoxy) during cable assembly fabrication using a 20 gauge syringe tip.

e. Geometry conforming to TIA-604-2 fiber optic connector intermateability standard for the ST connector and conforming to TIA-604-4 for the FC connector.

4.2.4 Test probe. Test probe shall have:

a. Ceramic ferrule (no plastic or metal ferrules) with domed end face.

b. Metal housing. Stainless steel or nickel plated brass are acceptable.

c. Crimp sleeve (ring) capture mechanism for cable yarn strength member rated for a minimum tensile loading of 9.07 kg (20 pounds).

d. Cavity for accepting an externally injected adhesive during cable assembly fabrication using a 20 gauge syringe tip.

e. Ferrule diameter and concentricity conforming to MIL-PRF-29504/4.

f. Geometry and design that is intermateable with specified connector receptacles and plugs when inserted into applicable connector probe adapter.

(1) The MIL-DTL-38999 Series III connector receptacles and plugs when MIL-PRF-29504/4 and MIL-PRF-29504/5 termini are used.

g. Design characteristics to perform the following functions:

(1) The test probe and mating test probe adapter shall be designed to maintain a minimum .508 mm (.020 inch) compression upon insertion of the test probe. The intent of this compression is such that a positive pressure is retained between the test probe and mating terminus end faces.

4.2.5 Test terminus. Test terminus shall conform to MIL-PRF-29504/21.

REQUIREMENT 6207

Source: https://assist.dla.mil -- Downloaded: 2016-12-31T21:10Z
Check the source to verify that this is the current version before use.

4.3 Optical performance.

4.3.1 Optical loss. When tested to WP 009 03 of the General Series Maintenance Manual for Fiber Optic Cabling, technical manual identified as NAVAIR 01-1A-505-4/T.O. 1-1A-14-4/TM 1-1500-323-24-4, or Method 6F1 of MIL-STD-2042, the connection loss at the reference jumper-to-test jumper interface shall not exceed the values listed in table 6207 - I. Testing shall be performed using an overfilled launch condition.

TABLE 6207 - I. Connection loss acceptance criteria.

Connection interface type and fiber size (microns)	Maximum acceptable connection loss (dB)	Maximum acceptable standard deviation (dB)
ST or FC with 5.8/125	0.35	0.10
ST or FC with 7.5/125	0.35	0.10
ST or FC with 9/125	0.35	0.10
ST or FC with 50/125	0.50	0.05
ST or FC with 62.5/125	0.35	0.05
ST or FC with 100/140	0.50	0.05
Test probe with 5.8/125	0.50	0.10
Test probe with 7.5/125	0.50	0.10
Test probe with 9/125	0.50	0.10
Test probe with 50/125	0.50	0.05
Test probe with 62.5/125	0.35	0.05
Test probe with 100/140	0.35	0.05
Test terminus with 9/125	0.50	0.10
Test terminus with 50/125	0.50	0.05
Test terminus with 62.5/125	0.50	0.05
Test terminus with 100/140	0.50	0.05

4.3.2 Return loss (for single mode only). When tested to Method 6K1 of MIL-STD-2042, the return loss at the reference jumper-to-test jumper interface shall not exceed the values listed in table 6207 – II.

TABLE 6207 - II. Return loss acceptance criteria.

Connection interface type	Minimum acceptable return loss with standard polish (dB)	Minimum acceptable return loss with enhanced polish (dB)
ST or FC	33	43
Test probe	33	43
Test terminus	33	43

4.4 Markings.

4.4.1 Identification label. The MQJ shall be visibly marked with the following: “MQJ”, the vendor name, CAGE Code or trade mark, and the vendor part number.

4.5 Color code by fiber size.

a. MQJ with 5.8/125 micron, single mode fiber shall be constructed with cable containing a yellow outer jacket.

b. MQJ with 7.5/125 micron, single mode fiber shall be constructed with cable containing a yellow outer jacket.

c. MQJ with 9/125 micron, single mode fiber shall be constructed with cable containing a yellow outer jacket.

d. MQJ with 50/125 micron, multimode fiber shall be constructed with cable containing a white outer jacket.

e. MQJ with 62.5/125 micron, multimode fiber shall be constructed with cable containing a gray (slate) outer jacket.

f. MQJ with 100/140 micron, multimode fiber shall be constructed with cable containing a green outer jacket.

REQUIREMENT 6207

Source: https://assist.dla.mil -- Downloaded: 2016-12-31T21:10Z
Check the source to verify that this is the current version before use.

4.6 Fabrication requirements.

4.6.1 Fabrication method. Each MJQ is to be fabricated to meet the specified construction and connector end face geometry. The fabrication method is to include the use of a heat cured epoxy to bond the optical fiber inside the ferrule and a polishing procedure to obtain the connector end face geometry specified below. Procedures in WP 010 of the General Series Maintenance Manual for Fiber Optic Cabling, technical manual identified as NAVAIR 01-1A-505-4/T.O. 1-1A-14-4/TM 1-1500-323-24-4 or in Part 5 of MIL-STD-2042 may be used as a guideline.

4.6.2 Connector end face geometry. Acceptance criteria for the MQJ are to include: (1) Verification that the ferrule end face is domed within the specified ranges for the radius of curvature and for the apex offset. (2) Verification that the fiber height either meets the criteria for an APC, PC or NC polish, whichever is specified for that particular MQJ. End face geometry for each connector on a MQJ shall conform to the applicable, specified parameter limits in accordance with Measurement 5201 of MIL-STD-1678-5. Measurements are to be performed in accordance with appendix B of Measurement 5201.

a. MQJ without a test probe/test teminus. Polish on both ends shall be as specified in the applicable table for connectors at both ends.

b. MQJ with a test probe/test terminus at one end. Polish on the test probe/test terminus end shall be as specified in the applicable table. Polish on the non-test probe/non-test terminus shall be a PC polish.

4.6.3 Cable length. Unless otherwise specified for a particular MQJ construction, the MQJ length specified shall be the length measured from the ferrule end face (tip) on each connector end (tip-to-tip length). A different appendix is provided in Requirement 6207 for each specified cable length.

a. Tolerance. Tolerance from the nominal cable length specified shall be 0.5 meters (1.6 foot) on the 2 meter (6.6 foot) length and 2 meters (6.6 foot) on the 50 meter (164 foot) length. If a one meter (3.3 foot) length is specified, the tolerance from the nominal length shall be 0.13 meters (0.4 foot).

4.6.4 Restricted launch fabrication. This fabrication is applicable for a MQJ launch end optical loss (OL) measurement on a 50/125 micron or a 62.5/125 micron fiber size system in which the aircraft platform specifies the measurement is to be done using a restricted launch condition.

a. 50/125 micron fiber size. For a 2 meter (6.6 foot) total length MQJ, the MQJ is to be fabricated with a 2 meter (6.6 foot) length of 42.5/125 micron fiber that is fusion spliced to a short piece of 50/125 micron fiber. There is no restricted launch configuration for a 50 meter (164 foot) length MQJ.

b. 62.5/125 micron fiber size. For a 2 meter (6.6 foot) total length MQJ, the MQJ is to be fabricated with a 2 meter (6.6 foot) length of 50/125 micron fiber that is fusion spliced to a short piece of 62.5/125 micron fiber. There is no restricted launch configuration for a 50 meter (164 foot) length MQJ.

c. The MQJ shall be fabricated with the fusion splice within one of the connectors. Label shall be placed on the end without the fusion splice with the words “SOURCE END”.

d. If a test probe/test terminus MQJ is being constructed, the test probe/test terminus shall be affixed to the end with the larger fiber size (fusion spliced end).

e. Identification label shall include the words “RESTRICTED LAUNCH MQJ” instead of “MQJ”.

5. Implementation. Unless otherwise specified by the applicable Platform Office, Measurement Quality Jumpers used to perform the optical loss measurement and the OTDR measurement shall be restricted to those in appendices A and B.

REQUIREMENT 6207

Source: https://assist.dla.mil -- Downloaded: 2016-12-31T21:10Z
Check the source to verify that this is the current version before use.

5.1 Verification of requirements.

5.1.1 Responsibility. Unless otherwise specified by the acquiring activity, the supplier is responsible for the performance of all items contained herein with regard to the above requirements.

5.1.2 Optical performance and visual inspection verification. Test data may be provided to demonstrate performance; however, the acquiring activity reserves the right to perform any of the inspections specified. When specified, test samples shall be submitted to the design activity for approval.

6. Notes.

6.1 Intended use. The fiber optic MQJs are intended to be used as the test jumpers to measure the optical loss on (1) cable harnesses, (2) other fiber optic test jumpers, and (3) other miscellaneous cabling.

REQUIREMENT 6207

Source: https://assist.dla.mil -- Downloaded: 2016-12-31T21:10Z
Check the source to verify that this is the current version before use.

MQJ CONFIGURATIONS WITH A 2 METER LENGTH

A.1 Intent.

A.1.1 Test equipment. MQJ configurations with a 2 meter (6.6 foot) length are intended to be used as the test jumpers for performing optical loss measurements with an optical source and power meter and for performing OTDR measurements (such as length determinations) with an OTDR containing an OTDR high resolution module. An OTDR high resolution module is one with a nominal 10 centimeter (3.94 inch) or less dead zone.

A.1.2 Length. The Joint Fiber Optic Working Group (JFOWG) determined that a 2 meter (6.6 foot) jumper length was sufficient to reach from the test equipment to the cabling being accessed in almost all of the most remote locations in the aircraft. Two meters (6.6 foot) was determined to be the length in which the JFOWG standardized the MQJ for the types of measurements listed in A.1.1. Note that 1 meter (3.3 foot) is a sufficient length; however, a 2 meter (6.6 foot) length is preferred to cover most space (location) constraints. For instances where two operators are obtaining the measurement (one reaching into a more inacceptable location going from terminus to terminus within the multiple termini connector, the other monitoring each measurement obtained outside the inaccessible location or outside the aircraft), is one example cited that necessitates the need for a 2 meter (6.6 foot) length.

A.2 Applicable documents.

A.2.1 General. The documents listed in this section are specified in sections 3, 4, and 5 of this standard practice. This section does not include documents cited in other sections of this standard practice or recommended for additional information or as examples. While every effort has been made to ensure the completeness of this list, document users are cautioned that they must meet all specified requirements of documents cited in sections 3, 4, and 5 of this standard practice, whether or not they are listed.

A.2.2 Government documents.

A.2.2.1 Specifications, standards, and handbooks. The following specifications, standards, and handbooks form a part of this document to the extent specified herein. Unless otherwise specified, the issues of these documents are those cited in the solicitation or contract.

DEPARTMENT OF DEFENSE SPECIFICATIONS

MIL-PRF-64266-	Connectors, Fiber Optic, Circular and Rectangular, Plug and Receptacle Style, Multiple Removable Genderless Termini, Environment Resisting General Specification for
MIL-DTL-38999-	Connectors, Electrical, Circular, Miniature, High Density, Quick Disconnect, (Bayonet Threaded and Breech Coupling), General Specification for.

(Copies of these documents are available online at http://quicksearch.dla.mil or from the Standardization Document Order Desk, 700 Robbins Avenue, Building 4D, Philadelphia, PA 19111-5094.)

A.2.3 Order of precedence. Unless otherwise noted herein or in the contract, in the event of a conflict between the text of this document and the references cited herein, the text of this document takes precedence. Nothing in this document, however, supersedes applicable laws and regulations unless a specific exemption has been obtained.

A.3 Requirements.

A.3.1 Configuration. The selected MQJ configuration for the specific fiber size and connectors on each end of the cable will be in conformance with the ferrule end face polish, cable length, and launch conditions as specified in table 6207A - I.

A.3.2 Construction. The MQJ construction will conform to 4.2 through 4.6, as applicable for the specific MQJ configuration.

A.4 Implementation. MQJs shall conform to 5.0 of Requirement 6207 using table 6207A - I or part of the verification (see 5.1).

REQUIREMENT 6207

Source: https://assist.dla.mil -- Downloaded: 2016-12-31T21:10Z
Check the source to verify that this is the current version before use.

TABLE 6207A - I. MQJ configurations.

Item number 1/	Fiber size (microns)	Cable length (meters)	Launch condition 2/, 3/	Instrument end of cable		Test end of cable		CAGE code	Part number
				Connector type	Polish type, method 4/	Connector type	Polish type, method		
ST-to-ST MQJ configurations									
6207AAA	5.8/125	2.0	Overfilled	ST	PC, E	ST	PC, E	06324	FO01080-5E
6207AAB	7.5/125	2.0	Overfilled	ST	PC, E	ST	PC, E	06324	FO01080-7E
6207AAC	9/125	2.0	Overfilled	ST	PC, E	ST	PC, E	06324	FO01080-9E
								08RC6	KFO 30004
6207AAG	50/125	2.0	Overfilled	ST	PC, S	ST	PC, S	06324	FO0238-50
								08RC6	KFO 30001
6207AAH	62.5/125	2.0	Overfilled	ST	PC, S	ST	PC, S	06324	FO0238-62
								08RC6	KFO 30002
6207AAI	100/140	2.0	Overfilled	ST	PC, S	ST	PC, S	06324	FO0238-100
								08RC6	KFO 30003
6207AAJ	50/125	2.0	Overfilled	ST	NC,S	ST	NC,S	06324	FO0238-50NC
								08RC6	KFO 30005
6207AAK	62.5/125	2.0	Overfilled	ST	NC,S	ST	NC,S	06324	FO0238-62NC
								08RC6	KFO 30006
6207AAL	100/140	2.0	Overfilled	ST	NC,S	ST	NC,S	06324	FO0238-100NC
								08RC6	KFO 30007
6207AAM	50/125	2.0	Overfilled	ST	PC, S	ST	PC, S	06324	FO01081-50RL
6207AAN	62.5/125	2.0	Restricted	ST	PC, S	ST	PC, S	06324	FO01081-62RL
6207AAO	50/125	2.0	Restricted	ST	NC,S	ST	NC,S	06324	FO01081-50RLNC
6207AAP	62.5/125	2.0	Restricted	ST	NC,S	ST	NC,S	06324	FO01081-62RLNC
FC-to-FC MQJ configurations									
6207ACA	5.8/125	2.0	Overfilled	FC	PC, E	FC	PC, E	06324	FO01083-5E
								08RC6	KFO 300013
6207ACB	7.5/125	2.0	Overfilled	FC	PC, E	FC	PC, E	06324	FO01083-7E
6207ACC	9/125	2.0	Overfilled	FC	PC, E	FC	PC, E	06324	FO01083-9E
								08RC6	KFO 30014
6207ACD	5.8/125	2.0	Overfilled	FC	APC, E	FC	APC, E	06324	
6207ACE	7.5/125	2.0	Overfilled	FC	APC, E	FC	APC, E	06324	
6207ACF	9/125	2.0	Overfilled	FC	APC, E	FC	APC, E	06324	
								08RC6	KFO 30008
6207ACG	50/125	2.0	Overfilled	FC	PC, S	FC	PC, S	06324	FO00239-50
								08RC6	KFO 30010
6207ACH	62.5/125	2.0	Overfilled	FC	PC, S	FC	PC, S	06324	FO00239-62
								08RC6	KFO 30011
6207ACI	100/140	2.0	Overfilled	FC	PC, S	FC	PC, S	06324	FO00239-100
								08RC6	KFO 30012
6207ACJ	50/125	2.0	Overfilled	FC	NC,S	FC	NC,S	06234	FO00239-50NC
								08RC6	KFO 30015
6207ACK	62.5/125	2.0	Overfilled	FC	NC,S	FC	NC,S	06324	FO00239-62NC
								08RC6	KFO 30016
6207ACL	100/140	2.0	Overfilled	FC	NC,S	FC	NC,S	06324	FO00239-100NC
								08RC6	KFO 30017

See notes at end of table.

Source: https://assist.dla.mil -- Downloaded: 2016-12-31T21:10Z
Check the source to verify that this is the current version before use.

TABLE 6207A - I. MQJ configurations. Continued

Item number 1/	Fiber size (microns)	Cable length (meters)	Launch condition 2/, 3/	Instrument end of cable		Test end of cable		CAGE code	Part number
				Connector type	Polish type, method 4/	Connector type	Polish type, method		
FC-to-FC MQJ configurations Continued									
6207ACM	50/125	2.0	Restricted	FC	PC, S	FC	PC, S	06324	FO01084-50RL
6207ACN	62.5/125	2.0	Restricted	FC	PC, S	FC	PC, S	06324	FO01084-62RL
6207ACO	50/125	2.0	Restricted	FC	NC,S	FC	NC,S	06324	FO01084-50RLNC
6207ACP	62.5/125	2.0	Restricted	FC	NC,S	FC	NC,S	06324	FO01084-62RLNC
Test Probe-to-ST MQJ configurations for M38999 connector									
6207AEA	5.8/125	2.0	Overfilled	ST	PC,E	Test probe	PC,E	06324	FO0240-5E-2
6207AEB	7.5/125	2.0	Overfilled	ST	PC,E	Test probe	PC,E	06324	FO0240-7E-2
6207AEC	9/125	2.0	Overfilled	ST	PC,E	Test probe	PC,E	06324	FO0240-9E-2
6207AEG	50/125	2.0	Overfilled	ST	PC,S	Test probe	PC,S	06324	FO0240-50PC-2
6207AEH	62.5/125	2.0	Overfilled	ST	PC,S	Test probe	PC,S	06324	FO0240-62PC-2
6207AEI	100/140	2.0	Overfilled	ST	PC,S	Test probe	PC,S	06324	FO0240-100PC-2
6207AEJ	50/125	2.0	Overfilled	ST	NC,S	Test probe	NC,S	06324	FO0240-50NC-2
6207AEK	62.5/125	2.0	Overfilled	ST	NC,S	Test probe	NC,S	06324	FO0240-62NC-2
6207AEL	100/140	2.0	Overfilled	ST	NC,S	Test probe	NC,S	06324	FO0240-100NC-2
6207AEM	50/125	2.0	Restricted	ST	PC,S	Test probe	PC,S	06324	FO01087-50RL
6207AEN	62.5/125	2.0	Restricted	ST	PC,S	Test probe	PC,S	06324	
6207AEO	50/125	2.0	Restricted	ST	NC,S	Test probe	NC,S	06324	
6207AEP	62.5/125	2.0	Restricted	ST	NC,S	Test probe	NC,S	06324	
Test terminus – to – ST MQJ configurations for M64266 connector									
6207AGC	9/125	2.0	Overfilled	ST	PC,E	Test terminus	PC,E	53669	1021918-A-A1-1PEH
6207AGF	9/125	2.0	Overfilled	ST	PC,E	Test terminus	APC,E	53669	1021918-A-A1-1APH
6207AGG	50/125	2.0	Overfilled	ST	PC,S	Test terminus	PC,S	53669	1021918-B-A-1UPH
6207AGH	62.5/125	2.0	Overfilled	ST	PC,S	Test terminus	PC,S	53669	1021918-C-A-1UPH
Test probe – to – FC MQJ configurations for M38999 connector									
6207AJA	5.8/125	2.0	Overfilled	FC	PC,S	Test probe	PC,E	06324	FO00242-5E-2
6207AJB	7.5/125	2.0	Overfilled	FC	PC,E	Test probe	PC,E	06324	FO00242-7E-2
6207AJC	9/125	2.0	Overfilled	FC	PC,E	Test probe	PC,E	06324	FO00242-9E-2

See notes at end of table.

Source: https://assist.dla.mil -- Downloaded: 2016-12-31T21:10Z
Check the source to verify that this is the current version before use.

TABLE 6207A - I. MQJ configurations. Continued

Item number 1/	Fiber size (microns)	Cable length (meters)	Launch condition 2/, 3/	Instrument end of cable		Test end of cable		CAGE code	Part number
				Connector type	Polish type, method 4/	Connector type	Polish type, method		
Test probe – to – FC MQJ configurations for M38999 connector, Continued									
6207AJG	50/125	2.0	Overfilled	FC	PC,S	Test probe	PC,S	06324	FO00242-50PC-2
6207AJH	62.5/125	2.0	Overfilled	FC	PC,S	Test probe	PC,S	06324	FO00242-62PC-2
6207AJI	100/140	2.0	Overfilled	FC	PC,S	Test probe	PC,S	06324	FO00242-100PC-2
6207AJJ	50/125	2.0	Overfilled	FC	NC,S	Test probe	NC,S	06324	FO00242-50NC-2
6207AJK	62.5/125	2.0	Overfilled	FC	NC,S	Test probe	NC,S	06324	FO00242-62NC-2
6207AJL	100/140	2.0	Overfilled	FC	PC,S	Test probe	PC,S	06324	FO00242-100NC-2
6207AJM	50/125	2.0	Restricted	FC	PC,S	Test probe	PC,S	06324	
6207AJN	62.5/125	2.0	Restricted	FC	PC,S	Test probe	PC,S	06324	
6207AJO	50/125	2.0	Restricted	FC	NC,S	Test probe	NC,S	06324	
6207AJP	62.5/125	2.0	Restricted	FC	NC,S	Test probe	NC,S	06324	
Test terminus-to-FC MQJ configurations for M64266 connector									
6207ALC	9/125	2.0	Overfilled	FC	PC,E	Test terminus	PC,E	53669	1021918-A-B1-1PEH
6207ALF	9/125	2.0	Overfilled	FC	APC,E	Test terminus	APC,E	53669	1021918-A-C-1APH
6207ALG	50/125	2.0	Overfilled	FC	PC,S	Test terminus	PC,S	53669	1021918-B-B-1UPC
6207ALH	62.5/125	2.0	Overfilled	FC	PC,S	Test terminus	PC,S	53669	1021918-C-B-1UPH

1/ Applications to select only a MQJ with PC polish: Optical loss unless otherwise specified, Return Loss, ODTR using a high resolution module.
2/ Applications to select an overfilled launch MQJ: Detector end MQJ for optical loss test, when specified Launch end MQJ for optical loss test, launch end MQJ for return loss test, OTDR measurement using a high resolution module.
3/ Applications to select a restricted launch MQJ: When specified launch end MQJ for optical loss test.
4/ Polish type shall conform to APC, E = domed end face with an enhanced APC polish; PC,S=domed ferrule with a standard PC polish; or NC,S=flat ferrule with a standard NC polish. Ferrule end face shall meet end face geometry for the specified polish type (see 4.6.2, Connector end face geometry). Acceptance criteria for the MQJ are to include: (1) Verification that the ferrule end face is fabricated to conform with specified end face geometry. Method used to polish during fabrication shall conform to 4.6.1.

REQUIREMENT 6207

Source: https://assist.dla.mil -- Downloaded: 2016-12-31T21:10Z
Check the source to verify that this is the current version before use.

MQJ CONFIGURATIONS WITH A 50 METER LENGTH

B.1 Intent.

B.1.1 Test equipment. MQJ configurations with a 50 meter (164 foot) length are intended to be used as the test jumpers for performing OTDR measurements (such as length determinations) with an OTDR containing an OTDR standard resolution module. An OTDR standard resolution module is one with a 3 to 15 meter (9.84 foot to 49.21 foot) dead zone. For aircraft applications where the maximum cable run being measured is less than 152 meters (500 feet) in length, the standard OTDR module selected is one with a short to medium range and higher resolution. The MQJ length specified is intended for use with this type of standard resolution module.

B.1.2 Length. The MQJ with a 50 meter (164 foot) length serves two functions. One function is to be a low loss, optical test jumper that interfaces the OTDR optical test port with the cable link(s) under test, undergoing troubleshooting, or that are being characterized. This first function does not depend on the cable length. The second function is to be of sufficient length so that the connection at the OTDR optical test port can be distinguished from that of the first connection at the cable under test. For use with the OTDR standard resolution module described in B.1.1, a length of 50 meters (164 foot) is specified. For this function, the MQJ may be referred to as a dead zone cable.

B.2 Applicable documents.

B.2.1 General. The documents listed in this section are specified in sections 3, 4, and 5 of this standard practice. This section does not include documents cited in other sections of this standard practice or recommended for additional information or as examples. While every effort has been made to ensure the completeness of this list, document users are cautioned that they must meet all specified requirements of documents cited in sections 3, 4, and 5 of this standard practice, whether or not they are listed.

B.2.2 Government documents.

B.2.2.1 Specifications, standards, and handbooks. The following specifications, standards, and handbooks form a part of this document to the extent specified herein. Unless otherwise specified, the issues of these documents are those cited in the solicitation or contract.

DEPARTMENT OF DEFENSE SPECIFICATIONS

MIL-PRF-64266-	Connectors, Fiber Optic, Circular and Rectangular, Plug and Receptacle Style, Multiple Removable Genderless Termini, Environment Resisting General Specification for
MIL-DTL-38999-	Connectors, Electrical, Circular, Miniature, High Density, Quick Disconnect, (Bayonet Threaded and Breech Coupling), General Specification for.

(Copies of these documents are available online at http://quicksearch.dla.mil or from the Standardization Document Order Desk, 700 Robbins Avenue, Building 4D, Philadelphia, PA 19111-5094.)

B.2.3 Order of precedence. Unless otherwise noted herein or in the contract, in the event of a conflict between the text of this document and the references cited herein, the text of this document takes precedence. Nothing in this document, however, supersedes applicable laws and regulations unless a specific exemption has been obtained.

B.3 Requirements.

B.3.1 Configuration. The selected MQJ configuration for the specific fiber size and connectors on each end of the cable will be in conformance with the ferrule end face polish, cable length, and launch conditions as specified in table 6207B - I.

B.3.2 Construction. The MQJ construction will conform to 4.2 through 4.6, as applicable for the specific MQJ configuration.

B.4 Implementation. MQJs shall conform to 5.0 of Requirement 6207 using table 6207B - I as part of the verification (see 5.1).

REQUIREMENT 6207

Source: https://assist.dla.mil -- Downloaded: 2016-12-31T21:10Z
Check the source to verify that this is the current version before use.

TABLE 6207B - I. MQJ configurations.

Item number1/	Fiber size (microns)	Cable length meters	Launch condition 2/, 3/	Instrument end of cable		Test end of cable		CAGE code	Part number
				Connector type	Polish type, method 4/	Connector type	Polish type, method 4/		
ST-to-ST MQJ configurations									
6207BAC	9/125	50	Overfilled	ST	PC,E	ST	PC,E	06324	
								08RC6	KFO30020
6207BAG	50/125	50	Overfilled	ST	PC,S	ST	PC,S	06324	
								08RC6	KFO30021
6207BAH	62.5/125	50	Overfilled	ST	PC,S	ST	PC,S	06324	
								08RC6	KFO30022
6207BAI	100/140	50	Overfilled	ST	PC,S	ST	PC,S	06324	
								08RC6	KFO30023
6207BAL	100/140	50	Overfilled	ST	NC,S	ST	NC,S	06324	
								08RC6	KFO30024
FC-to-FC MQJ configurations									
6207BCC	9/125	50	Overfilled	FC	PC,E	FC	PC,E	06324	
								08RC6	KFO30025
6207BCF	9/125	50	Overfilled	FC	PC,E	FC	APC,E	06324	
								08RC6	KFO30009
6207BCG	50/125	50	Overfilled	FC	PC,S	FC	PC,S	06324	
								08RC6	KFO30026
6207BCH	62.5/125	50	Overfilled	FC	PC,S	FC	PC,S	06324	
								08RC6	KFO30027
6207BCI	100/140	50	Overfilled	FC	PC,S	FC	PC,S	06324	
								08RC6	KFO30028
6207BCL	100/140	50	Overfilled	FC	NC,S	FC	NC,S	06324	
								08RC6	KFO30029
Test Probe-to-ST MQJ configurations for M38999 connector									
6207BEC	9/125	50	Overfilled	ST	PC,E	Test probe	PC,E	06324	FO 00240-9E-50
6207BEG	50/125	50	Overfilled	ST	PC,S	Test probe	PC,S	06324	FO 00240-50PC-50
6207BEH	62.5/125	50	Overfilled	ST	PC,S	Test probe	PC,S	06324	FO 00240-62PC-50
6207BEI	100/140	50	Overfilled	ST	PC,S	Test probe	PC,S	06324	FO 00240-100PC-50
6207BEL	100/140	50	Overfilled	ST	NC,S	Test probe	NC,S	06324	FO 00240-100NC-50
Test terminus-to-ST MQJ configurations for M64266 connector									
6207BGC	9/125	50	Overfilled	ST	PC,E	Test terminus	PC,E	53669	1021918-A-A1-2PEH
6207BGF	9/125	50	Overfilled	ST	PC,E	Test terminus	APC,E	53669	1021918-A-A1-2APH
6207BGG	50/125	50	Overfilled	ST	PC,S	Test terminus	PC,S	53669	1021918-B-A-2UPC
6207BGH	62.5/125	50	Overfilled	ST	PC,S	Test terminus	PC,S	53669	1021918-C-A-2UPH
Test Probe-to-FC MQJ configurations for M38999 connector									
6207BJC	9/125	50	Overfilled	FC	PC,E	Test probe	PC,E	06324	FO 00242-9E-2
6207BJG	50/125	50	Overfilled	FC	PC,S	Test probe	PC,S	06324	FO 00242-50PC-2
6207BJH	62.5/125	50	Overfilled	FC	PC,S	Test probe	PC,S	06324	FO 00242-62PC-2
6207BJI	100/140	50	Overfilled	FC	PC,S	Test probe	PC,S	06324	FO 00242-100PC-2
6207BJL	100/140	50	Overfilled	FC	NC,S	Test probe	NC,S	06324	FO 00242-100NC-2
Test terminus-to-FC MQJ configurations for M64266 connector									
6207BLC	9/125	50	Overfilled	FC	PC,E	Test terminus	PC,E	53669	1021918-A-B1-2PEH
6207BLF	9/125	50	Overfilled	FC	PC,E	Test terminus	APC,E	53669	1021918-A-C-2APH
6207BLG	50/125	50	Overfilled	FC	PC,S	Test terminus	PC,E	53669	1021918-B-B-2UPH
6207BLH	62.5/125	50	Overfilled	FC	PC,S	Test terminus	PC,E	53669	1021918-C-B-2UPH

See notes on next page.

Source: https://assist.dla.mil -- Downloaded: 2016-12-31T21:10Z
Check the source to verify that this is the current version before use.

TABLE 6207B - I. MQJ configurations- Continued.

1/ Applications to select only a MQJ with PC polish: OTDR measurement, especially one using a high resolution module.
2/ Applications to select an overfilled launch MQJ: OTDR measurement, especially one using a high resolution module.
3/ Applications to select a restricted launch MQJ: None for an OTDR measurement application.
4/ Polish type shall conform to APC,E = domed end face with an enhanced APC polish; PC, E = domed ferrule with an enhanced PC polish; PC,S = domed ferrule with a standard PC polish, or NC,S = flat ferrule with a standard NC polish. Ferrule end face shall meet end face geometry for the specified polish type (see 4.6.2). Method used shall conform to 4.6.1.

Source: https://assist.dla.mil -- Downloaded: 2016-12-31T21:10Z
Check the source to verify that this is the current version before use.

MECHANICAL SPLICE ASSEMBLY EQUIPMENT

1. Purpose. This requirement refines or bounds (constrains) the selection of the fiber optic support equipment (SE) used to secure the fiber optic mechanical splice within a section of cable or attach a fiber pigtail onto the end of fiber optic cabling. Included is equipment for cutting and strapping, cleaving, cable alignment and crimping, curing and heat shrinking for mechanical splice assembly. This requirement is intended for developmental, prototype, production, rework and modification programs on military platform fiber optic cable assemblies.

1.1 Supplemental, assembly. This requirement defines the tools and accessories that comprise the set (kit) for assembling (securing) a fiber optic mechanical splice within a fiber optic cable or for attaching a fiber pigtail onto the end of fiber optic cabling. When the mechanical splice assembly equipment (including cleaving, curing and crimping) are used properly and the procedure tailored correctly for the specific mechanical splice in accordance with the specified generic assembly procedure, optical loss and return loss (single mode only) values, as specified in the component specifications, will be obtained. Also, this equipment is to be used with cleaning consumable supplies listed in Requirement 6201. The recommended mechanical splice assembly equipment supports the following tasks:

a. Cut and strip fiber optic cable, aramid yarn and optic fiber buffer/coating. This operation requires the use of cable and aramid yarn cutting and buffer stripping tools.

b. Cleave the fiber end face to obtain the required optical loss and return loss. This operation requires the use of the tip shaper (end face polisher) or cleaving the fiber ends to the specified angle/geometry.

c. Crimp aramid yarn (such as Kevlar) of fiber optic cable onto the mechanical splice. This operation requires the use of crimp tools and dies.

d. Cure UV adhesive to secure the optic fibers within the capillary with a specified cure cycle. This operation requires the use of specified curing oven and fiber holding fixtures.

2. Applicable documents.

2.1 General. The documents listed in this section are specified in sections 3, 4, and 5 of this standard practice. This section does not include documents cited in other sections of this standard practice or recommended for additional information or as examples. While every effort has been made to ensure the completeness of this list, document users are cautioned that they must meet all specified requirements of documents cited in sections 3, 4, and 5 of this standard practice, whether or not they are listed.

2.2 Government documents.

2.2.1 Specifications, standards, and handbooks. The following specifications, standards, and handbooks form a part of this document to the extent specified herein. Unless otherwise specified, the issues of these documents are those cited in the solicitation or contract.

COMMERCIAL ITEM DESCRIPTION

A-A-59163 - Insulation Tape, Electrical, High Temperature, Polytetrafluoroethylene Pressure Sensitive.

(Copies of these documents are available online at http://quicksearch.dla.mil or from the Standardization Document Order Desk, 700 Robbins Avenue, Building 4D, Philadelphia, PA 19111-5094.)

Source: https://assist.dla.mil -- Downloaded: 2016-12-31T21:10Z
Check the source to verify that this is the current version before use.

2.3 Other Government documents, drawings, and publications. The following other Government documents, drawings, and publications form a part of this standard practice to the extent specified herein. Unless otherwise specified, the issues are these documents are those cited in the solicitation or contract.

NAVAIR 01-1A-505-4/ T.O. 1-1A-14-4/TM 1-1500-232-24-4-	Installation and Testing Practices, Aircraft Fiber Optic Cabling.

(A copy of this document is available online at: https://mynatec.navair.navy.mil. NATEC has three different processes to obtain the manual, depending on if you are Government personnel (military and civilians), Contractors with a Government contract, or everyone else. If unable to access this Web Site or require further assistance, contact (1) NATEC Customer Service: 619.545.1888, (2) NATEC Website Status Hotline: 619.545.1706, or (3) NATEC Customer Service E-mail: nani_customerservice@navy.mil.)

2.4 Order of precedence. Unless otherwise noted herein or in the contract, in the event of a conflict between the text of this document and the references cited herein, the text of this document takes precedence. Nothing in this document, however, supersedes applicable laws and regulations unless a specific exemption has been obtained.

3. Definitions.

3.1 Assembly, mechanical splice. The act used to secure a fiber optic mechanical splice within a section of a fiber optic cable or to attach a fiber pigtail to the end of fiber optic cabling.

3.2 Pigtail, fiber. A length of fiber optic cable usually 304.8 mm to 457.2 mm (12 inches to 18 inches) terminated on one end with a fiber optic terminus or single ferrule connector.

4. Requirements. Fiber optic mechanical splice assembly equipment shall be standardized for commonality compliance across platforms. Commonality compliance is that which bounds or restricts the support equipment to those recognized by the Joint Fiber Optic Working Group (JFOWG), cited in the General Series Technical Manual for Fiber Optic Cabling (NAVAIR 01-1A-505-1/T.O. 1-1A-14/TM 1-1500-232-24-4) and, as a result, cited in this Standard Practice.

5. Implementation. Unless otherwise specified by the applicable Platform Office, fiber optic mechanical splice assembly equipment used shall be restricted to those in table 6208 – I and table 6208 – II. This fiber optic mechanical splice assembly equipment is used for securing mechanical splices within cable that are a part of a fiber optic cable harness.

REQUIREMENT 6208

Source: https://assist.dla.mil -- Downloaded: 2016-12-31T21:10Z
Check the source to verify that this is the current version before use.

TABLE 6208 – I. Mechanical splice assembly equipment.

Item	Description	Quantity	CAGE code	Part number
CUTTING AND STRIPPING				
6204AA	Strip tool, buffer (micro strip), commercial & M85045/16 fiber, w/ red blades NSN 5110-01-419-4361	1	08RC6	0700-3070
6204AB	Blades, aircraft fiber, strip tool, buffer (micro strip), light blue blades	1	59984	MS1-RB-10S
6204AC	Strip tool, buffer (no nicks), commercial and M85045/16 fiber, red handle	1	71827	NN203
			08RC6	0700-3130
6204AD	Strip tool, buffer (no nicks), aircraft fiber, blue handle 1/	1	71827	NN254
			08RC6	0700-3132
6204AE	Strip tool, OFCC, AWG 18, commercial and M85045/16 cable	1	75347	11045
			64959	104 278 478
			08RC6	0700-3062
6204AF	Strip tool, aircraft tight buffered cable	1	30119	45-162
6204AG	Strip tool, aircraft loose tube cable	1	30119	45-163
6204AH	Shears, Aramid yarn (Kevlar) NSN 5110-01-419-5283	1	71827	86 1 /2S
			OKN34	744
			08RC6	0700-3315
6208AA	Template, cut length, MIL-PRF-24623/7 mechanical splice (Vendor A)	1	TBD	TBD
6208AB	Template, cut length, MIL-PRF-24623/7 mechanical splice (Vendor B)	1	TBD	TBD
6208AC	Template, cut length, MIL-PRF-24623/7 mechanical splice (Vendor C)	1	TBD	TBD
6208AD	Template, cut length, MIL-PRF-24623/7 mechanical splice (Vendor D)	1	TBD	TBD
6208AE	Template, cut length, MIL-PRF-24623/7 mechanical splice (Vendor E)	1	TBD	TBD
6204AQ	Ruler, Machinist NSN 5200-00-725-7347	1	81348	GGG-R-79
			32445	SS-6
6204AR	Ruler, 152.4 mm (6 inch), standard/metric 2/	1	08RC6	0701-5010
6204AT	Pick, for separating aramid yarn (fiber glass/Kevlar)	1	08RC6	0700-3340
CLEAVING (SCORING)				
6208BA	Tip shaper, fiber (FTS), fiber end face cleave/polish, (splicing), ≤3 degree cleave angle	1	3ET44	FTS-002
6208BB	Polish film cassette/cartridge, tip shaper, fiber optic, fiber end face polish	1	3ET44	111801
6208BC	Fiber length cutting fixture, tip shaper, fiber optic, fiber end face polish, 100/140/173 micron polyimide coated fiber type, for Agiltron mechanical splice	1	TBD	TBD
6208BD	Fiber holding clamp, left, 100/140/173 micron polyimide coated fiber type, for tip shaper, fiber (FTS), fiber end face polish	1	TBD	TBD
6208BE	Fiber holding clamp, right, 100/140/173 micron polyimide coated fiber type, for tip shaper, fiber (FTS), fiber end face polish	1	TBD	TBD
6208BF	Floating ferrule module, 100/140/173 micron polyimide coated fiber type, for tip shaper, fiber (FTS), fiber end face polish	1	3ET44	111997
6204CS	Debris bottle, flip-top, for cleaved fiber ends	1	08RC6	0700-9975
CABLE ALIGNMENT AND CRIMPING				
6208CA	Assembly tool, mechanical splice alignment, vendor A	1	TBD	TBD
6208CB	Assembly tool, mechanical splice alignment, vendor B	1	TBD	TBD
6208CC	Assembly tool, mechanical splice alignment, vendor C	1	TBD	TBD
6208CD	Assembly tool, mechanical splice alignment, vendor D	1	TBD	TBD
6208CE	Assembly tool, mechanical splice alignment, vendor E	1	TBD	TBD
6208CF	Crimp tool and die set, mechanical splice (vendor A)	1	TBD	TBD
6208CG	Crimp tool and die set, mechanical splice (vendor B)	1	TBD	TBD
6208CH	Crimp tool and die set, mechanical splice (vendor C)	1	TBD	TBD
6208CI	Crimp tool and die set, mechanical splice (vendor D)	1	TBD	TBD
6208CJ	Crimp tool and die set, mechanical splice (vendor E)	1	TBD	TBD
6208CK	UV blocking shield	1	TBD	TBD
CURING				
6208DA	Curing oven, programmable, UV light source, M24623, vendor A	1	TBD	TBD
6208DB	Curing oven, programmable, UV light source, M24623, vendor B	1	TBD	TBD
6208DC	Curing oven, programmable, UV light source, M24623, vendor C	1	TBD	TBD
6208DD	Curing oven, programmable, UV light source, M24623, vendor D	1	TBD	TBD
6208DE	Curing oven, programmable, UV light source, M24623, vendor E	1	TBD	TBD
6208DF	Safety glasses, UV absorbing	1	TBD	TBD

See footnotes at end of table.

Source: https://assist.dla.mil -- Downloaded: 2016-12-31T21:10Z
Check the source to verify that this is the current version before use.

TABLE 6208 – I. Mechanical splice assembly equipment – Continued.

Item	Description	Quantity	CAGE code	Part Number
HEAT SHRINKING				
6206AE	Heat gun, compressed air/nitrogen, for explosive environments	1	06090	HT-900B
			06090	HT-920B
			0FN27	HT-71002
6206AF	Heat gun, self-contained, battery powered 3/	1	1DLV6	MCH-100-A
6206AG	Heat gun, self-contained, battery powered (improved battery management) 3/	1	1DLV6	MCH-100-A-1
MECHANICAL SPLICE ASSEMBLY, GENERAL				
6204GB	Screwdriver, reversible	1	08RC6	4300-9000
MISCELLANEOUS				
6204HA	Flashlight	1	62576	230
			7J761	1900C
6201AH	Foreign Object Debris (FOD) pouch	6	08RC6	0400-3020
6204HC	Tweezers	1	08RC6	0700-8911
6204HD	Eye loop, 7X min for viewing end face after each polish step NSN 6650-01-232-9536	1	06175	654 2039
			4M564	ELP-174 10X
SAFETY				
6204IA	Safety glasses NSN 6540-01-433-7953	1	75347	60050
			7J61	TK110
			08RC6	0700-8810
6204IB	Tweezers, Teflon coated NSN 6635-01-232-9536	1	32218	GTP-293
			7J761	6005268
			08RC6	0700-3196
6204IC	Mat, black, non-reflective work surface, 304 mm x 457.2 mm (12 inch x 18 inch) min.	1	71827	FS100
			08RC6	0700-9985
MISCELLANEOUS				
	Termini pigtail (pin terminus on 457.2 mm (18 inch) cable) 4/	NA	TBD	TBD
	Termini pigtail (socket terminus on 457.2 mm (18 inch) cable) 4/	NA	TBD	TBD

1/ Alternative to 6204AC.
2/ Alternate to 6204AQ.
3/ Alternative to 6206 AE.
4/ Cable must be of same fiber size and compatible with cable construction of segment being replaced.

Source: https://assist.dla.mil -- Downloaded: 2016-12-31T21:10Z
Check the source to verify that this is the current version before use.

TABLE 6208 – II. Mechanical splice consumable supplies.

Item	Description	Quantity	CAGE code	Part Number
	CUTTING and STRIPPING			
6204JA	Masking tape, 19.05 mm x 36.58 m (3/4 inch x 40 yards) minimum NSN 7500-01-539-0552	1	08RC6	3300-6010
6204AI	Marking pen, permanent	1	08RC6	1500-9200
6204AS	Cleaning (music) wire, 125 µm (.005 inch), w/ container (3 pieces min) NSN 9505-01-376-9398	1	08RC6	0700-3210
	CLEAVING			
	None			
	CABLE ALIGNMENT and CRIMPING			
6108AE	Insulating tape, electrical, A-A-59163 Type II, black, non-adhesive, self-bonding, 25.4cm x 10.97 m (1 inch x 36 foot)	N/A		NSN 5970-00-955-9976
	CURING			
	None 1/			
	HEAT SHRINKING			
	None 2/			
	SAFETY			
	None			
	MECHANICAL SPLICE ASSEMBLY			
	None			
	MISCELLANEOUS			
	Cleaning supplies3/			
6204PC	Gloves, examining, nitrile, powder-free, 6 mil (0.15 mm) thick, 100/box	1	59728	5761R08

1/ See Requirement 6103 for epoxy, UV adhesive and index matching materials.
2/ Use heat shrink tubing that conforms to SAE AMS-DTL-23053/5 style.
3/ Cleaning supplies are listed in Requirement 6201. Recommend cleaning supplies for mechanical splice assembly are: canned air, cleaning cloth, solvent dispenser, alcohol, & swabs.

6. Notes.

6.1 Intended use. On these platforms, the fiber optic splice assembly equipment is intended to be used for securing mechanical splices within a section of cable or attach a fiber pigtail onto the ends of fiber optic cabling that are a part of (1) cable harnesses and (2) other miscellaneous cabling.

Source: https://assist.dla.mil -- Downloaded: 2016-12-31T21:10Z
Check the source to verify that this is the current version before use.

POST INSTALLATION INSPECTION TOOLS

1. Purpose. This requirement refines or bounds (constrains) the selection of the fiber optic support equipment (SE) consisting of the tools that can assist in the post installation inspection of fiber optic cable harnesses. This requirement is intended for developmental, prototype, production, rework and modification programs on military platform fiber optic cable assemblies.

2. Applicable documents.

2.1 General. The documents listed in this section are specified in sections 3, 4, and 5 of this standard practice. This section does not include documents cited in other sections of this standard practice or recommended for additional information or as examples. While every effort has been made to ensure the completeness of this list, document users are cautioned that they must meet all specified requirements of documents cited in sections 3, 4, and 5 of this standard practice, whether or not they are listed.

2.2 Other Government documents, drawings, and publications. The following other Government documents, drawings, and publications form a part of this standard practice to the extent specified herein. Unless otherwise specified, the issues are these documents are those cited in the solicitation or contract.

NAVAIR 01-1A-505-4 T.O. 1-1A-14-4/TM1-1500-232-24-4- Installation and Testing Practices, Aircraft Fiber Optic Cabling

(A copy of this document is available online at: https://mynatec.navair.navy.mil. NATEC has three difference processes to obtain the manual, depending on if you are Government personnel (military and civilians), Contractors with a Government contract, or everyone else. If unable to access this Web Site or require further assistance, contact (1) NATEC Customer Service: 619.545.1888, (2) NATEC Website Status Hotline: 619.545.1706, or (3) NATEC Customer Service E-mail: nani_customerservice@navy.mil.)

2.3 Order of precedence. Unless otherwise noted herein or in the contract, in the event of a conflict between the text of this document and the references cited herein, the text of this document takes precedence. Nothing in this document, however, supersedes applicable laws and regulations unless a specific exemption has been obtained.

3. Definition.

3.1 Post installation inspection. An examination performed after the installation is completed to ensure the fiber optic cable harness is in place and secured using proper methods and processes.

4. Requirements. Fiber optic support equipment (SE) shall include tools needed to perform a post installation inspection. Tools used shall include those recognized by the Joint Fiber Optic Working Group (JFOWG), cited in the General Series Technical Manual for Fiber Optic Cabling (NAVAIR 01-1A-505-1/T.O. 1-1A-14/TM 1-1500-232-24-4) and, as a result, cited in this Standard Practice.

5. Implementation. Unless otherwise specified by the applicable Platform Office, tools used to perform a post installation inspection of the cable optic cable harness shall include those in table 6209 – I.

Source: https://assist.dla.mil -- Downloaded: 2016-12-31T21:10Z
Check the source to verify that this is the current version before use.

TABLE 6209 – I. Connector accessories assembly tools.

Item	Description	Quantity	Cage Code	Part number
Tools & Accessories1/, 2/, 3/				
6209AA	Flashlight, 0.625 inch diameter x 4.75 inch long 2-AAA batteries, estimated battery time 2 hours NSN 6230-01-419-5898	1	62576	230
			7J761	1900C
6209AB	Flashlight, explosion proof, 1.2 Vdc, orange with plastic ABS body NSN 6230-01-448-6268 (alternative to 6208AA)	1	39428	1050T33
			71092	2117
6209AC	Inspection mirror, 2.25” dia, telescoping handle 10 -14” hinged 360 deg adjustment NSN 5120-01-399-9300	1	1CV05	2372
			25795	3R561
	Inspection mirror, 3.5x2.125”, telescoping handle 11-15 “, hinged 360 deg adjustment, NSN 5120-01-399-9301	1	25795	3R562
			1CV05	2373
6209AD	Inspection mirror, 2x1” oval, fixed handle 8.75” long, hinged 360 degree adjustment NSN 5120-01-399-9300 (alternative to 6208AC)	1	1CV05	2371
			25795	3R560
6209AE	Inspection mirror, 0.875” dia, fixed handle 7” long, hinged 360 deg adjustment NSN 5120-01-118-6279 (alternative to 6208AC)	1	52346	119-609

1/ Part numbers listed are for manufacturers' products that have been identified to meet the full requirements for the item. Other manufacturers are welcome to produce equivalent products for outfitting the set. Applicability to be determined through the applicable supply process.
2/ These tools and accessories are considered general equipment. Other tools and accessories suitable to perform the inspection can be used.
3/ Alternatives for each item are listed below the first listing for this piece of support equipment to allow for personal preference for different sizes and types.

6. Notes.

6.1 Intended use. On these platforms, the fiber optic tools used for post installation inspection of (1) cable harnesses and (2) other miscellaneous fiber optic installed cabling.

Source: https://assist.dla.mil -- Downloaded: 2016-12-31T21:10Z
Check the source to verify that this is the current version before use.

INTERFACE REQUIREMENTS FOR PARTS AND SUPPORT EQUIPMENT

(6301-6305)

Source: https://assist.dla.mil -- Downloaded: 2016-12-31T21:10Z
Check the source to verify that this is the current version before use.

TERMINI RETENSION CLIP SEATING TESTER INTERFACE REQUIREMENTS

1. Purpose. The interface requirements for a fiber optic termini retention clip seating tester are specified herein. These requirements minimize variables in testing by standardizing areas of plunger interface with the terminus and applied loading. Minimizing test variables permits more accurate comparison of test results from multiple sources of supply for this tester. The intent is to provide a tester that gives the Fleet/Field maintainer with a means to inspect for and verify that a terminus is seated properly within the connector insert. Different seating configurations exist, dependent upon terminus type. The terminus that does not contain a retention clip is checked to ensure proper seating of the terminus within the retention clip of the connector insert. This configuration is found for termini used with the MIL-DTL-38999 Series III connector. The terminus containing a retention clip is checked to ensure proper seating of the retention clip within the connector insert. This configuration is found for termini used with the MIL-PRF-28876 and MIL-PRF-64266 connectors. This requirement is intended for developmental, prototype, production, rework and modification programs on military platform fiber optic cable assemblies.

1.1 Supplemental, electrical contact. A tester is used to verify that an electrical contact is seated within the retention clip (contact retainer clip) of a MIL-DTL-38999 connector. If a "click" is heard, then it is assumed that the contact (or fiber optic terminus) is "locked into place". This may not be the case. Each cavity in a MIL-DTL-38999 connector insert has a retention clip. Each retention clip has at least two fingers. If a contact (or fiber optic terminus) is not inserted completely, the fingers may not lock onto the contact (terminus) shoulder (i.e., the smaller diameter below the shoulder). The fingers of the retention clip remains sitting on top of the shoulder (i.e. the larger diameter of the contact shoulder). When mated, the action of the two contacts first abutting can push back on the unlocked contact.

1.2 Supplemental, fiber optic termini. A similar tester is needed for verifying proper retention clip seating of a fiber optic terminus. Concerns with not shattering the optical fiber end and the appropriate applied load need to be addressed prior to the tester design. Requirement 6301 provides those requirements in the form of a requirements list.

1.3 Supplemental, item number. Item number assigned to the termini retention clip seating tester is 6203GA (see Requirement 6203).

2. Applicable documents.

2.1 General. The documents listed in this section are specified in sections 3, 4, and 5 of this standard practice. This section does not include documents cited in other sections of this standard practice or recommended for additional information or as examples. While every effort has been made to ensure the completeness of this list, document users are cautioned that they must meet all specified requirements of documents cited in sections 3, 4, and 5 of this standard practice, whether or not they are listed.

2.2 Other Government documents, drawings, and publications. The following other Government documents, drawings, and publications form a part of this standard practice to the extent specified herein. Unless otherwise specified, the issues are these documents are those cited in the solicitation or contract.

NAVAIR 01-1A-505-4/ T.O. 1-1A-14-4/TM1-1500-232-24-4- Installation and Testing Practices, Aircraft Fiber Optic Cabling.

(A copy of this document is available online at: https://mynatec.navair.navy.mil. NATEC has three different processes to obtain the manual, depending on if you are Government personnel (military and civilians), Contractors with a Government contract, or everyone else. If unable to access this Web Site or require further assistance, contact (1) NATEC Customer Service: 619.545.1888, (2) NATEC Website Status Hotline: 619.545.1706, or (3) NATEC Customer Service E-mail: nani_customerservice@navy.mil.) (

REQUIREMENT 6301

Source: https://assist.dla.mil -- Downloaded: 2016-12-31T21:10Z
Check the source to verify that this is the current version before use.

2.3 Order of precedence. Unless otherwise noted herein or in the contract, in the event of a conflict between the text of this document and the references cited herein, the text of this document takes precedence. Nothing in this document, however, supersedes applicable laws and regulations unless a specific exemption has been obtained.

3. Definitions.

3.1 Retention clip seating tester. A tool used as a means to inspect for and verify that a fiber optic terminus is seated properly within the insert of a multiple termini connector.

3.2 Termini. A component used in a fiber optic, multiple termini, connection that is inserted into one of the insert cavity of a multiple termini connector and terminated onto the end of a simplex, fiber optic cable. Termini is the plural form for the word terminus.

3.3 Terminus. Singular form for the word termini.

3.4 Terminus, pin. The male configuration of a terminus that consists of a metal barrel (body) and a metal or ceramic ferrule.

3.5 Terminus, socket. The female configuration of a terminus that consists of a metal barrel (body), a metal or ceramic ferrule and an alignment sleeve. The alignment sleeve attaches to the socket terminus ferrule. Fiber alignment occurs when the pin terminus slides into the alignment sleeve of the socket terminus.

4. Requirements. Fiber optic retention clip seating tester shall be standardized for commonality compliance across platforms. Commonality compliance is that which bounds or restricts the interface requirements to those recognized by the Joint Fiber Optic Working Group (JFOWG), cited in the General Series Technical Manual for Fiber Optic Cabling (NAVAIR 01-1A-505-1/T.O. 1-1A-14/TM 1-1500-232-24-4) and, as a result, cited in this Standard Practice. Requirements for the termini retention clip seating tester interface with the termini shall comply with 4.1 through 4.3. Considerations for determining these fiber optic related requirements are addressed in appendix A.

4.1 Plunger end face requirements.

4.1.1 Dimensional requirements. Plunger for socket termini and plunger with alignment sleeve affixed for pin termini shall meet the dimensions in the table specified for each terminus type in figure 6301 - 1.

REQUIREMENT 6301

Source: https://assist.dla.mil -- Downloaded: 2016-12-31T21:10Z
Check the source to verify that this is the current version before use.

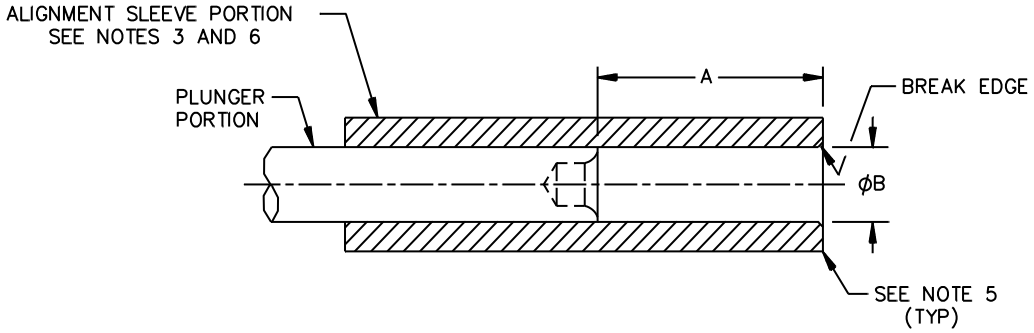

Pin termini configuration

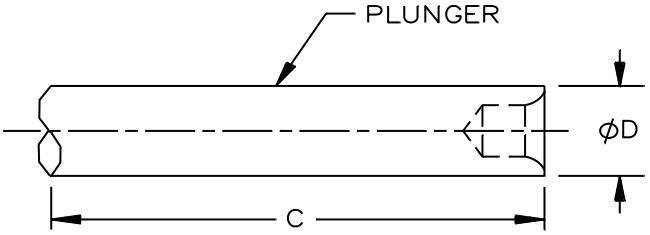

Socket termini configuration

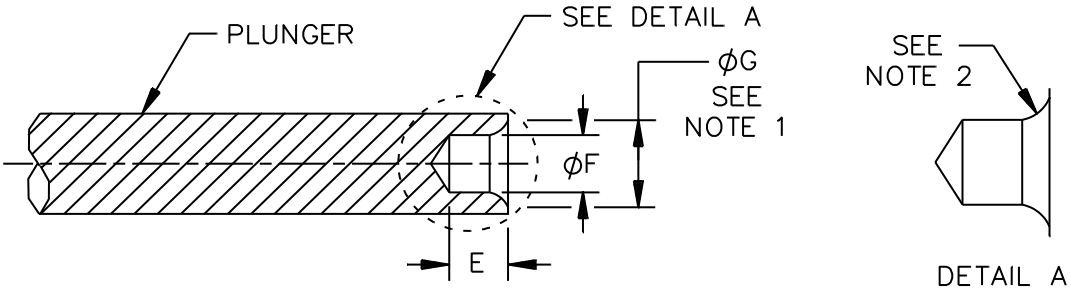

Common plunger dimensions

FIGURE 6301 - 1. Plunger and alignment sleeve dimensions.

Source: https://assist.dla.mil -- Downloaded: 2016-12-31T21:10Z
Check the source to verify that this is the current version before use.

Designation (see figure 1)	Dimension					
	M29504/4	M29504/5	M29504/14	M29504/15	M29504/18	M29504/18 with ASR7/
A	.100/.125		.110/.140		.157/.187	
B	.064/.065		.080/.082		.050/.053	
C		.285 MIN		.270 MIN		.150 MIN
D		.060/.061		.076/.077		.045/.046
E	.031 MIN	.031 MIN	.031 MIN	.031 MIN	.031 MIN	.031 MIN
F	.033/.037	.033/.037	.033/.037	.033/.037	.033/.037	.033/.037

1/ Dimension G = Dimension F + .010.
2/ .010 R Min.
3/ Alignment sleeve portion shall have a .140 maximum outside diameter.
4/ All dimensions are in inches.
5/ Break all sharp edges.
6/ Alignment sleeve and plunger may be one piece or separate pieces. If the latter, the alignment sleeve shall be permanently affixed to the plunger.
7/ /18 w/ ASR = M29504/18 with an alignment sleeve retainer installed.
8/ Color shall be in accordance with 4.1.2.

FIGURE 6301 - 1. Plunger and alignment sleeve dimensions – Continued.

4.1.2 Color code. The various type termini plungers shall be color coded as follows:

a. M29504/4 and M29504/5. Violet.

b. M29504/14 and M29504/15. Yellow.

c. M29504/18. Black.

4.2 Materials.

4.2.1 Plunger. Stainless steel (303 stainless is acceptable).

4.2.2 Alignment sleeve. Stainless steel.

4.3 Applied load requirement.

4.3.1 Applied force.

a. Tester shall allow a specified force (load) of 1.81 ± 0.45 kg (4 ± 1 pound) to be applied.

b. Tester shall contain a visual indication when the specified force (see 4.3.1) has been obtained (reached). Visual indication of when at the specified force shall be detectable and easily noticed.

c. Tester shall contain a means to calibrate the tester visual indicator, and any other indications (such as sound), at the specified force. Calibration is to be performed by a calibration laboratory, not the operator (using the tester).

4.3.2 Alignment. This alignment refers to the longitudinal axis of the tester plunger being in line with the longitudinal axis of the terminus.

a. Axial alignment. Tester shall contain a means to prevent a side (off-axial) force from being applied to the terminus. This means of prevention shall work for multiple shell sizes (11 through 25 at a minimum).

b. Visibility. Tester means of axial alignment shall be in a manner so as to minimize any restriction on visibility to the terminus.

REQUIREMENT 6301

Source: https://assist.dla.mil -- Downloaded: 2016-12-31T21:10Z
Check the source to verify that this is the current version before use.

5. Implementation. Unless otherwise specified by the applicable Platform Office, fiber optic retention clip seating tester shall incorporate the interface dimensions in figure 6301 - 1 and the interface requirements of 4.1 through 4.3. Verification of these requirements shall comply with 5.1 and 5.2.

5.1 Responsibility. Unless otherwise specified by the acquiring activity, the supplier is responsible for the performance of all items contained herein with regard to the above requirements.

5.2 Performance verification. Dimensional data for the plunger end face and calibration data for the applied load may be provided to demonstrate performance; however, the acquiring activity reserves the right to perform any of the inspections specified. When specified, test samples shall be submitted to the designated design activity for approval.

6. Notes.

6.1 Intended use. On these platforms, the fiber optic termini retention clip seating tester intended use includes (1) cable harnesses, (2) equipment (electronic module/package) such as a ATR, LRC, LRM, LRU or WRA with internal fiber optics, (3) circuit card modules and assemblies with internal fiber optics, (4) fiber optic test jumpers, and (5) other miscellaneous cabling.

6.2 Consideration for requirements. Considerations for specifying the parameters and limits are addressed in appendix A.

Source: https://assist.dla.mil -- Downloaded: 2016-12-31T21:10Z
Check the source to verify that this is the current version before use.

CONSIDERATIONS FOR DETERMINING FIBER OPTIC RELATED REQUIREMENTS

A.1 Intent. Verify that the terminus is fully seated in the connector insert cavity by applying a force on the terminus endface.

A.2. Applicable documents.

A.2.1 General. The documents listed in this section are specified in sections 3, 4, and 5 of this standard practice. This section does not include documents cited in other sections of this standard practice or recommended for additional information or as examples. While every effort has been made to ensure the completeness of this list, document users are cautioned that they must meet all specified requirements of documents cited in sections 3, 4, and 5 of this standard practice, whether or not they are listed.

A.2.2 Government documents.

A.2.2.1 Specifications, standards, and handbooks. The following specifications, standards, and handbooks form a part of this document to the extent specified herein. Unless otherwise specified, the issues of these documents are those cited in the solicitation or contract.

DEPARTMENT OF DEFENSE SPECIFICATIONS

MIL-PRF-29504/14-	Termini, Fiber Optic, Connector, Removable, Environment Resisting, Pin Terminus, Front Release, Ceramic Ferrule, (for MIL-C-28876 Connectors.)
MIL-PRF-29504/15-	Termini, Fiber Optic, Connector, Removable, Environment Resisting, Socket Terminus, Front Release, Ceramic Ferrule (for MIL-C-28876 Connectors.)
MIL-DTL-38999-	Connectors, Electrical, Circular, Miniature, High Density, Quick Disconnect, (Bayonet Threaded and Breech Coupling), General Specification for.

(Copies of these documents are available online at http://quicksearch.dla.mil or from the Standardization Document Order Desk, 700 Robbins Avenue, Building 4D, Philadelphia, PA 19111-5094.)

A.2.3 Non-Government publications. The following documents form a part of this document to the extent specified herein. Unless otherwise specified, the issues of these documents are cited in the solicitation or contract.

ELECTRONIC COMPONENTS ASSOCIATION (ECA)

EIA-364	-	Electrical Connector/ Socket Test Procedures Including Environmental Classifications.

(Copies are available online at http://www. eciaonline.org or from Electronic Components Association, 2214 Rock Hill Rd, Suite 170, Herndon, VA 20170.)

A.2.4 Order of precedence. Unless otherwise noted herein or in the contract, in the event of a conflict between the text of this document and the references cited herein, the text of this document takes precedence. Nothing in this document, however, supersedes applicable laws and regulations unless a specific exemption has been obtained.

REQUIREMENT 6301

Source: https://assist.dla.mil -- Downloaded: 2016-12-31T21:10Z
Check the source to verify that this is the current version before use.

A.3 Considerations for applied force.

A.3.1 Maximum factors.

a. Force for retention clip. MIL-DTL-38999 specifies a retention force of 9.98 kilograms (22 pounds).

b. Only one locked finger. The retention clip in a MIL-DTL-38999 connector insert has at least two fingers. If a contact (or fiber optic terminus) is inserted at an angle, only one finger may come down and lock onto the contact (terminus) shoulder (i.e., the smaller diameter below the shoulder). The other finger(s) of the retention clip remains sitting on top of the shoulder (i.e. the larger diameter of the terminus shoulder). When mated, the action of the two termini contacting will place an additional applied load on the one locked finger. MIL-DTL-38999 specifies a retention force of 9.98 kilograms (22 pounds) with both fingers of the retention clip engaged. If only one finger is engaged, the force will be applied only to that one finger. The maximum value for the force applied must be below the force that may cause the breakage to the one engaged finger.

c. Terminus spring force. The maximum value for the force applied must be below the force that may cause damage to the terminus compression spring.

A.3.2 Minimum factors.

a. Frictional forces. Frictional forces may cause an unlocked terminus to be retained in place. Fingers on retention clip may rest on large diameter of shoulder. Retention sealing and obstructions can increase friction. Force applied must overcome the seals and any obstructions.

A.3.3 Selection criteria.

a. Upper limit. The upper limit is taken as the maximum force that can be applied and not damage the compression spring. The M29504/14 and M29504/15 termini have the lowest value for this upper limit due to the non-resiliency of the spring type used. A very conservative limit of 2.27 kilograms (5 pounds) is used so as not to discuss any proprietary information.

b. Lower limit. The lower limit is taken as applying a sufficient force to move a non fully seated terminus back into the connector insert cavity. For a M29504/14 and M29504/15 termini, each terminus is placed in the insert at a position just before the fingers on the retention clip engage the 45 degree chamfer (such as fingers sitting on the 2.64 mm (.104 inch) diameter). Applied loads of 0.45 kg, .91 kg and 1.36 kg (1, 2, and 3 pounds) were placed on the terminus. In multiple tests, it was found that a minimum force of 1.36 kg (3 pounds) is required to push the terminus through (out of) the insert. Results for the M29504/18 are similar. For a M29504/4 terminus, the test result show that the force required to move a non-fully seated terminus is less than 0.23 kg (0.5 pound). The M29504/4 pin terminus offers more conservative configuration over the M29504/5 socket terminus since additional friction must be overcome at the connector interface seal. The M29504/4 pin terminus was configured with heat shrink over jacketed cable to offer a more conservative configuration (additional fraction to overcome) at the rear grommet.

A.4 Conditions for endface configuration.

A.4.1 No fiber contact.

A.4.2 Historical basis of endface configuration (no contact with fiber). The removal of a MIL-PRF-29504/14 and MIL-PRF-29504/15 terminus is done by applying a force on the terminus endface. First, the tip of the removal tool guide depresses the terminus retention clip. Next, the plunger applies a force on the terminus end face and pushes the terminus to be removed from the rear of the connector insert. The removal tool includes design criteria to ensure that no contact with the optical fiber will occur. This tool has been used successfully by the maintainer for over 25 years.

A.5 Considerations for duration.

REQUIREMENT 6301

Source: https://assist.dla.mil -- Downloaded: 2016-12-31T21:10Z
Check the source to verify that this is the current version before use.

A.5.1 Historical basis. Military standard predecessor to EIA-364 specifies the duration of 5 to 10 seconds for the contact retention test. Several tests for verifying if electrical contacts are fully seated in the retention clips adopt a variation of this duration.

A.5.2 Determination. The applied force specified in this drawing ensures that any non-fully seated termini are pushed back prior to obtaining this force. There is no advantage to maintain the specified applied force because only fully seated termini will be subjected to the specified applied force once it is obtained.

A.6 User constraints.

A.6.1 End user process. Apply the specified force with a terminus retention clip seating tester. Next, perform a visual inspection of the terminus placement. Verify that the terminus has not been pushed back relative to the other termini in the connector insert.

A.6.2 Discrepancies verified by visual inspection. This test will verify if all fingers on the retention clip are engaged (locked). If not locked, any sufficient force applied to the terminus end face will push the terminus back further in the connector insert. This test will not determine if the terminus was inserted at an angle and in the situation that not all of the fingers have locked. If one finger has locked and the other(s) remains on the top of the shoulder (larger diameter), then the terminus will be displaced.

REQUIREMENT 6301

Source: https://assist.dla.mil -- Downloaded: 2016-12-31T21:10Z
Check the source to verify that this is the current version before use.

REQUIREMENT 6302

TERMINUS REMOVAL TOOL INTERFACE REQUIREMENTS
(FOR MIL-PRF-64266 CONNECTOR)

1. Purpose. The interface requirements for a fiber optic termini removal tool are specified herein. These interface requirements are applicable to the MIL-PRF-29504/18 and MIL-PRF-29504 /20 termini, the termini designed to be used with the MIL-PRF-64266 connector. The intent is to provide a terminus removal tool from multiple sources of supply that gives the Fleet/Field maintainer the ability to extract termini from within the connector insert from all qualified termini sources of supply. Different terminus removal tool configurations exist; however, the interface dimensions of the tool tip must conform to those of the terminus. This requirement is intended for developmental, prototype, production, rework and modification programs on military platform fiber optic cable assemblies.

1.1 Supplemental, function. The MIL-PRF-29504/18 and MIL-PRF-29504/20 terminus has two dimensions to accommodate the tool tip of a terminus removal tool. These interface dimensions are the ones cited in this requirement and are the ones that must be considered in the tip design of the terminus removal tool. The requirements for the tool tip function are cited in 4.1.

1.2 Supplemental, item number. Item number assigned to the MIL-PRF-29504/18 and MIL-PRF-29504/20 terminus removal tool is 6206CC (see Requirement 6206).

2. Applicable documents.

2.1 General. The documents listed in this section are specified in sections 3, 4, and 5 of this standard practice. This section does not include documents cited in other sections of this standard practice or recommended for additional information or as examples. While every effort has been made to ensure the completeness of this list, document users are cautioned that they must meet all specified requirements of documents cited in sections 3, 4, and 5 of this standard practice, whether or not they are listed.

2.2 Government documents.

2.2.1 Specifications, standards, and handbooks. The following specifications, standards, and handbooks form a part of this document to the extent specified herein. Unless otherwise specified, the issues of these documents are those cited in the solicitation or contract.

DEPARTMENT OF DEFENSE SPECIFICATIONS

MIL-PRF-29504/18-	Termini, Fiber Optic, Connector, Removable, Environment Resisting, GenderlessTerminus, Rear Release, Ceramic Ferrule, 1.25 MM Ferrule, (for MIL-PRF-64266 Connectors).
MIL-PRF-64266-	Connectors, Fiber Optic, Circular and Rectangular, Plug and Receptacle Style, Multiple Removable Genderless Termini, Environment Resisting General Specification for

(Copies of these documents are available online at http://quicksearch.dla.mil or from the Standardization Document Order Desk, 700 Robbins Avenue, Building 4D, Philadelphia, PA 19111-5094.)

Source: https://assist.dla.mil -- Downloaded: 2016-12-31T21:10Z
Check the source to verify that this is the current version before use.

2.3 Other Government documents, drawings, and publications. The following other Government documents, drawings, and publications form a part of this standard practice to the extent specified herein. Unless otherwise specified, the issues are these documents are those cited in the solicitation or contract.

NAVAIR 01-1A-505-4/ T.O. 1-1A-14-4/TM 1-1500-232-24-4-	Installation and Testing Practices, Aircraft Fiber Optic Cabling

(A copy of this document is available online at: https://mynatec.navair.navy.mil. NATEC has three different processes to obtain the manual, depending on if you are Government personnel (military and civilians), Contractors with a Government contract, or everyone else. If unable to access this Web Site or require further assistance, contact (1) NATEC Customer Service: 619.545.1888, (2) NATEC Website Status Hotline: 619.545.1706, or (3) NATEC Customer Service E-mail: nani_customerservice@navy.mil.)

2.4 Order of precedence. Unless otherwise noted herein or in the contract, in the event of a conflict between the text of this document and the references cited herein, the text of this document takes precedence. Nothing in this document, however, supersedes applicable laws and regulations unless a specific exemption has been obtained.

3. Definitions.

3.1 Alignment sleeve. A cylindrical, split ceramic tube that provides the mechanical and optical alignment of two mating connector/terminus ferrules.

3.2 Alignment sleeve retainer. An alignment sleeve retainer is a separate and removable housing used within the connector shell to retain captive alignment sleeves. The alignment sleeve retainer is part of the MIL-PRF-64266 connector. Use of an alignment sleeve retainer allows a one, genderless (really pin) terminus to be used in both the MIL-PRF-64266 connector plug and the connector receptacle. Functional/optical alignment is provided by the alignment sleeve retainer thorough the use of guide pins and alignment sleeves. A captive “jackscrew”, which is a part of the alignment sleeve retainer, retains the alignment sleeve retainer within the connector shell.

3.3 ASR. Alignment sleeve retainer.

3.4 Termini. A component used in a fiber optic, multiple termini, connection that is inserted into one of the insert cavities of a multiple termini connector, provides a means to break and rejoin an optical path, and is terminated onto the end of a simplex, fiber optic cable. The term “termini” is the plural form for the word terminus.

3.5 Terminus. Singular form for the word termini.

3.6 Terminus removal tool. A tool used as a means to extract a fiber optic terminus that is seated properly within the insert of a multiple termini connector.

4. Requirements. The tip of the fiber optic terminus removal tool shall be standardized for commonality compliance across platforms to ensure the ability to extract MIL-PRF-29504/18 and MIL-PRF-29504/20 termini from the insert of a MIL-PRF-64266 multiple termini connector. Commonality compliance is that in which bounds or restricts the parts to those recognized by the Joint Fiber Optic Working Group (JFOWG), cited in the General Series Technical Manual for Fiber Optic Cabling (NAVAIR 01-1A-505-1/T.O. 1-1A-14/TM 1-1500-232-24-4) and, as a result, cited in this Standard Practice. Requirements for the terminus removal tool interface with the termini shall comply with 4.1 through 4.4.

4.1 Function. The function of the terminus removal tool tip shall be to fit around the cylindrical surface of the terminus retention clip and, with an applied upward (i.e., towards the rear of the terminus) load (force), press against the surface of the rear “lip” on the retention clip for terminus extraction.

REQUIREMENT 6302

Source: https://assist.dla.mil -- Downloaded: 2016-12-31T21:10Z
Check the source to verify that this is the current version before use.

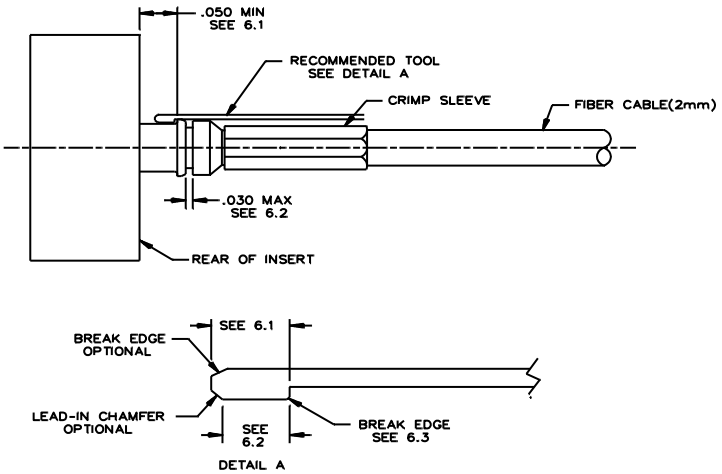

FIGURE 6302 - 1 Tool tip interface with retention clip.

4.2 Dimensional requirements.

4.2.1 Retention clip exposure length. The dimension for the tool tip that interfaces with the exposed length of the retention clip shall be designed to accommodate the dimensions specified in MIL-PRF-29504/18 and /20 (see figure 6302-1).

4.2.2 Gap length. The dimension for the tool tip that interfaces with the exposed length of the retention clip shall be designed to accommodate the maximum gap length in MIL-PRF-29504/18 and MIL-PRF-29504/20 (see FIGURE 6302 - 1). This gap length is the one between the back of the retention clip and the front (leftmost surface) of the rear shoulder. This gap length is the resultant exposed length (or gap) when the retention clip is in the most forward position in an unmated condition.

4.3 Materials. Terminus removal tool material shall meet the durability, corrosion and applied load requirements of 4.3.1 through 4.3.3.

4.3.1 Durability. Material used for the tool tip shall be durable to survive 1000 extractions (termini removals) without showing any signs of wear and degradation in function.

REQUIREMENT 6302

Source: https://assist.dla.mil -- Downloaded: 2016-12-31T21:10Z
Check the source to verify that this is the current version before use.

4.3.2 Corrosion. Material used for the tool tip shall be corrosion resistant. If provided with a stainless steel tool tip, 303 stainless steel is acceptable.

4.3.3 Applied load requirement. See 4.4.

4.4 Applied load. Tool tip shall allow a specified force (load) of 22 ± 1 lb to be applied.

5. Implementation. Unless otherwise specified by the applicable Platform Office, fiber optic terminus removal tool shall incorporate the interface dimensions in figure 6302 - 1 and the interface requirements of 4.1 through 4.4. Verification of these requirements shall comply with 5.1 through 5.4.

5.1 Responsibility. Unless otherwise specified by the procuring activity, the supplier is responsible for the performance of all items contained herein with regard to the above requirements.

5.2 Performance verification. Dimensional data for the tool tip and load test data for the applied load may be provided to demonstrate performance; however, the Procuring Activity reserves the right to perform any of the inspections specified. When specified, test samples shall be submitted to the designated Design Activity for approval.

5.3 Performance demonstration with fully populated connectors. When specified, test data submitted shall include verification for demonstration of successful terminus extraction from each insert cavity position in each shell size connector. As an alternative, selected insert cavity positions may be specified instead.

5.4 Restrictions. Terminus extraction from the insert cavity shall be performed on unmated connector plugs and unmated connector receptacles with the alignment sleeve retainer (ASR) removed.

6. Notes.

6.1 Intended use. On these platforms, the fiber optic terminus removal tool are used to extract termini from a MIL-PRF-64266 multiple termini connector, are a part of (1) cable harnesses, and (2) equipment (electronic module/package) such as a ATR, LRC, LRM, LRU or WRA with internal fiber optics.

6.2 Retention clip exposure length. Interface length of the tool tip (i.e., the length that interfaces with the exposed length of the retention clip) should be designed to accommodate (or be sufficiently shorter than) the MIL-PRF-29504/18 and MIL-PRF-29504/20 specified minimum length between the rear “lip” of the retention clip and the rear of the connector insert. This dimension (specified as .050 minimum) is the resultant length when the retention clip is in the most forward position in a connector insert that is unmated (not a part of a mated pair).

6.3 Gap length. Interface length of the tool tip (i.e., the length that interfaces with the exposed length of the retention clip) should be designed to prevent egress into the gap behind the retention clip. Specifically, this gap (specified as .030 maximum) is between the back of the retention clip and the front (leftmost surface) of the rear shoulder. This gap is measured when the retention clip is in the most forward position in a connector insert that is unmated (not a part of a mated pair). The tool tip should be sufficiently longer than the maximum allowed dimension for the gap.

6.4 Damage prevention to cabling. The practice to “break edges” should be implemented to reduce the potential of the tool tip grabbing, nicking or scrapping the cable jacket when the tool tip is brought into contact with the cable jacket. Also, this is a recommended safety measure to prevent potential injury to personnel handling the terminus removal tool.

REQUIREMENT 6302

Source: https://assist.dla.mil -- Downloaded: 2016-12-31T21:10Z
Check the source to verify that this is the current version before use.

FERRULE END FACE CLEANING SWAB AND TOOL INTERFACE REQUIREMENTS
(THROUGH MIL-PRF-64266 TEST TERMINUS ADAPTER)

1. Purpose. The interface requirements for cleaning of the fiber optic termini through a test terminus adapter (see 6.4) are specified herein. These interface requirements are applicable to cleaning swabs and tools to clean the ferrule end faces of the MIL-PRF-29504/18 and MIL-PRF-29504/20 termini when a test terminus adapter is affixed to (threaded onto) the MIL-PRF-64266 connector. The intent is to provide envelop dimensions to enable selection from multiple sources of supply. Different swab and tool configurations exist; however, the interface dimensions provided must be used to verify acceptable swab/tool insertion through the test terminus adapter to the termini. This requirement is intended for developmental, prototype, production, rework and modification programs on military platform fiber optic cable assemblies.

1.1 Supplemental, function. The cleaning swab or tool used to clean the ferrule end face of a MIL-PRF-29504/18 and MIL-PRF-29504/20 terminus through a test terminus adapter must not exceed envelop dimension that would not permit insertion through the test terminus adapter. Also, the cleaning swab or tool must be adequate to pass through the fingers of a retaining clip within each cavity of the test terminus adapter These interface considerations are the ones that must be considered in the design of the ferrule end face cleaning tool when used through a test terminus adapter. The requirements are cited in 4.1.

1.2 Supplemental, item number. Item numbers assigned to the ferrule end face cleaning tools that can be inserted through a test terminus adapter are 6201AK (see Requirement 6201).

2. Applicable documents.

2.1 General. The documents listed in this section are specified in sections 3, 4, and 5 of this standard practice. This section does not include documents cited in other sections of this standard practice or recommended for additional information or as examples. While every effort has been made to ensure the completeness of this list, document users are cautioned that they must meet all specified requirements of documents cited in sections 3, 4, and 5 of this standard practice, whether or not they are listed.

2.2 Government documents.

2.2.1 Specifications, standards, and handbooks. The following specifications, standards, and handbooks form a part of this document to the extent specified herein. Unless otherwise specified, the issues of these documents are those cited in the solicitation or contract.

DEPARTMENT OF DEFENSE SPECIFICATIONS

MIL-PRF-29504/18-	Termini, Fiber Optic, Connector, Removable, Environment Resisting, GenderlessTerminus, Rear Release, Ceramic Ferrule, 1.25 MM Ferrule, (for MIL-PRF-64266 Connectors).
MIL-PRF-29504/20-	Termini, Keyed, Fiber Optic Connector, Removable, Environment Resisting,Genderless Terminus, Rear Release, Ceramic Ferrule, 1.25 MM Ferrule, (For MIL-PRF-64266 Connectors).
MIL-PRF-64266-	Connectors, Fiber Optic, Circular and Rectangular, Plug and Receptacle Style, Multiple Removable Genderless Termini, Environment Resisting General Specification for

(Copies of these documents are available online at http://quicksearch.dla.mil or from the Standardization Document Order Desk, 700 Robbins Avenue, Building 4D, Philadelphia, PA 19111-5094.)

Source: https://assist.dla.mil -- Downloaded: 2016-12-31T21:10Z
Check the source to verify that this is the current version before use.

2.3 Other Government documents, drawings, and publications. The following other Government documents, drawings, and publications form a part of this standard practice to the extent specified herein. Unless otherwise specified, the issues are these documents are those cited in the solicitation or contract.

NAVAIR 01-1A-505-4/ T.O. 1-1A-14-4/TM1-1500-232-24-4-	Installation and Testing Practices, Aircraft Fiber Optic Cabling

(A copy of this document is available online at: https://mynatec.navair.navy.mil. NATEC has three different processes to obtain the manual, depending on if you are Government personnel (military and civilians), Contractors with a Government contract, or everyone else. If unable to access this Web Site or require further assistance, contact (1) NATEC Customer Service: 619.545.1888, (2) NATEC Website Status Hotline: 619.545.1706, or (3) NATEC Customer Service E-mail: nani_customerservice@navy.mil.)

2.4 Order of precedence. Unless otherwise noted herein or in the contract, in the event of a conflict between the text of this document and the references cited herein, the text of this document takes precedence. Nothing in this document, however, supersedes applicable laws and regulations unless a specific exemption has been obtained.

3. Definitions.

3.1 Alignment sleeve. A cylindrical, split ceramic tube that provides the mechanical and optical alignment of two mating connector/terminus ferrules.

3.2 Alignment sleeve retainer. An alignment sleeve retainer is a separate and removable housing used within the connector shell to retain captive alignment sleeves. The alignment sleeve retainer is part of the MIL-PRF-64266 connector. Use of an alignment sleeve retainer allows a one, genderless (really pin) terminus to be used in both the MIL-PRF-64266 connector plug and the connector receptacle. Functional/optical alignment is provided by the alignment sleeve retainer thorough the use of guide pins and alignment sleeves. A captive “jackscrew”, which is a part of the alignment sleeve retainer, retains the alignment sleeve retainer within the connector shell.

3.3 ASR. Alignment sleeve retainer.

3.4 Swab, cleaning. A stick containing a lint-free, particulate and fluid absorbing pad on one or both ends and used to clean the ferrule end faces of fiber optic connectors and termini.

3.5 Termini. A component used in a fiber optic, multiple termini, connection that is inserted into one of the insert cavities of a multiple termini connector, provides a means to break and rejoin an optical path, and is terminated onto the end of a simplex, fiber optic cable. The term “termini” is the plural form for the word terminus.

3.6 Terminus. Singular form for the word termini.

3.7 Tool, cleaning. A device or mechanical machine that contains (1) a cleaning cartridge, tape or ribbon; (2) a means to advance the cleaning cartridge, tape or ribbon; (3) a lint-free, particulate and fluid absorbing media on the cleaning cartridge, tape or ribbon that is used to clean the ferrule end faces of fiber optic connectors and termini; (4) and is configured with a tip to allow access for cleaning the ferrule end faces of fiber optic connectors and termini.

4. Requirements. The interface (envelop) dimensions of the cleaning swab or tool shall be standardized for commonality compliance across platforms to ensure the ability to clean the ferrule end faces of MIL-PRF-29504/18 and MIL-PRF-29504/20 termini through a test terminus adapter when these termini are inserted into a MIL-PRF-64266 multiple termini connector). Commonality compliance is that in which bounds or restricts the parts to those recognized by the Joint Fiber Optic Working Group (JFOWG), cited in the General Series Technical Manual for Fiber Optic Cabling (NAVAIR 01-1A-505-1/T.O. 1-1A-14/TM 1-1500-232-24-4) and, as a result, cited in this Standard Practice. Requirements for the terminus removal tool interface with the termini shall comply with 4.1 through 4.4.

REQUIREMENT 6303

Source: https://assist.dla.mil -- Downloaded: 2016-12-31T21:10Z
Check the source to verify that this is the current version before use.

4.1 Functional. The cleaning swab or tool shall be capable of being inserted through a test terminus adapter to clean the ferrule end face of the terminus.

4.2 Dimensional.

4.2.1 Diameters. The diameters at the tip that interfaces with the test terminus adapter and ferrule end face shall be designed to fit into the envelop dimensions specified in figure 6303 – 1.

4.2.2 Lengths. The linear dimensions or lengths at the tip that interfaces with the test terminus adapter and ferrule end face shall be designed to fit into the envelop dimensions specified in figure 6303-1.

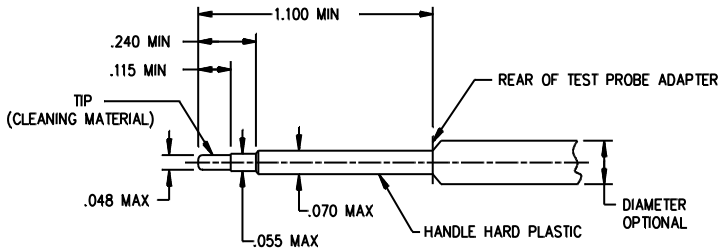

FIGURE 6303 – 1. Cleaning swab/tool interface dimensions for MIL-PRF-64266 test terminus adapter.

4.3 Material. Terminus removal tool material shall meet the durability, corrosion and applied load requirements of 4.3.1 through 4.4.

4.3.1 Hardness. Material used for the swab stick (handle) or tool housing shall be sufficiently hard to survive the insertion and extraction (terminus removal) through the fingers of the retaining clip within a test terminus adapter. For cleaning tools, the cleaning tool housing shall survive 1000 insertions and extractions without showing any signs of wear and degradation in function.

4.3.2 Fungus resistant. Material used for the cleaning tool housing shall be fungus resistant type plastic.

4.4 Applied load. The cleaning swab or tool shall fit through the test terminus adapter without any external load applied.

5. Implementation. Unless otherwise specified by the applicable Platform Office, fiber optic cleaning swabs and tools specified for use through a test terminus adapter shall incorporate the interface requirements of 4.1 through 4.4. Verification of these requirements shall comply with 5.1 through 5.4.

5.1 Responsibility. Unless otherwise specified by the procuring activity, the supplier is responsible for the performance of all items contained herein with regard to the above requirements.

5.2 Performance verification. Dimensional and material data for the cleaning swab or tool tip along with verification that an applied load is not required for obtaining access to the ferrule end face may be provided to demonstrate performance; however, the Procuring Activity reserves the right to perform any of the inspections specified. When specified, test samples shall be submitted to the designated Design Activity for approval.

5.3 Performance demonstration with fully populated connectors. When specified, test data submitted shall include verification for demonstration of successful cleaning of each insert cavity position in each shell size connector. As an alternative and when specified, selected insert cavity positions may be specified instead.

REQUIREMENT 6303

Source: https://assist.dla.mil -- Downloaded: 2016-12-31T21:10Z
Check the source to verify that this is the current version before use.

5.4 Restrictions. Terminus cleaning of the insert cavity shall be performed on unmated connector plugs with no alignment sleeve retainer (ASR). Terminus cleaning of the insert cavity shall be performed on unmated connector receptacles with the alignment sleeve retainer (ASR) in place.

6. Notes.

6.1 Intended use. On these platforms, the fiber optic cleaning swabs and tools are used to clean the ferrule end face of termini in a MIL-PRF-64266 multiple termini connector through a test terminus adapter. These connectors are a part of or can be found on (1) cable harnesses and (2) equipment (electronic module/package) such as an ATR, LRC, LRM, LRU or WRA with internal fiber optics.

6.2 Dimensional constraints. Dimension of .048 MAX is based on a maximum ferrule diameter of 1.25 mm (0.049 inch).

6.3 Material considerations. Material should be sufficiently hard to withstand travel through the fingers of the retaining clip within each cavity of the test terminus adapter.

REQUIREMENT 6303

Source: https://assist.dla.mil -- Downloaded: 2016-12-31T21:10Z
Check the source to verify that this is the current version before use.

POLISHING PUCK INTERFACE REQUIREMENTS
(FOR PC and APC POLISHING OF FERRULE END FACES)

1. Purpose. The interface requirements for a fiber optic termini polishing puck (tool) are specified herein. These interface requirements are applicable to the fiber optic termini (such as the MIL-PRF-29504/4, MIL-PRF-29504/5, MIL-PRF-29504/14, MIL-PRF-29504/15, MIL-PRF-29504/18 and MIL-PRF-29504/20 termini, the test probe used in MIL-DTL-38999 and the MIL-PRF-29504 test termini used in MIL-PRF-28876 and MIL-PRF-64266 multiple termini connectors) and are applicable for single ferrule connectors (such as the FC, LC, SC and ST connectors). The intent is to provide polishing pucks from multiple sources of supply that gives the Fleet/Field maintainer the ability to polish the applicable configuration terminus or single ferrule connector from all qualified termini sources of supply. Different polishing puck configurations exist; however, the interface dimensions of the tool tip must conform to those of the specific terminus or single ferrule connector and polish type (PC or APC polish). This requirement is intended for developmental, prototype, production, rework and modification programs on military platform fiber optic cable assemblies.

1.1 Supplemental, item number. Item number assigned to approved polishing pucks are found in Requirement 6204.

2. Applicable documents.

2.1 General. The documents listed in this section are specified in sections 3, 4, and 5 of this standard practice. This section does not include documents cited in other sections of this standard practice or recommended for additional information or as examples. While every effort has been made to ensure the completeness of this list, document users are cautioned that they must meet all specified requirements of documents cited in sections 3, 4, and 5 of this standard practice, whether or not they are listed.

2.2 Government documents.

2.2.1 Specifications, standards, and handbooks. The following specifications, standards, and handbooks form a part of this document to the extent specified herein. Unless otherwise specified, the issues of these documents are those cited in the solicitation or contract.

DEPARTMENT OF DEFENSE SPECIFICATIONS

MIL-PRF-29504-	Termini, Fiber Optic Connector, Removable, General Specification For.
MIL-PRF-29504/4-	Termini, Fiber Optic, Connector, Removable, Environment Resisting, Pin Terminus, Size 16, Rear Release, MIL-DTL-38999, Series III.
MIL-PRF-29504/5-	Termini, Fiber Optic, Connector, Removable, Environment Resisting, Socket Terminus, Size 16, Rear Release, MIL-DTL-38999, Series III.
MIL-PRF-29504/14-	Termini, Fiber Optic, Connector, Removable, Environment Resisting, Pin Terminus, Front Release, Ceramic Ferrule, (for MIL-PRF-28876 Connectors).
MIL-PRF-29504/15-	Termini, Fiber Optic, Connector, Removable, Environment Resisting, Socket Terminus, Front Release, Ceramic Ferrule, (for MIL-PRF-28876 Connectors).
MIL-PRF-29504/18-	Termini, Fiber Optic, Connector, Removable, Environment Resisting, Genderless Terminus, Rear Release, Ceramic Ferrule, 1.25 MM Ferrule, (for MIL-PRF-64266 Connectors).
MIL-PRF-29504/20-	Test terminus, Fiber Optic, Keyed, Connector, Removable, Environment Resisting, Genderless Terminus, Rear Insert/Rear Release, 1.25 mm Ceramic Ferrule, (for MIL-PRF-64266 Connectors).
MIL-PRF-29504/21-	Test Terminus, Fiber Optic, Keyed, Removable, Use in Optical Loss and Optical Continuity Testing, Rear Insert/Rear Release Through a Test Terminus Adapter, 1.25 mm Ceramic Ferrule, 1.25 mm Ferrule, (for MIL-PRF-64266 Connectors).

Source: https://assist.dla.mil -- Downloaded: 2016-12-31T21:10Z
Check the source to verify that this is the current version before use.

MIL-DTL-38999-	Connectors, Electrical, Circular, Miniature, High Density, Quick Disconnect, (Bayonet Threaded and Breech Coupling), General Specification for.
MIL-PRF-64266-	Connectors, Fiber Optic, Circular and Rectangular, Plug and Receptacle Style, Multiple Removable Genderless Termini, Environment Resisting General Specification for
MIL-DTL-83522 -	Connectors, Fiber Optic, Single Terminus, General Specification for.

(Copies of these documents are available online at http://quicksearch.dla.mil or from the Standardization Document Order Desk, 700 Robbins Avenue, Building 4D, Philadelphia, PA 19111-5094.)

2.3 Other Government documents, drawings, and publications. The following other Government documents, drawings, and publications form a part of this standard practice to the extent specified herein. Unless otherwise specified, the issues are these documents are those cited in the solicitation or contract.

NAVAIR 01-1A-505-4/ T.O. 1-1A-14-4/TM 1-1500-232-24-4- Installation and Testing Practices, Aircraft Fiber Optic Cabling

(A copy of this document is available online at: https://mynatec.navair.navy.mil. NATEC has three differentprocesses to obtain the manual, depending on if you are Government personnel (military and civilians), Contractors with a Government contract, or everyone else. If unable to access this Web Site or require further assistance, contact (1) NATEC Customer Service: 619.545.1888, (2) NATEC Website Status Hotline: 619.545.1706, or (3) NATEC Customer Service E-mail: nani_customerservice@navy.mil.)

2.4 Non-Government publications. The following documents form a part of this document to the extent specified herein. Unless otherwise specified, the issues of these documents are cited in the solicitation or contract.

TELECOMMUNICATIONS INDUSTRY ASSOCIATION

TIA-604-1- FOCIS 1 FIBER OPTIC CONNECTOR INTERMATEABILITY STANDARD

(Copies are available online at www.tiaonline.org/standards/catalog/index.cfm or from TIA, 2500 Wilson Boulevard, Suite 300, Arlington, VA 22201, USA, ATTN: Standards Department.

2.5 Order of precedence. Unless otherwise noted herein or in the contract, in the event of a conflict between the text of this document and the references cited herein, the text of this document takes precedence. Nothing in this document, however, supersedes applicable laws and regulations unless a specific exemption has been obtained.

3. Definitions.

3 1 Connector, fiber optic. A device that permits repeated mating and couples the optical power between two optical fibers or two groups of optical fibers. A fiber optic connector must maintain fiber alignment without significant loss of optical power.

3.2 Connector, LC. The Lampert connector or Lucent connector (LC) is a single ferrule connector with a 1.25 mm (.05 inch) ferrule diameter, a push-pull style attachment configuration to the mating an LC-to-LC adapter/patch panel or equipment interface port, and a butt-jointed connector design. The LC connector has a small form factor configuration that has the same footprint as a RJ-45 receptacle.

3.3 Polish, non-contact (NC). Ferrule end face is polished in a manner so that the fibers are the first to make contact when connection surfaces are mated together.

3.4 Polish, physical contact (PC). Ferrule end face is polished in a manner so that the fibers are the first to make contact when connection surfaces are mated together.

3.5 Polishing puck (tool), APC polish. A fixture used in the polishing process to hold the ferrule of a single ferrule connector or a terminus so that ferrule end face is at an 8 degree angle from the perpendicular and extends below the fixture's flat bottom.

REQUIREMENT 6304

Source: https://assist.dla.mil -- Downloaded: 2016-12-31T21:10Z
Check the source to verify that this is the current version before use.

3.6 Polishing puck (tool), PC polish. A fixture used in the polishing process to hold the ferrule of a single ferrule connector or a terminus so that ferrule end face is perpendicular to and extends below the fixture's flat bottom.

3.7 Termini. A component used in a fiber optic, multiple termini, connection that is inserted into one of the insert cavity of a multiple termini connector and terminated onto the end of a simplex, fiber optic cable. Termini is the plural form for the word terminus.

3.8 Terminus. Singular form for the word termini.

3.9 Terminus, pin. The male configuration of a terminus that consists of a metal barrel (body) and a metal or ceramic ferrule.

3.10 Terminus, socket. The female configuration of a terminus that consists of a metal barrel (body), a metal or ceramic ferrule and an alignment sleeve. The alignment sleeve attaches to the socket terminus ferrule. Fiber alignment occurs when the pin terminus slides into the alignment sleeve of the socket terminus.

3.11 Test probe. A single fiber MQJ that is configured with a connector at one end to mate with the test equipment and a connector referred to as "test probe" at the other end. The test probe is test connector that is used to test one terminus at a time within a MIL-DTL-38999 connector. This test probe is inserted into the cavity of a test probe adapter. The test probe adapter is mated to the MIL-DTL-38999 connector.

3.12 Test probe adapter. An adapter that mates with the MIL-DTL-38999 multiple termini connector plug or the MIL-DTL-38999 connector receptacle under test and that contains the insert cavity configuration to mate with and lock a test probe in place.

3.13 Test terminus. A single fiber MQJ that is configured with a connector at one end to mate with the test equipment and a connector referred to as "test terminus" at the other end. The test terminus is test connector that is used to test one terminus at a time within a MIL-PRF-64266 connector. This test terminus is inserted into the cavity of a test terminus adapter. The test terminus adapter is mated to the MIL-PRF-64266 connector.

3.14 Test terminus adapter. An adapter that mates with the MIL-PRF-64266 multiple termini connector plug or the MIL-PRF-64266 connector receptacle under test and that contains the insert cavity configuration to mate with and lock a test terminus in place.

4. Requirements. The dimensions and interface features of the fiber optic polishing puck shall be standardized for commonality compliance across platforms to ensure the ability to place the specified end face geometry onto the end face of the single ferrule connector or terminus ferrule. Commonality compliance is that in which bounds or restricts the parts to those recognized by the Joint Fiber Optic Working Group (JFOWG) and, as a result, cited in this Standard Practice. Requirements for the polishing puck shall comply with 4.1 through 4.4.

4.1 Configuration. Polishing pucks shall be standardized to the extent that interoperability with any of the same type (such as pin or socket) and configuration (per a military specification sheet) single ferrule connector or terminus is achieved by the polishing puck accommodating the minimum length for ferrule protrusion.

4.2 Dimensional requirements. Polishing puck shall meet the dimensional requirements of 4.2.1 through 4.2.4 and figure 6304 - 1.

4.2.1 Interface with ferrule. The standardized polishing puck shall accommodate the specified single ferrule connector or terminus with the maximum envelope dimensions, as defined in military specification sheet.

4.2.2 Length of ferrule protrusion from the terminus barrel (body). Polishing puck shall be designed to accommodate a minimum exposed ferrule length or minimum ferrule protrusion from the single ferrule connector or terminus barrel (body).

4.2.3 Ferrule perpendicularity. The single ferrule connector or terminus ferrule shall be retained in the standardized polishing puck so that it remains perpendicular, along its axial (versus radial) direction, to the polishing surface of the polishing puck. For an APC polishing puck, this requirement shall be offset by an 8 degree angle.

REQUIREMENT 6304

Source: https://assist.dla.mil -- Downloaded: 2016-12-31T21:10Z
Check the source to verify that this is the current version before use.

4.2.4 Interface documents. For fiber optic termini, the applicable specification sheets include MIL-PRF-29504/4, MIL-PRF-29504/5, MIL-PRF-29504/14, MIL-PRF-29504/15, MIL-PRF-29504/18, MIL-PRF-29504/20 and MIL-PRF-29504/21. For single ferrule connectors, the applicable military specification is MIL-DTL-83522. Otherwise, interface document used for a single ferrule connector shall conform to the applicable TIA-604-1 fiber optic connector intermateability standard.

4.3 Mechanical requirements. Polishing puck shall meet the mechanical requirements of 4.3.1 through 4.3.3.

4.3.1 Envelope dimension. The standardized polishing puck shall accommodate a single ferrule connector or terminus with the maximum envelope dimensions, as defined in the military specification sheet or applicable interface document.

4.3.2 Grooved polishing surface. Standardized polishing pucks shall not be grooved. Grooved polishing pucks have been found to retain debris from the polishing film and other grit in the grooves.

4.3.3 Sufficiently large exiting diameter for cable assembly. This requirement is applicable if the specific polishing puck design includes a collar or other restriction. Standardized polishing puck shall have a sufficiently large diameter opening to allow rear of single ferrule connector/terminus barrel (body) fit into the polishing puck when shrink sleeve/tubing, aramid yarn (such as Kevlar) bunches up or other fabrication anomalies require the opening to be increased.

4.3.4 Diameter of the polishing puck. The polishing puck shall be between 1.5 to 2.0 inches in diameter. The smaller the ferrule diameter, the larger should be the polishing puck diameter.

4.3.5 Hole tolerance. A tight fit is required on this polishing puck hole diameter that interfaces with the ferrule. A tolerance of + .001/-.000 inches is preferable, but may be difficult to implement.

4.4 Physical requirements. Polishing puck shall meet the physical requirements of 4.4.1 and 4.4.2.

4.4.1 Grip. Polishing puck shall be configured to grasp both the single ferrule connector/terminus barrel (body) and the polishing puck interface (such as a collar).

4.4.2 Applied weight. Polishing puck shall be designed to glide easily when an applied weight (i.e., hand pressure) is placed on the polishing puck during the polishing process.

4.5 Material requirements. Polishing puck shall meet the durability and corrosion requirements of 4.5.1 through 4.5.3.

4.5.1 Durability. Material used for the polishing puck shall be metal that is sufficiently durable to survive 1000 polishes (with each polish consisting of a minimum of three polishing steps) without showing any signs of wear and degradation in function.

4.5.2 Corrosion. Material used for the polishing puck shall be corrosion resistant. If provided with a stainless steel tool tip, 303 stainless steel is acceptable.

4.5.3 Surface finish. Unless otherwise specified, the same polishing puck is intended for use in each step of the polishing process. When specified, two polishing pucks shall be provided for the initial (course and intermediate) and final (fine) polishing steps. The polishing puck for the fine polish shall be mirrored on the surface that interfaces with the polishing film (paper) to a .032 finish minimum and .064 finish preferred.

REQUIREMENT 6304

Source: https://assist.dla.mil -- Downloaded: 2016-12-31T21:10Z
Check the source to verify that this is the current version before use.

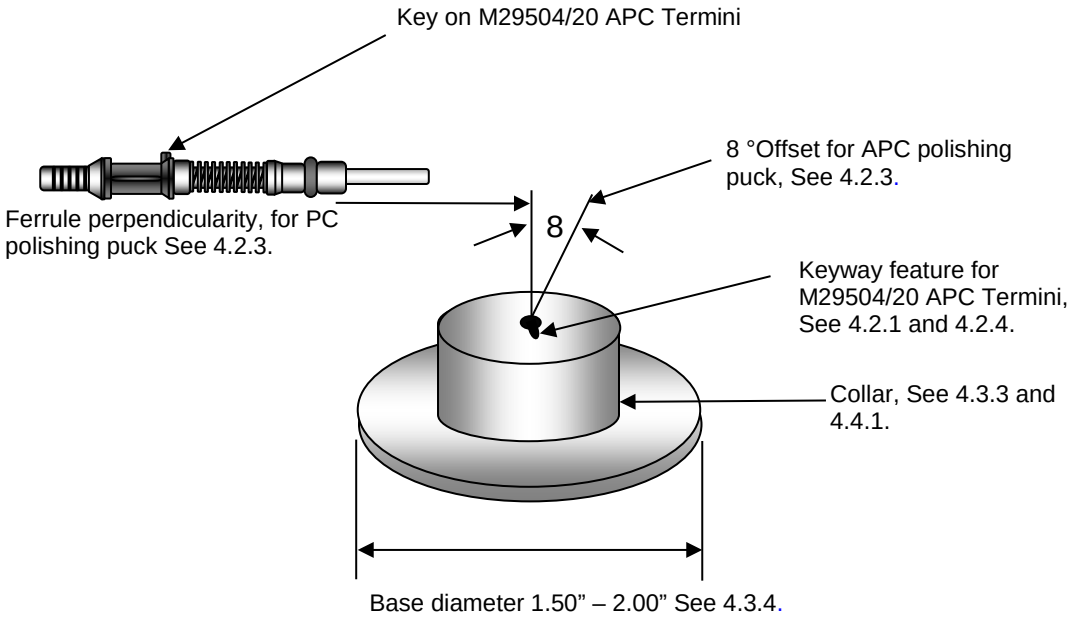

FIGURE 6304 - 1 Polishing puck dimensions and interface features.

4.6 Alterative tools. A machine polish may be used in lieu of a hand polish. Alternate tool (machine or polishing puck) is allowed for preparation of qualification test samples as long as required end face geometry is produced.

5. Implementation. Unless otherwise specified by the applicable Platform Office, fiber optic polishing puck shall incorporate the interface dimensions in above figure 6304 - 1 and the interface requirements of 4.1 through 4.5. Verification of these requirements shall comply with 5.1 through 5.4.

5.1 Responsibility. Unless otherwise specified by the procuring activity, the supplier is responsible for the performance of all items contained herein with regard to the above requirements.

5.2 Performance verification. Dimensional data for polishing puck may be provided to demonstrate performance; however, the Procuring Activity reserves the right to perform any of the inspections specified to verify suitable end face geometry is being obtained. Unless otherwise specified, test samples shall be submitted to the designated Design Activity for approval.

5.3 Performance demonstration for insertion and removal. When specified, test data submitted shall include verification for demonstration of successful single ferrule connector or terminus insertion and extraction from the polishing puck.

5.4 Restrictions. When specified or for shipboard applications test data shall include the ferrule height obtained.

6. Notes.

6.1 Intended use. On these platforms, the fiber optic polishing puck are used to polish termini for a single ferrule connectors/ termini that are a part of (1) cable harnesses, and (2) equipment (electronic module/package) such as a ATR, LRC, LRM, LRU or WRA with internal fiber optics.

REQUIREMENT 6304

Source: https://assist.dla.mil -- Downloaded: 2016-12-31T21:10Z
Check the source to verify that this is the current version before use.

FERRULE LENGTH GAUGE INTERFACE REQUIREMENTS (FOR PROTRUSION LENGTH OF FERRULE END FACES)

1. Purpose. The interface requirements for a fiber optic ferrule length gauge are specified herein. Along with the ferrule end face geometry and ferrule end face visual inspection, the ferrule length is identified as one criterion for refurbishment of the ferrule end face. These interface requirements are applicable to the fiber optic termini (such as the MIL-PRF-29504/4, MIL-PRF-29504/5, MIL-PRF-29504/14, MIL-PRF-29504/15, MIL-PRF-29504/18 and MIL-PRF-29504/20 termini, the test probe used in MIL-DTL-38999 and the MIL-PRF-29504/21 test terminus used in MIL-PRF-28876 and, MIL-PRF-64266 multiple termini connectors) and are applicable for single ferrule connectors (such as the FC, LC, SC and ST connectors). The intent is to provide this tool from multiple sources of supply that gives the Fleet/Field maintainer the ability to measure ferrule protrusion length of a terminus or single ferrule connector from all qualified termini sources of supply. Different potential configurations exist; however, the interface dimensions of the plunger tip and fixture must conform to those of the specific terminus or single ferrule connector and polish type (PC or APC polish). This requirement is intended for developmental, prototype, production, rework and modification programs on military platform fiber optic cable assemblies.

1.1 Supplemental, item number. Item number 6203JA assigned to the ferrule length gauge is found in Requirement 6203.

2. Applicable documents.

2.1 General. The documents listed in this section are specified in sections 3, 4, and 5 of this standard practice. This section does not include documents cited in other sections of this standard practice or recommended for additional information or as examples. While every effort has been made to ensure the completeness of this list, document users are cautioned that they must meet all specified requirements of documents cited in sections 3, 4, and 5 of this standard practice, whether or not they are listed.

2.2 Government documents.

2.2.1 Specifications, standards, and handbooks. The following specifications, standards, and handbooks form a part of this document to the extent specified herein. Unless otherwise specified, the issues of these documents are those cited in the solicitation or contract.

DEPARTMENT OF DEFENSE SPECIFICATIONS

MIL-PRF-29504-	Termini, Fiber Optic Connector, Removable, General Specification For.
MIL-PRF-29504/4-	Termini, Fiber Optic, Connector, Removable, Environment Resisting, Pin Terminus, Size 16, Rear Release, MIL-DTL-38999, Series III.
MIL-PRF-29504/5-	Termini, Fiber Optic, Connector, Removable, Environment Resisting, Socket Terminus, Size 16, Rear Release, MIL-DTL-38999, Series III.
MIL-PRF-29504/14-	Termini, Fiber Optic, Connector, Removable, Environment Resisting, Pin Terminus, Front Release, Ceramic Ferrule, (for MIL-PRF-28876 Connectors).
MIL-PRF-29504/15-	Termini, Fiber Optic, Connector, Removable, Environment Resisting, Socket Terminus, Front Release, Ceramic Ferrule, (for MIL-PRF-28876 Connectors).
MIL-PRF-29504/18-	Termini, Fiber Optic, Connector, Removable, Environment Resisting, Genderless Terminus, Rear Release, Ceramic Ferrule, 1.25 MM Ferrule, (for MIL-PRF-64266 Connectors).
MIL-PRF-29504/20-	Test terminus, Fiber Optic, Keyed, Connector, Removable, Environment Resisting, Genderless Terminus, Rear Insert/Rear Release, 1.25 mm Ceramic Ferrule, (for MIL-PRF-64266 Connectors).

Source: https://assist.dla.mil -- Downloaded: 2016-12-31T21:10Z
Check the source to verify that this is the current version before use.

MIL-PRF-29504/21-	Test Terminus, Fiber Optic, Keyed, Removable, Use in Optical Loss and Optical Continuity Testing, Rear Insert/Rear Release Through a Test Terminus Adapter, 1.25 mm Ceramic Ferrule, 1.25 mm Ferrule, (for MIL-PRF-64266 Connectors).
MIL-DTL-38999-	Connectors, Electrical, Circular, Miniature, High Density, Quick Disconnect, (Bayonet Threaded and Breech Coupling), General Specification for.
MIL-PRF-64266-	Connectors, Fiber Optic, Circular and Rectangular, Plug and Receptacle Style, Multiple Removable Genderless Termini, Environment Resisting General Specification for
MIL-DTL-83522-	Connectors, Fiber Optic, Single Terminus, General Specification for.

(Copies of these documents are available online at http://quicksearch.dla.mil or from the Standardization Document Order Desk, 700 Robbins Avenue, Building 4D, Philadelphia, PA 19111-5094.)

2.3 Other Government documents, drawings, and publications. The following other Government documents, drawings, and publications form a part of this standard practice to the extent specified herein. Unless otherwise specified, the issues are these documents are those cited in the solicitation or contract.

NAVAIR 01-1A-505-4/ T.O. 1-1A-14-4/TM1-1500-232-24-4 - Installation and Testing Practices, Aircraft Fiber Optic Cabling

(A copy of this document is available online at: https://mynatec.navair.navy.mil. NATEC has three difference processes to obtain the manual, depending on if you are Government personnel (military and civilians), Contractors with a Government contract, or everyone else. If unable to access this Web Site or require further assistance, contact (1) NATEC Customer Service: 619.545.1888, (2) NATEC Website Status Hotline: 619.545.1706, or (3) NATEC Customer Service E-mail: nani_customerservice@navy.mil.)

2.4 Order of precedence. Unless otherwise noted herein or in the contract, in the event of a conflict between the text of this document and the references cited herein, the text of this document takes precedence. Nothing in this document, however, supersedes applicable laws and regulations unless a specific exemption has been obtained.

3. Definitions.

3.1 Connector, fiber optic. A device that permits repeated mating and couples the optical power between two optical fibers or two groups of optical fibers. A fiber optic connector must maintain fiber alignment without significant loss of optical power.

3.2 Connector, LC. The Lampert connector or Lucent connector (LC) is a single ferrule connector with a 1.25 mm (.05 inch) ferrule diameter, a push-pull style attachment configuration to the mating an LC-to-LC adapter/patch panel or equipment interface port, and a butt-jointed connector design. The LC connector has a small form factor configuration that has the same footprint as a RJ-45 receptacle.

3.3 Ferrule length gauge. An instrument used to measure the protruding ferrule length from the barrel (body) of the fiber optic terminus or single ferrule connector to the ferrule end face.

3.4 Polish, non-contact (NC). Ferrule end face is polished in a manner so that the fibers are the first to make contact when connection surfaces are mated together.

3.5 Polish, physical contact (PC). Ferrule end face is polished in a manner so that the fibers are the first to make contact when connection surfaces are mated together.

3.6 Termini. A component used in a fiber optic, multiple termini, connection that is inserted into one of the insert cavity of a multiple termini connector and terminated onto the end of a simplex, fiber optic cable. Termini is the plural form for the word terminus.

REQUIREMENT 6305

Source: https://assist.dla.mil -- Downloaded: 2016-12-31T21:10Z
Check the source to verify that this is the current version before use.

3.7 Terminus. Singular form for the word termini.

3.8 Terminus, pin. The male configuration of a terminus that consists of a metal barrel (body) and a metal or ceramic ferrule.

3.9 Terminus, socket. The female configuration of a terminus that consists of a metal barrel (body), a metal or ceramic ferrule and an alignment sleeve. The alignment sleeve attaches to the socket terminus ferrule. Fiber alignment occurs when the pin terminus slides into the alignment sleeve of the socket terminus.

3.10 Test probe. A single fiber MQJ that is configured with a connector at one end to mate with the test equipment and a connector referred to as "test probe" at the other end. The test probe is test connector that is used to test one terminus at a time within a MIL-DTL-38999 connector. This test probe is inserted into the cavity of a test probe adapter. The test probe adapter is mated to the MIL-DTL-38999 connector.

3.11 Test terminus. A single fiber MQJ that is configured with a connector at one end to mate with the test equipment and a connector referred to as "test terminus" at the other end. The test terminus is test connector that is used to test one terminus at a time within a MIL-PRF-64266 connector. This test terminus is inserted into the cavity of a test terminus adapter. The test terminus adapter is mated to the MIL-PRF-64266 connector.

4. Requirements. The dimensions and interface features of the fiber optic ferrule length gauge shall be standardized for commonality compliance across platforms to ensure the ability to measure the specified ferrule protrusion length from the barrel (body) of the terminus or single ferrule connector to the ferrule end face. Commonality compliance is that in which bounds or restricts the parts to those recognized by the Joint Fiber Optic Working Group (JFOWG) and, as a result, cited in this Standard Practice. Requirements for the ferrule length gauge shall comply with 4.1 through 4.6.

4.1 Configuration. Ferrule length gauge shall include a measurement device (such as a digital gauge), plungers for various connector/termini types and fixtures to interface measurement device with the various connector/termini types. One configuration is shown in figure 6305 – 1 to illustrate a ferrule length gauge consisting of a measurement device, plunger and fixture.

4.2 Measurement parameters. Ferrule length gauge shall meet the minimum specified requirements for the measurement parameters listed in 4.2.1 through 4.2.4.

4.2.1 Digital indication. Digital display with resolution to four decimal places (minimum).

4.2.2 Accuracy of digital indication: +/- 0.0001 inches minimum.

4.2.3 Repeatability of digital indication: +/- 0.0001 inches minimum.

4.2.4 Measurement range. Anticipated maximum of removed ferrule material does not exceed 0.1 inches.

4.3 Insert for different connector/termini types. . At a minimum, the inserts shall be included for the following connector/termini types: M29504/4, M29504/5, M29504/4 & MIL-PRF-29504/5 test probe, M29504/14, M29504/15, M29504/18 & MIL-PRF-29504/20, M29504/18 & MIL-PRF-29504/20 test terminus, ST, SC, LC.

4.3.1 Interface documents. For fiber optic termini, the applicable specification sheets include MIL-PRF-29504/4, MIL-PRF-29504/5, MIL-PRF-29504/14, MIL-PRF-29504/15, MIL-PRF-29504/18, MIL-PRF-29504/20 and MIL-PRF-29504/21. For single ferrule connectors, the applicable military specification is MIL-DTL-83522. Otherwise, interface document used for a single ferrule connector shall conform to the applicable TIA-604 fiber optic connector intermateability standard.

REQUIREMENT 6305

Source: https://assist.dla.mil -- Downloaded: 2016-12-31T21:10Z
Check the source to verify that this is the current version before use.

4.4 Physical requirements. Ferrule length gauge shall meet the physical requirements of 4.4.1 through 4.4.4.

4.4.1 Envelope dimension. The ferrule length gauge with maximum envelop dimensions of 6 inch by 4 inch by 2 inch shall accommodate, with an added plunger tip, a single ferrule connector or terminus

4.4.2 Grip. The ferrule length gauge shall be configured to grasp both the single ferrule connector/terminus barrel (body) and the fixture that holds the single ferrule connector/terminus.

4.4.3 Applied weight. The weight on the ferrule end face being measured from the ferrule length gauge plunger (insert) shall not exceed 5 lb.

4.4.4 Plunger tip configuration. Plunger tips that make contact with the ferrule end face shall conform to the plunger and alignment sleeve dimensions in figure 6301-I of Requirement 6301.

4.5 Material requirements. Ferrule length gauge shall meet the durability and corrosion requirements of 4.5.1 through 4.5.3.

4.5.1 Durability. Material used for the ferrule length gauge inserts shall be metal that is sufficiently durable to survive 1000 ferrule insertions and removals without showing any signs of wear and degradation in function (such as metal particles or shavings).

4.5.2 Corrosion. Material used for the ferrule length gauge shall be corrosion resistant. If provided with a stainless steel tool tip (inserts), 303 stainless steel is acceptable.

REQUIREMENT 6305

Source: https://assist.dla.mil -- Downloaded: 2016-12-31T21:10Z
Check the source to verify that this is the current version before use.

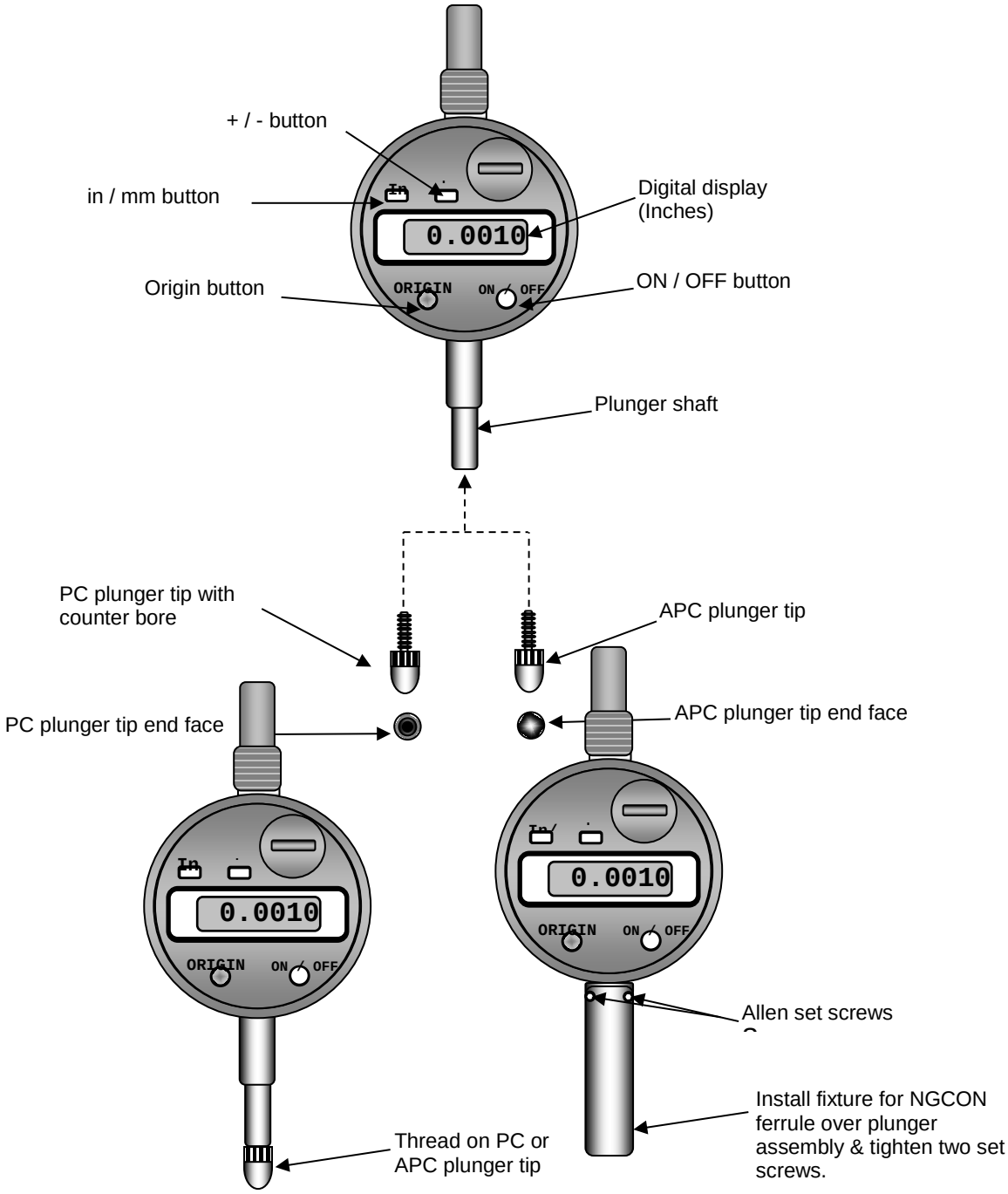

FIGURE 6305 – 1. Ferrule length gauge dimensions and interface features.

4.6 Calibration considerations. Ferrule length gauge shall include a measurement device such as a micrometer, vernier caliper, or height gage. Ferrule length gauge shall meet the calibration considerations listed in 4.6.1 and 4.6.2. Ferrule length gauge shall include a means to reset to zero.

Source: https://assist.dla.mil -- Downloaded: 2016-12-31T21:10Z
Check the source to verify that this is the current version before use.

4.6.1 Removal for calibration. Measurement device shall be removable form the ferrule length gauge fixture for calibration.

4.6.2 Measurement device interval. Calibration interval for the measurement device shall not be less than one year.

5. Implementation. Unless otherwise specified by the applicable Platform Office, ferrule length gauge shall incorporate the interface dimensions in figure 6305 – 1 and the interface requirements of 4.1 through 4.6. Verification of these requirements shall comply with 5.1 through 5.4.

5.1 Responsibility. Unless otherwise specified by the procuring activity, the supplier is responsible for the performance of all items contained herein with regard to the above requirements.

5.2 Performance verification. Dimensional data for polishing puck may be provided to demonstrate performance; however, the Procuring Activity reserves the right to perform any of the inspections specified to verify suitable end face geometry is being obtained. Unless otherwise specified, test samples shall be submitted to the designated Design Activity for approval.

5.3 Performance demonstration for correct protrusion length measurement. When specified, test data submitted shall include verification for demonstration of successful single ferrule connector or terminus ferrule length protruding from the barrel to the ferrule end face.

5.4 Restrictions. When specified or for shipboard applications test data shall include the ferrule length obtained.

6. Notes.

6.1 Intended use. On these platforms, the ferrule length gauge is intended to measurement the protruding ferrule length from a terminus used in a MIL-PRF-28876/MIL-DTL-38999/MIL-PRF-64266 multiple termini connector or a single ferrule connector that is a part of (1) cable harnesses, and (2) equipment (electronic module/package) such as a ATR, LRC, LRM, LRU or WRA with internal fiber optics.

6.2 Tool use. The ferrule length gage is to measure the ferrule protrusion length. The ferrule protrusion length is the linear distance from the front of the barrel (body portion of the connector/terminus that holds the ferrule) to the ferrule tip. For a PC polished ferrule, the ferrule tip is defined as the highest point on the domed end face of the ferrule in which contact is made with the ferrule length gauge plunger. For an APC polished ferrule, the ferrule tip is defined as the highest point of the angle on the end face of the ferrule. The ferrule length gauge plunger can be flat to make contact with the highest point on an APC polished ferrule.

REQUIREMENT 6305

Source: https://assist.dla.mil -- Downloaded: 2016-12-31T21:10Z
Check the source to verify that this is the current version before use.

PERFORMANCE REQUIREMENTS FOR PARTS AND SUPPORT EQUIPMENT

(6401-6404)

Source: https://assist.dla.mil -- Downloaded: 2016-12-31T21:10Z
Check the source to verify that this is the current version before use.

REQUIREMENT 6401

SINGLE MODE OPTICAL LOSS TEST SET (OLTS) PERFORMANCE REQUIREMENTS

1. Purpose. The performance requirements for a fiber optic test set that measures the optical loss and the return loss on single mode fiber are specified herein. This type of fiber optic test set is referred to as an Optical Loss Test Set (OLTS). The intent of Requirement 6401 is to provide performance requirements, performance verification table and other needed clarification to determine compliance of a single mode OLTS to the specified performance requirements. This requirement is intended to support OLTS used for developmental, prototype, production, rework and modification programs on military platform fiber optic cable assemblies. Requirement 6401 is intended for Navy shipboard applications and those other applications in which the specified performance requirements can apply. Multiple OLTS configurations are specified. Two configurations are intended for Fleet (military) use and two for those determining conformance to MIL-STD-2042, but not used by Fleet personnel. Within each configuration, there are two types of interfaces (connection adapters). One type has the interfaces with PC polished connectors. The other type has the interfaces with APC polished connectors. For simplification, four configurations are defined rather than two configurations and two types within each configuration.

1.1 Supplemental, item number. Item number 6203LA is assigned to the single mode OLTS that is found in Requirement 6203 for Fleet use, interface with PC polished connectors. Item number 6203LC is assigned to the single mode OLTS that is found in Requirement 6203 for Fleet use, interface with APC polished connectors.

1.2 Configurations. Two configurations are specified for the single mode, optical loss test set that interfaces with PC polished connectors (see 4.10) and two for interfaces with APC polished connectors. These four configurations are listed in table 6401-I.

1.2.1 MIL-STD-2042 compliance. Two configurations, configurations A and C, are intended for determining conformance to MIL-STD-2042. These configurations include use by civilian personnel both in the Government and for contractors providing optical loss and return loss testing services to the Government. These performance requirements are a limited subset of those for configuration B and are listed in Requirement 6401. One configuration, configuration A, has connection adapters that interface with PC polished connectors. The other configuration, configuration C, has connection adapters that interface with APC polished connectors.

1.2.2 Fleet (military) use. Two configurations, configurations B and D, are intended for Fleet (military) use. These configurations include use by military personnel in Navy shipboard, submarine, and shore applications. These performance requirements were covered previously under a Subcategory (SCAT) code and are now updated and listed in Requirement 6401. These performance requirements are a larger set than those for configurations A and C. The increased requirements include those for environmental stresses/conditions (per MIL-STD-28800), data management and software. These performance requirements are listed in appendix A of Requirement 6401. One configuration, configuration B, has connection adapters that interface with PC polished connectors. The other configuration, configuration D, has connection adapters that interface with APC polished connectors.

TABLE 6401-I. Single mode optical loss test set (OLTS) configurations.

Configuration	Intended Use	Description 1/, 2/	Output Interface Port
A	MIL-STD-2042 compliance 3/	OLTS, SM, SP1678 R6401, configuration A	PC
B	Fleet 3/, 5/	OLTS, SM, SP1678 R6401, configuration B	PC
C	MIL-STD-2042 compliance 4/	OLTS, SM, SP1678 R6401, configuration C	APC
D	Fleet 4/, 6/	OLTS, SM, SP1678 R6401, configuration D	APC

1/ OLTS = Optical Loss Test Set, SM = Single Mode
2/ SP1678 = Standard Practice MIL-STD-1678, R6401 = Requirement 6401
3/ Used for verification of connectors or links that do not have a link return loss requirement > 45 dB
4/ Used for verification of connectors or links that have a link return loss requirement > 45 dB
5/ Item 6203LA in Requirement 6203 table 6203-VII.
6/ Item 6203LC in Requirement 6203 table 6203-VII.

Source: https://assist.dla.mil -- Downloaded: 2016-12-31T21:10Z
Check the source to verify that this is the current version before use.

2. Applicable documents.

2.1 General. The documents listed in this section are specified in sections 3, 4, and 5 of this standard practice. This section does not include documents cited in other sections of this standard practice or recommended for additional information or as examples. While every effort has been made to ensure the completeness of this list, document users are cautioned that they must meet all specified requirements of documents cited in sections 3, 4, and 5 of this standard practice, whether or not they are listed.

2.2 Government documents.

2.2.1 Specifications, standards, and handbooks. The following specifications, standards, and handbooks form a part of this document to the extent specified herein. Unless otherwise specified, the issues of these documents are those cited in the solicitation or contract.

DEPARTMENT OF DEFENSE STANDARDS

MIL-STD-2042- Fiber Optic Cable Topology Installation, Standard Methods for Naval Ships, Parts 1 to 6.

MIL-PRF-28800 – Test Equipment for Use With Electrical and Electronic Equipment, General Specification for

(Copies of these documents are available online at http://quicksearch.dla.mil or from the Standardization Document Order Desk, 700 Robbins Avenue, Building 4D, Philadelphia, PA 19111-5094.)

2.2.2 Other Government documents, drawings, and publications. The following other Government documents, drawings, and publications form a part of this standard practice to the extent specified herein. Unless otherwise specified, the issues are these documents are those cited in the solicitation or contract.

NSWC DD ltr. – Approved Equipment List

(A copy of this list can be obtained at NSWC DD Web Site in the NSWC DD Approved equipment list section. This NSWC Dahlgren fiber optic web site houses additional shipboard fiber optic information and policy letters that may be applicable to the requirements in this standard. Due to the dynamic nature of web addresses the current website URL can be obtained by e-mailing DLGR_NSWC_FOWEB@navy.mil with the subject line “WEBSITE URL REQUEST”. An automated reply will contain the current web address.)

2.3 Non-Government documents. The following documents form a part of this document to the extent specified herein. Unless otherwise specified, the issues of these documents are cited in the solicitation or contract.

AMERICAN NATIONAL STANDARDS INSTITUTE

ANSI Z136.2 – Safe Use of Optical Fiber Communication Systems Utilizing Laser Diode and LED Sources.

(A copy of this document is available on-line at www.ansi.org or from the ANSI Customer Service Department, 25 W. 43rd Street, 4th Floor, New York, NY 10036.)

TELECOMMUNICATIONS INDUSTRY ASSOCIATION

TIA-455-22 Ambient Light Susceptibility.

(Copies of this document are available from http://www.tiaonline.org or from Telecommunications Industry Association, Standards and Technology Department, 2500 Wilson Boulevard Arlington, VA 22201.)

2.4 Order of precedence. Unless otherwise noted herein or in the contract, in the event of a conflict between the text of this document and the references cited herein, the text of this document takes precedence. Nothing in this document, however, supersedes applicable laws and regulations unless a specific exemption has been obtained.

3. Definitions.

REQUIREMENT 6401

Source: https://assist.dla.mil -- Downloaded: 2016-12-31T21:10Z
Check the source to verify that this is the current version before use.

3.1 Mandrel wrapping. The appropriate single fiber cable is wrapped around the mandrel until a specified stable value is indicated on the OLTS display. Ten mandrel wraps are usually sufficient to obtain a stable value. This is a way to terminate the fiber to eliminate any back reflected light at the point of the mandrel wrap and beyond.

3.2 Measurement Quality Jumper (MQJ). The Measurement Quality Jumper (MQJ) is a low loss jumper that is used with test equipment to perform optical loss measurements. The MQJ must meet stringent optical loss requirements to ensure accuracy of measurements performed. Measurements must be accurate and repeatable. The accuracy and repeatability of your measurement is only as good as your MQJ. As the MQJ degrades with use, so does the measurement accuracy. The MQJ consists of a single fiber cable with a connector at one end which mates to the test equipment (optical source and power meter) and a connector at the other end which mates to the link/segment under test.

3.3 Optical fiber. An optical fiber is a thin cylindrical dielectric (non-conductive) waveguide used to send light energy for communication. Optical fibers consist of three parts: the core, the cladding, and the coating or buffer. The choice of optical fiber materials and fiber design depends on operating conditions and intended application.

3.4 Optical fiber, multimode. A multimode optical fiber is one that supports the propagation of more than one bound mode (electromagnetic wave).

3.5 Optical fiber, single mode. A small core optical fiber where one bounded electromagnetic wave of light will propagate at the wavelength of interest.

3.6 Optical loss. A measurement performed of the optical power level in which the set setup uses an optical source, power meter and measurement quality jumpers (MQJ).

3.7 Optical loss test set (OLTS). A fiber optic power level measurement device that contains both an optical source and a power meter within it case (enclosure). Most OLTS also contain the digital logic to perform calculations, have a user graphic display, and store then export data. Single mode OLTS also contain the fiber optic circuit paths to permit the measurement for optical return loss.

3.8 Optical source (fiber optic light source). A device that emits radiation in or near the visible region of the electromagnetic spectrum, for example, light-emitting diodes (LED), laser diodes (LD), and lamps (broad spectrum), for providing optical power to optical measurement system/instrumentation.

3.9 Optical return loss. This is the ratio of the reflected power, P_r, to the incident power, P_i, in the unit of measure of dB in a fiber optic system or link. The return loss is measured as a positive value. Although the ratio of reflected power to incident power is a fraction less than one, the minus sign in front of the equation for optical return loss makes the value calculated a positive quantity. The optical return loss is measured when two or more optical interfaces are in the fiber optic system or link.

3.10 Power meter (fiber optic detector or photo-detector). An optoelectronic device that accepts optical signals from an optical source through the propagation medium (including fiber optic cabling and the DUT or Device Under Test), detects them by converting them into electronic signals (through a light-sensitive element, such as a photodiode), amplifies, and further processes the electrical signal into units of measure of optical power in Watts (i.e., nano-Watts or micro-Watts) or power ratio in dB or dBm.

3.11 Reflectance. This is the ratio of the reflected power, P_r, to the incident power, P_i, in the unit of measure of dB at a single fiber optic interface or at one reflection point. The reflectance is measured as a negative value since the log of the ratio of reflected power to incident power is a fraction less than one (a negative value).

3.12 Support equipment. Equipment that is required to maintain, test, or operate an item, or facility, in its intended environment. An OLTS is one piece of support equipment.

REQUIREMENT 6401

Source: https://assist.dla.mil -- Downloaded: 2016-12-31T21:10Z
Check the source to verify that this is the current version before use.

3.13 Termination, connector. The process performed for placing a connector, terminus, splice or other device at the end of an optical fiber. This placement optically minimizes leakage/losses and reflection. Terminations are used to join or connect two adjacent optical fiber ends or to terminate the fiber at either a source (electrical to optical conversion) or receiver (optical to electrical conversion) where the light leaves the optical fiber (waveguide) and continues in a non-waveguide mode of propagation.

3.14 Termination, mandrel wrapping. See 3.1.

4. Requirements. The OLTS shall be capable of performing optical power loss and backscattered light (return loss) measurements on single mode fiber optic paths. In optical loss measurement two identical units shall be interoperable (capable of performing measurements in a cooperative fashion). In optical return loss measurement a single unit shall be capable of performing a measurement within accuracies specified herein. Commonality compliance is that in which bounds or restricts the OLTS to those recognized by the Joint Fiber Optic Working Group (JFOWG) and, as a result, cited in this Standard Practice. Requirements for the OLTS with a configuration of A or C shall comply with 4.1 through 4.6, depending upon configuration being offered (see 4.7). The requirements and methods to verify these requirements shall conform to table 6401–II for configurations A and C. A more extensive set of requirements (including conformance to the environmental conditions in MIL-PRF-28800) that are applicable to configurations B and D and are listed in appendix A, does not apply. For configurations A and C, the OLTS shall meet the requirements listed in table 6401–II.

4.1 Optical (light) source: Each optical source in the OLTS shall be restricted to containing a Class 1 Laser (per ANSI Z136.2).

4.1.1 Wavelength: The OLTS shall contain at least two optical sources with a minimum at the wavelengths of 1310 nm ±25 nm and 1550 nm ± 25 nm @ 25 ± 1°C

4.1.2 Linewidth: < 5 nm (3 dB down from peak)

4.1.3 Output power: > -10 dBm CW into 9 m fiber

4.1.3.1 Time stability: ≤ ± 0.1 dB / 4 hours and ≤ 0.1 dB peak/15 minutes; at constant temperature of 25 ± 1°C

4.1.3.2 Temperature stability:
≤ ± 0.25 dB for temperature variations of ±10°C in the range of 17°C to 40°C
≤ ± 0.75 dB for temperature variations of ± 25°C in the range of 0°C to 50°C

4.1.3.3 Mechanical stability of connection port: Maximum variation of optical levels between repeated matings at the output port of the same unit shall be ≤ 0.2 dB

4.1.4 Output connector. See 4.6.3.1.

4.1.5 Mandrel. The OLTS shall be provided with one standard 0.25 inch diameter mandrel for single mode termination (see 3.14).

4.2 Power meter (optical detector).

4.2.1 Wavelength. Operational range at least 800 nm to 1650 nm (calibration at cardinal points is acceptable)

4.2.2 Measurement range: -55 dBm to +10 dBm

4.2.3 Accuracy: ≤ ±6%; at –10dBm @ 1310 nm

4.2.4 Linearity:
≤ ± 0.22 dB over the range of optical power -40 dBm to +10 dBm
≤ ± 0.50 dB over the range of optical power -55 dBm to –40 dBm

REQUIREMENT 6401

Source: https://assist.dla.mil -- Downloaded: 2016-12-31T21:10Z
Check the source to verify that this is the current version before use.

4.2.5 Display. The measurement values with units of measure, setup parameters and other OLTS operations shall be observed by means of a digital display.

4.2.5.1 Parameters. (a) Power level in dBm; (b) Loss in dB; (c) Wavelength in nm; (d) Low battery indicator

4.2.5.2 Resolution. At least 4 digits for power XX.XX dB (two digits to the right of a decimal point) and one digit to indicate if it is a positive or negative value.

4.2.6 Input connector. See 4.6.3.1.

4.2.7 Mechanical stability of connector. Maximum variation of optical levels between repeated mating at the input port of the same unit shall be ≤ 0.02 dB.

4.3 Optical loss measurements. The OLTS shall provide the following measurements as a minimum.

4.3.1 Dual wavelength test. The OLTS shall be capable of performing loss tests in both 1310 nm and 1550 nm wave lengths without relocating the fiber connections.

4.3.2 Manual mode tests. In manual mode the OLTS shall be capable of operating as optical source and optical power meter.

4.3.3 Referencing. The OLTS shall be capable of making power reference to itself or to a second unit using a reference cable.

4.4 Return loss measurement.

4.4.1 Operating wavelengths. 1310 nm and 1550 nm

4.4.2 Range. Outside the specified ranges the OLTS shall either display “HI”, “LOW”, or the actual value.

4.4.2.1 Interface connection with ORL > 50 dB. 10 to 45 Db minimum (for a UPC connection).

4.4.2.2 Interface connection with ORL > 65 dB. 10 to 60 Db minimum (for an APC connection).

4.4.3 Accuracy.

4.4.3.1 Detector accuracy. < ± 1.0 dB

4.3.3.2 Open air verification measurement. Between 14.3 dB and 15.9 dB

4.4.4 Reference (MQJ). The equipment shall be capable of establishing reference with an interface cable having an interface connection ORL from 30 dB to > 43 dB for a UPC connection and from 30 to > 63 dB for a APC connection (using a standard mandrel 10 turn light termination on the interface cable)

4.5 Ambient light susceptibility. Ambient light susceptibility shall be < -60 dBm according to test procedure specified in standard TIA-455-22.

4.6 General requirements.

4.6.1 Power.

4.6.1.1 Warm up time. The equipment warm up time shall not exceed 20 minutes.

REQUIREMENT 6401

Source: https://assist.dla.mil -- Downloaded: 2016-12-31T21:10Z
Check the source to verify that this is the current version before use.

4.6.1.2 Internal DC battery. OLTS shall be capable of operating on either internal rechargeable or non-rechargeable batteries. Rechargeable batteries shall be provided for portable operation. For rechargeable batteries minimum operating time shall be at least 8 hours following a maximum recharge time of 14 hours. Non-rechargeable batteries shall be available from commercial market and the minimum operating time shall be at least 8 hours.

4.6.1.3 AC operation. External adapter provides DC to input jack. External adapter shall accept electrical power of 110/220 ±10% @ 60 Hz single phase.

4.6.1.4 Auto power off. The OLTS shall have an automatic turn off feature. The feature shall be activated when the absence of keyboard activity exceeds a set interval (5 to 15 minutes).

4.6.2 Physical features.

4.6.2.1 Dimensions. Less than 23 cm (9 in) height; 11 cm (4.3 in) width; 6 cm (2.4 in) depth for each test set.

4.6.2.2 Weight. 1 kg (2.2 lb) max for each test set (including source, sensor, and batteries)

4.6.3 Accessories.

4.6.3.1 Removable universal connector adapters are required to support interconnection on the optical (light) source and on the power meter (optical detector). The optical source shall support interconnection with UPC ST connector, or if APC, both the APC SC and APC FC connectors. The power meter shall support interconnection with UPC ST, UPC SC and UPC LC connectors or if APC, the APC SC, APC LC and APC FC connectors.

4.6.3.2 Protective caps and dust covers. Protective caps/dust covers for optical ports shall be provided.

4.6.3.3 Transit case. A protective hard carrying case according to MIL-PRF-28800F shall be provided for transporting the OLTS. The transit case shall be capable to accommodate the OLTS, accessories, and at least the Operator's Manual.

4.6.3.4 Technical manual. Technical manuals shall be provided. At a minimum, these technical manuals shall consist of a Use manual and Installation manual (Operator's Manual).

4.6.3.5 Identification plate. The OLTS identification plate shall be permanently affixed to the OLTS. The identification plate shall contain the following information:

Manufacturer name and/or cage:
Part or model number:
Serial number:

4.7 Configurations. The OLTS specified in Requirement 6401 shall be configured for either Fleet use or for MIL-STD-2042 conformance.

4.7.1 MIL-STD-2042 conformance. The OLTS that is configured for MIL-STD-2042 conformance shall meet the more limited requirements in table 6401–II. These OLTS configurations shall be referred to as "configurations A and C".

4.7.2 Fleet use. The OLTS that is configured for Fleet use shall comply with the requirements specified in this requirement and appendix A and in table 6401 A-I. These OLTS configuration shall be referred to as "configurations B and D".

5. Performance. The OLTS shall be used by civilian personnel to measure both optical loss and return loss in single mode, fiber optic cabling systems for determining conformance to MIL-STD-2042. The requirements and means to show compliance (means of verification) with these requirements shall conform to table 6401–II.

5.1 Compliance verified. Once compliance of the OLTS to the performance requirements for configuration A or C is verified, the OLTS shall be listed on the NSWC DD Approved Equipment List.

5.2 Compliance test facility. Application for OLTS verification compliance to configuration A or C shall be submitted to NSWC DD by e-mail to NSWC DD Warfare Systems Department at DLGR_NSWC_FO_ENG@navy.mil. NSWC DD shall be the Government entity responsible for performing the testing to determine compliance to the performance requirements.

REQUIREMENT 6401

Source: https://assist.dla.mil -- Downloaded: 2016-12-31T21:10Z
Check the source to verify that this is the current version before use.

TABLE 6401–II. OLTS list of requirements and verification methods, for civilian use (configurations A & C).

Parameter	Requirement	Means of verification
Optical (light) source	4.1	Compliance test 1/
Wavelength	4.1.1	Compliance test 1/
Line width	4.1.2	Compliance test
Output power	4.1.3	Compliance test
Time stability	4.1.3.1	Compliance test
Temperature stability	4.1.3.2	Compliance test
Mechanical stability of connector	4.1.3.3	Compliance test
Output connector	4.1.4	Visual/Mechanical Inspection
Mandrel	4.1.5	Visual/Mechanical Inspection
Power meter (optical detector)	4.2	
Wavelength	4.2.1	Compliance test 1/
Measurement range	4.2.2	
Accuracy	4.2.3	Compliance test 1/
Linearity	4.2.4	Compliance test 1/
Display: digital	4.2.5	Visual/Mechanical Inspection
Parameters	4.2.5.1	Visual/Mechanical Inspection
Resolution	4.2.5.2	Visual/Mechanical Inspection
Input connector	4.2.6	Visual/Mechanical Inspection
Mechanical stability of connector	4.2.7	Visual/Mechanical Inspection
Optical loss measurement	4.3	
Dual wavelength test	4.3.1	Visual/Mechanical Inspection
Manual mode test	4.3.2	Visual/Mechanical Inspection
Referencing	4.3.3	Visual/Mechanical Inspection
Return loss measurement	4.4	
Operating wavelength	4.4.1	Compliance test 1/
Range	4.4.2	Compliance test
Range: Interface connection with ORL >50dB (UPC)	4.4.2.1	Compliance test
Range: Interface connection with ORL >65dB (APC)	4.4.2.2	Compliance test
Accuracy	4.4.3	Compliance test
Reference	4.4.4	Compliance test
Ambient light susceptibility	4.5	Compliance test 1/
Non-measurement parameters		
General requirements	4.6	
Power	4.6.1	Visual/Mechanical Inspection
Warm up time	4.6.1.1	Visual/Mechanical Inspection
Internal DC battery	4.6.1.2	Visual/Mechanical Inspection
AC operation	4.6.1.3	Visual/Mechanical Inspection 2/
Auto power off	4.6.1.4	Visual/Mechanical Inspection
Lithium batteries	Not applicable	Not applicable
Physical features	4.6.2	
Dimensions	4.6.2.1	Visual/Mechanical Inspection
Weight	4.6.2.2	Visual/Mechanical Inspection
Accessories	4.6.3	
Connector adapters, removable	4.6.3.1	Visual/Mechanical Inspection
Protective caps	4.6.3.2	Visual/Mechanical Inspection
Transit case	4.6.3.3	Visual/Mechanical Inspection
Technical manual	4.6.3.4	Visual/Mechanical Inspection
Training material	Not applicable	Not applicable
Identification plate	4.6.3.5	Visual/Mechanical Inspection

1/ Manufacturer verification/calibration data may be submitted for compliance consideration.
2/ Manufacturer Compliance Statement in addition to Visual/Mechanical Inspection.

REQUIREMENT 6401

Source: https://assist.dla.mil -- Downloaded: 2016-12-31T21:10Z
Check the source to verify that this is the current version before use.

6. Notes.

6.1 Intended use. On these platforms, the OLTS is intended to measure the optical path from a terminus used in a MIL-PRF-28876/MIL-DTL-38999/MIL-PRF-64266 multiple termini connector or a single ferrule connector that is a part of (1) cable harnesses, and (2) equipment (electronic module/package) such as an ATR, LRC, LRM, LRU or WRA with internal fiber optics.

6.2 Requirement point of contact. Inquiries concerning the requirements listed for fiber optic test equipment for Navy shipboard applications should be addressed to DLGR_NSWC_FO_ENG@navy.mil.

REQUIREMENT 6401

Source: https://assist.dla.mil -- Downloaded: 2016-12-31T21:10Z
Check the source to verify that this is the current version before use.

APPENDIX A

OLTS CONFIGURATION FOR MILITARY APPLICATIONS

A.1 Intent. The OLTS configurations specified in this appendix are ones that has a more extensive set of requirements (such as environmental conditions) than the OLTS configurations specified in Requirement 6401. These configurations, referred to as configurations B and D, are intended for Fleet (military) use. These two configurations are for use by military personnel in Navy shipboard, submarine, and shore applications. The other two configurations, configurations A and C, are not covered by this appendix and are for use by civilian personnel both in the Government and for contractors providing optical loss and return loss testing services to the Government.

A.2. Applicable documents.

A.2.1 General. The documents listed in this section are specified in sections A.3, A.4, and A.5 of this standard practice. This section does not include documents cited in other sections of this standard practice or recommended for additional information or as examples. While every effort has been made to ensure the completeness of this list, document users are cautioned that they must meet all specified requirements of documents cited in sections A.3, A.4, and A.5 of this standard practice, whether or not they are listed.

A.2.2 Government documents.

A.2.2.1 Specifications, standards, and handbooks. The following specifications, standards, and handbooks form a part of this document to the extent specified herein. Unless otherwise specified, the issues of these documents are those cited in the solicitation or contract.

DEPARTMENT OF DEFENSE STANDARDS

MIL-STD-1678-6- Fiber Optic Cabling Systems Requirements and Measurements (Part 6: Parts and Support Equipment Commonality and Standardization Requirements, Cable Harness Configurations) (Part 6 of 6 Parts)

MIL-PRF-28800 - Test equipment for use with electrical and electronic equipment, general specification for

(Copies of these documents are available online at http://quicksearch.dla.mil or from the Standardization Document Order Desk, 700 Robbins Avenue, Building 4D, Philadelphia, PA 19111-5094.)

A.2.2.2 Other Government documents, drawings, and publications. The following other Government documents, drawings, and publications form a part of this standard practice to the extent specified herein. Unless otherwise specified, the issues are these documents are those cited in the solicitation or contract.

SCAT 4954/SCAT 4952, NRL 5524 of 13 March 2002

(A copy of this document is available by requesting an application through e-mail to NSWC DD Warfare Systems Department at: DLGR_NSWC_Foweb@navy.mil.).

A.2.3 Order of precedence. Unless otherwise noted herein or in the contract, in the event of a conflict between the text of this document and the references cited herein, the text of this document takes precedence. Nothing in this document, however, supersedes applicable laws and regulations unless a specific exemption has been obtained.

A.3. Definitions. Definitions for terms used in this appendix can be found in paragraph 3 of Requirement 6401.

REQUIREMENT 6401

Source: https://assist.dla.mil -- Downloaded: 2016-12-31T21:10Z
Check the source to verify that this is the current version before use.

A.4. Requirements. The OLTS shall be capable of performing optical power loss and backscattered light (return loss) measurements on single mode fiber optic paths. In optical loss measurement, two identical units shall be interoperable (capable of performing measurements in a cooperative fashion). In optical return loss measurements, a single unit shall be capable of performing a measurement within accuracies specified herein. Commonality compliance is that in which bounds or restricts the OLTS to those recognized by the Joint Fiber Optic Working Group (JFOWG) and, as a result, cited in this Standard Practice. Requirements for the OLTS shall comply with 4.1 through 4.6 and with this appendix A.4.1 and A.4.2. The requirements and methods to verify these requirements shall conform to table 6401 A-I for configurations B and D. Constraints on verification and for conformance to the environmental conditions in MIL-PRF-28800 are listed in A.5.1.

A.4.1 Power. In addition to those requirements specified in 4.6.1, the OLTS shall meet the requirements of A.4.1.1.

A.4.1.1 Lithium batteries. Per MIL-PRF-28800F, lithium batteries are prohibited without prior authorization. Requests for approving the use of lithium batteries, including those encapsulated in integrated circuits, shall be submitted to the procuring activity at the time of submission of proposals. Approval shall apply only to the specific model proposed. Proposed lithium cells/batteries shall be constrained to those requirements specified in MIL-STD-1678-6 Requirement 6404. Reporting and design requirements for lithium batteries shall conform to MIL-STD-1678-6 Requirement 6404.

A.4.2 Accessories. In addition to those requirements specified in 4.6.3, the OLTS shall meet the requirements of A.4.2.1 through A.4.2.3.

A.4.2.1 Technical manual. Technical manuals shall conform to MIL-PRF-28800F. A Use and Installation manual (Operator's Manual) shall be provided separately. Maintenance and Servicing manual shall be provided with all three levels of maintenance; unit operational verification, module level, and component level. The technical manual shall be provided in both printed and electronic formats. The printed format shall be otherwise normally provided. The electronic format shall consist of the installation programs for the latest version of Adobe Acrobat for all computer platforms for which Acrobat is available and the technical manual in an electronic form that is readable through use of the Adobe Acrobat application. A statement of copy right release for reproduction of technical manual for government use shall be printed in the first two pages of each technical manual. A statement of copy right release for reproduction of technical manual CD for government use shall be printed on each CD.

A.4.2.2 Training material. Training material that demonstrates the features, basic operations and procedures with step-by-step instructions for using the equipment as an OLTS/ORLM shall be provided. The material can be either on a CD with an interactive feature or in a technical manual format.

A.4.2.3 Identification plate. As per MIL-PRF-28800F, the OLTS identification plate shall be permanently affixed to two places on the OLTS and in front of the transit case. The identification plate shall contain the following information:
Manufacturer name and/or cage:
Part or model number:
Serial number:
National stock number:
Contract Number:
Military nomenclature or "Part of":

Source: https://assist.dla.mil -- Downloaded: 2016-12-31T21:10Z
Check the source to verify that this is the current version before use.

TABLE 6401 A-I. OLTS list of requirements and verification methods, for fleet use (Configurations B and D).

Parameter	Requirement
Optical (light) source	4.1
Wavelength	4.1.1
Line width	4.1.2
Output power	4.1.3
Time stability	4.1.3.1
Temperature stability	4.1.3.2
Mechanical stability of connector	4.1.3.3
Output connector	4.1.4
Mandrel	4.1.5
Power meter (optical detector)	4.2
Wavelength	4.2.1
Measurement range	4.2.2
Accuracy	4.2.3
Linearity	4.2.4
Display: digital	4.2.5
Parameters	4.2.5.1
Resolution	4.2.5.2
Input connector	4.2.6
Mechanical stability of connector	4.2.7
Optical loss measurement	4.3
Dual wavelength test	4.3.1
Manual mode test	4.3.2
Referencing	4.3.3
Return loss measurement	4.4
Operating wavelength	4.4.1
Range	4.4.2
Range: Interface connection with ORL >50dB	4.4.2.1
Range: Interface connection with ORL >65dB	4.4.2.2
Accuracy	4.4.3
Reference	4.4.4
Ambient light susceptibility	4.5
Non-measurement parameters	
General requirements	4.6
Power	4.6.1
Warm up time	4.6.1.1
Internal DC battery	4.6.1.2
AC operation	4.6.1.3
Auto power off	4.6.1.4
Lithium batteries	Appendix A - A.4.1.1
Physical features	4.6.2
Dimensions	4.6.2.1
Weight	4.6.2.2
Accessories	4.6.3
Connector adapters, removable	4.6.3.1
Protective caps	4.6.3.2
Transit case	4.6.3.3
Technical manual	Appendix A – A.4.2.1
Training material	Appendix A – A.4.2.2
Identification plate	Appendix A – A.4.2.3

See notes at end of table.

REQUIREMENT 6401

Source: https://assist.dla.mil -- Downloaded: 2016-12-31T21:10Z
Check the source to verify that this is the current version before use.

TABLE 6401 A-I. OLTS list of requirements and verification methods, for fleet use (Configurations B and D)-Continued.

MIL-PRF-28800 table 2 environmental conditions	Appendix A - A.5.1
Temperature, not operating	Class 3
Temperature, operating	Class 3
Relative humidity	Class 3
Altitude, not operating	Class 3
Altitude, operating	Class 3
Vibration limits	Class 3
Bounce, loose cargo	Not Applicable
Shock, functional	Class 3
Transit drop	Class 3
Bench handling	Class 3
Shock, high impact	Not Applicable
Watertight	Not Applicable
Splash proof	Not Applicable
Drip proof	Not Applicable
Fungus resistance	Class 3
Salt exposure, enclosure	Class 3
Salt exposure, structural parts	Class 3
Explosive atmosphere	Not Applicable
Dust resistance	Applicable
Solar radiation	Not Applicable
EMC	Applicable

1/ Perform per MIL-PRF-28800 table 2 except as specified in paragraph A.5.1 herein.
2/ Perform on OLTS outside (without) the transit case per MIL-PRF-28800 table 2 (see A.5.1 herein).
3/ Conformance to other non-measurement parameters are based on those found in SCAT 4954/SCAT 4952.

A.5 Verification. Unless otherwise specified, the performance requirements of 4.1 through 4.6 and Appendix A sections A.4.1 and A.4.2 shall comply with the verifications for the fleet use configuration (see Appendix A, table 6401 A-I) with the additional requirements and constraints specified in A.5.1. These requirements and constraints for configurations B and D include conformance to the environmental conditions in MIL-PRF-28800 (see table 6401 A-I). Requests for candidate submission and selection of the most suitable candidate for inclusion into the Government National Stock system (configurations B and D) shall be performed the Naval Inventory Control Point Mechanicsburg (NAVICP). NAVICP has the Naval Research Laboratory (NRL) do the testing to determine conformance to performance requirements. Method of verification shall be determined by NRL.

A.5.1 Environmental conditions. The OLTS shall be verified to meet the requirements of MIL-PRF-28800F class 3 for Navy shipboard, submarine, and shore applications, as specified in table 6401 A-I with the following exceptions:

a. The OLTS shall withstand a non-operating temperature requirement limited to the range of -20°C to +60°C at a non- condensing RH up to 95%.

b. The OLTS shall be sealed against dirt/humidity. Both the relative humidity test and the dust resistance test shall be performed with the OLTS outside the transit case.

c. The OLTS shall be ruggedized to accommodate minor impacts. The transit drop test shall be performed both with the OLTS in a hard transit case and with the OLTS outside the transit case (i.e., the equipment class where the OLTS enclosure is intended to act as the transit case). The bench handling test shall be performed on the OLTS outside the transit case.

d. The OLTS shall withstand an operating temperature requirement of -10C to +50C.

e. The OLTS shall be verified to meet EMC requirements without the electrostatic discharge immunity requirement.

REQUIREMENT 6401

Source: https://assist.dla.mil -- Downloaded: 2016-12-31T21:10Z
Check the source to verify that this is the current version before use.

REQUIREMENT 6402

MULTIMODE OPTICAL LOSS TEST SET (OLTS) PERFORMANCE REQUIREMENTS

1. Purpose. The performance requirements for a fiber optic test set that measures the optical loss on multimode fiber are specified herein. This type of fiber optic test set is referred to as an Optical Loss Test Set (OLTS). The intent of Requirement 6402 is to provide performance requirements, performance verification table and other needed clarification to determine compliance of a multimode OLTS to the specified performance requirements. This requirement is intended to support OLTS used for developmental, prototype, production, rework and modification programs on military platform fiber optic cable assemblies. Requirement 6402 is intended for Navy shipboard applications and those other applications in which the specified performance requirements can apply. Multiple OLTS configurations are specified. One configuration is intended for Fleet (military) use and one for those determining conformance to MIL-STD-2042, but not used by Fleet personnel.

1.1 Supplemental, item number. Item number 6203LB is assigned to the multimode OLTS that is found in Requirement 6203 for fleet use, interface with PC polished connectors.

1.2 Configurations. Two configurations are specified for the multimode, optical loss test set that interfaces with PC polished connectors (see 4.7). These two configurations are listed in table 6402-I.

1.2.1 MIL-STD-2042 compliance. Configuration A is intended for determining conformance to MIL-STD-2042. This configuration includes use by civilian personnel both in the Government and for contractors providing optical loss testing services to the Government. These performance requirements are a limited subset of those for configuration B and are listed in Requirement 6402.

1.2.2 Fleet (military) use. Configuration B is intended for Fleet (military) use. This configuration includes use by military personnel in Navy shipboard, submarine, and shore applications. These performance requirements were covered previously under a Subcategory (SCAT) code and are now updated and listed in Requirement 6402. These performance requirements are a larger set than those for configuration A. The increased requirements include those for environmental stresses/conditions (per MIL-STD-28800). These performance requirements are listed in appendix A of Requirement 6402.

TABLE 6402-I. Multimode Optical Loss Test Set (OLTS) configurations.

Configuration	Intended Use	Description 1/, 2/
A	MIL-STD-2042 compliance	OLTS, MM, SP1678 R6402, configuration A
B	Fleet 3/	OLTS, MM, SP1678 R6402, configuration B
1/ OLTS = Optical Loss Test Set, MM = Multimode 2/ SP1678 = Standard Practice MIL-STD-1678, R6402 = Requirement 6402 3/ Item 6203LB in Requirement 6203 table 6203-VII.		

2. Applicable documents.

2.1 General. The documents listed in this section are specified in sections 3, 4, and 5 of this standard practice. This section does not include documents cited in other sections of this standard practice or recommended for additional information or as examples. While every effort has been made to ensure the completeness of this list, document users are cautioned that they must meet all specified requirements of documents cited in sections 3, 4, and 5 of this standard practice, whether or not they are listed.

2.2 Government documents.

Source: https://assist.dla.mil -- Downloaded: 2016-12-31T21:10Z
Check the source to verify that this is the current version before use.

2.2.1 Specifications, standards, and handbooks. The following specifications, standards, and handbooks form a part of this document to the extent specified herein. Unless otherwise specified, the issues of these documents are those cited in the solicitation or contract.

DEPARTMENT OF DEFENSE STANDARDS

MIL-STD-2042- Fiber Optic Cable Topology Installation, Standard Methods for Naval Ships, Parts 1 to 6.

MIL-PRF-28800 - Test equipment for use with electrical and electronic equipment, general specification for

(Copies of these documents are available online at http://quicksearch.dla.mil or from the Standardization Document Order Desk, 700 Robbins Avenue, Building 4D, Philadelphia, PA 19111-5094.)

2.2.2 Other Government documents, drawings, and publications. The following other Government documents, drawings, and publications form a part of this standard practice to the extent specified herein. Unless otherwise specified, the issues are these documents are those cited in the solicitation or contract.

NSWC DD ltr. – Approved Equipment List

(A copy of this list can be obtained at NSWC DD Web Site in the NSWC DD Approved equipment list section. This NSWC Dahlgren fiber optic web site houses additional shipboard fiber optic information and policy letters that may be applicable to the requirements in this standard. Due to the dynamic nature of web addresses the current website URL can be obtained by e-mailing DLGR_NSWC_FOWEB@navy.mil with the subject line "WEBSITE URL REQUEST". An automated reply will contain the current web address.)

2.3 Non-Government documents. The following documents form a part of this document to the extent specified herein. Unless otherwise specified, the issues of these documents are cited in the solicitation or contract.

AMERICAN NATIONAL STANDARDS INSTITUTE

ANSI Z136.2 - Safe Use of Optical Fiber Communication Systems Utilizing Laser Diode and LED Sources.

(A copy of this document is available on-line at www.ansi.org or from the ANSI Customer Service Department, 25 W. 43rd Street, 4th Floor, New York, NY 10036.)

TELECOMMUNICATIONS INDUSTRY ASSOCIATION

TIA-455-22 Ambient Light Susceptibility.

(Copies of this document are available from http://www.tiaonline.org or from Telecommunications Industry Association, Standards and Technology Department, 2500 Wilson Boulevard Arlington, VA 22201.)

2.4 Order of precedence. Unless otherwise noted herein or in the contract, in the event of a conflict between the text of this document and the references cited herein, the text of this document takes precedence. Nothing in this document, however, supersedes applicable laws and regulations unless a specific exemption has been obtained.

3. Definitions.

3.1 Mandrel wrapping. The appropriate single fiber cable is wrapped around the mandrel until a specified stable value is indicated on the OLTS display. Ten mandrel wraps are usually sufficient to obtain a stable value. This is a way to terminate the fiber to eliminate any back reflected light at the point of the mandrel wrap and beyond.

REQUIREMENT 6402

Source: https://assist.dla.mil -- Downloaded: 2016-12-31T21:10Z
Check the source to verify that this is the current version before use.

3.2 Measurement Quality Jumper (MQJ). The Measurement Quality Jumper (MQJ) is a low loss jumper that is used with test equipment to perform optical loss measurements. The MQJ must meet stringent optical loss requirements to ensure accuracy of measurements performed. Measurements must be accurate and repeatable. The accuracy and repeatability of your measurement is only as good as your MQJ. As the MQJ degrades with use, so does the measurement accuracy. The MQJ consists of a single fiber cable with a connector at one end which mates to the test equipment (optical source and power meter) and a connector at the other end which mates to the link/segment under test.

3.3 Optical fiber. An optical fiber is a thin cylindrical dielectric (non-conductive) waveguide used to send light energy for communication. Optical fibers consist of three parts: the core, the cladding, and the coating or buffer. The choice of optical fiber materials and fiber design depends on operating conditions and intended application.

3.4 Optical fiber, multimode. A multimode optical fiber is one that supports the propagation of more than one bound mode (electromagnetic wave).

3.5 Optical fiber, single mode. A small core optical fiber where one bounded electromagnetic wave of light will propagate at the wavelength of interest.

3.6 Optical loss. A measurement performed of the optical power level in which the set setup uses an optical source, power meter and measurement quality jumpers (MQJ).

3.7 Optical Loss Test Set (OLTS). A fiber optic power level measurement device that contains both an optical source and a power meter within it case (enclosure). Most OLTS also contain the digital logic to perform calculations, have a user graphic display, and store then export data. Single mode OLTS also contain the fiber optic circuit paths to permit the measurement for optical return loss.

3.8 Optical source (fiber optic light source). A device that emits radiation in or near the visible region of the electromagnetic spectrum, for example, light-emitting diodes (LED), laser diodes (LD), and lamps (broad spectrum), for providing optical power to optical measurement system/instrumentation.

3.9 Optical return loss. This is the ratio of the reflected power, P_r, to the incident power, P_i, in the unit of measure of dB in a fiber optic system or link. The return loss is measured as a positive value. Although the ratio of reflected power to incident power is a fraction less than one, the minus sign in front of the equation for optical return loss makes the value calculated a positive quantity. The optical return loss is measured when two or more optical interfaces are in the fiber optic system or link.

3.10 Power meter (fiber optic detector or photo-detector). An optoelectronic device that accepts optical signals from an optical source through the propagation medium (including fiber optic cabling and the DUT or Device Under Test), detects them by converting them into electronic signals (through a light-sensitive element, such as a photodiode), amplifies, and further processes the electrical signal into units of measure of optical power in Watts (i.e., nano-Watts or micro-Watts) or power ratio in dB or dBm.

3.11 Reflectance. This is the ratio of the reflected power, P_r, to the incident power, P_i, in the unit of measure of dB at a single fiber optic interface or at one reflection point. The reflectance is measured as a negative value since the log of the ratio of reflected power to incident power is a fraction less than one (a negative value).

3.12 Support equipment. Equipment that is required to maintain, test, or operate an item, or facility, in its intended environment. An OLTS is one piece of support equipment.

REQUIREMENT 6402

Source: https://assist.dla.mil -- Downloaded: 2016-12-31T21:10Z
Check the source to verify that this is the current version before use.

3.13 Termination, connector. The process performed for placing a connector, terminus, splice or other device at the end of an optical fiber. This placement optically minimizes leakage/losses and reflection. Terminations are used to join or connect two adjacent optical fiber ends or to terminate the fiber at either a source (electrical to optical conversion) or receiver (optical to electrical conversion) where the light leaves the optical fiber (waveguide) and continues in a non-waveguide mode of propagation.

3.14 Termination, mandrel wrapping. See 3.1.

4. Requirements. The OLTS shall be capable of performing optical power loss measurements on multimode fiber optic paths. For this optical loss measurement, two identical units shall be interoperable (capable of performing measurements in a cooperative fashion). Commonality compliance is that in which bounds or restricts the OLTS to those recognized by the Joint Fiber Optic Working Group (JFOWG) and, as a result, cited in this Standard Practice. Requirements for the OLTS with a configuration of A comply with 4.1 through 4.6, depending upon configuration being offered (see 4.7). The requirements and methods to verify these requirements shall conform to table 6402-I for configuration A. A more extensive set of requirements (including conformance to the environmental conditions in MIL-PRF-28800) that are applicable to configuration B are listed in appendix A. For configurations A, the OLTS shall meet the requirements listed in table 6402–II.

4.1 Optical (light) source. Each optical source in the OLTS shall be restricted to containing a Class 1 Light Emitting Diode or LED (per ANSI Z136.2).

4.1.1 Wavelength. The OLTS shall contain at least two optical sources with a minimum at the wavelengths of 1300 nm ±30 nm and 850 nm ± 30 nm @ 25 ± 1°C

4.1.1.1 Bandwidth. < 170 nm

4.1.2 Launch conditions.

4.1.2.1 Coupled Power Ratio (CPR)
a. CPR 1300 nm source: Optical light source shall have a CPR value of [21 dB to 22 dB] ±0.5 dB (into 62.5 µm fiber).
b. CPR 850 nm source: Optical light source shall have a CPR value of [24 dB to 26 dB] + 0.5dB/-1.0 dB (into 62.5 µm fiber).

4.1.2.2 High Order Mode Power (HOMP)
a. HOMP 1300 nm source: Optical power loss in a nominal 62.5 µm fiber caused by five wraps around a 20 mm mandrel shall be in the range of 0.30 dB to 0.80 dB.
b. HOMP 850 nm source: Optical power loss in a nominal 62.5 µm fiber caused by five wraps around a 20 mm mandrel shall be in the range of 0.30 dB to 0.80 dB.

4.1.2.3 Fiber optic cables for CPR and HOMP verifications.
a. Single mode cable with 5.2 µm MFD at 850 nm wavelength.
b. Single mode cable with 9.2 µm MFD at 1310 nm wavelength.
c. Multimode cable with 62.5 µm core diameter at both 850 nm and 1300 nm wavelengths.
d. Government furnished equipment for MIL-STD-2042 compliance. Cables in 4.1.2.3a through 4.1.2.3.c terminated with ST connectors will be provided to manufacturers for CPR and HOMP measurements.
e. Government furnished equipment for Fleet use: Cables in 4.1.2.3a through 4.1.2.3.c terminated with diamond connectors will be provided to manufacturers for CPR and HOMP measurements.

4.1.3 Output power. > -21 dBm (into 62.5/125 µm).

4.1.3.1 Time stability. ≤ ± 0.1 dB / 4 hours and ≤ 0.05 dB peak/15 minutes; each stability level test performed at a constant temperature of 25 ± 1°C.

4.1.3.2 Temperature stability.
a. ≤ ± 0.25 dB for temperature variations of ±10°C in the range of 17°C to 40°C
b. ≤ ± 0.50 dB for temperature variations of ± 25°C in the range of 0°C to 50°C

Source: https://assist.dla.mil -- Downloaded: 2016-12-31T21:10Z
Check the source to verify that this is the current version before use.

4.1.3.3 Mechanical stability of connection port. Maximum variation of optical levels between repeated mating at the output port of the same unit shall be ≤ 0.1 dB

4.1.4 Output connector. See 4.6.3.1.

4.2 Power meter (optical detector).

4.2.1 Wavelength. Operational range at least 800 nm to 1650 nm (calibration at cardinal points is acceptable).

4.2.2 Measurement range. -55 dBm to +10 dBm.

4.2.3 Accuracy. ±6%; at –20dBm @ 1300 nm.

4.2.4 Linearity.
≤ ± 0.22 dB over the range of optical power -40 dBm to +10 dBm.
≤ ± 0.50 dB over the range of optical power -55 dBm to –40 dBm except 850 nm wavelength.
≤ ± 0.75 dB over the range of optical power -55 dBm to –40 dBm 850 nm wavelength.

4.2.5 Display. The measurement values with units of measure, setup parameters and other OLTS operations shall be observed by means of a digital display.

4.2.5.1 Parameters. (a) Power level in dBm; (b) Loss in dB; (c) Wavelength in nm; (d) Low battery indicator

4.2.5.2 Resolution. At least 4 digits for power XX.XX dB (two digits to the right of a decimal point) and one digit to indicate if it is a positive or negative value.

4.2.6 Input connector. See 4.6.3.1.

4.2.7 Mechanical stability of connector. Maximum variation of optical levels between repeated mating at the input port of the same unit shall be ≤ 0.02 dB.

4.3 Optical loss measurements. The OLTS shall provide the following measurements as a minimum.

4.3.1 Dual wavelength test: The OLTS shall be capable of performing loss tests in both 850 nm and 1300 nm wave lengths without relocating the fiber connections.

4.3.2 Manual mode tests: In manual mode the OLTS shall be capable of operating as optical source and optical power meter.

4.3.3 Referencing: The OLTS shall be capable of making power reference to itself or to a second unit using a reference cable.

4.4 Return loss. Not applicable.

4.5 Ambient light susceptibility. Ambient light susceptibility shall be < -60 dBm according to test procedure specified in standard TIA-455-22.

4.6 General requirements.

4.6.1 Power.

4.6.1.1 Warm up time. The equipment warm up time shall not exceed 20 minutes.

REQUIREMENT 6402

Source: https://assist.dla.mil -- Downloaded: 2016-12-31T21:10Z
Check the source to verify that this is the current version before use.

4.6.1.2 Internal DC battery: OLTS shall be capable of operating on either internal rechargeable or non-rechargeable batteries. Rechargeable batteries shall be provided for portable operation. For rechargeable batteries minimum operating time shall be at least 8 hours following a maximum recharge time of 14 hours. Non-rechargeable batteries shall be available from commercial market and the minimum operating time shall be at least 8 hours.

4.6.1.3 AC operation. External adapter provides DC to input jack. External adapter shall accept electrical power of 110/220 ±10% @ 60 Hz single phase.

4.6.1.4 Auto power off. The OLTS shall have an automatic turn off feature. The feature shall be activated when the absence of keyboard activity exceeds a set interval (5 to 15 minutes).

4.6.2 Physical features.

4.6.2.1 Dimensions. Less than 23 cm (9 in) height; 11 cm (4.3 in) width; 6 cm (2.4 in) depth for each test set.

4.6.2.2 Weight. 1 kg (2.2 lb) max for each test set (including source, sensor, and batteries)

4.6.3 Accessories.

4.6.3.1 Removable universal connector adapters are required to support interconnection on the optical (light) source and on the power meter (optical detector). The optical source shall support interconnection with UPC ST connector. The power meter shall support interconnection with UPC ST, UPC SC and UPC LC connectors.

4.6.3.2 Protective caps and dust covers. Protective caps/dust covers for optical ports shall be provided.

4.6.3.3 Transit case: A protective hard carrying case according to MIL-PRF-28800F shall be provided for transporting the OLTS. The transit case shall be capable to accommodate the OLTS, accessories, and at least the Operator's Manual.

4.6.3.4 Technical manual. Technical manuals shall be provided. At a minimum, these technical manuals shall consist of a Use manual and Installation manual (Operator's Manual).

4.6.3.5 Identification plate. The OLTS identification plate shall be permanently affixed to the OLTS. The identification plate shall contain the following information:

Manufacturer name and/or cage:
Part or model number:
Serial number:

4.7 Configurations. The OLTS specified in Requirement 6401 shall be configured for either Fleet use or for MIL-STD-2042 conformance.

4.7.1 MIL-STD-2042 conformance. The OLTS that is configured for MIL-STD-2042 conformance shall meet the more limited requirements in table 6402–II. This OLTS configuration shall be referred to as "configuration A.

4.7.2 Fleet use. The OLTS that is configured for Fleet use shall comply with the requirements specified in this requirement and Appendix A and in table 6402–II. This OLTS configuration shall be referred to as "configuration B".

5. Performance. The OLTS shall be used by civilian personnel to measure optical loss in multimode, fiber optic cabling systems for determining conformance to MIL-STD-2042. The requirements and means to show compliance (means of verification) with these requirements shall conform to table 6402–II.

5.1 Compliance verified. Once compliance of the OLTS to the performance requirements for configuration A is verified, the OLTS shall be listed on the NSWC DD Approved Equipment List.

REQUIREMENT 6402

Source: https://assist.dla.mil -- Downloaded: 2016-12-31T21:10Z
Check the source to verify that this is the current version before use.

5.2 Compliance test facility. Application for OLTS verification compliance to configuration A shall be submitted to NSWC DD by e-mail to NSWC DD Warfare Systems Department at DLGR_NSWC_FO_ENG@navy.mil. NSWC DD shall be the Government entity responsible for performing the testing to determine compliance to the performance requirements.

TABLE 6402–II. OLTS list of requirements and verification methods, for civilian use (configuration A).

Parameter	Requirement	Means of Verification
Optical (light) source	4.1	Compliance test 1/
Wavelength	4.1.1	Compliance test 1/
Launch conditions	4.1.2	
Coupled Power ratio (CPR)	4.1.2.1	Compliance test
Higher Order Mode Power (HOMP)	4.1.2.2	Compliance test
Output power	4.1.3	Compliance test
Time stability	4.1.3.1	Compliance test
Temperature stability	4.1.3.2	Compliance test
Mechanical stability of connector	4.1.3.3	Compliance test
Output connector	4.1.4	Visual/Mechanical Inspection
Power meter (optical detector)	4.2	
Wavelength	4.2.1	Compliance test 1/
Measurement range	4.2.2	
Accuracy	4.2.3	Compliance test 1/
Linearity	4.2.4	Compliance test 1/
Display: digital	4.2.5	Visual/Mechanical Inspection
Parameters	4.2.5.1	Visual/Mechanical Inspection
Resolution	4.2.5.2	Visual/Mechanical Inspection
Input connector	4.2.6	Visual/Mechanical Inspection
Mechanical stability of connector	4.2.7	Visual/Mechanical Inspection
Optical loss measurement	4.3	
Dual wavelength test	4.3.1	Visual/Mechanical Inspection
Manual mode test	4.3.2	Visual/Mechanical Inspection
Referencing	4.3.3	Visual/Mechanical Inspection
Return loss measurement	4.4	Not applicable
Ambient light susceptibility	4.5	Compliance test 1/
Non-measurement parameters		
General requirements	4.6	
Power	4.6.1	Visual/Mechanical Inspection
Warm up time	4.6.1.1	Visual/Mechanical Inspection
Internal DC battery	4.6.1.2	Visual/Mechanical Inspection
AC operation	4.6.1.3	Visual/Mechanical Inspection 2/
Auto power off	4.6.1.4	Visual/Mechanical Inspection
Lithium batteries	Not applicable	Not applicable
Physical features	4.6.2	
Dimensions	4.6.2.1	Visual/Mechanical Inspection
Weight	4.6.2.2	Visual/Mechanical Inspection
Accessories	4.6.3	
Connector adapters, removable	4.6.3.1	Visual/Mechanical Inspection
Protective caps	4.6.3.2	Visual/Mechanical Inspection
Transit case	4.6.3.3	Visual/Mechanical Inspection
Technical manual	4.6.3.4	Visual/Mechanical Inspection
Training material	Not applicable	Not applicable
Identification plate	4.6.3.5	Visual/Mechanical Inspection

1/ Manufacturer verification/calibration data may be submitted for compliance consideration.
2/ Manufacturer Compliance Statement in addition to Visual/Mechanical Inspection.

REQUIREMENT 6402

6. Notes.

Source: https://assist.dla.mil -- Downloaded: 2016-12-31T21:10Z
Check the source to verify that this is the current version before use.

6.1 Intended use. On these platforms, the OLTS is intended to measure the optical path from a terminus used in a MIL-PRF-28876/MIL-DTL-38999/MIL-PRF-64266 multiple termini connector or a single ferrule connector that is a part of (1) cable harnesses, and (2) equipment (electronic module/package) such as an ATR, LRC, LRM, LRU or WRA with internal fiber optics.

6.2 Requirement point of contact. Inquiries concerning the requirements listed for fiber optic test equipment for Navy shipboard applications should be addressed to DLGR_NSWC_FO_ENG@navy.mil.

REQUIREMENT 6402

Source: https://assist.dla.mil -- Downloaded: 2016-12-31T21:10Z
Check the source to verify that this is the current version before use.

OLTS CONFIGURATION FOR MILITARY APPLICATIONS

A.1. Intent. The OLTS configuration specified in this appendix is one that has a more extensive set of requirements (such as environmental conditions) than the OLTS configuration specified in Requirement 6402. This configuration, referred to as configuration B, is intended for Fleet (military) use. This configuration is for use by military personnel in Navy shipboard, submarine, and shore applications. The other configurations, configuration A, are not covered by this appendix and are for use by civilian personnel both in the Government and for contractors providing optical loss testing services to the Government.

A.2. Applicable documents.

A.2.1 General. The documents listed in this section are specified in sections A.3, A.4, and A.5 of this standard practice. This section does not include documents cited in other sections of this standard practice or recommended for additional information or as examples. While every effort has been made to ensure the completeness of this list, document users are cautioned that they must meet all specified requirements of documents cited in sections A.3, A.4, and A.5 of this standard practice, whether or not they are listed.

A.2.2 Government documents.

A.2.2.1 Specifications, standards, and handbooks. The following specifications, standards, and handbooks form a part of this document to the extent specified herein. Unless otherwise specified, the issues of these documents are those cited in the solicitation or contract.

DEPARTMENT OF DEFENSE STANDARDS

MIL-STD-1678-6- Fiber Optic Cabling Systems Requirements and Measurements (Part 6: Parts and Support Equipment Commonality and Standardization Requirements, Cable Harness Configurations) (Part 6 of 6 Parts)

MIL-PRF-28800 - Test Equipment for Use With Electrical and Electronic Equipment, General Specification For

(Copies of these documents are available online at http://quicksearch.dla.mil or from the Standardization Document Order Desk, 700 Robbins Avenue, Building 4D, Philadelphia, PA 19111-5094.)

A.2.2.2 Other Government documents, drawings, and publications. The following other Government documents, drawings, and publications form a part of this standard practice to the extent specified herein. Unless otherwise specified, the issues are these documents are those cited in the solicitation or contract.

SCAT 4954/SCAT 4952, NRL 5524 of 13 March 2002

(A copy of where to obtain this SCAT can be requested by e-mailing DLGR_NSWC_FOWEB@navy.mil with the subject line "SCAT REQUEST".)

A.2.3 Order of precedence. Unless otherwise noted herein or in the contract, in the event of a conflict between the text of this document and the references cited herein, the text of this document takes precedence. Nothing in this document, however, supersedes applicable laws and regulations unless a specific exemption has been obtained.

A.3. Definitions. Definitions for terms used in this appendix can be found in paragraph 3 of Requirement 6401.

REQUIREMENT 6402

Source: https://assist.dla.mil -- Downloaded: 2016-12-31T21:10Z
Check the source to verify that this is the current version before use.

A.4. Requirements. The OLTS shall be capable of performing optical power loss measurements on multimode fiber optic paths. For this optical loss measurement, two identical units shall be interoperable (capable of performing measurements in a cooperative fashion). Commonality compliance is that in which bounds or restricts the OLTS to those recognized by the Joint Fiber Optic Working Group (JFOWG) and, as a result, cited in this Standard Practice. Requirements for the OLTS shall comply with 4.1 through 4.6 and with this appendix A.4.1 and A.4.2. The requirements and methods to verify these requirements shall conform to table 6207A - I for configuration B. Constraints on verification and for conformance to the environmental conditions in MIL-PRF-28800 are listed in A.5.1.

A.4.1 Power. In addition to those requirements specified in 4.6.1, the OLTS shall meet the requirements of A.4.1.1.

A.4.1.1 Lithium batteries. Per MIL-PRF-28800F, lithium batteries are prohibited without prior authorization. Requests for approving the use of lithium batteries, including those encapsulated in integrated circuits, shall be submitted to the procuring activity at the time of submission of proposals. Approval shall apply only to the specific model proposed. Proposed lithium cells/batteries shall be constrained to those requirements specified in MIL-STD-1678-6 Requirement 6404. Reporting and design requirements for lithium batteries shall conform to MIL-STD-1678-6 Requirement 6404.

A.4.2 Accessories. In addition to those requirements specified in 4.6.3, the OLTS shall meet the requirements of A.4.2.1 through A.4.2.3.

A.4.2.1 Technical manual. Technical manuals shall conform to MIL-PRF-28800F. A Use and Installation manual (Operator's Manual) shall be provided separately. Maintenance and Servicing manual shall be provided with all three levels of maintenance; unit operational verification, module level, and component level. The technical manual shall be provided in both printed and electronic formats. The printed format shall be otherwise normally provided. The electronic format shall consist of the installation programs for the latest version of Adobe Acrobat for all computer platforms for which Acrobat is available and the technical manual in an electronic form that is readable through use of the Adobe Acrobat application. A statement of copy right release for reproduction of technical manual for government use shall be printed in the first two pages of each technical manual. A statement of copy right release for reproduction of technical manual CD for government use shall be printed on each CD.

A.4.2.2 Training material. Training material that demonstrates the features, basic operations and procedures with step-by-step instructions for using the equipment as an OLTS/ORLM shall be provided. The material can be either on a CD with an interactive feature or in a technical manual format.

A.4.2.3 Identification plate. As per MIL-PRF-28800F, the OLTS identification plate shall be permanently affixed to two places on the OLTS and in front of the transit case. The identification plate shall contain the following information:
Manufacturer name and/or cage:
Part or model number:
Serial number:
National stock number:
Contract Number:
Military nomenclature or "Part of":

Source: https://assist.dla.mil -- Downloaded: 2016-12-31T21:10Z
Check the source to verify that this is the current version before use.

TABLE 6402A – I. OLTS list of requirements and verification methods, for Fleet use (Configurations B and D).

Parameter	Requirement
Optical (light) source	4.1
Wavelength	4.1.1
Launch conditions	4.1.2
Coupled Power ratio (CPR)	4.1.2.1
Higher Order Mode Power (HOMP)	4.1.2.2
Output power	4.1.3
Time stability	4.1.3.1
Temperature stability	4.1.3.2
Mechanical stability of connector	4.1.3.3
Output connector	4.1.4
Power meter (optical detector)	4.2
Wavelength	4.2.1
Measurement range	4.2.2
Accuracy	4.2.3
Linearity	4.2.4
Display: digital	4.2.5
Parameters	4.2.5.1
Resolution	4.2.5.2
Input connector	4.2.6
Mechanical stability of connector	4.2.7
Optical loss measurement	4.3
Dual wavelength test	4.3.1
Manual mode test	4.3.2
Referencing	4.3.3
Return loss measurement	Not applicable
Ambient light susceptibility	4.5

See notes at end of table.

Source: https://assist.dla.mil -- Downloaded: 2016-12-31T21:10Z
Check the source to verify that this is the current version before use.

TABLE 6402 A-I. OLTS list of requirements and verification methods, for fleet use (Configurations B and D)- Continued.

Non-measurement parameters	**Requirement**
General requirements	4.6
Power	4.6.1
Warm up time	4.6.1.1
Internal DC battery	4.6.1.2
AC operation	4.6.1.3
Auto power off	4.6.1.4
Lithium batteries	APPENDIX A - A.4.1.1
Physical features	4.6.2
Dimensions	4.6.2.1
Weight	4.6.2.2
Accessories	4.6.3
Connector adapters, removable	4.6.3.1
Protective caps	4.6.3.2
Transit case	4.6.3.3
Technical manual	APPENDIX A – A.4.2.1
Training material	APPENDIX A – A.4.2.2
Identification plate	APPENDIX A – A.4.2.3
MIL-PRF-28800 table 2 environmental conditions	APPENDIX A - A.5.1
Temperature, not operating	Class 3
Temperature, operating	Class 3
Relative humidity	Class 3
Altitude, not operating	Class 3
Altitude, operating	Class 3
Vibration limits	Class 3
Bounce, loose cargo	Not Applicable
Shock, functional	Class 3
Transit drop	Class 3
Bench handling	Class 3
Shock, high impact	Not Applicable
Watertight	Not Applicable
Splash proof	Not Applicable
Drip proof	Not Applicable
Fungus resistance	Class 3
Salt exposure, enclosure	Class 3
Salt exposure, structural parts	Class 3
Explosive atmosphere	Not Applicable
Dust resistance	Applicable
Solar radiation	Not Applicable
EMC	Applicable

1/ Perform per MIL-PRF-28800 table 2 except as specified in paragraph A.5.1 herein.
2/ Perform on OLTS outside (without) the transit case per MIL-PRF-28800 table 2 (see A.5.1 herein).
3/ Conformance to other non-measurement parameters are based on those found in SCAT 4954/SCAT 4952.

REQUIREMENT 6402

Source: https://assist.dla.mil -- Downloaded: 2016-12-31T21:10Z
Check the source to verify that this is the current version before use.

A.5 Verification. Unless otherwise specified, the performance requirements of 4.1 through 4.6 and appendix A sections A.4.1 and A.4.2 shall comply with the verifications for the Fleet use configuration (see appendix A, table 6402A – I) with the additional requirements and constraints specified in A.5.1. These requirements and constraints for configuration B includes conformance to the environmental conditions in MIL-PRF-28800 (see table 6402A – I). Requests for candidate submission and selection of the most suitable candidate for inclusion into the Government National Stock system (configurations B and D) shall be performed the Naval Inventory Control Point Mechanicsburg (NAVICP). NAVICP has the Naval Research Laboratory (NRL) do the testing to determine conformance to performance requirements. Method of verification shall be determined by NRL.

A.5.1 Environmental conditions. The OLTS shall be verified to meet the requirements of MIL-PRF-28800F class 3 for Navy shipboard, submarine, and shore applications, as specified in table 6402A – I with the following exceptions:

a. The OLTS shall withstand a non-operating temperature requirement limited to the range of -20°C to +60°C at a non- condensing RH up to 95%.

b. The OLTS shall be sealed against dirt/humidity. Both the relative humidity test and the dust resistance test shall be performed with the OLTS outside the transit case.

c. The OLTS shall be ruggedized to accommodate minor impacts. The transit drop test shall be performed both with the OLTS in a hard transit case and with the OLTS outside the transit case (i.e., the equipment class where the OLTS enclosure is intended to act as the transit case). The bench handling test shall be performed on the OLTS outside the transit case.

d. The OLTS shall withstand an operating temperature requirement of -10C to +50C.

e. The OLTS shall be verified to meet EMC requirements without the electrostatic discharge immunity requirement.

REQUIREMENT 6402

Source: https://assist.dla.mil -- Downloaded: 2016-12-31T21:10Z
Check the source to verify that this is the current version before use.

REQUIREMENT 6403

POLISHING APPROVAL PROCESS CRITERIA
FOR USE OF A MACHINE POLISHER WITH ALTERNATE POLISHING MATERIALS

1. Purpose: The criteria for the process to approve the use of a machine polisher (polishing machine) is specified herein. These criteria are applied when there is an activity/vendor pursing approval for the use of a machine polisher with alternate polishing materials (i.e., an alternate machine polishing process) that is not rigidly adhering to the use of the polishing papers for the hand polishing processes in MIL-STD-2042.

1.1 Current constraint. In accordance with MIL-STD-2042, alternate polishing materials may be used if authorized approval is obtained. If the manufacturing process is proprietary, then approval is limited to the requesting activities internal cable assembly locations (i.e., where the polishing steps for the cable assembly fabrication occurs). Polishing processes performed in the Fleet/field must be accessible to auditors.

1.2 Objective. The objective is to use a machine polisher with a polishing process that produces the same end face geometry, same visual inspection quality and minimizes the change in the ferrule protrusion length during the polishing process to the extent of not affecting optical performance during environmental exposures (such as temperature, vibration, shock) as is obtained with the MIL-STD-2042 polishing process.

2. Applicable documents.

2.1 General. The documents listed in this section are specified in sections 3, 4, and 5 of this standard practice. This section does not include documents cited in other sections of this standard practice or recommended for additional information or as examples. While every effort has been made to ensure the completeness of this list, document users are cautioned that they must meet all specified requirements of documents cited in sections 3, 4, and 5 of this standard practice, whether or not they are listed.

2.2 Government documents.

2.2.1 Specifications, standards, and handbooks. The following specifications, standards, and handbooks form a part of this document to the extent specified herein. Unless otherwise specified, the issues of these documents are those cited in the solicitation or contract.

DEPARTMENT OF DEFENSE SPECIFICATIONS

MIL-PRF-29504 - Termini, Fiber Optic Connector, Removable, General Specification for

MIL-PRF-29504/14 - Termini, Fiber Optic, Connector, Removable, Environment Resisting, Pin Terminus, Front Release, Ceramic Ferrule, (for MIL-PRF-28876 Connectors)

MIL-PRF-29504/15 - Termini, Fiber Optic, Connector, Removable, Environment Resisting, Socket Terminus, Front Release, Ceramic Ferrule, (for MIL-PRF-28876 Connectors)

MIL-PRF-29504/18 - Termini, Fiber Optic, Connector, Removable, Environment Resisting, Genderless Terminus, Rear Release, Ceramic Ferrule, 1.25 MM Ferrule, (for MIL-PRF-64266 Connectors)

MIL-PRF-29504/20 - Test terminus, Fiber Optic, Keyed, Connector, Removable, Environment Resisting, Genderless Terminus, Rear Insert/Rear Release, 1.25 mm Ceramic Ferrule, (for MIL-PRF-64266 Connectors).

MIL-DTL-83522 - Connectors, Fiber Optic, Single Terminus, General Specification for

MIL-DTL-83522/16 - Connectors, Fiber Optic, Single Terminus, Plug, Bayonet, Coupling (ST Style), 2.5 Millimeters Diameter Ferrule, Epoxy

Source: https://assist.dla.mil -- Downloaded: 2016-12-31T21:10Z
Check the source to verify that this is the current version before use.

MIL-PRF-85045 - Cables, Fiber Optics, (Metric), General Specification For

MIL-PRF-84045/16 – Cable, Fiber Optic, One Fiber, Cable Configuration Type 1 (Buffered Fiber), Tight Buffer, Cable Class SM and MM (Metric)

DEPARTMENT OF DEFENSE STANDARDS

MIL-STD-2042 - Fiber Optic Cable Topology Installation, Standard Methods for Naval Ships, Parts 1 to 6.

MIL-STD-1678 - Fiber Optic Cabling Systems Requirements and Measurements, Parts 1 to 6

(Copies of these documents are available online at http://quicksearch.dla.mil or from the Standardization Document Order Desk, 700 Robbins Avenue, Building 4D, Philadelphia, PA 19111-5094.)

2.2.2 Other Government documents, drawings, and publications. The following other Government documents, drawings, and publications form a part of this standard practice to the extent specified herein. Unless otherwise specified, the issues are these documents are those cited in the solicitation or contract.

NSWC DD ltr. – Recommended Parts List

(A copy of this list can be obtained at NSWC DD Web Site in the NSWC DD Recommended Parts List section. This NSWC Dahlgren fiber optic web site houses additional shipboard fiber optic information and policy letters that may be applicable to the requirements in this standard. Due to the dynamic nature of web addresses the current website URL can be obtained by e-mailing DLGR_NSWC_FOWEB@navy.mil with the subject line "WEBSITE URL REQUEST". An automated reply will contain the current web address.)

2.3 Order of precedence. Unless otherwise noted herein or in the contract, in the event of a conflict between the text of this document and the references cited herein, the text of this document takes precedence. Nothing in this document, however, supersedes applicable laws and regulations unless a specific exemption has been obtained.

3. Definitions.

3.1 Connector, fiber optic. A device that permits repeated mating and couples the optical power between two optical fibers or two groups of optical fibers. A fiber optic connector must maintain fiber alignment without significant loss of optical power.

3.2 Ferrule end face. Surface of the ferrule used to make contact with the mating ferrule and/or the mating fiber. This surface is perpendicular to the longitudinal axis of the optical fiber.

3.3 Ferrule length gauge. An instrument used to measure the protruding ferrule length from the barrel (body) of the fiber optic terminus or single ferrule connector to the ferrule end face.

3.4 Machine polisher. A device or mechanism used to finely grind the ferrule end face of a single ferrule connector or terminus without any human intervention during the grinding process. Unless the machine polisher is automated, human intervention is required for setup and adjustment. This is opposed to a hand polish that is performed by human interaction with polishing tools.

3.5 Measurement Quality Jumper (MQJ). The Measurement Quality Jumper (MQJ) is a low loss jumper that is used with test equipment to perform optical loss measurements. The MQJ must meet stringent optical loss requirements to ensure accuracy of measurements performed. Measurements must be accurate and repeatable. The accuracy and repeatability of your measurement is only as good as your MQJ. As the MQJ degrades with use, so does the measurement accuracy.

REQUIRMENT 6403

Source: https://assist.dla.mil -- Downloaded: 2016-12-31T21:10Z
Check the source to verify that this is the current version before use.

3.6. Polish. The process that removes most surface imperfections on the end face of the fiber caused by the cleaving the fiber. This process is performed in multiple steps. In each step, the connector/terminus ferrule is placed into a polishing tool/puck and moved over a specified roughness (grit) abrasive paper, usually in a figure-eight motion. Polishing steps proceed from rough to fine polish. For more enhanced return loss results, a slurry polish would be included as the last step in the process.

3.7 Polish, Angle Physical Contact (APC). Ferrule end face is polished in a manner so that the fibers are the first to make contact when connection surfaces at an 8 degree angle from the perpendicular are mated together.

3.8 Polish, offset. The polish offset is the distance between the highest point on the connector end face (where the center of the bull's eye pattern is observed on an interferometer) and the center of the fiber. This offset is also referred to as the linear offset, eccentricity or apex offset.

3.9 Polish, Physical Contact (PC). Ferrule end face is polished in a manner so that the fibers are the first to make contact when connection surfaces are mated together.

3.10 Polishing Tool (Puck), APC polish. A fixture used in the polishing process to hold the ferrule of a single ferrule connector or a terminus so that ferrule end face is at an 8 degree angle from the perpendicular and extends below the fixture's flat bottom.

3.11 Polishing Tool (Puck), PC polish. A fixture used in the polishing process to hold the ferrule of a single ferrule connector or a terminus so that ferrule end face is perpendicular to and extends below the fixture's flat bottom.

3.12 Support equipment. Equipment that is required to maintain, test, or operate an item, or facility, in its intended environment. A machine polisher is one piece of support equipment.

3.13 Termination, connector. The process performed for placing a connector, terminus, splice or other device at the end of an optical fiber. This placement optically minimizes leakage/losses and reflection. Terminations are used to join or connect two adjacent optical fiber ends or to terminate the fiber at either a source (electrical to optical conversion) or receiver (optical to electrical conversion) where the light leaves the optical fiber (waveguide) and continues in a non-waveguide mode of propagation.

3.14 Termini. A component used in a fiber optic, multiple termini, connection that is inserted into one of the insert cavity of a multiple termini connector and terminated onto the end of a simplex, fiber optic cable. Termini is the plural form for the word terminus.

3.15 Terminus. This term is the singular form for the word termini.

4. Requirements. The requesting activity or vendor (see 6.2) shall be capable of demonstrating that use of a specific machine polisher with alternate polishing materials shall meet the actions cited in table 6403-I. Alternate polishing materials (i.e., an alternate machine polishing process) are defined as ones that are not rigidly adhering to the use of the polishing films (also referred to as papers or disks) as specified for the hand polishing process in MIL-STD-2042.

4.1 Work instructions. Work instructions shall include the information in 4.1.1 through 4.1.4.

4.1.1 Applicability. Applicable termini/connector types, fiber types (SM/MM), and polish types (standard, enhanced, APC) shall be identified.

4.1.2 Techniques. These techniques shall include information on operation and lessons learned for use with the machine polisher. The techniques used shall be stated to minimize the change in the ferrule protrusion length (i.e., minimize ferrule material removal) during the polishing process.

REQUIRMENT 6403

Source: https://assist.dla.mil -- Downloaded: 2016-12-31T21:10Z
Check the source to verify that this is the current version before use.

4.1.3 Polishing steps. The steps performed during the polishing process shall be provided.

4.1.3.1 Parameters. Details within each step shall include the polishing films, wet or dry polish, speed, duration, pad durometer, pressure and values for other critical parameters. Details can be provided in a tabular format.

4.1.3.2 Various configurations. Variations of each step shall be included that accounts for different termini/connector types, fiber types, and polish types.

4.1.4 Approval. Work instructions are approved once step 3 in table 6403-I is completed.

4.2 Termination. Except for the alternate polishing process, termination of the test samples shall be performed in accordance with MIL-STD-2042.

4.2.1 Test sample configuration (terminated cable assembly). Connections listed in table 6403-II shall be terminated onto the ends of MIL-PRF-84045/16 to comprise the terminated cable assembly once step 5 in table 6403-I is completed. Connectors to be placed on each end of the MIL-PRF-85045/16 cable shall be those listed in table 6403-III. Specific cable type used (i.e., either MIL-PRF-85045/16-01 or MIL-PRF-85045/16-02) shall conform to table 6403-IV.

4.2.2 Alternate polishing process. The alternate polishing process shall be performed to the approved work instructions as specified in 4.1. Polish type for each of the terminated cable assemblies in the set shall conform to the quantities listed in table 6403-IV.

4.3 Applicable connector/terminus types. Terminated cable assemblies along with the connectors/termini used (in table 6403-II and table 6403-III) may be tailored by the approving activity depending upon the connector/terminus types to be covered under the polishing process submitted for approval.

5. Verification. Verifications shall consist of those performed by either the requesting activity or by the submitting activity as listed in table 6403-I and as further detailed in 5.1 through 5.5.

5.1 Proposal. The request to use a machine polisher with an alternate polishing process shall be prepared as a proposal. This proposal shall include information on the machine polisher, scope of the alternate polishing process and intended use or customer. The scope shall include planned deviations from that cited in MIL-STD-2042.

5.2 Work instructions. Review shall include compliance with table 6403-I and 4.1.

5.3 Pre-polished ferrule protrusion length. Measurement shall be performed using a tool that complies with MIL-STD-1678 Requirement 6305. Measurement of the ferrule protrusion length shall consist of the length as specified in 6.2 of MIL-STD-1678 Requirement 6305.

5.4 Optical measurements. Optical measurement for optical insertion loss and optical return loss shall comply with MIL-STD-1678 Measurement 2101 and MIL-STD-1678 Measurement 2105, respectively.

5.5 Post polished measurements. Measurements shall be performed as listed in 5.5.a through e.

a. Measurement for visual inspection: MIL-STD-1678 Measurement 3105 with note 7/ of table 6403-I.
b. Measurement for optical insertion loss: MIL-STD-1678 Measurement 2101 with note 8/ of table 6403-I.
c. Measurement for optical return loss: MIL-STD-1678 Measurement 2105 with note 9/ of table 6403-I.
d. Measurement for end face geometry: note 10/ of table 6403-I.
e. Measurement for ferrule protrusion length: See 5.3.

Source: https://assist.dla.mil -- Downloaded: 2016-12-31T21:10Z
Check the source to verify that this is the current version before use.

TABLE 6403-I. Actions (steps) required for polishing approval process.

Step	Action	Submits 1/	Receives 1/	Addendum
1	Submits request, including proposed equipment and scope of process	Requesting Activity	Approving Activity	2/
2	Provides feedback on either to proceed or not-proceed with approval process	Approving Activity	Requesting Activity	
3	Submits work instructions and machine polisher alternate polishing process	Requesting Activity	Approving Activity	
4	Submits unterminated samples (pre-polished submittal, see table 6403-II) for measurement of ferrule protrusion length	Requesting Activity	Approving Activity	3/
5	Measures pre-polished ferrule protrusion length and returns samples	Approving Activity	Requesting Activity	
6	Performs termination in accordance with the work instructions and machine polisher alternate polishing process	Requesting Activity	Approving Activity	4/, 5/
7	Performs Optical Insertion Loss (OIL) and Optical Return Loss (ORL) testing and submits all cable assemblies along with test data	Requesting Activity	Approving Activity	6/
8	Performs the following post polished measurements:			
8a	Visual inspection	Approving Activity	See step 9	7/
8b	Insertion loss	Approving Activity	See step 9	8/
8c	Return loss	Approving Activity	See step 9	9/
8d	End face geometry	Approving Activity	See step 9	10/
8e	Ferrule protrusion length	Approving Activity	See step 9	11/
9	Provides results and decision on approval of alternate polishing process	Approving Activity	Requesting Activity	

Notes:
1/ See 6.2.
2/ Include the following items that are applicable to request: connectors, standard/enhanced polishing, measurement/reference quality jumpers.
3/ Samples or packaging shall have a unique marking so that the sample can be tracked for the post polishing stock length measurement.
4/ Samples shall maintain the same unique identification marking for each connector/terminus used in step 3.
5/ The Government may require witnessing of the process at manufacturer location.
6/ End face geometry data should be submitted also, if available.
7/ Perform in accordance with (IAW) MIL-STD-2042, supplemented by MIL-STD-1678 measurement 5202.
8/ Criteria: < 0.75 for shipboard use or IAW MQJ criteria if part of MQJ process.
9/ Criteria: IAW with MIL-STD-2042 for polishing process being pursued.
10/ Criteria: MIL-STD-1678 measurement 5201.
11/ Results will be compared to other similar studies for acceptance.

REQUIREMENT 6403

Source: https://assist.dla.mil -- Downloaded: 2016-12-31T21:10Z
Check the source to verify that this is the current version before use.

TABLE 6403-II. Unterminated connector/terminus for pre-polish ferrule protrusion height measurement.

Set	Connector/Terminus Type	Specific Vendor	Quantity
1	MIL-PRF-29504/14	Delphi style 1/, 2/	10
2	MIL-PRF-29504/14	AFSI style 1/, 2/	10
3	MIL-PRF-29504/15	Delphi 1/, 2/	5
4	MIL-PRF-29504/15	AFSI 1/, 2/	5
5	MIL-PRF-29504/18	Any QPL source 3/, 4/	10
6	MIL-PRF-29504/20 5/	Any QPL source 3/, 4/	10
7	ST connector	6/	20
8	SC connector, PC	7/	10
9	SC connector, APC	7/	10
10	LC connector	7/	10

1/ Delphi or other QPL source with a narrow pedestal ferrule end face.
2/ AFSI or other QPL source with a broad pedestal ferrule end face.
3/ Unless otherwise determined by the approving activity at the time of the request, any qualified QPL source may be used.
4/ Any qualified source is either MIL-PRF-29504/18 or MIL-PRF-29504/20 termini, as applicable from any approved QPL source.
5/ Set 6 is required only if pursuing the APC polish.
6/ Any qualified source is either a COTS ST connector from NSWC DD Recommended Parts List or a MIL-PRF-83522/16 connector from any approved QPL source.
7/ COTS connectors from NSWC DD Recommended Parts List.

TABLE 6403-III. Terminated cable assemblies for post polish measurements, connector-to-terminus.

Set	Cable Assembly Type 1/	Specific Terminus Vendor	Quantity 2/
1	ST-to-MIL-PRF-29504/14	Delphi style 3/, 4/	10
2	LC-to-MIL-PRF-29504/14	AFSI style 3/, 4/	10
3	SC-to-MIL-PRF-29504/15	Delphi style 3/, 4/	5
4	SC-to-MIL-PRF-29504/15	AFSI style 3/, 4/	5
5	ST-to-MIL-PRF-29504/18	Any QPL source	10
6 5/	APC SC-to-APC MIL-PRF-29504/20	Any QPL source	10

1/ Connectors and termini used in these cable assemblies are those submitted for pre-polished measurement of ferrule protrusion height.
2/ Quantity is for the number of cable assemblies.
3/ Delphi or other QPL source with a narrow pedestal ferrule end face.
4/ AFSI or other QPL source with a broad pedestal ferrule end face.
5/ Set 6 is required only if pursuing the APC polish.

REQUIREMENT 6403

Source: https://assist.dla.mil -- Downloaded: 2016-12-31T21:10Z
Check the source to verify that this is the current version before use.

TABLE 6403-IV. Polish type for each terminated cable assembly.

Set	Cable Assembly Type 1/	Quantity with Each Polish type 2/, 3/, 4/			
		Standard PC Polish, MM 5/	Standard PC Polish, SM 6/	Enhanced PC Polish, SM 6/	APC Polish, SM 6/, 7/
1	ST-to-MIL-PRF-29504/14	2	2	6	--
2	LC-to-MIL-PRF-29504/14	2	2	6	--
3	SC-to-MIL-PRF-29504/15	1	1	3	--
4	SC-to-MIL-PRF-29504/15	1	1	3	--
5	ST-to-MIL-PRF-29504/18	2	2	6	--
6	APC SC-to-MIL-PRF-29504/20	--	--	--	10

1/ Same polish on both ends. Cable assembly minimum length is 1 meter from ferrule tip (end face) to ferrule tip.
2/ MM = Multimode, SM = Single Mode.
3/ Standard PC polish is the standard procedure for the domed end polish in MIL-STD-2024.
4/ Enhanced PC polish is the enhanced procedure for the domed end polish in MIL-STD-2024.
5/ Cable assembly shall be constructed with MIL-PRF-85045/16-01 multimode cable.
6/ Cable assembly shall be constructed with MIL-PRF-85045/16-02 single mode cable.
7/ Cable assembly with an APC polish shall be terminated with APC polished SC connectors, not ST connectors.

6. Notes.

6.1 Intents behind standardization efforts.

6.1.1 Multiple party testing considerations. The incentive to minimize test variables, resulting in a level playing field for multiple parties testing, leads the Government to establish a baseline. This baseline includes considerations for fabrication of test samples, methods to verify actions/measurements and use of specific test practices in addition to specifics for test sample configurations.

6.2 Requesting and approving parties.

6.2.1 Approving activity. Naval Surface Warfare Center Dahlgren Division (NSWC DD) is the approving activity for approval to use a machine polisher with alternate polishing materials as specified in Requirement 6403.

6.2.2 Requesting activity. Activity or vendor is under consideration for approval to use a machine polisher with alternate polishing materials. Consideration for approval is based on demonstrating compliance as specified in Requirement 6403.

REQUIREMENT 6403

Source: https://assist.dla.mil -- Downloaded: 2016-12-31T21:10Z
Check the source to verify that this is the current version before use.

REQUIREMENT 6404

REPORTING AND DESIGN REQUIREMENTS FOR LITHIUM BATTERIES

1 Intent. Fiber optic, portable test equipment (test equipment) is prohibited from containing lithium batteries without prior authorization (from the procurement agency or platform program manager). Requirement 6404 specifies the reporting information to be provided and the design requirements that must be met when the test equipment contains lithium batteries. The constraints apply to test equipment intended for use by military personnel in the Fleet/field and by civilian personnel both in the Government and for contractors providing testing services to the Government.

1.2. Limitations.

1.2.1 Types. Use of lithium battery types in test equipment is restricted to primary (non-rechargeable) lithium coin cells for integrated circuit memory retention and to secondary (rechargeable) lithium-ion batteries to power the test equipment.

1.2.1.2 Service. The set of requirements listed are specific to Navy shipboard, submarine, shore and Marine Corp applications; however, a similar set or requirements apply to other mobile military platforms (such as aircraft) and to the other services.

1.2 Hazard classification. The use of lithium cells and batteries in Navy systems and equipment offers the advantage of increased voltage and longer life, when compared to other power sources. Lithium batteries can provide increased energy density, extremely high currents, and can discharge very rapidly when short-circuited. Although these characteristics are useful in applications requiring sustained high current, a too-rapid discharge of a lithium battery can result in overheating of the battery, rupture, and even explosion. Because of these risks, lithium batteries shall be considered hazardous at all times. The Department of the Navy has adopted a Lithium Battery Safety Program to minimize hazards associated with their use.

2. Applicable documents.

2.1 General. The documents listed in this section are specified in sections 3, 4, and 5 of this standard practice. This section does not include documents cited in other sections of this standard practice or recommended for additional information or as examples. While every effort has been made to ensure the completeness of this list, document users are cautioned that they must meet all specified requirements of documents cited in sections 3, 4, and 5 of this standard practice, whether or not they are listed.

2.2 Government documents.

2.2.1 Other Government documents, drawings, and publications. The following other Government documents, drawings, and publications form a part of this standard practice to the extent specified herein. Unless otherwise specified, the issues are these documents are those cited in the solicitation or contract.

Source: https://assist.dla.mil -- Downloaded: 2016-12-31T21:10Z
Check the source to verify that this is the current version before use.

FEDERAL REGISTER

Code of Federal Regulations

Title 29 – Labor

(A copy of this document is available online at http://www.dol.gov/dol/cfr/Title_29 or from the U.S. Department of Labor, Frances Perkins Building, 200 Constituition Avenue, NW, Washington, DC 20210).

2.3 Order of precedence. Unless otherwise noted herein or in the contract, in the event of a conflict between the text of this document and the references cited herein, the text of this document takes precedence. Nothing in this document, however, supersedes applicable laws and regulations unless a specific exemption has been obtained.

2.4 Reporting. When the lithium cells or batteries do not meet the requirements of 4.1 or 4.2 whichever is applicable, then Navy entity certifying the test equipment must submit a request letter and safety data package to request the use of lithium batteries to the specified Navy technical authority. This reporting requires that the information listed in 3.1 through 3.5. This information is to be provided by the test equipment vendor prior to test equipment submittal for approval. When the lithium cells or batteries do meet the requirements of 4.1 or 4.2 whichever is applicable, then the reporting requirements are reduced to an initial procurement report with the information listed in 3.6.

3.1 Justification. Explain why a lithium cell and/or battery is needed.

3.2 Design data to report. Provide the proposed lithium cell or battery design data listed in a through o.

a. Manufacturer (name, address, phone number);

b. Model number and/or part number;

c. Electrical description (voltage, ampere-hour (Ah) capacity, and nominal load profile);

d. Electrical safety devices integral to the cell/battery;

e. Cell/battery configuration (cells/batteries in parallel or series);

f. Operating life (shelf life and functional life);

g. Physical dimensions and description (weight, size, geometry, number of cells, battery housing description);

h. Marking indicating battery chemistry;

Source: https://assist.dla.mil -- Downloaded: 2016-12-31T21:10Z
Check the source to verify that this is the current version before use.

i. Cell and/or battery yield pressure (if unvented, battery/housing room ambient yield pressure);

j. All applicable Material Safety Data Sheets (MSDSs), Product Information Sheets or equivalent document;

k. Cell failure mode (indicating whether a single cell failure can cascade into multiple cell failures).

l. Discharge rate.

m. For secondary batteries only, rated cycle-life (versus depth of discharge) and the mean-time-between failures for the cell/battery;

n. For secondary batteries only, discharge and recharge rates including the limiting discharge/charge rates.

o. For primary coin cells only, initial procurement report from the purchaser.

3.3 System information to report. Lithium battery powered system description listed in a through l.

a. Description of system purpose or function;

b. Manufacturer (name, address phone number);

c. Model number and/or part number and device name;

d. Diagram of the system's overall mechanical interfaces showing battery proximity to other equipment and energetic devices;

e. Battery installation (mounting, seals, electrical connectors);

f. Battery housing/container, strength, and free volume;

g. Safety features or venting mechanisms (description and estimate of operational venting pressure);

h. Current drain (load profile of the system);

i. Block diagram of system interfaces to the battery (electrical and physical);

j. Electrical schematic (showing fuses, blocking diodes, and external power interface);

k. Description of the charger and charge control mechanism, if applicable. (Are cells individually equilibrated, or is the battery charged as a series/parallel string?). Provide information for large form lithium batteries sufficient to support evaluation that features of the charging system related to charging safety have been included in the design, validated, and tested.

l. Description of other controls or mechanisms to enhance battery safety, such as a Battery Management System (BMS), software shutdown mechanism, etc.

3.4 Logistic information to report. Lithium battery logistical information listed in a through c.

a. Packaging. How will system/battery be packaged?

b. Storage facilities. How will system/battery be stored from delivery to disposal?

c. Transportation methods.

3.5 Test equipment point of contact. Provide name, organization (company), e-mail address and telephone number.

REQUIREMENT 6404

Source: https://assist.dla.mil -- Downloaded: 2016-12-31T21:10Z
Check the source to verify that this is the current version before use.

3.6 Initial procurement report requirements. When the lithium cells or batteries do meet the requirements of 4.1 or 4.2, whichever is applicable, then the information listed in a through e shall be reported.

a. Subject: Initial procurement report.

b. Manufacturer/brand name.

c. Model identification (name and number).

d. Use scenario/environment (e.g., surface ship, submarine, other network platform).

e. Point of contact (name, organization, e-mail, telephone number).

4. Design constraints. Test equipment with lithium cells or batteries must comply with the specific design constraints listed in 4.1 and 4.2. Also, batteries or cells shall be selected with the lowest possible total capacity to meet the test equipment electrical power requirement. When the lithium cells or batteries do not meet one or more of the requirements of 4.1 or 4.2, whichever is applicable, then the design constraints listed in 4.3 through 4.5 apply.

4.1 Non-rechargeable lithium coin cell. The design constraints shall conform to a through e.

a. Unmodified, commercial-off-the-shelf (COTS) item;

b. Used in single-cell configuration;

c. Maximum nominal output of 3 Volts;

d. Maximum rated capacity of 1 Ah;

e. The battery is protected from other sources of electrical power by appropriate combinations of blocking diodes and resistors.

4.2 Rechargeable lithium-ion batteries. The design constraints shall conform to a through g.

a. Unmodified, COTS battery;

b. Underwriter's Laboratories (UL) listed;

c. Used in the device as recommended by the manufacturer. Modifications to the devices may only be made in accordance with the manufacturer's recommendations; e.g., addition of memory;

d. Recharged only by devices expressly designed for recharge of the specific battery in use;

e. No more than four cells in series (less than or equal to 18-Volt output);

f. Rated for no more than 100 Watt-hours, as listed in the manufacturer's specification or calculated by multiplying the capacity in Ah by the maximum working (nominal performance) voltage;

g. There shall be no attempt to open, modify, reform, or repair batteries.

4.3 Battery protection. The design constraints shall conform to a through i.

a. Over-Current Protection. Each battery used as a power source shall contain a suitable over-current device. Devices shall either go to the open-circuit position if the battery is discharged at an excessive rate; e.g., fuse or relay; or must limit the current flow to a safe level; e.g., Positive Thermal Coefficient (PTC) Device. Batteries must be over-current protected in the ground lead of each series string. Each separate circuit shall be protected. If the battery is tapped to provide different output voltages, each tap shall be protected with an over-current device.

b. Charging Prevention. In primary (non-rechargeable) batteries consisting of series-parallel strings, each parallel string shall be protected to prevent any possibility of charging. If a primary (non-rechargeable) battery is connected to an external power source, the battery must be protected to prevent charging by the external power source.

REQUIREMENT 6404

Source: https://assist.dla.mil -- Downloaded: 2016-12-31T21:10Z
Check the source to verify that this is the current version before use.

c. Battery Compartment. The equipment shall be designed with a special compartment for the battery. This compartment shall have no interior projections or sharp edges that could damage the electrical insulation around the battery. The battery shall be secured within the compartment to resist shock and vibration to the levels required for end item use.

d. Power Switches. Power switches in the end item shall be selected to prevent accidental battery turn-on. Switching devices shall not be used in the ground leg(s).

e. Cell Uniformity. Cells of different physical characteristics, chemistries, or electrical parameters shall not be used in the same electrical circuit.

f. Internally-Pressurized Cells. All internally-pressurized cells shall be hermetically sealed and constructed so that the case-to-cover seal is a continuous weld, free from holes and other imperfections. The seal between the electrode and the cover shall be of the glass-or ceramic-to-metal or equivalent type and free from imperfections.

g. Safety-Venting Devices. Each cell, battery, and battery compartment must incorporate a safety-venting device or be designed and manufactured in such a manner that will preclude a violent rupture as a result of cell venting. Nothing shall be done in the design and construction that will degrade the vent.

h. Thermal Protection Devices. Consideration shall be given to the use of thermal protection devices, which go to the open-circuit position at temperatures of 91 degrees C (196 degrees F) or less. Thermal protection devices must be located in close proximity to each cell string, not physically isolated from the cell or cell string being protected.

i. Positive Protection Against Accidental Shorting. When the battery is not installed in equipment, the leads or connector plug shall be taped, guarded, or otherwise designed or provided with positive protection against accidental shorting.

4.4 Charging system. The design constraints shall conform to a through d.

a. Charging Sources. Rechargeable battery systems shall be designed to prevent charging by any charging source other than that specifically approved for the battery.

b. Cell-To-Cell Balancing Mechanisms. During charging, differences in individual cells may lead to differing voltages in cell groups. Some cells may be undercharged, with a result of decrease in the overall battery capacity. Conversely, some cells may be overcharged, with the result of cell damage, shortening of life cycle, or the creation of safety issues. In order to achieve a uniform state of charge, consideration shall be given to including a cell-to-cell balancing mechanisms for use during battery charging systems.

c. Overvoltage Protection. Rechargeable batteries shall have integrated overvoltage (over-charge) protection. These protections must disconnect the battery from the charging source. Disconnect must be automatic and not require operator action.

d. Battery Management System (Bms). Large form rechargeable batteries must use a battery management system that provides access to information on the performance, cycle-count, age, and condition of the battery. This BMS may be integral to the battery and include the protections of paragraph 4.4.b and 4.4.c above, or the BMS may be an interface to the system the battery is installed in. These guidelines are also recommended for smaller batteries.

4.5 Warning Labels. The test equipment shall have an external label warning users of the hazards associated with lithium batteries and shall be marked in accordance with container warning requirements of 29 Code of Federal Regulations (CFR) 1910.1200.

REQUIREMENT 6404

Source: https://assist.dla.mil -- Downloaded: 2016-12-31T21:10Z
Check the source to verify that this is the current version before use.

CONCLUDING MATERIAL

Custodians
Army - CR
Navy - AS
Air Force - 85
DLA - CC

Review activities:
Air Force – 20, 99

Preparing activity:
DLA - CC

(Project 60GP-2015-002)

NOTE: The activities listed above were interested in this document as of the date of this document. Since organizations and responsibilities can change, you should verify the currency of the information above using the ASSIST Online database at https://assist.dla.mil/.

Source: https://assist.dla.mil -- Downloaded: 2016-12-31T21:10Z
Check the source to verify that this is the current version before use.