INCH-POUND

MIL-C-39006D
23 December 1992
SUPERSEDING
MIL-C-39006C
20 October 1978

MILITARY SPECIFICATION

CAPACITORS, FIXED, ELECTROLYTIC (NONSOLID ELECTROLYTE), TANTALUM, ESTABLISHED RELIABILITY, GENERAL SPECIFICATION FOR

FAILURE RATE LEVEL L INACTIVE
FOR NEW DESIGN AFTER 27 MAY 1976

This specification is approved for use by all Departments and Agencies of the Department of Defense.

1. SCOPE

1.1 Scope. This specification covers tantalum, electrolytic (nonsolid electrolyte), fixed capacitors (polarized and nonpolarized), hermetically (see 6.7) and nonhermetically sealed in metal cases (see 6.1). Capacitors covered by this specification have reliability established for failure rate levels ranging from 2.0 (or 1.0) percent to 0.001 percent per 1,000 hours in accordance with MIL-STD-690. These FR levels are established at a 60-percent confidence level and are maintained at a 10-percent producer's risk. A Part Per Million (ppm) quality system is used for documenting and reporting the average outgoing quality of ER capacitors supplied to this specification. Statistical Process Control (SPC) techniques are required in the manufacturing process to minimize variation in production of ER capacitors supplied to the requirements of this specification.

1.2 Classification. Capacitors covered by this specification are classified by the style as specified (see 3.1).

2. APPLICABLE DOCUMENTS

2.1 Government documents.

2.1.1 Specifications, standards, and handbooks. The following specifications, standards, and handbooks form a part of this document to the extent specified herein. Unless otherwise specified, the issues of these documents are those listed in the issue of the Department of Defense Index of Specifications and Standards (DODISS) and supplement thereto, cited in the solicitation (see 6.2).

Beneficial comments (recommendations, additions, deletions) and any pertinent data which may be of use in improving this document should be addressed to: Defense Electronics Supply Center, ATTN: DESC-ES, 1507 Wilmington Pike, Dayton, OH 45444-5270 by using the Standardization Document Improvement Proposal (DD Form 1426) appearing at the end of this document, or by letter.

AMSC N/A
FSC 5910

DISTRIBUTION STATEMENT A. Approved for public release; distribution is unlimited.

Source: https://assist.dla.mil -- Downloaded: 2016-11-16T17:02Z
Check the source to verify that this is the current version before use.

SPECIFICATIONS

FEDERAL

QQ-S-571 - Solder, Tin Alloy, Tin-Lead Alloy, and Lead Alloy.

MILITARY

MIL-C-3965 - Capacitors, Fixed, Electrolytic (Nonsolid Electrolyte), Tantalum, General Specification for.
MIL-F-14256 - Flux, Soldering liquid (Rosin base).
MIL-I-23053 - Insulating Sleeving, Electrical, Heat Shrinkable, General Specification for.
MIL-C-39028 - Capacitors, Packaging of.

(See supplement 1 for list of associated specification sheets.)

STANDARDS

MILITARY

MIL-STD-202 - Test Methods for Electronic and Electrical Component Parts.
MIL-STD-690 - Failure Rate Sampling Plans and Procedures.
MIL-STD-790 - Reliability Assurance Program for Electronic Parts Specifications.
MIL-STD-810 - Environmental Test Methods.
MIL-STD-1276 - Leads, Weldable, for Electronic Component Parts Specifications.
MIL-STD-1285 - Marking of Electrical and Electronic Parts.

(Unless otherwise indicated, copies of federal and military specifications, standards, and handbooks are available from DODSSP - Customer Service, Standardization Document Order Desk, Building 4D, 700 Robbins Avenue, Philadelphia, PA 19111-5094.)

2.2 Non-Government publications. The following documents form a part of this document to the extent specified herein. Unless otherwise specified, the issues of the documents which are DoD adopted are those listed in the issue of the DODISS cited in the solicitation. Unless otherwise specified, the issues of documents not listed in the DODISS are the issues of the documents cited in the solicitation (see 6.2).

ELECTRONIC INDUSTRIES ASSOCIATION (EIA).

EIA-554 - Assessment of Outgoing Nonconforming Levels in Parts Per Million (PPM).
EIA-557 - Statistical Process Control Systems.

(Application for copies should be addressed to the Electronic Industries Association, Engineering Department, 2001 Pennsylvania Ave NW, Washington, DC 20006-1813.)

(Non-Government standards and other publications are normally available from the organization which prepares or distributes the documents. These documents also maybe available in or through libraries or other informational services.)

2.3 Order of precedence. In the event of a conflict between the text of this document and the references cited herein (except for related associated detail specifications, specification sheets, or MS standards), the text of this document takes precedence. Nothing in this document, however, supersedes applicable laws and regulations unless a specific exemption has been obtained.

3. REQUIREMENTS

3.1 Specification sheets. The individual item requirements shall be as specified herein and in accordance with the applicable specification sheets. In the event of any conflict between requirements of this specification and the specification sheet, the latter shall govern (see 6.2).

3.2 Qualification. Capacitors furnished under this specification shall be products which are authorized by the qualifying activity for listing on the applicable qualified products list at the time of award of contract (see 4.4 and 6.3). Unless procured from the manufacturer or his authorized distributor listed or approved for listing on the qualified products list, parts furnished under this specification shall not be considered as having met the requirements of this specification.

Source: https://assist.dla.mil -- Downloaded: 2016-11-16T17:02Z
Check the source to verify that this is the current version before use.

3.3 Reliability and quality.

3.3.1 Reliability. Reliability of ER capacitors furnished under this specification shall be established and maintained in accordance with the procedures and requirements specified in MIL-STD-790 and MIL-STD-690 with details specified in 4.1.2, 4.4.4.1, and 4.5. The reliability rating is identified by the following FR level symbols:

Symbol	FR level (percent per 1,000 hours)
L	2.0
M	1.0
P	0.1
R	0.01
S	0.001

3.3.2 Quality.

3.3.2.1 Statistical process control (SPC). The manufacturer shall implement and use statistical process control techniques in the manufacturing process for ER parts covered by this specification. The SPC program shall be developed and maintained in accordance with EIA-557. The SPC program shall be documented and maintained as part of the overall reliability assurance program as specified in MIL-STD-790. The implementation date for statistical process control shall be 12 months from the date of this specification. Processes for application of SPC techniques should include but are not limited to the following:

Slug Styles	Foil Styles
a. Pressing.	a. Incoming materials.
b. Sintering.	b. Electro-chemical processing.
c. Electro-chemical processing.	c. Assembly.
d. Sealing.	d. Sealing.
e. Finishing.	e. Finishing.

3.3.2.2 Quality levels. The quality of lots that have been subjected to and have passed the subgroup 100 percent screening inspections of group A inspection shall be established and maintained in accordance with 4.6.1.2.2 and EIA-554, method B. Individual ppm defect levels (i.e., ppm-2 and ppm-3) and an overall ppm defect level (i.e., ppm-5) shall be established based on the tests prescribed in the subgroup 2 tests of the group A inspections. The defect level for ppm-2 shall be less than 100 ppm. Data shall not be excluded from the appropriate ppm calculation unless specifically authorized by the qualifying activity. Guidance for exclusion of data is specified in EIA-554. The implementation of ppm verification shall be 12 months from the date of this specification.

3.3.2.3 Noncompliance. The contractor shall notify the qualifying activity when the 100 ppm level is reached or exceeded for ppm-2. The contractor shall provide sufficient information to the qualifying activity documenting the causes of the problem and what corrective action is being taken. Failure to correct this problem shall be the basis for removal of the affected product from the QPL.

3.4 Material. The material shall be as specified herein; however, when a definite material is not specified, a material shall be used which will enable the capacitors to meet the performance requirements of this specification. Acceptance or approval of any constituent material shall not be construed as a guarantee of the acceptance of the finished product.

3.4.1 Case. The case shall be of a corrosion-resisting material or shall be plated or treated to resist corrosion.

3.4.1.1 Sleeving (when applicable). The sleeving shall be of a nonfungus nutrient material and shall be in accordance with MIL-I-23053. In addition, the material shall not soften, creep, or shrink to a point where any part of the cylindrical portion of the case is left uncovered at any test temperature specified herein.

3.4.2 Solder. Solder shall be in accordance with QQ-S-571.

3.4.3 Soldering flux. Soldering flux shall be rosin, rosin and alcohol, or other flux as approved by the qualifying activity.

3.5 Design and construction. Capacitors shall be of the design, construction, and physical dimensions specified (see 3.1).

Source: https://assist.dla.mil -- Downloaded: 2016-11-16T17:02Z
Check the source to verify that this is the current version before use.

3.5.1 Case. Each capacitor shall be enclosed in a hermetically-sealed (type G-glass seal or T-glass-to-tantalum seal) or nonhermetically-sealed (type E seal) metal case (see 3.1) which will prevent leakage or evaporation of the electrolyte and, in addition, will protect the capacitor element against the entry of contaminants.

3.5.1.1 Sleeving (when applicable). The sleeving shall extend .016 inch (0.41 mm) minimum, .062 inch (1.57 mm) maximum, beyond each end of the capacitor body; however, if a shrink-fitted insulation is used for the sleeving, it shall lap over the ends of the capacitor body.

3.5.2 Capacitor element. The capacitor element shall consist of an anode of etched or plain tantalum foil or a sintered tantalum slug, and a cathode of etched or plain tantalum foil or other suitable metal cathode (see 3.1).

3.5.3 Terminals. All terminals shall be permanently secured internally and externally, as applicable. All external joints shall be soldered or welded. Terminals shall be tin-lead coated as specified in MIL-STD-1276.

3.5.3.1 Axial-wire lead. The cathode terminal for styles CLR65, CLR69, CLR79, CLR81, CLR75, and CLR76 shall conform to type C or N (see 3.1) of MIL-STD-1276; all other axial-wire lead terminals shall conform to type N31, N32, N51, or N52 (see 3.1) of MIL-STD-1276. The length and diameter shall be as specified (see 3.1).

3.5.3.2 Solder-lug. Solder-lug terminals shall be of a solid conductor of the shape specified (see 3.1).

3.5.3.3 Solder dip (retinning leads). Only the manufacturer (or his authorized category B distributor) may solder dip/retin the leads of capacitors supplied to this specification, provided the solder dip process has been approved by the qualifying activity.

3.5.3.3.1 Qualifying activity approval. Approval of the solder dip process will be based on one of the following options:

a. When the original lead finish qualified was hot solder dip lead finish 52 of MIL-STD-1276, the manufacturer shall use the same solder dip process for retinning as is used in the original manufacture of the product or one authorized by the manufacturer with approval based on the method outlined in b.

(NOTE: The 200 microinches maximum thickness requirement is not applicable.)

b. When the lead finish originally qualified was not hot solder dip lead finish 52 of MIL-STD-1276 as prescribed in 3.5.3.3.1a, approval for the process to be used for solder dip shall be based on the following test procedure:

(1) Thirty samples of the hermetic and 30 samples of the nonhermetic of any capacitance value for each style and lead finish are subjected to the manufacturer's solder dip process. Following the solder process, the capacitors shall be subjected to the electrical test of group A inspection (including the hermetic seal test if the device is hermetically sealed), with no defects allowed.

(2) Ten of the 30 samples shall then be subjected to the solderability test, with no defects allowed.

(3) The remaining 20 samples shall be subjected to the resistance to soldering heat test followed by the moisture resistance test (or hermetic seal test if the device is hermetically sealed), with no defects allowed.

3.5.3.3.2 Solder dip/retinning options. Only the manufacturer (or his authorized category B distributor) may solder dip/retin as follows:

a. As a corrective action if the lot fails the group A solderability test.

b. After the group A screening test. Following the solder dip/retinning process, the electrical and seal tests specified in group A, subgroup 1 shall be performed on a 13 piece sample randomly selected from the inspection lot. If there are one or more defects, 100 percent of the lot shall then be subjected to the test(s) from which the defect(s) originated. Following the test(s), the manufacturer shall submit the lot to the group A solderability test as specified in 4.6.1.3.3.

Source: https://assist.dla.mil -- Downloaded: 2016-11-16T17:02Z
Check the source to verify that this is the current version before use.

3.6 Constant voltage conditioning. When capacitors are conditioned as specified in 4.7.2, there shall be no evidence of mechanical damage or leakage of electrolyte.

3.7 DC leakage. When measured as specified in 4.7.3, the dc leakage shall not exceed the applicable value specified (see 3.1).

NOTE: For nonpolarized capacitors, the value applies to measurements in both directions except after environmental tests involving one directional polarization greater than 30 minutes, the value shall apply to the last poled direction only.

3.8 Capacitance. When measured as specified in 4.7.4, the capacitance shall be within tolerance of the nominal value specified (see 3.1).

3.9 Dissipation factor. When measured as specified in 4.7.5, the dissipation factor shall not exceed the value specified (see 3.1).

3.10 Seal (hermetically-sealed capacitors only, see 3.1). When capacitors are tested as specified in 4.7.6, there shall be no evidence of leakage.

3.11 Shock (specified pulse). When capacitors are tested as specified in 4.7.7, there shall be no momentary or intermittent contact of 0.5 millisecond (ms) or greater duration, or arcing or any other indication of breakdown, nor shall there be any open- or short-circuiting, mechanical damage or leakage of electrolyte.

3.12 Vibration, high frequency. When capacitors are tested as specified in 4.7.8, there shall be no intermittent contacts of 0.5 millisecond (ms) or greater duration, open- or short-circuiting, mechanical damage, or leakage of electrolyte. In addition, capacitors shall meet the following requirements:

DC leakage: Shall not exceed 125 percent of the applicable value specified (see 3.1).
Capacitance: Shall change not more than ±5 percent from the initial measured value (see 3.8).
Dissipation factor: Shall not exceed 115 percent of the applicable value specified (see 3.1).
Visual examination: There shall be no evidence of harmful corrosion (as defined in 3.14), mechanical damage, obliteration of marking, or leakage of electrolyte.

3.13 Thermal shock. When tested as specified in 4.7.9, capacitors shall meet the following requirements:

DC leakage: (Except CLR79 and CLR81, see 3.1.) Shall not exceed 125 percent of the applicable value specified (see 3.1).
Capacitance: Shall change not more than ±5 percent from the initial measured value (see 3.8).
Dissipation factor: Shall not exceed 115 percent of the applicable value specified (see 3.1).
External examination: There shall be no evidence of leakage of electrolyte.

3.14 Salt spray (corrosion). When capacitors are tested as specified in 4.7.10, there shall be no harmful corrosion, and at least 90 percent of any exposed metal surface of the capacitor shall be protected by the finish. There shall be no unwrapping of, or mechanical damage to, the insulating sleeving, when applicable. Marking shall remain legible.

NOTE: Harmful corrosion shall be construed as being any type of corrosion which in any way interferes with the mechanical or electrical performance of the capacitor.

3.15 Solderability (capacitors with axial-wire leads only, see 3.1). When capacitors are tested as specified in 4.7.11, the dipped portion of the terminations shall conform to the solid-wire termination criteria of method 208 of MIL-STD-202.

3.16 Terminal strength (direct load). When capacitors are tested as specified in 4.7.12, there shall be no loosening of or permanent damage to the terminals, terminal weld or solder, or seal.

3.17 Surge voltage. When tested as specified in 4.7.13, there shall be no intermittent contacts, open- or short-circuiting, mechanical damage, or leakage of electrolyte.

Source: https://assist.dla.mil -- Downloaded: 2016-11-16T17:02Z
Check the source to verify that this is the current version before use.

3.18 Moisture resistance. When tested as specified in 4.7.14, capacitors shall meet the following requirements:

DC leakage: Shall not exceed 125 percent of the applicable value specified (see 3.1).
Capacitance: Shall change not more than the percent specified (see 3.1) from the initial measured value (see 3.8).
Dissipation factor: Shall not exceed 115 percent of the applicable value specified (see 3.1).
Visual examination: There shall be no evidence of harmful corrosion (as defined in 3.14), mechanical damage, obliteration of marking, or leakage of electrolyte.

3.19 Dielectric withstanding voltage (insulated capacitors only, see 3.1). When tested as specified in 4.7.15, the sleeving shall withstand the potential without breakdown.

3.20 Insulation resistance (insulted capacitors only, see 3.1). When measured as specified in 4.7.16, the insulation resistance shall be not less than 100 megohms.

3.21 Low temperature (storage). When tested as specified in 4.7.17, capacitors shall meet the following requirements:

DC leakage: Shall not exceed the applicable value specified (see 3.1).
Capacitance: Shall change not more than the percent specified (see 3.1) from the initial measured value (see 3.8).
Dissipation factor: Shall not exceed the applicable value specified (see 3.1).
External examination: There shall be no evidence of leakage of electrolyte.

3.22 Stability at low and high temperatures. When tested as specified in 4.7.18, capacitors shall meet the following requirements:

Step 1 (+25°C):
DC leakage: Shall not exceed the applicable value specified (see 3.1).
Capacitance: Shall be within the applicable tolerance specified (see 3.1).
Dissipation factor: Shall not exceed the applicable value specified (see 3.1).

Step 2 (-55°C):
Impedance: Shall not exceed the applicable value specified (see 3.1).
Capacitance: Shall change not more than the percent specified (see 3.1) from the step 1 measured value.

Step 3 (+25°C):
DC leakage: Shall not exceed the applicable value specified (see 3.1).
Capacitance: Shall change not more than the percent specified (see 3.1) from the step 1 measured value.
Dissipation factor: Shall not exceed the applicable value specified (see 3.1).

Step 4 (+85°C):
DC leakage: Shall not exceed the applicable value specified (see 3.1).
Capacitance: Shall change not more than the percent specified (see 3.1) from the step 1 measured value.
Dissipation factor: Shall not exceed the applicable value specified (see 3.1).

Step 5 (+125°C):
DC leakage: Shall not exceed the applicable value specified (see 3.1).
Capacitance: Shall change not more than the percent specified (see 3.1) from the step 1 measured value.
Dissipation factor: Shall not exceed the applicable value specified (see 3.1).

Step 6 (+25°C):
DC leakage: Shall not exceed the applicable value specified (see 3.1).
Capacitance: Shall change not more than the percent specified (see 3.1) from the step 1 measured value.
Dissipation factor: Shall not exceed the applicable value specified (see 3.1).

Source: https://assist.dla.mil -- Downloaded: 2016-11-16T17:02Z
Check the source to verify that this is the current version before use.

3.23 Reverse voltage (when specified, see 3.1). When tested as specified in 4.7.19, capacitors shall meet the following requirements:

DC leakage: Shall not exceed 125 percent of the applicable value specified (see 3.1).
Capacitance: Shall change not more than the percent specified (see 3.1) from the initial measured value (see 3.8).
Dissipation factor: Shall not exceed the applicable value specified (see 3.1).

3.24 Life at 85°C.

3.24.1 2,000-hour (qualification inspection). When tested as specified in 4.7.20.1, capacitors shall meet the following requirements:

DC leakage (at 85°C and 25°C): Shall not exceed 125 percent of the applicable value specified (see 3.1).
Capacitance: Shall change not more than the percent specified (see 3.1) from the initial measured value (see 3.8).
Dissipation factor: Shall not exceed the applicable value specified (see 3.1).
Visual examination: There shall be no damage, obliteration of marking, or leakage of electrolyte.

3.24.2 10,000-hour (group B inspection) and extended life. When tested as specified in 4.7.20.2 or 4.7.20.3, capacitors shall meet the following requirements:

DC leakage (at 85°C): Shall not exceed 125 percent of the applicable value specified (see 3.1).
DC leakage (at 25°C): Shall not exceed the applicable value specified (see 3.1).
Capacitance: Shall change not more than the percent specified (see 3.1) from the initial measured value (see 3.8).
Dissipation factor: Shall not exceed the applicable value specified (see 3.1).
Dielectric withstanding voltage (insulated capacitors only): Shall be as specified in 3.19.
Insulation resistance (insulated capacitors only): Shall be as specified in 3.20.
Visual examination: There shall be no damage, obliteration of marking, or leakage of electrolyte.

3.25 AC ripple life at 85°C (CLR79 and CLR81 only). When tested as specified in 4.7.21, capacitors shall meet the following requirements:

DC leakage: Shall not exceed the applicable value specified (see 3.1).
Capacitance: Shall not exceed the applicable value specified (see 3 1).
Dissipation factor: Shall not exceed the applicable value specified (see 3.1).
Visual Examination: There shall be no damage, obliteration of marking, or leakage of electrolyte.

3.26 Random vibration (CLR25, CLR27, CLR35, CLR37, CLR71, CLR73, CLR79, and CLR81 "H" designated units only). When capacitors are tested as specified in 4.7.22, there shall be no intermittent contacts of 0.5 millisecond (ms) or greater duration. In addition, capacitors shall meet the following requirements:

DC leakage: Shall not exceed 125 percent of the applicable value specified (see 3.1).
Capacitance: Shall change not more than ±5 percent from the initial measured value (see 3.8).
Dissipation factor: Shall not exceed 115 percent of the applicable value specified (see 3.1).
Visual examination: There shall be no evidence of harmful corrosion (as defined in 3.14), mechanical damage, obliteration of marking, or leakage of electrolyte.

3.27 Life at 125°C. When tested as specified in 4.7.23, capacitors shall meet the following requirements:

DC leakage (at 125°C and 25°C): Shall not exceed the applicable value specified (see 3.1).
Capacitance: Shall change not more than the percent specified (see 3.1) from the initial measured value (see 3.8).
Dissipation factor: Shall not exceed the applicable value specified (see 3.1).
Dielectric withstanding voltage (insulated capacitors only): Shall be as specified in 3.19.
Insulation resistance (insulated capacitors only): Shall be as specified in 3.20.
Visual examination: There shall be no damage, obliteration of marking, or leakage of electrolyte.

Source: https://assist.dla.mil -- Downloaded: 2016-11-16T17:02Z
Check the source to verify that this is the current version before use.

3.27.1 2,000-hour (group C inspection). When tested as specified in 4.7.23.1, capacitors shall meet the following requirements:

DC leakage (at 125°C): Shall not exceed 125 percent of the applicable value specified (see 3.1).
DC leakage (at 25°C): Shall not exceed the applicable value specified (see 3.1).
Capacitance: Shall change not more than the percent specified (see 3.1) from the initial measured value (see 3.8).
Dissipation factor: Shall not exceed the applicable value specified (see 3.1).
Dielectric withstanding voltage (insulated capacitors only): Shall be as specified in 3.19.
Insulation resistance (insulated capacitors only): Shall be as specified in 3.20.
Visual examination: There shall be no damage, obliteration of marking, or leakage of electrolyte.

3.28 Barometric pressure (reduced). When tested as specified in 4.7.24, there shall be no flashover, breakdown, or harmful deformation of the case, and mechanical damage, obliteration of marking, or leakage of electrolyte.

3.29 Fungus. The manufacturer shall certify that all external materials are fungus resistant or shall perform the test specified in 4.7.25. When capacitors are tested as specified in 4.7.25, examination shall disclose no evidence of fungus growth on the surface of the capacitor.

3.30 Resistance to solvents. When capacitors are tested as specified in 4.7.26, marking shall remain legible and shall not smear or rub off. In addition, there shall be no visible indication of damage or deterioration to the capacitor body.

3.31 Resistance to soldering heat. When tested as specified in 4.7.27, capacitors shall meet the following requirements:

DC leakage: Shall not exceed the applicable value specified (see 3.1).
Capacitance: Shall change not more than the percent specified (see 3.1) from the initial measured value (see 3.8).
Dissipation factor: Shall not exceed the applicable value specified (see 3.1).

3.32 Marking. Marking of capacitors shall conform to method I of MIL-STD-1285 and shall include the Part or Identifying Number (PIN), "JAN" brand, trademark, CAGE code, date code, lot symbol, capacitance (in μF), and rated voltage. Capacitors shall be marked as shown in the following example.

M39006/		
01-3001	-	Part or Identifying Number (PIN)
JAN TM	-	"JAN" brand and trademark.
12345	-	CAGE code.
9015A	-	Date code and lot symbol.
15μF 15V	-	Capacitance and rated voltage. As an option, the rated voltage may be marked on a new line under the capacitance.

Polarity marking for polarized units shall be marked as specified (see 3.1).

3.32.1 PIN. The military PIN shall consist of the letter "M", the basic number of the specification sheet, and an assigned dash number (see 3.1), as shown in the following:

M	39006/01	-3001
Military designator	Specification sheet number	Dash number

3.32.2 "JAN" and "J" marking. The United States Government has adopted, and is exercising legitimate control over, the certification marks "JAN" and "J" to indicate electrical equipment, namely, resistors, capacitors, and the like, acquired by, or manufactured for use by, or for the Government in accordance with standard Government specifications. Accordingly, capacitors acquired to and meeting all of the criteria specified herein and in applicable specification sheets shall bear the certification mark "JAN", except that capacitors too small to bear the certification mark "JAN" shall bear the letter "J". The "JAN" or "J" shall be located on the first line above or below the PIN. Capacitors furnished under contracts or orders which either permit or require deviation from the conditions or requirements specified herein and in applicable specification sheets shall not bear "JAN" or "J". In the event a capacitor sample fails to meet the requirements of this specification and the applicable specification sheet, the manufacturer shall remove the "JAN" or the "J" from the sample tested and also from all capacitors represented by the sample. The United States Government has obtained Certificate of Registration No. 504,860 for the certification mark "JAN".

Source: https://assist.dla.mil -- Downloaded: 2016-11-16T17:02Z
Check the source to verify that this is the current version before use.

3.32.3 Substitutability of failure rate levels. A manufacturer may supply to those failure rate levels, as listed in table I, which are higher than to which he is qualified. Items of an exponential FRL as shown in table I and marked to lower FRL's, with acquiring agency approval, are substitutable for higher FRL's, and shall not be remarked unless specified in the contract or purchase order (see 6.2), the lot date codes on the parts are unchanged, and the workmanship criteria is met.

TABLE I. Failure rate substitutability.

Parts qualified to failure rate level	Are substitutable for failure rate level
S	L, M, P, and R
R	L, M, and P
P	L and M
M	L

3.32.4 Substitutability of capacitance tolerance and rated voltages. Parts qualified and marked to tighter capacitance tolerance or higher rated voltage, with acquiring agency approval, are substitutable for parts marked to looser capacitance tolerance or lower rated voltage, provided all other values, such as case size, characteristic, and leads are the same. The substitutable parts shall not be remarked unless specified in the contract or purchase order (see 6.2). In the event the capacitance tolerance or voltage rating is remarked, the lot date codes on the parts shall not be changed and the workmanship criteria shall be met.

3.32.5 Non-established reliability (Non-ER) marking. An ER part manufactured in accordance with this specification may be marked and furnished as the non-ER version of a similar part in MIL-C-3965, with acquiring agency approval, provided it is produced on the same assembly line or lines, and is subjected to and meets all of the inspection requirements of the ER part.

3.33 Workmanship. Capacitors shall be processed in such a manner as to be uniform in quality when using 2X minimum to 4X maximum magnification. External leads shall not exhibit cuts, nicks, or scrapes exceeding 10 percent of the diameter for round and flat leadwire parts, except as follows:

Round leads: Within .050 inch (1.27 mm) beyond the weld area of the component, 10 percent of the surface area of the leads may exhibit bare base metal. These capacitors are not expected to be solderable within .050 inch (1.27 mm) beyond the weld area.

3.33.1 Terminals and end seals. All terminals and end seals shall be free of grease or other foreign material.

3.33.2 Insulating sleeving (when applicable). Insulating sleeving shall fit the container case in such a manner that there are no loose seams or ragged ends.

4. QUALITY ASSURANCE PROVISIONS

4.1 Responsibility for inspection. Unless otherwise specified in the contract or purchase order, the contractor is responsible for the performance of all inspection requirements (examinations and tests) as specified herein. Except as otherwise specified in the contract or purchase order, the contractor may use his own or any other facilities suitable for the performance of the inspection requirements specified herein, unless disapproved by the Government. The Government reserves the right to perform any of the inspections set forth in the specification where such inspections are deemed necessary to ensure that supplies and services conform to prescribed requirements.

4.1.1 Responsibility for compliance. All items shall meet all requirements of sections 3 and 5. The inspection set forth in this specification shall become a part of the contractor's overall inspection system or quality program. The absence of any inspection requirements in the specification shall not relieve the contractor of the responsibility of ensuring that all products or supplies submitted to the Government for acceptance comply with all requirements of the contract. Sampling inspection, as part of manufacturing operations, is an acceptable practice to ascertain conformance to requirements; however, this does not authorize submission of known defective material, either indicated or actual, nor does it commit the Government to accept defective material.

4.1.2 Reliability assurance program. A reliability assurance program shall be established and maintained in accordance with MIL-STD-790.

Source: https://assist.dla.mil -- Downloaded: 2016-11-16T17:02Z
Check the source to verify that this is the current version before use.

4.1.3 Statistical process control (SPC). An SPC program shall be established and maintained in accordance with EIA-557. Evidence of such compliance shall be verified by the qualifying activity as a prerequisite for qualification and retention of qualification.

4.2 Classification of inspections. The inspections specified herein are classified as follows:

a. Qualification inspection (see 4.4).

b. Verification of qualification (see 4.5).

c. Quality conformance inspection (see 4.6).

4.3 Inspection conditions and methods.

4.3.1 Inspection Conditions. Unless otherwise specified herein, all inspections shall be made in accordance with the test conditions specified in the "GENERAL REQUIREMENTS" of MIL-STD-202.

4.3.2 Methods.

4.3.2.1 AC measurements. AC measurements shall be made at a frequency of 120 ±5 hertz (Hz). The magnitude of the ac voltage shall be equal to or less than 1.0 volt root mean squared (rms). Except as specified in the following, the dc bias voltage shall be 2.2 +0.0, -1.0 volts for all ac measurements.

a. 5.0 +0.0, -1.0 V dc (50-volt and 75-volt capacitors, styles CLR25 and CLR71 only).

b. 10.0 +0.0, -1.0 V dc (100-volt, 125-volt, and 150-volt capacitors, styles CLR25, CLR71, CLR79, and CLR81 only).

c. At the option of the manufacturer, the dc bias voltage may be 2.2 +0.0, -1.0 V dc or 10 percent of the rated voltage +0.0, -1.0 V dc, whichever is greater, for all styles.

The ratio of ac voltage to dc bias voltage shall be such that no reversal of dc voltage will occur across the capacitor.

4.3.2.2 Reference measurements. When requirements are based on comparative measurements made before and after conditioning, the reference measurement shall be considered the last measurement made at 25°C ±5°C prior to conditioning. Unless reference measurements have been made within 30 days prior to the beginning of conditioning, they shall be repeated.

4.3.3 Power supply. The power supply used for life testing shall have a regulation of ±2 percent or less of the specified test voltage. The power supply used for dc leakage current measurements shall be stabilized to at least ±100 parts per million. No voltage fluctuations shall occur during measurements that would produce a variation in the current measurement.

4.4 Qualification inspection. Qualification inspection shall be performed at a laboratory acceptable to the Government (see 6.3), on sample units produced with equipment and procedures normally used in production. Qualification approval will be based on the successful completion of the tests specified in table II, and will not be withheld pending completion of the extended life test of 4.7.20.3.1.

4.4.1 Sample size. The number of capacitors to be subjected to qualification inspection shall be as specified in table II or in the appendix to this specification. Each capacitor style shall be qualified separately.

4.4.2 Inspection routine. The sample shall be subjected to the inspections specified in table II, in the order shown. Except as specified in table II, all sample units shall be subjected to the inspections of group I. For group II, two sample units shall be subjected to the visual and mechanical examination (internal) and the remaining sample units shall be subjected to the tests shown. These sample units shall then be divided as specified in table II for groups III through IX, and subjected to the inspections for their particular group.

4.4.3 Failures. Failures in excess of those allowed in table II shall be cause for refusal to grant qualification approval.

4.4.4 Failure rate level and quality level verification.

Source: https://assist.dla.mil -- Downloaded: 2016-11-16T17:02Z
Check the source to verify that this is the current version before use.

TABLE II. Qualification inspection

Examination or test	Requirement paragraph	Test paragraph	Number of sample units to be inspected				Number of failures allowed 1/		
			Hermetically sealed styles			Nonhermetically sealed styles	Hermetically sealed styles		Nonhermetically sealed styles
			CLR10, CLR14, CLR17	CLR79, CLR81	Other styles		CLR10, CLR14, CLR17	Other styles	
Group I 2/									
Constant voltage conditioning	3.6	4.7.2							
DC leakage	3.7	4.7.3							
Capacitance	3.8	4.7.4							
Dissipation factor	3.9	4.7.5	125	236	192	192	0	0	0
Seal, condition A or D (hermetically sealed styles)	3.10	4.7.6.1				---			
Group II									
Visual and mechanical examination (internal)	3.1, 3.4, and 3.5	4.7.1	2	2	2	2	0	0	0
Visual and mechanical examination (external) 2/									
Material	3.1, 3.4	4.7.1							
Design and construction	3.1, 3.5		123 3/	234 3/	190 3/	190 3/	1	1	1
Marking 4/	3.32								
Workmanship	3.33								
Group III									
Shock (specified pulse)	3.11	4.7.7							
Vibration, high frequency	3.12	4.7.8							
Random vibration 5/	3.26	4.7.22	4	24 6/	12	12			
Thermal shock	3.13	4.7.9							
Salt spray (corrosion)	3.14	4.7.10							

See footnotes at end of table.

Source: https://assist.dla.mil -- Downloaded: 2016-11-16T17:02Z
Check the source to verify that this is the current version before use.

TABLE II. Qualification inspection - Continued.

Examination or test	Requirement paragraph	Test paragraph	Number of sample units to be inspected				Number of failures allowed 1/		
			Hermetically sealed styles			Nonhermetically sealed styles	Hermetically sealed styles		Nonhermetically sealed styles
			CLR10, CLR14, CLR17	CLR79, CLR81	Other styles		CLR10, CLR14, CLR17	Other styles	
Group IV									
Solderability (axial-wire lead styles)	3.15	4.7.11							
Terminal strength	3.16	4.7.12							
Surge voltage	3.17	4.7.13							
Moisture resistance	3.18	4.7.14							
Dielectric withstanding voltage (insulated styles)	3.19	4.7.15	4	12	12	12			
Insulation resistance (insulated styles)	3.20	4.7.16							
Low temperature (storage)	3.21	4.7.17							
Seal, condition C (hermetically sealed styles)	3.10	4.7.6.2					1 7/	1 7/	1 7/
Group V									
Stability at low and high temperatures	3.22	4.7.18	4						
Reverse voltage (when specified, see 3.1)	3.23	4.7.19	---	12	12	12			
Group VI									
Life at 85°C (2,000 hour)	3.24.1	4.7.20.1	102	102	102	102		1	1
Group VII									
AC ripple life at 85°C (2,000 hours) (CLR79 and CLR81)	3.25	4.7.21	---	32 8/	---	---		1	---
Group VIII									
Life at 125°C	3.27	4.7.23	3	40	40	40		1	1
Barometric pressure (reduced)	3.28	4.7.24							

See footnotes at end of table.

Source: https://assist.dla.mil -- Downloaded: 2016-11-16T17:02Z
Check the source to verify that this is the current version before use.

TABLE II. Qualification inspection - Continued.

Examination or test	Requirement paragraph	Test paragraph	Number of sample units to be inspected				Number of failures allowed 1/		
			Hermetically sealed styles			Nonhermetically sealed styles	Hermetically sealed styles		Nonhermetically sealed styles
			CLR10, CLR14, CLR17	CLR79, CLR81	Other styles		CLR10, CLR14, CLR17	Other styles	
Group IX									
Fungus 9/	3.29	4.7.25	2	5	5	5			
Resistance to solvents	3.30	4.7.26	—3	—6	—6	—6	—0	—0	—0
Resistance to soldering heat	3.31	4.7.27							

1/ A sample unit having one or more defects shall be considered as a single failure.
2/ Nondestructive tests (see 30.2).
3/ One additional sample unit is included in each sample size to permit substitution for the failure allowed in group II.
4/ Marking defects are based on visual examination only and shall be charged only for illegible, incomplete, or incorrect marking.
5/ CLR25, CLR27, CLR35, CLR37, CLR71, CLR73, CLR79, and CLR81 "M" designated units only.
6/ Twenty-four units, six of each case size.
7/ No failures for mechanical shock or vibration tests are permitted.
8/ Thirty-two units, eight of each case size.
9/ Certification of fungus resistance may be substituted for testing.

Source: https://assist.dla.mil -- Downloaded: 2016-11-16T17:02Z
Check the source to verify that this is the current version before use.

4.4.4.1 FR qualification and lot conformance FR inspection. FR qualification and lot conformance FR inspection shall be in accordance with the general and detailed requirements of MIL-STD-690 and the following details:

a. Procedure I - Qualification at the initial FR level. Level M of FRSP-60 shall apply. On completion of the 2,000-hour qualification test (group VI, table II), the entire life test sample shall be continued on test as specified in 4.7.20.3.1.

b. Procedure II - Extension of qualification to lower FR levels. To extend qualification to the R and S FR levels, data from two or more voltage groups within a style and of similar construction (see 4.6.1.1) may be combined. Life test data may be combined for those styles in each group listed in 4.6.1.1.

c. Procedure III - Maintenance of FR level qualification. Maintenance period B of FRSP-10 shall apply. Regardless of the number of production lots produced during this period, the specified number of unit hours shall be accumulated to maintain qualification (see 4.5f). Life test data may be combined for those styles in each group listed in 4.6.1.1. Styles in groups I and V (see 4.6.1.1) may be combined for FR level maintenance of all levels.

d. Procedure IV - Lot conformance FR inspection. Lot conformance FR inspection shall be in accordance with 4.6.1.3.

4.4.4.2 Quality level verification. The manufacturer is responsible for establishing a quality system to verify the ppm defect level of lots that are subjected to subgroup 2 tests of the group A inspections. The ppm defect level shall be based on a 6-month moving average. The manufacturer shall verify and report individual ppm categories (i.e., ppm-2 and ppm-3) and an overall ppm defect level (i.e., ppm-5).

4.5 Verification of qualification. Every 6 months, the manufacturer shall compile a summary of the results of quality conformance inspections and extended FR test data, in the form of a verification of qualification report, and forward it to the qualifying activity within 30 days after the end of the reporting period as the basis of continued qualification approval. In addition, the manufacturer shall immediately notify the qualifying activity whenever the failure rate data indicates that the manufacturer has failed to maintain his qualified FR level. Continuation shall be based on evidence that, over the 6-month period, the following has been met:

a. The manufacturer meets the requirements of MIL-STD-790.

b. The manufacturer has not modified the design of the item.

c. The specification requirements for the item have not been amended so far as to affect the character of the item.

d. Lot rejection for group A inspection does not exceed 10 percent or one lot, whichever is greater.

e. The requirements of groups B and C inspections are met.

f. The records of all FR tests combined substantiate that the L, M, or P FR levels have been maintained or that the manufacturer continues to meet the R or S FR level for which qualified, although the total component hours of testing does not, as yet, meet the requirements of 4.4.4.1c.

g. The manufacturer shall provide documentation to the qualifying activity pertaining to ppm calculations, including numbers of part types tested, individual ppm defect categories (i.e., ppm-2 and ppm-3), and the overall ppm defect rate (ppm-5). Capacitors styles may be combined in accordance with each group listed in 4.6.1.1 for ppm calculations.

If group C test requirements were not met and the manufacturer has taken corrective action satisfactory to the Government, the forwarding of the verification of qualification report may be delayed until within 30 days after completion of retesting of the group C inspections. In this case, the qualifying activity shall be notified of this condition within the time the original verification of qualification report was due. All reports shall be certified by a responsible company official. The qualifying activity shall be contacted for the report format.

Source: https://assist.dla.mil -- Downloaded: 2016-11-16T17:02Z
Check the source to verify that this is the current version before use.

If a group C test requires a comparison of "post-test" readings with initial readings (delta measurements), the verification of qualification summary shall include the maximum and minimum delta changes for each inspection lot. For life testing, delta C readings shall be reported at each interval in which readings are taken.

Failure to submit the report within 30 days after the end of each 6-month period may result in loss of qualification for the product. In addition to the periodic submission of inspection data, the supplier shall immediately notify the qualifying activity at any time during the 6-month period that the inspection data indicates failure of the qualified product to meet the requirements of the specification.

In the event that no production occurred during the reporting period, a report shall be submitted certifying that the manufacturer still has the capabilities and facilities necessary to produce the item. The manufacturer, however, must maintain the required number of unit hours in the specified maintenance period in order to remain qualified to the applicable failure rate levels. The manufacturer must also produce enough parts during any reporting period in order to perform all applicable group C tests.

4.5.1 Records. Maintenance of life test and FR level records shall be as specified in MIL-STD-690.

4.6 Quality conformance inspection.

4.6.1 Inspection of product for delivery. Inspection of product for delivery shall consist of group A inspection and subgroup 1 of group B inspection.

4.6.1.1 Inspection lot. An inspection lot, as far as practicable, shall consist of all capacitors from the same production line or lines, produced under essentially the same conditions, and offered for inspection during a single work week. The following styles may be grouped:

a. Group I - Styles CLR25, CLR27, CLR35, CLR37, CLR71, and CLR73 (elastomer seals).

b. Group II - Styles CLR65 and CLR69.

c. Group III - Styles CLR10, CLR14, and CLR17.

d. Group IV - Styles CLR79 and CLR81.

e. Group V - Styles CLR25, CLR27, CLR35, CLR37, CLR71, and CLR73 (hermetic seals).

4.6.1.2 Production lot. A production lot shall consist of all capacitors of the same style, voltage rating, nominal capacitance value, and termination finish. Manufacture of all parts in the lot shall have been started, processed, assembled, and tested as a group. Lot identity shall be maintained throughout the manufacturing cycle.

4.6.1.3 Group A inspection. Group A inspection shall consist of the examinations and tests specified in table III, in the order shown.

4.6.1.3.1 Subgroup 1 tests. The subgroup 1 tests shall be performed on a production lot basis on 100 percent of the product supplied under this specification. Capacitors failing the tests of subgroup 1 shall be removed from the lot. If, during the 100 percent inspection, screening requires that more than 5 percent of the capacitors be discarded, the entire production lot shall be rejected.

Source: https://assist.dla.mil -- Downloaded: 2016-11-16T17:02Z
Check the source to verify that this is the current version before use.

TABLE III. Group A inspection.

Inspection	Requirement paragraph	Test paragraph	Sampling procedure
Subgroup 1			
Constant voltage conditioning	3.6	4.7.2	-100% inspection
DC leakage	3.7	4.7.3	
Capacitance	3.8	4.7.4	
Dissipation factor	3.9	4.7.5	
Seal, condition A or D (hermetically-sealed styles)	3.10	4.7.6.1	
Subgroup 2 (ppm) 1/			-See table IV
DC leakage (ppm-2)	3.7	4.7.3	
Capacitance (ppm-2)	3.8	4.7.4	
Dissipation factor (ppm-2)	3.9	4.7.5	
Mechanical examination design and construction (ppm-3)	3.5	4.7.1	
Seal, condition A or D (hermetically-sealed styles) (ppm-4)	3.10	4.7.6.1	
Subgroup 3			
Solderability	3.15	4.7.11	13 samples 0 failures
Subgroup 4			
Visual examination		4.7.1	13 samples 2/ 0 failures
Material	3.1, 3.4, 3.4.1	4.7.1	
Marking	3.32	4.7.1	
Workmanship	3.33	4.7.1	

1/ Not applicable for styles which are inactive for new design.
2/ These samples may be the same samples used in the subgroup 3 solderability test, provided they are not electrical rejects.

TABLE IV. Sampling plans for ppm categories.

Lot size	Sample size
1 - 125	100 percent
126 - 3,200	125 units
3,201 - 10,000	192
10,001 - 150,000	294
150,001 - 500,000	345
500,001 - up	435

4.6.1.3.1.1 Manufacturer's production inspection. If the manufacturer performs tests equal to or more stringent than those specified in subgroup 1 of table III, as the final step of his production process, group A, subgroup 1 inspection may be waived and the data resulting from the manufacturer's production test may be used instead. Authority to waive the subgroup 1 inspections shall be granted by the qualifying activity only. The following criteria shall be complied with:

a. Tests conducted by the manufacturer during production shall be clearly identical to or more stringent than those specified for subgroup 1. Test conditions shall be equal to or more stringent than those specified for subgroup 1 tests.

b. Manufacturer subjects 100 percent of the product supplied under this specification to his production tests.

Source: https://assist.dla.mil -- Downloaded: 2016-11-16T17:02Z
Check the source to verify that this is the current version before use.

c. The parameters measured and the failure criteria shall be the same as, or more stringent than, those specified herein.

d. The lot rejection criteria is the same as, or more stringent than, those specified herein.

e. The manufacturer shall make available all information concerning the test procedures and instrumentation used in his production tests. This data shall be provided as part of the evaluation required for MIL-STD-790. The manufacturer shall also make available to the Government all records of all detail test data resulting from production tests.

f. Once approved, the manufacturer shall not change the test procedures or criteria without prior notification and concurrence by the qualifying activity.

4.6.1.3.2 Subgroup 2 tests (ppm categories).

4.6.1.3.2.1 Sampling plans. Subgroup 2 tests shall be performed on an inspection lot basis. Samples subjected to subgroup 2 shall be selected in accordance with table IV based on the size of the inspection lot. In the event of 1 or more failures the lot shall be rejected. It is recommended that equipment and operators used to perform the subgroup 2 tests shall not be the same as those used in the subgroup 1, 100 percent tests for optimum verification.

4.6.1.3.2.2 Rejected lots. The rejected lot shall be segregated from new lots and those lots that have passed inspection. The rejected lot shall be 100 percent inspected for those quality characteristics found defective in the sample and any defectives found removed from the lot. A new sample of parts shall then be randomly selected in accordance with table IV. If one or more defects are found in this second sample, the lot shall be rejected and shall not be supplied to the specification.

4.6.1.3.2.3 PPM calculations. PPM calculations shall be based on the results of the first sample check as prescribed in 4.6.1.3.2.1. Calculations and data exclusion shall be in accordance with EIA-554.

Note: PPM calculations shall not use data on the second sample submission.

4.6.1.3.3 Subgroup 3 (solderability).

4.6.1.3.3.1 Sampling plan. Thirteen samples shall be selected randomly from each inspection lot and subjected to the solderability test. The manufacturer may use electrical rejects from the subgroup 1 screening tests for all or part of the samples to be used for solderability testing. If there are one or more defects, the lot shall be considered to have failed.

4.6.1.3.3.2 Rejected lots. In the event of one or more defects, the inspection lot shall be rejected. The manufacturer may rework the lot as follows: Each production lot that was used to form the failed inspection lot shall be individually submitted to the solderability test as required in 4.6.1.3.3.1. Production lots that pass the solderability test are available for shipment. Production lots failing the solderability test can be reworked only if submitted to the solder dip procedure in 3.5.3.3.

4.6.1.3.3.3 Disposition of samples. Samples subjected to the solderability test may be delivered on the contract if they pass the group A, subgroup 4 tests.

4.6.1.3.4 Subgroup 4. Subgroup 4 shall be performed on an inspection basis. Sampling inspection shall be in accordance with table III.

4.6.1.3.4.1 Rejected lots. The rejected lot shall be segregated from new lots and those lots that have passed inspection. Lots rejected because of failures in subgroup 4 may be offered for acceptance only if the manufacturer inspects all units in the lot for those quality characteristics found defective in the sample and, after removing all defective units found, reinspects the lot using the sampling procedure specified in table III. If one or more defects are found in the second sample, the lot shall be rejected and shall not be supplied to this specification. Resubmitted lots shall be kept separate from new lots, and shall be identified as resubmitted lots.

4.6.1.4 Group B inspection. Group B inspection for all FR levels shall consist of the tests specified in table V, in the order shown, and shall be performed on sample units which have been subjected to and have passed the applicable tests of group A inspection.

4.6.1.4.1 Sampling plan. For subgroup 1, 13 sample units shall be selected at random from each inspection lot. For subgroup 2, a minimum of 10 sample units shall be selected at random from each inspection lot and shall be inspected as specified. Units selected for subgroup 2 may be subjected to specified test before 1 month has elapsed.

Source: https://assist.dla.mil -- Downloaded: 2016-11-16T17:02Z
Check the source to verify that this is the current version before use.

TABLE V. Group B inspection.

Test	Requirement paragraph	Test paragraph	Sampling procedure
Subgroup 1			
Stability at low and high temperatures	3.22	4.7.18	13 samples 0 failures
Subgroup 2			
Thermal shock	3.13	4.7.9	10 samples 0 failures
Life (10,000-hour at 85°C) 1/	3.24.2	4.7.20.2	

1/ Unit hours generated shall be used for FR level computation.

4.6.1.4.2 Disposition of sample units. Sample units which have been subjected to group B inspection shall not be delivered on the contract.

4.6.1.4.3 Failure in group B inspection.

4.6.1.4.3.1 Subgroup 1. If an inspection lot is rejected as a result of failure to pass the subgroup 1 inspection, the individual production lot, or lots, which produced the failures shall be identified and kept separate from other lots, and shall be subjected to 100 percent inspection for those characteristics found defective.

4.6.1.4.3.2 Subgroup 2. If an inspection lot is rejected as a result of failure to pass the subgroup 2 inspection, the inspection lot shall not be resubmitted. Even though the lot has been rejected, those units which were predesignated for extended life testing shall remain or be placed on test for the full length of time.

4.6.2 Periodic inspection. Periodic inspection shall consist of group C inspection. Delivery of products which have passed group A and B inspections shall not be delayed pending the results of periodic inspection.

4.6.2.1 Group C inspection. Group C inspection shall be performed on sample units which have been subjected to and have passed the applicable tests for group A inspection and shall consist of the tests specified in table VI, in the order shown. Test data shall be reviewed as part of the complete verification of qualification.

Source: https://assist.dla.mil -- Downloaded: 2016-11-16T17:02Z
Check the source to verify that this is the current version before use.

TABLE VI. Group C inspection.

Test	Requirement paragraph	Test paragraph	Number of sample units to be inspected	Number of failures allowed 1/
Subgroup 1 (every 2 months)				
Shock (specified pulse)	3.11	4.7.7	12	1
Vibration, high frequency	3.12	4.7.8		
Random vibration 2/	3.26	4.7.22		
Salt spray (corrosion)	3.14	4.7.10		
Subgroup 2 (every 2 months)				
Terminal strength	3.16	4.7.12	12	
Surge voltage	3.17	4.7.13		
Moisture resistance	3.18	4.7.14		
Dielectric withstanding voltage (insulated styles)	3.19	4.7.15		
Insulation resistance (insulated styles)	3.20	4.7.16		
Seal, condition C (hermetically sealed styles)	3.10	4.7.6.2		
Subgroup 3 (every 2 months)				
Reverse voltage (when specified, see 3.1)	3.23	4.7.19	12	
Subgroup 4 (CLR79 and CLR81 only) (every 12 months)				
AC ripple life at 85°C	3.25	4.7.21	32 3/	1
Subgroup 5 (every 2 months)				
Low temperature (storage)	3.21	4.7.17	12	1
Subgroup 6 (every 12 months)				
Resistance to solvents	3.30	4.7.26	6	1
Resistance to soldering heat	3.31	4.7.27		
Barometric pressure (reduced)	3.28	4.7.24		
Subgroup 7 (CLR79 and CLR81 only) (every 12 months)				
Thermal shock	3.13	4.7.9	24 4/	1
Subgroup 8 (every month)				
Thermal shock	3.13	4.7.9	10	0
Life (2,000-hour at 125°C)	3.27.1	4.7.23.1	10	1

1/ A sample having one or more defects shall be considered as a single failure.
2/ CLR25, CLR27, CLR35, CLR37, CLR71, CLR73, CLR79, and CLR81 "H" designated units only.
3/ Thirty-two units, eight of each case size.
4/ Twenty-four units, six of each case size.

4.6.2.1.1 Sampling plan. Sample units shall be taken from production every 2 months for subgroups 1, 2, 3, and 5, every 12 months for subgroups 4, 6, and 7, and every month for subgroup 8. Styles shall be combined in accordance with the groups listed in 4.6.1.1. The voltages selected shall be represented in the sample in the same proportion as the voltages produced during the sampling period. The maximum and minimum case sizes manufactured during those months shall be represented in at least the approximate ratio of production, except for subgroup 1. The sample for subgroup 1 shall be composed of a minimum of three pieces of any one case size, and all case sizes produced in a 12-month period shall receive subgroup 1 testing at least once during that 12-month period. Allowable failures shall be as specified in table VI.

4.6.2.1.2 Failures. If the number of failures exceeds the number allowed in table VI, the sample shall be considered to have failed.

Source: https://assist.dla.mil -- Downloaded: 2016-11-16T17:02Z
Check the source to verify that this is the current version before use.

4.6.2.1.3 Disposition of sample units. Sample units which have been subjected to group C inspection shall not be delivered on the contract order.

4.6.2.1.4 Noncompliance. If a sample fails to pass group C inspection, the manufacturer shall notify the qualifying activity and cognizant inspection activity of such failure and take corrective action on the materials or processes, or both as warranted, and on all units of product which can be corrected and which are manufactured with essentially the same materials and under the same processes, and which are considered subject to the same failure. Acceptance and shipment of the product shall be discontinued until corrective action acceptable to the qualifying activity has been taken. After the corrective action has been taken, group C inspection shall be repeated on additional sample units (all inspections, or the inspection which the original sample failed, at the option of the qualifying activity). Groups A and B inspections may be reinstituted; however, final acceptance and shipment shall be withheld until the group C inspection has shown that the corrective action was successful. In the event of failure after reinspection, information concerning the failure shall be furnished to the cognizant inspection activity and the qualifying activity.

4.6.3 Inspection of packaging. The sampling and inspection of the preservation, packing, and container marking shall be in accordance with the requirements of MIL-C-39028.

4.7 Method of inspection.

4.7.1 Visual and mechanical examination. Capacitors shall be examined to verify that the materials, design, construction, physical dimensions, marking, and workmanship are in accordance with the applicable requirements (see 3.1, 3.4, 3.5, 3.32, and 3.33).

CAUTION: Care should be used in opening and handling these capacitors during the internal examination, since some of the electrolytes used are dangerous and may cause harm to person or property (equipment).

4.7.2 Constant voltage conditioning (see 3.6). Capacitors shall be conditioned at 85°C with the applicable rated voltage applied through a 1,100 ohm (maximum) resistor for a period of 48 +5, -0 hours. Capacitors shall be returned to room ambient temperature and shall then be visually examined for mechanical damage and leakage of electrolyte.

NOTE: For nonpolarized capacitors, the conditioning voltage shall be reversed periodically so that the time of application of applicable voltage in both directions is approximately equal.

4.7.3 DC leakage (see 3.7). DC leakage shall be measured with the dc rated voltage applied. The electrification period shall be as follows:

a. For qualification inspection: 5 ±½ minutes.

b. For quality conformance inspection: Within 5 minutes.

For nonpolarized capacitors, measurements shall be made in both directions.

NOTE: DC leakage shall always be the first measurement when dc leakage, capacitance, and dissipation factor measurements are made concurrently.

4.7.4 Capacitance (see 3.8). Capacitors shall be tested in accordance with method 305 of MIL-STD-202. The following details shall apply:

a. Test frequency: As specified in 4.3.2.1.

b. Limit of accuracy: Within ±2 percent.

c. Magnitude of polarizing voltage: As specified in 4.3.2.1.

4.7.5 Dissipation factor (see 3.9). The dissipation factor shall be determined by a polarized bridge. Measurement accuracy shall be within ±2 percent. The test frequency and the magnitude of polarizing voltage shall be as specified in 4.3.2.1.

4.7.6 Seal (hermetically-sealed capacitors only, see 3.l) (see 3.10). Capacitors shall be tested in accordance with method 112 of MIL-STD-202. When applicable, this test may be performed prior to the addition of the sleeving.

4.7.6.1 Test condition A or D. Capacitors shall be tested in accordance with test condition A or D. No measurement is required after testing.

Source: https://assist.dla.mil -- Downloaded: 2016-11-16T17:02Z
Check the source to verify that this is the current version before use.

4.7.6.2 Test condition C. Capacitors shall be tested in accordance with test condition C. The following details shall apply:

a. Procedure number and degree of leakage-rate sensitivity: Procedure III, 10^{-8} atm cc/s. On completion of this procedure, test condition A shall be used for checking gross leak.

b. Measurements after test: Not applicable.

Following this test, capacitors shall be visually examined for evidence of leakage.

4.7.7 Shock (specified pulse) (see 3.11). Capacitors shall be tested in accordance with method 213 of MIL-STD-202. The following details and exceptions shall apply:

a. Special mounting means: Styles CLR14 and CLR17 capacitors shall be securely fastened by normal mounting means. Capacitors with axial-wire lead terminals shall be rigidly mounted on a mounting fixture by the body with their terminals secured to rigidly supported stud-terminals, so spaced that the length of each terminal from the capacitor is approximately .375 inch (9.52 mm) when measured from the edge of the supporting stud-terminal. Capacitor terminals shall be within 30 degrees of being parallel. When securing capacitor terminals, care shall be taken to avoid pinching the capacitor terminals.

b. Test condition letter: I (100 g's), or D (500 g's) for CLR79 and CLR81 "H" designated units.

c. Measurement and electrical loading during shock: DC rated voltage shall be applied to the capacitor during the test. Observations shall be made to determine intermittent contacts or arcing, or open- or short-circuiting. Detecting equipment shall be sufficiently sensitive to detect any interruption of 0.5 ms or greater duration.

d. Examination after test: Capacitors shall be visually examined for evidence of arcing, breakdown, mechanical damage, and leakage of electrolyte.

4.7.8 Vibration, high frequency (see 3.12). Capacitors shall be tested in accordance with method 204 of MIL-STD-202. The following details and exceptions shall apply:

a. Mounting of specimens: The body of the capacitor shall be rigidly mounted to the vibration test apparatus.

b. Test condition letter: D (20 g's), as specified (see 3.1) or H (80 g's) for CLR79 and CLR81 "H" designated units. The motion shall be applied for a total of 8 hours (4 hours in each of two mutually perpendicular directions, one parallel to and the other perpendicular to the cylindrical axis).

c. Measurements: During the last 30 minutes of vibration in each direction, an electrical measurement shall be made on the capacitors to determine intermittent contacts or open- or short-circuiting. Detecting equipment shall be sufficiently sensitive to detect any interruption of 0.5 ms or greater duration. Capacitors shall be returned to the inspection conditions specified in 4.3.1, and the dc leakage, capacitance, and dissipation factor shall be measured as specified in 4.7.3, 4.7.4, and 4.7.5, respectively.

d. Examination after test: Capacitors shall be visually examined for mechanical damage and leakage of electrolyte.

4.7.9 Thermal shock (see 3.13). Capacitors shall be tested in accordance with method 107 of MIL-STD-202. The following details and exceptions shall apply:

a. Conditioning prior to first cycle: 15 minutes at room ambient conditions (see 4.3.1).

b. Test condition letter: A, except step 3 shall be +125° +4°, -0°C.

c. Number of cycles: 30. CLR79 and CLR81 only: 300 cycles, qualification and group C; 30 cycles for group B.

d. Measurements before cycling: Not applicable.

Source: https://assist.dla.mil -- Downloaded: 2016-11-16T17:02Z
Check the source to verify that this is the current version before use.

e. Measurements after cycling: DC leakage, capacitance, and dissipation factor shall be measured as specified in 4.7.3, 4.7.4, and 4.7.5, respectively. In addition, capacitors shall be externally examined for leakage of electrolyte. Detection of leakage of electrolyte shall be determined by the use of Thymol blue, or other suitable chemical indicator solution.

4.7.10 Salt spray (corrosion) (see 3.14). Capacitors shall be tested in accordance with method 101 of MIL-STD-202. The following details and exceptions shall apply:

a. Applicable salt solution: Five percent.

b. Test condition letter: B (48 hours).

c. Measurements after tests: Not applicable.

d. Examination after tests: After the test, the capacitors shall be washed and then air-dried for 24 hours. The capacitors shall then be examined for evidence of harmful corrosion, loss of plating, unwrapping of or mechanical damage to the insulating sleeving (when applicable), and legibility of marking.

4.7.11 Solderability (capacitors with axial-wire lead terminals only, see 3.1) (see 3.15). Capacitors shall be tested in accordance with method 208 of MIL-STD-202. The following details shall apply:

a. Number of terminations of each part to be tested: 2.

b. Depth of immersion: Terminals shall be immersed up to .062 inch (1.57 mm) of the welded joint or up to .156 inch (3.96 mm) of the body, whichever applies.

4.7.12 Terminal strength (see 3.16). All capacitors shall be tested in accordance with 4.7.12.1 and the capacitors with solder-lug terminals which show visible bending during the pull test shall be tested in accordance with 4.7.12.2; capacitors with axial-wire lead terminals shall be tested in accordance with 4.7.12.3. After the tests, the terminals, terminal weld or solder, and seals shall be examined for loosening or permanent damage.

4.7.12.1 Pull test. Capacitors shall be tested in accordance with method 211 of MIL-STD-202. The following details and exception shall apply:

a. Test condition letter: A.

b. Applied force: 3 pounds +2, -0 ounces (1.4 +0.1, -0 kg) for capacitors with axial terminals and 5 pounds +3, -0 ounces (2.3 +0.1, -0 kg) for capacitors with solder-lug terminals.

c. Duration of applied force: 30 +5, -0 seconds.

4.7.12.2 Bend test. Capacitors shall be tested in accordance with method 211 of MIL-STD-202. The following detail and exception shall apply:

a. Test condition letter: B.

b. Number of bends: Four.

4.7.12.3 Wire-lead bend test. The terminal shall be inserted into the hole of the test block fixture and the wingnut shall be tightened (see figure 1). There shall be a minimum of .188 inch (4.78 mm) but not more than .313 inch (7.95 mm) of terminal length between the test block fixture and the end of the case (for terminals with welds more than .188 inch (4.78 mm) from the end of the case, the bottom of the weld shall be flush with the test block fixture). With the fixture firmly supported in a horizontal position, the case shall be forced over in such a manner that the terminal (from the end of the fixture case) is maintained in its axial position as closely as practicable while bending the terminal until the end of the case touches the top surface of the fixture. When the case is returned to the starting position, one complete bend of the test will have been completed. The second bend shall be completed in the same manner as the first except that it shall be in the reverse direction. Succeeding bends shall alternate in direction similar to the first and second bends. All terminals shall be subjected to four bends. The rate of bend shall be approximately 5 seconds per bend.

Source: https://assist.dla.mil -- Downloaded: 2016-11-16T17:02Z
Check the source to verify that this is the current version before use.

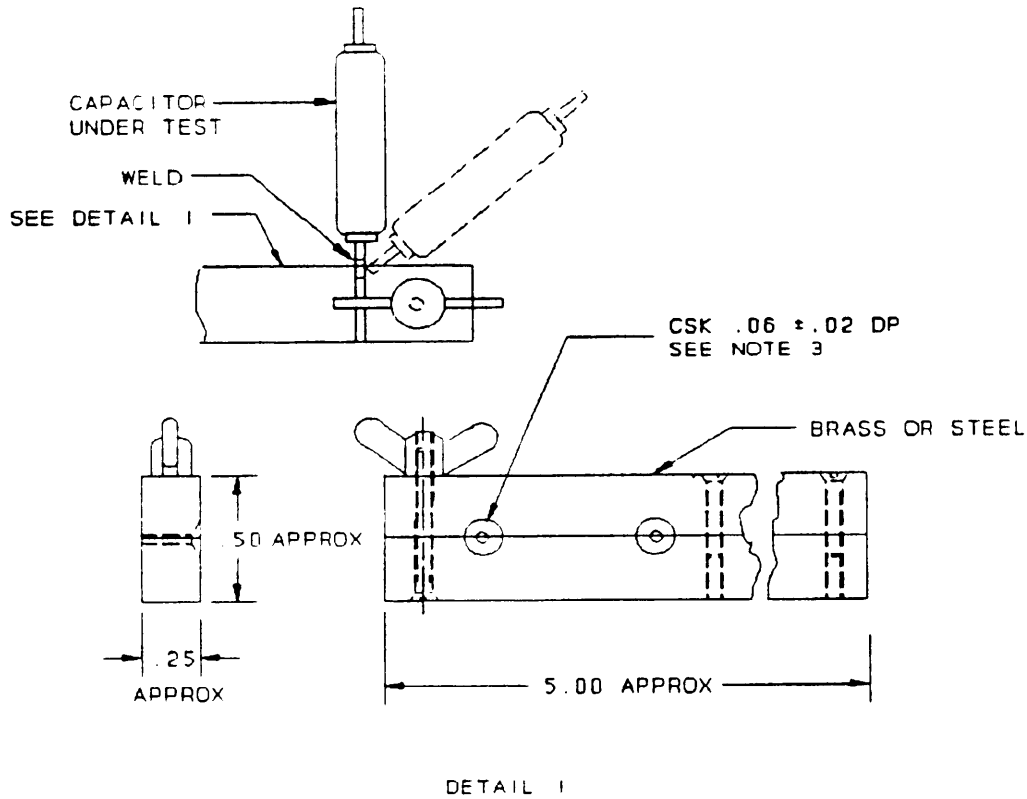

Inches	mm
.001	0.03
.02	0.5
.06	1.5
.25	6.4
.50	12.7
5.00	127.0

NOTES:
1. Dimensions are in inches.
2. Metric equivalents are given for general information only.
3. The diameter of the hole shall be .001 inch less than the diameter of the lead wire (see 3.1).

FIGURE 1. Test block fixture for wire-lead bend test.

4.7.13 Surge voltage (see 3.17). Capacitors shall be subjected to 1,000 cycles of the applicable dc surge voltage specified (see 3.1). The ambient temperature during cycling shall be 85°C. Each cycle shall consist of a 30-second surge voltage application followed by a 5-½ minute discharge period. Voltage application shall be made through a resistance of 1,000 ±100 ohms including the source in series with the capacitor. Each surge voltage cycle shall be performed in such a manner that the capacitor is discharged through the 1,000-ohm resistor at the end of the 30-second application. The test shall be terminated on the discharge portion of the cycle. During the test, an electrical measurement shall be made to detect intermittent contacts or open- or short-circuiting. After the test, capacitors shall be visually examined for mechanical damage and leakage of electrolyte.

Source: https://assist.dla.mil -- Downloaded: 2016-11-16T17:02Z
Check the source to verify that this is the current version before use.

4.7.14 Moisture resistance (see 3.18). Capacitors shall be tested in accordance with method 106 of MIL-STD-202. The following details and exceptions shall apply:

a. Mounting: Except during examination and measurements, capacitors shall be securely fastened by normal mounting means.

b. Polarization and loading voltages: 6 volts dc.

c. Step 7b: Vibration is not required during step 7b.

d. Final measurements: After the final cycle and within 2 to 6 hours after removal of the capacitors from the humidity chamber, the dc leakage, capacitance, and dissipation factor shall be measured as specified in 4.7.3, 4.7.4, and 4.7.5, respectively, at the inspection conditions specified in 4.3.1.

e. Examination after test: Capacitors shall be visually examined for evidence of harmful corrosion, mechanical damage, obliteration of marking, and leakage of electrolyte.

4.7.15 Dielectric withstanding voltage (insulated capacitors only, see 3.1) (see 3.19). Capacitors shall be tested in accordance with method 301 of MIL-STD-202. The following detail and exceptions shall apply:

a. Magnitude and nature of test voltage: 2,000 V dc.

b. Points of application of test voltage: Between the capacitor case and a fixture which will provide intimate contact with 70 to 80 percent of the capacitor body length, with the fixture (foil or otherwise) centered on the body length.

c. Examination after test: Sleeving shall be examined for evidence of breakdown.

4.7.16 Insulation resistance (insulated capacitors only, see 3.1) (see 3.20). Capacitors shall be tested in accordance with method 302 of MIL-STD-202. The following details and exception shall apply:

a. Test condition letter: B (500 V dc ±10 percent).

b. Points of measurement: Between the capacitor case and a V-block in intimate contact with the sleeving.

c. Electrification time: 1 minute +0, -15 seconds.

4.7.17 Low temperature (storage) (see 3.21). Capacitors shall be tested in accordance with method 502 of MIL-STD-810. The following details and exceptions shall apply:

a. Storage temperature: -62°C +0°C, -3°C.

b. Exposure time: 72 hours followed by a 1-hour exposure at +125°C +4°C, -0°C within 24 hours after low temperature storage.

c. Measurements after exposure: Capacitors shall be returned to inspection conditions specified in 4.3.1 and, within 24 hours after exposure, dc leakage, capacitance, and dissipation factor shall be measured as specified in 4.7.3, 4.7.4, and 4.7.5, respectively.

d. Examination after test: Capacitors shall be externally examined for leakage of electrolyte. Detection of leakage of electrolyte shall be determined by the use of Thymol blue, or other suitable chemical-indicator solution.

4.7.18 Stability at low and high temperatures (see 3.22). The measurements specified in table VII shall be made in the order shown. The capacitors shall be brought to thermal stability. Thermal stability will have been reached when no further change in capacitance is observed between two successive measurements taken at 15-minute intervals.

Source: https://assist.dla.mil -- Downloaded: 2016-11-16T17:02Z
Check the source to verify that this is the current version before use.

TABLE VII. Temperatures and measurements for stability tests at low and high temperatures.

Step	Temperature	Measurement	Test paragraph
1	+25°C	DC leakage Capacitance Dissipation factor	4.7.3 4.7.4 4.7.5
2	-55°C +0°C, -3°C	Impedance Capacitance	4.7.18.1 4.7.4
3	+25°C	DC leakage Capacitance Dissipation factor	4.7.3 4.7.4 4.7.5
4	+85°C +3°C, -0°C	DC leakage Capacitance Dissipation factor	4.7.3 4.7.4 4.7.5
5	+125°C +4°C, -0°C	DC leakage 1/ Capacitance Dissipation factor	4.7.3 4.7.4 4.7.5
6	+25°C	DC leakage Capacitance Dissipation factor	4.7.3 4.7.4 4.7.5

1/ During the measurement, derated voltage (see 3.1) shall be applied.

4.7.18.1 Impedance. The capacitor shall be conditioned at -55°C +0°C, -3°C for a period of not less than 30 minutes or until stable measurements can be obtained. The impedance shall then be measured directly or determined from measurements obtained on a bridge. Measurements shall be made at 120 ±5 Hz. Measurement accuracy shall be within ±5 percent.

4.7.19 Reverse voltage (when specified, see 3.1) (see 3.23). Capacitors shall be subjected to a dc potential of 3 volts, applied in the reverse polarity direction, for 125 ±10 hours. The ambient temperature during the test shall be 85°C. Capacitors shall be maintained at 85°C and dc rated voltage shall be applied in the forward polarity direction for an additional period of 125 ±10 hours. Capacitors shall then be returned to room ambient temperature and the dc leakage, capacitance, and dissipation factor shall be measured as specified in 4.7.3, 4.7.4, and 4.7.5, respectively.

4.7.20 Life at 85°C (see 3.24).

4.7.20.1 2,000-hour (qualification inspection) (see 3.24.1). Capacitors shall be tested in accordance with method 108 of MIL-STD-202. The following details and exceptions shall apply:

a. Distance of temperature measurements from specimens, in inches: Not applicable.

b. Method of mounting: Styles CLR14 and CLR17 capacitors shall be mounted by normal mounting means. Other style capacitors shall be mounted by their terminals.

c. Test temperature and tolerance: 85°C +3°C, -0°C.

d. Operating conditions: DC rated voltage (see 3.1) shall be applied gradually (not to exceed 5 minutes either by a slow build-up of the voltage or through a resistor which shall be shorted out within 5 minutes). Voltage shall be applied continuously except for measurement periods. The impedance of the voltage source, as seen from the terminals of each capacitor, shall not exceed 10 ohms. Storage batteries, or an electronic power supply capable of supplying at least 100 milliamperes when a capacitor is shorted out, shall be used. For nonpolarized capacitors, the voltage shall be reversed every 125 ±10 hours.

e. Test-condition letter: F (2,000 +72, -0 hours).

f. Measurements after exposure (at 85°C): DC leakage shall be measured as specified in 4.7.3 during the first hour of exposure and then at 240 +48, -0 hours; 1,000 +48, -0 hours; and 2,000 +72, -0 hours.

Source: https://assist.dla.mil -- Downloaded: 2016-11-16T17:02Z
Check the source to verify that this is the current version before use.

g. Measurements after exposure: Capacitors shall be returned to the inspection conditions specified in 4.3.1, and dc leakage, capacitance, and dissipation factor shall be measured as specified in 4.7.3, 4.7.4, and 4.7.5, respectively.

h. Examination after test: Capacitors shall be visually examined for damage, obliteration of marking, and leakage of electrolyte.

i. The capacitors shall then be continued on life test in accordance with 4.7.20.3.

4.7.20.2 10,000-hour (group B inspection) (see 3.24.2). Except as specified in the following, capacitors shall be tested in accordance with 4.7.20.1:

a. Test duration: 10,000 +96, -0 hours.

b. Measurements during exposure: DC leakage shall be measured during the first hour of exposure and then at 240 +48, -0 hours; 2,000 +72, -0 hours; and every 2,000 +72, -0 hours thereafter until 10,000 +96, -0 hours have elapsed. At the completion of 6,000 hours, capacitors shall be returned to the inspection conditions specified in 4.3.1, and dc leakage, capacitance, and dissipation factor shall be measured as specified in 4.7.3, 4.7.4, and 4.7.5, respectively.

c. Measurements after exposure: In addition to the measurements specified in 4.7.20.1g, the dielectric withstanding voltage and insulation resistance shall be measured on insulated capacitors as specified in 4.7.15 and 4.7.16, respectively.

4.7.20.3 Extended life (following 2,000-hour qualification inspection) (see 3.24.2). Sample units which have been subjected to 2,000 hours of life test as specified in 4.7.20.1, shall remain on test for an additional 8,000 +96, -0 hours. DC leakage shall be measured during exposure after every 2,000 +72, -0 hours until 10,000 +96, -0 hours have elapsed. After completion of the 10,000-hour life test time, the dielectric withstanding voltage and insulation resistance shall be measured on insulated capacitors as specified in 4.7.15 and 4.7.16, respectively.

4.7.21 AC ripple life at 85°C (CLR79 and CLR81 only) (see 3.25). Capacitors shall be tested in accordance with method 108 of MIL-STD-202. The following details and exceptions shall apply:

a. Distance of temperature measurements from specimens, in inches: Not applicable.

b. Method of mounting: Capacitors shall be mounted by normal mounting means.

c. Test temperature: 85°C +3°C, -0°C.

d. Operating conditions: DC voltage (see 3.1) shall be applied gradually (not to exceed 5 minutes either by a slow build-up of the voltage or through a resistor which shall be shorted out within 5 minutes). The rated ripple current at 40 +2 kHz (see 3.1) shall also be applied. The impedance of the voltage source, as seen from the terminals of each capacitor, shall not exceed 10 ohms. Storage batteries, or an electronic power supply capable of supplying at least 100 milliamperes when a capacitor is shorted out, shall be used.

e. Test condition letter: F (2,000 +72, -0 hours).

f. Measurements before and after exposure: DC leakage, capacitance, and dissipation factor shall be measured as specified in 4.7.3, 4.7.4, and 4.7.5, respectively.

g. Examination after test: Capacitors shall be visually examined for damage, obliteration of marking, and leakage of electrolyte.

4.7.22 Random vibration (CLR25, CLR27, CLR35, CLR37, CLR71, CLR73, CLR79, and CLR81 "H" designated units only) (see 3.26). Capacitors shall be tested in accordance with method 214 of MIL-STD-202. The following details and exceptions shall apply:

a. Mounting of specimens: The body of the capacitor shall be rigidly mounted to the vibration test apparatus.

b. Test conditions: Styles CLR79 and CLR81 "H" designated units: Test condition: IIK. The test shall be conducted for 1 ½ hours in each of three mutually perpendicular directions.

Source: https://assist.dla.mil -- Downloaded: 2016-11-16T17:02Z
Check the source to verify that this is the current version before use.

c. Styles CLR25, CLR27, CLR35, CLR37, CLR71, and CLR73 "H" designated units: Test condition: IIE. The test shall be conducted for 1 ½ hours in each of two mutually perpendicular directions, one parallel and the other perpendicular to the cylindrical axis.

d. Measurements: During the last 30 minutes of vibration in each direction, an electrical measurement shall be made on the capacitors to determine intermittent open- or short-circuiting. Detecting equipment shall be sufficiently sensitive to detect any interruption of 0.5 ms or greater duration. Capacitors shall be returned to the inspection conditions specified in 4.3.1, and the dc leakage, capacitance, and dissipation factor shall be measured as specified in 4.7.3, 4.7.4, and 4.7.5, respectively.

e. Examination after test: Capacitors shall be visually examined for harmful corrosion, mechanical damage, obliteration of marking, and leakage of electrolyte.

4.7.23 Life at 125°C (see 3.27). Except as specified in the following, capacitors shall be tested in accordance with 4.7.20.1:

a. Test temperature and tolerance: 125°C +4°C, -0°C.

b. Operating conditions: Derated voltage (see 3.1) shall be applied.

c. Measurements after exposure: In addition to the measurements specified in 4.7.20.1g, the dielectric withstanding voltage and insulation resistance shall be measured on insulated capacitors as specified in 4.7.15 and 4.7.16, respectively.

4.7.23.1 2,000-hour (group C inspection) (see 3.27.1). Except as specified in the following, capacitors shall be tested in accordance with 4.7.23:

a. Test duration: 2,000 +24, -0 hours.

b. Operating conditions: Derated voltage (see 3.1) shall be applied.

c. Measurements during exposure: DC leakage shall be measured at 125°C during the first hour of exposure and then at 240 +24, -0 hours; 1,000 +24, -0 hours; and 2,000 +24, -0 hours.

d. Measurements after exposure: DC leakage, capacitance, dissipation factor, dielectric withstanding voltage (insulated capacitors only), and insulation resistance (insulated capacitors only) shall be measured at 25°C, as specified in 4.7.3, 4.7.4, 4.7.5, 4.7.15, and 4.7.16, respectively.

4.7.24 Barometric pressure (reduced) (see 3.28). Capacitors shall be tested in accordance with method 105 of MIL-STD-202. The following details shall apply:

a. Method of mounting: By normal mounting means.

b. Test condition letter: E (150,000 feet) (45,720 m).

c. Test during subjection to reduced pressure: At the end of the conditioning period and with the capacitors still at reduced pressure, the specified voltage (see 3.1) shall be applied for 1 minute ±5 seconds.

d. Test after subjection to reduced pressure: Capacitors shall be visually examined for harmful deformation of the case, mechanical damage, obliteration of marking, leakage of electrolyte, and indications of flashover and breakdown.

e. Exposure time prior to examination: 5 minutes (minimum).

4.7.25 Fungus (see 3.29). Capacitors shall be tested in accordance with method 508 of MIL-STD-810. Pretest and post-test measurements are not required.

4.7.26 Resistance to solvents (see 3.30). Capacitors shall be tested in accordance with method 215 of MIL-STD-202. The following details shall apply:

a. Portion of specimen to be brushed: That portion on which marking is present.

b. Number of specimens to be tested: As specified in applicable inspection tables.

c. Permissible extent of damage: As specified in 3.30.

Source: https://assist.dla.mil -- Downloaded: 2016-11-16T17:02Z
Check the source to verify that this is the current version before use.

4.7.27 Resistance to soldering heat (see 3.31). Capacitors shall be tested in accordance with method 210 of MIL-STD-202. The following details and exceptions shall apply:

a. Special preparation of the specimen: Both leads shall be dipped in RMA flux (in accordance with MIL-F-14256) for 5 ±0.5 seconds and then dipped into solder. The parts shall be immersed to within .050 inch (1.27 mm) beyond the weld area.

b. Test condition: G.

c. Measurements after test: After completion of the cleaning process and following a minimum 3-hour cooling period, the dc leakage, capacitance, and dissipation factor shall be measured as specified in 4.7.3, 4.7.4, and 4.7.5, respectively.

d. Examination after test: Capacitors shall be examined for evidence of mechanical damage.

5. PACKAGING

5.1 Packaging requirements. The requirements for packaging shall be in accordance with MIL-C-39028.

6. NOTES

(This section contains information of a general or explanatory nature that may be helpful, but is not mandatory.)

6.1 Intended use. These capacitors are primarily intended for use in filter, by-pass, and energy storage applications requiring large capacitance values but where close tolerances are not an important factor and where the ac component of voltage is small compared to the dc voltage.

6.2 Ordering data. Acquisition documents should specify the following:

a. Title, number, and date of this specification.

b. Issue of DODISS to be cited in the solicitation and, if required, the specific issue of individual documents referenced (see 2.1).

c. Title, number, and date of the applicable specification sheet, and the complete PIN (see 3.1).

d. If remarking of parts is required to indicate FR level (see 3.32.3).

e. Required levels of preservation and packaging, packing, and special marking (see section 5 and 3.32).

6.3 Qualification. With respect to products requiring qualification, awards will be made only for products which are, at the time of award of contract, qualified for inclusion in the applicable Qualified Products List, whether or not such products have actually been so listed by that date. The attention of the contractors is called to these requirements, and manufacturers are urged to arrange to have the products that they propose to offer to the Federal Government tested for qualification in order that they may be eligible to be awarded contracts or purchase orders for the products covered by this specification. The activity responsible for the Qualified Products List is the Space and Naval Warfare Systems Command, Washington, DC; however, information pertaining to qualification of products may be obtained from the Defense Electronics Supply Center (DESC-E), Dayton, Ohio 45444-5270. Application for qualification tests shall be made in accordance with SD-6, "Provisions Governing Qualification", copies of which may be obtained on application to DODSSP - Customer Service, Standardization Document Order Desk, 700 Robbins Avenue, Bldg. 4D, Philadelphia, PA 19111-5094.

6.4 Application information.

6.4.1 Life degradation. The degradation limits change with the duration of the life test. The FR levels are based on catastrophic failures and parameter drifts beyond the degradation limits.

6.4.2 Ripple voltage. The peak of the applied ac ripple voltage plus the applied dc voltage must not exceed the dc voltage rating of the capacitor, either forward or reverse.

6.4.3 Paralleling capacitors. If capacitors are to be paralleled, the capacitance values should be equal and the ripple current through each should be within 20 percent of each other.

6.4.4 Application information for styles CLR10, CLR14, and CLR17.

Source: https://assist.dla.mil -- Downloaded: 2016-11-16T17:02Z
Check the source to verify that this is the current version before use.

6.4.4.1 Thermal shock. When these styles are not subjected to more than five cycles in application (see 4.7.9), they may be operated up to 175°C when properly voltage derated (see figure 2).

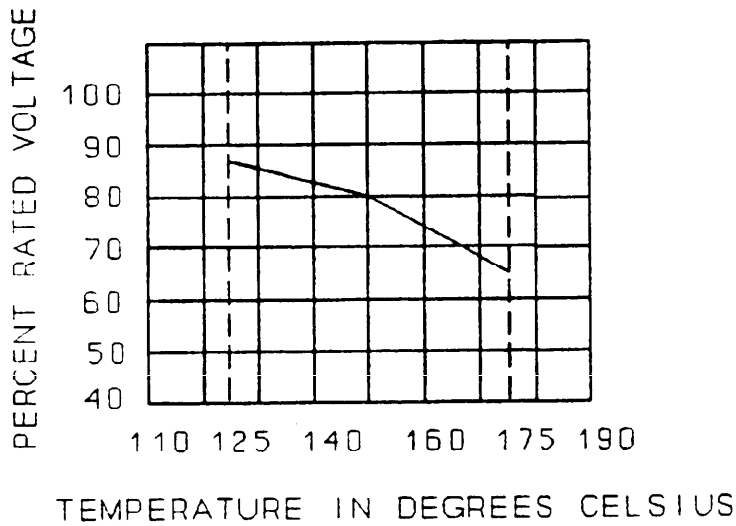

FIGURE 2. Voltage derating with temperature (125°C to 175°C) (styles CLR10, CLR14, and CLR17 only).

Source: https://assist.dla.mil -- Downloaded: 2016-11-16T17:02Z
Check the source to verify that this is the current version before use.

6.4.4.2 Ripple current. The maximum allowable rms ripple current (in milliamperes) is shown in table VIII. The values are for 120-Hz operation over rated temperature (-55°C to +125°C).

TABLE VIII. Maximum ripple current.

Style	Rated voltage (85°C)	Capacitance value	Ripple current 1/
	Volts, dc	µF	mA
CLR10	8	70.0	137
	8	140.0	213
	10	50.0	137
	10	100.0	213
	20	28.0	137
	20	56.0	213
	30	20.0	137
	30	40.0	213
	60	12.0	137
	60	25.0	213
	90	8.0	137
	90	16.0	213
	180	4.0	117
	180	8.0	186
	270	2.5	112
	270	5.0	179
	360	2.0	108
	360	4.0	175
	Volts, dc	µF	mA
CLR14	20	100.0	333
	20	200.0	375
	30	75.0	333
	30	150.0	375
	60	40.0	333
	60	80.0	375
	90	25.0	333
	90	50.0	375
	180	12.0	282
	180	25.0	341
	270	8.0	266
	270	16.0	320
	360	6.0	258
	360	12.0	314
	450	5.0	252
	450	10.0	308
	540	4.0	250
	540	8.0	308
	630	3.5	250
	630	7.0	308

See footnote at end of table.

Source: https://assist.dla.mil -- Downloaded: 2016-11-16T17:02Z
Check the source to verify that this is the current version before use.

TABLE VIII. Maximum ripple current - Continued.

Style	Rated voltage (85°C)	Capacitance value	Ripple current 1/
	Volts, dc	µF	mA
CLR17	30	370.0	550
	30	650.0	694
	30	1300.0	694
	60	200.0	550
	60	350.0	694
	60	700.0	694
	90	120.0	550
	90	220.0	694
	90	450.0	694
	180	42.0	363
	180	60.0	363
	180	110.0	631
	180	230.0	631
	270	28.0	339
	270	40.0	339
	270	75.0	608
	270	150.0	608
	360	22.0	323
	360	30.0	323
	450	17.0	315
	450	25.0	315
	540	14.0	309
	540	20.0	309
	630	12.0	306
	630	18.0	306

1/ For frequencies other than 120 Hz, the 120 Hz ripple current value should be multiplied by the correction factor as shown on figure 3.

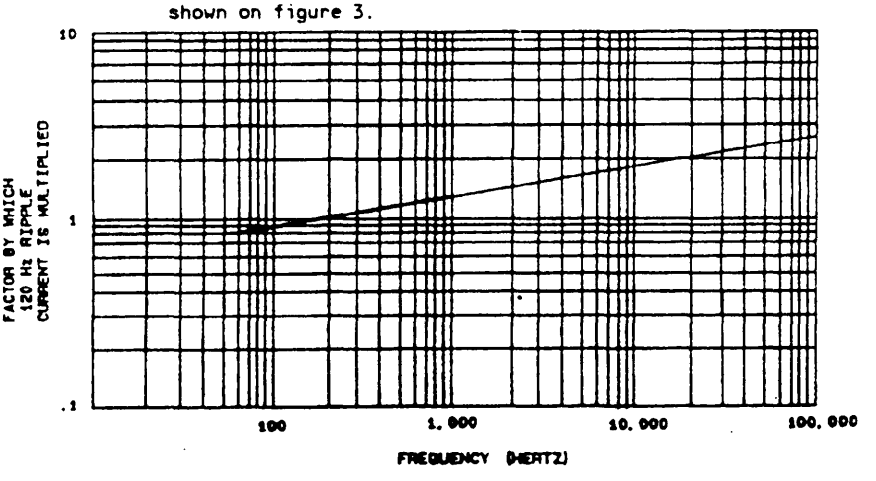

NOTE: A polarizing voltage must be applied to the capacitor which, on negative alternations of the ripple voltage, will preclude polarity reversal and, on positive alternations, will not cause the capacitor's rated voltage to be exceeded.

FIGURE 3. Ripple current correction factors (styles CLR10, CLR14, and CLR17 only).

Source: https://assist.dla.mil -- Downloaded: 2016-11-16T17:02Z
Check the source to verify that this is the current version before use.

6.5 Standard capacitor types. Equipment designers should refer to MIL-STD-198, "Capacitors, Selection and Use of", for standard capacitor types and selected values chosen from this specification. MIL-STD-198 provides a selection of standard capacitors for new equipment design.

6.6 Substitutability data. For a cross reference of the substitutability relationship of superseded styles, see the applicable specification sheet.

6.7 Hermetic seal. For the purpose of this specification, a hermetically-sealed capacitor is one in which the capacitive element is contained within a sealed metal enclosure (see 3.5.1), where sealing is accomplished by material fusion, welding, brazing, or soldering to glass.

6.8 Discharging capacitors before installation. Users are cautioned to make sure the capacitors are fully discharged before their installation on printed wiring boards. A suggested way to do this is to discharge the capacitors through a 470 ohm composition resistor for 5 seconds, and then short them for an additional 30 seconds.

6.9 Tape and reel packaging. Tape and reel packaging is not recommended because of possible damage to the capacitor.

6.10 Key word listing.

Parts per million (ppm).
Statistical process control (SPC).

6.11 Changes from previous issues. Marginal notations are not used in this revision to identify changes with respect to the previous issue, due to the extensiveness of the changes.

Source: https://assist.dla.mil -- Downloaded: 2016-11-16T17:02Z
Check the source to verify that this is the current version before use.

APPENDIX

PROCEDURE FOR QUALIFICATION INSPECTION

10. SCOPE

10.1 Scope. This appendix details the procedure for submission of samples, with related data, for qualification inspection of capacitors covered by this specification. This appendix is a mandatory part of the specification. The information contained herein is intended for compliance.

20. APPLICABLE DOCUMENTS. This section is not applicable to this appendix.

30. SUBMISSION

30.1 Sample. For qualification to FR level M (see 3.1) in accordance with table II.

30.1.1 Single-type submission. A sample consisting of the following quantities shall be submitted for each style, dc rated voltage, capacitance tolerance, and electrolyte for which qualification is sought:

For styles CLR71 and CLR73 (nonhermetic seal): 192 sample units each.
For styles CLR25, CLR27, CLR35, CLR37, CLR65, and CLR69 (hermetic seal): 192 sample units each.
For styles CLR10, CLR14, and CLR17 (hermetic seal): 125 samples units each.
For styles CLR79 and CLR81 (hermetic seal): 236 sample units each.

30.1.2 Hermetic or nonhermetic voltage-group submission (see 3.1). A sample consisting of the quantities listed in 30.1.1, equally divided between the highest capacitance value for the lowest dc rated voltage and the highest capacitance value for the highest dc rated voltage, within a single voltage group for which qualification is sought, shall be submitted. For style CLR65, voltage group II, low capacitance series, the highest capacitance value in the group shall be submitted. For styles CLR79 and CLR81, samples shall be submitted as prescribed herein and in accordance with table II, qualification inspection (for groups III and VII tests). The capacitance tolerance and electrolyte of the submitted sample units shall be the same. A separate submission shall be made for each voltage group in each style for which qualification is sought. Examples of voltage-group capacitor submissions are listed in table IX.

30.2 Test data. When examinations and tests are to be performed at a Government laboratory all sample units shall be subjected to the examinations and tests indicated as nondestructive in table II prior to submission. Each submission shall be accompanied by the test data obtained from these examinations and tests. The performance of the destructive examinations and tests by the manufacturer on a duplicate set of sample units is encouraged, although not required. All test data shall be submitted in duplicate.

30.3 Certification of material. When submitting samples for qualification, the manufacturer shall submit certification, in duplicate, that the materials used in his components are in accordance with the applicable specification requirements.

30.4 Description of item. The manufacturer shall submit a detailed description of the capacitors being submitted for inspection, including, as applicable, information on the type of electrolyte, the case and lead materials, the sleeving material, type of welds or solder buttons, and the case finish.

Source: https://assist.dla.mil -- Downloaded: 2016-11-16T17:02Z
Check the source to verify that this is the current version before use.

TABLE IX. Examples of hermetic or nonhermetic voltage-group submission for "M" FR level.

Style	Seal type	PIN of capacitors to be submitted 1/	Number of sample units	Rated voltage	Case size
				V dc	
CLR25	Hermetic	M39006/01-3033-	96	15	G5
		-3054-	96	100	G5
		2/ -3058-	192	150	G5
CLR27	Hermetic	M39006/02-1231-	96	15	G5
		-1251-	96	100	G5
		2/ -1255-	192	150	G5
CLR35	Hermetic	M39006/03-1352-	96	15	G5
		-1365-	96	50	G5
		2/ -1369-	96	75	G5
		-1381-	96	200	G5
		-1385-	96	250	G5
		-1397-	96	450	G5
CLR37	Hermetic	M39006/04-1248-	96	15	G5
		-1260-	96	50	G5
		-1264-	96	75	G5
		2/ -1277-	96	200	G5
		-1281-	96	250	G5
		-1289-	96	375	G5
CLR71	Non-hermetic	M39006/16-2039-	96	15	G5
		-2064-	96	100	G5
		2/ -2069-	192	150	G5
CLR73	Non-hermetic	M39006/17-2039-	96	15	G5
		-2064-	96	100	G5
		2/ -2069-	192	150	G5

1/ All dash numbers are for the tightest capacitance tolerance, where applicable, for each capacitance value.
2/ Dash number shall include the letter "H" to indicate the optional random vibration requirement or the "-" shall be deleted.

40. EXTENT OF QUALIFICATION

40.1 Single-type submission.

40.1.1 Capacitors. Qualification of capacitance values shall be restricted to values equal to and less than the capacitance value in the style, voltage, and electrolyte submitted. Capacitance tolerance qualification shall be restricted to the capacitance tolerances equal to and wider than the tolerance submitted.

40.2 Voltage-group submission. Qualification of the types submitted shall be the basis for qualification of all intermediate voltages of the voltage group submitted, provided that the style and the electrolyte are the same. Capacitance-range qualification for each voltage submitted shall be restricted to the capacitance values equal to and less than the capacitance value submitted. For intermediate and lower voltages in the same voltage group, capacitance-range qualification shall be restricted to capacitance values equal to and less than the higher capacitance value submitted. Capacitance-tolerance qualification shall be restricted to the capacitance tolerances equal to and wider than the tolerance submitted.

50. QUALIFICATION APPROVAL FOR LOWER FR LEVELS

50.1 Extension of qualification. Extension of qualification to lower FR levels shall be in accordance with 4.4.4.1 of this specification.

Source: https://assist.dla.mil -- Downloaded: 2016-11-16T17:02Z
Check the source to verify that this is the current version before use.

CONCLUDING MATERIAL

Custodians:
Army - ER
Navy - EC
Air Force - 85
NASA - NA

Review activities:
Army - AR
Navy - SH
Air Force - 17, 99
DLA - ES

User activities:
Navy - AS, MC, OS
Air Force - 19

Preparing activity:
Navy - EC

Agent:
DLA - ES

(Project 5910-1705)

Source: https://assist.dla.mil -- Downloaded: 2016-11-16T17:02Z
Check the source to verify that this is the current version before use.

STANDARDIZATION DOCUMENT IMPROVEMENT PROPOSAL

INSTRUCTIONS

1. The preparing activity must complete blocks 1, 2, 3, and 8. In block 1, both the document number and revision letter should be given.
2. The submitter of this form must complete blocks 4, 5, 6, and 7.
3. The preparing activity must provide a reply within 30 days from receipt of the form.

NOTE: This form may not be used to request copies of documents, nor to request waivers, or clarification of requirements on current contracts. Comments submitted on this form do not constitute or imply authorization to waive any portion of the referenced document(s) or to amend contractual requirements.

I RECOMMEND A CHANGE:	1. DOCUMENT NUMBER	2. DOCUMENT DATE (YYMMDD)
	MIL-C-39006D	921223

3. DOCUMENT TITLE Capacitors, Fixed, Electrolytic (Nonsolid Electrolyte), Tantalum, Established Reliability, General Specification for

4. NATURE OF CHANGE (Identify paragraph number and include proposed rewrite, if possible. Attach extra sheets as needed.)

5. REASON FOR RECOMMENDATION

[redacted]

8. PREPARING ACTIVITY

a. NAME	b. TELEPHONE (Include Area Code) (1) Commercial	(2) AUTOVON
Ed Back	(513) 296-6003	986-6003

c. ADDRESS (Include Zip Code)	IF YOU DO NOT RECEIVE A REPLY WITHIN 45 DAYS, CONTACT:
DEFENSE ELECTRONICS SUPPLY CENTER ATTN DESC-EMM 1507 WILMINGTON PIKE DAYTON OH 45444-5270	Defense Quality and Standardization Office 5203 Leesburg Pike, Suite 1403, Falls Church, VA 22041-3466 Telephone (703) 756-2340 AUTOVON 289-2340

DD Form 1426, OCT 89 *Previous editions are obsolete.* 198/290

Source: https://assist.dla.mil -- Downloaded: 2016-11-16T17:02Z
Check the source to verify that this is the current version before use.