MIL-STD-2073-1A
16 JULY 1984
SUPERSEDING
MIL-STD-2073
5 May 1978

MILITARY STANDARD

DOD MATERIEL
PROCEDURES FOR DEVELOPMENT AND APPLICATION OF PACKAGING REQUIREMENTS

AMSC NO. N3335

AREA PACK

Source: https://assist.dla.mil -- Downloaded: 2016-10-21T11:02Z
Check the source to verify that this is the current version before use.

DEPARTMENT OF DEFENSE

Washington, DC 20301

DOD Materiel, Procedures for Development and Application of Packaging Requirements

MIL-STD-2073-1A

1. This Military Standard is approved for use by all Departments and Agencies of the Department of Defense.

2. Beneficial comments (recommendations, additions, deletions) and any pertinent data which may be of use in improving this document should be addressed to the Commanding Officer, Naval Air Engineering Center, Code 9321, Lakehurst, New Jersey 08733 by using the self-addressed Standardization Document Improvement Proposal (DD Form 1426) appearing at the end of this document or by letter.

Source: https://assist.dla.mil -- Downloaded: 2016-10-21T11:02Z
Check the source to verify that this is the current version before use.

FOREWORD

This standard provides procedures for developing and documenting standardized packaging requirements for DOD materiel.

Source: https://assist.dla.mil -- Downloaded: 2016-10-21T11:02Z
Check the source to verify that this is the current version before use.

CONTENTS

		Page
Paragraph 1.	SCOPE	1
1.1	Purpose	1
1.2	Application	1
2.	REFERENCED DOCUMENTS	1
2.1	Issues of documents	1
3.	DEFINITIONS	1
3.1	Critical items	1
3.1.1	Critical chemically	1
3.1.2	Critical physically	1
3.2	Noncritical items	1
3.3	Categorization	1
3.3.1	Common group items	1
3.3.2	Selective group items	2
3.3.3	Special group items	2
3.4	Consumable	2
3.5	Levels of protection	2
3.5.1	Level A	2
3.5.2	Level B	2
3.5.3	Level C	3
3.5.4	Industrial packaging	3
3.6	Electrical hardware	3
3.7	Electrical items	3
3.8	Electrically balanced or calibrated	3
3.9	Electronic parts susceptible to damage by environmental field forces	4
3.10	Fragility factor	4
3.10.1	Approximate fragility of various packaged items	4
3.11	Delicate	4
3.12	Flexible	4
3.13	Fragile	4
3.14	Noncoilable	4
3.15	Rugged	4
3.16	Hazardous material	5
3.16.1	Proper shipping name	5
3.17	Sealed	5
3.18	Packaging terminology	5
3.18.1	Packaging	5
3.18.1.1	Preservation	5
3.18.1.2	Quantity per unit pack	5
3.18.1.3	Unit pack	5
3.18.1.4	Intermediate pack	5
3.18.1.5	Exterior pack	5
3.18.1.6	Packing	5
3.18.1.7	Unitization	6
3.18.1.8	Marking	6
3.18.1.9	Containerization	6
3.18.1.10	Packaging design validation	6

Source: https://assist.dla.mil -- Downloaded: 2016-10-21T11:02Z
Check the source to verify that this is the current version before use.

CONTENTS (cont'd)

			Page
Paragraph	3.18.1.11	Prototype pack	6
	3.18.1.12	Repairable item	6
	3.18.1.13	Repairable-Unserviceable item	6
	3.18.1.14	Reusable containers	6
	3.18.1.14.1	Long life container (100 trips minimum)	6
	3.18.1.14.2	Short life container (10 trips minimum)	6
	3.18.1.14.3	Specialized container	6
	3.18.1.14.4	Multiapplication containers	7
	3.18.1.15	Types of load	7
	3.18.1.15.1	Type 1, easy load	7
	3.18.1.15.1.1	Examples of Type 1, easy load	7
	3.18.1.15.2	Type 2, average loads	7
	3.18.1.15.2.1	Examples of Type 2, average loads	7
	3.18.1.15.3	Type 3, difficult load	7
	3 18.1.15.3.1	Examples of Type 3, difficult loads	8
	3.18.1.16	Modular containers	8
	3.19	Container Design Retrieval System (CDRS)	8
	4	GENERAL REQUIREMENTS	8
	4.1	General	8
	4.2	Standards precedence	8
	4.3	Specially designed containers	8
	4.4	Container Design Retrieval System (CDRS)	8
	4.5	Shipping containers	9
	4.6	Parcel Post shipments	9
	5.	DETAILED REQUIREMENTS	9
	5.1	General considerations	9
	5.1.1	Use of unit containers	9
	5.1.2	Unit container size	9
	5.2	Excess and residual material	9
	5.2.1	Serviceable excess and residual material	9
	5.2.2	Repairable excess and residual parts	9
	5.3	Other general considerations	10
	5.3.1	Shock and vibration absorption	10
	5.3.2	Determination of item fragility	10
	5.3.3	Energy damping methods and package cushioning design	10
	5.3.4	Fire retardant materials	10
	5.3.5	Loose fill material	10
	5.3.6	Quantity per unit pack	10
	5.3.7	Kits	10
	5.4	Marking	10
	5.5	Packaging design validation provisions	10
	5.6	Dummy load	11
	5.7	Guidance in selecting packaging methods	11
	5.8	Procedural requirements	11
	5.9	Quality assurance provisions	11
	5.9.1	Responsibility for inspection	11

Source: https://assist.dla.mil -- Downloaded: 2016-10-21T11:02Z
Check the source to verify that this is the current version before use.

CONTENTS (cont'd)

			Page
Paragraph	5.9.2	System requirements	11
	5.9.3	Government verification	12
	5.9.3.1	Deviation	12
	5.9.4	Quality conformance inspection	12
	5.9.4.1	Materials	12
	5.9.4.2	Preservation inspection	12
	5.9.4.2.1	Lot formation	12
	5.9.4.2.2	Sampling for examination	12
	5.9.4.2.3	Sampling for tests	12
	5.9.4.3	Packing inspection	12
	5.9.4.3.1	Lot formation	13
	5.9.4.3.2	Sampling for examination	13
	5.9.5	Government acceptance	13
	5.9.6	Control test	13
	5.9.6.1	Responsibility	13
	5.9.6.2	Frequency	13
	5.9.6.3	Tests	13
	5.9.6.4	Failure	13
	5.9.7	Quality control program or inspection system requirements	13
	6.	CONTRACTUAL REQUIREMENTS	13
	6.1	General requirements	13
	6.2	Prototype pack	14
	6.3	Contract data requirements	14
	7.	NOTES	14
	7.1	Supersession	14

FIGURES

Figure	1.	Decision chart guide in use of MIL-STD-2073	16

TABLES

Table	I.	Approximate fragility factors	17
	II.	Packaging inspection provisions for methods/submethods of MIL-P-116	18

APPENDICES

APPENDIX A

Appendix	A.	APPLICABLE DOCUMENTS	19
Paragraph	10.	Scope	19
	10.1	Purpose	19
	10.2	Use	19

Source: https://assist.dla.mil -- Downloaded: 2016-10-21T11:02Z
Check the source to verify that this is the current version before use.

CONTENTS (cont'd)

			Page
Paragraph	20.	Specifications and standards	19
	30.	Other Government documents, drawings, and publications	36
	40.	Other publications	36

APPENDIX B

Appendix	B.	PACKAGING DESIGN VALIDATION PROVISIONS	37
Paragraph	10	Scope	37
	10.1	Responsibility for testing	37
	10.1.1	Alternate test procedure approval	37
	20.	Packaging design validation tests	37
	30.	Dummy load	37
	40.	Test methods	38
	40.1	Rough handling tests	38
	50.	Applicability of tests	38
	50.1	Small containers	38
	50.2	Large containers	38
	50.3	Ammunition unit loads	38
	60.	Disposition of samples after test	38
	70.	Marking of containers for free-fall drop tests	38
	70.1	Bags and cylindrical containers	38
	70.2	Square containers	38
	70.3	Rectangular containers	39
	80.	Sequence of free-fall drop tests for procedures B and E in Table I	39

FIGURES

Figure	1	Marking the specimen containers prior to test	40

TABLES

Table	I	Rough handling tests	41

APPENDIX C

Appendix	C.	SELECTION OF PACKAGING REQUIREMENTS	43
Paragraph	10.	Scope	43
	10.1	General	43
	10.2	Detailed	43
	10.2.1	Characteristics	43
	10.2.2	Code selection	44

Source: https://assist.dla.mil -- Downloaded: 2016-10-21T11:02Z
Check the source to verify that this is the current version before use.

CONTENTS (cont'd)

			Page
Paragraph	10.2.3	Decision guidance	44
	10.3	Category code	44
	20	Categorization	44
	20.1	Method	44
	20.1.1	Item characteristics	44
	20.1.2	First category - chemical and physical	44
	20.1.2.1	Item characteristics and symbols	45
	20.1.2.2	Characteristic consideration	45
	20.1.2.3	Examination and research	45
	20.1.2.4	Critical, noncritical and preservative applicability	45
	20.1.2.5	Critical group items	45
	20.1.2.6	Noncritical group items	46
	20.1.2.7	Preservative application: permitted (blank) or prohibited (X)	46
	20.1.3	Second category - weight/fragility	46
	20.1.4	Third category-preservatives	46
	20.1.5	Packaging by use of predetermined data	47
	20.1.6	Validation of package design for common group items	47
	20.1.7	Packaging design validation and testing of selective and special group items	47
	30.	Detailed requirements	47
	30.1	Method of recording requirements	47
	30.2	Code sequence for common items	47
	40.	Formulas	47
	50.	Cushioning correlation	47
	60.	Container selection	47

FIGURES

Figure	1.	Format for interpretation of packaging code sequence for common group items	48

TABLES

Table	I.	Chemical and physical characteristics	49
	II.	Table for selecting weight and fragility category	55
	III.	Table for selecting preservative category	56
	IV.	Corresponding coded packaging data for common group items	57
	V.	Formulas for material weight and size calculations	61

Source: https://assist.dla.mil -- Downloaded: 2016-10-21T11:02Z
Check the source to verify that this is the current version before use.

CONTENTS (cont'd)

			Page
Paragraph	VI.	Cushioning correlation for drops of 30 inches	66
	VII.	Exterior shipping containers-selection by maximum weight of contents and levels of protection	67

APPENDIX D

Appendix	D.	DEVELOPMENT OF PACKAGING REQUIREMENIS FOR PACKAGING OF KITS (PARTS AND MODIFICATION)	71
Paragraph	10	Scope	71
	20.	Preservation	71
	20.1	Consolidation of different items within a method or submethod of preservation	71
	20.2	Application of preservative compounds or oils	72
	20.2.1	Kits procured for oxygen equipment	72
	20.2.2	Preservation procedures	72
	20.2.3	Items susceptible to corrosion (iron, steel, magnesium, etc.)	72
	30.	Unit preservation	72
	30.1	Physical protection	72
	30.2	Segregation of items within packs	72
	30.3	Skin packaging	72
	30.3.1	Skin packaging metals	72
	30.3.2	Skin packaging shims, gaskets, etc	73
	40.	Packing	73
	50.	Marking and identification	73
	50.1	General	73
	50.2	Hazardous materials	73
	50.3	Additional marking	73
	50.3.1	Nonconsolidated items	73
	50.3.2	Individually packed items	73
	50.3.3	Unitized items	73
	50.3.4	Skin packs	73
	50.3.5	Packaging kit contents list	73
	50.3.5.1	Contents list of skin-packaged kits	74

APPENDIX E

Appendix	E	SELECTION OF MULTIAPPLICATION CONTAINERS	75
Paragraph	10.	Scope	75
	10.1	Application	75

Source: https://assist.dla.mil -- Downloaded: 2016-10-21T11:02Z
Check the source to verify that this is the current version before use.

CONTENTS (cont'd)

			Page
Paragraph	20.	General requirements	75
	20.1	Dynamic cushioning values	75
	20.2	Item size range	75
	20.3	Techniques to assure preservation/ item integrity	75
	20.3.1	Barrier rupture	75
	20.3.2	Stress areas	75
	20.3.3	Desiccant placement	76
	30.	Detail requirements	76
	30.1	Type and use	76
	30.1.1	Type I	76
	30.1.2	Type II	76
	30.1.3	Type III	76
	30.1.4	Type IV	76
	30.1.5	Type VI	76
	30.1.6	Type VII	77
	30.1.7	Type VIII	77
	30.2	Identification of multiapplication containers	77
	30.3	Coded data	77
	30.4	Packaging design validation	77
	40.	Availability	77
	40.1	General Services Administration (GSA)	77
	40.2	Aviation Supply Office	77
	40.3	Commercial sources	77

TABLES

Table	I.	Multiapplication container selection	78
Appendix	F	PROCEDURAL REQUIREMENTS	87
Paragraph	10.	Scope	87
	20.	Requirements	87
	20.1	Detailed requirements	87
	20.2	Preservation requirements	87
	20.2.1	Disassembly	87
	20.2.2	Cleaning drying and preservative application (Level A, B, and C)	87
	20.2.2.1	Cleaning	87
	20.2.2.1.1	Brake system components	87
	20.2.2.1.2	Impregnated items	87
	20.2.2.1.3	Complex items	87
	20.2.2.1.4	Burned powder removal	87
	20.2.2.1.5	Recoil, equilibrator, buffer cylinders, and gun tubes	87
	20.2.2.1.6	Nonmetallic items	87
	20.2.2.1.7	Materiel used with liquid oxygen	88

Source: https://assist.dla.mil -- Downloaded: 2016-10-21T11:02Z
Check the source to verify that this is the current version before use.

CONTENTS (cont'd)

		Page
Paragraph 20.2.2.1.8	Optical elements and assemblies	88
20.2.2.1.8.1	Cleaning material and equipment	88
20.2.2.1.8.2	Cleaning operations	88
20.2.2.2	Drying	88
20.2.2.3	Preservative application	89
20.2.2.3.1	Partially painted or combination metallic/nonmetallic parts	89
20.2.2.3.2	Nonferrous and plated items	89
20.2.2.3.3	Sealing item openings	89
20.2.2.3.4	Brake and clutch components	89
20.2.2.3.5	Hydraulic brake system and components	89
20.2.2.3.6	Operational lubricants and hydraulic oils and fluids	89
20.2.2.3.7	Volatile corrosion inhibitor (VCI).....	90
20.2.2.3.8	Impregnated items	90
20.2.2.3.9	Internally preserved items	90
20.2.2.3.10	Rubber and synthetic rubber items	90
20.2.2.3.11	Items with grease fittings	90
20.2.2.3.12	Supplemental oil reapplication	90
20.2.3	Packaging materials	90
20.2.4	Item preparation (flexible-coilable)....	91
20.2.5	Wheeled items	91
20.2.6	Caging or damping	91
20.2.7	External aircraft drop tank containers	91
20.2.8	Packaging gaskets or seals	91
20.2.9	Equipment mounts	91
20.2.10	Electronic parts susceptible to damage by environmental field forces	91
20.2.11	Radioactive materials	92
20.2.11.1	Quantity of radioactive materials.....	92
20.2.11.2	Shielding material	92
20.2.11.3	Shield support	92
20.2.11.4	Shield design	92
20.2.11.5	Package radiation	92
20.2.11.6	Container design	92
20.2.11.7	Container exceeding 200 pounds in weight	92
20.2.11.8	Container approval	93
20.2.11.9	Metal container	93
20.2.11.10	Container size	93
20.2.11.11	Container handling devices	93
20.2.12	Repairable assemblies	93
20.3	Unit pack requirements	93
20.3.1	Level A	93
20.3.1.1	Intimate wrap	93
20.3.1.1.1	Intimate wrap size.....	93
20.3.1.1.2	Intimate neutral wraps	93
20.3.1.2	Cushioning, blocking and bracing.....	93

Source: https://assist.dla.mil -- Downloaded: 2016-10-21T11:02Z
Check the source to verify that this is the current version before use.

CONTENTS (cont'd)

			Page
Paragraph	20.3.1.3	Stiffeners	94
	20.3.1.3.1	Load deflector stiffeners	94
	20.3.1.4	Desiccant application	94
	20.3.1.5	Unit containers	94
	20.3.1.5.1	Container size	94
	20.3.1.5.2	Conforming heat sealed bags	94
	20.3.2	Level B	94
	20.3.2.1	Requirements	94
	20.3.2.2	Bare ferrous items (not painted or plated)	94
	20.3.2.3	Ferrous and nonferrous combinations	94
	20.3.2.4	Completely plated, painted and nonferrous items	95
	20.3.2.5	Items requiring protection from direct contact with water	95
	20.3.2.6	Cushioning	95
	20.3.2.7	Unit containers	95
	20.4	Intermediate pack requirements	95
	20.4.1	Level A and B	95
	20.4.1.1	Intermediate container	95
	20.4.1.2	Quantities in intermediate containers	95
	20.4.1.3	Intermediate container limitations	96
	20.4.1.4	Closure	96
	20.5	Exterior packing requirements	96
	20.5.1	General considerations	96
	20.5.2	Skidded containers	97
	20.5.3	Shipping container	97
	20.5.4	Container closure	97
	20.5.5	Reinforcement strapping of exterior containers	97
	20.5.6	Parcel Post shipment	97
	20.5.7	Consolidated pack	97
	20.5.8	Unitization-consolidation	98
	20.5.8.1	Palletization	98
	20.5.8.2	Criteria for unitization and consolidation	98
	20.5.8.2.1	Palletized loads	98
	20.5.8.2.2	Commercial expendable pallets	98
	20.5.9	Stackability and superimposed loads	98
	20.6	Level C	98
	20.7	Preparation of general cargo for air shipment	99
	20.8	Hazardous material shipments	99
	20.8.1	By military air (including Logair and Quicktrans)	99
	20.8.2	Other than by military air	99
	20.9	Workmanship	99
	20.10	Marking	99

Source: https://assist.dla.mil -- Downloaded: 2016-10-21T11:02Z
Check the source to verify that this is the current version before use.

CONTENTS (cont'd)

			Page
Paragraph	20.10.1	General	99
	20.10.2	Shelf life codes	99
	20.11	Packaging design validation tests	99

TABLES

Table	I.	Selection and closure of unit and intermediate containers	100
	II.	Guidance for establisbing number of unit packs per intermediate container	101

APPENDIX G

Appendix	G.	FACTORS AND FORMULAE ESTABLISHING QUP	102
Paragraph	10.	Scope	102
	20.	Determination of QUP	102
	20.1	Repairable items (depot or field level) or items designated Hi-Value or Hi-Priority	102
	20.2	Consumable items	102
	20.3	Irregular configuration, delicate or fragile item	102
	20.4	Pairs, sets, etc. items	102
	20.5	Items unit packed in accordance with Method II	102
	20.6	Expendable items not peculiar to overhaul, costing less than $20.00	102
	20.7	Kit	103
	20.8	Lumber, raw stock, paints, dope, etc	103
	20.9	Factors and formulae establishing QUP	103
	20.9.1	Formula A	103
	20.9.2	Formula B	103
	30	Quantity per unit pack determination formula	104
	30.1	Formula A	104
	30.2	Formula B	105

APPENDIX H

Appendix	H.	RECOMMENDED FIBERBOARD CONTAINER SIZE LIST	107
Paragraph	10.	Scope	107

Source: https://assist.dla.mil -- Downloaded: 2016-10-21T11:02Z
Check the source to verify that this is the current version before use.

CONTENTS (cont'd)

Page

TABLES

Table I. Recommended fiberboard container size list 107

APPENDIX J

Appendix J. DATA REQUIREMENTS 110

Paragraph 10. Scope 110
10.1 Data requirements 110

APPENDIX K

Appendix K. PACKAGING DATA FORMS 111

Paragraph 10. Scope 111
20. General requirements 111
20.1 Development of data 111
20.2 Recording data 111
20.2.1 Manual recording of data 111
20.2.2 Punch Card Accounting Machine (PCAM) recording of data 111
20.2.3 National Stock Number (NSN) requirements 111
20.2.4 Coded data 111
20.2.5 Kits (Parts and Modification) 111
20.2.6 Special packaging instructions 112
20.2.7 In-the-clear instructions 112
20.2.8 Subcontractors and vendors 112
30. Detailed requirements 112
30.1 Submittal of packaging data 112
30.2 Preparation of packaging data 112
30.2.1 Nomenclature 112
30.2.2 Design activity code and part number 113
30.2.3 Configuration item 113
30.2.4 Item identification data 113
30.2.5 Preservation and packing data 115
30.2.6 Supplemental data 124
30.2.7 Special packaging instruction (SPI) data 125
30.2.8 Compatibility with requirements for configuration item specifications 127
30.3 Conditions for approval of contractor developed packaging data 127
30.3.1 Procedures for submitting forms for approval 127
30.3.2 Integrated Logistics Data File (ILDF) ... 128
30.3.3 Blanket approval of data 128
30.3.4 Return of approved data 128
30.4 Transmittal of data 128
30.4.1 Preservation and packing 128

Source: https://assist.dla.mil Downloaded: 2016-10-21T11:02Z
Check the source to verify that this is the current version before use.

CONTENTS (cont'd)

			Page
Paragraph	30.4.2	Special packaging instructions	129
	30.4.3	Method of transmission	129
	40.	Preparation of special packaging instruction (SPI)	129
	40.1	General	129
	40.2	Format	129
	40.2.1	Identification	129
	40.2.2	Details of completion of SPI	129
	40.2.3	Styles	131
	40.2.4	Variations in style and format	132
	40.3	Reproduction	132
	50.	In-the-clear packaging instructions	132
	50.1	General	132
	50.2	Example	132

FIGURES

Figure	1.	Preservation and packing data	133
	2.	Special packaging instruction	134
	3.	In-the-clear packaging instructions	136

TABLES

Table	I.	Item identification data	113
	II.	Preservation-Packing data	116
	III.	Supplemental data	124
	IV.	Special packaging instruction data	126

Source: https://assist.dla.mil -- Downloaded: 2016-10-21T11:02Z
Check the source to verify that this is the current version before use.

1. SCOPE

1.1 Purpose. This standard provides criteria for control and development of requirements for packaging DOD materiel based on physical - chemical characteristics, fragility, dimensions and weight. This standard also supplements MIL-STD-1367 by providing packaging details, formulas, and other pertinent information for developing packaging bills of material and other logistic data by manual procedures or electronic data processing equipment.

1.2 Application. It is intended that this standard be used in developing detailed packaging requirements and provide for their application in contracts and as a procedural requirement for the packaging of DOD materiel. A decision chart is included as an aid in developing these requirements (see Figure 1).

2. REFERENCED DOCUMENTS

2.1 Issues of Documents. The documents usually referenced in this section are included in this standard as Appendix A.

3. DEFINITIONS

3.1 Critical items. Items meeting one or more of the following criteria are considered critical.

3.1.1 Critical chemically. Items which are of such a nature that any degree of deterioration (in the form of corrosion, stain, scale, mold, fungi, bacteria, etc.) caused by oxygen, moisture, sunlight, living organisms, temperature, time and other contaminants, will result in premature failure or malfunction of the item or equipment in which installed or to which the item is interfaced.

3.1.2 Critical physically. Items of such a nature that a slight degree of physical action on the items or any integral surfaces thereof renders them unfit for use. This includes items having a surface finish of 32 microinches root mean square or less, requiring a high degree of cleanliness and freedom from contamination as well as those requiring special protection against shock, vibration, abrasion and distortion damage.

3.2 Noncritical items. All items not meeting the criteria set forth for critical items.

3.3 Categorization. The process of evaluating an item by chemical and physical characteristics that are significant in determining the preservation requirements.

3.3.1 Common group items. Items with a fragility rating of 85Gs (see 3.10) or more which have no dimension greater than 24 inches and not more than 10 pounds mass (weight). Excluded from this group are items for which this standard makes special provisions, such as electronic parts susceptible to damage by environmental field forces, hazardous material, kits, rubber and synthetic rubber items unit packed in quantities of more than one or items requiring stiffeners.

Source: https://assist.dla.mil -- Downloaded: 2016-10-21T11:02Z
Check the source to verify that this is the current version before use.

3.3.2 Selective group items. Items that cannot appropriately utilize predetermined packaging developed by common group technique yet do not require a drawing, sketch, illustration, or separate narrative type instruction to specify packaging details. (These packaging details can be found in MIL-STD-2073-2 codes or in-the-clear data).

3.3.3 Special group items. Items with peculiar characteristics such as mass (weight), configuration, complexity, fragility, or other consideration and cannot be grouped as common or selective. An item is considered special if drawings, sketches, illustrations, or separate narrative type instructions identified to the item are required to specify packaging details.

3.4 Consumable. An item that is normally expended or used up beyond recovery in the use for which it was designed or intended.

3.5 Levels of protection. The following are levels of protection which apply equally to preservation and packing. Industrial packaging, when used to satisfy the required level of protection, will be in accordance with 3.5.4.

3.5.1 Level A. Maximum protection, designated as Level A, is the level of preservation or packing required for protection of material against the most severe worldwide shipment, handling, and storage conditions. Preservation and packing so designated will be designed to protect materiel against direct exposure to extremes of climate, terrain, operational and transportation environments without protection other than that provided by the pack. The conditions to be considered include, but are not limited to:

(a) Multiple handling during transportation and in-transit storage from point of origin to ultimate user.

(b) Shock, vibration and static loading during shipment.

(c) Loading on shipdeck, transfer at sea, helicopter delivery and offshore or over-the-beach discharge, to ultimate user.

(d) Environmental exposure during shipment or during in-transit operations where port and warehouse facilities are limited or nonexistent.

(e) Outdoor storage in all climatic conditions for a minimum of one year.

(f) Static loads imposed by stacking.

3.5.2 Level B. Intermediate protection, designated as level B, is the level of preservation or packing required for protection of material under anticipated favorable conditions during worldwide shipment, handling, and storage. Preservation and packing so designated will be designed to protect material against physical damage and deterioration during favorable conditions of shipment, handling and storage. The conditions to be considered include, but are not limited to:

(a) Multiple handling during transportation and in transit storage.

Source: https://assist.dla.mil -- Downloaded: 2016-10-21T11:02Z
Check the source to verify that this is the current version before use.

(b) Shock, vibration and static loading of shipment worldwide by truck, rail, aircraft or ocean transport.

(c) Favorable warehouse environment for a minimum of 18 months.

(d) Environmental exposure during shipment and in-transit transfers, excluding deck loading and offshore cargo discharge.

(e) Stacking and supporting superimposed loads during shipment and extended storage.

3.5.3 Level C. Minimum protection, designated as Level C, will be used for protection of material under known favorable conditions. In general, the following criteria determine the requirements for this level of protection.

(a) Use or consumption of the item at the first destination.

(b) Shock, vibration and static loading during the limited transportation cycle.

(c) Favorable warehouse environment for a maximum of 18 months.

(d) Effects of environmental exposure during shipment and in-transit delays.

(e) Stacking and supporting superimposed loads during shipment and temporary storage.

When Level C is specified, it must reference applicable Public Laws (Code of Federal Regulations) or a specific Federal or Military Specification, Standard or Instruction.

3.5.4 Industrial packaging. Industrial packaging will be acceptable for any level of protection whenever the technical design details of the package meet all conditions of the level of protection specified. Industrial packaging must provide the same level of protection against physical and environmental damage as the military package. It will be marked to the level it meets. Bulk type practices such as are used in interand intraplant shipments or shipments to jobbers are not acceptable, unless they are the usual trade practices for selected commodities; e.g. petroleum, coal and textiles.

3.6 Electrical hardware. Items that eventually become part of an electrically functioning assembly but not in all instances requiring the preservation or protection required of the unit or set e.g.. ground clamps, motor brush etc.

3.7 Electrical items. Electrical items are those items designed to generate, transmit, store, or impede an electrical current.

3.8 Electrically balanced or calibrated. Items having characteristics that may vary with humidity or temperature changes, use, or age; they usually require periodic checks to assure that originally designed limits and characteristics are maintained.

Source: https://assist.dla.mil -- Downloaded: 2016-10-21T11:02Z
Check the source to verify that this is the current version before use.

3.9 Electronic parts susceptible to damage by environmental field forces. Devices for which many of the electrical characteristics are determined by temperature dependent rate of flow of electrons into ion "holes", with nomenclature such as microcircuits, semiconductors, thin film resistors, and diodes which may be damaged or altered in electrical characteristics by electrostatic, electromagnetic, magnetic or radioactive fields.

3.10 Fragility factor. Maximum force acceleration or deceleration expressed in units of gravity (G's) that can be applied to an item in its nonoperating state without causing physical damage or changes in its operational characteristics. The G level shall be expressed in terms of the amplitude of a trapezoidal-shaped shock pulse with a duration of between 20 and 60 milliseconds and a rise time and fall time equal to or less than 1/10 of the specific pulse duration.

3.10.1 Approximate fragility of various packaged items. Table I provides ranges of fragility for types of items common to the DOD inventory. This table is based primarily on product specifications. Product specifications generally require that the item function normally while under a specified minimum stress, usually centrifugal, expressed in Gs. The G-factor ranges given in Table I are conservative.

3.11 Delicate. A delicate item is one which is so constructed that light, moderate forces will either distort, displace, or deform elements or portions of the item to the extent that malfunction or misfit of the item occurs. The forces are quantified in terms of fragility. Examples of delicate items include those finely balanced mechanisms such as gyroscope equipment, potentiometers, galvanometers, devices containing filaments, and time and dimension measuring devices.

3.12 Flexible. A flexible item is one that, because of its assembly characteristics, material content, or disproportionate dimensional relationships, will change its shape in some manner under very moderate pressure including pressure which is exerted by the item itself when not fully supported over a major portion of its load-bearing surface. Examples of flexible items are chains, cables, certain gaskets, rubber items, and wiring harnesses.

3.13 Fragile. A fragile item is one whose physical characteristics permit fracturing or shattering of the item when it is subjected to moderately light impact forces. Fragile items include those made of glass, plastic, and low tensile strength brittle metals which are rendered vulnerable to light impact forces by the fact that the materials of which they are made are both brittle and present in relatively thin cross sections.

3.14 Noncoilable. Noncoilable items have the physical characteristics of flexible items as described in 3.12 but have additional characteristics which will not permit the coiling without damage or permanent deformation. Examples of noncoilable items are thin metal shims, gaskets, and items which are flexible only because of a very thin cross section in one or more dimensions.

3.15 Rugged. A rugged item is one that is so constituted physically that extreme force must be exerted to change its shape in any way and which will be permanently marked or damaged by such shape-changing forces.

Source: https://assist.dla.mil -- Downloaded: 2016-10-21T11:02Z
Check the source to verify that this is the current version before use.

3.16 Hazardous material. A substance or material which has been determined by the Secretary of Transportation to be capable of posing an unreasonable risk to health, safety, and property when transported in commerce and which has been so designated. (This includes all items listed as hazardous in Title 49 CFR and other applicable modal regulations effective at the time of shipment.)

3.16.1 Proper shipping name. Proper shipping name is the name of the hazardous material shown in Roman print (not italics) in part 172.101 of Title 49 CFR or AFR 71-4/TM38-250/NAVSUP PUB 505/MCOP 4030.190/DLAM 4145.3.

3.17 Sealed. An item is considered sealed if the entrances to the interior of the item are sealed with gaskets or closely mated surfaces under mechanical pressure or are sealed by threaded closure devices (except plastic caps). Sealed items also include assemblies which are encapsulated in plastics, ceramics, glass or metal with completely cemented seams or joints closing the interior to the entrance of liquid water. Hermetic sealing is a seal that will exclude air and will be leakproof at ambient temperatures and atmospheric pressures and is usually glass to glass, metal to metal or metal to glass.

3.18 Packaging terminology.

3.18.1 Packaging. The processes and procedures used to protect materiel from deterioration and damage. It includes cleaning, drying, preserving, packing, marking, and unitization.

3.18.1.1 Preservation. Application of protective measures, including cleaning, drying, preservative materials, barrier materials, cushioning, and containers when necessary.

3.18.1.2 Quantity per unit pack. The quantity of items to be contained in a unit pack shall be given in the terminology of the definitive unit of issue. If a nondefinitive unit of issue is assigned to the stock item, the unit of issue shall be further quantified by a unit of measure and measurement quantity.

3.18.1.3 Unit pack. The first tie, wrap, or container applied to a single item or a quantity thereof, or to a group of items of a single stock number, preserved or unpreserved, which constitutes a complete or identifiable package. The unit pack should be overpacked for shipment unless the unit container is specifically designed to provide shipping protection.

3.18.1.4 Intermediate pack. A wrap, box, or bundle which contains two or more unit packs of identical items.

3.18.1.5 Exterior pack. A container, bundle, or assembly which is sufficient by reason of material, design and construction to protect materiel during shipment and storage. This can be the unit pack or a container with any combination of unit or intermediate packs.

3.18.1.6 Packing. Assembling of items into a unit, intermediate, or exterior pack with necessary blocking, bracing, cushioning, weatherproofing, reinforcement and marking.

Source: https://assist.dla.mil -- Downloaded: 2016-10-21T11:02Z
Check the source to verify that this is the current version before use.

3.18.1.7 Unitization. Any combination of unit, intermediate or exterior packs of one or more line items of supply into a single load in such a manner that the load can be handled as a unit through the distribution system. Unitization (unitized loads-unit loads) encompasses consolidation in a container, placement on a pallet or load base or securely binding together.

3.18.1.8 Marking. Application of numbers, letters, labels, tags, symbols or colors for handling or identification during shipment and storage.

3.18.1.9 Containerization. The use of an article of transport equipment designed to facilitate and optimize the carriage of goods by one or more modes of transportation without intermediate handling of the contents.

3.18.1.10 Packaging design validation. The establishment of the capability of the prototype pack to protect the integrity and serviceability of the item(s) for which the package is designed.

3.18.1.11 Prototype pack. A preproduction pack designed and constructed to meet specified requirements and which is the model for production packaging.

3.18.1.12 Repairable item. An item which has been determined by the application of engineering, economic, and other factors to be the type of item feasible of restoration to a serviceable condition through regular repair procedures.

3.18.1.13 Repairable-Unserviceable item. An item in unserviceable condition which can be restored to serviceable condition economically.

3.18.1.14 Reusable containers. A shipping and storage container which is designed for reuse without impairment of its protective function and which can be repaired and/or refitted to prolong its life or to adapt it for shipment of items other than that for which it was originally employed. Reusable shipping and storage containers are further defined in the following paragraphs.

3.18.1.14.1 Long life container (100 trips minimum). A shipping container having features such that it can be used repeatedly, and its service life can be expected to equal the service life of the item it is designed to protect. These containers may be refurbished by appropriate maintenance practices and restored to full usage for stockpile.

3.18.1.14.2 Short life container (10 trips minimum). A shipping container that can be used for a limited number of times. The container is usually made of wood, plywood, fiberboard or similar material and includes cushioning, die-cuts, inserts, fasteners, etc., which may be described by a drawing and a bill of materials. The container can usually be identified by military or federal specification numbers.

3.18.1.14.3 Specialized container. Specialized containers are generally the long-life variety and are uniquely configured to support and protect a specific item, or limited variety of items, during handling, storage, forward and return shipment, unpackaging by the user or to protect personnel and equipment from hazardous contents. Containers of this type frequently incorporate energy absorbing systems, temperature control systems or special

Source: https://assist.dla.mil-- Downloaded: 2016-10-21T11:02Z
Check the source to verify that this is the current version before use.

features to make handling or shipment possible, easier or safer. Engineering drawings, or equivalent, are used to define form, fit, function, materials, tolerances and manufacturing techniques. Specialized shipping containers, internal fixtures and other fitments result from original design efforts or the redesign or modification of an existing container to meet a specific application or need.

3.18.1.14.4 Multiapplication containers. Multiapplication containers are designed to protect a variety of components within a given fragility and size range. They can be manufactured in a similar manner to that used for specialized containers or in accordance with applicable/specified military or federal specifications. A multiapplication container can be either of the short-life or long-life variety. Short life multiapplication containers include "fast packs", consisting of a family of standard size cushioned fiberboard shipping containers of four types. These types are fully described in PPP-B-1672 and are identified as Types I, II, III and IV in Table I of Appendix E. Long-life multiapplication reusable containers are designated as Types VI thru VIII and are also described in Table I of Appendix E. These containers are made of rugged plastic construction containing internal cushioning pads or permanent shock mitigation systems (e.g., shear mounts, steel coils, springs, etc.) and are designed to protect repairable components packaged therein, during forward and retrograde movements within the supply system.

3.18.1.15 Types of load. Types of loads are determined by the degree of structural strength supplied to the shipping container by the contents. Loads are classified as Type 1, easy loads; Type 2, average loads; and Type 3, difficult loads, as described herein.

3.18.1.15.1 Type 1, easy load. A Type 1, easy load, is developed from an item which completely fills the outer shipping container or from items of moderate density prepackaged in an interior container which completely fills the outer shipping container. Easy load items are not easily damaged by puncture or shock and do not shift or otherwise move within the package.

3.18.1.15.1.1 Examples of Type 1, easy loads. Items packaged in boxes or cans which are prepackaged in fiberboard boxes prior to overpacking in the shipping container; chests; tool kits; and sturdy instruments which are fully in contact with, and support, all faces of the shipping container.

3.18.1.15.2 Type 2, average load. A Type 2, average load, is developed from item(s) of moderately concentrated weight which are packed directly into the shipping container and provide partial support to all panels thereof. Also item(s) prepackaged by wrapping or by positioning in partitions, cells or paperboard boxes, or by other means which provide support to all panels of the shipping container.

3.18.1.15.2.1 Examples of Type 2, average loads. Items packaged in boxes or cans which are not prepackaged in an interior container; bottles individually separated one from the other by cells or partitions.

3.18 1.15.3 Type 3, difficult load. A Type 3, difficult load is developed from item(s) which require a high degree of protection to prevent puncture,

Source: https://assist.dla.mil -- Downloaded: 2016-10-21T11:02Z
Check the source to verify that this is the current version before use.

shock, or distortion of the shipping container. Also item(s) which do not provide complete support to the panels of the shipping container.

3.18.1.15.3.1 Examples of Type 3, difficult loads. Wrenches, long bolts, and rods which exert concentrated forces on the shipping container; motors, telephones, typewriters, drop forgings, rivets, hardware, or other items that are random packed in bulk. Fragile or delicate items requiring special protection.

3.18.1.16 Modular containers. Modular containers are families of containers designed to be assembled into standard unit loads.

3.19 Container Design Retrieval System (CDRS). A program to provide a DOD centralized, automated data base system for storing, retrieving and analyzing container designs and test information concerning specialized containers. The purpose of the CDRS is to avoid duplication in container designs, minimize the number of new container designs being developed, and promote reuse of existing DOD specialized containers for new item development and procurement. CDRS is governed by MIL-STD-1510.

4. GENERAL REQUIREMENTS

4.1 General. When packaging requirements are to be developed, they shall be developed in accordance with the requirements of this section, section 5 and Appendices B, C, D, E and, when specified, Appendix F of this standard for the level(s) specified (see 6.1). The developed packaging requirements shall, when specified, be recorded on DD Form 2326, prepared in accordance with Data Item Description DI-L-7135 (see 6.1). When an item has been determined to be in the special group category, a Special Packaging Instruction shall be required and prepared in accordance with Data Item Description DI-L-7136 (see 6.3).

4.2 Standards precedence. If this standard is cited for use and no specific packaging details or data requirements are contained in the contract, Appendix C and other applicable sections and appendices of this standard shall govern in the establishment of packaging for the DOD materiel.

4.3 Specially designed containers. The design, development, test and evaluation of shipping containers for major equipment items and items which are subject to repair or technical order compliance (TOC) shall be in accordance with the requirements specified by the acquiring activity. If not specified by the contracting officer, MIL-STD-1367 may be used as a guide.

4.4 Container Design Retrieval System (CDRS). When developing the packaging requirements of 4.1 and it has been determined that a specialized long life container is required for the reasonably firm configured item, CDRS services shall, when contractually required, be solicited through the Contracting Officer in accordance with MIL-STD-1510 before initiating detailed engineering designs of the needed container. The container search shall be conducted using the direction contained in Data Item Description DI-L-2163 (see 6.3). When a new container design or modification of an existing design will satisfy the needs for the item and such design is used, details of the new or modified design shall be prepared and submitted to the CDRS in accordance with the direction contained in Data Item Description DI-L-2162 (see 6.3).

Source: https://assist.dla.mil - Downloaded: 2016-10-21T11:02Z
Check the source to verify that this is the current version before use.

4.5 Shipping containers. Shipping container selection other than multi-application or specially designed containers shall be made in accordance with Appendix C, Table VII. Selection of multiapplication containers shall be in accordance with Appendix E.

4.6 Parcel Post shipments. Parcel Post shipments shall meet all requirements specified in postal service requirements.

5. DETAILED REQUIREMENTS

5.1 General considerations. Preservation shall be of minimum cost consistent with required performance. Unit packs shall be designed to conserve weight and cube while retaining the protection required and enhancing standardization. The preservation methods selected shall provide the necessary protection dictated by the designated degree of protection; i.e., A, B, or C. If the item is irregular in shape, that is, has sharp projections, knobs, handles, etc., the projection shall be covered and smoothed out to fill all voids with suitable material and fixed in place to prevent damage to the wraps, barrier or unit containers.

5.1.1 Use of unit containers. The unit pack shall provide protection from shock and vibration and other hazards during shipment/reshipment. When the method or sub-method of MIL-P-116 requires an outer container and it is other than a bag, the unit container for Level A shall be weather resistant. When the unit container serves as the shipping container, the container and its suspension or cushioning systems, which make up the unit pack, shall protect the item(s) from the hazards encountered during shipping, handling, and storage.

5.1.2 Unit container size. Flexible and rigid containers shall be of a size to provide a snug fit for the wrapped and cushioned item. The sequence of length, width, and depth for ordering purposes shall be in accordance with the applicable container specification. When PPP-B-636 containers are required, an appropriate standard size shall be selected from Table I, Appendix H or from those listed in MIL-STD-1187. The wrapped and cushioned item shall fill at least 80 percent of the container. Appropriate dunnage shall be used to fill voids. When a standard size PPP-B-636 container which will be at least 80 percent filled by the wrapped and cushioned item is not available, the size shall be such that the container provides a snug fit for the wrapped and cushioned item.

5.2 Excess and residual material.

5.2.1 Serviceable excess and residual material. Serviceable or Technical Order Compliance (TOC) excess and residual part(s) removed from the package as received and to be returned to the Government, shall be protected as determined by this standard. Unless provided by the acquiring activity, the quantity per unit pack (QUP) shall be determined in accordance with Appendix G.

5.2.2 Repairable excess and residual parts. Repairable excess and residual part(s) for which packaging has not been stipulated by the acquiring activity shall be packaged to afford adequate protection as required to prevent further deterioration due to rust, corrosion, or physical damage. Unless otherwise

Source: https://assist.dla.mil -- Downloaded: 2016-10-21T11:02Z
Check the source to verify that this is the current version before use.

specified by the acquiring activity, the quantity per unit pack (QUP) shall be one.

5.3 Other general considerations.

5.3.1 Shock and vibration absorption. Shock and vibration absorption shall be provided by cushioning materials or devices that adequately protect the contents and packaging components from physical damage during handling, shipment, and storage. The cushioning medium shall be placed, with relation to other parts of the unit or exterior pack, as close to the contents as practicable; however, a noncorrosive wrap, when required, shall be placed between the item and all corrosive type cushioning media. Cushioning material shall conform to the documents listed in Appendix A and shall be governed by the respective document.

5.3.2 Determination of item fragility. Fragility factors in the nonoperating state, established in item specifications, shall be used to establish the maximum energy which will be permitted to reach the item during transportation and handling. When fragility factors are not available or established, use criteria of Table I of this standard to approximate G factor. It shall be necessary to provide a means of damping induced energy to or below the specification limits. Caution shall be taken to ensure that there are no additional components installed which lower the item fragility rating.

5.3.3 Energy damping methods and package cushioning design. Establishment and design of the energy damping methods and package cushioning media shall be in accordance with MIL-HDBK-304.

5.3.4 Fire retardant materials. Fire retardant and fire resistant materials, that exist in specifications, shall be used in lieu of non-fire retardant variety for shipment to ships or stock, unless otherwise specified.

5.3.5 Loose fill material. Loose fill materials are prohibited for shipboard deliveries or those that will be delivered to ships intact.

5.3.6 Quantity per unit pack. Unless otherwise specified by the acquiring activity, the QUP shall be determined in accordance with Appendix G.

5.3.7 Kits. Unless otherwise specified, requirements for kits shall be developed in accordance with Appendix D.

5.4 Marking. All Level A, B, and C unit, intermediate and exterior packs and unitized loads shall be marked in accordance with MIL-STD-129 and additional marking requirements as specified by the acquiring activity (see 6.1).

5.5 Packaging design validation provisions. Unless otherwise specified in the contract or order, the contractor shall be required to perform packaging design validation tests on selective and special group items in accordance with Appendix B unless one of the following conditions exist:

a. Furnished data. Detailed packaging instructions or design are furnished by the acquiring activity.

Source: https://assist.dla.mil -- Downloaded: 2016-10-21T11:02Z
Check the source to verify that this is the current version before use.

b. Previous test records. The contractor has previous successful test records for the same or similar item.

c. Approved engineering data. The contractor has engineering data which has been approved by the cognizant DoD activity and indicates that the proposed packaging design will successfully meet the requirements of the contract.

d. Multiapplication containers. Items meet the weight, dimension and fragility requirements of Table I of Appendix E and are packed in multiapplication containers.

e. Level C. Level C protection is specified.

f. Contractor shipping data. The contractor has historical shipping data confirming adequate protection is provided using the same or upgraded packaging.

5.6 Dummy load. When approved by the acquiring activity, dummy loads may be substituted for actual units for instrumented rough handling tests. (See Appendix B.)

5.7 Guidance in selecting packaging methods. Guidance for selecting methods and details for the packaging of DOD materiel is found in Appendix C of this document.

5.8 Procedural requirements. When specified, the procedural packaging requirements contained in Appendix F shall be followed (see 6.1).

5.9. Quality assurance provisions.

5.9.1 Responsibility for inspection. Unless otherwise specified in the contract or purchase order, the contractor is responsible for the performance of all inspection requirements as specified herein. Except as otherwise specified in the contract or order, the contractor may use his own or any other facilities suitable for the performance of the inspection requirements specified herein, unless disapproved by the Government. The Government reserves the right to perform any of the inspections set forth where such inspections are deemed necessary to assure supplies and services conform to prescribed requirements.

5.9.2 System requirements. Unless otherwise specified in the contract or purchase order, the contractor shall provide and maintain an effective packaging quality assurance system acceptable to the Government. A current written description of the system shall be submitted to the Government Quality Assurance representative prior to initiation of production packaging. The written description shall be considered acceptable when as a minimum it provides the quality assurance required by this and other standard applicable documents. When the contract or purchase order does not require Government approved written description, the quality assurance provisions of this standard shall apply.

Source: https://assist.dla.mil -- Downloaded: 2016-10-21T11:02Z
Check the source to verify that this is the current version before use.

5.9.3 Government verification. All quality assurance operations performed by the contractor shall be subject to Government verification at unscheduled intervals. Verification shall consist of:

a. surveillance of the operations to determine that the practices, methods, and procedures of the written inspection plan are being properly applied, and

b. Government packaging inspection to measure the quality of the packs offered for acceptance

5.9.3.1 Deviation. Deviation from the prescribed or agreed-upon procedures or instances of poor practices shall be immediately called to the attention of the contractor. Failure of the contractor to promptly correct the deficiencies discovered shall be cause for suspension of acceptance until correction has been made. To avoid interference with operations, the contractor shall designate a responsible official or officials to whom the Government will report such instances.

5.9.4 Quality conformance inspection.

5.9.4.1 Materials. Except for materials which have been Government inspected at the source, all materials to be used in the packaging shall be inspected in accordance with the applicable material specification, or certified inspection and laboratory test reports shall be furnished which show that material, as furnished, conforms to the detailed specification.

5.9.4.2 Preservation inspection. Preservation inspection shall be performed by the contractor and shall consist of the inspection and quality conformance requirements specified in the applicable Packaging Inspection Provisions in Table II.

5.9.4.2.1 Lot formation. A lot shall consist of items having the same stock number from an identifiable packaging period and submitted at one time for inspection.

5.9.4.2.2 Sampling for examination. Sampling for examination shall be in accordance with MIL-STD-105, using a single sampling plan. Acceptance or rejection shall be based on the classification of defects and Acceptable Quality Level (AQL) of 4.0 percent defective.

5.9.4.2.3 Sampling for tests. From each lot that has passed the examination specified in 5.9.4.2.2, a representative sample shall be selected in accordance with inspection level S-4 of MIL-STD-105. Acceptance or rejection shall be based on an AQL of 4.0 percent defective. The samples selected shall be subjected to the Group B quality conformance tests specified in MIL-P-116.

5.9.4.3 Packing inspection. Packing inspection shall be performed by the contractor and shall consist of the examination specified in the applicable Packaging Inspection Provisions in Table II.

Source: https://assist.dla.mil -- Downloaded: 2016-10-21T11:02Z
Check the source to verify that this is the current version before use.

5.9.4.3.1 Lot formation. A lot shall consist of all packs made of the same materials and during an identifiable period and submitted at one time for inspection.

5.9.4.3.2 Sampling for examination. Sampling for examination shall be in accordance with MIL-STD-105, using a single sampling plan. Acceptance or rejection shall be based on the classification of defects and AQL of 4.0 percent defective.

5.9.5 Government acceptance. Acceptance by the Government inspector of the preservation and packing of each shipment of the item being procured shall be based on process surveillance, review of the contractor's inspection records, and sufficient verification inspection to substantiate the records. The Government inspector shall conduct visual inspection on a spot check basis to assure correct marking of the packs prior to granting approval for shipment.

5.9.6 Control test. When specified, a control test shall be required (see 6.1).

5.9.6.1 Responsibility. The contractor shall be responsible for performing the control test on the completed pack as packed, ready for shipment.

5.9.6.2 Frequency. Control test samples shall be selected at the rate of one per month or two from each 500 produced, whichever occurs first, but not more than two samples shall be selected in any given 30 day period.

5.9.6.3 Tests. Control test samples shall be subjected to the rough handling test of Appendix B, 40.

5.9.6.4 Failure. Failure of a control test sample to pass any specified test shall be cause for the Government to refuse to accept subsequent lots for shipment until it has been proved to the satisfaction of the Government that the faults revealed by the tests have been corrected.

5.9.7 Quality control program or inspection system requirements. When contracts include provisions for the establishment by the contractor of a quality control program in accordance with MIL-Q-9858 or an inspection system in accordance with MIL-I-45208 and the approved program or system includes samplings and inspection requirements to insure that packs meet the requirements of this standard, that program or system shall be used in lieu of the sampling and inspection provisions of this standard.

6. CONTRACTUAL REQUIREMENTS

6.1 General requirements. Contract documents shall specify the following:

a. Title, number, revision and date of this standard.

b. Levels of preservation and packing required (see 4.1 and Appendix D, 20 and 40.)

c. Labeling or other special marking required (see 5.4).

Source: https://assist.dla.mil -- Downloaded: 2016-10-21T11:02Z
Check the source to verify that this is the current version before use.

d. Items of data required (see 4.1, 4.4, 6.3 and Appendix J)

e. If prototype pack is required (see 6.2).

f. If commercial expendable pallets may be used (see Appendix F, 20.5.8.2.2)

g. If a control test is required (see 5.9.6).

h. If the procedural requirements of Appendix F are to be followed (see Appendix F).

6.2 Prototype pack. When a prototype pack is required for inspection and approval, the contract shall specify the following provision for prototype pack inspection. When a contractor is in continuous production of the commodity from contract to contract, consideration should be given to waive the prototype pack inspections. If inspection is required, indicate:

a. If prototype pack inspections are conducted at the contractor's plant or a government approved laboratory, an inspection report shall be forwarded to the acquiring activity for verification.

b. That the approval of prototype pack samples or the waiving of the prototype pack inspection shall not relieve the contractor of his obligation to fulfill all other requirements of the specification and contract.

c. That testing shall be witnessed by a government packaging specialist when appropriate.

6.3 Contract data requirements. When the DD Form 1423 cites Data Item Descriptions listed in Appendix J for packaging and requires the contractor to develop and deliver data, the required data shall be as stated in the applicable DID (see 6.1).

7. NOTES

7.1 Supersession. The following documents will be superseded in consonance with appropriate implementing directives of the MIL-STD-2073 system:

MIL-STD-647	Packaging Standards, Preparation and Use of
MIL-STD-794E	Parts and Equipment, Procedures for Packaging of
MIL-STD-834C	Packaging Data Forms, Instructions for Preparation and Use of
MIL-P-14232E	Parts, Equipment and Tools for Army Material, Packaging of

Source: https://assist.dla.mil -- Downloaded: 2016-10-21T11:02Z
Check the source to verify that this is the current version before use.

Custodians
Army - SM
Navy - AS
Air Force - 43
DLA - DH

Preparing activity:
Navy - AS
(Project No. PACK-0605)

Review Activities
Army - AV, AT, CR, GL, ME, MI, AR, AL, EA
Navy - OS, SA, EC, YD, MC, CG, SH
Air Force - 10, 11, 13, 18, 19, 99, 69
DLA - GS, CS, ES, PS, IP, IS, DP, DM, CT, SS, LS

Source: https://assist.dla.mil -- Downloaded: 2016-10-21T11:02Z
Check the source to verify that this is the current version before use.

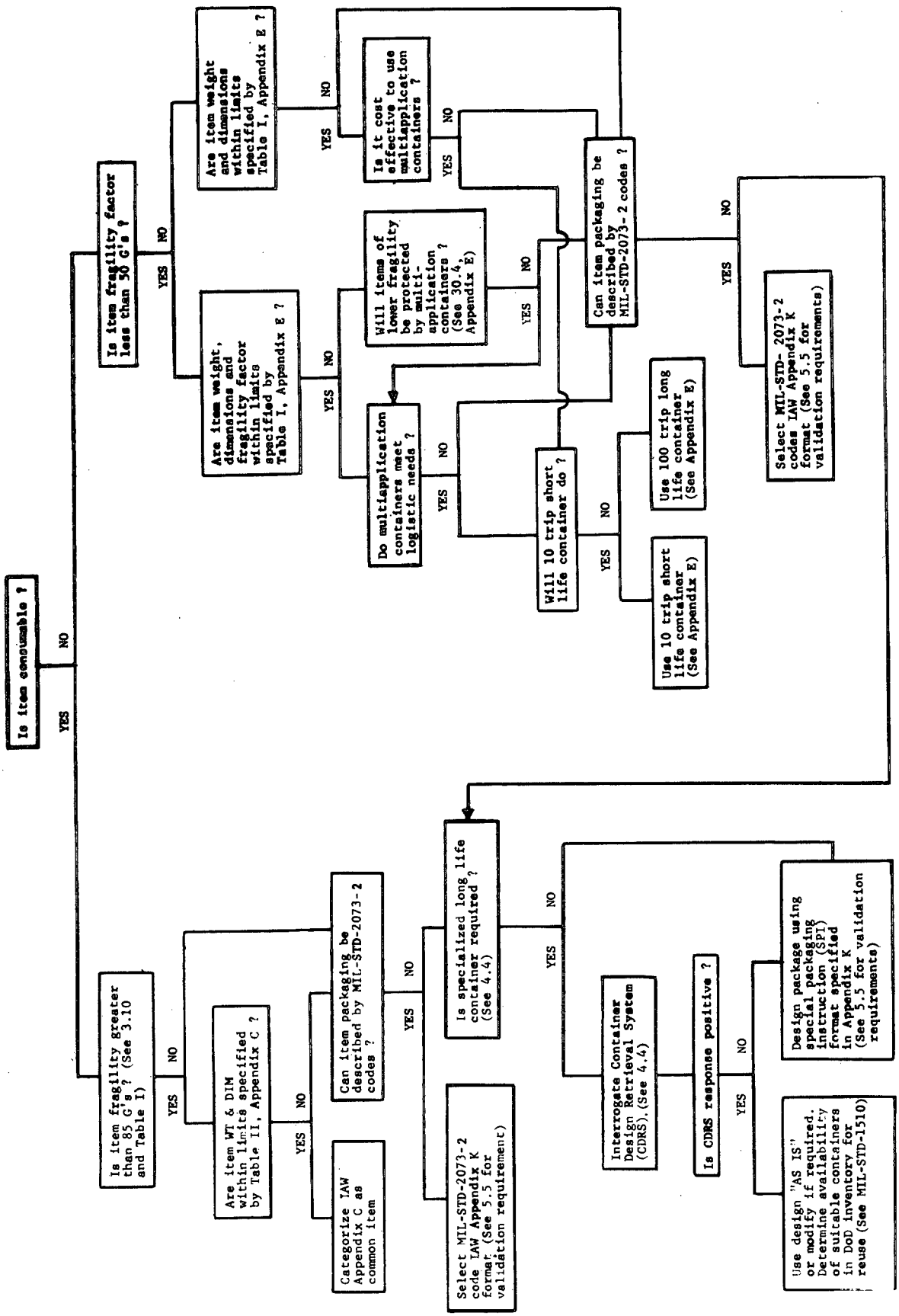

FIGURE 1. Decision chart guide in use of MIL-STD-2073.

Source: https://assist.dla.mil -- Downloaded: 2016-10-21T11:02Z
Check the source to verify that this is the current version before use.

TABLE I. Approximate fragility factors

15 G's or less

Some accelerometers and inertial guidance platforms.

15 - 24 G's

Missile guidance systems, precision aligned test equipment, gyros, some inertial guidance platforms, some altimeters.

25 - 39 G's

Mechanically shock-mounted instruments (shock mounts secured prior to packaging provided for in-service use only), vacuum tube electronics equipment, some altimeters.

40 - 59 G's

Aircraft accessories such as constant speed drives; electric typewriters, most solid state electronics equipment, oscilloscopes, computer components.

60 - 84 G's

TV receivers, aircraft accessories such as generators, starters; some solid state electronics equipment, some circuit cards and some terminal boards.

85 - 110 G's

Refrigerators, appliances, some electromechanical equipment, some circuit cards, air duct hoses, attenuators, cable assemblies, some capacitors, gears, housings, receivers, couplers, some resistors, some terminal boards.

110 + G's

Machinery, aircraft structural parts such as landing gears, control surfaces, hydraulic equipment, washers, latch pins, plates, screw brackets, bushings, gaskets, cable assemblies, some capacitors, coupling cover drive discs, fittings, some resistors, rings, rollers, shafts, supports.

Source: https://assist.dla.mil -- Downloaded: 2016-10-21T11:02Z
Check the source to verify that this is the current version before use.

Criteria Major defect, AQL 4.0 percent defective	Method of inspection	Method/Submethod																							
		I	IA-5	IA-6	IA-8	IA-13	IA-14	IA-15	IA-16	IB-1	IB-2	IC-1	IC-2	IC-3	IC-6	IC-7	IC-9	IC-10	II a	II b	II c	II d	II e	II f	III
Cleaning material contaminated	Visual	X	X	X	X	X	X	X	X	X	X	X	X	X	X	X	X	X	X	X	X	X	X	X	X
Item not completely cleaned	Visual	X	X	X	X	X	X	X	X	X	X	X	X	X	X	X	X	X	X	X	X	X	X	X	X
Item damaged by action of cleaning process	Visual	X	X	X	X	X	X	X	X	X	X	X	X	X	X	X	X	X	X	X	X	X	X	X	X
Item contaminated (handling with bare hands after cleaning)	Visual	X	X	X	X	X	X	X	X	X	X	X	X	X	X	X	X	X	X	X	X	X	X	X	X
Process incomplete (omission of final rinse)	Visual	X	X	X	X	X	X	X	X	X	X	X	X	X	X	X	X	X	X	X	X	X	X	X	X
Cleaning materials not as specified	Visual	X	X	X	X	X	X	X	X	X	X	X	X	X	X	X	X	X	X	X	X	X	X	X	X
Item not completely dry	Visual	X	X	X	X	X	X	X	X	X	X	X	X	X	X	X	X	X	X	X	X	X	X	X	X
Item damaged by air blast, overheating	Visual	X	X	X	X	X	X	X	X	X	X	X	X	X	X	X	X	X	X	X	X	X	X	X	X
Contaminated compressed air (moisture)	Visual	X	X	X	X	X	X	X	X	X	X	X	X	X	X	X	X	X	X	X	X	X	X	X	X
Contaminated wiping cloths	Visual	X	X	X	X	X	X	X	X	X	X	X	X	X	X	X	X	X	X	X	X	X	X	X	X
Items not thoroughly drained	Visual	X	X	X	X	X	X	X	X	X	X	X	X	X	X	X	X	X	X	X	X	X	X	X	X
Preservative not as specified	Visual	X	X	X	X	X	X	X	X		X	X	X	X	X	X	X	X	X	X	X	X	X	X	
Incomplete coverage of preservative	Visual	X	X	X	X	X	X	X	X		X	X	X	X	X	X	X	X	X	X	X	X	X	X	
Excessive perservative	Visual	X	X	X	X	X	X	X	X		X	X	X	X	X	X	X	X	X	X	X	X	X	X	
Wrap not as specified	Visual	X	X		X	X	X	X	X		X	X	X	X	X		X	X	X	X	X	X	X	X	X
Cushioning material and/or thickness not as specified	Visual	X	X		X	X	X	X	X	X	X	X	X	X	X	X	X	X	X	X	X	X	X	X	X
Improper application of cushioning	Visual	X	X		X	X	X	X	X	X	X	X	X	X	X	X	X	X	X	X	X	X	X	X	X
Improper amount of desiccant (formula of MIL-P-116)	Visual																		X	X	X	X	X	X	
Desiccant contacting item	Visual																		X	X	X	X	X	X	
Unit container not as specified	Visual	X	X	X	X	X	X	X	X			X	X	X	X				X	X	X	X	X	X	X
Plastic material not as specified	Visual															X	X	X							
Improper seal or closure of unit containers	Visual	X	X	X	X	X	X	X	X			X	X	X	X	X	X	X	X	X	X	X	X	X	X
Unit container corners not blunted	Visual						X	X					X							X			X		
Excessive looseness in unit container	Shake	X	X		X	X	X	X				X	X	X	X	X	X	X		X	X	X	X	X	X
Window not as specified	Visual																		X						
Excessive air within unit container	Visual				X		X	X				X	X	X		X	X	X	X	X	X		X		
Perforation or tear lines omitted	Visual															X									
Coating thickness less than (0.025" for items less 1/4 lb. 0.05" for items over ¼ lb)	Measure									X	X														
Coating not uniform thickness	Visual									X	X														
Marking omitted, incorrect, or illegible 1/	Visual	X	X	X	X	X	X	X	X	X	X	X	X	X	X	X	X	X	X	X	X	X	X	X	X
Humidity indicator not properly placed	Visual																		X	X	X	X	X	X	
Closure edge of flexible barrier lacks sufficient material for reclosure	Visual																		X	X	X	X	X	X	

Notes: 1/ When a container for a unit pack is used also as an exterior pack, the marking applicable to shipping containers as specified in MIL-STD-129 shall be used in lieu of unit pack markings.

2/ MIL-STD-129 markings must be applied on barriers when used with outer container or wrap.

TABLE II. Packaging inspection provisions for methods/submethods of MIL-P-116.

Source: https://assist.dla.mil Downloaded: 2016-10-21T11:02Z
Check the source to verify that this is the current version before use.

APPENDIX A

APPLICABLE DOCUMENTS

10. Scope.

10.1 Purpose. This appendix is a list of material and container documents referenced in this standard. Because of the voluminous listings, it has been considered more practical to list them in this appendix.

10.2 Use. Unless otherwise specified, the following specifications, standards and handbooks of the issue listed in the current Department of Defense Index of Specifications and Standards (DoDISS) and the supplement thereto (if applicable) form a part of this standard to the extent specified herein.

20. Specifications and standards. Material and container documents are listed in alphanumeric sequence with Federal and Military Specifications listed before Federal and Military Standards. This list also indicates where the document is referenced within the MIL-STD-2073 series.

SPECIFICATIONS FEDERAL		MIL-STD-2073-1	-2
G-C-116	Card, Tabulating	X	
L-P-378	Plastic Sheet and Strip, Thin Gauge, Polyolefin	X	X
O-E-760	Ethyl Alcohol (Ethanol) Denatured Alcohol, Proprietary Solvents and Special Industrial Solvents	X	
O-M-232	Methanol (Methyl Alcohol)		X
P-D-680	Dry Cleaning Solvent	X	
HH-I-585	Insulation, Thermal (Vermiculite)		X
NN-P-71	Pallet, Material Handling, Wood, Stringer Construction, 2 Way and 4 Way (Partial)	X	
QQ-A-1876	Aluminum Foil		X
QQ-S-781	Strapping, Steel, and Seals	X	
RR-C-271	Chains and Attachments, Welded, and Weldless		X
TT-P-664	Primer Coating, Synthetic, Rust-inhibiting, Lacquer Resisting		X

Source: https://assist.dla.mil -- Downloaded: 2016-10-21T11:02Z
Check the source to verify that this is the current version before use.

APPENDIX A

SPECIFICATIONS FEDERAL		MIL-STD-2073-1	-2
TT-T-291	Thinner, Paint, Mineral Spirits, Regular and Odorless	X	
UU-B-36	Bags, Paper (Grocers)		X
UU-C-282	Chipboard	X	X
UU-P-268	Paper, Kraft, Wrapping		X
UU-P-553	Paper, Wrapping, Tissue	X	X
UU-S-48	Sack, Shipping, Paper		X
UU-T-81	Tags, Shipping and Stock		X
VV-B-680	Brake Fluid, Automotive		X
VV-L-800	Lubricating Oil, General Purpose, Preservative, (Water Displacing, Low Temperature)	X	X
CCC-C-440	Cloth, Cheesecloth, Cotton, Bleached and Unbleached	X	
JJJ-C-561	Cotton, Purified (Sterile) and Nonsterile	X	
MMM-A-178	Adhesive, Paper, Label, Water Resistant	X	
MMM-A-250	Adhesive, Water-Resistant (For Closure of Fiberboard Boxes)	X	
MMM-A-260	Adhesive, Water-Resistant (For Sealing Waterproof Paper)		X
NNN-P-40	Paper, Lens	X	X
PPP-B-20	Bag, Cotton, Mailing		X
PPP-B-26	Bag, Plastic (General Purpose)	X	
PPP-B-35	Bags, Textile, Shipping, Burlap, Cotton and Waterproof Laminated		X
PPP-B-140	Battery, Storage, Industrial, Preparation for Shipment and Storage of		X

Source: https://assist.dla.mil -- Downloaded: 2016-10-21T11:02Z
Check the source to verify that this is the current version before use.

APPENDIX A

SPECIFICATIONS FEDERAL		MIL-STD-2073-1	-2
PPP-B-566	Boxes, Folding, Paperboard	X	X
PPP-B-576	Boxes, Wood, Cleated, Veneer, Paper Overlaid	X	X
PPP-B-585	Boxes, Wood, Wirebound	X	X
PPP-B-587	Boxes, Wood, Wirebound, Pallet Type		X
PPP-B-591	Boxes, Fiberboard, Wood-Cleated	X	X
PPP-B-601	Boxes, Wood, Cleated-Plywood	X	X
PPP-B-621	Boxes, Wood, Nailed and Lock-Corner	X	X
PPP-B-636	Boxes, Shipping, Fiberboard	X	X
PPP-B-638	Boxes, Liners and Sleeves, Fiberboard, Knocked-Down, Flat, Packing Of		X
PPP-B-640	Boxes, Fiberboard, Corrugated, Triple-Wall	X	X
PPP-B-665	Boxes, Paperboard, Metal Edged and Components	X	X
PPP-B-676	Boxes, Setup	X	X
PPP-B-1055	Barrier Material, Waterproofed, Flexible	X	X
PPP-B-1364	Box, Corrugated Fiberboard, High Strength, Weather-Resistant, Double-Wall		X
PPP-B-1672	Box, Shipping, Reusable With Cushioning	X	X
PPP-B-1806	Barrel and Kegs, Wood Slack		X
PPP-C-96	Can, Metal, 28-Gage and Lighter		X
PPP-C-186	Containers, Packaging and Packing for Drugs, Chemicals and Pharmaceuticals		X

Source: https://assist.dla.mil -- Downloaded: 2016-10-21T11:02Z
Check the source to verify that this is the current version before use.

APPENDIX A

SPECIFICATIONS FEDERAL		MIL-STD-2073-1	-2
PPP-C-795	Cushioning Material, Flexible, Cellular, Plastic Film, For Packaging Applications	X	X
PPP-C-843	Cushioning Material, Cellulosic		X
PPP-C-850	Cushioning Material, Polystryene, Expanded, Resilient (For Packaging Uses)		X
PPP-C-1120	Cushioning Material, Uncompressed Bound Fiber for Packaging		X
PPP-C-1683	Cushioning Material, Expanded Polystyrene Loose Fill Bulk (For Packaging Application)		X
PPP-C-1752	Cushioning Material, Unicellular Polyethylene Foam, Flexible	X	X
PPP-C-1797	Cushioning Material, Resilient, Low Density, Unicellular, Polypropylene Foam	X	X
PPP-C-1842	Cushioning Material, Plastic, Open Cell (For Packaging Applications)	X	X
PPP-C-2020	Chemicals, Liquid, Dry and Paste: Packaging of		X
PPP-D-705	Drum, Shipping and Storage, Steel (16 and 30 Gallon Capacity)		X
PPP-D-711	Drum, Metal Shipping, Steel, Lightweight (55-Gallon)	X	X
PPP-D-723	Drums, Fiber	X	X
PPP-D-729	Drums, Shipping and Storage, Steel, 55 Gallon (208 liters)		X
PPP-D-732	Drum, Metal, 55 Gallon Reconditioned (For Shipment of Noncorrosive Material)	X	

Source: https://assist.dla.mil -- Downloaded: 2016-10-21T11:02Z
Check the source to verify that this is the current version before use.

APPENDIX A

SPECIFICATIONS FEDERAL		MIL-STD-2073-1	-2
PPP-F-320	Fiberboard, Corrugated and Solid, Sheet Stock (Container Grade) and Cut Shapes	X	X
PPP-G-460	Glass Containers, Filled and Closed, Packaging and Packing of		X
PPP-H-1581	Hardware (Fasteners and Related Items); Packaging of		X
PPP-P-40	Packaging and Packing of Hand Tools		X
PPP-P-291	Paperboard, Wrapping and Cushioning		X
PPP-P-704	Pail, Metal (Shipping, Steel, 1 through 12 Gallon)		X
PPP-P-1132	Packaging and Packing of Woolen, Worsted and Wool Blend (Synthetic Fiber, Cotton) Fabrics		X
PPP-P-1133	Packaging and Packing of Synthetic Fiber Fabrics		X
PPP-P-1134	Packaging and Packing of Cotton and Cotton-Synthetic Fiber Blend Fabrics (Excluding Duck Fabrics)		X
PPP-P-1135	Packaging and Packing of Duck Fabrics (Cotton, Synthetic Fiber; Cotton-Synthetic Fiber Blends)		X
PPP-P-1136	Packaging and Packing of Coated (Plastic, Rubber) and Laminated Fabrics		X
PPP-P-1892	Paint, Varnish, Lacquer and Related Materials; Packaging, Packing and Marking of		X
PPP-S-30	Sack, Shipping, Paper (Cushioned)	X	X
PPP-S-760	Strapping, Nonmetallic (and Connectors)	X	
PPP-T-42	Tape, Packaging/Masking, Paper	X	

Source: https://assist.dla.mil -- Downloaded: 2016-10-21T11:02Z
Check the source to verify that this is the current version before use.

APPENDIX A

SPECIFICATIONS FEDERAL		MIL-STD-2073-1	-2
PPP-T-45	Tape, Gummed, Paper, Reinforced and Plain for Sealing and Securing	X	X
PPP-T-60	Tape, Packaging, Waterproof	X	X
PPP-T-76	Tape, Packaging, Paper (For Carton Sealing)	X	X
PPP-T-97	Tape, Pressure-sensitive Adhesive, Filament Reinforced	X	
PPP-T-495	Tube, Mailing and Filing		X
PPP-T-680	Tape, Pressure Sensitive Adhesive, Packaging and Packing Of		X
PPP-T-681	Tape, Gummed, Packaging and Packing Of		X
PPP-V-205	Veneer, Paper Overlaid, Container Grade		X
MILITARY			
MIL-V-3	Valve, Fittings, and Flanges (Except for Systems Indicated Herein), Packaging Of		X
MIL-T-4	Tire, Pneumatic, and Inner Tube, Pneumatic Tire, Tire With Flap; Packaging and Packing Of		X
MIL-E-75	Electron Tube, Packing of		X
MIL-C-104	Crate, Wood, Lumber and Plywood Sheathed, Nailed and Bolted	X	X
MIL-P-116	Preservation, Methods of	X	X
MIL-B-117	Bag, Sleeve and Tubing-Interior Packaging	X	X
MIL-B-121	Barrier Material, Grease-proofed, Waterproofed, Flexible	X	X
MIL-P-130	Paper, Wrapping, Laminated and Creped	X	X
MIL-B-131	Barrier Material, Watervapor-proof, Flexible, Heat-Sealable		X

Source: https://assist.dla.mil -- Downloaded: 2016-10-21T11:02Z
Check the source to verify that this is the current version before use.

APPENDIX A

SPECIFICATIONS MILITARY		MIL-STD-2073-1	-2
MIL-P-149	Plastic Coating Compound, Strippable (Hot Dipping)		X
MIL-V-173	Varnish, Moisture and Fungus Resistant (For Treatment of Communications, Electronic, and Associated Equipment)		X
MIL-B-197	Bearings, Antifriction, Associated Parts and Subassemblies; Preparation For Delivery Of		X
MIL-B-208	Battery, Storage, Lead Acid, Automotive and Navy, Portable, (Except Aircraft); Packaging and Packing Of		X
MIL-C-372	Cleaning Compound, Solvent, for Bore of Small Arms and Automatic Aircraft Weapons	X	
MIL-H-775	Hose, Hose Assemblies, Rubber, Plastic, Fabric, or Metal		X
MIL-L-2105	Lubricating Oil, Gear, Multi-purpose		X
MIL-F-2312	Felt, Hair or Wool, Mildew Resistant, and Moisture Resistant, Treatment for		X
MIL-B-2427	Box, Ammunition Packing, Wood, Nailed	X	
MIL-P-2845	Packaging of Main Propulsion Shafting Bearings, Boat and Ship Propellers and Associated Repair Parts		X
MIL-C-3098	Crystal Units, Quartz, General Specification for		X
MIL-L-3150	Lubricating Oil, Preservative, Medium		X
MIL-B-3180	Boiler and Related Equipment, Packaging of		X

Source: https://assist.dla.mil -- Downloaded: 2016-10-21T11:02Z
Check the source to verify that this is the current version before use.

APPENDIX A

SPECIFICATIONS MILITARY		MIL-STD-2073-1	-2
MIL-P-3184	Packaging of Machinery, Deck and Vehicle Mounted With Associated Equipment and Repair Parts		X
MIL-F-3222	Floodlights and Lantern, Packaging Of		X
MIL-H-3280	Hoist, Chain, Manually Operated, Packaging Of		X
MIL-F-3296	Forges, Furnaces, and Ovens (Exclusive of Space Heating and Cooking), Packaging Of		X
MIL-P-3420	Packaging Materials, Volatile Corrosion Inhibitor Treated, Opaque	X	X
MIL-L-3454	Life Preservers, Packaging of		X
MIL-S-3534	Surveying Instruments and Accessories, Packaging Of		X
MIL-C-3600	Compressor, Air and Gas (Except Oxygen), Packaging Of		X
MIL-P-3684	Printing, Duplicating. and Book Binding Equipment, Packaging Of		X
NIL-C-3774	Crate, Wood, Open, 12,000 and 16,000 Pound Capacity	X	X
MIL-A-3816	Abrasives and Abrasive Products, Packaging Of		X
MIL-B-3865	Block, Rope, Tackle, Packaging Of		X
MIL-W-3903	Wire Rope Assembly, Single Leg		X
MIL-W-3944	Non-Ferrous Products (Other Than Aluminum, Magnesium, Copper or Their Alloys), Packaging and Packing Of		X
MIL-C-3955	Cans, Composite, Spirally Wound	X	X
MIL-C-4116	Container, Shipping, Reusable, Wood, Aircraft Engines		X

Source: https://assist.dla.mil -- Downloaded: 2016-10-21T11:02Z
Check the source to verify that this is the current version before use.

APPENDIX A

SPECIFICATIONS MILITARY		MIL-STD-2073-1	-2
MIL-C-4150	Case, Transit and Storage, Waterproof and Watervaporproof	X	X
MIL-S-4473	Shielding of Magnetron Tubes and Magnets for Air Shipment		X
MIL-P-4861	Packing, Preformed, Rubber, Packaging Of		X
MIL-W-5013	Wheel and Brake Assemblies, Aircraft		X
MIL-C-5501	Cap and Plug, Protective, Dust and Moisture Seal	X	X
MIL-C-5584	Container, Shipping and Storage, Metal Reusable		X
MIL-H-5606	Hydraulic Fluid, Petroleum Base, Aircraft, Missile and Ordnance		X
MIL-E-5607	Engine, Gas Turbine, Preparation For Storage and Shipment Of, Process For	X	
MIL-P-5610	Parachute Assembly and Subassemblies, Packaging and Packing Of		X
MIL-B-5806	Box, Shippping and Storage, Helicopter Blade		X
MIL-D-6054	Drum, Metal, Shipping and Storage	X	X
MIL-D-6055	Drum, Metal, Reusable, Shipping and Storage (Cap. From 88 to 510 Cubic Inches)		X
MIL-E-6058	Engines, Aircraft, Reciprocating, Preparation for Shipment and Storage of		X
MIL-P-6063	Packaging of Batteries, Storage, Charged and Dry-Uncharged and Moist, General Specification For		X
MIL-P-6074	Preservation, Packaging and Packing of Propellers, Propeller Spares, and Propeller Accessories		X
MIL-L-6081	Lubricating Oil, Jet Engine		X

Source: https://assist.dla.mil -- Downloaded: 2016-10-21T11:02Z
Check the source to verify that this is the current version before use.

APPENDIX A

SPECIFICATIONS MILITARY		MIL-STD-2073-1	-2
MIL-L-6082	Lubricating Oil, Aircraft Reciprocating Engine (Piston)		X
MIL-H-6083	Hydraulic Fluid, Petroleum Base, for Preservation and Operation	X	X
MIL-L-6085	Lubricating Oil, Instrument, Aircraft, Low Volatility		X
MIL-C-6529	Corrosion Preventive, Aircraft Engine		X
MIL-L-7808	Lubricating Oil, Aircraft Turbine Engine, Synthetic Base, NATO Code Number O-148		X
MIL-L-7870	Lubricating Oil, General Purpose, Low Temperature	X	X
MIL-S-7886	Spark Plug, Shielded, Aircraft Reciprocating Engine, General Specification For		X
MIL-C-8188	Corrosion-Preventive Oil, Gas Turbine Engine, Aircraft, Synthetic Base		X
MIL-A-8421	Air Transportability Requirements, General Specification For	X	
MIL-I-8574	Inhibitors, Corrosion, Volatile, Utilization Of	X	X
MIL-L-8937	Lubricant, Solid Film, Heat Cured, Corrosion Inhibiting, NATO Code Number S-1738		X
MIL-C-9361	Container, Reusable. Shipping And Storage, Disassembled, Nested, External, Aircraft Fuel Tanks		X
MIL-Q-9858	Quality Program Requirements	X	
MIL-C-9897	Crate, Slotted Angle, Steel or Aluminum, for Lightweight Airframe Components and Bulky Items (For Maximum Load of 3000 Pounds)	X	X

Source: https://assist.dla.mil Downloaded: 2016-10-21T11:02Z
Check the source to verify that this is the current version before use.

APPENDIX A

SPECIFICATIONS MILITARY		MIL-STD-2073-1	-2
MIL-P-9902	Panel, Full Cleated, Partially Cleated and Uncleated; Plywood, Veneer Paper-Overlaid and Solid Fiberboard for Box, Modular Systems		X
MIL-M-9950	Missile Components, Liquid Oxygen, Liquid Nitrogen, Gaseous Oxygen, Gaseous Nitrogen, Instrument Air, Helium and Fuel Handling Systems, Cleaning and Packaging for Delivery.		X
MIL-C-9959	Container, Shipping and Storage (Flexible, Reusable, Watervaporproof)		X
MIL-E-10062	Engine, Preparation for Shipment and Storage Of		X
MIL-C-10382	Corrosion Preventive, Petrolatum, Spraying Application; for Food Handling Machinery and Equipment		X
MIL-W-10430	Welding Rods and Electrodes, Preparation for Delivery Of		X
MIL-C-10464	Cans, Hermetic Sealing, Metal, Light Gage, Tear-Strip Type		X
MIL-P-10603	Pumps and Pumping Units, Centrifugal, Power-Driven for Water; Packaging Of		X
MIL-G-10924	Grease, Automotive and Artillery		X
MIL-C-11133	Crate, Shipping, Wood, Open, Wirebound	X	X
MIL-C-11264	Container, Wood, Shipping, Vehicular Assemblies, Reusable For Tank Automotive Engine Transmission Differentials, Transfers, Final Drive, Driving Axle and Similar Assemblies	X	
MIL-C-11796	Corrosion Preventive Compound, Petrolatum, Hot Application		X
MIL-C-12000	Cable, Cord, and Wire, Electric; Packaging Of		X

Source: https://assist.dla.mil -- Downloaded: 2016-10-21T11:02Z
Check the source to verify that this is the current version before use.

APPENDIX A

SPECIFICATIONS MILITARY		MIL-STD-2073-1	-2
MIL-S-12134	Synchros, Resolvers, and Servo Motors, Packing Of		X
MIL-S-12651	Sprayer, Packing Of		X
MIL-B-12841	Basic Issue Items for Military Vehicles, Carriages and Equipment; Preparation for Shipment and Storage Of		X
MIL-C-16173	Corrosion Preventive Compound, Solvent Cutback, Cold Application		X
MIL-E-16298	Electric Machines Having Rotating Parts and Associated Repair Parts, Packaging Of		X
MIL-P-16789	Packaging, of Pumps, Including Prime Movers and Associated Repair Parts		X
MIL-O-16898	Optical Elements, Packaging Of		X
MIL-E-17555	Electronic and Electrical Equipment, Accessories, and Repair Parts, Packaging and Packing Of		X
MIL-P-17667	Paper, Wrapping, Chemically Neutral (Non-Corrosive)	X	X
MIL-M-18058	Machinery, Metal and Woodworking, Support Equipment and Associated Repair Parts, Preparation for Delivery Of		X
MIL-C-18487	Compound, Gun Slushing		X
MIL-S-19491	Semiconductor Device, Packaging Of		X
MIL-P-19644	Plastic Molding Material (Polystyrene Foam, Expanded Bead)		X
MIL-R-20092	Rubber Sheets and Molded Shapes, Cellular, Synthetic Open Cell (Foamed Latex)		X
MIL-P-20293	Paper, Kraft, Asphalt Impregnated		X

Source: https://assist.dla.mil -- Downloaded: 2016-10-21T11:02Z
Check the source to verify that this is the current version before use.

APPENDIX A

SPECIFICATIONS MILITARY		MIL-STD-2073-1	-2
MIL-L-21260	Lubricating Oil, Internal Combustion Engine, Preservative and Break-In		X
MIL-B-22019	Barrier Materials, Transparent, Flexible, Sealable, Volatile Corrosion Inhibitor Treated		X
MIL-B-22020	Bag, Transparent, Flexible, Sealable, Volatile Corrosion Inhibitor Treated		X
MIL-B-22191	Barrier Materials, Transparent, Flexible, Heat Sealable		X
MIL-C-22235	Corrosion Preventive Oil, Nonstaining		X
MIL-P-23199	Packaging and Packing Requirements for Special Purpose Components and Repair Parts		X
MIL-S-23665	Sonobuoy, Detection Devices, Preservation, Packaging and Packing Procedures for		X
MIL-L-23699	Lubricating Oil, Aircraft Turbine Engine, Synthetic Base		X
MIL-G-23827	Grease, Aircraft and Instrument, Gear and Actuator Screw		X
MIL-G-25537	Grease, Aircraft, Helicopter Osillating Bearing		X
MIL-P-25621	Preservation, Packaging and Packing of Rubber and Nylon Fuel, Oil and Water-Alcohol Cells		X
MIL-C-25731	Crates, Wood, for Domestic and Overseas Shipment of Airframe Components (2000-Pound Maximum Net Load)	X	X
MIL-C-26094	Can, Hermetic Sealing, Aluminum, Two-piece		X
MIL-B-26195	Box, Wood-Cleated, Skidded, Load-Bearing Base	X	X

Source: https://assist.dla.mil -- Downloaded: 2016-10-21T11:02Z
Check the source to verify that this is the current version before use.

APPENDIX A

SPECIFICATIONS MILITARY		MIL-STD-2073-1	-2
MIL-P-26342	Pallet Box, Fiberboard, Expendable, For Air Shipment	X	
MIL-P-26514	Polyurethane Foam, Rigid or Flexible, for Packaging	X	X
MIL-S-28786	Switches, Preparation for Delivery Of		X
MIL-C-38226	Container, Polyurethane, Rigid or Elastic, for Packaging Small Engines		X
MIL-B-38721	Box, Consolidation, Fiberboard		X
MIL-C-39028	Capacitor, Packing Of		X
MIL-R-39032	Resistor, Packaging of		X
MIL-D-40030	Drum, Plastic, Molded Polyethylene		X
MIL-C-40129	Cloth, Batiste, Cotton, Polishing	X	
MIL-B-43666	Box, Shipping Consolidation	X	X
MIL-I-45208	Inspection System Requirements	X	
MIL-T-45542	Tool Sets, Shop Sets and Kits (Hardware, Installation, Modification and Tool), Packaging Of		X
MIL-V-45554	Vulcanizing Equipment, Including Related Items, Tire and Tube, Rebuild and Repair, Preparation for Delivery Of		X
NIL-W-45562	Welding and Soldering Equipment, Supplies and Accessories, Packaging Of		X
MIL-L-46002	Lubricating Oil, Contact and Volatile Corrosion Inhibited		X
MIL-P-46093	Primer Coating, Synthetic (For Brake Drums)	X	X
MIL-H-46170	Hydraulic Fluid, Rust Inhibited, Fire Resistant, Synthetic Hydrocarbon Base		X

Source: https://assist.dla.mil -- Downloaded: 2016-10-21T11:02Z
Check the source to verify that this is the current version before use.

APPENDIX A

SPECIFICATIONS MILITARY		MIL-STD-2073-1	-2
MIL-B-46176	Brake Fluid, Silicone, Automotive All Weather, Operational and Preservative	X	X
MIL-B-46506	Box, Ammunition Packing, Wood, Wirebound	X	
MIL-C-52211	Components and Assemblies for Industrial Gas Production, Storage and Transport Equipment, Packaging Of		X
MIL-C-52950	Crate, Wood, Open and Covered	X	X
MIL-C-55330	Connector, Preparation for Delivery Of		X
MIL-C-55442	Cable Assemblies and Cord Assemblies, Packaging Of		X
MIL-B-55521	Battery, Dry, Packaging and Packing Of		X
MIL-M-55565	Microcircuits, Preparation for Delivery Of		X
MIL-V-62038	Vehicle, Wheeled, Preparation for Shipment and Storage Of		X
MIL-C-81309	Corrosion Preventive Compound, Water Displacing, Ultra Thin Film		X
MIL-G-81322	Grease, Aircraft, General Purpose, Wide Temperature Range, NATO Code Number G-395		X
MIL-G-81559	Gyroscope Assemblies, Attitude and Directional Reference Instruments for Aircraft, Preservation, Packaging of		X
MIL-B-81705	Barrier Materials, Flexible, Electrostatic-Free, Heat Sealable	X	X
MIL-P-81997	Pouches, Cushioned, Flexible, Electrostatic Free, Reclosable, Transparent	X	X

Source: https://assist.dla.mil -- Downloaded: 2016-10-21T11:02Z
Check the source to verify that this is the current version before use.

APPENDIX A

SPECIFICATIONS MILITARY		MIL-STD-2073-1	-2
MIL-F-87090	Foam, Combustion Retardant, For Cushioning Supply Items Aboard Navy Ships		X
STANDARDS FEDERAL			
FED-STD-101	Test Procedures for Packaging Materials	X	
MILITARY			
DOD-STD-100	Engineering Drawing Practices	X	
MIL-STD-105	Sampling Procedures and Tables for Inspection By Attributes	X	
MIL-STD-129	Marking for Shipment and Storage	X	X
MIL-STD-147	Palletized Unit Loads	X	
MIL-STD-163	Steel Mill Products, Preparation for Shipment and Storage		X
MIL-STD-281	Automobiles, Trucks, Truck-tractors and Trailer Dollies, Preservation and Packaging Of		X
MIL-STD-290	Packaging, of Petroleum and Related Products		X
MIL-STD-490	Specification Practices	X	
MIL-STD-648	Design Criteria for Specialized Shipping Containers	X	
MIL-STD-649	Aluminum and Magnesium Products, Preparation for Shipment and Storage		X
MIL-STD-767 (Classified)	Cleaning Requirements for Special Purpose Equipment, Including Piping Systems		X
MIL-STD-1186	Cushioning, Anchoring, Bracing, Blocking and Waterproofing, With Appropriate Test Methods		X

Source: https://assist.dla.mil -- Downloaded: 2016-10-21T11:02Z
Check the source to verify that this is the current version before use.

APPENDIX A

STANDARDS MILITARY		MIL-STD-2073-1	-2
MIL-STD-1187	Standard Size Unit, Intermediate and Exterior Containers for Modular Packaging and Unitization on the 40 Inch x 48 Inch Pallet	X	
MIL-STD-1367	Packaging, Handling, Storage and Transportability Program Requirements (for Systems and Equipments)	X	
MIL-STD-1510	Container Design Retrieval System, Procedures for Use Of	X	
MIL-STD-1660	Design Criteria For Ammunition Unit Loads	X	
MIL-STD-2073-1	Procedures for Development and Application of Packaging Requirements		X
MIL-STD-2073-2	Packaging Requirement Codes	X	
MS 18011	Container, Reusable, Aluminum, Hand Portable-Assembly for Shipping		X
MS 27219	Box, Self-Locking		X
MS 90363	Box, Fiberboard, With Cushioning, For Special, Minimum Cube Storage And Limited Reuse Applications	X	X
HANDBOOKS MILITARY			
MIL-HDBK-304	Package Cushioning Design	X	

Source: https://assist.dla.mil -- Downloaded: 2016-10-21T11:02Z
Check the source to verify that this is the current version before use.

APPENDIX A

(Copies of specifications and standards required by manufacturers in connection with specific acquisition functions should be obtained from the contracting activity or as directed by the contracting officer.)

30. Other Government documents, drawings, and publications. The following other Government documents, drawings, and publications form a part of this standard to the extent specified herein.

NATIONAL BUREAU OF STANDARDS

H4-1 Federal Supply Code for Manufacturers

CODE OF FEDERAL REGULATIONS

49 CFR Transportation-Hazardous Materials

(Application for copies should be addressed to the Superintendent of Documents, Government Printing Office, Washington, DC 20402.)

40. Other publications. The following documents form a part of this standard to the extent specified herein. The issues of the documents which are indicated as DoD adopted shall be the issue listed in the current DoDISS and the supplement thereto, if applicable.

AMERICAN NATIONAL STANDARDS INSTITUTE (ANSI)

ANSI X3.11 Specification for General Purpose Cards for Information Processing

(Application for copies should be addressed to the American National Standards Institute, 1430 Broadway, New York, NY 10018.)

AMERICAN SOCIETY FOR TESTING AND MATERIALS (ASTM)

ASTM D 3951 Commercial Packaging

(Application for copies should be addressed to the American Society for Testing and Materials, 1916 Race Street, Philadelphia, PA 19103.)

(Industry association specifications and standards are generally available for reference from libraries. They are also distributed among technical groups and using Federal agencies.)

Source: https://assist.dla.mil -- Downloaded: 2016-10-21T11:02Z
Check the source to verify that this is the current version before use.

APPENDIX B

PACKAGING DESIGN VALIDATION PROVISIONS

10. Scope.

10.1 Responsibility for testing. Unless otherwise specified in the contract, the contractor is responsible for the performance of all testing requirements as specified herein. Except as otherwise specified in the contract, the contractor shall use his own or any other facilities suitable for the performance of the inspection requirements specified herein, unless disapproved by the Government. Packaging design validation provisions shall be in accordance with the test requirements of MIL-P 116 and as specified herein. Unless otherwise specified, testing shall be witnessed by a Government representative designated by the contracting officer. The Government reserves the right to perform any of the testing set forth herein where such inspection is deemed necessary to assure supplies and services conform to prescribed requirements.

10.1.1 Alternate test procedure approval. In instances wherein a test may necessitate an impossible or impractical manipulation of a mounted, preserved item or where the overall size or weight of the item or test equipment obviates compliance with a specific test requirement of this standard, the contractor may propose an alternate test procedure for approval.

20. Packaging design validation tests. Packaging design validation tests shall consist of all the examinations and tests specified in this appendix and shall be conducted in accordance with the requirements of 5.5. Packaging design validation tests are intended to prove the adequacy of the preservation, blocking, bracing, cushioning and container for protecting the item. Rough handling tests of 40.1 shall be followed by the applicable preservation (unit pack) tests of MIL-P-116 before the final design is approved. Unless otherwise specified, one prototype pack will suffice if it succeeds in passing the tests. To pass the packaging design validation, the contained item(s), after testing, shall evidence no damage to its structural integrity, shall remain within all dimensional tolerances, and shall be serviceable. The container shall remain structurally sound. Waterproof papers, moisture-vaporproof barriers, wrappings, interior containers, bracing, blocking, bolting, and cushioning shall be intact and capable of providing the intended protection. Hazardous material package testing shall conform to the requirements of Title 49 CFR, MIL-STD-648, and to service-peculiar test requirements for ammunition packs.

30. Dummy load. When performing the packaging design validations tests and a dummy load is substituted in the rough handling tests of Table I, the details of instrumentation, e.g. location of accelerometers, shall be approved by the packaging organization of the DoD contracting activity. When the equipment to be simulated includes integral internal shock/vibration isolation mounts, these mounts shall be included in the dummy load. A load shall be suspended on these mounts equivalent in weight and center of gravity to that suspended on the mounts in the equipment, and they shall be spaced and located as in the

Source: https://assist.dla.mil -- Downloaded: 2016-10-21T11:02Z
Check the source to verify that this is the current version before use.

equipment. In this case the accelerometers shall be located as close as practicable to the cg of the suspended weight. After instrumentation, the pack shall be tested in accordance with Table I, and the resultant acceleration shall be less than the fragility rating of the item. The method of instrumentation and test results shall be available for review by the acquiring activity.

40. Test methods.

40.1 Rough handling tests. The rough handling test procedures shall be in accordance with FED-STD-101. Test methods to be used are specified in Table I.

50. Applicability of tests.

50.1 Small containers. Only free-fall drop tests and vibration tests shall apply to small containers. Either vibration test shall be conducted at the option of the contractor. Small containers are those having no one edge or diameter over 60 inches and a gross weight of 150 pounds or less.

50.2 Large containers. All rough handling tests, except for free-fall tests, shall apply to large containers. Either vibration test shall be conducted at the option of the contractor. However, tipover tests will apply only when additionally specified. Either impact test shall be conducted at the option of the contractor. Large shipping containers are those measuring more than 60 inches on any one edge or diameter, or those which, when loaded, have gross weights in excess of 150 pounds.

50.3 Ammunition unit loads. Ammunition unit load test requirements are stated in MIL-STD-1660.

60. Disposition of samples after test. All samples used shall be re-processed as necessary. When the packaged item may have been damaged as a result of testing, the item shall be inspected as necessary to determine its acceptability.

70. Marking of containers for free-fall drop tests. Marking of the specimen containers prior to test shall be as follows and as indicated in Figure 1.

70.1 Bags and cylindrical containers. Bags and cylindrical containers shall be marked as outlined in the applicable test method.

70.2 Square containers. Square containers shall be marked as follows:

a. Place the container with lid or opening surface uppermost. This surface shall be marked "Top." The opposite surface shall be marked "Bottom." Select one of the remaining surfaces and mark as Side A. The opposite surface shall be marked Side B. The surface which is counterclockwise from Side A shall be marked Side D. The remaining surface shall be marked Side C.

Source: https://assist.dla.mil -- Downloaded: 2016-10-21T11:02Z
Check the source to verify that this is the current version before use.

b. The corners shall be marked with even-numbered corners on top and odd-numbered corners on bottom. The corner at the junction of Side A and Side D shall be marked Number 6. The diagonally opposite corner shall be marked Number 8. The corner at the junction of Side B and Side D shall be marked Number 2. The diagonally opposite corner shall be marked Number 4. Corner Number 1 shall be under corner Number 4, 3 under 2, 5 under 8 and 7 under 6.

70.3 Rectangular containers. Rectangular containers shall be marked as follows:

a. Place the container with the lid or opening surface uppermost. This surface shall be marked "Top." The opposite surface shall be marked "Bottom." One of the longest remaining surfaces shall be marked Side A. The opposite surface shall be marked Side B. The surface which is counter-clockwise from Side A shall be marked Side D. The remaining surface shall be marked Side C.

b. The corners shall be marked as prescribed in 70.2.b.

80. Sequence of free-fall drop tests for procedures B and E in Table I. The sequence of drops shall be bottom, top, A, B, C, and D for Procedure B and corners 1 through 8, in sequence for Procedure E.

Source: https://assist.dla.mil -- Downloaded: 2016-10-21T11:02Z
Check the source to verify that this is the current version before use.

APPENDIX B

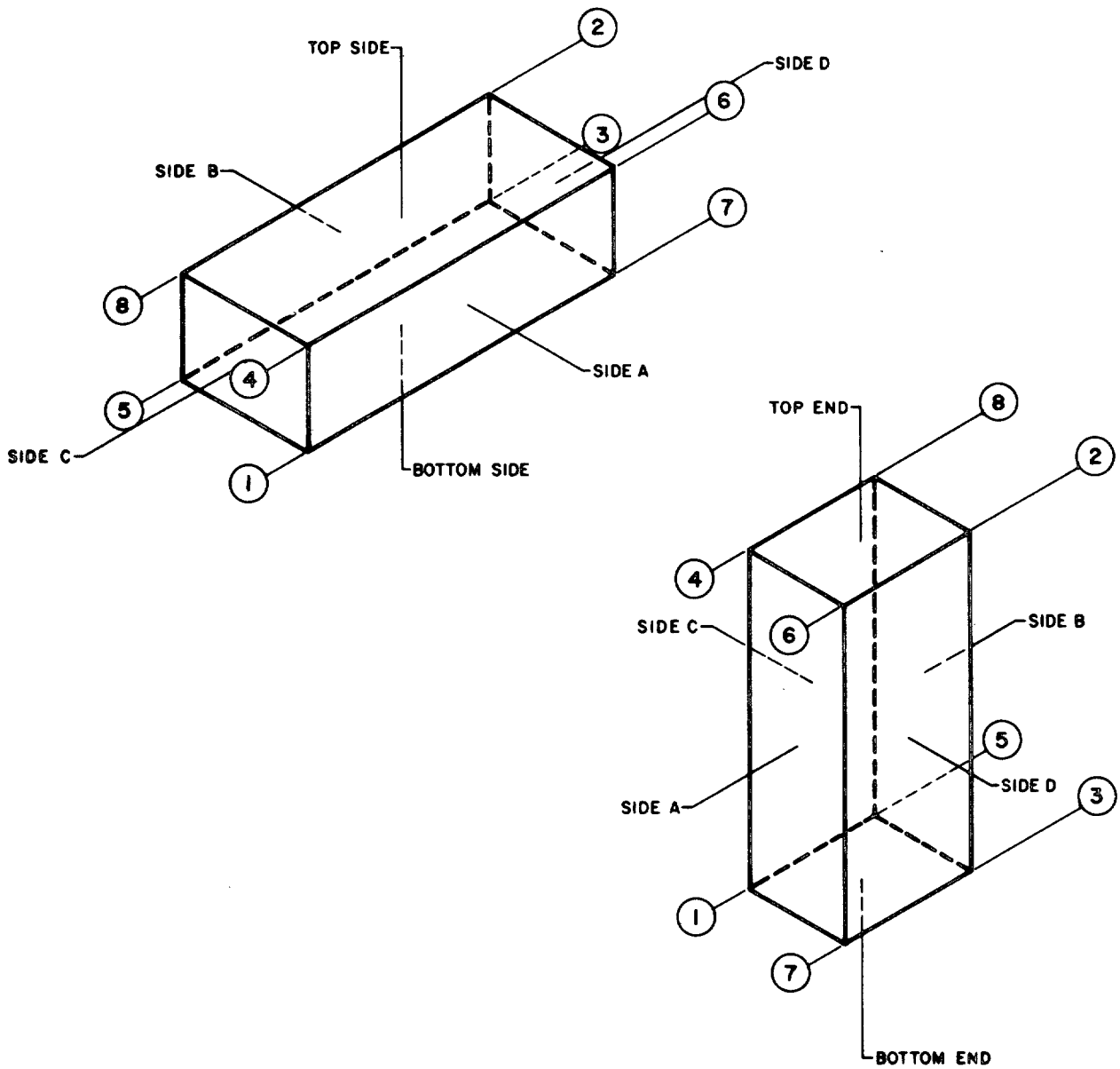

Figure 1. Marking the specimen containers prior to test.

Source: https://assist.dla.mil -- Downloaded: 2016-10-21T11:02Z
Check the source to verify that this is the current version before use.

APPENDIX B

TABLE I. Rough handling tests

Test	Method of FED-STD-101 Cylindrical Containers	Rectangular Containers	Special requirements or exceptions
Free-fall drop tests:			See notes 1, 2, and 3
Corner drop	N/A	5007 Procedure E	
Flat drop	N/A	5007 Procedure B	
Cylindrical Container Drop	5007 Procedure D	N/A	
Rotational drop tests:			See note 1
Edgewise	N/A	5008	
Cornerwise	N/A	5005	
Tipover	N/A	5018	
Impact tests:			See notes 1 and 4
Pendulum	N/A	5012	
Incline	N/A	5023	
Superimposed load:			See note 5
(stackability with dunnage)	5016	5016	
(uniformly distributed without dunnage)	5017	5017	
Vibration:			See note 1
Sinusoidal motion	5020	5020	
Repetitive shock	5019	5019	

NOTES:

1. Except as stipulated in Note 2 below, the contractor shall have the option as to what method is to be applied in accomplishing the free-fall, rotational, impact and vibration tests.

2. Rectangular containers employing installed cushion pads, bracing or other shock mitigating/isolating systems shall be subjected to corner and flat drops or to edgewise and cornerwise rotational drops, as applicable. The drop test sequence for the free fall drops of Procedures B and E in Test Method 5007 of FED-STD-101 shall be:

DROP NO.	CORNER DROPS	FLAT DROPS
1	Corner 1	
2	Corner 2	
3		Bottom
4		Top
5	Corner 3	
6	Corner 4	
7		Side A
8		Side B
9	Corner 5	

Source: https://assist.dla.mil -- Downloaded: 2016-10-21T11:02Z
Check the source to verify that this is the current version before use.

APPENDIX B

DROP NO.	CORNER DROPS	FLAT DROPS
10	Corner 6	
11		Side C
12		Side D
13	Corner 7	
14	Corner 8	

3. Items having a net weight exceeding 100 pounds (see 50.1) and which are secured to a base within, or to the base of, a container shall be tested as indicated for large containers (see 50.2).

4. For container or container unit loads which are likely to be individually loaded aboard ship by conventional methods, transferred at sea, issued to ground troops, or otherwise identified by the design activity, the impact tests in the longitudinal direction shall be conducted at 10 ft/sec.

5. Unless otherwise specified, both tests shall be conducted.

Source: https://assist.dla.mil -- Downloaded: 2016-10-21T11:02Z
Check the source to verify that this is the current version before use.

APPENDIX C

SELECTION OF PACKAGING REQUIREMENTS

10. Scope.

10.1 General. This appendix presents guidance in:

a. categorization (see 20) (see Tables I, II, and III)

b. selecting preservation methods (see Table I)

c. development of predetermined packaging codes (see Table IV)

d. formatting coded data (see Table IV and Figure 1)

e. computation of weight and cube data (see Table V)

f. computation of the bill of materials (see Table V)

g. use of container selection table (see Table VII)

h. use of chart of most frequently used cushioning (see Table VI)

10.2 Detailed. All materiel to be packaged can be classified into three types of items; namely, common, selective, and special.

a. Common items can be categorized by chemical, physical, and other characteristics and are items for which complete packaging details can be specified by predetermined MIL-STD-2073-2 coding or in the clear data.

b. Selective items cannot appropriately use predetermined packaging data and yet do not require a drawing, sketch, illustration, or narrative type instruction to specify packaging details. These packaging details are specified by MIL-STD-2073-2 codes or in the clear data.

c. Special items have peculiar characteristics such as weight, configuration, complexity, fragility, or other considerations that preclude their being grouped as common or selective. An item is considered special if drawings, sketches, illustrations, or narrative type instructions are required to specify packaging details.

10.2.1 Characteristics. Knowledge of the physical and chemical characteristics and significant features of the item are required to classify a given item as to type. These characteristics and features are item composition, item surface chemistry, criticality of the surface, item compatibility with preservatives and such physical factors as size, weight, and fragility. Knowledge of these characteristics leads to the development of a category code for an item.

Source: https://assist.dla.mil -- Downloaded: 2016-10-21T11:02Z
Check the source to verify that this is the current version before use.

10.2.2 Code selection. Tables I, II and III provide the information for the selection of the category code. The category code for common items leads to the predetermined packaging codes in Table IV. The category code for selective items indicates that a non-predetermined packaging code must be established. The category code for special group items indicates that a packaging code cannot be established and that a Special Packaging Instruction (SPI) is required.

10.2.3 Decision Guidance. The decision chart guide in 1.2 may be referred to for use in developing packaging requirements.

10.3 Category code. The category code is a four digit code derived from Tables I, II and III. This code provides a means to concisely define the characteristics of the item being packaged with respect to the following attributes:

a. First category. The chemical and physical characteristics (Table I) of the item to be considered in the selection of a MIL-P-116 method of preservation (two digits).

b. Second category. The weight and fragility characteristics (Table II) of the item to be considered in the selection of a MIL-P-116 submethod of preservation (one digit).

c. Third category. Preservative requirements (Table III) for the item (one digit).

20. Categorization.

20.1 Method. Items shall be categorized in the order indicated in 10.3. To develop the four digit category code, extract the category code from Tables I, II, and III.

20.1.1 Item characteristics. Categories represent the summation of pertinent chemical, physical and other characteristics that significantly influence the packaging required for adequate protection of items. The designation of the appropriate characteristics of each category, in the sequence as listed, provides four-digit identification that permits the grouping of items. These items, which may be dissimilar in their function, have the same characteristics and therefore require the same method of preservation.

20.1.2 First category - chemical and physical. The first category encompasses the determination of those characteristics that directly influence the method of preservation needed to afford the required protection. These are:

a. Composition - condition
b. Critical - non-critical
c. Preservative applicability.

Source: https://assist.dla.mil -- Downloaded: 2016-10-21T11:02Z
Check the source to verify that this is the current version before use.

APPENDIX C

20.1.2.1 Item characteristics and symbols. To provide a uniform method of placing items into an identifiable group, the divisions of each category have been provided with identifying symbols. The symbols have been designated numerically. They are the first two symbols in a four-digit category code. The approved divisions for each category are shown in Table I. A code ZZ will indicate the item is selective or special.

20.1.2.2 Characteristic consideration. Before packaging requirements can be determined, the characteristics of the item must be examined and recorded. Tangible considerations include:

a. Surface chemistry
b. Surface mechanical (finish)

20.1.2.3 Examination and research. These determinations are made by physical examination of the item and, if necessary, research of the background data. Other considerations are thorough knowledge of the item that includes physical composition, structure, operational application, and function. With this knowledge, the determinations of preservative compatibility, sensitivity to shock, vibration or distortion and reliability can be established. All characteristics of the item shall be considered in determining the appropriate category code for the item.

20.1.2.4 Critical, noncritical, and preservative applicability. The determination of the appropriate classification (noncritical or critical) and preservative applicability is dependent upon the following considerations:

a. Degree of machining performed on item surface or surfaces

b. Item function and relative importance in the operation of the item

c. Requirement for high reliability where failure of the item could result in total loss of equipment and operating personnel

d. Receptivity of the item to preservative application without damaging the item or causing potential malfunction during operation.

20.1.2.5 Critical group items. Items shall generally be classified critical if their characteristics are determined to meet one or more of the following conditions:

a. The metallic surface(s) of the item is machined to close tolerances or high finish. The surface is prepared for close fit and intimate contact, when assembled with the surface(s) of a mating part. Operationally, these surfaces:

1. Are mating parts of driving gears, bushings, shafts, bearings, etc.

2. Are secured to surface of a mating part to obtain a seal (metal to metal).

Source: https://assist.dla.mil -- Downloaded: 2016-10-21T11:02Z
Check the source to verify that this is the current version before use.

3. Are threaded with closely controlled dimensions and geometry and are utilized in the controlled varied movement of components or assemblies for adjustment, calibration, etc.

b. Metallic or nonmetallic compositions are worked by grinding or polishing to attain highly polished surfaces as in optical and reflective devices.

c. Application of preservative to the item is prohibited for one of the following reasons:

1. Preservative application would damage the item

2. Preservative would be excessively difficult to remove

3. Presence of any residual preservative would be incompatible with operational fluids, oils or greases and would potentially cause malfunction during operation.

d. Items whose functions in assembly and during operations are considered relatively more significant than brackets, hardware, castings, wiring, etc.

20.1.2.6 Noncritical group items. Noncritical items are those that do not meet the criteria established for critical group items in 20.1.2.5.

20.1.2.7 Preservative application: permitted (blank), or prohibited (X). The determination of whether or not a preservative shall be applied is guided by:

a. Criteria established in 20.1.2.5c

b. Items with chemical compositions that are resistant to deterioration do not require a preservative to assure appropriate protection, whereas items susceptible to deterioration do require a preservative, such as iron and steel unless prohibited by other factors.

20.1.3 Second category - weight/fragility. This category is devised to establish definitive controls for weight/fragility grouping of items. These divisions determine the preservation submethod and cushioning for the item and, therefore, have direct influence on the container that will be utilized. It provides a means of separating those items which will permit the use of a bag-type container from those requiring containers of greater strength or other desired qualities. The weight/fragility limitations and symbols for the divisions are found in Table II. A Code Z will indicate that the item is selective or special.

20.1.4. Third category - preservatives. This category is devised to establish preservative application code. Preservative will be determined in accordance with MIL-P-116 and Appendix F. The appropriate code of Table III

Source: https://assist.dla.mil -- Downloaded: 2016-10-21T11:02Z
Check the source to verify that this is the current version before use.

will be shown as the third category. If the required preservative is not listed in the table, assign a "Z" code. A code Z will indicate that the item is either selective or special.

20.1.5 Packaging by use of predetermined data. If categorization of an item can be accomplished by a four digit code without resorting to a special or "Z" code, the item is a "common" item. The correct packaging for common items has been developed and can be defined by predetermined data. This predetermined data is listed in Table IV of this appendix and must be used for the appropriate four digit categorization for all common items.

20.1.6 Validation of package design for common group items. Packaging data prepared for items in the common group shall be developed without conducting individual packaging design validation tests.

20.1.7 Packaging design validation and testing of selective and special group items. See 5.5 for requirements.

30. Detailed requirements.

30.1 Method of recording requirements. Developed packaging data shall be recorded in accordance with the requirements contained in Appendix K.

30.2 Code sequence for common items. Sequencing format for predetermined data for common items is defined in Figure 1.

40. Formulas. Table V of this appendix contains the formulas for calculating the weight and sizes of barrier materials, containers, wraps and cushioning. The data contained in MIL-STD-2073-2 can be used in conjunction with the formulas in order to arrive at the weight and dimensions of the package.

50. Cushioning correlation. Table VI of this appendix contains cushioning material correlation data that can be used in the selection of cushion material. However, MIL-HDBK-304 should be used as a guide in designing cushioning systems.

60. Container selection. For reference purposes, Table VII of this appendix lists various containers with their weight limitations and the levels of protection for which they should be used. This data can be used in the selection of the most economical container for the required packaging performance.

Source: https://assist.dla.mil -- Downloaded: 2016-10-21T11:02Z
Check the source to verify that this is the current version before use.

APPENDIX C

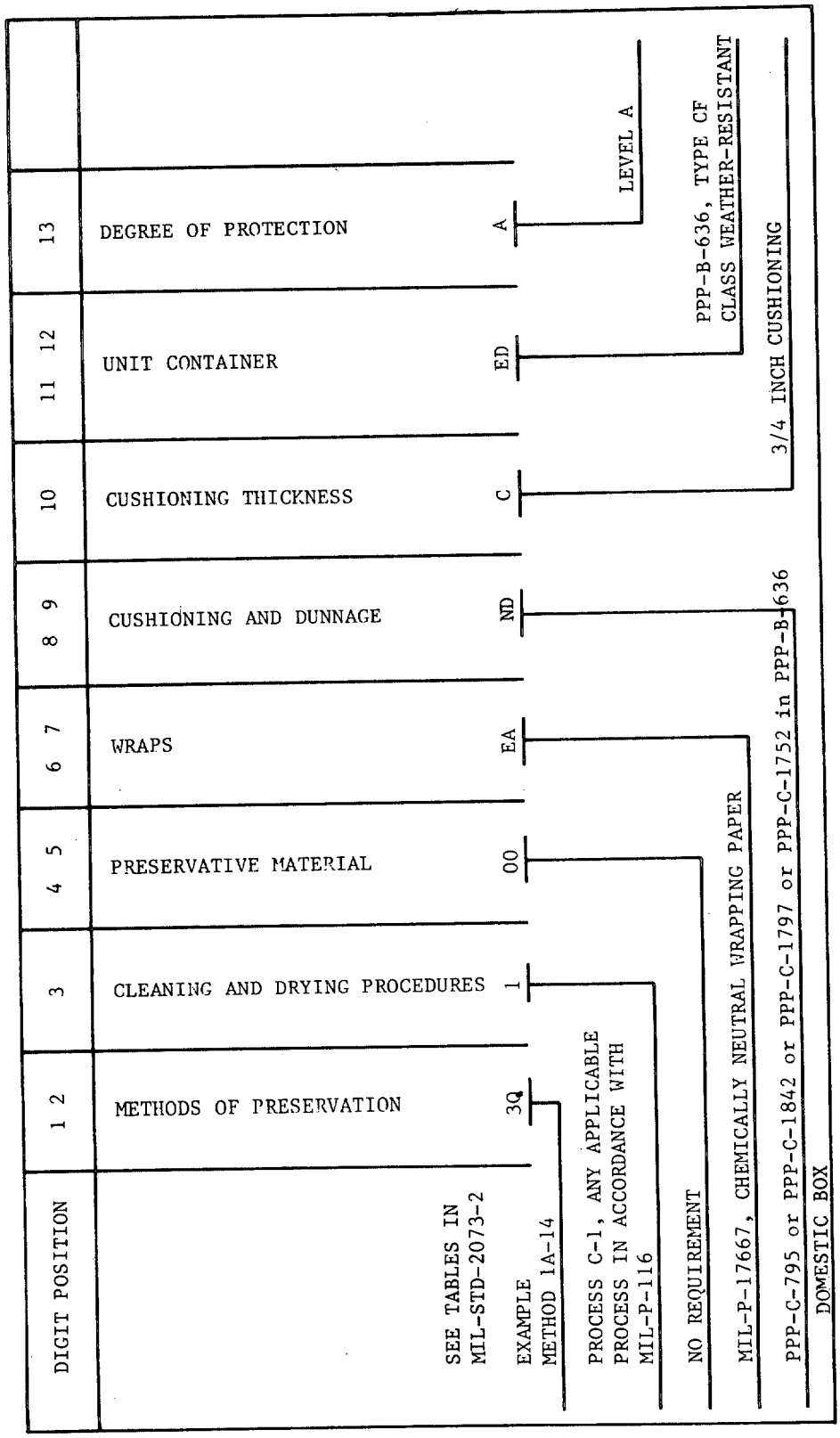

Figure 1. Format for interpretation of packaging code sequence for common group items. (See Table IV.)

Source: https://assist.dla.mil -- Downloaded: 2016-10-21T11:02Z
Check the source to verify that this is the current version before use.

APPENDIX C

TABLE I. Chemical and physical characteristics
(Bare metal items)

Composition or Condition		Contact Preservative Prohibited	Has Critical Surfaces or Application	Has Non-Critical Surfaces	Combined with a Non-metallic Material	1st & 2nd Digit Category Code	Method of MIL-P-116
Iron				X		Ø1	I
Steel(Bare or Black				X	X	Ø2	I
Oxide Coated)			X			Ø3	IA
Includes all stain-			X		X	Ø4	IA
less varieties ex-		X		X		Ø5	IC
cept those having		X		X	X	Ø6	IC
minimum compositions		X	X			Ø7	II
of 17Cr-7Ni		X	X		X	Ø8	II
Magnesium (Bare or Chromated)				X		Ø9	IC
				X	X	1Ø	IC
		X	X			11	II
		X	X		X	12	II
		X		X		13	IA
		X		X	X	14	IA
Beryllium	Nickel			X		15	IC
Brass	Cobalt			X	X		Note 1
Bronze	Silver	X	X			16	IC
Cadmium	Stainless	X	X		X	17	IC
Copper	Steel		X			18	I
Lead	Titanium		X		X	19	I
Monel	Tin						
Rough Castings							
Sintered Alloy							
Copper Alloys							
Zinc							
Aluminum							
Babbitt							
Ferrous and		X	X			2Ø	II
Non-ferrous combined				X		21	IC
None of above						ZZ	

Source: https://assist.dla.mil -- Downloaded: 2016-10-21T11:02Z
Check the source to verify that this is the current version before use.

APPENDIX C

TABLE I. Chemical and physical characteristics (Plated-coated items) (continued)

Composition or Condition	Contact Preservative Prohibited	Has Critical Surfaces or Application	Has Non-Critical Surfaces	Combined with a Non-metallic Material	1st & 2nd Digit Category Code	Method of MIL-P-116
Ferrous metals fully plated with chromium, copper, nickel, silver, tin, gold, iridium, osmium, palladium, rhodium, ruthenium, zinc, cadmium or terne	X	X			22	IC
	X	X		X	23	IC
	X		X		24	IC
	X		X	X		Note 1
		X			25	I
		X		X	26	I
Non-Ferrous metals that have been plated			X		27	III
			X	X		Note I
	X	X			28	IC
	X	X		X	29	IC
		X			3Ø	I
		X		X	31	I
Iron or steel which has a phosphate coating, copper or brass which have chromate or black oxide finish over entire surface	X		X		32	IC
			X	X		Note 1
	X	X			33	IC
	X	X		X	34	IC
		X			35	I
		X		X	36	I
Anodized aluminum or magnesium; zinc or zinc-plated iron or steel; zinc alloy castings or magnesium to which chromate coatings have been applied; alclad aluminum	X		X		37	III
	X		X	X		Note 1
	X	X			38	IC
	X	X		X	39	IC
Anodized aluminum combined with passivated CRES.	X				4Ø	III

Source: https://assistdoa.mil -- Downloaded: 2016-10-21T11:02Z
Check the source to verify that this is the current version before use.

APPENDIX C

TABLE I. Chemical and physical characteristics (Plated-coated items) (continued)

Composition or Condition	Contact Preservative Prohibited	Has Critical Surfaces or Application	Has Non-Critical Surfaces	Combined with a Non-metallic Material	1st & 2nd Digit Category Code	Method of MIL-P-116
Metals that are painted, varnished, lacquered or enameled	X		X		41	III
			X	X		Note 1
Porous metal, oil impregnated					42	IC
None of above					ZZ	

TABLE I - Chemical and physical characteristics (nonmetals) (continued)

Plastics or fiber	X		X		43	IC
	X	X			44	IC
Natural or synthetic rubber	X	X			45	IC
	X		X		46	IC
Leather	X		X		47	IC
	X	X			48	IC
Optical glass, quartz, mica and assemblies using these as component parts	X	X			49	IA
Carbon, graphite, asbestos, ceramics and glass (other than optical)	X		X		50	III
	X	X			51	IC
Paper	X		X		52	IC
	X	X			53	IC
Wood or Cork	X		X		54	III
	X				55	IC
Cordage and items made of cloth	X		X		56	III
	X	X			57	IC
Textiles	X	X			58	IC
None of above					ZZ	

Source: https://assist.dla.mil -- Downloaded: 2016-10-21T11:02Z
Check the source to verify that this is the current version before use.

APPENDIX C

TABLE I. Chemical and physical characteristics (complete electrical instruments, radio and radar sets, other communications equipment) (continued)

Composition or Condition	Contact Preservative Prohibited	Has Critical Surfaces or Application	Has Non-Critical Surfaces	Combined with a Non-metallic Material	1st & 2nd Digit Category Code	Method of MIL-P-116
Assembly may contain any material and is sealed, external surfaces need no further protection against corrosion	X				6Ø	III
Assembly may contain any material and is sealed, external surfaces need protection against corrosion					61	IA
Assembly may contain any material and is not sealed					62	II
None of above					ZZ	

TABLE I. Chemical and physical characteristics (Radio and radar, other communications equipment, subassemblies and component parts) (not sealed) (continued)

Steel, iron and magnesium	X		X		64	IA
	X	X			65	II
		X		X	66	II
Electrical non-metallic combination with gold plating					67	IC
Optical glass, quartz and mica (includes plug type electronic connectors, resistors, capacitors, etc.)	X		X		68	1C
	X	X			69	IA
Electrostatic, electromagnetic, magnetic or radioactivity sensitive devices or parts	X				ZZ	IA Note 2

Source: https://assist.dla.mil -- Downloaded: 2016-10-21T11:02Z
Check the source to verify that this is the current version before use.

APPENDIX C

TABLE I. Chemical and physical characteristics (Radio and radar, other communications equipment, subassemblies and component parts) (not sealed) (continued)

Composition or Condition	Contact Preservative Prohibited	Has Critical Surfaces or Application	Has Non-Critical Surfaces	Combined with a Non-Metallic Material	1st & 2nd Digit Category Code	Method of MIL P-116
Static sensitive component parts	X				ZZ	IC Note 3
Copper, bronze, brass, beryllium	X	X			72	IA
Gold, silver, platinum and iridium and other precious metals	X				73	IA
Parts move on bearings (any material)	X	X		X	74	II
None of above					ZZ	

TABLE I. Chemical and physical characteristics (Electrical-Mechanical assemblies) (continued)

Parts electrically balanced or calibrated — Bare steel, iron or magnesium	X				77	II
Other	X			X	78	IA
End Product may contain any material (not sealed)	X		X		8Ø	IA
		X			81	IA
		X		X	82	II Note 4
	X	X			83	II
End Product may contain any material (sealed)		X			84	IC
	X		X		85	III
None of the above apply					ZZ	

Source: https://assist.dla.mil -- Downloaded: 2016-10-21T11:02Z
Check the source to verify that this is the current version before use.

APPENDIX C

TABLE I. Chemical and physical characteristics (continued)

Note 1	Package to requirement of non-metal present and indicate non-metal group in category code.
Note 2	Package to protect item against emf and esd damage (not a common item)
Note 3	Package to protect item against esd damage (not a common item)
Note 4	Any functional lubricant not requiring removal may be applied to the unsealed equipment

Source: https://assist.dla.mil -- Downloaded: 2016-10-21T11:02Z
Check the source to verify that this is the current version before use.

APPENDIX C

TABLE II. Table for selecting weight and fragility category (Category for combinations of weights of item and fragility requirements).

Item weight (pounds) and dimensions	Degree of fragility	Category Code
2 lbs. or less one dimension 2 inches or less, other dimensions less than 24 inches (see note 1)	Above 110 G's	A
2 lbs. or less all dimensions over 2 inches but less than 24 inches (see note 2)	Above 110 G's	B
Over 2 lbs. to 5.0 lbs. all dimensions less than 24 inches	Above 110 G's	C
Over 5.0 lbs. to 7.5 lbs all dimensions less than 24 inches.	Above 110 G's	D
Over 7.5 lbs. to 10.0 lbs. all dimensions less than 24 inches	Above 110 G's	E
0.25 lbs. or less one dimension 2 inches or less other dimensions less than 24 inches	85 to 110 G's	F
Over 0.25 lbs. to 2.0 lbs. One dimensions 2 inches or less other dimensions less than 24 inches	85 to 110 G's	G
2 lbs. or less all dimensions over 2 inches but less than 24 inches	85 to 110 G's	H
Over 2 lbs to 5.0 lbs. all dimensions less than 24 inches	85 to 110 G's	J
Over 5 lbs. to 7.5 lbs all dimensions less than 24 inches	85 to 110 G's	K
Over 7.5 lbs. to 10 lbs. all dimensions less than 24 inches	85 to 110 G's	L
Over 10 pounds regardless of dimension	Any degree of fragility	Z
Any weight and one dimension exceeding 24 inches	Any degree of fragility	Z
Any weight any dimension	Less than 85 G's	Z

Note 1 Items which have irregularities or protrusions which require cushioning to protect the package shall be coded F or G.

Note 2 Items which have irregularities or protrusions which require cushioning to protect the package shall be coded H.

Source: https://assist.dla.mil -- Downloaded: 2016-10-21T11:02Z
Check the source to verify that this is the current version before use.

APPENDIX C

Table III. Table for selecting preservative category

(Select the preservative in accordance with MIL-P-116)

Applicable Preservative Material Used	Category Code	Corresponding MIL-STD-2073-2 Code
No requirement	Ø	ØØ
P-1	A	Ø1
P-2	B	Ø2
P-6	C	Ø6
P-9	D	Ø9
P-10	E	1Ø
P-11	F	11
P-14	G	14
P-15	H	15
P-17	I	17
P-18	J	18
P-19	K	19
MIL-H-6083 Hydraulic Preservative	L	62
MIL-L-7870 Lubricating Oil, Gen Purpose, Low Temp.	M	5Ø
Special requirement or not listed above	Z	ZZ

Source: https://assist.dla.mil -- Downloaded: 2016-10-21T11:02Z
Check the source to verify that this is the current version before use.

TABLE IV. Corresponding coded packaging data for common group items

MIL-P-116 Method of preservation and group number from Table I	Category Codes: Table II weight/ fragility	Category Codes: Table III Preservative selection	MIL-STD-2073-2 codes: Level A requirements	MIL-STD-2073-2 codes: Level B requirements	MIL-STD-2073-2 codes: Level C requirements
Method IC (without preservative) Group No.	A	Ø	2D1ØØØØØØØØXXA	2D1ØØØØØØØXXB	1Ø1ØØYYØØØYYC
Ø5 43	B	Ø	2M1ØØØØØØØXXA	2D1ØØØØØØØD3B	1Ø1ØØYYYYXYYC
Ø6 44	C	Ø	2M1ØØØØNUAXXA	2D1ØØØØNAAD3B	1Ø1ØØYYYYXYYC
16 45	D	Ø	2M1ØØØØNDBXXA	2D1ØØØØNABECB	1Ø1ØØYYYYXYYC
17 46	E	Ø	2M1ØØØØNDCXXA	2D1ØØØØNACECB	1Ø1ØØYYYYXYYC
22 47	F	Ø	2D1ØØØØNAAXXA	2D1ØØØØNAAXXB	1Ø1ØØYYYYXYYC
23 48	G	Ø	2D1ØØØØNABXXA	2D1ØØØØNABXXB	1Ø1ØØYYYYXYYC
24 51	H	Ø	2M1ØØØØNUBXXA	2D1ØØØØNABD3B	1Ø1ØØYYYYXYYC
28 52	J	Ø	2M1ØØØØNUCXXA	2D1ØØØØNACD3B	1Ø1ØØYYYYXYYC
29 53	K	Ø	2M1ØØØØNDDXXA	2D1ØØØØNADECB	1Ø1ØØYYYYXYYC
32 55	L	Ø	2M1ØØØØNDFXXA	2D1ØØØØNAFECB	1Ø1ØØYYYYXYYC
33 57					
34 58					
38 68					
39					
Method IC (with preservative) Group No.	A	**See Table III for further information (other than Ø)	2E1**GFØØØXXA	2E1**GFØØØXXB	111YYYYØØØYYC
	B		2M1**GFØØØXXA	2E1**GFØØØD3B	111YYYYYYXYYC
	C		2M1**GFNUAXXA	2E1**GFNAAD3B	111YYYYYYXYYC
	D		2M1**GFNDBXXA	2E1**GFNABECB	111YYYYYYXYYC
Ø9	E		2M1**GFNDCXXA	2E1**GFNACECB	111YYYYYYXYYC
1Ø	F		2E1**GFNAAXXA	2E1**GFNAAXXB	111YYYYYYXYYC
15	G		2E1**GFNABXXA	2E1**GFNABXXB	111YYYYYYXYYC
21	H		2M1**GFNUBXXA	2E1**GFNABD3B	111YYYYYYXYYC
42	J		2M1**GFNUCXXA	2E1**GFNACD3B	111YYYYYYXYYC
67	K		2M1**GFNDDXXA	2E1**GFNADECB	111YYYYYYXYYC
84	L		2M1**GFNDFXXA	2E1**GFNAFECB	111YYYYYYXYYC

Source: https://assist.dla.mil -- Downloaded: 2016-10-21T11:02Z
Check the source to verify that this is the current version before use.

TABLE IV. Corresponding coded packaging data for common group items (continued)

MIL-P-116 Method of preservation and group number from Table I	Category Codes: Table II weight/ fragility	Category Codes: Table III Preservative selection	MIL-STD-2073-2 codes: Level A requirements	MIL-STD-2073-2 codes: Level B requirements	MIL-STD-2073-2 codes: Level C requirements
Method IA (without preservative) Group No. 13 72 14 73 49 78 64 8Ø 69	A	Ø	3G1ØØØØØØØXXA	3G1ØØØØØØØXXB	1Ø1ØØØØØØØYYC
	B	Ø	3P1ØØØØØØØXXA	3G1ØØØØØØØD3B	1Ø1ØØØØØØØYYC
	C	Ø	3P1ØØØØNUAXXA	3G1ØØØØNAAD3B	1Ø1ØØØØYYXYYC
	D	Ø	3P1ØØØØNDBXXA	3G1ØØØØNABECB	1Ø1ØØØØYYXYYC
	E	Ø	3P1ØØØØNDCXXA	3G1ØØØØNACECB	1Ø1ØØØØYYXYYC
	F	Ø	3G1ØØØØNAAXXA	3G1ØØØØNAAXXB	1Ø1ØØØØYYXYYC
	G	Ø	3G1ØØØØNABXXA	3G1ØØØØNABXXB	1Ø1ØØØØYYXYYC
	H	Ø	3P1ØØØØNUBXXA	3G1ØØØØNABD3B	1Ø1ØØØØYYXYYC
	J	Ø	3P1ØØØØNUCXXA	3G1ØØØØNACD3B	1Ø1ØØØØYYXYYC
	K	Ø	3P1ØØØØNDDXXA	3G1ØØØØNADECB	1Ø1ØØØØYYXYYC
	L	Ø	3P1ØØØØNDFXXA	3G1ØØØØNAFECB	1Ø1ØØØØYYXYYC
Method IA (with preservative) Group No. Ø3 Ø4 61 81	A	**See Table III for further information (other than Ø)	3G1**GFØØØXXA	3G1**GFØØØXXB	111YYYYØØØYYC
	B		3P1**GFØØØXXA	3G1**GFØØØD3B	111YYYYØØØYYC
	C		3P1**GFNUAXXA	3G1**GFNAAD3B	111YYYYYYXYYC
	D		3P1**GFNDBXXA	3G1**GFNABECB	111YYYYYYXYYC
	E		3P1**GFNDCXXA	3G1**GFNACECB	111YYYYYYXYYC
	F		3G1**GFNAAXXA	3G1**GFNAAXXB	111YYYYYYXYYC
	G		3G1**GFNABXXA	3G1**GFNABXXB	111YYYYYYXYYC
	H		3P1**GFNUBXXA	3G1**GFNABD3B	111YYYYYYXYYC
	J		3P1**GFNUCXXA	3G1**GFNACD3B	111YYYYYYXYYC
	K		3P1**GFNDDXXA	3G1**GFNADECB	111YYYYYYXYYC
	L		3P1**GFNDFXXA	3G1**GFNAFECB	111YYYYYYXYYC

Source: https://assist.dla.mil -- Downloaded: 2016-10-21T11:02Z
Check the source to verify that this is the current version before use.

TABLE IV. Corresponding coded packaging data for common group items (continued)

MIL-P-116 Method of preservation and group number from Table I	Category Codes: Table II weight/ fragility	Category Codes: Table III Preservative selection	MIL-STD-2073-2 codes: Level A requirements	MIL-STD-2073-2 codes: Level B requirements	MIL-STD-2073-2 codes: Level C requirements
Method II (with preservative) Group No. 62 66 82	A	**See Table III for further information (use exterior preservatives)	4G1**GFØØØXXA	4G1**GFØØØXXB	2E1YYYYØØØXXC
	B		4P1**GFØØØXXA	4G1**GFØØØD3B	2M1YYYYØØØXXC
	C		4P1**GFNUAXXA	4G1**GFNAAD3B	2M1YYYYYYYXXC
	D		4P1**GFNDBXXA	4G1**GFNABECB	2M1YYYYYYYXXC
	E		4P1**GFNDCXXA	4G1**GFNACECB	2M1YYYYYYYXXC
	F		4G1**GFNAAXXA	4G1**GFNAAXXB	2M1YYYYYYYXXC
	G		4G1**GFNABXXA	4G1**GFNABXXB	2M1YYYYYYYXXC
	H		4P1**GFNUBXXA	4G1**GFNABD3B	2M1YYYYYYYXXC
	J		4P1**GFNUCXXA	4G1**GFNACD3B	2M1YYYYYYYXXC
	K		4P1**GFNDDXXA	4G1**GFNADECB	2M1YYYYYYYXXC
	L		4P1**GFNDFXXA	4G1**GFNAFECB	2M1YYYYYYYXXC
Method II (without preservative) Group No. Ø7 65 Ø8 74 11 77 12 83 20	A	Ø	4G1ØØØØØØØXXA	4G1ØØØØØØØXXB	2D1ØØØØØØØXXC
	B	Ø	4P1ØØØØØØØXXA	4G1ØØØØØØØD3B	2M1ØØØØØØØXXC
	C	Ø	4P1ØØØØNUAXXA	4G1ØØØØNAAD3B	2M1ØØYYYYYXXC
	D	Ø	4P1ØØØØNDBXXA	4G1ØØØØNABECB	2M1ØØYYYYYXXC
	E	Ø	4P1ØØØØNDCXXA	4G1ØØØØNACECB	2M1ØØYYYYYXXC
	F	Ø	4G1ØØØØNAAXXA	4G1ØØØØNAAXXB	2M1ØØYYYYYXXC
	G	Ø	4G1ØØØØNABXXA	4G1ØØØØNABXXB	2M1ØØYYYYYXXC
	H	Ø	4P1ØØØØNUBXXA	4G1ØØØØNABD3B	2M1ØØYYYYYXXC
	J	Ø	4P1ØØØØNUCXXA	4G1ØØØØNACD3B	2M1ØØYYYYYXXC
	K	Ø	4P1ØØØØNDDXXA	4G1ØØØØNADECB	2M1ØØYYYYYXXC
	L	Ø	4P1ØØØØNDFXXA	4G1ØØØØNAFECB	2M1ØØYYYYYXXC
Any Group ZZ	Z Any Code	Any Code Any Code	Establish packaging code or SPI		
Any Group	Any Code	Z	Establish packaging code with or without supplemental data.		

Source: https://assist.dla.mil -- Downloaded: 2016-10-21T11:02Z
Check the source to verify that this is the current version before use.

TABLE IV. Corresponding coded packaging data for common group items (continued)

MIL-P-116 Method of preservation and group number from Table I	Category Codes: Table II weight/ fragility	Category Codes: Table III Preservative selection	MIL-STD-2073-2 codes: Level A requirements	MIL-STD-2073-2 codes: Level B requirements	MIL-STD-2073-2 codes: Level C requirements
Method III	A	Ø	1Ø1ØØØØØØØA1A	1Ø1ØØØØØØØA1B	1Ø1ØØYYØØØYYC
Group No.	B	Ø	1Ø1ØØØØØØØEDA	1Ø1ØØØØØØØD3B	1Ø1ØØYYØØØYYC
27 5Ø	C	Ø	1Ø1ØØØØNAAEDA	1Ø1ØØØØNAAD3B	1Ø1ØØYYYYYYYC
37 54	D	Ø	1Ø1ØØØØNABEDA	1Ø1ØØØØNABECB	1Ø1ØØYYYYYYYC
4Ø 56	E	Ø	1Ø1ØØØØNACEDA	1Ø1ØØØØNACECB	1Ø1ØØYYYYYYYC
41 6Ø	F	Ø	1Ø1ØØØØNAAA1A	1Ø1ØØØØNAAA1B	1Ø1ØØYYYYYYYC
85	G	Ø	1Ø1ØØØØNABA1A	1Ø1ØØØØNABA1B	1Ø1ØØYYYYYYYC
	H	Ø	1Ø1ØØØØNABEDA	1Ø1ØØØØNABD3B	1Ø1ØØYYYYYYYC
	J	Ø	1Ø1ØØØØNACEDA	1Ø1ØØØØNACD3B	1Ø1ØØYYYYYYYC
	K	Ø	1Ø1ØØØØNADEDA	1Ø1ØØØØNADECB	1Ø1ØØYYYYYYYC
	L	Ø	1Ø1ØØØØNAFEDA	1Ø1ØØØØNAFECB	1Ø1ØØYYYYYYYC
Method I	A	**	111**GFØØØBDA	111**GFØØØA1B	111YYYYØØØYYC
Group No.	B	See Table III	111**GFØØØEDA	111**GFØØØD3B	111YYYYØØØYYC
Ø1 26	C	for further	111**GFNAAEDA	111**GFNAAD3B	111YYYYYYYYYC
Ø2 3Ø	D	information	111**GFNABEDA	111**GFNABECB	111YYYYYYYYYC
18 31	E		111**GFNACEDA	111**GFNACECB	111YYYYYYYYYC
19 35	F		111**GFNAABDA	111**GFNAAA1B	111YYYYYYYYYC
25 36	G		111**GFNABBDA	111**GFNABA1B	111YYYYYYYYYC
	H		111**GFNABEDA	111**GFNABD3B	111YYYYYYYYYC
	J		111**GFNACEDA	111**GFNACD3B	111YYYYYYYYYC
	K		111**GFNADEDA	111**GFNADECB	111YYYYYYYYYC
	L		111**GFNAFEDA	111**GFNAFECB	111YYYYYYYYYC

Source: https://assist.dla.mil -- Downloaded: 2016-10-21T11:02Z
Check the source to verify that this is the current version before use.

TABLE V. Formulas for material weight and size calculations.

Material weight and size requirement	Formula
Wrap	
a. Compute size of wrap in inches by: Note: LW = length wrap; LI = length item WW = width wrap; WI = width item WWT = wrap weight factor (in lbs/sq. in); HI = height item	a. LW = 2WI + 2HI + 2" WW = LI + HI + 1.5"
b. Compute weight of wrap in pounds by: WtW = weight of wrap	b. WtW = LW x WW x WWT
Cushioning *	c. Roll Cushioning Formula 1
c. Use formula 1 for roll cushioning dimensions in inches NOTE: WC = width of cushioning LC = length of cushioning TC = thickness of cushioning NoT = number of thicknesses	LC = NoT (2 WI + 2HI + 1) WC = LI + HI + 1
d. Use formula 2 for cut cushioning dimensions in inches NOTE: LBP = length bottom pad and length of top pad WBP = width bottom pad TBP = thickness bottom pad	d. Cut Cushioning Formula 2 Bottom and top pads: LBP = LI WBP = WI + 2TC TBP = TC

* Item dimensions in this formula must include all wraps, dunnage and containers already applied to the item.

Source: https://assist.dla.mil -- Downloaded: 2016-10-21T11:02Z
Check the source to verify that this is the current version before use.

TABLE V. Formulas for material weight and size calculations (continued)

Material weight and size requirement	Formula
Note: EP = End pad SP = Side pad LEP = Length end pad WEP = Width end pad TEP = Thickness end pad LSP = Length side pad WSP = Width side pad TSP = Thickness side pad	End pads: LEP = WI + 2TC WEP = HI + 2TC TEP = TC Side pads: LSP = LI WSP = HI TSP = TC
e. Compute weight of cushioning in pounds NOTES: WtC = weight cushioning LC = length cushioning CD = cushioning density	e. Formula 1 WtC = LC x WC x TC x CD WtC = Wt. in lbs.
f. Compute weight of cushioning in pounds	f. Formula 2 WtC = [2(LBP x WBP) + 2 (LEP x WEP) + 2(LSP x WSP)] x TC x CD WtC = wt. in lbs.

* Item dimensions in this formula must include all wraps, dunnage and containers already applied to the item.

Source: https://assist.dla.mil -- Downloaded: 2016-10-21T11:02Z
Check the source to verify that this is the current version before use.

TABLE V. Formulas for material weight and size calculations (continued)

Material weight and size requirement	Formula
Unit container	
g. Compute inside dimensions of container in inches by: NOTE: ILC = inside length container IWC = inside width container IHC = inside height container	g. ILC = LI + 2TC IWC = WI + 2TC IHC = HI + 2TC
h. Compute outside dimensions of container in inches by: OLC = outside length container OWC = outside width container OHC = outside height container TF = thickness factor (thickness of container wall)	h. OLC = ILC + 2TF OWC = IWC + 2TF OHC = IHC + 2TF + thickness of skids(if present) Note: If container is RSC fiberboard, replace 2TF with 4TF
i. Compute weight of container in pounds by: Wt Con = weight of container	i. Wt Con = 2 x fiberboard wt. factor (lbs/sq. in.)[(ILC x IWC) + (ILC x IHC) + (IWC x IHC)(+ 1/2 flap area)] + no. of skids x wood wt. factor (lbs/sq. in.) x skid thickness x skid width x skid length + no. of sleeves x 2 x fiberboard wt. factor [(ILC x IHC) + (IWC x IHC)]
j. Compute flexible barrier size LB = length of barrier WB = width of barrier W = width of item to be enclosed L = length of item or container to be enclosed D = depth of item or container to be enclosed NOTE: a. Minimum size bag shall be 2 1/2 x 3 inches regardless of formula. b. After the size has been calculated extend the dimension of the width to the nearest inch, except for minimum size bag. c. Bag sizes may be adjusted to adequately contain items when automatic packaging equipment is utilized.	j. METHOD IC and IA a. Measure length of the item or container. b. Measure width of the item or container. c. Measure depth of the item or container. 1. Length of barrier equals 2 times width plus 2 times depth plus 3 inches LB = 2W + 2D + 3 inches. 2. Width of barrier equals length plus depth + 3 inches WB = L + D + 3 inches.

Source: https://assist.dla.mil -- Downloaded: 2016-10-21T11:02Z
Check the source to verify that this is the current version before use.

TABLE V. Formulas for materials weight and size calculations. (continued)

Material weight and size requirement	Formula
k. Compute flexible barrier size by the following formula:	k. METHOD II a. Measure length of the item or container. b. Measure width of the item or container. c. Measure depth of the item or container. 1. Length of barrier equals 2 times width, plus 2 times depth, plus 5 in. 2. Width of barrier equals length of the item plus depth, plus 5 in.
l. Compute quantity of desiccant for Method II packs using barrier (1 unit equals one ounce) U = Units of desiccant C = 0.011 when the area of the barrier is in sq. in. C = 1.6 when area in sq. ft. A = Area of barrier material (sq. in. or sq. ft.) X_1 = 8 for cellulosic material (including wood) and other materials not otherwise categorized X_2 = 3.6 for bound fibers (synthetic fiber, or vegetable fibers bound with rubber) X_3 = 2 for glass fibers	l. $U = CA + X_1D + X_2D + X_3D + X_4D$

Source: https://assist.dla.mil -- Downloaded: 2016-10-21T11:02Z
Check the source to verify that this is the current version before use.

TABLE V. Formulas for material weight and size calculations (continued)

Material weight and size requirement	Formula
X_4 = 0.5 for synthetic foams and rubber D = Pounds of dunnage (other than metal) within barrier	
m. Compute quantity of desiccant for Method II packs using metal containers U = Units of desiccant K = 0.0007 when the volume is in cubic inches K = 1.2 when the volume is in cubic feet V = Volume within the barrier in cubic inches or cubic feet X_1 = 8 for cellulosic material (including wood) and other materials not otherwise categorized X_2 = 3.6 for bound fibers (synthetic fibers, or vegetable fibers bound with rubber) X_3 = 2 for glass fibers X_4 = 0.5 for synthetic foams and rubber D = Pounds of dunnage (other than metal) within the barrier	m. $U = KV + X_1D + X_2D + X_3D + X_4D$

Source: https://assist.dla.mil -- Downloaded: 2016-10-21T11:02Z
Check the source to verify that this is the current version before use.

APPENDIX C

TABLE VI. Cushioning correlation for drops of 30 inches

Bound Fiber

Type II

G's	Thickness	psi
60	2"	.035 - .04
40	3"	.035 - .04
30	4"	.035 - .05
20	5"	.038 - .08

Type III

G's	Thickness	psi
50	2"	.04 - .09
40	3"	.04 - .10
30	4"	.04 - .10
20	5"	.06 - .15

Type IV

G's	Thickness	psi
50	2"	.035 - .06
40	3"	.035 - .09
30	4"	.05 - .10
20	6"	.06 - .15

Bound Fiber
Load per square inch to compress 50%

Med. Soft II	6 ounces
Med. Firm III	9 ounces
Firm IV	14 ounces

Polystyrene (1.5 pcf)

G's	Thickness	psi
80	2"	.5 - 1.0
60	3"	.7 - 1.4
40	4"	.9 - 1.25
30	5"	1.0 - 1.6

Polyethylene (2 pcf)

G's	Thickness	psi
60	2"	.4 - .6
50	3"	.3 - 1.0
40	4"	.35 - 1.0
30	6"	.4 - 1.5

Polyurethane

Polyester (2.0 pcf)

G's	Thickness	psi
50	2"	.15 - .25
40	3"	.10 - .50
30	4"	.2 - .50
20	5"	.35 - .40

Polyester (4.0 pcf)

G's	Thickness	psi
60	2"	.06 - .40
50	2"	.10 - .30
40	3"	.08 - .40
30	5"	.20 - .30

Polyester (1.5 pcf)

G's	Thickness	psi
70	2"	.07 - .20
60	3"	.06 - .6
40	4"	.10 - .5
30	5"	.20 - .40

Polyether (2.0 pcf)

G's	Thickness	psi
40	2"	.04 - .10
30	3"	.05 - .14
20	4"	.7 - .14

Polyether (4.0 pcf)

G's	Thickness	psi
60	2"	.04 - .20
40	3"	.04 - .20
30	4"	.06 - .25
20	5"	.10 - .20

Polyether (1.5 pcf)

G's	Thickness	psi
40	2"	.03 - .09
30	3"	.035 - .10
20	4"	.05 - .12

This table permits quick comparison between cushioning materials based on: item fragility, capacity of different cushioning materials to absorb energy, and cushion thickness.

Source: https://assist.dla.mil -- Downloaded: 2016-10-21T11:02Z
Check the source to verify that this is the current version before use.

APPENDIX C

TABLE VII. Exterior shipping containers - selection by maximum weight of contents and levels of protection

Specification	Description	Weight of Contents (lbs.,max.)	Level	Remarks
PPP-B-636	Boxes; fiberboard			
	Weather-resistant	1/	B,C	1/
	Domestic	1/	C	1/
PPP-B-591	Boxes; wood cleated, fiberboard			Weight limitation of specification shall apply to style selection
	Weather-resistant	200	B,C	
	Domestic	400	C	
PPP-B-585	Boxes; wood, wire-bound			
	Class 1	500	C	
	Class 2	400	B,C	
	Class 3	300	A,B,C	
MIL-B-43666	Box, Shipping Consolidation			Used as insert in cargo transporters such as CONEX, SEAVAN, or MILVAN or as separate exterior shipping containers
	Type I - wood cleated	Weight varies with size	A,B,C	
	Type II - plywood wirebound		A,B,C	
	Type III - fiberboard		B,C	
MIL-P-26342	Pallet box, fiberboard, expendable, for air shipment			For size and maximum load limitations see MIL-P-26342
	Domestic	800	C	
	Weather-resistant	800	B,C	
PPP-B-601	Boxes; wood, cleated-plywood			Weight limitation of specification shall apply to style selection
	Domestic	1,000 2/	B,C	
	Overseas	1,000	A,B,C	
PPP-B-576	Boxes, Wood, Cleated, Veneer, Paper Overlaid			
	Class 1	400	C	
	Class 2	350	B, C	
PPP-B-640	Boxes; fiber, currugated, triple wall	3/		
	Non-weather resistant		C	
	Weather resistant		B,C	

Source: https://assist.dla.mil -- Downloaded: 2016-10-21T11:02Z
Check the source to verify that this is the current version before use.

APPENDIX C

TABLE VII. Exterior shipping containers - selection by maximum weight of contents and levels of protection (continued)

Specification	Description	Weight of Contents (Lbs.,Max)	Level	Remarks
PPP-B-621	Boxes; wood, nailed and lock-corner			May be modified by inclusion of skids
	Overseas	1,000	A,B,C	
	Domestic	600	B,C	
MIL-B-26195	Boxes; wood-cleated, skidded, load bearing base			Size imitation - 16'L.
	Domestic	2,500	B,C	
	Overseas	2,500	A,B,C	Only plywood superstructure shall be used for Level A.
MIL-B-2427	Box, ammunition packing; wood, nailed		A,B,C	Top opening or end opening, with or without handles
MIL-B-46506	Boxes, ammunition packing, wood, wirebound		A,B,C	Top opening, with or without handles
PPP-B-1672	Boxes, shipping, reusable with cushioning		B,C	See Appendix E, Table I for weight and size restrictions
MIL-C-4150	Case, Transit and Storage, Waterproof and Watervaporproof	250	A,B,C	Reusable, heavy duty, size as specified
MIL-C-11133	Crate; wood, open, wirebound			Slatted-style
	Grade A (overseas)	1,000	A,B,C	
	Grade B (domestic)	1,000	B,C	
MIL-C-9897	Crates; slotted angle, steel or aluminum	3,000	A,B,C	For lightweight air frames or bulky items; open or sheathed, with or without skids
MIL-C-52950	Crates, wood, open and covered	4,000	A,B,C	For size and weight restrictions, see latest issue of MIL-C-52950

Source: https://assist.dla.mil -- Downloaded: 2016-10-21T11:02Z
Check the source to verify that this is the current version before use.

APPENDIX C

TABLE VII. Exterior shipping containers - selection by maximum weight of contents and levels of protection (continued)

Specification	Description	Weight of Contents (Lbs., Max)	Level	Remarks
MIL-C-3774	Crates, wood, open Type I Type II	 12,000 16,000	A,B,C	Bolted or nailed assembly; size limitations: Type I 16'x 8'x 8' Type II 40'x 8'x 16'
MIL-C-104	Crates; wood, lumber and plywood sheathed, nailed and bolted	30,000	A,B,C	Size limitation 30'Lx9'Wx10'H (unless otherwise specified)
MIL-C-25731	Crates; wood, for domestic and overseas shipment of air frame components	2,000	A,B,C	Open and sheathed; non-, semi-, and fully demountable; see MIL-C-25731 for size limitations
MIL-C-11264	Container, wood, reusable	----	A,B	For vehicular assemblies weighing over 1600 pounds.
PPP-D-711	Drum; metal, steel	-	A,B,C	Shipment of non-corrosive material; 55 gal. capacity
PPP-D-723	Drum; fiber	550	B,C	
DOT 22A, DOT 22B, and DOT 22C	Drum, plywood	-	A,B,C	Title 49 CFR
PPP-D-732	Drums; metal, 55 gallon, reconditioned (for shipment of non-corrosive material)	-	A,B,C	Shipment of non-corrosive material
MIL-D-6054	Drum; metal	-	A,B,C	MS27684, MS27683; exterior use; 3 to 80 gal. capacity

Source: https://assist.dla.mil Downloaded: 2016-10-21T11:02Z
Check the source to verify that this is the current version before use.

APPENDIX C

TABLE VII. Exterior shipping containers - selection by maximum weight of contents and levels of protection (continued)

Specification	Description	Weight of Contents (lbs.,max.)	Level	Remarks
ASO Dwg. P069	Container, Molded, Reusable	4	A,B,C	For circuit boards and and modules; See Appendix E, Table I, Type VI
ASO Dwg. 13414	Container, Modular, Reusable	120	A,B,C	For major repairables; See Appendix E, Table I, Type VII
ASO Dwg. 15024	Container, Shipping and Storage	40	A,B,C	For gyroscopic instruments; See Appendix E, Table I, Type VIII

1/ Size and weight limitations (see appropriate tables in PPP-B-636).

2/ Greater weights of contents may be permitted. See 6.1.2 of PPP-B-601.

3/ Maximum weight not specified; selection of style, supporting pallets or skids should be governed by anticipated load. Boxes are to be used when loads exceed limits of PPP-B-636 boxes.

Source: https://assist.dla.mil -- Downloaded: 2016-10-21T11:02Z
Check the source to verify that this is the current version before use.

APPENDIX D

DEVELOPMENT OF PACKAGING REQUIREMENTS FOR PACKAGING OF KITS (PARTS AND MODIFICATION)

10. Scope. This appendix covers the development of the packaging of parts kits and modification kits (see 5.3.6).

20. Preservation. Level A, B or C shall be as specified by the acquiring agency for all items within the kits, including Government furnished property (GFP) or spare parts (to be assembled into kits) (see 6.1). Methods of preservation shall be determined in accordance with Appendix C and procedures contained herein.

20.1 Consolidation of different items within a method or submethod of preservation. Hazardous items will be packaged in the same container only if they are compatible. Items of different physical characteristics may be consolidated within the same method or submethod of preservation under the following circumstances:

a. The items to be consolidated are all part of the same individual kit.

b. The method of preservation shall afford adequate protection to the most critical item contained therein.

c. The area of the protective barrier shall not be increased by the addition of noncritical items to the extent that the package life will be shortened due to the increase in moisture vapor transmission or that a substantial increase in desiccant will be required.

d. Items of a delicate nature shall not be subjected to damage from rugged items contained within the same package.

e. Noncritical items of odd shapes or having sharp protrusions will not damage protective barriers.

f. Items of dissimilar metals subject to damage from electrolytic action shall be insulated with suitable material to prevent forming of galvanic cells.

g. Antifriction bearings, associated parts (races, balls and rollers) and subassemblies which are components of repair and overhaul kits shall be prepared for shipment in accordance with the requirements of MIL-B-197.

h. Use of hygroscopic cushioning or dunnage material shall be held to a minimum. Newsprint or excelsior shall not be used. Loose fill expanded polystyrene shall not be used for material to be delivered to the Navy.

Source: https://assist.dla.mil -- Downloaded: 2016-10-21T11:02Z
Check the source to verify that this is the current version before use.

i. Shims, gaskets and items of delicate or fragile nature shall be protected with cushioning, die-cut dunnage, fiberboard supports, fiberboard sandwiches, etc.. to ensure shape and serviceability are maintained.

j. Electromagnetic and electrostatic sensitive items shall be provided protection from degradation with suitable anti-static materials.

20.2 Application of preservative compounds or oils.

20.2.1 Kits procured for oxygen equipment. A preservative compound or oil shall not be applied to any item that may come into contact with oxygen.

20.2.2 Preservation procedures. All items are to be thoroughly cleaned and dried in accordance with MIL-P-116 before application of preservative compounds or oils. In no instance shall a preservative compound or oil be applied over an operational grease or oil.

20.2.3 Items susceptible to corrosion (iron, steel, magnesium, etc.). A preservative compound or oil will be applied unless harmful to the item. Preservative compounds are preferred; however, preservative oils may be used when compounds are difficult to remove, or are not feasible due to size, configuration or application of the item.

30. Unit preservation.

30.1 Physical protection. Methods of preservation when necessary for physical protection shall be supplemented by cushioning, wraps and containers of the minimum size and weight to afford such protection.

30.2 Segregation of items within packs. Care will be used to ensure that items, which have been segregated due to similar characteristics wherein identification by visual observation would be difficult, are kept segregated and individually identified. Also, it is desirable to segregate components of two related repairable assemblies within the kit. For example, components relating to the pump shall not be intermingled with components relating to the motor. Segregation of items within a kit shall be accomplished by wraps, bags, boxes, dividers, container separations, tubes, skin or blister packs or other approved means.

30.3 Skin packaging. When skin packaging is used for kits, provisions shall be incorporated into the design layout for folding whereby the size of the skin pack can be reduced to a compact unit pack. This may be accomplished by slotting, scoring, creasing, perforating or any comparable method.

30.3.1 Skin packaging metals. When skin packaging is used, segregated metal items coated with preservative shall be wrapped with a greaseproof material unless the skin packaging material, ink, and backing board in contact with the item are certified as noncorrosive and greaseproof. Bare metal items not coated with a preservative compound shall be wrapped with a

Source: https://assist.dla.mil -- Downloaded: 2016-10-21T11:02Z
Check the source to verify that this is the current version before use.

neutral material unless the skin packaging material, ink, and backing board in contact with the item are certified noncorrosive.

30.3.2 Skin packaging shims, gaskets, etc. When skin packaging is used on items such as thin shims, paper gaskets, etc., that cannot be removed without damage to the item due to shrink film bonding of the item to the backing board, the item shall be placed in a bag or other suitable protective media prior to film application to provide ease of removal.

40. Packing. Exterior shipping containers shall conform to Level A, B or C requirements of this standard as specified in the contract or order (see 6.1).

50. Marking and identification.

50.1 General. Unit, intermediate and shipping containers shall be marked and identified according to MIL-STD-129. When a kit is composed of more than one shipping container, the same items shall always be packed in the same numbered box.

50.2 Hazardous materials. All interior packs and shipping containers for materials regulated as hazardous under title 49 CFR or AFR 71-4/DLAM 4145.3/ TM 38-250/NAVSUP PUB 505/MCO P4030.19 shall be marked, regardless of exemption for mode of transportation, with proper shipping name of the item, flash point of all liquids having a flash point below 200°F, and percentage concentration of acids and corrosive liquids.

50.3 Additional marking. Additional marking and identification may be required to identify parts, unitized packs, and consolidated items. Set markings such as 1 of 3, 2 of 3, 3 of 3, etc. of MIL-STD-129 shall apply when the kit is composed of more than one shipping container.

50.3.1 Nonconsolidated items. Items which do not lend themselves to consolidation shall be identified with sequential or segregation number.

50.3.2 Individually packed items. When the method of preservation requires the items to be individually packed, the unit container shall be identified by a sequential or segregation number.

50.3.3 Unitized items. Each unitized or consolidated group of items shall be identified with a sequential or segregation number.

50.3.4 Skin packs. When skin packs are used, each item or unitized like items shall be identified by sequential numbers. The numbers shall be placed on the backing board in such a manner as to prevent smudge, smear, or fade-out when skin covering is applied.

50.3.5 Packaging kit contents list. A kit contents list containing all items in each kit shall be prepared in accordance with applicable data item description DI-L-7137 (see Appendix J). The list shall be included as part of identification and marking with each kit. Alternate form of the kit list format, such as that shown in MIL-STD-129 or contractor's own format is

Source: https://assist.dla.mil -- Downloaded: 2016-10-21T11:02Z
Check the source to verify that this is the current version before use.

permissible provided all essential elements are reflected. The kit contents list shall be attached to the SPI as specified in Appendix K. For kits containing any item of hazardous material, one copy of the list shall be forwarded by mail direct to the acquiring activity annotated as follows (for each hazardous item): The proper shipping name of the item; flash point of all liquids having a flash point below 200°F (94.33°C); boiling point of flammable and combustible liquids if the flash point is less than 73° F; radioactive isotope and quantity (20.2.11.1 of Appendix F).

50.3.5.1 Contents list of skin-packaged kits. For skin-packaged kits, the packaging kit contents list shall be on the backing board. Space and readability permitting, lists may be on the face of the backing board. Only when space does not permit will lists be located on the back of the skinned package. In such instances, label cement (MMM-A-178) shall be used in securing these lists.

Source: https://assist.dla.mil -- Downloaded: 2016-10-21T11:02Z
Check the source to verify that this is the current version before use.

APPENDIX E

SELECTION OF MULTIAPPLICATION CONTAINERS

10. Scope. This appendix lists reusable multiapplication containers and provides the information necessary to select the container which will protect a given item against physical damage. The basic preservation requirements are governed by Appendix C of this standard.

10.1 Application. The DOD packaging activity, contractor, subcontractor, or vendor shall select the appropriate multiapplication container for those depot repairable items which fall within the parameters of size (allowing for the wrapping material and barrier), weight, and fragility given in Table I. Although these integral multiapplication containers are designed for the purpose of protecting fragile items, the pack reuseability, versatility, and low labor costs of insertion and removal of the item make it cost effective for many less fragile and non-repairable items.

20. General requirements.

20.1 Dynamic cushioning values. Shock values of Table I were determined by instrumented free fall drop testing in accordance with Method 5007 of FED-STD-101.

20.2 Item size range. The versatility of the multiapplication containers, that is, the large number of items (identified individually by NSN) which can be packed in one type and size, is made possible by design of the shock reduction insert. Where applicable, the range of item dimensions results from precompression of the star-shaped cushion cavity or of the fingers of the convoluted foam without adversely affecting the dynamic cushioning properties. Items which do not fill the cushion cavity sufficiently to provide a firm grip on the item and which are shorter than the length of the cavity shall be prevented from moving by filling the void with any cushioning material compatible with the item and the foam. Items whose dimensions exceed the maximum will precompress the cushioning more than normally and thus increase the shock input. This is an important consideration when item dimensions exceed the recommended maximum.

20.3 Techniques to assure preservation/item integrity. The following packaging techniques shall be employed when using multiapplication containers.

20.3.1 Barrier rupture. Items preserved by methods requiring closed or sealed barriers shall be wrapped (with corners and protuberances cushioned, if need be) to prevent barrier rupture.

20.3.2 Stress areas. Items with handles, knobs, or other protrusions shall be wrapped or otherwise protected and secured to facilitate equal distribution of shock forces over entire surface of the item and thus prevent damaging shock forces to the protrusions.

Source: https://assist.dla.mil -- Downloaded: 2016-10-21T11:02Z
Check the source to verify that this is the current version before use.

20.3.3 Desiccant placement. When desiccant is required, the bags shall be placed so that they are not load bearing. If this is not possible, stress on the bags shall be relieved by strategic placement of cushioning or dunnage. Desiccant shall not be placed in direct contact with the item. When desiccant is to be placed next to a metal surface, the desiccant shall be insulated from the metal surface with MIL-B-121, Grade A barrier material.

30. Detail requirements.

30.1 Type and use. Construction details and material requirements of the short life multiapplication containers shall conform to PPP-B-1672 for Types I through IV. Long life containers (Types VI through VIII) shall be in accordance with the cognizant Government design activity requirements or drawing; ie. Type VI shall conform to Naval Aviation Supply Office (ASO) drawing P069, Type VII to ASO drawing 13414 and Type VIII to ASO drawing 15024, respectively.

30.1.1 Type I. Consists of a polyurethane foam cushion insert with a die-cut, star shaped, vertical cavity and top and bottom pads of the same material assembled in the container. Type I is used for packaging fragile items, either rectangular or cylindrical in shape, such as meters, gauges, attitude and air speed indicators. Items packaged in this star pack type are inserted (loaded) into the cavity from the top of the container prior to placing the top pad in place.

30.1.2 Type II. Consists of folding convoluted polyurethane foam cushion bonded to container board. Although the cushioning provides protection against shock, it essentially holds the item in place by precompression of the convoluted tips. Type II is used for circuit boards and electronic modules. It is also used for packing glass envelope electronic tubes or other items whose depth does not exceed the limits shown in Table I.

30.1.3 Type III. Consists of a telescoping container with bonded convoluted (some end and side pads are flat sheet stock) polyurethane foam cushioning which forms an oblong cavity. Type III is used to pack equipment such as receiver-transmitters, amplifiers, power supply units, and electronic indicators.

30.1.4 Type IV. Consists of a two piece (top and bottom) polyurethane foam insert, which forms a star shaped cavity when the two pieces are mated in conjunction with end pads of flat sheet stock. The insert components and end pads are bonded in place in a half telescoping container conforming to PPP-B-636, Type CF, Style DBLCC. The cushioning insert is similar to the Type I star pack insert except that it is cut along (horizontal to) its greatest dimensional length to facilitate insertion (loading) and extraction of relatively long, rectangular or cylindrical items such as voltage regulators, electronic receivers, panels, transmitters, couplers and amplifiers.

30.1.5 Type VI. Consists of two halves of polyethylene blow molded container with polyurethane cushioning and a static free cushioned bag. This is used to ship circuit cards and similar type components.

Source: https://assist.dla.mil - Downloaded: 2016-10-21T11:02Z
Check the source to verify that this is the current version before use.

30.1.6 Type VII. Consists of a plastic type container with bonded convoluted polyurethane foam cushioning which forms a cavity.

30.1.7 Type VIII. Consists of plastic type container with a coiled steel cable shock mounted platform to which is strapped highly sensitive equipment.

30.2 Identification of multiapplication containers. All containers are assigned NSNs (see Table I).

30.3 Coded data. MIL-STD-2073-2 provides codes to identify each type of multiapplication container. This code, plus dimensions, completely specifies the type and size of container in acquisition documents.

30.4 Packaging design validation (see Appendix B). The validation of packaging designs using multiapplication containers shall be as follows:

a. Items which meet the weight, dimension, and fragility factor of Table I do not require design validation.

b. In cases where the fragility factor of an item is unknown, packaging validation testing to confirm the selection of a multiapplication container shall be conducted in accordance with the provision of Appendix B.

40. Availability.

40.1 General Services Administration (GSA). Types I through IV multiapplication containers are stocked by GSA (Federal Supply Service). DOD and Federal Agencies may obtain them from GSA by MILSTRIP and FEDSTRIP procedures. When authorized by the administrative contracting officer and with concurrence of the GSA regional office affected, Government contractors may buy direct from GSA. The Government may also elect to supply these packs to contractors as government furnished property.

40.2 Aviation Supply Office. Types VI through VIII are stocked by the Aviation Supply Office. DoD and Federal Agencies may obtain them from ASO by MILSTRIP and FEDSTRIP procedures. The Government may also elect to supply these packs to contractors as government furnished property.

40.3 Commercial Sources. Suppliers of the multiapplication containers are located nationwide. Names of these suppliers are available from the Contract Administration Activity.

Source: https://assist.dla.mil -- Downloaded: 2016-10-21T11:02Z
Check the source to verify that this is the current version before use.

TABLE I. Multiapplication Container Selection.

PPP-B-1672, Type I, Vertical Star, (MIL-STD-2073-2, CODE NR)

Container ID (inches) (National Stock Number)	Recommended max. bare item dimensions (in)	Range item weight (lbs.)	Maximum Shock (Gs) transmitted to item
6 x 6 x 10 (8115-00-192-1603)	3 Dia x 6	1.0 - 1.5	30 - 40
		1.6 - 2.25	25 - 29
		2.3 - 3.0	30 - 40
	3 x 3 x 6	1.5 - 4.0	30 - 40
8 x 8 x 12 (8115-00-192-1604)	3 x 3 x 8	1.5 - 4.0	30 - 40
	4 Dia x 8	3.0 - 7.5	25 - 29
		7.6 - 8.5	30 - 40
	4 x 4 x 8	3.0 - 5.0	25 - 29
		5.1 - 7.0	30 - 40
	5 Dia x 8	3.5 - 5.5	30 - 40
10 x 10 x 12 (8115-00-192-1605)	4 Dia x 6	2.0 - 3.0	30 - 40
		3.1 - 4.5	25 - 29
		4.6 - 5.0	30 - 40
	5 Dia x 6	3.0 - 6.0	30 - 40
	6 Dia x 6	4.5 - 7.0	30 - 40
	5 x 5 x 6	4.0 - 9.0	30 - 40
12 x 12 x 14 (8115-00-134-3655)	5 Dia x 8	3.5 - 4.5	25 - 29
		4.6 - 8.5	20 - 24
	6 Dia x 8	5.0 - 7.0	25 - 29
		7.1 - 13.0	20 - 24
	5 x 5 x 8	3.0 - 5.0	30 - 40
		5.1 - 7.0	25 - 29
		7.1 - 11.0	20 - 24
	6 x 6 x 8	5.0 - 7.0	30 - 40
		7.1 - 10.0	25 - 29
		10.1- 12.0	20 - 24

Source: https://assist.dla.mil -- Downloaded: 2016-10-21T11:02Z
Check the source to verify that this is the current version before use.

TABLE I. Multiapplication Container Selection. (continued)

PPP-B-1672, Type I, Vertical Star, (MIL-STD-2073-2, CODE NR)

Container ID (inches) (National Stock Number)	Recommended max. bare item dimensions (in)	Range item weight (lbs.)	Maximum Shock (Gs) transmitted to item
12 x 12 x 18 (8115-00-050-5237)	5 Dia x 10	4.0 - 5.0	25 - 29
		5.1 -11.0	20 - 24
	6 Dia x 10	6.0 - 8.0	25 - 29
		8.1 -16.0	20 - 24
	5 x 5 x 10	4.0 - 6.0	30 - 40
		6.1 - 8.0	25 - 29
		8.1 -13.0	20 - 24
	6 x 6 x 10	8.0 -10.0	30 - 40
		10.1 -14.0	25 - 29
		14.1 -20.0	20 - 24
14 x 14 x 16 (8115-00-134-3656)	6 Dia x 10	6.0 -15.0	25 - 29
	7 Dia x 10	8.0 -14.0	20 - 24
		14.1 - 7.0	24 - 29
		17.1 -20.0	30 - 40
	6 x 6 x 10	5.0 - 7.0	30 - 40
		7.1 - 9.0	24 - 29
		9.1 -12.0	20 - 24
	7 x 7 x 10	6.5 - 9.0	30 - 40
		9.1 -12.0	25 - 29
		12.1 -21.0	20 - 24
		21.1 -23.0	25 - 29

Source: https://assist.dla.mil -- Downloaded: 2016-10-21T11:02Z
Check the source to verify that this is the current version before use.

TABLE I. Multiapplication Container Selection. (continued)

PPP-B-1672, Type II, folding convoluted (MIL-STD-2073-2, CODE NS)

Container ID (inches) (National Stock Number)	Recommended max. bare item dimensions (in)	Typical item weight (lbs.)	NOTE: Because items assigned to these packs are not fragile dynamic cushioning values have not been determined.
6 x 5 x 2-1/2 (8115-00-787-2142)	5 x 4-1/2 x 1-1/4	0.5	
6 x 5 x 3-1/2 (8115-00-787-2147)	5 x 4-1/2 x 2-1/4	1.0	
9 x 6 x 2-1/2 (8115-00-101-7638)	8 x 5-1/2 x 1-1/4	0.9	
9 x 6 x 3-1/2 (8115-00-101-7638)	8 x 5-1/2 x 2-1/4	1.8	
10 x 10 x 3-1/2 (8115-01-057-1244)	9 x 9-1/2 x 2-1/4	1.8	
12 x 8 x 2-1/2 (8115-00-787-2146)	11 x 7-1/2 x 1-1/4	1.8	
12 x 8 x 3-1/2 (8115-00-787-2148)	11 x 7-1/2 x 2-1/4	3.6	
13 x 13 x 3-1/2 (8115-01-057-1243)	12 x 12-1/2 x 2-1/4	4.3	
16 x 16 x 3-1/2 (8115-01-057-1245)	15 x 15-1/2 x 2-1/4	8.6	
18 x 12 x 2-1/2 (8115-01-019-4085)	17 x 11-1/2 x 1-1/4	4.3	
18 x 12 x 3-1/2 (8115-01-019-4084)	17 x 11-1/2 x 2-1/4	8.6	
24 x 16 x 3-1/2 (8115-01-093-3730)	23 x 15 x 2-1/4	10.0	

Source: https://assist.dla.mil -- Downloaded: 2016-10-21T11:02Z
Check the source to verify that this is the current version before use.

TABLE I. Multiapplication Container Selection (continued)

PPP-B-1672, Type III, telescoping encapsulated (MIL-STD-2073-2, CODE NV)

Container ID (inches) (National Stock Number)	Recommended max. bare item dimensions (in)	Range item weight (lbs.)	Maximum Shock (Gs) transmitted to item
30 x 16 x 14 (8115-00-516-0242)	24 x 11 x 9	28 - 48 49 - 54	30 - 39 40 - 50
32 x 12 x 14 (8115-00-519-1825)	26 x 6 x 8	12 - 20 20 - 29 30 - 33	30 - 39 25 - 29 40 - 50
26 x 9 x 9 (8115-01-015-1313)	20 x 5 x 5	20 (max.)	50 (max.)
24 x 14 x 14 (8115-00-550-3558)	18 x 8 x 8	13 - 16 17 - 38	30 - 39 25 - 29
20 x 14 x 9 (8115-00-516-0251)	16 x 10 x 5	6 - 7 7 - 8	30 - 39 40 - 50
25 x 14 x 14 (8115-00-550-3574)	13 x 7 x 7	7 - 14 15 - 16 17 - 19	20 - 24 30 - 39 40 - 50
32 x 18 x 16 (8115-01-015-1315)	24 x 13 x 11	80 (max.)	20 - 24
34 x 24 x 18 (8115-01-015-1314)	25 x 18 x 12	90 (max.)	35 (max.)
24 x 18 x 16 (8115-01-015-1312)	18 x 13 x 11	20 - 39 40 - 50	25 - 29 30 - 39
30 x 27 x 14 (8115-01-094-6520)	18 x 18 x 5	26 - 45 46 - 50	21 - 28 23 - 30

Source: https://assist.dla.mil -- Downloaded: 2016-10-21T11:02Z
Check the source to verify that this is the current version before use.

TABLE I. Multiapplication Container Selection. (continued)

PPP-B-1672, Type IV, horizontal star (MIL-STD-2073-2, CODE NW)

Container ID (inches) (National Stock Number)	Recommended max. bare item dimensions (in)	Range item weight (lbs.)	Maximum Shock (Gs) transmitted to item
20 x 14 x 14 (8115-00-010-8956)	14 x 5-1/8 x 5-3/8	6 - 14	25 - 29
		15 - 18	30 - 39
		19 - 21	40 - 50
	14 x 7 x 7	10 - 14	30 - 39
		15 - 19	20 - 24
		20 - 23	25 - 29
		24 - 26	30 - 39
		27 - 29	40 - 50
22 x 16 x 16 (8115-01-006-7257)	16 x 6-3/8 x 6-3/8	8 - 20	25 - 29
		21 - 27	30 - 39
		28 - 31	40 - 50
	16 x 7-1/4 x 7-1/4	11 - 16	25 - 29
		17 - 21	20 - 24
		22 - 24	25 - 29
		25 - 27	30 - 39
		28 - 31	40 - 50

Source: https://assist.dla.mil -- Downloaded: 2016-10-21T11:02Z
Check the source to verify that this is the current version before use.

TABLE I. Multiapplication Container Selection. (continued)

Type VI Molded Reusable Container Assy for Circuit Cards and Modules
Naval Aviation Supply Office Drawing No. P069 (MIL-STD-2073-2, Code NY)

Container ID (inches) (National Stock Number)	* Recommended max. load size (in)	Range item weight (lbs.)	
11.25 x 8.25 x 2.125 (8145-00-260-9556)	8.5 x 6.0 x 1.0	0 - 3	NOTE: Because items assigned to these packs are not fragile dynamic cushioning values have not been determined.
11.25 x 8.75 x 4.5 (8145-00-260-9548)	8.5 x 6.0 x 3.25	0 - 3	
13.25 x 10.75 x 2.125 (8145-00-260-9559)	10.5 x 8.0 x 1.00	0 - 4	
13.25 x 10.75 x 4.5 (8145-00-260-9562)	10.5 x 8.0 x 3.25	0 - 4	
6.75 x 5.0 x 2.0 (8145-01-014-0440)	5.0 x 3.0 x 1.0	0 - 2	
19.75 x 13.75 x 4.5 (8145-01-012-4088)	17.0 x 11.0 x 2.62	0 - 4	

* Includes wrap, barrier, bag, cushioned pouch and other packaging materials as required.

Source: https://assist.dla.mil -- Downloaded: 2016-10-21T11:02Z
Check the source to verify that this is the current version before use.

TABLE I. Multiapplication Container Selection. (continued)

Type VII, Modular Reusable Containers for Packaging Major Repairables
Naval Aviation Supply Office Drawing No. 13414 (MIL-STD-2073-2, Code NZ)

Container ID (inches) (National Stock Number)	* Recommended max. load size (in)	Range item weight (lbs.)	Maximum Shock (Gs) transmitted to item
10 x 10 x 14 (8145-00-301-2987)	4 x 4 x 8	6.0	40 - 50
10 x 10 x 18 (8145-00-288-1396)	4 x 4 x 12	7.0	40 - 50
14.5 x 13 x 10 (8145-00-553-1539)	8.5 x 7 x 4	9.0	40 - 50
14 x 14 x 12 (8145-00-519-6384)	8 x 8 x 6	11.0	40 - 50
12 x 12 x 18 (8145-00-288-1397)	6 x 6 x 12	11.0	40 - 50
20 x 13 x 12 (8145-00-485-8256)	14 x 7 x 6	17.0	40 - 50
16 x 16 x 15 (8145-00-522-6907)	10 x 10 x 9	20.0	40 - 50
18 x 14.5 x 19 (8145-00-449-8424)	12 x 8.5 x 13	25.0	40 - 50
22.5 x 21 x 11.5 (8145-01-044-3289)	16.5 x 15 x 5.5	33.0	40 - 50
22 x 16 x 17 (8145-00-540-1762)	16 x 10 x 11	31.3	40 - 50
29 x 14.5 x 14 (8145-00-501-9138)	23 x 8.5 x 8	28.0	40 - 50

* Includes interior carton and associated blocking and bracing when applicable.

Source: https://assist.dla.mil -- Downloaded: 2016-10-21T11:02Z
Check the source to verify that this is the current version before use.

TABLE I. Multiapplication Container Selection. (continued)

Type VII, Modular Reusable Containers for Packaging Major Repairables
Naval Aviation Supply Office Drawing No. 13414 (MIL-STD-2073-2, Code NZ)

Container ID (inches) (National Stock Number)	* Recommended max. load size (in)	Range item weight (lbs.)	Maximum Shock (Gs) transmitted to item
28 x 18 x 13 (8145-00-549-6647)	22 x 12 x 7	35.0	40 - 50
34 x 18 x 15 (8145-00-536-4925)	28 x 12 x 9	44	40 - 50
30 x 18 x 19 (8145-00-449-8427)	24 x 12 x 13	50	40 - 50
22.5 x 21 x 22.5 (8145-00-499-9808)	16.5 x 15 x 16.5	55	40 - 50
27 x 27 x 17 (8145-00-485-8250)	21 x 21 x 11	70	40 - 50
34 x 24 x 17 (8145-00-514-2798)	28 x 18 x 11	78	40 - 50
28 x 24.5 x 20.5 (8145-00-026-2369)	22 x 18.5 x 14.5	80	40 - 50
40 x 24 x 18 (8145-00-529-8585)	34 x 18 x 12	85	40 - 50
36 x 20 x 27 (8145-01-008-3683)	30 x 14 x 21	120	40 - 50
27 x 27 x 32 (8145-01-010-3776)	21 x 21 x 26	110	40 - 50

* Includes interior carton and associated blocking and bracing when applicable.

Source: https://assist.dla.mil -- Downloaded: 2016-10-21T11:02Z
Check the source to verify that this is the current version before use.

TABLE I. Multiapplication Container Selection. (continued)

Type VIII, Shipping & Storage Containers for Gyroscopic Instruments
Naval Aviation Supply Office Drawing No. 15024 (MIL-STD-2073-2, Code MY)

Shipping Container ID (Inches) (National Stock No.)	*Max. load size without handling case (in.)	Handling Case, OD (National Stock No.)	Item size using handling case	Item Weight (lbs.)	Max shock (Gs) transmitted to item
30 x 26.38 x 25.5 (8145-01-016-3451)	13 x 9 x 8	10.38 x 6.5 x 6.5 (8145-01-016-3453)	Max Length-8.38 Max Width -4.5 Depth Min -1.69 Max -3.75	0.5-10.5	15
		12.5 x 7.25 x 8 (8145-01-016-3454)	Max Length-10.5 Max Width -5.25 Depth Min -3.25 Max -5.25		
		14 x 10.38 x 9.75 (8145-01-016-3455)	Max Length-12 Max Width -8.38 Depth Min -5 Max -7		
35 x 27 x 30 (8145-01-016-3452)	17.5 x 12.25 x 13	18 x 12.25 x 11.75 (8145-01-016-3456)	Max Length-16 Max Length-10.25 Depth Min -6.9 Max -9	8-40	15
		19 x 14 x 14.25 (8145-01-016-3445)	Max Length-17 Max Width -12 Depth Min -9.5 Max -11.5		

* Includes wrap and cushioning as required to protect the barrier bag when applicable.

Source: https://assist.dla.mil -- Downloaded: 2016-10-21T11:02Z
Check the source to verify that this is the current version before use.

APPENDIX F

PROCEDURAL REQUIREMENTS

10. Scope. When specified, this appendix provides procedural requirements for the preservation and packing of DOD materiel. In case of conflict between documents, the following shall be the order of precedence: (a) contract, (b) detailed requirements, and (c) this standard.

20. Requirements.

20.1 Detailed requirements. DOD materiel shall be packaged for shipment and storage in accordance with the detailed requirements and as specified herein.

20.2 Preservation requirements.

20.2.1 Disassembly. Items may be disassembled into component parts provided an overall saving will result and disassembly and reassembly can be accomplished with the use of common hand tools by semi-skilled personnel.

20.2.2 Cleaning, drying and preservative application(Level A, B, and C).

20.2.2.1 Cleaning. Items shall be cleaned in accordance with the detailed requirements and the applicable requirements specified herein.

20.2.2.1.1 Brake system components. Cleaning shall be in accordance with Process C-1 of MIL-P-116, except petroleum base solvents shall not be used on interior parts of the air, vacuum or, for the Army, hydraulic brake systems.

20.2.2.1.2 Impregnated items. Oil and graphite impregnated items shall be cleaned by wiping with a cloth moistened with solvent conforming to P-D-680 or thinner conforming to TT-T-291. The quantity of solvent applied to the cloth shall be limited to avoid dissolving impregnated lubricants.

20.2.2.1.3 Complex items. Items requiring interior cleaning shall be completely drained of all entrapped cleaning fluid.

20.2.2.1.4 Burned powder removal. All items which have been exposed to burned powder residues shall be cleaned by the use of a dry cleaning solvent conforming to P-D-680, then scrubbed with a nonmetallic bristle brush saturated with cleaning compound conforming to MIL-C-372, followed by a rinse in clean petroleum solvent and allowed to drain.

20.2.2.1.5 Recoil, equilibrator, buffer cylinders, and gun tubes. Unless otherwise specified, painted surfaces shall be cleaned in accordance with Process C-1 and unpainted surfaces in accordance with Process C-3 of MIL-P-116. Interior surfaces shall be cleaned additionally in accordance with Process C-8 of MIL-P-116.

20.2.2.1.6 Nonmetallic items. Unless otherwise specified, items such as rubber, leather and cork shall be cleaned in accordance with Process C-1 of MIL-P-116.

Source: https://assist.dla.mil -- Downloaded: 2016-10-21T11:02Z
Check the source to verify that this is the current version before use.

20.2.2.1.7 Materiel used with liquid oxygen. Items in direct contact with liquid oxygen shall be prepacked in heat sealed bags conforming to MIL-B-117 immediately after cleaning.

20.2.2.1.8 Optical elements and assemblies.

20.2.2.1.8.1 Cleaning material and equipment. The following materials and equipment shall be used in the cleaning of the majority of optics:

Materials and equipment	Specification
Alcohol, ethyl (ethanol)	O-E-760, Grade I
Bottle, glass	----
Brush, camel hair	----
Cloth, cotton, cheesecloth	CCC-C-440
Cloth, cotton, batiste	MIL-C-40129
Cotton, absorbent	JJJ-C-561, Grade A, Class I
Paper, lens tissue	NNN-P-40
Sticks, orange or equal	----
Syringe, rubber	----
Others will require special procedures	---

20.2.2.1.8.2 Cleaning operations. Exposed surfaces of optical elements or assemblies shall be cleaned in the following manner: (1) Loose particles of dust shall be removed from the surface of the optic with a camel hair brush. (2) The surface to be cleaned shall be wiped with a circular motion using cotton, lens paper conforming to NNN-P-40, Type I, or freshly laundered cheesecloth which is saturated with alcohol. CAUTION: Only lens tissue paper conforming to NNN-P-40, Type I or batiste cloth shall be used to clean plastic elements. The surfaces shall be dried by wiping with clean cotton, lens paper conforming to NNN-P-40, Type I or freshly laundered cheesecloth. (3) A swab shall be made by wrapping one piece of lens tissue around the end of an orange stick or equivalent. One or two drops of alcohol shall be added on the tip of the swab. The swabbing operation shall begin at the center of the polished surface. A light downward pressure shall be exerted on the swab and with a circular motion gradually increase the radius of area being cleaned until the entire surface has been swabbed. This operation shall be repeated until no trace of dirt, lint, or smears are perceptible. (4) A rubber syringe shall be used as a bellows to remove any residual dust or lint that may remain on the cleaned surface. (5) Immediately after cleaning, the optics shall be wrapped with lens tissue paper conforming to NNN-P-40, Type II or covered with a plastic cap-plug conforming to MIL-C-5501.

20.2.2.2 Drying. Immediately after cleaning, item shall be thoroughly dried by the specified procedure. When a drying procedure is not specified, the item shall be dried by the most applicable procedure of MIL-P-116. When procedure D-1 or D-4 is used as a cleaning process, drying is not required.

Source: https://assist.dla.mil -- Downloaded: 2016-10-21T11:02Z
Check the source to verify that this is the current version before use.

20.2.2.3 Preservative application. Immediately after cleaning and drying, a continuous coating of the required contact preservative shall be applied to unpainted metal surfaces by one or more of the applications specified in MIL-P-116. Coating requirements shall be in accordance with the applicable preservative specification referenced in the detailed requirements; however occasionally in lieu of the preservative specification referenced in the detailed requirements, the following shall apply to the specific items and for the conditions as stated herein.

20.2.2.3.1 Partially painted or combination metallic/nonmetallic parts. Apply the required preservative only to the unpainted, unplated ferrous metal surfaces unless otherwise specified.

20.2.2.3.2 Nonferrous and plated items. Preservatives shall not be required on exterior parts that are completely nonferrous, gold plated, silver plated, cadmium plated, zinc plated, tin plated or stainless steel of the 18-8 variety. Coatings such as phosphate are not included in this exception. Platings shall not be of the flash variety.

20.2.2.3.3 Sealing item openings. Only metal caps and plugs conforming to MIL-C-5501 shall be used in sealing all threaded ports and orifices of all fluid and gaseous systems and components thereof, i.e., hydraulic, fuel, oil, pneumatic, etc. Specifically excepted from this requirement are oxygen systems and components thereof, and escape system hot gas ballistic lines and devices which shall use rigid plastic caps and plugs conforming to MIL-C-5501 to seal off all threaded ports and orifices. All non-threaded ports and orifices may utilize plastic caps and plugs. Other openings shall be sealed with MIL-B-121, Grade A barrier material and secured with PPP-T-60 tape or sealed with 6 mil L-P-378 polyethylene and secured with vinyl pressure sensitive tape.

20.2.2.3.4 Brake and clutch components. Interior of brake drums, brake disk, calipers, shoes, and related bare ferrous metal parts shall be coated with primer, conforming to MIL-P-46093 or as otherwise specified. Clutch disk and pressure plate shall be coated with the same type primer. Application on nonmetallic parts shall be held to an absolute minimum. The primer coating covered by this specification is intended for application to a dry film thickness between 0.0004 and 0.0006 inch on metal surfaces. The preferred method of applying this primer is by spraying, which will assure the desired film thickness and performance of primer to the specification.

20.2.2.3.5 Hydraulic brake system and components. Wheel cylinders, master cylinders, and related metal components shall be coated with preservative conforming to MIL-B-46176 or preservative compatible with operating fluids or as otherwise specified.

20.2.2.3.6 Operational lubricants and hydraulic oils and fluids. When a preservative is required for an item that operates in a lubricant or hydraulic brake system (see 20.2.2.3.5), the item shall be preserved with the same operational lubricant or oil or preservatives compatible with the operating fluid.

Source: https://assist.dla.mil -- Downloaded: 2016-10-21T11:02Z
Check the source to verify that this is the current version before use.

20.2.2.3.7 Volatile corrosion inhibitor (VCI). When VCI is specified in the detailed requirements, the VCI shall be used and applied in accordance with MIL-I-8574. The size of the barrier applied to the unit quantity shall be computed as specified and applied as the intimate wrap. When the unit quantity of an item occupies one half or less of the minimum size bag (2-1/2 by 3 inches) the VCI barrier size shall be a 4 by 2 inch sheet folded one half its length. The unit quantity shall be placed between the folds with the treated side next to the part and inserted into the specified bag.

20.2.2.3.8 Impregnated items. Unless otherwise specified, oil impregnated metallic items shall be coated with a compatible preservative oil normally conforming to VV-L-800. Preservatives shall not be applied to graphite impregnated items.

20.2.2.3.9 Internally preserved items. Items requiring interior preservative application shall be sloshed, sprayed or dipped, as applicable, with the preservative oil prescribed in the detailed requirements. Preservatives shall be applied in such a manner to insure complete coverage of both interior and exterior surfaces. The preservative shall be thoroughly drained to avoid entrapment of preservative that could subsequently damage the package. In addition, if item cannot be sealed by design features, openings shall be sealed with caps or plugs, conforming to MIL-C-5501, or with tape conforming to Class I of PPP-T-60, Type III or IV. (see 20.2.2.3.3).

20.2.2.3.10 Rubber and synthetic rubber items. When rubber or synthetic rubber items are unit packed in quantities of more than one, the individual pieces shall be dusted with technical talcum (soapstone), conforming to commercial standard, in powder form, or shall be separated by Kraft or plastic film separators. The talcum for Navy will be asbestos free.

20.2.2.3.11 Items with grease fittings. Unless otherwise specified, items such as universal joints and flexible cables equipped with grease fittings (zerk) or tapped holes for such fittings shall be preserved (pressure filled) with grease specified for normal operations.

20.2.2.3.12 Supplemental oil reapplication. When the engineered drawing or other technical instruction requires a supplementary oil finish to metals with phosphate and black oxide coatings, the same supplementary oil shall be reapplied after cleaning unless otherwise specified in detailed requirements.

20.2.3 Packaging materials. The use of new or commercially available packaging materials or products is encouraged and recommended provided they are equal or better than similar approved materials or products without increasing the overall cost to the government. To expedite the use of these materials prior to their inclusion in government specifications, their prompt use will be permitted under conditions outlined herein. In instances where the material or product is not covered by a specific specification or standard, the manufacturer or fabricator of the material or product shall make available documented evidence by an approved testing laboratory, that the material or product meets or exceeds all requirements of the performance specification for a similar material or product. The request for approval

Source: https://assist.dla.mil -- Downloaded: 2016-10-21T11:02Z
Check the source to verify that this is the current version before use.

shall be submitted to the acquiring activity via the technical packaging element of the contract administration activity. If, after a review of the material or product and related certified compliance report or the witnessing of the stipulated tests, it is the opinion of the approving authority that the material or product meets or exceeds the criteria established for similar materials or products, interim authorization for use may be granted pending preparation of a new specification or revision to existing specifications.

20.2.4 Item preparation (flexible-coilable). Flexible, coilable items constructed in a loop, such as fan belts or door seals, and having a 14 inch diameter or greater, shall be looped to an odd number of loops so as not to distort or otherwise damage the item. Items shall not be looped if undue strain or damage will occur. Items that are practical to roll or fold shall be rolled or folded to the minimum cube that will prevent deformation or set to the item during long term storage.

20.2.5 Wheeled items. Rubber tired wheels, pneumatic or solid, shall be blocked clear of the floor of the crate or the skid and shall not be load bearing. When specified, wheeled items shall be shipped uncrated as mobile packs.

20.2.6 Caging or damping. Items such as instruments, gyroscopes, etc., which incorporate caging or damping features for securing movable parts in place, shall be properly engaged or electrically dampened prior to packaging.

20.2.7 External aircraft drop tank containers. Containers for external aircraft drop tanks are to be slotted angle steel or reinforced fiberglass containers; wood and plastic type containers are not acceptable, unless authorized by the agency having responsibility for the respective drop tanks.

20.2.8 Packaging gaskets or seals. When gaskets or seals are used in connection with the preservation procedure and could be mistakenly used in the installation of the item, they must be identified in a manner that will prevent their accidental use in the installation of the assembly.

20.2.9 Equipment mounts. Equipment with vibration-shock mounts shall not be shipped on the mounts unless they are immobilized by blocking or unless the mounts are an integral internal part of the equipment. In either event, a suitable cushioning system shall be provided.

20.2.10 Electronic devices susceptible to damage by environmental field forces. Sensitive electronic devices (including modules, circuit card assemblies and printed wiring boards containing one or more of these sensitive components) shall be packaged in accordance with the applicable submethod of Method IA (for Level A or B) or Method IC (for Level C) of MIL-P-116. When required to protect the device or barrier, only non-corrosive electrostatic-protective wrapping or cushioning shall be used. Wrapping material shall conform to type II of MIL-B-81705. Cushioning material shall conform to PPP-C-1842, type III, PPP-C-1797, type II or MIL-P-81997, type II. Each device, wrapped or cushioned as required, shall be inserted in heat sealed bags or envelopes conforming to MIL-B-117, type I, class F, style 1

Source: https://assist.dla.mil -- Downloaded: 2016-10-21T11:02Z
Check the source to verify that this is the current version before use.

(for electromagnetic, electrostatic, and watervaporproof protection) or in heat sealed bags conforming to MIL-B-117, type I, class A, style 2 or MIL-P-81997 (when only electrostatic and waterproof protection is necessary). Larger bags shall be fabricated from MIL-B-81705, type I material for electromagnetic, electrostatic, and watervaporproof protection and from MIL-B-81705, type II material for electrostatic and waterproof protection. The sensitive electronic device symbol and associated caution label shall be employed as specified in MIL-STD-129 on all unit, intermediate and exterior containers enclosing these devices. To assure protection in handling, sensitive electronic devices shall be opened only at field force protective work stations. The requirements of this paragraph apply to all levels of protection.

20.2.11 Radioactive materials. In addition to the preservation and packing specified herein, the packing, marking, labeling and shielding requirements of Title 49 CFR, Section 173.389 through 173.398, as applicable, shall be complied with. Marking and labeling shall be in accordance with MIL-STD-129.

20.2.11.1 Quantity of radioactive materials. When the quantity of radioactive materials to be shipped exceeds the amount normally authorized by Title 49 CFR or when the containers differ from those which are prescribed, the exemption must be obtained from the Department of Transportation, Office of Hazardous Materials prior to shipment. Details of the container shall comply with the following paragraphs.

20.2.11.2 Shielding material. Lead shield or other shielding material of equal efficiency, shall be encased in steel or other suitable material so that shielding will not flow away or loose its efficiency if involved in a fire. Steel or other suitable material shall be at least 1/8 inch thick for 6 inches or less of lead or other shielding and 1/4 inch thick for more than 6 inches of lead or other shielding. Casing thickness shall be determined by the thickness of shielding measured from cavity wall to nearest point of outside container.

20.2.11.3 Shield support. Shield shall be supported in outer container so that it cannot change position or open under any ordinary conditions.

20.2.11.4 Shield design. Parts of shield shall be so designed that radiation cannot be "beamed" at point where container sections join (that is, offset design is required).

20.2.11.5 Package radiation. Radiation at any surface of package shall be within the limits set by Title 49 CFR.

20.2.11.6 Container design. Container shall be designed so that it can be properly braced in freight car or trucks.

20.2.11.7 Containers exceeding 200 pounds in weight. Containers weighing more than 200 pounds shall be fitted with skids or otherwise designed so as not to create excessive pressure on small areas of the car or truck floor.

Source: https://assist.dla.mil -- Downloaded: 2016-10-21T11:02Z
Check the source to verify that this is the current version before use.

20.2.11.8 Container approval. Approval of shipping containers for materials where criticality must be considered will be on the basis of design and product data furnished.

20.2.11.9 Metal container. When metal containers are used, joints of the metal outer container, when practicable, shall be 100 percent welded or brazed, and closure shall be secured by positive fastening device capable of withstanding severe impacts without failure. Shielding material, if any, in closure part shall be completely encased in metal with joints 100 percent welded or brazed.

20.2.11.10 Container seal. Means shall be provided for applying a seal so that outer container cannot be opened without destroying the seal.

20.2.11.11 Container handling devices. Heavy containers shall be provided with hooks, handles and skids, or any other device necessary to facilitate normal handling.

20.2.12 Repairable assemblies. Unless otherwise specified, spare repairable assemblies or components as a unit shall be packaged individually in reusable containers. Tamperproof seals shall be provided unless otherwise specified. Repairable assemblies up to 100 pounds which have submarine application shall be packaged in accordance witb MS90363.

20.3 Unit pack requirements.

20.3.1 Level A.

20.3.1.1 Intimate wrap. When a multiple quantity is specified to be wrapped in a unit pack, individual items weighing more than 1/4 pound, or fragile items, shall be individually wrapped. When the individual item weighs 1/4 pound or less, and is not considered to be fragile, the entire specified multiple quantity shall be included in only one wrap. Arrangement of multiple quantities within the wrap shall be in such a manner as to provide minimum cube.

20.3.1.1.1 Intimate wrap size. When size is not specified, length and width shall be determined in accordance with Table V, Appendix C except that the minimum size shall be 3 by 3 inches.

20.3.1.1.2 Intimate neutral wraps. When greaseproofness (no contact preservative) is not a requirement and barrier material conforming to MIL-B-121, Type II, Grade A, Class 2 is specified in the contract or packaging document as an intimate wrap, neutral papers conforming to MIL-P-17667, MIL-P-130 and Type II of UU-P-553 may be used as a substitute.

20.3.1.2 Cushioning, blocking, and bracing. When cushioning, blocking, and bracing is required but not specified, application shall be in accordance with MIL-P-116. When cushioning wrap is required and size is not specified, size shall be computed as specified in Table V of Appendix C for intimate wrap.

Source: https://assist.dla.mil -- Downloaded: 2016-10-21T11:02Z
Check the source to verify that this is the current version before use.

20.3.1.3 Stiffeners. When stiffeners are required, the unit quantity of the item shall be sandwiched between two pieces, inserted within one folded piece, or taped or tied to a single piece of material a minimum of 1/2 inch larger in length and width than the item or quantity. Stiffener material shall conform to UU-C-282 or PPP-F-320. After positioning the item between the stiffeners, the stiffeners shall be secured with tape conforming to PPP-T-42, PPP-T-45, PPP-T-76, or PPP-T-60. The tape shall not touch the item. Stiffeners shall not be secured in a manner that will exert pressure on items subject to set and distortion. Multiple unit quantities requiring a stiffener shall be placed adjacent to one another or placed on top of each other in order to minimize cubic displacament. Items subject to deformation, such as preformed material or synthetic rubber seals and gaskets, may use mailing tube cores, or vacuum formed or otherwise built-up devices to prevent deformation or set.

20.3.1.3.1 Load deflector stiffeners. When an item needs protection from being compressed or otherwise deformed, such as "O" rings and a specific type of stiffener is not specified, such items shall be protected by load deflector stiffeners. However, "O" rings with an outside diameter of two inches or less, will not require stiffeners. Coiling is permissible, except for "O" rings and gaskets, provided coiling will not deform the item.

20.3.1.4 Desiccant application. Unless otherwise stated, desiccant shall be applied in accordance with Table V, Appendix C.

20.3.1.5. Unit Containers. Unit pack container shall be as specified by the detailed requirements or as specified in Table I of this appendix. When the unit container is also the exterior container, Table VII of this appendix C applies.

20.3.1.5.1 Container size. When size is not specified, calculate by utilizing formulas of Table V of Appendix C.

20.3.1.5.2 Conforming heat sealed bags. When unit packed items use heat sealable bags as the exterior unit container, the bags shall conform to the configuration of the parts, or container, as applicable. An exception to this requirement is when stiffeners are used in conjunction with bags, and the item has been coiled prior to the application of stiffeners.

20.3.2 Level B.

20.3.2.1 Requirements. When detailed requirements are not specified in packaging documentation for Level B, preservation shall be in accordance with 20.3.2.2 through 20.3.2.8.

20.3.2.2 Bare ferrous items (not painted or plated). Items shall be provided with a single wrap of VCI treated barrier, conforming to Type I, Class 2, Style B of MIL-P-3420. Barrier shall be placed around the entire quantity contained in the unit pack.

20.3.2.3 Ferrous and nonferrous combinations. All items of composite construction, including those which are partially plated or painted, shall be

Source: https://assist.dla.mil Downloaded: 2016-10-21T11:02Z
Check the source to verify that this is the current version before use.

coated with lubricating oil, conforming to VV-L-800 on the bare ferrous surfaces only. When a preservative is applied, the unit quantity shall be wrapped in barrier material conforming to Type II, Grade A, Class 2 of MIL-B-121.

20.3.2.4 Completely plated, painted and nonferrous items. All completely plated, painted and nonferrous items including stainless steel, shall be packed without application of a preservative.

20.3.2.5 Items requiring protection from direct contact with water. When the nature of an item to be packaged is such that a contact preservative is not applicable, the quantity of items to be contained in the unit pack shall be wrapped in material conforming to PPP-B-1055, or MIL-B-121. Wrap shall be arranged on or around the items in a manner that will prevent free water (rain and melting snow) from entering directly into the interior of the pack.

20.3.2.6 Cushioning. Items shall be cushioned within the pack to prevent damage which would result from movement of the items within the package.

20.3.2.7 Unit containers. Unit containers shall be as specified by the detailed requirements as specified in Table I of this appendix or Table VII of Appendix C if the unit container serves at the exterior container.

20.4 Intermediate pack requirements.

20.4.1 Level A and B.

20.4.1.1 Intermediate container. The intermediate container shall be as specified in the detailed requirement or as specified in Table I of this appendix. Intermediate containers shall be used under the following conditions:

a. When they are considered economical because of total quantity on order, production schedule or when they facilitate handling, storage and reshipment.

b. When the quantity to be shipped to a single destination permits the use of two or more intermediate containers in an exterior container.

c. When the exterior surface of the unit pack is a bag or wrap of any kind.

d. When the unit pack volume is less than 64 cubic inches and the exterior container is a rigid type.

20.4.1.2 Quantities in intermediate containers. Except as otherwise specified herein or specified by the contract, unit packs requiring intermediate packing shall be packed in quantities governed by the following:

a. Maximum of 100 unit packs to the intermediate container

Source: https://assist.dla.mil -- Downloaded: 2016-10-21T11:02Z
Check the source to verify that this is the current version before use.

b. Maximum net load of 40 pounds

c. Maximum size of 1.5 cubic feet with at least two dimensions not exceeding 16 inches.

Table II indicates the quantities of unit packs that shall be placed in the intermediate container based on the above criteria.

20.4.1.3 Intermediate container limitations. Quantities of unit packs prescribed may be varied under the following conditions:

a. When the quantity to be shipped to a single destination is less than the established intermediate quantity, the total quantity shall be placed in a shipping container of a minimum size to contain the pack.

b. When a contract or order specifies a total quantity that is more than the established intermediate quantity, but not in multiples thereof, established quantities shall be packed in the required number of intermediate containers, and the remaining quantity shall be placed in the smallest container which will accommodate the unit pack.

c. When the contract or order specifies a quantity that is more than twice the established maximum permissible intermediate quantity, the container size shall be selected as applicable from the sizes specified in MIL-STD-1187. The size selected shall be such that voids are held to an absolute minimum.

20.4.1.4 Closure. Container closure shall be in accordance with the applicable container specification.

20.5 Exterior packing requirements.

20.5.1 General considerations. The exterior container being shipped to a single destination shall as far as practicable:

a. contain items of the same National Stock Number

b. contain identical quantities of unit/intermediate packs

c. contain items of the same contract

d. contain items having the same cure, manufacture or expiration date

e. have a minimum size of three cubic feet with the following exceptions:

(1) When the maximum gross weight precludes the use of the minimum size box, the size shall be governed by the quantity of the item which most nearly approximates the maximum gross weight.

Source: https://assist.dla.mil -- Downloaded: 2016-10-21T11:02Z
Check the source to verify that this is the current version before use.

(2) When the total quantity to be shipped to a single destination displaces less than 3 cubic feet, the exterior container will be the size necessary for the shipment.

(3) If more than one contract line item is involved, those items whose cube is less than 3 cubic feet and whose weight is less than 200 pounds will be consolidated to the fullest extent practicable. (See 20.5.7.)

20.5.2 Skidded containers. All shipping containers, except drums and fiberboard, with gross weights of more than 200 pounds and containers with length and width dimensions of 48 by 24 inches or more and weighing more than 100 pounds will be provided with skids, minimum size nominal 3 X 4 inch lumber laid flat, or in accordance with the applicable container specification, to facilitate ease of handling. Pallets shall be employed for fiberboard containers of the above weights and dimensions for shipment or storage.

20.5.3 Shipping container. Exterior shipping containers shall be of a minimum size to contain the packs. Unless otherwise specified, exterior containers shall be in accordance with the applicable specification selected from Table VII of Appendix C. Container sizes should conform to the maximum extent possible to those listed in MIL-STD-1187.

20.5.4 Container closure. Closure of the exterior container shall be in accordance with the applicable container specification or as specified.

20.5.5 Reinforcement strapping of exterior containers. Reinforcement strapping of containers shall be in accordance with the applicable container specification, except that metal strappings for wood boxes shall conform to QQ-S-781, Type I, Finish A and fiberboard box reinforcing shall be PPP-T-97 or PPP-S-760. Strapping is not required for the following:

a. Conus shipments (does not include oversea shipments through ocean or air terminals).

b. Shipments through a consolidation depot or from one consignor to one consignee in MILVANS or SEAVANS.

c. Containers comprising a palletized load.

20.5.6 Parcel Post shipment. Parcel Post shipments shall meet all requirements specified in postal service requirements.

20.5.7 Consolidated pack. Consolidated packs shall be exterior containers used to consolidate shipments of two or more assorted packed items to a single destination when the total quantity of each item displaces less than three cubic feet. A cover shall be fastened to the container to prevent pilferage or loss of the enclosed packages. The total quantity of the same line items (unit and intermediate packs) shall be positioned during packing to permit ready identification upon opening or shall be consolidated by means such as bagging, tying, bundling, wrapping and cartonizing and then identified before

Source: https://assist.dla.mil -- Downloaded: 2016-10-21T11:02Z
Check the source to verify that this is the current version before use.

being placed in a consolidation container. Consolidated packs weighing over 200 pounds or larger than 20 cubic feet shall be provided with skids to facilitate handling. Consolidated pack containers shall conform to the requirements of the applicable container specification. Containers specified in Table VII of Appendix C shall be utilized. Consolidation containers normally will not exceed 36 inches in depth. Long life reuseable containers are not included in the consolidated packs.

20.5.8 Unitization-consolidation.

20.5.8.1 Palletization. Palletization shall be used to the greatest extent possible where volume of homogeneous commodities are destined for CONUS or overseas shipment. Unless otherwise specified, materiel shall be palletized when containers do not require skids; when quantities per destination exceed either a total of 250 pounds (excluding pallet) or a volume of 20 cubic feet; and when the container size permits use of one of the pallet patterns of MIL-STD-147. Load shall be Type I. The pallet shall conform to NN-P-71, Type IV, Group I or II woods. The load shall be "bonded" to the pallet by strapping conforming to QQ-S-781, Type I, Finish A, or shrink film conforming to L-P-378, Type IV, or stretch wrap. Ammunition unitization shall be in accordance with MIL-STD-1660 and specific service directives and drawings.

20.5.8.2 Criteria for unitization and consolidation. The following factors shall be used in determining the feasibility and requirements for unitization and consolidation:

20.5.8.2.1 Palletized loads. Palletization of exterior containers is confined to the following:

a. Load to consist of four or more unskidded containers being shipped to the same destination or distribution point.

b. The load shall utilize a minimum of 80 per cent of the pallet base.

c. The loaded pallet height shall be in accordance with MIL-STD-147.

20.5.8.2.2 Commercial expendable pallet. Commercial expendable pallets may be used when specified by the acquiring activity (see 6.1).

20.5.9 Stackability and superimposed loads. Shipping containers for all levels shall be capable of stacking and supporting superimposed loads during shipment and storage without damaging the container(s) or its contents when tested in accordance with Methods 5016 and 5017 of FED-STD-101.

20.6 Level C. Unless otherwise specified, items shall be unit packed to prevent deterioration and damage during shipment from the supply source to the receiving activity. Unless otherwise specified, when Level C is specified in the contract, preservation and packing requirements shall be detailed and as a minimum meet referenced, applicable Public Laws (Code of Federal Regulations) or a specific Federal or Military Specification, Standard or Instruction.

Source: https://assist.dla.mil -- Downloaded: 2016-10-21T11:02Z
Check the source to verify that this is the current version before use.

APPENDIX F

20.7 Preparation of general cargo for air shipment. Materiel shipped by air should be packaged so that the cube and gross weight are minimal. The decision to repack should balance transportation cost savings against the cost of repackaging and possible delay of shipment. For transportability constraints when loading and stowing shipments aboard a military aircraft, refer to MIL-A-8421.

20.8 Hazardous material shipments.

20.8.1 By military air (including Logair and Quicktrans). Shipment of hazardous materials by military air or delivered to an airport for shipment by military air shall be prepared for shipment in accordance with the provisions of AFR 71-4/DLAM4145.3/TM38-250/NAVSUP PUB 505/ MCO P4030.19, titled, "Preparation of Hazardous Material for Military Air Shipment".

20.8.2 Other than by military air . Hazardous material shipments by a mode of transportation other than military air shall be prepared in accordance with provisions of Title 49 CFR parts 100-178. Shipments by Parcel Post must comply with Postal Regulations.

20.9 Workmanship. Workmanship shall be such that it will provide adequate protection against deterioration and physical damage to the item being preserved and packed under this standard.

20.10 Marking.

20.10.1 General. Unless otherwise specified, marking for Level A, B and C shall be in accordance with MIL-STD-129. Unless otherwise specified, marking for industrial packs shall be in accordance with ASTM D 3951.

20.10.2 Shelf life codes. Unless otherwise specified, shelf life codes shall be marked on unit, intermediate and exterior containers in accordance with MIL-STD-129, as applicable.

20.11 Packaging design validation tests. Unless the conditions listed in 5.5 exist, the contractor shall submit one prototype pack of the item being procured. The pack shall be made utilizing the same materials, equipment and methods of preservation and packing proposed for use in subsequent production packaging. Packaging design validation tests shall be performed by the contractor and shall consist of the tests specified in Appendix B, 20. The Government representative shall be given at least five days notice of the time and place of prototype pack testing. Examination and tests shall be subject to surveillance inspection by the Government. Validation test results shall be made available for review and approval by the Government inspector prior to the start of production packaging. The approved prototype pack and the test report shall be used as the production standard. Failure of the prototype pack to pass the tests of Appendix B, 20 shall be cause for rejection. Evidence shall be provided by the contractor that corrective actions have been taken to eliminate the condition which caused rejection prior to re-testing. These design validation tests shall be repeated when changes in preservation and packaging materials or processes or designs are made.

Source: https://assist.dla.mil -- Downloaded: 2016-10-21T11:02Z
Check the source to verify that this is the current version before use.

APPENDIX F

TABLE I. Selection and closure of unit and intermediate containers.

Specification/title	Level	Use or closure
PPP-B-26, Bag, Plastic, (General Purpose)	A, B, C	See note 4.
PPP-B-566, Box, Folding, Paperboard		
Variety 2, Process II	A, B, C	See notes 2 and 3.
Variety 1, Process I or II	B, C	See notes 2 and 3.
Variety 2, Process I	B, C	See notes 2 and 3.
PPP-B-636, Box, Shipping, Fiberboard		
(Class Weather Resistant)	A,B,C	See note 3.
(Class Domestic)	B,C	See note 3.
PPP-B-665, Box, Paperboard, Metal Edged and Components	B,C	See notes 2 and 3.
PPP-B-676, Box, Set-up	B, C	See notes 2 and 3.
PPP-S-30, Sack, Shipping, Paper (Cushioned)	A, B, C	See note 4.
MIL-B-117, Bag, Sleeve and Tubing-Interior Packaging	A, B, C	See notes 1 and 4.
MIL-C-3955, Cans, Composite, Spiral Wound	A, B, C	See note 3.

Note 1. For MIL-B-117 bags, net weight of contents will not exceed 10 pounds except that there are no weight restrictions for the following bags; Type I, Class B, Style 2; Type I, Class C, Style 2; Type I, Class E, Styles 1,2 and 3.

Note 2. Use only when weight of contents is as prescribed in applicable container specification.

Note 3. Closure will be accomplished as specified in the applicable specification.

Note 4. Closure may be by any adequate means, except when specified.

Source: https://assist.dla.mil -- Downloaded: 2016-10-21T11:02Z
Check the source to verify that this is the current version before use.

APPENDIX F

TABLE II. Guidance for establishing number of unit packs per intermediate container.

Unit pack per int.container	Unit pack weight	Unit pack cube
100	.4	.0150
96	.41	.0156
92	.43	.0163
88	.46	.0170
84	.47	.0178
80	.5	.0187
76	.52	.0197
72	.55	.0208
68	.59	.0220
64	.62	.0234
60	.66	.0250
56	.71	.0267
52	.77	.0288
48	.83	.0312
44	.91	.0340
40	1.0	.0375
36	1.11	.0416
32	1.25	.0478
28	1.43	.0535
24	1.66	.0625
20	2.0	.0750
16	2.5	.0937
12	3.33	.125
8	5.	.187
4	10.	.375

NOTE: Table II will function as follows:

a. If the unit pack weight is .60 pounds and the unit cube in feet is .0175, 64 units would be placed in the intermediate container.

b. If the unit pack weight is .49 pounds and the unit pack cube in feet is .0265, 56 unit packs would be placed in the intermediate container.

c. In every instance the lesser quantity of unit packs would be placed in the intermediate container.

Source: https://assist.dla.mil -- Downloaded: 2016-10-21T11:02Z
Check the source to verify that this is the current version before use.

APPENDIX G

FACTORS AND FORMULAE ESTABLISHING QUP

10. Scope. This appendix provides the methods to determine the quantity per unit pack (QUP) for other than hazardous materials, when same is not specified in an applicable commodities specification. QUP for hazardous material shall be determined after consideration of the users needs and the restrictions of Title 49 CFR.

20. Determination of QUP.

20.1 Repairable items (depot or field level) or items designated Hi-value or Hi-priority. A QUP of one will be established for all items identified as repairable (depot or field level) or items designated Hi-value or Hi-priority.

20.2 Consumable items.

(a) QUP shall be one for all consumable items with a unit cost of $50.00 or more.

(b) Items of less than $50.00 unit cost may be assigned a QUP of greater than one (1) when the computation utilizing Formula A or B so indicates. However, the maximum dollar value of the QUP shall not exceed $200.00 for parts applicable to more than one assembly or $100.00 for parts applicable to only one assembly.

20.3 Irregular configuration, delicate or fragile item. The QUP for items of irregular configuration, delicate or fragile nature, not lending themselves to multiple packs, is one each.

20.4 Pairs, sets, etc. items. The QUP for items which are furnished in pairs, sets, etc., is one pair, one set, etc., as applicable.

20.5 Items unit packed in accordance with Method II. The QUP for items which are unit packed in accordance with Method II of MIL-P-116 shall be one.

20.6 Expendable items not peculiar to overhaul, costing less than $20.00. A QUP for expendable items not peculiar to overhaul, with a cost of less than $20.00 will be established in accordance with Formula A. (These items are items of supply which are consumed in use or are subject to reconditioning only as provided by the user. No spare parts are available to repair these items. For requirements purposes, these items are considered to have no repair potential. When these items become unserviceable and are beyond reconditioning, they are disposed of as condemned material.)

Source: https://assist.dla.mil -- Downloaded: 2016-10-21T11:02Z
Check the source to verify that this is the current version before use.

20.7 Kit. A kit will be indicated one each, regardless of the quantity of items contained therein.

20.8 Lumber, raw stock, paints, oils, dope etc. The factors and formulas contained herein are not applicable to lumber, raw stock, paints, oils, dope, etc. QUP in these instances will be outlined in the contract.

20.9 Factors and formulae establishing QUP. The following factors and formulae should be used by contractors and item managers for determining the quantity per unit pack (QUP).

20.9.1 Formula A:

(a) Determine item unit cost. Assign cost factor rate shown in the table and follow column down selecting appropriate rate from group of factors (Groups I through IV).

(b) The final rating score is the total computation of the rates from Groups I through IV.

(c) Determine whether item is applicable to more than one end assembly or applicable to only one end assembly. The correct QUP will be the number in the appropriate column in the summary of factors horizontal to the final rating score referenced in (b) above.

(d) For consumer items, office supplies, clothing, commercial hardware, and similar items, a third "quantity" column may be added in the summary to effect uniformity and compatibility with standard industrial packaging. This additional column will not necessitate changing any factors in any of the tables, including the final rating score.

(e) Delicate or fragile peculiar parts costing $2.50 or less, with a final rating score of five or more and similar common parts with a final rating score of four or more will be afforded the next lesser QUP rather than that normally specified in the summary.

(f) In determining QUP for those items or classes for which actual use factors and replacement factors are not available, estimated factors will be used, and the appropriate numerical rate assigned.

20.9.2 Formula B:

(a) Determine quantity required per end assembly. Assign factor rate shown in the table and follow column down selecting appropriate rate from each group of factors (Groups I through IV).

(b) The final rating score is the total computation of the rates from Groups I through IV.

Source: https://assist.dla.mil -- Downloaded: 2016-10-21T11:02Z
Check the source to verify that this is the current version before use.

(c) Determine whether item is applicable to more than one end assembly or applicable to only one end assembly. The correct QUP will be the number in the appropriate column in the summary of factors horizontal to the final rating score referenced in (b) above.

(d) In determining QUP for those items or classes for which actual use factors and replacement factors are not available, estimated factors will be used, and the appropriate numerical rate assigned.

30. Quantity per unit pack determination formula.

30.1 Formula A - (For consumer maintanance type items only)* (Includes items having both maintenance & overhaul application.)

	Cost per item in dollars					
	.01 to .50	.51 to 4.00	4.01 to 10.00	10.01 to 20.00	20.01 to 35.00	35.01 to 50.00
GROUP I - Cost factor rates	4	3	2	1	0	-2
Group II - Weight & cube factor rates						
0 to 0.01 cu ft. and 0 to 0.19 lb.	2	2	2	2	2	2
0.02 to 1.00 cu ft. and 0.20 to 1.00 lb.	1	1	1	1	1	1
1.01 to 2.00 cu ft. and 1.01 to 2.00 lb.	0	0	0	0	0	0
2.01 to 3.00 cu ft. and 2.01 to 5.00 lb.	-1	-1	-1	-1	1	-1
Items exceeding 3.00 cu ft. & 5.00 lb. will be packaged in QUP of one each or one set.						
GROUP III - Replacement factor rates**						
1% thru 20%	-2	-2	-2	-2	-2	-2
21% thru 50%	-1	-1	-1	-1	-1	-1
51% or more	0	0	0	0	0	0
GROUP IV - Method of preservation factor rates						
Methods I and III	0	0	0	0	0	0
Methods IA and IC	-2	-2	-2	-2	-2	-2

Source: https://assist.dla.mil -- Downloaded: 2016-10-21T11:02Z
Check the source to verify that this is the current version before use.

APPENDIX G

Summary of Factors (Formula A)	Parts applicable to more than one assembly***	Parts applicable to only one assembly
0 or less	1	1
1	5	1
2	10	5
3	10	5
4	25****	10
5	50****	25
6	50****	50

* 20.9.1 (d)
** 20.9.1 (f)
*** 20.9.1 (c)
**** 20.9.1 (e)

30.2 Formula B - (for Code 3, overhaul items).

Quantity required for end assembly

	8 or Over	5 to 7	3 to 4	1 to 2
GROUP I - Quantity required per assembly factor rate	6	5	4	2
GROUP II - Weight & cube factor rates				
0 to 0.01 cu ft. & 0 to .19 lb.	2	2	2	2
0.02 to 1.00 cu ft. & 0.20 to 1.00 lb.	1	1	1	1
1.01 to 2.00 cu ft. & 1.01 to 2.00 lb.	-5	-4	-4	-2
2.01 to 3.00 cu ft. & 2.01 to 5.00 lb.	-6	-5	-5	-3
Items exceeding 3.00 cu ft. & 5.00 lb. will be packed in QUP of one each or one set.				
GROUP III - Replacement factor rate				
1% thru 5 %	-4	-4	-4	-4
6% thru 20%	-3	-3	-3	-3
21% thru 40%	-2	-2	-2	-2
41% thru 75%	0	0	0	0
76% thru 100%	+1	+1	+1	+1
GROUP IV - Method of preservation factor rate				
Methods I and III	0	0	0	0
Methods IA and IC	-2	-2	-2	-2

Source: https://assist.dla.mil -- Downloaded: 2016-10-21T11:02Z
Check the source to verify that this is the current version before use.

APPENDIX G

Summary of factors (Formula B)	Parts applicable to more than one assembly	Parts applicable to only one assembly
0 or less	1	1
1	5	1
2	10	5
3	10	5
4	25	10
5	50	25
6	50	50
7	100	50
8	200	100*
9	500	

*Use QUP of 100 each only in instances where more than 100 each of an item is required per end assembly.

Source: https://assist.dla.mil -- Downloaded: 2016-10-21T11:02Z
Check the source to verify that this is the current version before use.

APPENDIX H

RECOMMENDED FIBERBOARD CONTAINER SIZE LIST

10. Scope. This appendix lists the most frequently used fiberboard container sizes in the packaging of parts delivered to the government.

TABLE I. Recommended fiberboard container size list.

Container Size inches (ID)	Available National Stock No.
4x4x4	
4x4x12	8115-00-418-4660
4x4x16	8115-00-200-6954
5x5x20	8115-01-030-3532
6x4x8	8115-00-190-4888
6x6x6	8115-00-183-9503
6x6x10	8115-00-417-9440
6x6x15	
6x6x18	8115-00-190-4920
6x6x24	8115-00-190-4921
8x4x4	8115-00-183-9500
8x8x4	8115-00-281-3878
8x8x8	8115-00-183-9498
8x8x10	8115-00-183-9499
8x8x12	8115-00-281-3882
8x8x14	
8x8x16	8115-00-190-4936
8x8x24	8115-00-417-9442
9x6x6	8115-00-190-4950
9x6x18	8115-01-029-6777
9x9x9	8115-00-418-4658
10x6x4	8115-00-183-9496
10x6x10	8115-00-255-1341
10x8x6	8115-00-183-9497
10x10x8	8115-00-183-9494
10x10x10	8115-00-190-4959
10x10x12	8115-01-034-0370
11x11x11	8115-00-417-9406
11-1/4x8-3/4x4	8115-00-515-2043
11-1/4x8-3/4x18	8115-00-190-4969
12x6x6	8115-00-183-9492
12x6x12	8115-00-190-4974
12x6x15	8115-00-417-9380
12x9x6	8115-00-417-9379
12x9-1/2x9-1/2	8115-00-132-9531
12x12x4	8115-00-190-4860
12x12x8	8115-00-417-9378
12x12x10	8115-00-183-9490
12x12x12	8115-00-183-9491

Source: https://assist.dla.mil -- Downloaded: 2016-10-21T11:02Z
Check the source to verify that this is the current version before use.

APPENDIX H

TABLE I. Recommended fiberboard container size list (continued)

Container Size inches (ID)	Available National Stock No.
12x12x14	8115-00-409-3807
13x13x13	
14x10x6	8115-00-495-5458
14x10x10	8115-01-030-3537
14x12x8	8115-00-183-9488
14x14x12	8115-00-183-9489
14x14x14	8115-00-417-9321
14x14x16	8115-00-585-4906
14x14x18	8115-00-417-9320
15x15x10	8115-00-417-9318
16x10x10	8115-01-030-4249
16x12x8	8115-00-183-9487
16x12x12	8115-00-418-4653
16x16x12	8115-00-451-7853
16x16x16	8115-00-190-5002
18x12x12	8115-00-514-2409
18x15x10	8115-00-190-5007
18x15x15	8115-00-417-9292
18x18x12	8115-00-183-9482
18x18x18	8115-00-428-4185
20x10x10	
20x12x12	8115-01-008-3645
20x16x16	8115-00-275-5777
20x20x6	8115-00-417-4253
20x20x12	8115-00-428-4183
20x20x20	8115-00-428-4158
22X22X12	8115-00-428-4145
24x12x12	
24x14x14	8115-00-071-2972
24x16x12	8115-00-183-9481
24x16x16	8115-00-292-0123
24x18x18	
24x20x16	8115-00-417-9236
24x24x10	8115-00-428-4124
24x24x12	8115-00-174-2354
24x24x16	
24x24x20	
24x24x24	8115-00-417-9416
26x12x8	
26x12x10	
26x18x18	
26x26x20	
29x14x14	
30x12x6	8115-00-190-5017

Source: https://assist.dla.mil -- Downloaded: 2016-10-21T11:02Z
Check the source to verify that this is the current version before use.

APPENDIX H

TABLE I. Recommended fiberboard container size list (continued)

Container Size inches (ID)	Available National Stock No.
30x12x12	
30x16x16	8115-00-292-0120
30x20x12	
30x20x20	
30x26x20	
32x26x16	
32x26x26	
34x14x10	8115-00-564-8053
34x20x15	
34x20x20	
36x12x12	
36x14x14	8115-00-190-5020
36x24x22	
36x26x18	
40x14x14	

Source: https://assist.dla.mil -- Downloaded: 2016-10-21T11:02Z
Check the source to verify that this is the current version before use.

APPENDIX J

DATA REQUIREMENTS

10. Scope. This appendix lists the Data Item Descriptions (DD Form 1664) and the data requirement per applicable DID.

10.1 Data requirements. The required data and applicable DID are listed as follows:

Applicable Paragraph	Data Requirement	Applicable DID
4.1	Packaging Data	DI-L-7135
4.1	Special Packaging Instruction	DI-L-7136
4.4	Input Data for Container Design Retrieval System	DI-L-2162
4.4	Request Form, Container Design Retrieval Search	DI-L-2163
App. D, 50.3.5	Kit Contents List	DI-L-7137

Source: https://assist.dla.mil -- Downloaded: 2016-10-21T11:02Z
Check the source to verify that this is the current version before use.

APPENDIX K

PACKAGING DATA FORMS

10. Scope. This appendix outlines procedures and provides necessary guidance and instructions which shall be used for the preparation of required packaging data.

20. General requirements.

20.1 Development of data. Data submitted by contractors will be selected in accordance with the requirements of this standard. Each element of the code shall be completed, indicating the type, kind of material, or processes used. These data and codes shall be supplemented as outlined herein.

20.2 Recording data.

20.2.1 Manual recording of data. Figure 1 (DD Form 2326) "Preservation and Packing Data," is the form on which initial entry or revision to previously established and approved elements of packaging data shall be annotated. Data shall be recorded in coded form or in the clear as required, or by reference to specification(s) or special packaging instructions (SPI). Entries shall be recorded to assure clear, legible reproduction of the data. The contractor may, upon approval of the contracting agency, furnish the data on forms he uses for his internal operation provided there is no change in the sequence and format of Figure 1.

20.2.2 Punch Card Accounting Machine (PCAM) recording of data. Data on PCAM formats shall be interpreted in two lines across the top of the card. The first 46 digits shall be interpreted on the top line and digits 47-80 on the second line. The quality of PCAM cards shall be in accordance with G-C-116 or ANSI X3.11. The contractor may furnish, with the approval of the contracting officer, the data on forms he uses for his internal operation provided the sequence and format of Figure 1 is followed.

20.2.3 National Stock Number (NSN) requirements. When preservation and packing data is submitted on DD Form 2326, NSNs shall be provided in Table I (card A) only and shall not be provided on any subsequent cards required. If PCAM cards are furnished, NSNs shall be provided on all cards.

20.2.4 Coded data. Coded data shall be as specified in 30. If additional codes are needed to specify a requirement, requests for inclusion, with substantiating data, shall be initiated in accordance with the directions contained in MIL-STD-2073-2. Until the new requirement is represented by a code symbol in MIL-STD-2073-2, Code Z or ZZ shall be used and details shown as supplemental data.

20.2.5 Kits (Parts and Modification). Packaging requirements for modification and parts kits will always be defined on special packaging instructions (SPIs). Unless otherwise specified, a copy of the "Kit Contents List" prepared in accordance with Appendix D, shall be attached to the SPI.

Source: https://assist.dla.mil -- Downloaded: 2016-10-21T11:02Z
Check the source to verify that this is the current version before use.

20.2.6 Special packaging instructions. Data shall be prepared in accordance with 40.

20.2.7 In-the-clear instructions. An example of in-the-clear instructions that can be provided a contractor is shown in 50.

20.2.8 Subcontractors and vendors. The prime contractor is responsible for assuring that requirements set forth herein are complied with by his subcontractors and vendors when shipments of material are made direct to Government activities.

30. Detailed requirements.

30.1 Submittal of packaging data. Packaging data is divided into the following categories:

Item identification data (Figure 1, Table I)
Preservation and packing data (Figure 1, Table II)
Supplemental data (Figure 1, Table III)
Special packaging instruction data (Figure 1, Table IV)

When data is requested it shall be developed as specified in 30.2.4, 30.2.5, 30.2.6, and 30.2.7. Item identification data shall be developed for all items. No further data need be developed for common group items. Preservation and packing data, supplemental data, and special packaging instruction data shall be developed for selective and special group items as required. Data elements 43-44 of Table I and 29-40 of Table II shall not be developed for special items where SPIs are required.

30.2 Preparation of packaging data. The detailed guidance in Tables I-IV prescribes the procedures for inserting data on Figure 1. Figure 1 is a manual multiple use form designed to reduce the amount of work necessary in compiling data relative to packaging of any given item. The form has provisions for:

Nomenclature
Design activity's code (FSCM) and design activity's part number
Approval stamp (reference 30.3.4)
Configuration item specification reference
Item identification data
Preservation and packing data
Supplemental data
Special packaging instruction data

In the detailed guidance below, column numbers in the Figure 1 format establish the sequence and position in which data shall be assembled on the form.

30.2.1 Nomenclature. Show item name in the designated block on the Figure 1 format.

Source: https://assist.dla.mil - Downloaded: 2016-10-21T11:02Z
Check the source to verify that this is the current version before use.

30.2.2 Design activity code and part number. Show the Federal Supply Code for Manufacturers (FSCM) of the activity preparing DD Form 2326 and the part number of the item, if any.

30.2.3 Configuration item. Show configuration item specification number for the item in the designated block on the Figure 1 format when the contract requires development of a CI specification for the item in accordance with MIL-STD-490.

30.2.4 Item identification data. The elements of data in Table I are applicable to the identification and physical characteristics of the item. Information shall be entered as prescribed in Table I.

TABLE I. Item identification data.

Column Number	Element of Data	Explanation or Instructions
1	Document identifier	Enter "A" to identify as item identification data.
2-6		Reserved for system document control and identification numbers and applicable prefix designations.
7-21	National stock number	Show the identification number assigned to the item of supply (7-10 Federal Supply Classification code; 11-19 National Item Identification Number; 20-21 Materiel Management code or Service Management code as applicable). When NSN (Columns 7-19) is not available, columns 51-79 are mandatory.
22-26	Unpackaged item weight	Show actual net weight of item to the nearest one tenth of a pound up to 9,999.9. Use zeros to fill voids. For items in excess of 9,999.9 pounds, show weight in whole pounds computed as follows: a. Show "A" in column 22 and the whole number in columns 23-26 to represent the number given times (X) 10 (e.g., A9999=99,990). b. Show "B" in column 22 and the whole number in columns 23-26 to represent the number given times (X) 100 (e.g., B9999=999,900).

Source: https://assist.dla.mil -- Downloaded: 2016-10-21T11:02Z
Check the source to verify that this is the current version before use.

APPENDIX K

TABLE I. Item identification data (continued).

Column Number	Element of Data	Explanation or Instructions
		c. Show "C" in column 22 and the whole number in columns 23-26 to represent the number given times (X) 1,000 (e.g., C9999=9,999,000).
27-38	Unpackaged item dimensions	Show unpackaged item dimensions to the nearest .1 inch in order by length, width, and depth. The largest diameter shall be used to indicate width or depth of cylindrical items. Dimensions less than .1 inch show as "0001." Use zeros to fill voids (e.g., 0024, 0001, etc.) NOTE: Coiled material shall be coiled and the overall dimensions used.
39-42	Packaging category	In columns 39-40, show the appropriate 2-digit code for the physical and chemical characteristics of the item using Table I of Appendix C. In Columns 41-42, show the 1-digit codes for weight/fragility and for preservative from Tables II and III of Appendix C.
43-44	Special marking	Select appropriate code from Table X of MIL-STD-2073-2. When more than one code or a combination of codes not included in the table must be specified, show "ZZ" and specify in supplemental data.
45-47	Quantity per unit pack (for non-Army applications)	State quantity per unit pack (QUP) in the clear. For items in excess of 999, use codes contained in MIL-STD-2073-2.
48-50	Intermediate container quantity (for non-Army applications)	When intermediate containers are used, enter the number of unit packs to be included in the intermediate container in the clear up to 100. If there is no requirement for intermediate containers, enter "000".

Source: https://assist.dla.mil -- Downloaded: 2016-10-21T11:02Z
Check the source to verify that this is the current version before use.

TABLE I. Item identification data (continued).

Column Number	Element of Data	Explanation or Instructions
		Additional callout options are contained in MIL-STD-2073-2.
45-50	Quantity per unit/intermediate pack (for Army applications only)	State quantity per unit pack (QUP) in the clear in columns 45-47. State the number of unit packs to be included in the intermediate container in columns 48-50. If QUP exceeds 999, enter "U" in column 45 and the actual unit pack quantity in columns 46-50, right justified, zero filled.
51-55	Federal Supply Code for Manufacturers of the part number	Enter the 5-digit numerical code, corresponding to the manufacturer of the part, assigned in conformance with Cataloging Handbook H4-1. These columns may be left blank if NSN information is entered in columns 7-21.
56-79	Drawing or part number	Enter the drawing or part number of the item being packaged, as applicable. These columns may be left blank if NSN information is entered in columns 7-21.
80	Card indicator	Enter one of the following as appropriate: (a) If only an A card will be used, enter "1." (b) If an A and B card will be used, enter "2." (c) If an A, B, and C card will be used, enter "3." (d) If an A, B and D card will be used, enter "4."

30.2.5 Preservation and packing data. Table II provides the basic elements of data required in preservation and packing. These elements of data are considered as output data for common group items since this data is predetermined. However, this data must be developed for selective and special group items. Information shall be entered as prescribed in Table II.

Source: https://assist.dla.mil -- Downloaded: 2016-10-21T11:02Z
Check the source to verify that this is the current version before use.

APPENDIX K

TABLE II. Preservation - Packing data.

Column Number	Element of Data	Explanation or Instructions
1	Document identifier	Enter "B" to identify as preservation-packing data.
2-6		Reserved for system document control and identification numbers and applicable prefix designations.
7-21	National stock number	Show the identification number assigned to the item of supply (7-10 Federal Supply Classification code; 11-19 National Item Identification Number; 20-21 Materiel Management code or Service Management code as applicable.)
22	Hazardous	When the item is regulated by Title 49, CFR or AFR 71-4/DLAM 4145.3/TM38-250/NAVSUP PUB 505/MCO P4030.19, a code "D" will be annotated in this column. When the item is not regulated, a code "N" will be annotated in this column.
23-25	Quantity per unit pack (for non-Army applications)	State quantity per unit pack (QUP) in the clear. For items in excess of 999, use codes contained in MIL-STD-2073-2.
26-28	Intermediate container quantity (for non-Army applications)	When intermediate containers are used, enter the number of unit packs to be included in the intermediate container in the clear up to 100. If there is no requirement for intermediate containers, enter "000". Additional callout options are contained in MIL-STD-2073-2.
23-28	Quantity per unit/intermediate pack (for Army applications)	State quantity per unit pack (QUP) in columns 23-25. State the number of unit packs to be included in the intermediate container in columns 26-28. If QUP exceeds 999, enter "U" in column 23 and

Source: https://assist.dla.mil -- Downloaded: 2016-10-21T11:02Z
Check the source to verify that this is the current version before use.

TABLE II. Preservation - Packing data (continued).

Column Number	Element of Data	Explanation or Instructions
		the actual unit pack quantity in columns 24-28, right justified, zero filled.
29-30	Method of preservation	These columns may be blank if column 74 (in-the-clear reference) is "C" or "S". Otherwise, select appropriate code from Tables I, Ia, or Ib of MIL-STD-2073-2. Determination of method of preservation shall be based on one of the following: (a) Table I of Appendix C. Identify the appropriate submethod applicable to the item in accordance with MIL-P-116. (b) When packaging in accordance with a commodity specification, originator may show the appropriate submethod applicable to the item according to the specification. (c) Table IV of Appendix C for common group items. (d) When packaging in accordance with a SPI, originator may show ZZ in these columns, provide the SPI number in supplemental data and proceed to column 42 for the next data element required. Data elements 43-44, Table I, and 29-41 of this table are not mandatory in this case.
31	Cleaning and drying procedure	This column may be blank if column 74 (in-the-clear reference) is "C" or "S". Otherwise, select appropriate code from Table II of MIL-STD-2073-2. See Table IV of Appendix C for common group items.

Source: https://assist.dla.mil -- Downloaded: 2016-10-21T11:02Z
Check the source to verify that this is the current version before use.

APPENDIX K

TABLE II. Preservation - Packing data (continued).

Column Number	Element of Data	Explanation or Instructions
32-33	Preservative material	These columns may be blank if column 74 (in-the-clear reference) is "C" or "S". Otherwise, select appropriate code from Table III of MIL-STD-2073-2. See Table IV of Appendix C for common group items.
34-35	Wrap	These columns may be blank if column 74 (in-the-clear reference) is "C" or "S". Otherwise, select appropriate code from Table IV of MIL-STD-2073-2. See Table IV of Appendix C for common group items.
36-37	Cushioning and dunnage	These columns may be blank if column 74 (in-the-clear reference) is "C" or "S". Otherwise, select appropriate code from Table V of MIL-STD-2073-2. See Table IV of Appendix C for common group items.
38	Cushioning thickness	This column may be blank if column 74 (in-the-clear reference) is "C" or "S". Otherwise, select appropriate code from Table VI of MIL-STD-2073-2. See Table IV of Appendix C for common group items.
39-40	Unit container	These columns may be blank if column 74 (in-the-clear reference) is "C" or "S". Otherwise, select appropriate code from Table VII of MIL-STD-2073-2. See Table IV of Appendix C for common group items.
41	Degree of protection	Select appropriate code from Table VIII of MIL-STD-2073-2. See Table IV of Appendix C for common group items.
42-43	Intermediate container	Select appropriate code from Table VII of MIL-STD-2073-2. Leave blank if column 23 contains a "U".

Source: https://assist.dla.mil -- Downloaded: 2016-10-21T11:02Z
Check the source to verify that this is the current version before use.

APPENDIX K

TABLE II. Preservation - Packing data (continued).

Column Number	Element of Data	Explanation or Instructions
44	Unit container level	Enter the following as applicable: (a) Enter code "0" to denote the unit container is not an acceptable shipping container. (b) When the unit container is an acceptable shipping container, enter the highest level of protection afforded by the container from the following: Enter "A" if the unit container provides level A protection. Enter "B" if the unit container provides level B protection. Enter "C" if the unit container provides level C protection. Enter "D" to indicate that no container is required. Enter "X" when unit container provides minimum protection with commercial packaging. Enter Z when container affords, or is limited to, special consideration (air only, inside storage only, etc.).
45-46	Special marking	Select appropriate code from Table X of MIL-STD-2073-2. When more than one code or a combination of codes not included in the table must be specified, show "ZZ" and specify in supplemental data. If provided in Table I, columns 43-44, do not provide here.

Source: https://assist.dla.mil -- Downloaded: 2016-10-21T11:02Z
Check the source to verify that this is the current version before use.

APPENDIX K

TABLE II. Preservation - Packing data (continued).

Column Number	Element of Data	Explanation or Instructions
47	Level A packing	When Level A is required, select appropriate code from Table IX of MIL-STD-2073-2.
48	Level B packing	When Level B is required, select appropriate code from Table IX of MIL-STD-2073-2.
49	Minimum packing	When Level C or commercial packing is required, select appropriate code from Table IX of MIL-STD-2073-2.
50-54	Unit pack weight	Show actual unit pack weight in the clear to the nearest one tenth of a pound up to 9,999.9. Use zeros to fill voids. For items in excess of 9,999.9, show weight in whole pounds as follows: (a) Show "A" in column 50 and the whole number in columns 51-54 to represent the number given times (X) 10 (e.g., A9999=99,990). (b) Show "B" in column 50 and the whole number in columns 51-54 to represent the number given times (X) 100 (e.g., B9999=999,900). (c) Show "C" in column 50 and the whole number in columns 51-54 to represent the number given times (X) 1,000 (e.g., C9999=9,999,000).
55-66	Unit pack size	Show unit container outside dimensions in the clear to the nearest .1 of an inch in order by length, width, and depth. Dimensions less than .1 show as "0001." Use zeros to fill voids (e.g., "0024", "0001", etc.).

Source: https://assist.dla.mil -- Downloaded: 2016-10-21T11:02Z
Check the source to verify that this is the current version before use.

APPENDIX K

TABLE II. Preservation - Packing data (continued).

Column Number	Element of Data	Explanation or Instructions
67-73	Unit pack cube	Show actual cube of the unit pack to the nearest one thousandth of a cubic foot up to 9,999.999 cubic feet. For items with cube in excess of 9,999.999 cubic feet, show X in column 67 and indicate cube in whole cubic feet in columns 68-73.
74-78	In-the-clear reference	Unless otherwise specified, leave blank. When data is specifically requested for these columns, enter one of the following: (a) Common group items. Enter "C" in column 74 followed by the category code (e.g., C15AO). See column 39-42 of Table I. (b) Selective group items. Enter "S" in column 74 followed by a four digit identifying number that will be provided by DoD buying activity (e.g., SA123). (c) Special group items. Enter "SPI" in columns 74-76.
79	Optional procedure indicator	Enter one of the following: (a) Enter "A" if packaging is governed by a specification or standard other than those referenced in the preservation method code columns (29-30) or by a SPI (see 40.). Show the appropriate specificaton number in the supplemental data area. The options, if any, in the specification or order shall apply to subsequent users.

Source: https://assist.dla.mil -- Downloaded: 2016-10-21T11:02Z
Check the source to verify that this is the current version before use.

TABLE II. Preservation - Packing data (continued).

Column Number	Element of Data	Explanation or Instructions
		(b) Enter "M" if all packaging data are mandatory for compliance and no substitution is permitted. Deviation from any of these elements shall have prior approval of the buying activity. Fast Packs should be included in this category.
		(c) Enter "O" if an option can be exercised as to the submethod and packaging materials to be used. However, the basic preservation method shall be retained, requirements as indicated in supplemental data shall be complied with, and unit package dimensions shall not be increased. There shall be no increased cost to the Government and equal or better protection shall be given the item. Prior approval of the buying activity is not required under these conditions.
		(d) Enter "E" to indicate that options can be exercised as to the submethod and/or some of the packaging materials to be used but not all of them. In such cases, the options that may be exercised must be indicated in supplemental data. However, the basic preservation method shall be retained and unit package dimensions shall not be increased. There shall be no increased cost to the Government and equal or better protection shall be given the item. Prior approval of the

Source: https://assist.dla.mil -- Downloaded: 2016-10-21T11:02Z
Check the source to verify that this is the current version before use.

TABLE II. Preservation - Packing data (continued).

Column Number	Element of Data	Explanation or Instructions
		buying activity is not required under these conditions. (e) Enter codes F or R for special options as they apply to use of polyurethane foam-in-place for other than SPI items and will supplement the coded data. The codes relate to MIL-P-26514 and are defined as "F" for flexible (Type II, Class 2, Grade C) and "R" for rigid foam-in-place (Type II, Class 1). These codes will sometimes require stipulation of supplemental data. If foam-in-place requires a larger container than other normally acceptable packaging (conventional), the foam-in-place container requirements will be coded in place of the conventional data. Limitations and freedoms indicated by Optional Procedure Code "O" also apply to these codes, except that two maximum container sizes may be specified; one for foam-in-place and one for other options. The second container size will be expressed as supplemental data. (f) Enter "P" if an SPI governs the packaging but permission is granted to use polyurethane foam-in-place as specified on the SPI only when the SPI pack is not available.

Source: https://assist.dla.mil -- Downloaded: 2016-10-21T11:02Z
Check the source to verify that this is the current version before use.

TABLE II. Preservation - Packing data (continued).

Column Number	Element of Data	Explanation or Instructions
80	Supplemental card indicator	Enter one of the following as appropriate: (a) If an A and B card will be used, enter "2." (b) If an A, B and C card will be used, enter "3." (c) If an A, B and D card will be used, enter "4."

30.2.6 Supplemental data. The elements of data in Table III are mandatory when supplemental data is required. A "3" in column 80 of Tables I and II indicate supplemental data is required. Supplemental data is pertinent to the packaging process and is required in addition to that shown in the preservation and packing data area. Supplemental data shall be recorded in a narrative form as described in Table III. Narrative shall show only explanatory or instructional type information which directly supplements the elements of the packaging requirements code in the preservation-packing data areas (Table II). Only one line of supplemental data is permitted for any one item. If necessary supplemental data would exceed one line, an SPI shall be prepared in accordance with instructions in 40.

TABLE III. Supplemental data.

Column Number	Element of Data	Explanation or Instructions
1	Document identifier	Enter "C" to identify as supplemental data.
2-6		Reserved for system document control and identification numbers and applicable prefix designations.
7-21	National stock number	Show the identification number assigned to the item of supply (7-10 Federal Supply Classification code; 11-19 National Item Identification Number; 20-21 Materiel Management code or Service Management code as applicable).

Source: https://assist.dla.mil -- Downloaded: 2016-10-21T11:02Z
Check the source to verify that this is the current version before use.

TABLE III. Supplemental data (continued).

Column Number	Element of Data	Explanation or Instructions
22-80	Supplemental instructions	Enter data in accordance with the following: Show a maximum of 59 digits including spaces. Leave one space between words, codes, and symbols. The following are examples of data: (a) APPLY PRESERV 02 ON BARE AREA. (Note that code for appropriate preservative is selected from Table III of MIL-STD-2073-2.) (b) CUSHION ENDS WITH BD. (Note that code for appropriate material is selected from Table V of MIL-STD-2073-2.) (c) PLACE DIPSTICK IN BE BAG AND SECURE TO VALVE. (The code for appropriate bag was selected from Table VII of MIL-STD-2073-2.) (d) MIL-B-6428. (Code "A" in column 79 of preservation-packing data (see Table II) requires that applicable specification be shown in supplemental data area.)

30.2.7 Special packaging instruction (SPI) data. An SPI will be developed when supplemental data does not include sufficient detail to reproduce the complete package without the item. When a SPI is required, the elements of data in Table IV shall be required as applicable. A "4" in column 80 of Tables I and II indicate an SPI is required.

Source: https://assist.dla.mil -- Downloaded: 2016-10-21T11:02Z
Check the source to verify that this is the current version before use.

APPENDIX K

TABLE IV. Special packaging instruction data.

Column Number	Element of Data	Explanation or Instructions
1	Document identifier	Enter "D" to identify special packaging instruction data.
2-6		Reserved for system document control and identification numbers and applicable prefix designations.
7-21	National stock number	Show the identification number assigned to the item of supply (7-10 Federal Supply Classification code; 11-19 National Item Identification Number; 20-21 Materiel Management code or Service Management code as applicable.)
22-26	Packaging design activity code identification number	Enter the 5-digit numerical FSCM code of the packaging design activity, assigned in conformance with Cataloging Handbook H4-1.
27-36	SPI number	Enter the SPI number provided by the service or agency.
37	Revision	Enter the revision symbol as an alphabetic character beginning with an "A" for the first revision, then proceeding through the alphabet for each succeeding revision.
38-40	Not used	
41-45	SPI date	Enter the ordinal date, reflecting the two-position year and three-position day of the last revision of the SPI (e.g., January 1, 1977 would be "77001"). Do not use spaces or dashes.
46-61	Container NSN	Show the National Stock Number of the long-life container required (3.18.14.1), if applicable
62-80	Not used	

Source: https://assist.dla.mil Downloaded: 2016-10-21T11:02Z
Check the source to verify that this is the current version before use.

30.2.8 Compatibility with requirements for configuration item specifications.

30.2.8.1 Compliance with Section 5 data, configuration item specification. When the contract requres development of a CI specificaton, the packaging data developed and submitted in accordance with this standard shall reflect the packaging requirements incorporated into Section 5 of the approved applicable CI specification.

30.2.8.2 Submittal of drawings for special study items. When SPIs are required and packaging drawings for the same item have been developed and approved in accordance with the requirements and procedures outlined in another approved DoD document for special study items, the drawing shall be submitted in lieu of the SPI. These drawings, however, must meet the requirements of 40.3.5. This does not negate the requirement for submission of the related Figure 1 format as applicable.

30.2.8.3 Submittal of compatible data. In no instance shall data be submitted which deviates from or conflicts with the specified packaging requirements of the approved CI specification. The prime contractor shall ensure that all packaging data submitted (including those from lower tier contractors) are compatible prior to submitting to DoD agencies.

30.3 Conditions for approval of contractor developed packaging data.

30.3.1 Procedures for submitting forms for approval. Unless otherwise specified in the contract, the contractor shall submit for approval the packaging data prepared for each item in accordance with 30. and 40. Approval shall be obtained prior to production packaging except for deviations which are in compliance with 30.3.1.1 and 30.3.1.2 below. Contractor-prepared forms shall be submitted for approval within ten days after completion. Contractor shall not submit forms in groups of more than 100.

30.3.1.1 Approval of data without National Stock Numbers. Forms shall not be submitted for approval of packaging data without a National Stock Number (NSN) unless authorized by the contracting agency or unless emergency type shipments are required prior to assignment of a NSN. An emergency situation is defined as a requirement for direct support of a system when a situation such as work stoppage or condition status of the system might otherwise prevent it from performing its mission. When PCAM cards are furnished for approval without NSN identification, the design activity's code, design activity's part number, and CI specificaton number, when applicable, shall be legibly handscribed across the top of the cards. The Federal Supply Classification code (FSC) and Service Management code shall be key punched into the appropriate spaces of the PCAM formats. Upon receipt of the complete NSN, the contractor shall enter these on the packaging data form and forward one copy to the DoD contracting activity (packaging organization).

30.3.1.2 Approval of data for emergency shipments. When packaging data approval cannot be obtained prior to initial shipment of material which is directed by an emergency situation, the packaging data may, upon arrival of the administrative contracting officer, be submitted to the appropriate office

Source: https://assist.dla.mil -- Downloaded: 2016-10-21T11:02Z
Check the source to verify that this is the current version before use.

simultaneously with shipment of the materiel. In no case shall additional shipments of remaining identical items not required for emergency shipments be allowed prior to data submittal without approval of the DoD contracting activity (packaging organization).

30.3.1.3 Approval of data of interest to one DoD agency. All packaging data which are of sole interest to a particular DoD service or agency shall be submitted as applicable to the DoD agency having item management responsibility for approval.

30.3.1.4 Use of background data for approval. The contractor shall make available, when requested by the responsible DoD packaging activity (packaging organization), sufficient background data (test reports, drawings or engineering details) to permit the reviewing activity to determine the adequacy of the contractor prepared packaging data. When mutually agreed upon between the contracting activity and contractor, certified laboratory test reports are used as justification for approval, copies of the report shall be furnished the responsible DoD Item Manager packaging organization.

30.3.2 Integrated Logistics Data File (ILDF). When packaging data is transmitted electronically such as the ILDF, procedures for submittal, approval, and revision of packaging data shall be as specified in the contract.

30.3.3 Blanket approval of data. Blanket approval of a contractor's packaging data is permitted by the responsible DoD contracting activity (packaging organization) for common items in lieu of individual approval of each data element as required above.

30.3.4 Return of approved data. Upon approval, the DoD contracting activity (packaging organization) shall return one copy of the approved data to the contractor for file. Approval shall be indicated by application of the approval stamp on the applicable forms. The DoD contracting activity (packaging organization) will advise the contractor of approval or requirements for changes within 20 days after receipt of data.

30.4 Transmittal of data. The data required by this standard shall be in accordance with applicable data item description DI-L-7135 and must be referenced on the applicable Contract Data Requirements List (DD Form 1423). Necessary modification to the data item description must be shown on the DD Form 1423.

30.4.1 Preservation and packing. The contractor shall submit the Figure 1 data in the following formats unless otherwise specified on the DD Form 1423: manual, PCAM, or tape when specified in the contract. The contractor must submit the data as outlined below.

a. Unless otherwise specified on the DD Form 1423, two (2) copies of either Figure 1, PCAM cards, or tape, when specified, shall be forwarded, along with a letter of transmittal showing quantity of items for which forms are submitted, directly to the DoD contracting activity. The letter of transmittal shall specify the contract and order number and shall list the

Source: https://assist.dla.mil -- Downloaded: 2016-10-21T11:02Z
Check the source to verify that this is the current version before use.

items for which the forms are submitted. The DoD contracting activity (packaging organization) shall sign and return the letter of transmittal with the approved copies of the data.

b. When PCAM cards are submitted, the letter of transmittal shall also list, by NSN, those items for which CI specifications are also required by the contract. When specified on the DD Form 1423, a print out in NSN sequence will accompany the PCAM card format.

30.4.2 Special packaging instructions. When special packaging instructions are required, one full sized reproducible master and one reproduced copy of Figure 2, unless otherwise specified on the DD Form 1423, shall be forwarded to the DoD contracting activity (packaging organization). Submittals shall be suitably protected to assure delivery of legible copy. Folding of the master copies is not permitted. When specified, aperture cards may be used. The DoD contracting activity (packaging organization) shall retain the full size master reproducible and return the approved reproduced copy to the contractor. In event the contractor requires an approved reproducible master, he shall submit two masters instead of one.

30.4.3 Method of transmission. Unless otherwise specified, the method of transmission of forms shall be routine mail.

40. Preparation of special packaging instruction (SPI).

40.1 General. Special packaging instructions shall be developed in accordance with data item description DI-L-7136. SPIs shall be prepared when the following conditions exist:

a. When the preservation-packing data area of DD Form 2326 (Figure 1) does not contain all necessary packaging requirements and

b. When all necessary packaging requirements to allow complete fabrication and assembly of the pack cannot be contained in one line of supplemental data.

40.2 Format. DD Form 2169 (Figure 2) shall be used when a SPI is required. Entries as shown in the example of Figure 2 shall be on all SPIs with notes as applicable to each SPI. When other engineering drawings are required, they shall be referenced on the SPI. When continuation sheets are required, DD Form 2169C shall be used. In no instance shall the drawing size impair the clarity or legibility of the SPI.

40.2.1 Identification. Each SPI shall be identified with the SPI number and code identification number of the design activity. Inclusion of design activity's part number shall be optional.

40.2.2 Details of completion of SPI. The data given shall be in sufficient detail to enable the package to be duplicated by the lowest skilled packer. Information contained on government-owned engineering drawings need not be duplicated on the SPI. When applicable, source maintenance and recoverability

Source: https://assist.dla.mil -- Downloaded: 2016-10-21T11:02Z
Check the source to verify that this is the current version before use.

codes and drawing number must appear on all SPIs that do not contain sufficient information to be duplicated and on preconstructed manufactured containers where the SPI shows assembly methods only. When details are required for shipping containers, packing data shall be shown for Levels A and B, and, if specified, Level C.

40.2.2.1 Additional information. The following additional information shall be included in each SPI:

a. Preservation (levels and method), including any modification to method of preservation.

b. Cleaning and drying requirements.

c. Preservative compound (when applicable).

d. Cushioning or dunnage, or both (when applicable) with dimensions. Indicate the specification, style, type, and class.

e. Inside and outside dimensions of container or completed package. Indicate the specification, style, type, and class of the container or complete package.

f. Cube of complete package (Not required for SPIs covering more than one NSN).

g. Gross weight of complete package (Not required for SPIs covering more than one NSN).

h. Special markings (e.g. opening and closing instructions when special type containers or securing media are used, marking of the SPI number on exterior containers where required, warning markings).

i. Bill of materials.

j. Codes and drawing numbers (when applicable).

k. Maximum fragility factor for which the SPI is designed, if available.

40.2.2.2 Details. All details required for fabrication of the package, including internal blocking, bracing, or contour supports shall be shown in their relationships to the item being packaged. When the instruction covers blocking and bracing of unpacked items, all details necessary to indicate handling and storage shall be provided, including instructions for cribbing, hoisting, tie down and supports. Axonometric, scaled perspective, photo drawings or orthographic drawings may be used to show the various components of the package in relation to each other and the contained item. Relationships of the component parts of the package may be shown by exploded or partial exploded views. In some instances clarity is best affected by showing the item in phantom lines.

Source: https://assist.dla.mil -- Downloaded: 2016-10-21T11:02Z
Check the source to verify that this is the current version before use.

40.2.2.3 Materials.

40.2.2.3.1 Lumber and plywood. Grades or types of lumber and plywood to be used shall be specified. Direction of surface grain of plywood shall be shown when it is a pertinent factor. Unless so specified, dimensions listed for lumber cross sections will be nominal while those listed for lengths are actual. Similarly, cut sizes of plywood sheeting are always expressed as actual.

40.2.2.3.2 Fiberboard. Fiberboard shall be identified as to type, class, variety, and grade if a particular type is required. Flute size and direction will also be reflected when required for design of the pack.

40.2:2.3.3 Isolation system. Specification, type, grade, class, thickness and density with load relationship of cushioning materials shall be specified. When shear mounts, vibration isolators, or other shock mitigation devices are used, they shall be identified and described.

40.2.2.3.4 Hardware. Unless otherwise specified, bolts, lag screws, etc., shall be of standard commercial grade with MS equivalency indicated, if available. Types of bolts, such as "carriage" and "machine" shall be indicated. Angle iron, strapping, and rod used as a securing media shall be clearly identified in accordance with applicable specification.

40.2.2.4 Specification containers. Construction details of federal and military specification containers need not be illustrated, except as necessary to clarify details of the package. The specificaton number and type of container shall be shown. All pertinent details shall be indicated when containers modified into special containers are used. Details for specialized shock mounts, preformed dunnage, etc., that will duplicate information on drawings prepared in accordance with DoD-STD-100 shall not be shown. However, the engineering drawing numbers shall be indicated.

40.2.2.5 Trade names. All items listed on the bill of materials shall be identified, whenever possible, to applicable federal or military specifications including types, grades, classes, styles, etc. Such items will not be identified by trade name, commercial source, or commercial specification. When an item is proposed for use that is not covered by any federal or military specification, the contractor shall provide sufficient background data to demonstrate the benefits to be derived from its use. When trade names, commercial sources, specification, or part numbers are used, the phrase "or equal" shall be added to the item identification.

40.2.2.6 Application of additional items. Similar items may be applied to a single SPI provided all interior supports or restraining media and container designed for the original item can be used for these items.

40.2.3 Styles. SPIs shall be developed using any one or a combination of the following:

a. Short narrative.

Source: https://assist.dla.mil -- Downloaded: 2016-10-21T11:02Z
Check the source to verify that this is the current version before use.

b. Axonometric drawings (oblique, cabinet, isometric, dimetric, trimetric).

c. Perspective drawings (developed by projection from orthographic drawings, by commercially available scaled grids, or by other methods where a scalable rendering results).

d. Photo-drawings (high contrast photographs in which all background and nonpertinent information has been removed).

e. Computer graphics.

f. Orthographic drawings (prepared in accordance with DoD-STD-100).

40.2.4 Variations in style and format. A variation in style and format can be used provided that the information specified above is included as applicable during preparation of the SPI.

40.3 Reproduction. SPIs shall be prepared in reproducible form. Original SPIs shall be in accordance with Figure 2 and shall be on reproducible masters or on aperture cards, as specified (see DD Form 1423). Aperture cards shall be in a form from which prints can be made, In instances where more than one sheet is required to describe the packaging, an aperture card shall be prepared for each sheet. Reproduction of engineering drawings shall be accomplished using standard drawing sheet sizes A, B, C, or D (DoD-STD-100). Sizes A, B, or C are preferred. When reduced, the drawing size shall not impair the clarity of the drawing.

50. In-the-clear packaging instructions.

50.1 General. In-the-clear packaging instructions may be required for common and selective group items. In-the clear packaging instructions shall be prepared when the following conditions exist:

a. When columns 74-78 of Table II contain a "C" followed by the category code.

b. When columns 74-78 of Table II contain a "S" followed by a four digit identifying number.

50.2 Example. Figure 3 is an example of in-the-clear information that can be provided a contractor by a buying activity.

Source: https://assist.dla.mil -- Downloaded: 2016-10-21T11:02Z
Check the source to verify that this is the current version before use.

APPENDIX K

PRESERVATION AND PACKING DATA

NOMENCLATURE

DESIGN ACTIVITY'S CODE (FSCM)

DESIGN ACTIVITY'S PART NUMBER

CONFIGURATION ITEMS SPECIFICATION NUMBER

APPROVAL STAMP

Form Approved
OMB No. 0704-0188
Expiration Date: June 30, 1986

ITEM IDENTIFICATION DATA (TABLE I)

	DOC CON	NATIONAL STOCK NUMBER FSC	NATIONAL STOCK NUMBER NIIN	NATIONAL STOCK NUMBER ADDL	ITEM WT. POUNDS 10	LENGTH INCHES 10	WIDTH INCHES 10	DEPTH INCHES 10	PKG P/C
	1 2 3 4 5 6	7 8 9 10	11 12 13 14 15 16 17 18 19	20 21	22 23 24 25 26	27 28 29 30	31 32 33 34	35 36 37 38	39 40
A									

CAT WF P	SPEC MKG	QUP QUP	QUP ICQ	FSCM	DRAWING OR PART NUMBER	SCI
41 42	43 44	45 46	47 48 49 50	51 52 53 54 55	56 57 58 59 60 61 62 63 64 65 66 67 68 69 70 71 72 73 74 75 76 77 78 79	80

PRESERVATION — PACKING DATA (TABLE II)

	DOC CON	NATIONAL STOCK NUMBER FSC	NATIONAL STOCK NUMBER NIIN	NATIONAL STOCK NUMBER ADDL	HM	QUP QUP	QUP ICQ	PRES METH	CD	PRES MTL	WRAP MTL	CUSH DUNN	CT	UNIT CONT
	1 2 3 4 5 6	7 8 9 10	11 12 13 14 15 16 17 18 19	20 21	22	23 24 25 26	27 28	29 30	31	32 33	34 35	36 37	38	39 40
B														

DP	INT CRT	UCL	SPEC MKG	PACK-ING	UNIT PACK WEIGHT	UNIT PACK SIZE LENGTH	UNIT PACK SIZE WIDTH	UNIT PACK SIZE DEPTH	UNIT PACK CUBE WHOLE CUBE	UNIT PACK CUBE 1000TH	IN-THE-CLEAR REFERENCE	OPI	SCI
41	42 43	44	45 46	47 48 49	50 51 52 53 54	55 56 57 58	59 60 61 62	63 64 65 66	67 68 69 70	71 72 73	74 75 76 77 78	79	80

SUPPLEMENTAL DATA (TABLE III)

	DOC CON	NATIONAL STOCK NUMBER FSC	NATIONAL STOCK NUMBER NIIN	NATIONAL STOCK NUMBER ADDL	IN-THE-CLEAR INSTRUCTIONS
	1 2 3 4 5 6	7 8 9 10	11 12 13 14 15 16 17 18 19	20 21	22 23 24 25 26 27 28 29 30 31 32 33 34 35 36 37 38 39 40
C					

41 42 43 44 45 46 47 48 49 50 51 52 53 54 55 56 57 58 59 60 61 62 63 64 65 66 67 68 69 70 71 72 73 74 75 76 77 78 79 80

SPECIAL PACKAGING INSTRUCTION DATA (TABLE IV)

	DOC CON	NATIONAL STOCK NUMBER FSC	NATIONAL STOCK NUMBER NIIN	NATIONAL STOCK NUMBER ADDL	CODE IDENT FSCM	SPI NUMBER	REV	
	1 2 3 4 5 6	7 8 9 10	11 12 13 14 15 16 17 18 19	20 21	22 23 24 25 26	27 28 29 30 31 32 33 34 35 36	37	38 39 40
D								

SPI DATE	CONT. NATIONAL STOCK NUMBER FSC	CONT. NATIONAL STOCK NUMBER NIIN	
41 42 43 44 45	46 47 48 49	50 51 52 53 54 55 56 57 58 59 60 61	62 63 64 65 66 67 68 69 70 71 72 73 74 75 76 77 78 79 80

DD Form 2326, 84 FEB

Figure 1. Preservation and packing data.

Source: https://assist.dla.mil Downloaded: 2016-10-21T11:02Z
Check the source to verify that this is the current version before use.

APPENDIX K

SPECIAL PACKAGING INSTRUCTION (MIL-STD-2073)	CODE IDENT	SPI NO.
	19204	0841728

PART OR DRAWING NO.	NATIONAL STOCK NO.	DATE	REVISION
1090094	6625 00 084 1728LF	77001	A

QUP	ICQ	UNIT PACK WT	UNIT PACK CUBE	UNIT PACK SIZE	
001	000	0266.2	0001.233	014.6 008.8 009.6	SHEET 1 OF 2

PRESERVATION
LEVEL A - MIL-P-116, Method I
LEVEL B - MIL-STD-2073-1A

CLEANING - MIL-P-116, C-1

DRYING - MIL-P-116

PACKING
LEVEL A - MIL-STD-2073-1A
LEVEL B - MIL-STD-2073-1A

MARKING MIL-STD-129

STEPS	REQD	DESCRIPTION
*1		Preservative, MIL-P-116, P-11
*2	1	Wrap, MIL-B-121, Grade A, Class 3 Type 1, 6"x12"
*3	1	Tape PPP-T-60, Type V, Class 2, 1"x14"
4	1	Container, PPP-B-636, RSC, WSC, 17"x10"x11" (Inside D) 18"x12"x12" (Outside D)
5	1	Pad, PPP-F-320, Grade W11C, 16 7/8" x9 7/8"
6	2	Blocking, see notes
7	2	Closure, PPP-T-76, 2"x20"

*Preserve and wrap end of pintle with specified material, securing wrap with specified tape.

NOTES:

1. MATERIAL FIBERBOARD
   SPEC...PPP-F-320
   GRADE.....W5C
2. STAPLES, TAPE, OR ADHESIVE MAY BE USED TO RETAIN FORM. IF ADHESIVE IS USED, IT SHALL CONFORM TO MMM-A-250 AND COVER NOT LESS THAN 50% OF THE AREA IN CONTACT. ANY SQUEEZE OUT SHALL BE REMOVED PRIOR TO SETTING.
3. TOLERANCE ± 1/16

DD FORM 1 JAN 79 2169

Figure 2. Special packaging instruction.

Source: https://assist.dla.mil - Downloaded: 2016-10-21T11:02Z
Check the source to verify that this is the current version before use.

SPECIAL PACKAGING INSTRUCTION MIL-STD-2073 (CONTINUATION SHEET)	CODE IDENT 19204	SPI NO. 084172809	
PART OR DRAWING NO. 1090094	NATIONAL STOCK NO. 6625 00 084 1728LF	DATE 77001	REVISION A
		SHEET 2 OF 2	

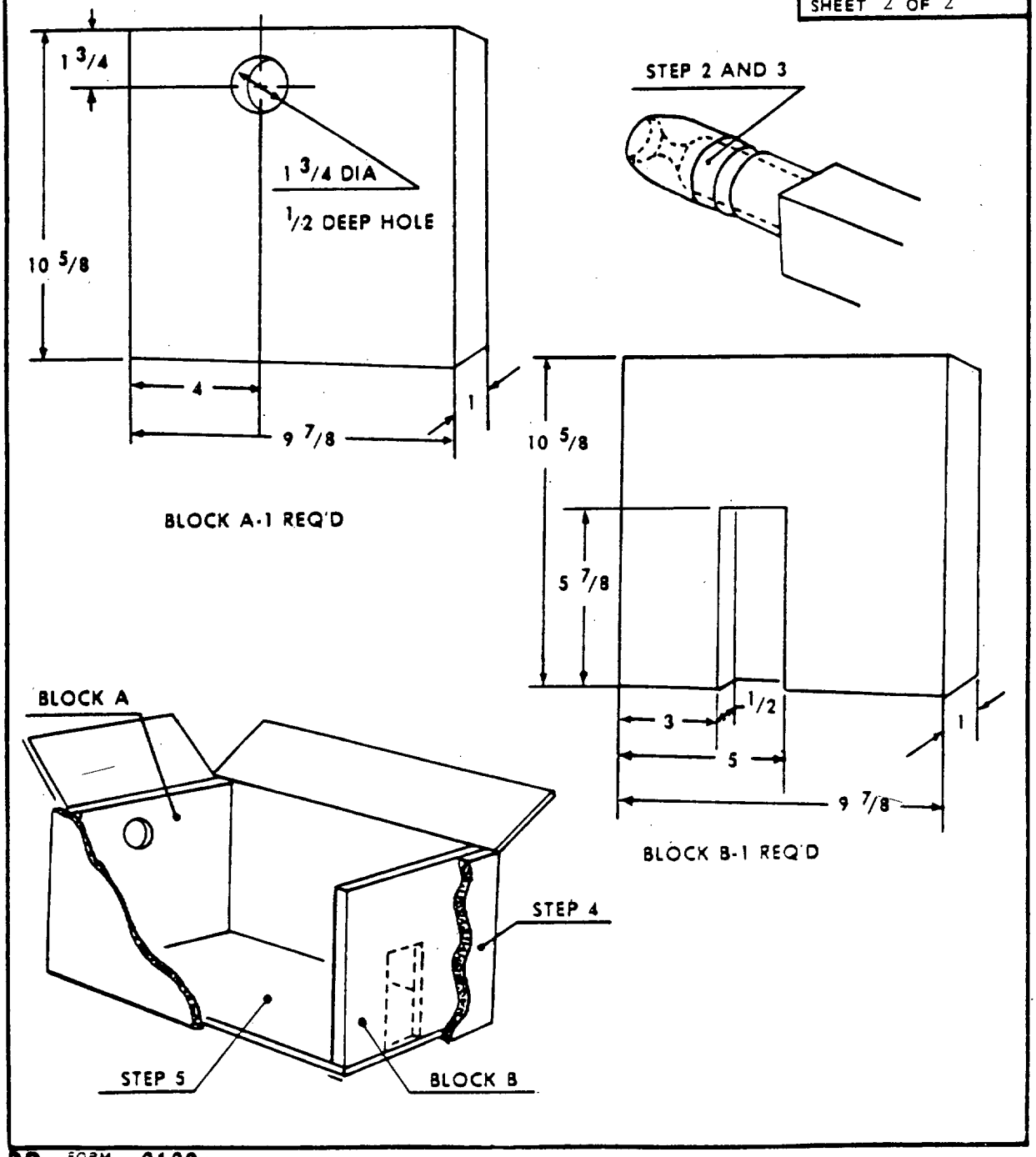

DD FORM 1 JAN 79 2169c

Figure 2. Special packaging instruction (continued).

Source: https://assist.dla.mil Downloaded: 2016-10-21T11:02Z
Check the source to verify that this is the current version before use.

APPENDIX K

MIL-STD-2073

PACKAGING INSTRUCTIONS	REVISION NO.	DATE

ITEM, PACKAGE DATA

DRAWING OR PART NUMBER	NATIONAL STOCK NUMBER	CONTROL	PACKAGING REFERENCE

FSCM	QNTY UNIT PK	INTER PK QNTY	UNIT PACK WEIGHT	UNIT PACK CUBE	UNIT PACK SIZE
					X X

UNIT PACK WEIGHT IS SHOWN IN 1/10THS OF A POUND AND POUNDS.	UNIT PACK CUBE IS SHOWN IN 1/1000THS OF A CUBIC FOOT AND CUBIC FEET.	UNIT PACK SIZE IS SHOWN IN 1/10THS OF AN INCH AND INCHES.

REMARKS

METHOD (MIL-P-116)	CLEANING (MIL-P-116)	DRYING (MIL-P-116)

REQUIREMENT	STEP	SPECIFICATION	STYLE	TYPE	GRADE	CLASS	FORM	NOTES
PRESERVATIVE								
PRESERVATIVE								
INTIMATE WRAP								
CUSHIONING								
STIFFENERS								
CONTAINER								
DESICCANT								
CLOSURE								
BAG/BARRIER								
CONTAINER								
CLOSURE								

NOTES

Figure 3. In-the-clear packaging instructions.

Source: https://assist.dla.mil -- Downloaded: 2016-10-21T11:02Z
Check the source to verify that this is the current version before use.

STANDARDIZATION DOCUMENT IMPROVEMENT PROPOSAL

(See Instructions – Reverse Side)

1. DOCUMENT NUMBER	2. DOCUMENT TITLE
MIL-STD-2073-1A	DoD Materiel Procedures for Development and Application of Packaging Requirements

3a. NAME OF SUBMITTING ORGANIZATION	4. TYPE OF ORGANIZATION *(Mark one)*
	☐ VENDOR
b. ADDRESS *(Street, City, State, ZIP Code)*	☐ USER
	☐ MANUFACTURER
	☐ OTHER *(Specify)*: _____

5. PROBLEM AREAS

a. Paragraph Number and Wording:

b. Recommended Wording:

c. Reason/Rationale for Recommendation:

6. REMARKS

7a. NAME OF SUBMITTER *(Last, First, MI)* – Optional	b. WORK TELEPHONE NUMBER *(Include Area Code)* – Optional
c. MAILING ADDRESS *(Street, City, State, ZIP Code)* – Optional	8. DATE OF SUBMISSION *(YYMMDD)*

DD FORM 1426, 82 MAR

PREVIOUS EDITION IS OBSOLETE.

Source: https://assist.dla.mil -- Downloaded: 2016-10-21T11:02Z
Check the source to verify that this is the current version before use.