INCH-POUND

MIL-T-29504/1A
19 December 1989
SUPERSEDING
MIL-T-29504/1
15 August 1987

MILITARY SPECIFICATION SHEET

TERMINI, FIBER OPTIC, CONNECTOR, REMOVABLE,
(A) ENVIRONMENT RESISTING, CLASS 2, TYPE II, STYLE A,
PIN TERMINUS, (FOR MIL-C-28876 and MIL-C-83526 CONNECTORS)

This specification sheet is approved for use by all Departments and Agencies of the Department of Defense.

The requirements for acquiring the product described herein shall consist of this specification sheet and the issue of the following specification listed in that issue of the Department of Defense Index of Specifications and Standards (DODISS) specified in the solicitation: MIL-T-29504.

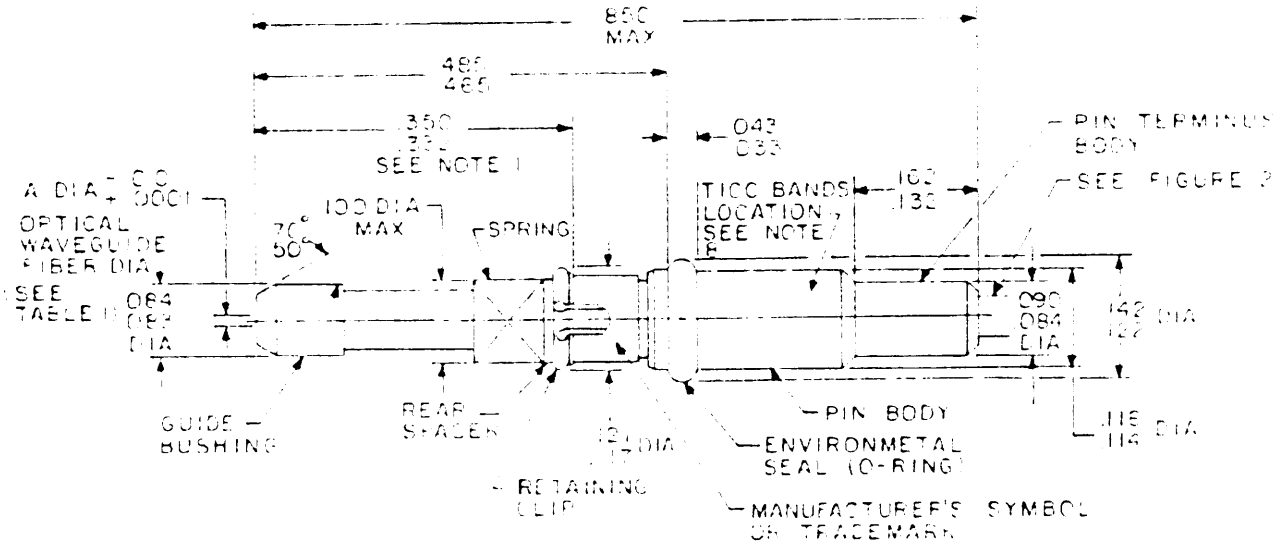

FIGURE 1. Pin terminus.

(A) denotes changes

DISTRIBUTION STATEMENT A. Approved for public release; distribution is unlimited.

Source: https://assist.dla.mil -- Downloaded: 2016-12-10T05:27Z
Check the source to verify that this is the current version before use.

Inches	mm		Inches	mm
.0001	0.00	||	.121	3.07
.033	0.83	||	.122	3.09
.043	1.09	||	.132	3.35
.083	2.10	||	.142	3.60
.084	2.13	||	.162	4.11
.090	2.28	||	.332	8.43
.100	2.54	||	.362	9.19
.102	2.59	||	.465	11.81
.114	2.89	||	.485	12.31
.117	2.97	||	.833	21.15
.118	2.99	||	.850	21.59

NOTES:

1. These are unmated dimensions and will decrease .040 maximum as Belleville Springs compress during mating.
2. Dimensions are in inches.
3. Metric equivalents are given for general information only, except for guide bushing "A" diameter which is based upon 1.00 inch = 25400.0 µm or 1.0 µm = .00003937 inch.
4. All diameters to be concentric within .002 (0.05 mm).
5. Dimensions apply after plating.
6. (O-ring) is a fluorosilicone material.
7. For internal configuration and dimensions of terminus rear, see figure 2.
8. The TICC bands shall be at the rear of the pin terminus.
9. Dimension to be measured with terminus installed in connector insert or equivalent gauge fixture.

FIGURE 1. Pin terminus - Continued.

Source: https://assist.dla.mil -- Downloaded: 2016-12-10T05:27Z
Check the source to verify that this is the current version before use.

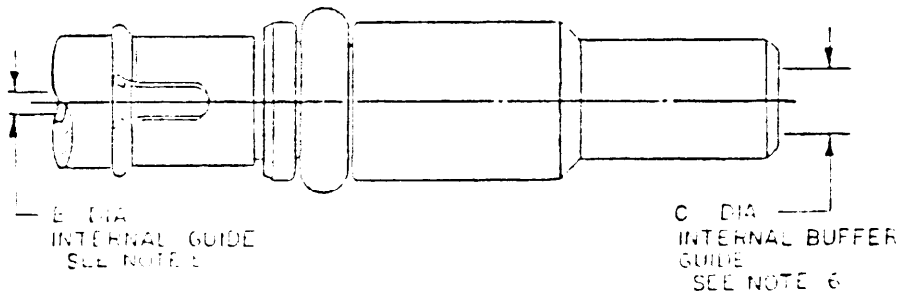

B diameter (internal guide)		C diameter (internal buffer guide)	
Inches	mm	Inches	mm
.017 .014	0.43 0.35	.044 .040	1.12 1.01

NOTES:
1. Dimensions are in inches.
2. Metric equivalents are given for general information only.
3. All diameters to be concentric within .002 (0.05 mm).
4. Dimensions shown after plating.
5. The "B" diameter of the internal guide is used to center coated optical waveguide fiber.
6. The "C" diameter of the internal buffer guide is used to center the optical waveguide fiber buffer.

FIGURE 2. Terminus internal guide and buffer.

Source: https://assist.dla.mil -- Downloaded: 2016-12-10T05:27Z
Check the source to verify that this is the current version before use.

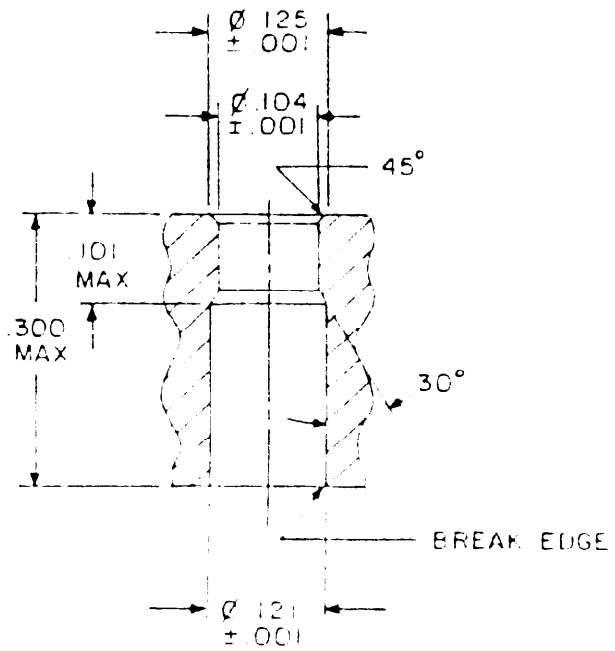

Inches	mm
.0001	0.00
.101	2.56
.104	2.64
.121	3.07
.125	3.17
.300	7.62

NOTES:
1. Dimensions are in inches.
2. Metric equivalents are given for general information only.
3. All diameters to be concentric within .002 (0.05 mm).
4. Dimensions shown after plating.

FIGURE 3. Insert equivalent for contact measurement.

Source: https://assist.dla.mil -- Downloaded: 2016-12-10T05:27Z
Check the source to verify that this is the current version before use.

REQUIREMENTS:

Design and construction:

Dimensions and configuration: See figures 1 and 2 and table I.

(A) Weight: 1 gram maximum.

Adhesives: Use Hysol 1c (-55°C to +85°C temperature range), Epotek 330/353 series (-55°C to +85°C temperature range) or equivalent as approved by the qualifying activity. Mixing and curing instructions shall be supplied with the assembly instructions provided with each termini or applicable connector.

Tools: See table II.

Mating termini: MIL-T-29504/2.

TABLE I. TICC numbers to fiber diameter cross reference.

TICC	A diameter (fiber diameter) maximum	
	Inches	µm
4000	.0047	119.5
4001	.0048	122.0
4002	.0049	124.5
4003	.0050	127.0
4004	.0051	129.5
4005	.0052	132.0
4006	.0053	134.5
4007	.0054	137.0
4008	.0055	139.5
4009	.0056	142.0
4010	.0057	145.0
4011	.0076	193.0
4012	.0077	195.5
4013	.0078	198.0
4014	.0079	200.5
4015	.0080	203.0
4016	.0081	205.5
4017	.0082	208.0
4018	.0083	211.0

TABLE II. Tools.

End size	Insertion tool	Removal tool	Polishing fixture tool
16	M81969/46-01 or M81969/49-01	M81969/47-01	M83523/6-01

Source: https://assist.dla.mil -- Downloaded: 2016-12-10T05:27Z
Check the source to verify that this is the current version before use.

Part or Identifying Number (PIN): See table III.

Supersession data: See table III.

TABLE III. The PIN and supersession data.

TICC	PIN M29504/01-	Superseded PIN M28876/16-	Superseded manufacturer's PIN	CAGE
-4000 1/	4000	048XXX 2/	44970016048 0110	91662
			1093201-048FXXXS 2/	53669
-4001	4001	049XXX	1093201-049FXXXS	53669
-4002	4002	050XXX	1093201-050FXXXS	53669
-4003	4003	051XXX	1093201-051FXXXS	53669
-4004 1/	4004	052XXX	1093201-052FXXXS	53669
-4005 1/	4005	053XXX	1093201-053FXXXS	53669
-4006 1/	4006	054XXX	1093201-054FXXXS	53669
-4007	4007	055XXX	1093201-055FXXXS	53669
-4008	4008	056XXX	1093201-056FXXXS	53669
-4009	4009	057XXX	44970015057 7000	91662
			1093201-057FXXXS	53669
-4010 1/	4010	058XXX	1093201-058FXXXS	53669
-4011 1/	4011	077XXX	1093201-077FXXXS	53669
-4012 1/	4012	078XXX	1093201-078FXXXS	53669
-4013 1/	4013	079XXX	1093201-079FXXXS	53669
-4014 1/	4014	080XXX	1093201-080FXXXS	53669
-4015 1/	4015	081XXX	1093201-081FXXXS	53669
-4016 1/	4016	082XXX	1093201-082FXXXS	53669
-4017 1/	4017	083XXX	1093201-083FXXXS	53669
-4018 1/	4018	084XXX	1093201-084FXXXS	53669

1/ Inactive for new design.

2/ X - Indicates all numerical combinations possible.

Source: https://assist.dla.mil -- Downloaded: 2016-12-10T05:27Z
Check the source to verify that this is the current version before use.

Patent notice: The Government does not have royalty-free license under the following patents for the benefit of manufacturers of the item, either for the Government or for use in equipment to be delivered to the Government:

(A) Patent number	Patent expiration date
US 65,032	11/17/2004
US 260,660	01/08/2002
US 376,866	02/12/2002
US 403,446	01/15/2002

CONCLUDING MATERIAL

Custodians:
Army - CR
Navy - EC
Air Force - 85

Review activities:
Army - MI
Navy - AS, MC, SH
Air Force - 11, 17, 19, 70, 80, 90, 99
DLA - ES

User activities:
Army - AV
Navy - CG, MC, OS, YD
Air Force - 13, 14, 84

Preparing activity:
Navy - EC

Agent:
DLA - ES

(Project 6060-0078-1)

Source: https://assist.dla.mil -- Downloaded: 2016-12-10T05:27Z
Check the source to verify that this is the current version before use.

Source: https://assist.dla.mil -- Downloaded: 2016-12-10T05:27Z
Check the source to verify that this is the current version before use.