INCH - POUND

MIL-STD-2163B
28 May 1990

SUPERSEDING
MIL-STD-2163A
3 FEBRUARY 1987

# MILITARY STANDARD

## INSERT ARRANGEMENTS FOR MIL-C-28876 CONNECTORS, FIBER OPTIC, CIRCULAR, PLUG AND RECEPTACLE STYLE, MULTIPLE REMOVABLE TERMINI

AMSC N/A

FSC 6060

DISTRIBUTION STATEMENT A. Approved for public release; distribution is unlimited.

Source: https://assist.dla.mil -- Downloaded: 2016-12-10T08:23Z
Check the source to verify that this is the current version before use.

# FOREWORD

1. This military standard is approved for use by all Departments and Agencies of the Department of Defense.

2. Beneficial comments (recommendations, additions, deletions) and any pertinent data which may be of use in improving this document should be addressed to: Commander, Defense Electronics Supply Center, ATTN: DESC-ES, 1507 Wilmington Pike, Dayton, OH, 45444-5276 by using the self-addressed Standardization Document Improvement Proposal (DD Form 1426) appearing at the end of this document or by letter.



Source: https://assist.dla.mil -- Downloaded: 2016-12-10T08:23Z
Check the source to verify that this is the current version before use.

CONTENTS


| PARAGRAPH | | PAGE |
|---|---|---|
| 1. | SCOPE | 1 |
| 1.1 | Scope | 1 |
| 2. | APPLICABLE DOCUMENTS | 2 |
| 2.1 | Government documents | 2 |
| 2.1.1 | Specifications, standards, and handbooks | 2 |
| 2.2 | Non-Government publications | 2 |
| 2.3 | Order of precedence | 2 |
| 3. | DEFINITIONS | 3 |
| 3.1 | Terms | 3 |
| 4. | GENERAL REQUIREMENTS This section is not applicable to this standard. | 4 |
| 5. | DETAILED REQUIREMENTS | 5 |
| 5.1 | Dimensions | 5 |
| 5.2 | Termini | 5 |
| 5.3 | Marking | 5 |
| 5.4 | Drawing note | 5 |
| 5.4.1 | Termini locations | 5 |
| 6. | NOTES | 9 |
| 6.1 | Subject term (keyword) listing | 9 |
| 6.2 | Changes from previous issue | 9 |

FIGURES

| | | |
|---|---|---|
| 1. | Two-position termini arrangement for shell size 11 | 6 |
| 2. | Four-position termini arrangement for shell size 13 | 7 |
| 3. | Six- and eight-position termini arrangement for shell size 15 | 8 |




Source: https://assist.dla.mil -- Downloaded: 2016-12-10T08:23Z
Check the source to verify that this is the current version before use.

# 1. SCOPE

1.1 Scope. This document covers insert arrangements for use with MIL-C-28876 circular, plug and receptacle style, multiple removable termini, fiber optic connectors.



Source: https://assist.dla.mil -- Downloaded: 2016-12-10T08:23Z
Check the source to verify that this is the current version before use.

## 2. APPLICABLE DOCUMENTS

2.1 Government documents.

2.1.1 Specifications, standards, and handbooks. The following specifications, standards, and handbooks form a part of this document to the extent specified herein. Unless otherwise specified, the issues of these documents are those listed in the issue of the Department of Defense Index of Specifications and Standards (DODISS) and supplement thereto, cited in the solicitation.

SPECIFICATIONS

MILITARY

| | | |
|---|---|---|
| MIL-C-28876 | - | Connectors, Fiber Optic, Circular, Plug and Receptacle Style, Multiple Removable Termini, General Specification For. |
| MIL-C-29504/1 | - | Termini, Fiber Optic, Environment Resisting, Pin Terminus, Class I, Type II, Style A. |
| MIL-C-29504/2 | - | Termini, Fiber Optic, Environment Resisting, Socket Terminus, Class I, Type II, Style A. |
| MIL-C-29504/3 | - | Termini, Fiber Optic, Environment Resisting, Dummy Terminus. |

(Unless otherwise indicated, copies of federal and military specifications, standards, and handbooks are available from the Standardization Documents Order Desk, Building 4D, 700 Robbins Avenue, Philadelphia, PA 19111-5094.)

2.2 Non-Government publications. The following document forms a part of this document to the extent specified herein. Unless otherwise specified, the issues of the documents which are DOD adopted are those listed in the issue of the DODISS cited in the solicitation. Unless otherwise specified, the issues of documents not listed in the DODISS are the issues of the documents cited in the solicitation.

AMERICAN NATIONAL STANDARDS INSTITUTE (ANSI)

ANSI Y14.5M-82 - Dimensioning and Tolerancing. (DoD adopted)

(Application for copies should be addressed to the American National Standards Institute, 1430 Broadway, New York, NY 10018-3308.)

(Non-Government standards and other publications are normally available from the organizations that prepare or distribute the documents. These documents also may be available in or through libraries or other informational services.)

2.3 Order of precedence. In the event of a conflict between the text of this document and the references cited herein, the text of this document takes precedence. Nothing in this document, however, supersedes applicable laws and regulations unless a specific exemption has been obtained.



Source: https://assist.dla.mil -- Downloaded: 2016-12-10T08:23Z
Check the source to verify that this is the current version before use.

# 3. DEFINITIONS

3.1 Terms. The terms used in this document are generally accepted by the fiber optic industry and are commonly used in fiber optic connector engineering practice.



Source: https://assist.dla.mil -- Downloaded: 2016-12-10T08:23Z
Check the source to verify that this is the current version before use.

## 4. GENERAL REQUIREMENTS

This section is not applicable to this standard.



Source: https://assist.dla.mil -- Downloaded: 2016-12-10T08:23Z
Check the source to verify that this is the current version before use.

## 5. DETAILED REQUIREMENTS

5.1 Dimensions. Dimensions shall be in accordance with figures 1 through 4 herein, and the following dimensional data:

a. ▽ indicates the insulator indexing feature position and vertical centerline of insert arrangement.

b. Dimensioning and tolerancing in accordance with ANSI Y14.5M-82. (Dimensions are true position and are in inches.)

c. Metric equivalents are given in parentheses for general information only.

d. Dimensions and markings shown are for engaging face of socket insert (pin insert is opposite, right to left).

e. The following tolerances apply to insert installed in shell:

(1) The center of each hole in insert for epoxy terminus connectors shall be located at true position within .005 diameter ⊕ 0.005 Ⓡ.

(2) The center of engaging end of each terminus shall be located in true position within .010 diameter ⊕ 0.010 Ⓡ.

f. Unless otherwise indicated, dimensions are symmetrical about centerlines.

g. Each insert arrangement is shown in the "normal position" in the shell, with indexing feature at top of vertical centerline.

h. Shell polarization shall be in accordance with figure 5 of MIL-C-28876.

5.2 Termini. Termini shall be in accordance with MIL-T-29504/1, MIL-T-29504/2, and MIL-T-29504/3.

5.3 Marking. Marking shall be in accordance with MIL-C-28876.

5.4 Drawing note. The following information is applicable to all sections of this document.

5.4.1 Termini locations. All termini locations are given.



Source: https://assist.dla.mil -- Downloaded: 2016-12-10T08:23Z
Check the source to verify that this is the current version before use.

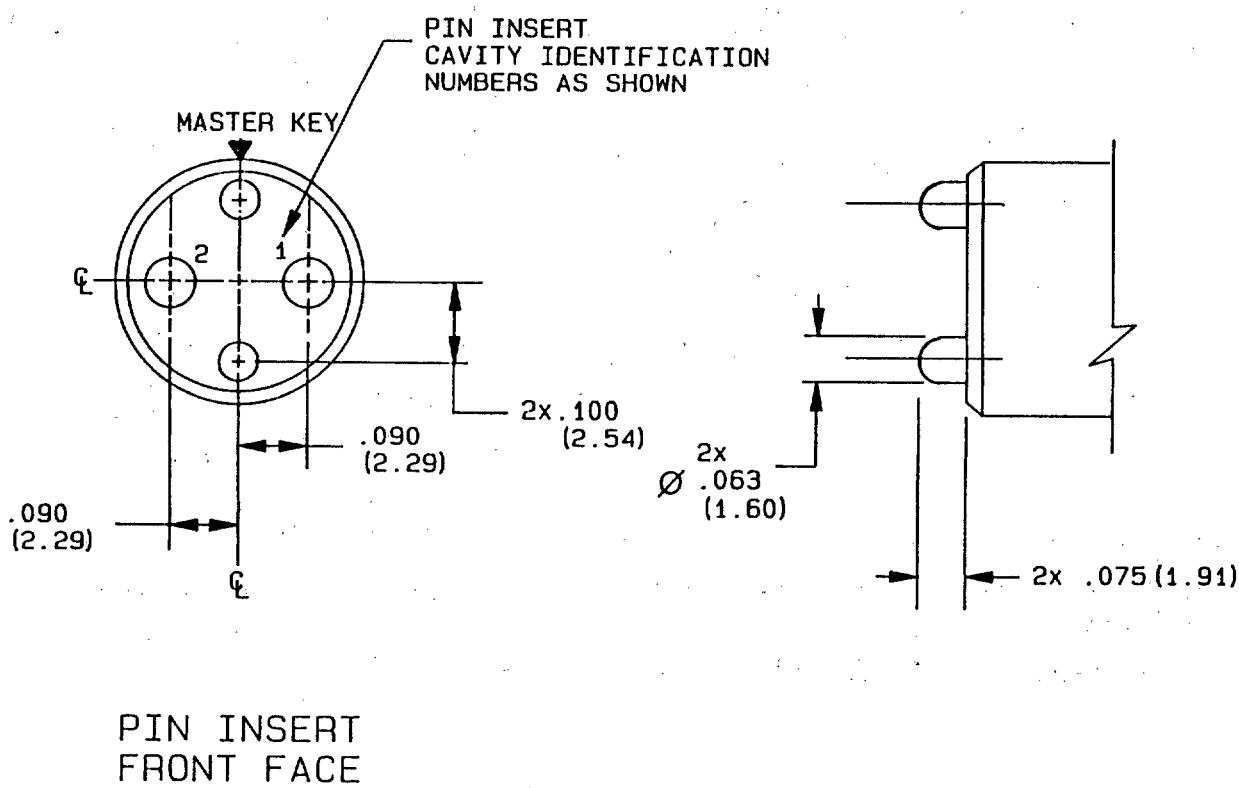


FIGURE 1. Two-position termini arrangement for shell size 11.



Source: https://assist.dla.mil -- Downloaded: 2016-12-10T08:23Z
Check the source to verify that this is the current version before use.

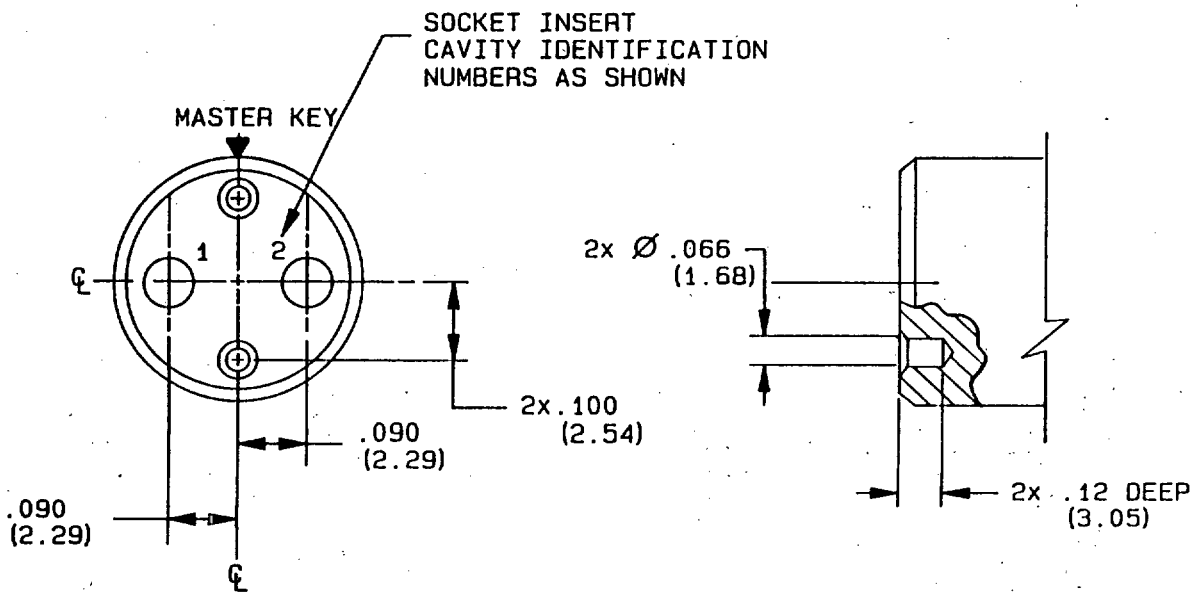


SOCKET INSERT
FRONT FACE

| Shell size | Shell size designator | Arrangement number | Number of termini | Termini size |
|---|---|---|---|---|
| 11 | A | 1 | 2 | 16 |

NOTES:
1. Dimensions are in inches.
2. Metric equivalents are given for general information only.
3. Metric equivalents are in parentheses.

FIGURE 1. Two-position termini arrangement for shell size 11 - Continued.



Source: https://assist.dla.mil -- Downloaded: 2016-12-10T08:23Z
Check the source to verify that this is the current version before use.

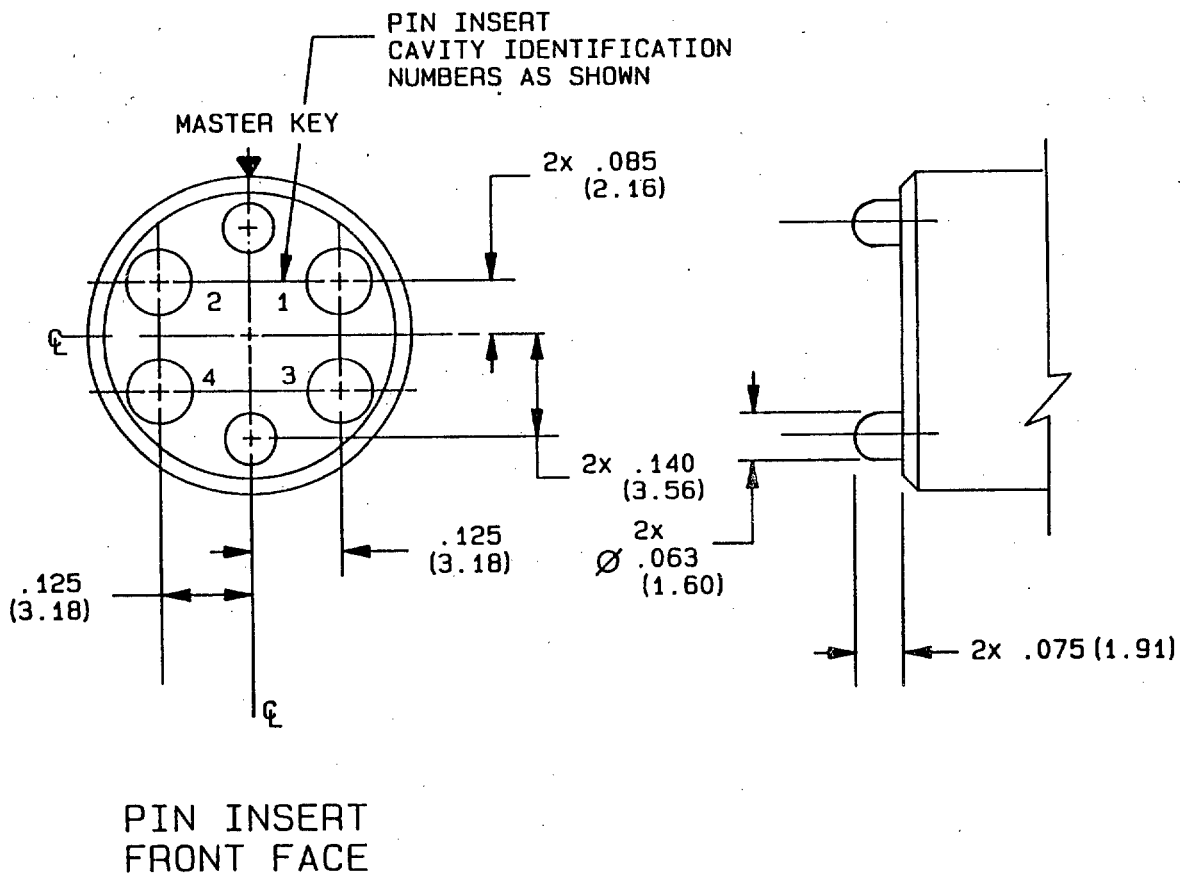


FIGURE 2. Four-position termini arrangement for shell size 13.



Source: https://assist.dla.mil -- Downloaded: 2016-12-10T08:23Z
Check the source to verify that this is the current version before use.

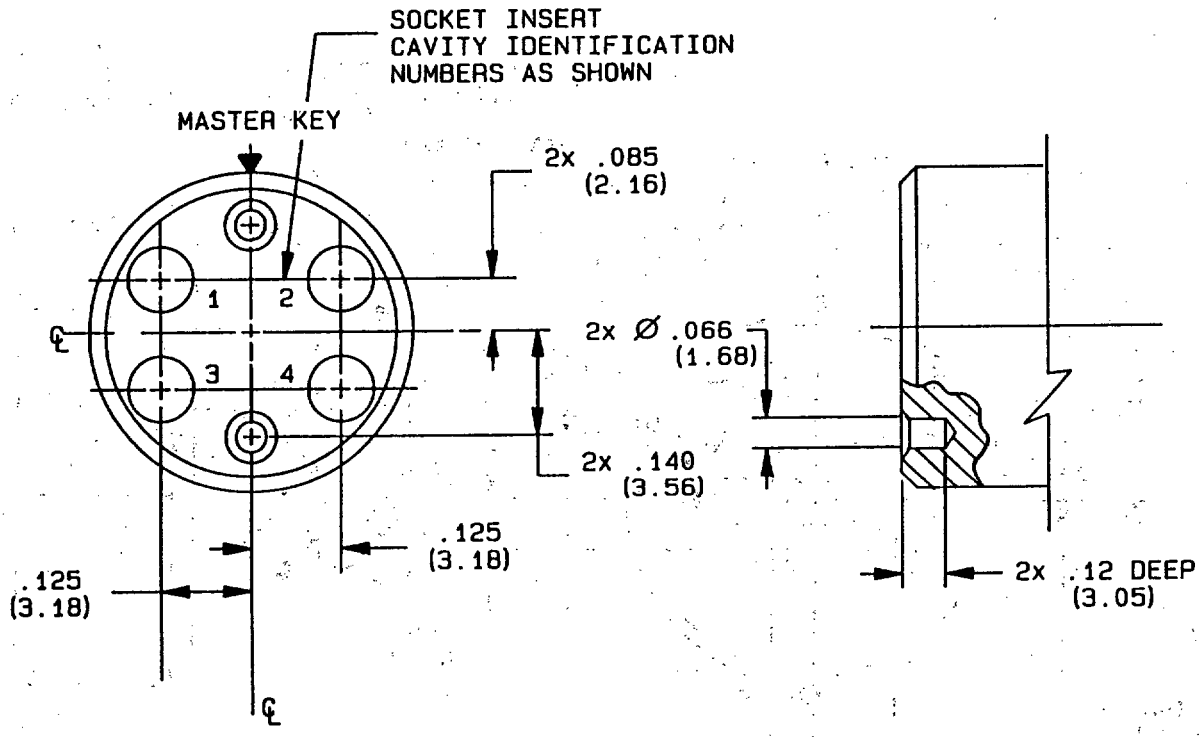


SOCKET INSERT
FRONT FACE

| Shell size | Shell size designator | Arrangement number | Number of termini | Termini size |
|---|---|---|---|---|
| 13 | B | 1 | 4 | 16 |

NOTES:
1. Dimensions are in inches.
2. Metric equivalents are given for general information only.
3. Metric equivalents are in parentheses.

FIGURE 2. Four-position termini arrangement for shell size 13 - Continued.



Source: https://assist.dla.mil -- Downloaded: 2016-12-10T08:23Z
Check the source to verify that this is the current version before use.

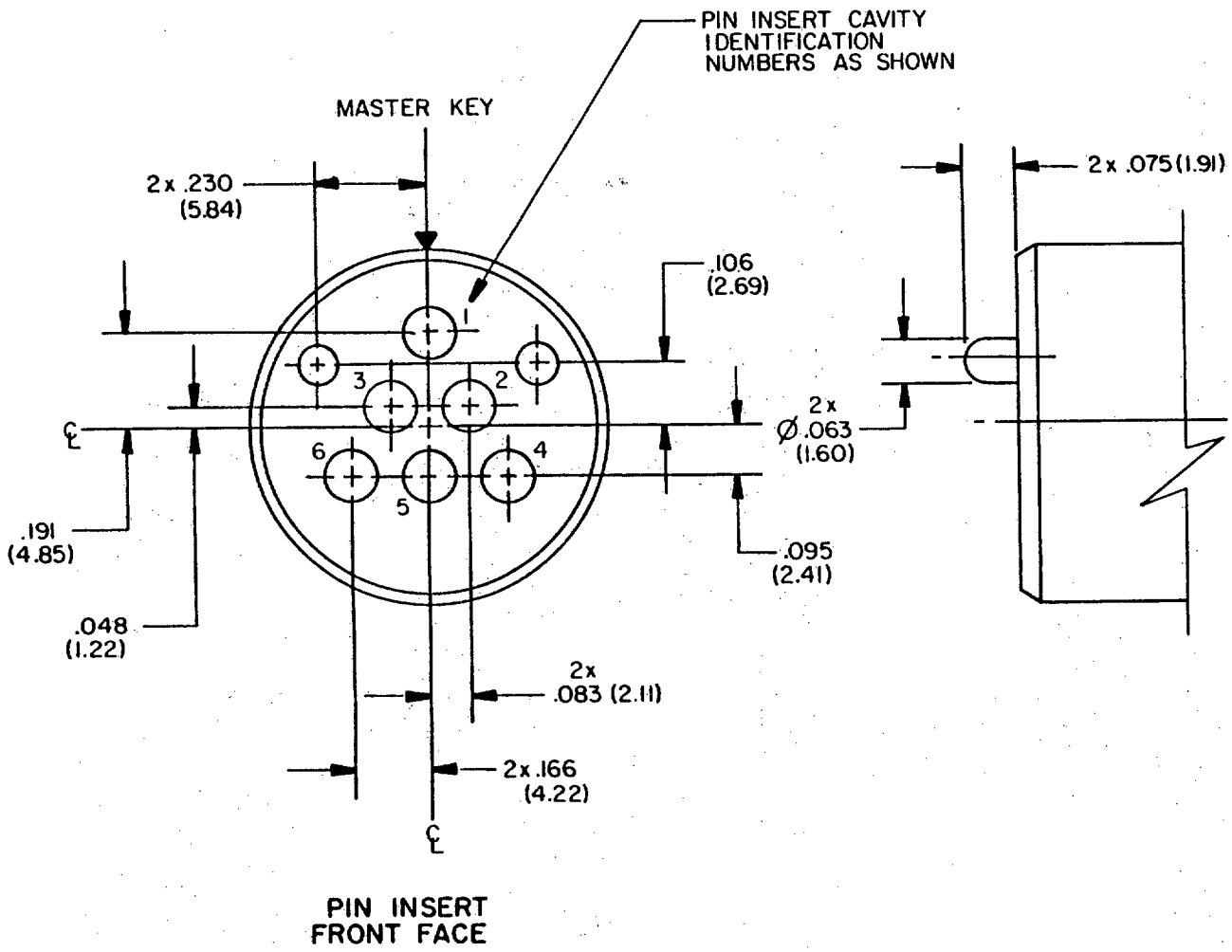


FIGURE 3. Six-position termini arrangement for shell size 15.



Source: https://assist.dla.mil -- Downloaded: 2016-12-10T08:23Z
Check the source to verify that this is the current version before use.

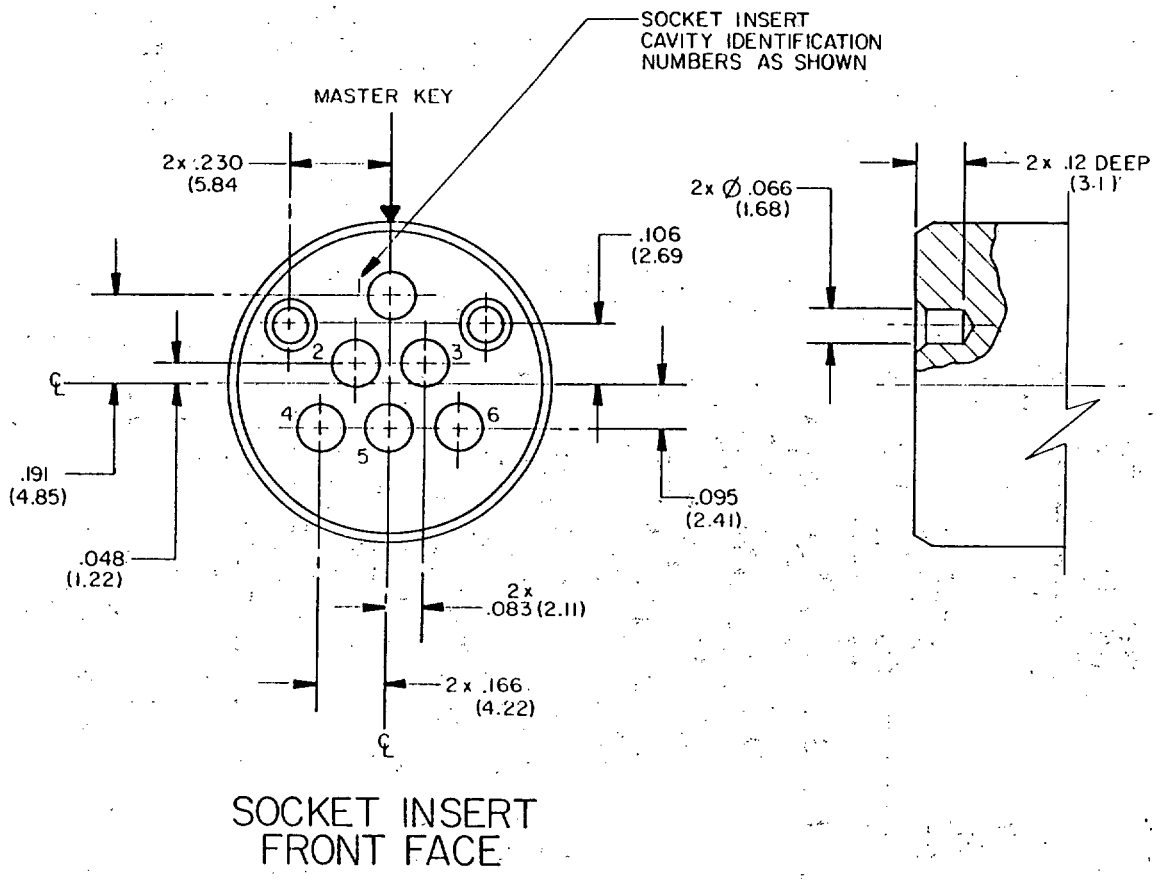


| Shell size | Shell size designator | Arrangement number | Number of termini | Termini size |
|---|---|---|---|---|
| 15 | C | 2 | 6 | 16 |

NOTES:
1. Dimensions are in inches.
2. Metric equivalents are given for general information only.
3. Metric equivalents are in parentheses.

FIGURE 3. Six-position termini arrangement for shell size 15 - Continued.



Source: https://assist.dla.mil -- Downloaded: 2016-12-10T08:23Z
Check the source to verify that this is the current version before use.

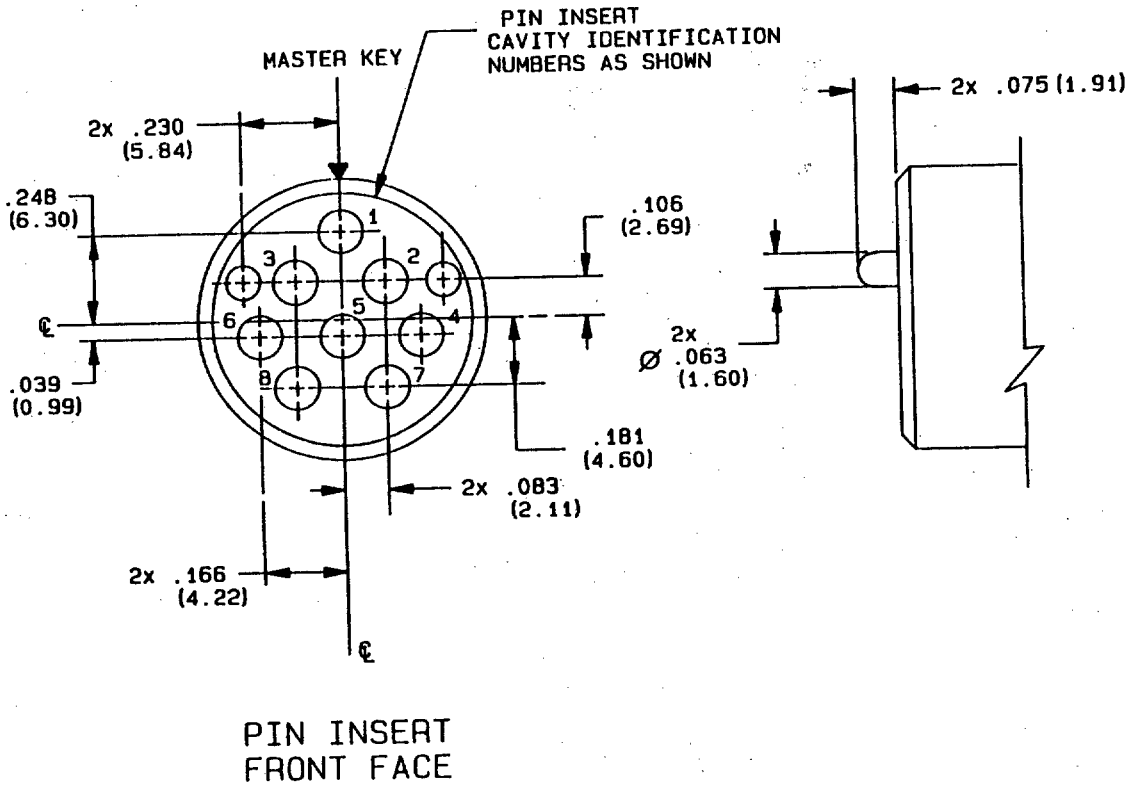


FIGURE 4. Eight-position termini arrangement for shell size 15.



Source: https://assist.dla.mil -- Downloaded: 2016-12-10T08:23Z
Check the source to verify that this is the current version before use.

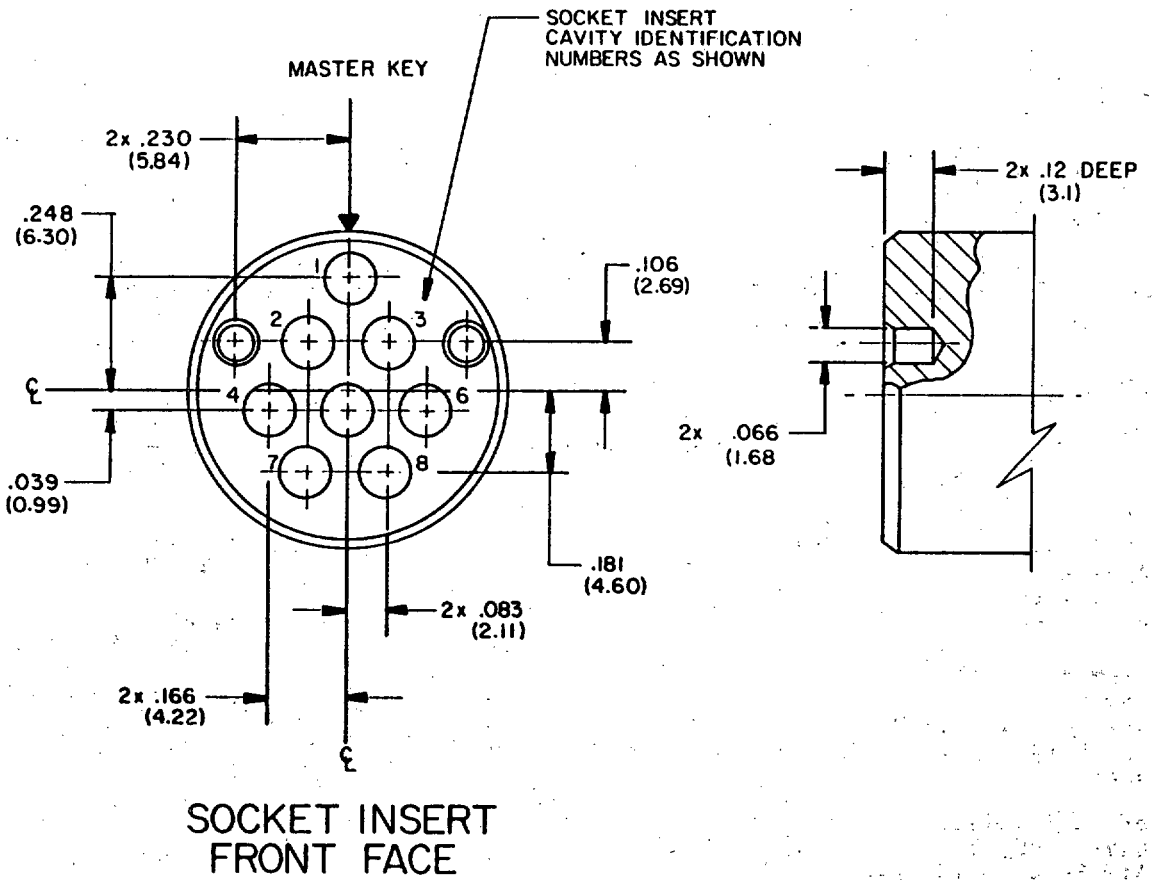


| Shell size | Shell size designator | Arrangement number | Number of termini | Termini size |
|---|---|---|---|---|
| 15 | C | 1 | 8 | 16 |

NOTES:
1. Dimensions are in inches.
2. Metric equivalents are given for general information only.
3. Metric equivalents are in parentheses.

FIGURE 4. Eight-position termini arrangement for shell size 15 - Continued.



Source: https://assist.dla.mil -- Downloaded: 2016-12-10T08:23Z
Check the source to verify that this is the current version before use.

## 6. NOTES

(This section contains information of a general or explanatory nature that may be helpful, but is not mandatory.)

6.1 Subject term (keyword) listing.

Cavity
Center
Hole
Key
Pin
Position
Shell
Socket

6.2 Changes from previous issue. Marginal notations are not used in this revision to identify changes with respect to the previous issue due to the extensiveness of the changes.

## CONCLUDING MATERIAL

Custodians:
Army - CR
Navy - EC
Air Force - 85

Review activities:
Army - MI
Navy - AS, MC, SH
Air Force - 11, 17, 19, 71, 80, 90, 99
DLA - ES

User activities:
Navy - OS, YD
Air Force - 13, 14

Preparing activity:
Navy - EC

Agent:
DLA - ES

(Project 6060-0088)



☆U.S. GOVERNMENT PRINTING OFFICE: 1990 - 704-034/30691

Source: https://assist.dla.mil -- Downloaded: 2016-12-10T08:23Z
Check the source to verify that this is the current version before use.

# STANDARDIZATION DOCUMENT IMPROVEMENT PROPOSAL

**INSTRUCTIONS**

1. The preparing activity must complete blocks 1, 2, 3, and 8 In block 1, both the document number and revision letter should be given.
2. The submitter of this form must complete blocks 4, 5, 6, and 7.
3. The preparing activity must provide a reply within 30 days from receipt of the form.

NOTE: This form may not be used to request copies of documents, nor to request waivers, or clarification of requirements on current contracts. Comments submitted on this form do not constitute or imply authorization to waive any portion of the referenced document(s) or to amend contractual requirements.

| I RECOMMEND A CHANGE: | 1. DOCUMENT NUMBER MIL-STD-2163B | 2. DOCUMENT DATE (YYMMDD) |
|---|---|---|

3. DOCUMENT TITLE Insert Arrangements for MIL-C-28876 Connectors, Fiber Optic, Circular, Plug and Receptacle Style, Multiple Removable Termini

4. NATURE OF CHANGE *(Identify paragraph number and include proposed rewrite, if possible. Attach extra sheets as needed.)*

5. REASON FOR RECOMMENDATION

| 6. SUBMITTER | | |
|---|---|---|
| a. NAME *(Last, First, Middle Initial)* | b. ORGANIZATION | |
| c. ADDRESS *(Include Zip Code)* | d. TELEPHONE *(Include Area Code)*<br>(1) Commercial<br>(2) AUTOVON *(If applicable)* | 7. DATE SUBMITTED *(YYMMDD)* |

| 8. PREPARING ACTIVITY | |
|---|---|
| a. NAME | b. TELEPHONE *(Include Area Code)*<br>(1) Commercial (2) AUTOVON |
| c. ADDRESS *(Include Zip Code)* | IF YOU DO NOT RECEIVE A REPLY WITHIN 45 DAYS, CONTACT:<br>Defense Quality and Standardization Office<br>5203 Leesburg Pike, Suite 1403, Falls Church, VA 22041-3466<br>Telephone (703) 756-2340 AUTOVON 289-2340 |

DD Form 1426, OCT 89 *Previous editions are obsolete.* 198-290

Source: https://assist.dla.mil -- Downloaded: 2016-12-10T08:23Z
Check the source to verify that this is the current version before use.