NOT MEASUREMENT SENSITIVE

MIL-HDBK-240A
10 March 2011

SUPERSEDING
MIL-HDBK-240
1 November 2002

DEPARTMENT OF DEFENSE HANDBOOK

HAZARDS OF ELECTROMAGNETIC RADIATION TO ORDNANCE TEST GUIDE

This handbook is for guidance only.
Do not cite this document as a requirement.

AMSC N/A

AREA EMCS

DISTRIBUTION STATEMENT A. Approved for public release; distribution is unlimited.

Source: https://assist.dla.mil -- Downloaded: 2017-02-28T10:07Z
Check the source to verify that this is the current version before use.

FOREWORD

1. This handbook is approved for use by all Departments or Agencies of the Department of Defense (DoD).

2. This handbook was prepared for contractors, DoD test agencies, activities, and test planners. This handbook is for guidance only and cannot be cited as a requirement.

3. This handbook provides recommended practices for conducting Hazards of Electromagnetic Radiation to Ordnance (HERO) evaluations. Developed over many years by DoD test activities, the methods and procedures described herein are the product of the collective DoD HERO test experience. This handbook consolidates these practices into a single document vice numerous individual Service standards, instructions, and so forth, thus promoting a standardized approach.

4. This handbook was prepared by the Services under the sponsorship of the Joint Ordnance Commander's Group HERO Subcommittee in accordance with the guidelines of the Standardization Reform Policy established by the Secretary of Defense.

5. Comments, recommendations, additions, or deletions and any other pertinent data that may improve this document should be emailed to J5@jsc.mil or addressed to:

Defense Information Systems Agency (DISA)
Joint Spectrum Center (JSC)
Attn: JSC/J5 (M. Shellman, Jr.)
2004 Turbot Landing
Annapolis, MD 21402-5064

6. The currency of this address information may be verified by using the ASSIST Online database at https://assist.daps.dla.mil.

Source: https://assist.dla.mil -- Downloaded: 2017-02-28T10:07Z
Check the source to verify that this is the current version before use.

CONTENTS

FIGURE PAGE

FOREWORD ii

1. SCOPE 1

1.1 Purpose 1
1.2 Background 1

2. APPLICABLE DOCUMENTS 2

2.1 General 2
2.2 Government Documents 2
2.2.1 Specifications, Standards, and Handbooks 2
2.2.2 Other Government Documents and Publications 2
2.3 Non-Government Document 4

3. DEFINITIONS 4

3.1 Acronyms 4
3.2 Definitions 6
3.2.1 Dudding 6
3.2.2 Electrically Initiated Device (EID) 6
3.2.3 Electromagnetic Environment (EME) 6
3.2.4 Electromagnetic Environmental Effects (E3) 7
3.2.5 Far-Field Region 7
3.2.6 Near-Field Region 7
3.2.7 Hazards of Electromagnetic Radiation to Ordnance (HERO) 7
3.2.8 HERO Margin 7
3.2.9 HERO SAFE ORDNANCE 8
3.2.10 HERO SUSCEPTIBLE ORDNANCE 8
3.2.11 HERO UNSAFE ORDNANCE 8
3.2.12 Maximum Allowable Environment (MAE) 8
3.2.13 Maximum No-Damage Current (MNDC) 8
3.2.14 Maximum No-Fire Current (MNFC) 8
3.2.15 Maximum No-Fire Stimulus (MNFS) 9
3.2.16 Ordnance 9
3.2.17 Ordnance Configurations 9
3.2.18 Platform-loaded 9
3.2.19 Reliability Consequence 9
3.2.20 Rise Time 9
3.2.21 Safe Separation Distance 9
3.2.22 Safety Consequence 10
3.2.23 Stockpile-to-Safe Separation Sequence (S4) 10
3.2.24 System Under Test (SUT) Operating Frequencies 13
3.2.25 Thermal Stacking 13

Source: https://assist.dla.mil -- Downloaded: 2017-02-28T10:07Z
Check the source to verify that this is the current version before use.

CONTENTS

FIGURE PAGE

4. HERO OVERVIEW 14
4.1 The Need for HERO Control 14
4.2 Approaches to Addressing the HERO Problem 15
4.2.1 Commonality 15
4.2.2 Program Responsibilities 15
4.3 HERO Assessments 17
4.3.1 Analyses 17
4.3.2 Test Approaches/Procedures 18
4.4 Data Repositories 19
4.5 Risk Assessment/Management 20
4.5.1 HERO EMCON Bills 20
4.5.2 JOERAD 20
5. TEST PLANNING 21
5.1 Overview 21
5.2 Ordnance Documentation 21
5.2.1 Mission 21
5.2.2 Ordnance Description 21
5.2.3 Associated Equipment 22
5.2.4 S4 Description 23
5.3 Pre-test Assessment 23
5.3.1 EID Description and Characteristics 23
5.3.2 Evaluation of RF-Protective Features and Weaknesses 29
5.3.3 Firing Systems 30
5.3.4 Multiple Platform/System Analysis 34
5.3.5 Response Prediction 34
5.4 Test Configuration 36
5.4.1 Physical Configurations 36
5.4.2 Operating Procedures 40
5.4.3 Expected EME 41
5.5 Test EME Levels 41
5.5.1 EME Parameters 41
5.6 EID Instrumentation 46
5.6.1 Instrumentation Characteristics 46
5.6.2 Types of Instrumentation 48
5.6.3 Bridgewire EIDs and Ordnance Instrumentation 52
5.6.4 Instrumentation/Monitoring Firing Circuits and Electronic Devices 53
5.6.5 Non-Instrumented Testing (Go/No-Go Type) 54
6. CONDUCTING THE TEST 55
6.1 Introduction 55
6.2 Safety 55
6.2.1 Standard Operating Procedure (SOP) 55

Source: https://assist.dla.mil -- Downloaded: 2017-02-28T10:07Z
Check the source to verify that this is the current version before use.

CONTENTS

FIGURE PAGE

6.2.2 Safety Briefings....55
6.2.3 Ordnance Handling....56
6.2.4 Maximum Permissible Exposure (MPE)....56
6.2.5 Compliance with MPEs....58
6.2.6 Operations Involving Host Platforms and Ancillary Equipment....58
6.2.7 Personal Protective Equipment (PPE)....58
6.3 Generating Test EMEs....59
6.3.1 HF Environment (2-30 MHz)....59
6.3.2 VHF Environment (30-225 MHz)....69
6.3.3 Frequencies Above 225 MHz....72
6.4 Maximizing Responses....75
6.4.1 Illumination Angles....75
6.4.2 Frequency Increments....75
6.4.3 Stimulus Dwell Time....75
6.4.4 Communications....76
6.5 Non-Linear Effects....76
6.5.1 RF Arcing....76
6.5.2 Energized Circuit Susceptibility....77
6.6 Susceptibility Investigation....78
6.6.1 Identifying POEs....78
6.6.2 Fix Development and Verification....78

7. DATA ANALYSIS....78

7.1 Introduction....78
7.2 Detected Responses....79
7.3 Undetected Responses....79
7.4 Pass/Fail Criteria (Required Margins)....79
7.4.1 Firing Consequence Factors (FCFs)....79
7.5 Conversion to EID Response at Criteria EME Level....80
7.5.1 Determination of Pass/Fail....80
7.5.2 Determination of P/FM....80
7.6 Conversion to MAE....81
7.6.1 Extrapolation Limits....81
7.7 Determination of MAE per Frequency Band....82

8. DOCUMENTATION....83

8.1 Introduction....83
8.2 Purpose of Test Documentation....83

9. NOTES....84

9.1 Intended Use....84
9.2 Supersession Data....84
9.3 Cross-Reference of Classifications and Substitutability Data....84

Source: https://assist.dla.mil -- Downloaded: 2017-02-28T10:07Z
Check the source to verify that this is the current version before use.

CONTENTS

FIGURE PAGE

9.4 Subject Term (Keyword) Listing 84
9.5 Identification of Changes 84
9.6 Technical Points of Contact 85
A.1 Introduction 86
A.2 Test Plan 86
A.2.1 Main Body Sections 86
A.2.2 Appendices 87
A.2.3 Test Plan Contents 87
A.3 Test Report 93
A.3.1 Main Body Sections 93
A.3.2 Test Report Contents 94
A.3.3 Main Body Sections 94

CONCLUDING MATERIAL 97

FIGURE PAGE

1 Transportation/storage phase 10
2 Assembly/disassembly stage 11
3 Staged phase 11
4 Handling/loading phase 12
5 Platform-loaded phase 12
6 Immediate post-launch phase 13
7 Ordnance stockpile-to-safe separation sequence (S4) 19
8 Illustration of thermal stacking of MK 1 squib during 9 GHz radar test 27
9 Typical HBW firing circuit with an S&A device 30
10 Differential mode of RF excitation in a two-wire firing system 31
11 Coaxial mode RF excitation in a coaxial firing system 32
12 Coaxial mode RF excitation in a two-wire firing system 33
13 VHF and radar illumination angles 45
14 Metal-junction thermocouple instrumentation for bridgewire-type EIDs 48
15 Typical optical sensor instrumentation for bridgewire-type EIDs 49
16 Bridgewire-type EID instrumented with a metal-junction thermocouple 50
17 Bridgewire-type EID instrumented with an optical thermocouple 50
18 Vacuum thermocouple/simulated bridgewire-type EID 51
19 Radiated MPEs for restricted environments 57
20 EME transmission equipment and antennas block diagram 60
21 Far-field distance for HF monopole 62
22 HF field calibration technique 63
23 Helicopter in nose-on orientation from 35-foot HF antenna 64
24a RF current-ground for aircraft in nose-on orientation 66
24b RF current-ground for aircraft in tail-on orientation 66
24c Aircraft-to-ground RF voltages (nose-on orientation) 67
24d Aircraft-to-ground RF voltages (tail-on orientation) 68

Source: https://assist.dla.mil -- Downloaded: 2017-02-28T10:07Z
Check the source to verify that this is the current version before use.

CONTENTS

FIGURE		PAGE
25	Voltage-ground measurement setup	68
26	VHF range calibration technique	70
27	Illumination of test item at VHF frequencies	71
28	Field calibration technique above 225 MHz	74
29	RF arc generated during HERO testing	77

TABLE		PAGE
I	DoD commands concerned with HERO	16
II	EID identification/characteristics	24
III	Typical EID characteristics	25
IV	Representative ordnance test frequencies	42
V	HERO test EME levels	44
VI	Radiated MPEs for restricted environments	56
VII	I/CC restrictions	58
VIII	MAE extrapolation limits	82
A-I	EID identification/characteristics	92
A-II	Sample test results sheet format	96

Source: https://assist.dla.mil -- Downloaded: 2017-02-28T10:07Z
Check the source to verify that this is the current version before use.

This page intentionally left blank.

Source: https://assist.dla.mil -- Downloaded: 2017-02-28T10:07Z
Check the source to verify that this is the current version before use.

1. SCOPE

1.1 Purpose

This handbook supplements MIL-STD-464 by providing guidance for the assessment of the Hazards of Electromagnetic Radiation to Ordnance (HERO) verification margins in that standard. It is concerned with HERO testing for all Air Force, Army, Navy, Marine Corps, and Coast Guard ordnance items and support equipment for all mission areas. Although intended primarily for use by Department of Defense (DoD) HERO test activities, the handbook also provides a consolidation of "corporate knowledge" about the subject that should be of interest to procurement authorities and system developers.

This handbook is for guidance only and cannot be cited as a requirement.

1.2 Background

There are four specific objectives of this handbook:

a. Document HERO Joint-Service test methodology,
b. Promote test standardization,
c. Identify alternative techniques and instrumentation, and
d. Facilitate the exchange of HERO test data.

Ultimately, HERO test data are used to determine the maximum allowable environment (MAE) for ordnance and weapon systems containing electrically initiated devices (EIDs). MAE information is used to assess HERO risks and develop effective control measures to minimize those risks.

HERO assessments are essentially a determination of how EIDs respond to the EME that could be encountered by the ordnance throughout its service life. The response can be influenced by three principal factors: (1) EME characteristics, (2) physical configuration(s) of the ordnance, and (3) handling procedures. Each factor should be considered in the context of the stockpile-to safe separation sequence (S4); that is, from the time the ordnance item is manufactured until it is at a safe post-launch location or in a safe post-deployment configuration.

When defining the operational EME, one should anticipate not only the individual Service EME, but also the EME in Joint-operation scenarios. JROCM 102-05, states that "Because all weapons/weapon systems have the potential of being deployed together or employed in joint environments, weapons and weapon systems will be considered joint systems within the JCIDS process unless they are assigned the Joint Potential Designator of 'Independent.'" As Joint operations become more commonplace, there is an increased likelihood that weapons from one Service will be exposed to other Services' EME levels. MIL-STD-464 specifies the EME levels for HERO certification.

Source: https://assist.dla.mil -- Downloaded: 2017-02-28T10:07Z
Check the source to verify that this is the current version before use.

2. APPLICABLE DOCUMENTS

2.1 General

The following documents and publications form a part of this handbook to the extent specified herein. These documents are the most relevant to fully understand the information provided by this handbook.

2.2 Government Documents

2.2.1 Specifications, Standards, and Handbooks

The following documents form a part of this handbook to the extent specified herein.

DEPARTMENT OF DEFENSE

MIL-DTL-23659	-	Detail Specification, Initiators, Electric, General Design Specification
MIL-HDBK-235-1	-	Military Operational Electromagnetic Environment Profiles, General Guidance
MIL-HDBK-235-7	-	External Electromagnetic Environment Levels for Ordnance
MIL-STD-331	-	Fuze and Fuze Components, Environmental and Performance Tests for
MIL-STD-461	-	Requirements for the Control of Electromagnetic Interference Characteristics of Subsystems and Equipment
MIL-STD-464	-	Electromagnetic Environmental Effects, Requirements for Systems
MIL-STD-1316	-	Fuze Design, Safety Criteria for
MIL-STD-1377	-	Effectiveness of Cable, Connector, and Weapon Enclosure Shielding and Filters in Precluding Hazards of Electromagnetic Radiation to Ordnance; Measurement

(Copies of these documents are available online at: https://assist.daps.dla.mil/quicksearch/ from the Standardization Document Order Desk, 700 Robbins Avenue, Building 4D, Philadelphia, PA 19111-5094.) For copies of MIL-HDBK-235-7, see Foreword of MIL-HDBK-235-1C.

2.2.2 Other Government Documents and Publications

The following Government publications form a part of this document to the extent specified herein.

Source: https://assist.dla.mil -- Downloaded: 2017-02-28T10:07Z
Check the source to verify that this is the current version before use.

DEPARTMENT OF DEFENSE

AD 1115	-	Electromagnetic Compatibility Design Guide for Avionics and Related Ground Support Equipment
ADS-37A-PRF	-	Aeronautical Design Standard, E3 Performance and Verification Requirements (Aviation and Missile Command Report)
DoD 6055.9-STD	-	DoD Ammunition and Explosives Safety Standards
DoDI 6055.11	-	Protecting Personnel From Electromagnetic Fields
Joint Requirements Oversight Council Memorandum (JROCM) 102-05, 20 May 2005	-	Safe Weapons in Joint Warfighting Environments
Joint Chiefs of Staff (JCS) Pub. No.1-02	-	Department of Defense Dictionary of Military and Associated Terms
NAVSEA OD 30393	-	Design Principles and Practices for Controlling Hazards of Electromagnetic Radiation to Ordnance
NAVSEA OP-3565/ NAVAIR 16-1-529/ SPAWAR 0967-LP-624-6010	-	Volume I - Technical Manual, Electromagnetic Radiation Hazards (Hazards to Personnel, Fuel, and other Flammable Material) Volume II - Technical Manual, Electromagnetic Radiation Hazards (Hazards to Ordnance)
TOP 1-2-511	-	Electromagnetic Environmental Effects System Testing (Army Development Test Command)
TR-RD-TE-97-01	-	EM Effects Criteria and Guidelines for EMRH, EMRO, Lightning Effects, ESD, EMP and EMI Testing of US Army Missile Systems (Redstone Technical Test Center Report)

(Copies of the directive, instruction, and Joint Pub are available from the Document Automation and Production Service, Building 4/D, 700 Robbins Avenue, Philadelphia, PA 19111-5094. If you have any questions, please contact the appropriate ASSIST-Help Desk team: Account/Password Issues: 215-697-6396 [DSN: 442-6396]. Copies of NAVSEA documents are available as follows: for DoD agencies and contractors, contact the Director, Naval Surface Warfare Center, Attn: E421, Indian Head Division Detachment Earle, 201 Highway 34 South, Colts Neck, NJ 07722-5023; for all others contact the Commander, Naval Sea Systems Command, Attn: SEA 53H3, 1333 Isaac Hull Ave., SE, Washington, DC 20376-1080. Copies of OP 3565 Volume 2 are available from the Colts Neck address listed above.) Copies of ADS-37A-PRF are available from the Army Aviation and Missile Command, ATTN: RDMR-AES, Bldg. 4488, Redstone Arsenal, AL 35898. Copies of TOP 1-2-511 are available from Developmental Test Command, Aberdeen Test Center, Vision Data Library; https://vdls.atc.army.mil/.) Copies of TR-RD-TE-97-01 are available from the U.S. Army Redstone Test Center, ATTN: TEDT-RT-EME, Bldg. 8978, Redstone Arsenal, AL 35898-8052.

Source: https://assist.dla.mil -- Downloaded: 2017-02-28T10:07Z
Check the source to verify that this is the current version before use.

Many of the aforementioned documents also are available at the DISA/JSC E3 Document Library at this link on the Defense Acquisition University (DAU) website: https://acc.dau.mil/library.

2.3 Non-Government Document

The following document forms a part of this document to the extent specified herein.

AMERICAN NATIONAL STANDARDS INSTITUTE (ANSI)

ANSI/IEEE C63.14	-	Dictionary of Electromagnetic Compatibility (EMC) including Electromagnetic Environmental Effects (E3)
ANSI/IEEE C95.1	-	Standard for Safety Levels with Respect to Human Exposure to Radio Frequency Electromagnetic Fields, 3 kHz to 300 GHz
ANSI/IEEE C95.6	-	Standard for Safety Levels with Respect to Human Exposure to Electromagnetic Fields, 0 – 3 kHz

(Copies of this document are available from Institute of Electrical and Electronics Engineers (IEEE) on http://www.ieee.org or IEEE Contact Center, 445 Hoes Lane, Piscataway, NJ 08854-1331) or 1-800-678-IEEE.

3. DEFINITIONS

3.1 Acronyms

The acronyms used in this handbook are defined as follows:

A/m	-	amperes per meter
ac	-	Alternating Current
ADS	-	Aeronautical Design Standard
af	-	Audio Frequency
AFB	-	Air Force Base
AM	-	Amplitude Modulation
ANSI	-	American National Standards Institute
AUR	-	All-Up Round
BW	-	Bridgewire
CW	-	Continuous Wave
dB	-	Decibel
dc	-	Direct Current
DID	-	Data Item Description
DISA/JSC		Defense Information Systems Agency/Joint Spectrum Center
DoD	-	Department of Defense
DoDI	-	Department of Defense Instruction
DoDIC	-	Department of Defense Identification Code

Source: https://assist.dla.mil -- Downloaded: 2017-02-28T10:07Z
Check the source to verify that this is the current version before use.

E3	-	Electromagnetic Environmental Effects
EBW	-	Exploding Bridgewire
EC	-	Equipment Characteristics
EFI	-	Exploding Foil Initiator
EID	-	Electrically Initiated Device
EM	-	Electromagnetic
EMC	-	Electromagnetic Compatibility
EMCON	-	Emission Control
EME	-	Electromagnetic Environment
EMI	-	Electromagnetic Interference
EMP	-	Electromagnetic Pulse
EMRH	-	Electromagnetic Radiation Hazards
EMRO	-	Electromagnetic Radiation Operational
EMV	-	Electromagnetic Vulnerability
ESD	-	Electrostatic Discharge
FCF	-	Firing Consequence Factor
FM	-	Frequency Modulation
HBW	-	Hot Bridgewire
HERO	-	Hazards of Electromagnetic Radiation to Ordnance
HF	-	High Frequency
I/CC	-	Induced/Contact Current
IEEE	-	Institute of Electrical and Electronics Engineers
JOERAD	-	Joint Spectrum Center Ordnance E3 Risk Assessment Database
MAE	-	Maximum Allowable Environment
MDC	-	Minimum Detectable Current
MF	-	Multiplying Factor
MNFC	-	Maximum No-Fire Current
MNFP	-	Maximum No-Fire Power
MNFS	-	Maximum No-Fire Stimulus
MPE	-	Maximum Permissible Exposure
mW/cm^2	-	milliwatts per centimeter squared
NALC	-	Navy Ammunition Logistic Code
NAVAIR	-	Naval Air Systems Command
NAVSEA	-	Naval Sea Systems Command
NOSSA	-	Naval Ordnance Safety and Security Activity
NSN	-	National Stock Number
P/FM	-	Pass/Fail Margin
P/N	-	Part Number
PM	-	Pulse Modulation
POE	-	Point of Entry
PPE	-	Personal Protective Equipment
PRF	-	Pulse Repetition Frequency
RF	-	Radio Frequency
S&A	-	Safe & Arm
SOP	-	Standard Operating Procedure
SPAWAR	-	Space and Naval Warfare Systems Command

Source: https://assist.dla.mil -- Downloaded: 2017-02-28T10:07Z
Check the source to verify that this is the current version before use.

SUT	-	System Under Test
S4	-	Stockpile-to-Safe Separation Sequence
T/S	-	Transportation/Storage
TOP	-	Test Operations Procedure
UHF	-	Ultra High Frequency
V/m	-	Volts per meter
VHF	-	Very High Frequency
µsec	-	microsecond

3.2 Definitions

Many of the terms in this handbook are defined in Joint Publication 1-02, MIL-STD-464, MIL-HDBK-237, DoDI 6055.11, and ANSI/IEEE C63.14. The definitions given below are either not found in the referenced publications, or have been included and in some cases expanded from the referenced publication for the convenience of the user or to make them specific to this handbook.

3.2.1 Dudding

The inability of the EID to function as intended because the physical/electrical properties have been altered due to the application or repeated application of energy below that required to initiate the device.

3.2.2 Electrically Initiated Device (EID)

An EID is a single unit, device, or subassembly that uses electrical energy to produce an explosive, pyrotechnic, thermal, or mechanical output. Examples include electroexplosive devices such as hot bridgewire (HBW), semiconductor bridge, carbon bridge, and conductive composition, as well as exploding foil initiators (EFIs), laser initiators, burn wires, and fusible links.

3.2.3 Electromagnetic Environment (EME)

EME is the resulting product of the power and time distribution, in various frequency ranges, of the radiated or conducted electromagnetic emission levels that may be encountered by a military force, system, or platform when performing its assigned mission in its intended operational environment (in the case of ordnance, during its S4). It is dynamically comprised of electromagnetic energy from a multitude of natural sources (lightning, precipitation static (p-static), electrostatic discharge (ESD), galactic and stellar noise, and so forth) and man-made sources (electrical and electronic systems, radio frequency (RF) systems, electromagnetic devices, ultra-wideband (UWB) systems, high-power microwaves (HPM) systems, and so forth). When defined, the EME will be for a particular time and place. Specific equipment characteristics, such as operating frequencies and emitter power levels, operational factors, such as distances between items and force structure and frequency coordination, all contribute to the EME.

Source: https://assist.dla.mil -- Downloaded: 2017-02-28T10:07Z
Check the source to verify that this is the current version before use.

3.2.4 Electromagnetic Environmental Effects (E3)

E3 is the impact of the EME upon the operational capability of military forces, equipment, systems, and platform/systems. It encompasses all electromagnetic disciplines, including electromagnetic compatibility (EMC); electromagnetic interference (EMI); electromagnetic vulnerability (EMV); electromagnetic pulse (EMP); electronic protection (EP); electrostatic discharge (ESD); and hazards of electromagnetic radiation to personnel (HERP), ordnance (HERO), and volatile materials such as fuel (HERF); and includes the electromagnetic effects generated by all EME contributors including radio frequency (RF) systems; ultra-wideband (UWB) devices; high-power microwaves (HPM) systems; lightning; precipitation static; and so forth.

3.2.5 Far-Field Region

The region of the field of an antenna where the angular field distribution is essentially independent of the distance from the antenna. The electric and magnetic field components are mutually perpendicular to each other and the direction of propagation, and their ratio is 377 Ω, the impedance of free space. The far-field distance generally is recognized as equal to $2D^2/\lambda$, where D is the largest dimension of the antenna and λ is the wavelength of the radiating energy.

3.2.6 Near-Field Region

The reactive region immediately surrounding the antenna, wherein the reactive field dominates, and a radiating region where the angular field distribution is dependent on the distance from the antenna. The near-field region is typically more complex than the far-field region. In the near field, coupling to an ordnance item is expected to be influenced by the type of radiating antenna and the proximity to that antenna. If the antenna has a maximum overall dimension that is not large compared to wavelength, then this region may not exist.

3.2.7 Hazards of Electromagnetic Radiation to Ordnance (HERO)

The situations in which exposure of ordnance to external EMEs results in specified safety or reliability margins of EIDs or electrically powered ordnance firing circuits to be exceeded, or EIDs to be inadvertently actuated. External EMEs may originate from intentional transmitting sources (for example, radios, radars, electronic countermeasures equipment) or unintentional sources (for example, arcing, high current switching transients). Consequences include both safety (premature firing) and reliability (EID dudding or altered functional characteristics) effects.

3.2.8 HERO Margin

The difference between the maximum no-fire stimulus (MNFS) and the permissible EID response level. For EIDs with a safety consequence, the margin is defined in MIL-STD-464 as 16.5 decibels (dB); for EIDs with a reliability consequence, the margin is defined as 6 dB.

Source: https://assist.dla.mil -- Downloaded: 2017-02-28T10:07Z
Check the source to verify that this is the current version before use.

3.2.9 HERO SAFE ORDNANCE

Any ordnance item that is proven by test or analysis to be sufficiently shielded or otherwise so protected that all electrically initiated devices (EIDs) contained by the item are immune to adverse effects (safety or reliability) when the item is employed in the radio frequency environment delineated in MIL-STD-464. The general HERO requirements defined in the hazards from electromagnetic radiation manuals should still be observed. Note: Percussion-initiated ordnance have no HERO requirements.

3.2.10 HERO SUSCEPTIBLE ORDNANCE

Any ordnance item containing electrically initiated devices proven by test or analysis to be adversely affected by radio frequency energy to the point that the safety or reliability of the system is in jeopardy when the system is employed in the radio frequency environment delineated in MIL-STD-464.

3.2.11 HERO UNSAFE ORDNANCE

Any ordnance item containing electrically initiated devices that have not been classified as HERO SAFE or HERO SUSCEPTIBLE ordnance as a result of a HERO analysis or test. Additionally, any ordnance item containing electrically initiated devices (including those previously classified as HERO SAFE or HERO SUSCEPTIBLE ordnance) that has its internal wiring exposed; when tests are being conducted on that item that result in additional electrical connections to the item; when electrically initiated devices having exposed wire leads are present and handled or loaded in any but the tested condition; when the item is being assembled or disassembled; or when such ordnance items are damaged causing exposure of internal wiring or components or destroying engineered HERO protective devices.

3.2.12 Maximum Allowable Environment (MAE)

The highest radiated field strength levels to which ordnance can be exposed without reducing HERO margins.

3.2.13 Maximum No-Damage Current (MNDC)

The MNFS applicable to EFIs that will not result in visible damage or cause an EFI not to fire when subjected to the operational firing pulse from the tactical fireset of more than 0.1% of all EFIs of a given design at a confidence level of 95%.

3.2.14 Maximum No-Fire Current (MNFC)

The MNFS applicable to EIDs whose normal performance is specified in terms of current.

Source: https://assist.dla.mil -- Downloaded: 2017-02-28T10:07Z
Check the source to verify that this is the current version before use.

3.2.15 Maximum No-Fire Stimulus (MNFS)

The greatest firing stimulus that will not cause initiation or degrade an EID of more than 0.1 % of all electric initiators of a given design at a confidence level of 95%. Stimulus refers to electrical parameters such as current, rate of change of current (di/dt), power, voltage, or energy, which are most critical in defining the no-fire performance of the EID.

3.2.16 Ordnance

Explosives, chemicals, pyrotechnics, and similar stores (for example, bombs, guns, ammunitions, flares, smoke, and napalm) carried on an airborne, sea, space, or ground system.

3.2.17 Ordnance Configurations

The physical configurations assumed by the ordnance and its host platform/systems (for example, aircraft, ground vehicles, personnel, and so forth) and associated ancillary equipment throughout the operational S4.

3.2.18 Platform-loaded

That phase of the S4 where the ordnance item or munition is fixed or stationary; for example, not being handled by individuals, and is staged or racked to, installed on, or attached to the host platform with all handling and loading procedures completed. Host platforms include personnel; for example, ordnance that is shoulder-fired, such as the tube-launched, optically tracked, wire-guided or Javelin missiles.

3.2.19 Reliability Consequence

The inadvertent actuation of an EID that does not result in a safety consequence, but degrades system performance; that is, renders the ordnance item either ineffective or unable to function as intended. An example of this would be the RF initiation of a detonator in a fuze whose safe and arm (S&A) device is mechanically out-of-line with the explosive train. Another example of an EID with a reliability consequence is an electrically initiated match in a thermal battery which, when activated, simply initiates the chemical process to stimulate the battery. In addition, the definition has been expanded to include dudding where the system would no longer be reliable.

3.2.20 Rise Time

The time required for the EID bridgewire temperature to increase from 10 to 90 percent of its final value in response to a step-function input current.

3.2.21 Safe Separation Distance

The minimum distance between the host platform/system and the ordnance, beyond which the hazards to the delivery system and its personnel resulting from the functioning of the ordnance are acceptable.

Source: https://assist.dla.mil -- Downloaded: 2017-02-28T10:07Z
Check the source to verify that this is the current version before use.

3.2.22 Safety Consequence

The inadvertent actuation of an EID that creates an immediate catastrophic event with the potential to either destroy equipment or injure personnel, such as the firing of an in-line rocket motor igniter by RF energy or the inadvertent actuation of an EID that increases the probability of a future catastrophic event by removing or otherwise disabling a safety feature of the ordnance item. This, for example, might be caused by the RF initiation of a piston actuator that removes a lock on the S&A rotor of an artillery fuze, thus allowing a sensitive detonator to rotate in-line with the explosive train.

3.2.23 Stockpile-to-Safe Separation Sequence (S4)

The progressive stages (phases) that begin at the time the ordnance is manufactured and continue until it is expended or reaches a safe distance from the launch vehicle/platform/system. (See figures 1 through 7.) This progression is referred to as the S4 and may consist of up to six of the following distinct stages in which varying degrees of susceptibility can result from unique physical configurations or operational EMEs:

a. Transportation/storage - The phase in which the ordnance is packaged, containerized, or otherwise prepared for shipping or stored in an authorized storage facility. This includes transporting of the ordnance.

FIGURE 1. Transportation/storage phase

Source: https://assist.dla.mil -- Downloaded: 2017-02-28T10:07Z
Check the source to verify that this is the current version before use.

b. Assembly/disassembly - The phase involving all operations required for ordnance build-up or breakdown and typically involves personnel.

FIGURE 2. Assembly/disassembly stage

c. Staged - The phase where the ordnance has been prepared for loading and is pre-positioned in a designated staging area.

FIGURE 3. Staged phase

d. Handling/loading - The phase where physical contact is made between the ordnance item and personnel, metal objects or structures during the process of preparing, checking out, performing built-in tests, programming/reprogramming, installing, or attaching the ordnance item to its end-use platform/system; for example, aircraft, launcher, launch

Source: https://assist.dla.mil -- Downloaded: 2017-02-28T10:07Z
Check the source to verify that this is the current version before use.

vehicle, or personnel. These procedures may involve making or breaking electrical connections, opening and closing access panels, removing/installing safety pins, shorting plugs, clips, and dust covers. This configuration also includes all operations required for unloading; that is, removing, disengaging, or repackaging the ordnance item.

FIGURE 4. Handling/loading phase

e. Platform-loaded - The phase where the ordnance item has been installed on or attached to the host platform/system, (for example, aircraft, ground vehicles, personnel, and so forth) and all loading procedures have been completed.

FIGURE 5. Platform-loaded phase

Source: https://assist.dla.mil -- Downloaded: 2017-02-28T10:07Z
Check the source to verify that this is the current version before use.

f. Immediate post-launch - The phase where the ordnance item has been launched from its platform/system, but up to its safe separation distance with regard to the actuation of its explosives, pyrotechnics, or propellants.

FIGURE 6. Immediate post-launch phase

3.2.24 System Under Test (SUT) Operating Frequencies

Frequencies inherent to the operation of the ordnance SUT, such as computer clock frequencies, internal oscillator frequencies, and communication frequencies.

3.2.25 Thermal Stacking

Heating of the bridgewire followed by a relaxation period where some cooling occurs. After several thermal time constants, the temperature of the EID bridgewire reaches an equilibrium condition with some small temperature excursions about the equilibrium point.

Source: https://assist.dla.mil -- Downloaded: 2017-02-28T10:07Z
Check the source to verify that this is the current version before use.

4. HERO OVERVIEW

4.1 The Need for HERO Control

Technological advances have resulted in the proliferation of communication-electronic equipment and the development of higher power equipment that radiate EM energy. These advances, coupled with the trend to utilize more sensitive, low-power electronic circuits in the design of ordnance systems, perpetuate a long-standing hazard. The hazards that result from adverse interactions between the EME and the electrical initiators or initiating systems contained within ordnance systems are referred to in DoD terminology as HERO. The HERO problem arises from a fundamental incompatibility between the EIDs or EID firing circuits contained within the ordnance and the external radiated EME that the ordnance encounters during its S4 progression.

EIDs perform a variety of functions, such as initiating rocket motors, arming and detonating warheads, and ejecting chaff and flares. The HERO problem arises when any of these functions occur unintentionally or prematurely, as a result of exposure to EM energy. There are two potential forms of such unintentional, RF-induced EID response:

a. Activation of the initiating device itself by EM energy coupled directly into the device or upset of an energized firing circuit, resulting in a firing signal erroneously being sent to the EID, and

b. Degradation or dudding of the initiating device by EM energy coupled directly into the device.

In case (a), accidental EID activation can have negative consequences on either safety or performance; that is, reliability. A safety consequence is the inadvertent actuation of an EID that creates an immediate catastrophic event that has the potential to either destroy equipment or injure personnel, such as the firing of an inline rocket motor igniter; or the inadvertent actuation of an EID that increases the probability of a future catastrophic event by removing or otherwise disabling a safety feature of the ordnance item. This, for example, might be caused by the RF initiation of a piston actuator that removes a lock on the S&A rotor of an artillery fuze, thus allowing a sensitive detonator to rotate in-line with the explosive train. Performance degradation can be any condition that does not have safety implications and is referred to as “reliability”. Performance degradation may occur because an EID has been desensitized as a result of multiple low-level exposures, which would prevent it from firing when needed or because it already had been ignited. “Safety” and “reliability” categorizations should be determined by the procuring activity.

The combination of severe EME levels and sensitive, insufficiently protected components/circuits can have disastrous consequences. Although the problem was recognized in the late 1950s, it has persisted even today for three reasons − the proliferation of communication-electronic equipment, the introduction of more powerful emitters, raising operational EME levels, and the use of sensitive electrically initiated systems.

Source: https://assist.dla.mil -- Downloaded: 2017-02-28T10:07Z
Check the source to verify that this is the current version before use.

Today, MIL-STD-464 requires that ordnance be both designed with sufficient protection from the EME and that performance be verified by test or analysis.

4.2 Approaches to Addressing the HERO Problem

Because of the varied experiences with HERO within the Services, it is not surprising that Service-unique approaches have evolved over time to deal with the problem. Besides Service history, other factors have influenced the respective HERO programs, such as the way the Services store, transport, and use ordnance, and the practical options available for minimizing hazards. For example, when operational EME levels exceed susceptibility thresholds, the Services can opt to utilize different risk reduction measures. The Army and Air Force might stipulate a minimum separation distance between the susceptible ordnance and the offending transmitter, whereas, limited space aboard naval platform/systems might leave no other option for the Navy than to impose restrictions on the emissions of the offending transmitter(s); for example, reducing transmitter output power or limiting antenna radiation zones.

4.2.1 Commonality

Despite differences in the way each Service manages HERO problems, there are certain essential elements that are common to all Services' HERO programs. These include the following:

a. A definition of the expected EME levels for all ordnance configurations;

b. Prescribed methods to quantify system degradation (deficiencies);

c. A process to develop and validate effective, practical "fixes" for known EM deficiencies.

This handbook focuses primarily on (b) above. The other elements are addressed in MIL-STD-464, AD 1115, ADS-37A-PRF, NAVSEA OD 30393, and NAVSEA OP-3565/NAVAIR 16-1-529.

The HERO EME levels for design and performance verification are in MIL-STD-464. However, each Service uses somewhat different processes to address HERO. This handbook prescribes recommended methodology and procedures that should be adopted by all test activities concerned with the planning and execution of HERO tests.

4.2.2 Program Responsibilities

There are a number of activities within each Service that are assigned various HERO program responsibilities. These responsibilities include both administrative and technical aspects of the program. Activities with assigned technical roles generally are concerned with determining whether the system design is adequate to satisfy the E3 requirements of MIL-STD-464. This most often is accomplished by Government-controlled tests at Government-operated test facilities. The purpose of certification is to ensure that the ordnance will operate safely within the EME levels anticipated during the service life of the ordnance, and that any susceptibilities are quantified and documented. Table I identifies key Army, Navy, and Air Force activities,

Source: https://assist.dla.mil -- Downloaded: 2017-02-28T10:07Z
Check the source to verify that this is the current version before use.

along with their respective responsibilities in each Service's HERO program. (See MIL-HDBK-237 for additional guidance.)

TABLE I. DoD commands concerned with HERO

Service	Facility	Location	Responsibilities
Army	Army Aviation and Missile Command	Redstone Arsenal, AL	Aircraft
	Redstone Test Center	Redstone Arsenal, AL	Missiles, ground vehicles, and Army rotorcraft
	Army Armament Research, Development and Engineering Center	Picatinny Arsenal, NJ	Fuzes, gun ammunition, mines, simulators, and infantry ordnance
	White Sands Missile Range	White Sands, NM	Missiles, ground vehicles, and unmanned air vehicles
Navy & U.S. Marine Corps	Naval Surface Warfare Center, Dahlgren Division	Dahlgren, VA	All aircraft, ships, and ordnance items
	Naval Ordnance Safety and Security Activity (NOSSA)	Indian Head, MD	HERO Program Manager
Air Force	Air Force SEEK EAGLE Office (AFSEO)	Eglin AFB, FL	Aircraft and ordnance compatibility
	Warner Robins Air Force Base (AFB)	Warner Robins AFB, GA	Rotary wing aircraft
	Wright-Patterson AFB	Wright-Patterson AFB, OH	Fixed-wing aircraft

Source: https://assist.dla.mil -- Downloaded: 2017-02-28T10:07Z
Check the source to verify that this is the current version before use.

4.3 HERO Assessments

The purpose of a HERO test is to determine if exposure of EIDs to specified EME levels will affect the ordnance in an adverse way. As mentioned earlier, there are several types of adverse effects. Unintentional activation of EIDs within the ordnance can result in a hazard or degrade reliability. It is possible that such adverse effects can occur from exposure to EME levels, whether or not power is applied to the firing circuits. The Army historically distinguished the non-energized problem by the acronym Electromagnetic Radiation Hazards (EMRH). On the other hand, if power is applied, firing circuits may experience interference to an extent that erroneous firing commands are issued to the EIDs, historically referred to by the Army as Electromagnetic Radiation Operational (EMRO), to identify this problem. There is also an EMROH (old term) environment that denotes that time just prior to launch where firing circuits are active; at this point, the ground system EME has a 6 dB margin placed on it for safety. It is noted that the term HERO will be used henceforth in this handbook in a comprehensive sense to represent both cases; that is, firing circuits powered or unpowered. Any distinctions between these two cases with respect to test methods, ordnance configurations, ordnance procedures, susceptibility thresholds, and so forth, will be made clear in the context of the discussion.

4.3.1 Analyses

Analysis should play an important role during the design, development, and verification of ordnance. Analysis can be used to assess various aspects of the hardware, such as coupling of specified fields, resonance conditions, potential responses of electroexplosive circuits, and the effectiveness of potential hardening features. For engineering design to be effective, the developer should understand the interaction and response of the hardware in the specified environments. Except in very limited cases, testing is an essential part of the verification process. Present modeling techniques are not able to address all the relevant aspects of a complex coupling situation. For example, most analytical approaches suffer inaccuracies attributed to oversimplified representations of the following:

a. Ordnance physical configuration (exterior shape, aperture details, internal wiring configuration);

b. Incident electromagnetic fields; and

c. EID circuit impedance matching (coupling efficiency).

At the present time, a purely analytical approach for predicting system response is generally the exception because analysis alone generally results in an overly restrictive assessment of margins. In other words, testing should remain an essential element of each Service's HERO program. On the other hand, testing is not without its own problems. One drawback is the practical limitation on the number of samples of parameters that simulate the test environment. For example, there are limits on the number of frequencies that can be used to simulate the operational EME. The result of an inadequate number of frequency samples is a failure to capture the maximum responses or resonant frequencies within a given frequency band. Despite the imperfections of the testing process, it generally is recognized as the preferred means of determining expected system performance within specified EME levels. For example, analytical models can be used

Source: https://assist.dla.mil -- Downloaded: 2017-02-28T10:07Z
Check the source to verify that this is the current version before use.

during test preparation to predict system resonant frequencies, which then can be investigated during the test. Analytical methods generally are used as "first-look" assessments to identify those ordnance configurations, procedures, and EME parameters needing emphasis during testing. In some cases, analyses may amount to a qualification by similarity. Modifications to existing, previously assessed systems may result in negligible HERO impact. However, experience has shown that even minor changes can have unexpected effects and thus testing generally is preferred.

4.3.2 Test Approaches/Procedures

The general approach for HERO testing is to expose inert, instrumented ordnance to a controlled test EME and monitor each EID contained within the ordnance for a possible response. In addition, when active (powered up) firing circuit testing is necessary, the firing circuit should be monitored. Upset to the firing circuit is typically go/no-go in nature. For most EIDs, the response is quantified in terms of the magnitude of RF current induced into the heating element, or bridgewire, of the device. Measured current levels are determined as a function of selected environment parameters and, in some cases, specific test procedures used to exercise the ordnance. A common objective in all HERO testing is to determine the maximum or worst-case response at each test frequency for various ordnance physical configurations. The general approach is to establish a desired test EME level at a selected test frequency and record the EID response as each of several test parameters; for example, illumination angle, polarization, and so forth, are varied. Specific test procedures may vary according to the type of test facility being used; for example, open-air site, mode-stirred chamber, or anechoic chamber. Subsequent sections of this handbook provide details concerning the steps necessary to plan a test, instrument the ordnance item, generate the test environment, conduct the test, and analyze the test results.

HERO testing should emphasize exposure of the ordnance to the EME levels that are associated with each phase of an ordnance item's S4, as defined in 3.2.23. Figure 7 illustrates a typical progression through this sequence. Significant differences in the ordnance item's physical configuration can be expected as the item transitions from one phase to another.

Different physical configurations can be expected to offer different levels of protection. Furthermore, it is likely that the EME associated with each phase will be quite different. For example, the EME levels associated with handling/loading operations are generally less than those encountered during certain other phases, such as transportation/storage. Thus, the potential for a HERO problem is highly dependent on both of these phase-dependent conditions. From a HERO test standpoint, it is especially important to test all unique ordnance configurations. In the past, only three configurations were defined: transportation/storage, handling/loading, and presence; therefore, existing HERO databases only address these three configurations. Data entered into these databases assume the following "mapping" order: transportation/storage data map into the transportation/storage category; assembly/disassembly and loading/unloading data map into the handling/loading category; and staged, platform/system-loaded, and immediate post-launch data map into the presence category.

Source: https://assist.dla.mil -- Downloaded: 2017-02-28T10:07Z
Check the source to verify that this is the current version before use.

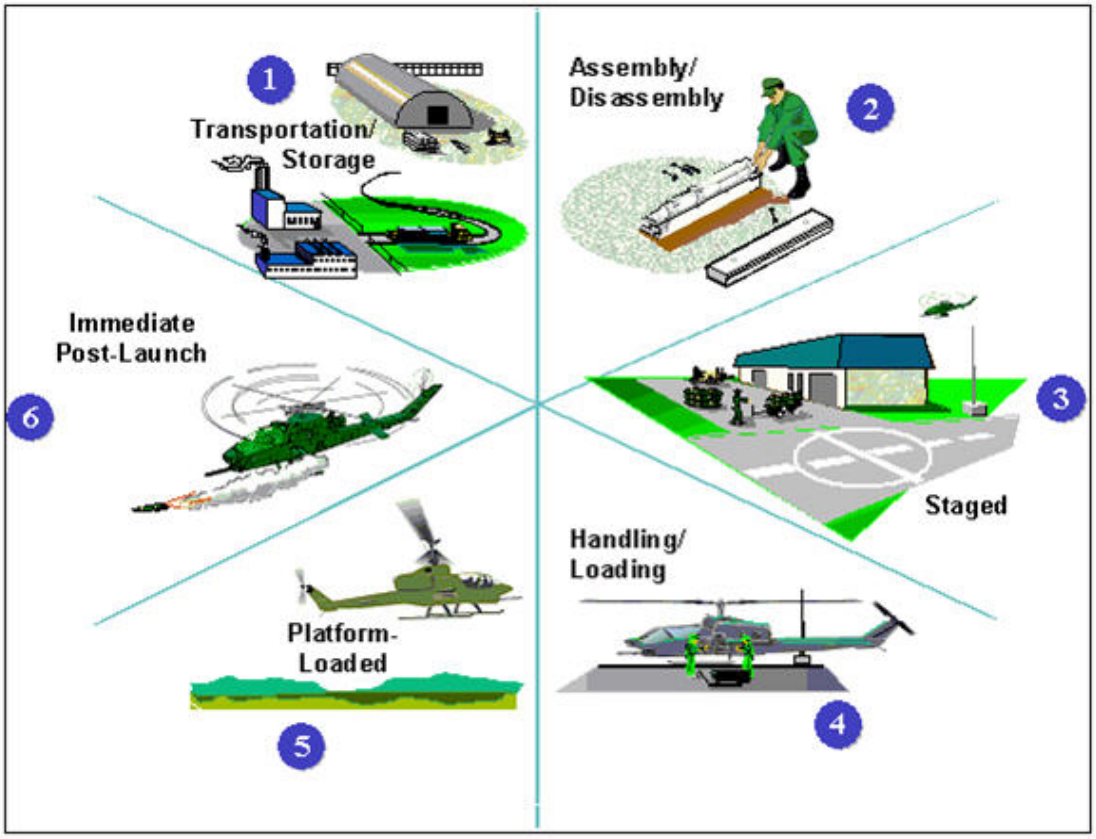

FIGURE 7. Ordnance stockpile-to-safe separation sequence (S4)

4.4 Data Repositories

HERO data are documented in activity test reports, which typically are provided to the individual program office that funded the test. In the case of the Navy, HERO reports initially are provided to the Naval Ordnance Safety and Security Activity (NOSSA). NOSSA reviews the report and, if approved, forwards it to the cognizant program office. There are some notable differences in the way each Service maintains and disseminates HERO data. The Army uses the Developmental Test Command to issue safety releases. The Air Force typically incorporates safety-critical HERO information into individual weapon Technical Manuals, whereas the Navy consolidates all HERO data into a single HERO manual, NAVSEA OP-3565/NAVAIR 16-1-529. HERO test results also are reviewed by the Navy's Weapon System Explosive Safety Review Board as a prerequisite for release for Service use. As a relatively new process, all Services are now required to provide HERO data to the DISA/JSC for entry into a DoD-wide HERO data repository. The DISA/JSC uses these data to populate the Ordnance Module, an element of an extensive program called the JSC Ordnance E3 Risk Assessment Database (JOERAD). (See 4.5.2.)

Source: https://assist.dla.mil -- Downloaded: 2017-02-28T10:07Z
Check the source to verify that this is the current version before use.

4.5 Risk Assessment/Management

New or modified systems, including associated ordnance, are subject to the E3 requirements of MIL-STD-464. There are, however, ordnance items that were introduced into the inventory in the past that were not designed to meet the latest HERO EME levels in MIL-STD-464. In some cases, tests showed that these items did not demonstrate sufficient immunity to the required EME levels; in other cases, no tests were conducted, leaving uncertainty as to the degree of hardness. In such instances, risk assessments are needed to determine what procedures or restrictions will be required to minimize the risk of a HERO accident. In the most basic form, a risk assessment involves comparison of a known or assumed sensitivity, expressed as the MAE, against the expected operational EME. If the EME levels exceed the MAE levels, there is a risk of inadvertent initiation of EIDs, with negative safety or performance consequences. Examples of risk reduction measures include the imposition of emission control (EMCON) or imposing increased separation distances between the offending emitter and the susceptible ordnance to reduce the incident field level. Other protective measures or ordnance handling procedures may be necessary to reduce the susceptibility of the ordnance item.

4.5.1 HERO EMCON Bills

DoD 6055.9-STD requires that HERO EMCON Bills be written for each shore station to specify emitter restrictions when maximum operational EME levels exceed the MAEs for susceptible items at respective ordnance locations. Additionally, the Navy establishes HERO EMCON Bills for all ships. The Navy categorizes all ordnance in terms of the relative immunity; for example, HERO SAFE ORDNANCE being the designation for ordnance that can be exposed safely to EME levels as high as those specified in MIL-STD-464. HERO SUSCEPTIBLE ORDNANCE and HERO UNSAFE ORDNANCE designations are reserved for items that have known susceptibilities, as shown by test or analysis, or for ordnance that have not been certified to the HERO requirements of MIL-STD-464. The HERO EMCON Bill cites each ordnance item that is stored or handled aboard a ship or shore station and any required local emitter restrictions necessary for safe operations.

4.5.2 JOERAD

The DISA/JSC has developed the JOERAD software system to aid in the determination of ordnance safety for any ordnance deployed in any Joint operation. JOERAD has been developed as a tool to aid in the performance of HERO impact assessments, which are used to assist in the management of the conflict between ordnance and emitters employed in a Joint integrated operation or exercise. JOERAD contains the ability to view, query, and maintain stored HERO susceptibility data. In the Susceptibility Module, the HERO information includes identification and administration data of an ordnance item, the EID data associated with threat ordnance, and the MAE for the ordnance in a set of prescribed frequency ranges.

To aid in the risk impact assessment of ordnance, JOERAD also contains the ability to view and query various characteristics of emitters. The Equipment Characteristics (EC) module of JOERAD provides system, component, and antenna parameters and works with the Ordnance Module during impact assessment processing. The EC module is a subset of the data contained in the DISA/JSC Equipment Tactical/Space database, which is maintained by DISA/JSC. The

Source: https://assist.dla.mil -- Downloaded: 2017-02-28T10:07Z
Check the source to verify that this is the current version before use.

complete JOERAD system contains an Impact Analysis module to aid further in the risk assessment process by comparing ordnance MAE data with the emitter data for operational platform/systems.

5. TEST PLANNING

5.1 Overview

MIL-STD-464 establishes E3 interface requirements and verification criteria for systems, including associated ordnance. Both the efficiency with which a HERO verification test is conducted and the quality of the data produced depend largely on the effort that is put into the planning process. Proper test planning requires that certain key information be obtained about the test item. The process begins with a complete identification of the ordnance item, including all components/sub-components, host platform, and all EIDs contained within the ordnance. Additional crucial information includes mission profile, description of the ordnance S4 phases, and the system's physical characteristics. This information then is analyzed to determine how the test should be conducted; for example, which S4 configurations should be tested, what specific procedures are necessary to exercise the ordnance, and what test EME levels should be generated. In essence, the planning phase consists of gathering and evaluating information. An engineering evaluation of the information, with due consideration to test resource constraints, then should be made to develop a plan for accomplishing the test objectives in the most efficient manner. The ensuing paragraphs provide guidance for developing such a plan. (See 8 and Appendix A.)

5.2 Ordnance Documentation

An important step in preparing for a HERO test is to gather certain key information; this is a prerequisite to all other steps in the preparation process. The minimum information needed is detailed below and should be included in the documentation discussed in 8 and Appendix A.

5.2.1 Mission

A description of the mission of the ordnance item is needed to understand how the item will be used throughout its service life and thus becomes the basis for determining appropriate HERO test procedures. This is the basis for selecting which S4 configurations should be tested. Further-more, thorough knowledge of the mission is helpful in selecting the test EME and determining appropriate procedures for exercising the ordnance SUT.

5.2.2 Ordnance Description

Complete identification of the item to be tested is one of the most important, yet often least-emphasized aspects of test preparation. Test results cannot be documented properly nor entered into DoD HERO databases without knowledge of all of the "identifiers." This may include identification at the EID, subsystem and platform/system levels, or some combination thereof. It is essential to have the Department of Defense Identification Code (DoDIC), Navy Ammunition Logistic Code (NALC), military nomenclature (for example, AGM-54, M2), part number (P/N),

Source: https://assist.dla.mil -- Downloaded: 2017-02-28T10:07Z
Check the source to verify that this is the current version before use.

and National Stock Number (NSN). Reference documents, common names, and contract numbers are also helpful information. It is also important to identify all versions of the item for which the test data are applicable. Photographs and physical descriptions provide extremely useful documentation, especially if questions arise concerning which configurations actually were tested.

Associated with most configurations is a host platform/system from which the ordnance is carried or launched. The host platform/system, launcher, if required, and interface cables associated with a particular ordnance item can have a pronounced influence on the response of the EIDs. The ordnance combined with its platform/system configuration is distinctly different from the isolated ordnance item, due to differences in the size, geometry, and interface of the constituent elements. This unique configuration can produce additional and more efficient coupling paths, especially at the lower frequencies where the increased size represents a more effective "antenna." The platform/system, whether it is an aircraft, a shipboard launcher, an armored vehicle, or a person, often determines the first-order resonances of the overall configuration. Assuming that there is a path for energy to couple into the EID, the addition of a host platform/system can alter the distribution of currents in the vicinity of discontinuities on the ordnance enclosure, thereby altering the penetration into the enclosure. It is important that all designated platform/systems be included in the initial assessment. When only one platform/ system can be tested, an analysis should be conducted to determine which platform/system is expected to cause the maximum EID response, and whether conclusions from that test can be applied to other platform/systems. Furthermore, an intra-system analysis or test should be conducted to determine if any of the platform transmitters can radiate the ordnance configurations so as to induce currents into EIDs that exceed HERO pass/fail criteria.

A general physical description should be provided that includes overall dimensions, weight, and materials used; for example, metal, composites, plastics, and so forth.

Part of the identification task involves assuring that the ordnance item to be HERO tested is an accurate representation of the item that will be fielded. HERO tests normally are conducted during Phase III (Production and Deployment) on first article or pre-production hardware. (See 5.4.1.1.1.)

5.2.3 Associated Equipment

Additional equipment, often referred to as ancillary equipment, may be necessary to support HERO testing and should be identified during the planning phase. Such equipment is often necessary to support handling and loading operations. It is important to consider all associated equipment in the planning and evaluation process, and include such equipment since it is likely to influence EID response. Examples include shipping containers, handling equipment, such as cranes, carts, lifts, special tools, and diagnostic/programming equipment. In addition, special test fixtures may be necessary to support the ordnance in a simulated post-launch configuration. (See 5.4.1.3 for additional guidance on the need for and use of ancillary equipment.)

Source: https://assist.dla.mil -- Downloaded: 2017-02-28T10:07Z
Check the source to verify that this is the current version before use.

5.2.4 S4 Description

When planning for a HERO test, it is essential to have a thorough knowledge of how the ordnance will be used throughout its service life or operational life cycle. This life cycle can be thought of in terms of the progressive stages that begin when the ordnance has been delivered to the Government by the manufacturer and continues until it is expended or reaches the safe separation distance from the launch vehicle/platform/system. This progression is referred to as the S4, and is depicted in figures 1-7 and defined in 3.2.23.

An ordnance item may not always have six distinct S4 phases. For instance, when a missile leaves a factory it may be completely assembled prior to delivery to its deploying activity and, therefore, assembly/disassembly procedures are not performed in a high-level EME. Furthermore, from a HERO standpoint, there may not be any significant differences between some phases. Therefore, testing just one phase may be sufficient to characterize the susceptibility of the ordnance system for other phases. It is imperative that the test planner has a thorough understanding of each phase because this will define the three fundamental test parameters required to design the testing program and properly evaluate the ordnance system. The three parameters associated with each phase are the following: the physical configuration of the ordnance system and associated equipment, the specific operating procedures used to exercise the ordnance item, and the EME the ordnance is expected to encounter. These three test parameters should be assessed for possible HERO implications for each phase and determine the impact on test preparation and actual testing. (See 5.4.)

5.3 Pre-test Assessment

It is often possible to predict the effect that certain design features will have on EID response. In addition, the effect of certain ordnance handling procedures is often predictable. Such predictions are valuable when planning which areas to emphasize or de-emphasize during the test. For example, it is important to identify potential points of entry for EM energy. Physical dimensions may be indicative of resonant frequencies and operating procedures that can negate protective design features. Thorough test preparation includes identification of those design features, physical characteristics, and operating procedures that can be expected to influence EID response. The test planner then can make appropriate engineering decisions concerning the test planning with respect to test EME levels, configurations procedures, and so forth. Various software tools may be useful in making such response predictions. Subsequent paragraphs provide further discussion of physical and electrical characteristics relevant in the HERO test planning process, as well as tools available for response prediction.

5.3.1 EID Description and Characteristics

Collection and analysis of EID information is critical to predicting potential susceptibilities and determining instrumentation requirements. In addition to proper EID identification (P/N, NALC, DoDIC, or NSN), the following information should be obtained and evaluated.

Source: https://assist.dla.mil -- Downloaded: 2017-02-28T10:07Z
Check the source to verify that this is the current version before use.

a. Type of EID,
b. Sub-component containing the EID,
c. Firing sensitivity,
d. Bridgewire resistance,
e. Response time,
f. Function within the ordnance, and
g. Firing consequence (safety/reliability).

In addition, RF sensitivity data are useful, if they exist. A table similar to table II should be developed for each EID contained within the ordnance. Subsequent paragraphs provide an explanation of the above parameters and their impact on test preparation.

TABLE II. EID identification/characteristics

Name/ Nomen-clature	NALC DoDIC P/N	Type of EID	Ordnance Subsystem	Function/ Application	MNFS (amps)	BW Resist. (ohms)	Function/ Response Time (ms)	Firing Conseq.
MK 1 MOD 0 Squib	M265	BW	Rocket Motor	Motor Ignition	0.200	2-5	20	Safety

5.3.1.1 Types of EIDs

There are many different types of EIDs used in ordnance. Examples include HBW, exploding bridgewire (EBW), semi-conductor bridge, carbon bridge, conductive composition, exploding foil initiator (EFI), fusible link, and laser-initiated devices. The test planner should understand the characteristics of the different types of EIDs in order to select the best-suited instrumentation and plan appropriately for the test. Table III provides a matrix of the most common EID types, along with some of the inherent characteristics that can impact their EM susceptibility. From the table, it can be seen that a suitable sensor presently is not available for the carbon bridge or conductive composition EIDs. Consequently, evaluation of these devices relies on go/no-go techniques (see 5.6.5). When using temperature sensors with EBWs (non-gapped), EFIs, and fusible links, it will be necessary to establish the minimum fusing or detectable damage current in order to establish the required margins.

EBWs and EFIs require a significant amount of energy (high voltage) to initiate. Through analysis and testing, it is has been determined that the typical DoD EME (peak or average) produced by current operational radar and communication systems cannot initiate these devices through direct coupling. However, it has been demonstrated that these devices may be damaged by the power dissipated in the bridge or foil to the point where they may not initiate when the proper firing signal is applied. Therefore, these devices should be evaluated for performance degradation (reliability) using traditional temperature-sensing techniques. Typically, an EFI is used as the initiating device in Electronic Safe and Arm Devices (ESADs). The electronic circuitry in the ESAD provides both triggering and high-voltage switching functions. Both of these functions are potentially upset by the EME. Therefore, it may be necessary to conduct HERO testing with the circuit powered to detect upset of the triggering function, allowing high-voltage to be discharged across the capacitor/EFI. During HERO testing, both EFI-induced current and firing capacitor voltage should be monitored. Maximum No-Damage Current

Source: https://assist.dla.mil -- Downloaded: 2017-02-28T10:07Z
Check the source to verify that this is the current version before use.

(MNDC) is the manufacturer-furnished characteristic against which the EFI is assessed for degradation. RF-induced firing capacitor voltage is monitored to verify absence of voltage with a potential for RF-induced EFI initiation. The criterion for maximum allowable RF-induced voltage across the ESAD firing capacitor is generally accepted as 15% of the specified firing voltage.

TABLE III. Typical EID characteristics

EID Type	Typical Firing Sensitivity	Typical Response Time	Instrumentation Type
HBW	Moderate to High	5-100 msec	Temperature Sensor
EBW	Low	< 6 μsec	Temperature Sensor
Carbon Bridge	High	< 1 μsec	Not Available
Conductive Composition	High	μsec	Not Available
EFI	Low	< 2 μsec	Temperature Sensor
Fusible Link	Low to Moderate	1-100 sec	Temperature Sensor

5.3.1.2 Firing Sensitivity

EID firing sensitivity is a determination of the threshold initiation point when the EID is subjected to electrical stimuli, either voltage or current, and is described in terms of the MNFS. High sensitivity implies that the device is more sensitive to applied signals than most other devices, while low sensitivity implies that the device is relatively insensitive. The MNFS is determined using one of the following methods:

a. One amp/one watt rating – The EID should not fire within 5 minutes when subjecting the EID to a current of 1 amp minimum per bridge with an associated power of 1 watt minimum per bridge. This applies to each wire of devices having more than one bridgewire.

b. Statistical method – The greatest firing stimulus that does not cause initiation within 5 minutes of more than 0.1 percent of all EIDs of a given design at a confidence level of 95 percent. When determining the MNFS for EIDs with a delay element or with a response time of more than 5 minutes, the firing stimulus should be applied for the time normally necessary for actuation. There are a number of statistical test methods that may be used to determine the EID's MNFS according to the definition above.

The EID manufacturer usually determines the firing sensitivity; however, other commercial companies and military activities are capable of performing the required assessments. It is essential that firing sensitivity data and the method used to determine the MNFS be obtained and analyzed during the planning process.

5.3.1.3 Bridgewire Resistance

EID bridgewire resistance is required for review. Typically, the resistance is given as a range; for example, 4-8 ohms or 1 ± 0.1 ohm. The variation of the resistance for a given EID can have

Source: https://assist.dla.mil -- Downloaded: 2017-02-28T10:07Z
Check the source to verify that this is the current version before use.

a significant impact on the EID and should be considered, especially if there is a wide range of resistance.

5.3.1.4 Response Time, τ

It is important that the EID response time, or time constant, τ, be determined and analyzed with respect to the modulation characteristics of the emitters expected to be encountered by the ordnance and the transmitters used to generate the test EME. This is especially important for EIDs that are very fast responding devices (for example, microseconds) that could respond to peak field strength levels. Notable examples of fast responding EIDs are conductive mix devices, such as 20 mm electric primers.

The response of bridgewire EIDs to a current step input is characterized by an exponential rise in temperature. Response time is defined as the time it takes for the bridgewire temperature (or current) to reach 63 percent of the final (equilibrium) value. (An alternative measure of the time response of an EID is "rise time," the time it takes to change from 10 percent to 90 percent of the final temperature.)

The time that elapses from the application of the firing stimulus until the EID completes its intended function is referred to as the function time of the EID. Function times include both the time to reach the critical firing temperature and the time required for the energetic material to respond to the applied energy.

Typical time constants for bridgewire devices are between 1 and 20 ms. Heating and cooling time constants are similar. EIDs with thermal response times less than or equal to the radar pulse width are referred to as "pulse-sensitive" or "peak power-sensitive" devices. Examples include conducting composition devices, thin film devices, and semiconductor junction devices. As a general rule, tests should be performed using both peak and average field strengths for EMEs with pulse widths equal to or greater than 100 μsec.

5.3.1.5 Thermal Stacking

"Thermal stacking" can occur when multiple radar pulses induce current within the EID's response time. In such cases, the bridgewire temperature can incrementally increase ("stack") with each radar pulse because there is insufficient cooling time between pulses. Figure 8 illustrates this phenomenon.

It is recommended that EID time constants be determined as standard practice. When the thermal time constant of an EID is known, calculations can be made to assess responses for varying emitter parameters. If the response of an EID is known for continuous wave (CW), then a meaningful response figure for a particular pulsed emitter can be obtained by using the following multiplying factor (MF) for peak power in the pulse:

$$MF = \frac{\left(1 - e^{-t_2/\tau}\right)}{\left(1 - e^{-t_1/\tau}\right)}$$

Source: https://assist.dla.mil -- Downloaded: 2017-02-28T10:07Z
Check the source to verify that this is the current version before use.

where:

t_1 = radar pulse width

t_2 = radar pulse interval = 1/PRF (pulse repetition frequency)

τ = EID time constant

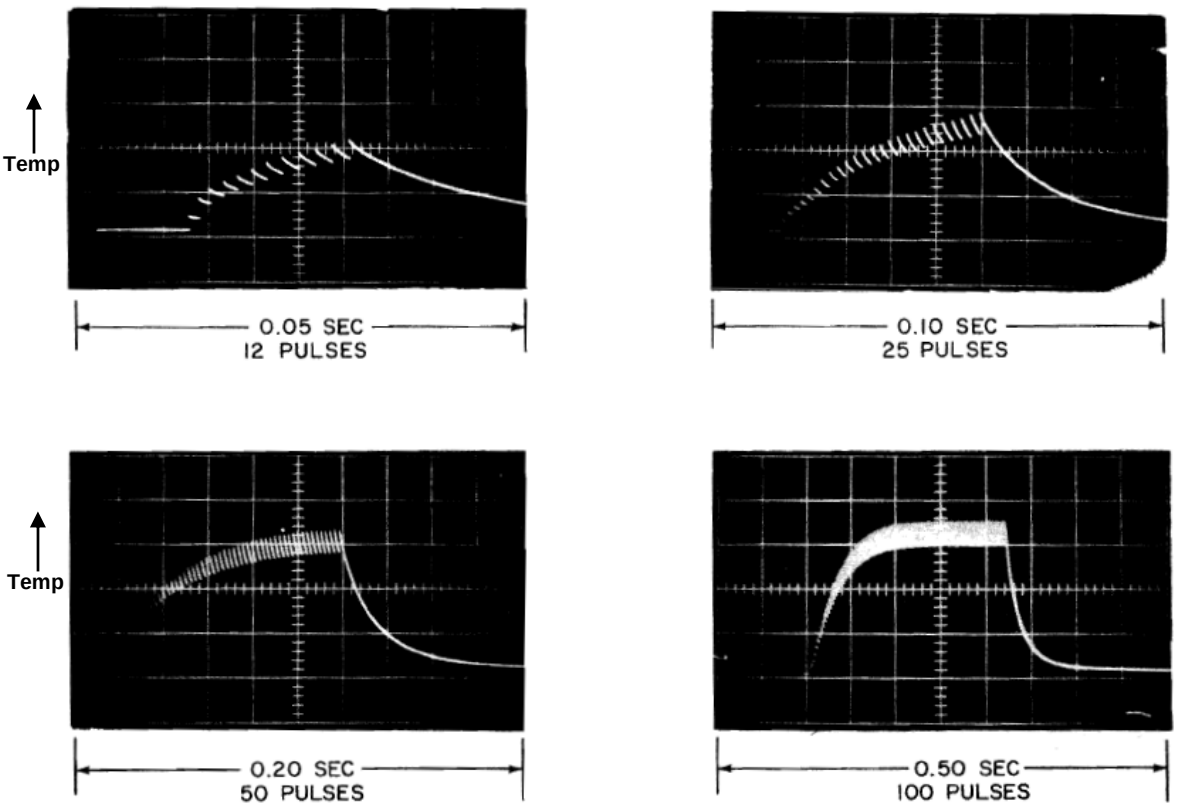

FIGURE 8. Illustration of thermal stacking of MK 1 squib during 9 GHz radar test

For example, assume an EID has a 100 µsec time constant and a maximum no-fire power (MNFP) of 1 watt for CW illumination. For a radar with a 30 µsec pulse width and 1000 µsec pulse interval, the MF is:

$$MF = \frac{\left(1 - e^{-1000/100}\right)}{\left(1 - e^{-30/100}\right)} = 3.86$$

Therefore, the maximum no-fire level for the EID for the radar in the example is 3.86 watts. Similarly, the MF can be used with known responses from radiated fields. If the installed EID is capable of tolerating 100 mW/cm^2 for a CW field, then it is reasonable to assume it can tolerate 386 mW/cm^2 peak power density for the particular radar. Similar calculations can be made to compare peak electric fields, voltages, and currents to CW parameters; however, the square root of MF should be used to obtain correct values. If a 16.5 dB margin exists for the CW field, then the same 16.5 dB margin exists for the calculated pulsed field.

Source: https://assist.dla.mil -- Downloaded: 2017-02-28T10:07Z
Check the source to verify that this is the current version before use.

When the EID time constant is short compared to both the emitter pulse width and pulse interval, the MF approaches one, as expected, indicating that a single emitter pulse has the same effect as CW.

5.3.1.6 EID Function

EIDs may be used to perform a variety of functions within the ordnance. Some EIDs can perform more than one function; therefore, it is important to identify the function within the ordnance item/subcomponent. Examples of EID functions are rocket motor igniters, warhead detonators, explosive switches, cartridge-actuated devices, battery initiators, and cable cutters. In addition, the EID function will have a significant impact on its firing consequence. EIDs of the same type and make may be used in different sections of the ordnance. It is important that the sub-component (for example, fuze, battery, igniter, gyro, and so forth) containing the EID be identified and recorded in the test plan. (See 8 and Appendix A.)

5.3.1.7 Firing Consequence

The actuation of an EID for a given function will have a resulting consequence. For DoD applications, the firing consequence has been divided into two categories: those that will result in system performance degradation (reliability consequence); and those that will result in a hazard to personnel, damage to the system, ancillary equipment, facilities, platform/systems, and so forth, or disable safety features that may lead to a catastrophic event (safety consequence).

During the planning process, it is important that an analysis be performed on each EID of a given application to determine the consequence of inadvertent firing. The analysis should be performed and documented by qualified, explosive-safety personnel. In addition, when examining EID functions and firing consequences, it is essential that the associated firing circuits also be examined to fully understand the operation of the system and the impact on the firing consequence.

S&A circuits play an important role in determining the firing consequence (safety and reliability) of an EID contained in an ordnance system. Therefore, it is essential that the test preparation process include a description and understanding of the S&A concept incorporated into the ordnance system. MIL-STD-1316 requires that S&A devices be designed with safety features that, in most instances, preclude the existence of a safety consequence. One example of a safety consequence is the actuation of an initiator used in an S&A device with an in-line explosive train. However, initiators used in these designs require relatively high voltages to fire these devices so that they should not fire at stimuli below 500 volts. Therefore, direct initiation by EM energy is highly unlikely. However, there is a potential for inadvertent initiation of these devices due to EM energy upset of the trigger circuit. In some instances, an EID that normally is used to remove a safety feature in the immediate post-launch environment will dud the S&A and the ordnance item if it is initiated prematurely.

Source: https://assist.dla.mil -- Downloaded: 2017-02-28T10:07Z
Check the source to verify that this is the current version before use.

5.3.2 Evaluation of RF-Protective Features and Weaknesses

The following paragraphs discuss the design aspects of ordnance that should be considered when defining elements of the HERO test program, including test points. Some ordnance items have extensive protection incorporated into the design, whereas others suffer from an absence of protective features. Notable protective features or the lack thereof, influence the test plan and, ultimately, the testing process.

There are numerous design guides and handbooks that provide much more detailed information on EM protection techniques, as well as engineering data useful in estimating resonant frequencies and identifying potential points of entry, and so forth. These include AD 1115, ADS-37A-PRF, and NAVSEA OD 30393.

5.3.2.1 Enclosures

Enclosure shielding is one of the most important features for the protection of ordnance against incident energy. The test planner should be aware of weaknesses in the enclosure shielding integrity. Enclosure discontinuities such as seams, ports, vents, access panels, rocket motor nozzles, cathode ray tubes, light emitting diodes/liquid crystal displays, or use of composite materials may reduce the overall shielding effectiveness of the enclosure. A good understanding of the shielding design of the ordnance helps the test planner predict potential areas of susceptibility; for example, points of entry, or resonant frequencies. It is important to identify types of materials and their specified and actual shielding effectiveness.

5.3.2.2 Cables and Connectors

Ordnance typically contain both power and signal cables that can act as antennas, particularly when exposed to high frequency (HF), very high frequency (VHF), and ultra high frequency (UHF) EME levels. The test planner should assess the cable shielding design to identify potential strengths and weaknesses. The assessment should take into consideration the length of the cable, type of shield, type of connector, and connector or shield termination. Knowledge of the cable shielding design would help predict whether potential susceptibility problems may occur. In addition, the type of cable termination is extremely important because the effectiveness of shielded cables can be compromised if the shield is not peripherally terminated at the connector. It is noted that direct current (dc) bonding measurements are not an adequate means of determining the shielding effectiveness of the connector/shield termination. MIL-STD-1377 can be used as a guide for testing suspected weaknesses in cable and connector shielding design.

5.3.2.3 EMI Gaskets

Ordnance may contain gaskets where there are shield discontinuities. The test planner should assess the gasket shielding effectiveness with respect to material properties, such as conductivity, compressibility, surface contact area, corrosion, and so forth, as well as installation techniques, compression force, and material properties of the mating surfaces where the gasket will be installed [surface area, conductivity, and surface preparation (paint, chemical coating)].

Source: https://assist.dla.mil -- Downloaded: 2017-02-28T10:07Z
Check the source to verify that this is the current version before use.

5.3.2.4 EMI Filters

EMI filters can be incorporated to protect signal and power lines. The test planner should determine the EMI filter type, either absorptive or reflective, and the electrical characteristics, such as frequency attenuation level and power rating. Such characteristics may indicate a potential for resonance (reflective type filters), or where protection is minimal; that is, frequencies below which no attenuation is provided. Filtering data and the method used to derive the attenuation values should be obtained for analysis. It is noted that insertion loss measurements of individual filters using current test methodologies do not always apply once the filter has been installed in its actual application. In addition, improper installation techniques can also compromise filter effectiveness. RF arcs contain components at all frequencies. Since an EMI filter is designed to preclude only high frequencies from the EME and pass low-frequency firing signals, it is not capable of discriminating between the components of an arc and the intended firing signals. Therefore, special techniques should be employed to provide protection against the HERO problem caused by arcing. In general, there are two methods that are used:

a. Provide open contacts in the firing system between the filter and the EID, or

b. Reduce the RF potential of the mating power contacts to zero prior to the final connection of the firing circuit to the ordnance item.

If either or both of these techniques are followed, the HERO test engineer will have some reasonable assurance that RF arcing will not be a problem.

5.3.3 Firing Systems

For the purposes of this handbook, a firing system consists of a power source, transmission line, and all switching circuits that are required to transfer or control firing energy to an EID. (See figure 9.) Because the firing system provides the path for transferring firing energy to the EID, it also can provide a path for transferring EM energy to the EID. Each element of the firing system's design should be assessed for possible weak links with respect to the overall protection scheme. This is especially true for firing circuits that require an electrical connection external to the ordnance enclosure, as is generally the case.

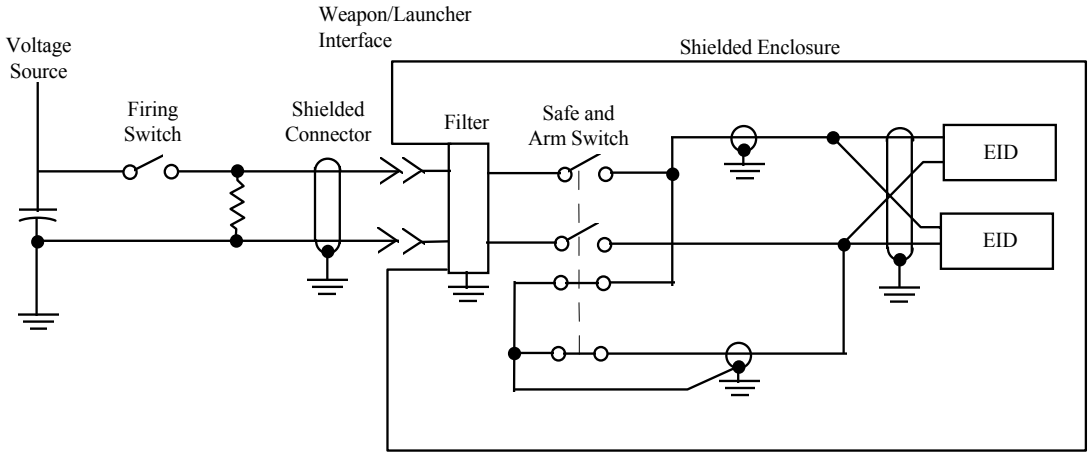

FIGURE 9. Typical HBW firing circuit with an S&A device

Source: https://assist.dla.mil -- Downloaded: 2017-02-28T10:07Z
Check the source to verify that this is the current version before use.

5.3.3.1 Typical EID Circuit Design

There are two modes of unwanted excitation in an EID or its firing circuit, the differential mode and the coaxial mode. In addition, the unwanted signal may be introduced into the ordnance and propagate to the EID through the same path designed for the firing circuit, or it may propagate to the EID through capacitive or inductive coupling via an undesired path, such as a ground loop.

Differential mode RF excitation occurs in two-wire firing circuits. EM energy propagates to the EID or its firing circuit between two wires in the same manner as the normal alternating current (ac) or dc firing current. This will cause joule (resistance) heating of the bridge material, thereby causing inadvertent initiation or dudding of the EID. Figure 10 illustrates the differential mode of excitation. In this mode, it might appear that if a large mismatch of impedance occurs between the EID or its firing circuit input and the transmission line, which is usually the case, most of the EM energy would be reflected at the EID or firing circuit input. Although most of the energy is reflected, enough can be coupled to the EID to cause the bridgewire to heat.

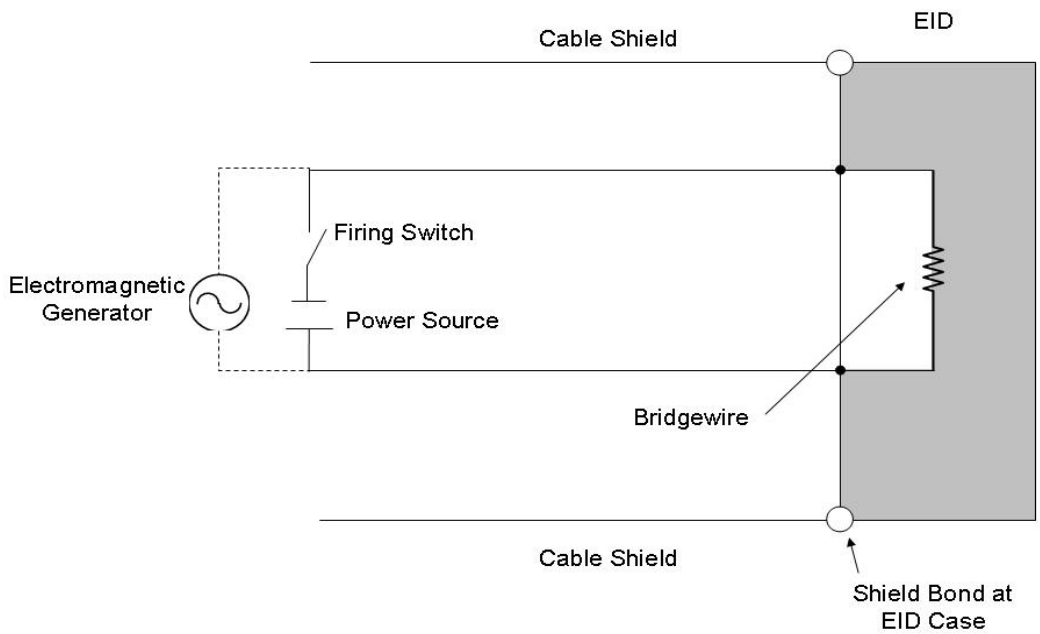

FIGURE 10. Differential mode of RF excitation in a two-wire firing system

In a coaxial firing system, the EM energy propagates to the EID or its firing circuit along one or both legs of the normal ac or dc firing paths. The unwanted signal circuit is completed via a ground loop or capacitive/inductive coupling at the EID. This can be visualized easily by considering a wire or metal rod center conductor contained inside a cylindrical conductor, such as a shield that is concentric with it. (See figure 11.) The EID bridge material is connected at each end to the center and outer conductors. The unwanted signal voltage appears across the EID bridge as a result of an undesired path that occurs between the center and outer conductors, either through a ground loop or a capacitive/inductive coupling. Here again, heat in the bridgewire material is generated by energy just as is the intended ac or dc firing current.

Source: https://assist.dla.mil -- Downloaded: 2017-02-28T10:07Z
Check the source to verify that this is the current version before use.

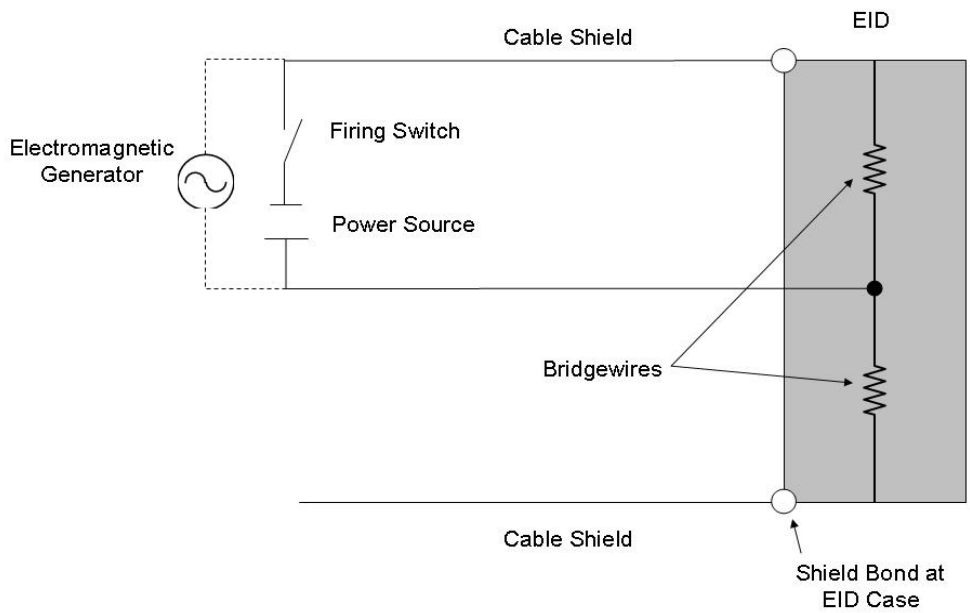

FIGURE 11. Coaxial mode RF excitation in a coaxial firing system

The coaxial mode of RF excitation also can occur when using a two-wire, balanced shielded system through any high-impedance connection in the shield continuity. In this case, the two lead wires serve as the center conductor and the shield serves as the outer one. (See figure 12.) In a two-wire balanced system, energy transferred to the EID in the coaxial mode will cause a high potential to be developed from the bridge through the explosive mix to the EID case. This can cause RF arcs to occur in the explosive mix or can cause dielectric heating of the explosive mix.

Source: https://assist.dla.mil -- Downloaded: 2017-02-28T10:07Z
Check the source to verify that this is the current version before use.

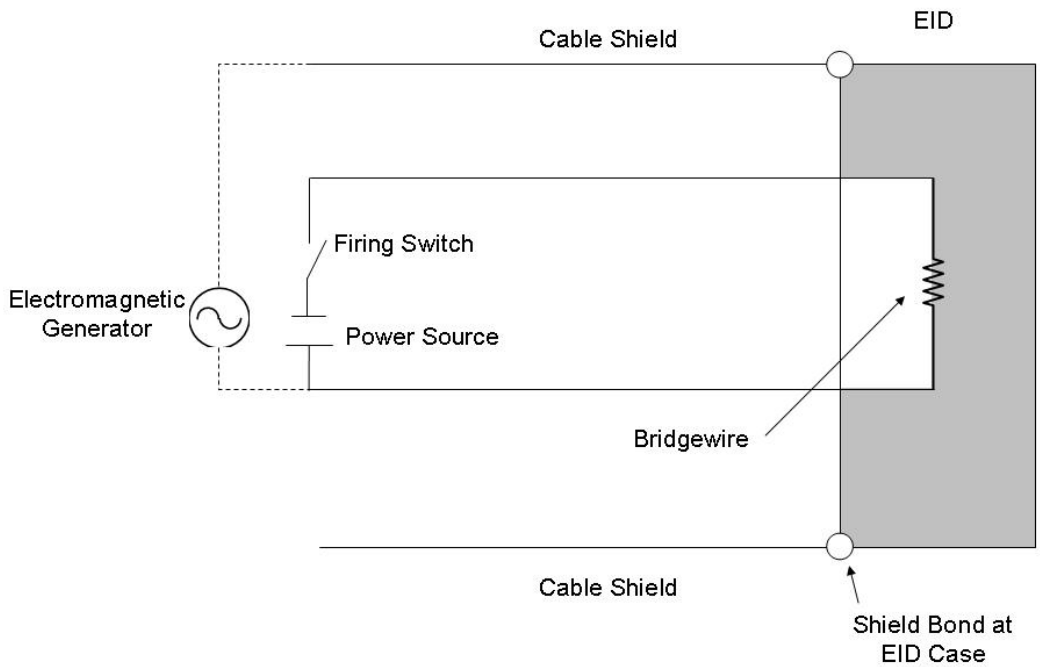

FIGURE 12. Coaxial mode RF excitation in a two-wire firing system

5.3.3.2 Energized vs. Non-Energized Firing Circuits

HERO susceptibility thresholds, or those minimum EME levels where susceptibility occurs, can vary, depending on whether the ordnance item is powered or not powered during test. Energized firing circuits may impact the coupling of energy to the EIDs by altering the electrical path by opening/closing circuits. In addition, EM energy can be coupled easily into components, relays, micro-switches, or powered firing circuits, causing energy to be applied to the EID. The test preparation process requires that the ordnance be analyzed to determine those S4 phases in which power may be applied to the EID firing circuits. This has a significant impact on the selection of the test EME, test procedures, ordnance configuration, and additional test assets. For example, if the firing circuits are energized, both peak and average test EME levels are required to address both the fast response times of electronic firing circuits and the comparatively slow response times of the EIDs themselves. (See 5.5.1.2 for guidance on selection of EME levels, peak and average, for testing energized and non-energized circuits.)

5.3.3.3 In-Line vs. Out-of-Line Circuits/Explosive Trains

5.3.3.3.1 In-Line Circuits/Explosive Trains

An in-line EID is so called because it is always aligned with the explosive train that it is intended to initiate. Consequently, if the EID should be inadvertently initiated by EM energy, the device in which it is employed will function as intended. In some applications, such as the operation of gas generators or explosive bolts, the EID may be initiated automatically upon receipt of signals from timers or sensors that respond to stimuli experienced during the fire cycle of the ordnance system. The reliability, EM vulnerability, and any potentially hazardous failure modes of the

Source: https://assist.dla.mil -- Downloaded: 2017-02-28T10:07Z
Check the source to verify that this is the current version before use.

firing circuit associated timers and sensors need to be examined carefully during the test planning process.

In addition, two new types of electronic arming devices have been developed for military use, the electronic safe and arm device and the electronic safe, arm and fire device. These devices utilize an in-line firing circuit and explosive train. Both devices have sophisticated firing schemes that usually contain a capacitor that can be charged to 2 kV to provide a relatively high-voltage firing pulse to initiate the EID. Also, these devices use very insensitive EIDs, such as EBWs and EFIs, to initiate the explosive train.

It is noted that there is a potential for RF affecting the in-line circuits/explosive trains if the system is not properly shielded. RF can upset the trigger circuit, causing the high-voltage firing pulse to initiate the EID. Monitoring these circuits for RF- induced firing stimuli is challenging and often resorts to go/no-go techniques.

5.3.3.3.2 Out-of-Line Circuits/Explosive Trains

An out-of-line EID is so called when, until armed, the EID explosive output is either misaligned with the secondary explosive train or a mechanical shutter interrupts the explosive train. Also, the EID firing circuit may contain EID-driven switches or rotors that interrupt the continuous electrical path to the power source. Mechanical shuttered systems normally are employed in conjunction with low-energy devices. Typically, this design is used in warhead fuzes or rocket motor arm/fire devices. These devices should be analyzed thoroughly to understand the arming sequence and determine the impact of the susceptibility of the EIDs.

5.3.4 Multiple Platform/System Analysis

For ordnance used on multiple platforms/systems, the test planner should be aware that the dominant resonant frequencies are likely to be platform/system-dependent, especially at HF and VHF frequencies. The test engineer should determine the “worst-case” platform/system configurations and frequencies that should be tested. The appropriate platform is selected based on test objectives and practical constraints of the test. Caution should be exercised when extending test results to platforms other than the one used to conduct the test.

5.3.5 Response Prediction

There is value in predicting the conditions expected to stimulate the greatest EID responses. These conditions include specific EME parameters, such as frequency, illumination angle, and polarization, the various physical configurations of the ordnance/associated equipment, and the procedures used to exercise the ordnance. Predictions are especially helpful for focusing the test where maximum responses might be expected. This is especially important when time or equipment constraints preclude testing all possible combinations of the aforementioned conditions. Predictions also are useful in prioritizing the generation of certain of these conditions, to increase the likelihood of detecting the greatest responses. There are several tools worthy of consideration. These tools are discussed in the ensuing paragraphs.

Source: https://assist.dla.mil -- Downloaded: 2017-02-28T10:07Z
Check the source to verify that this is the current version before use.

5.3.5.1 Results of Previous Tests

Perhaps the most useful prediction tool is simply the results of previous HERO tests on similar items. While there is no guarantee that the results will repeat themselves on the current item, trends may be evident that may suggest conditions that are not likely to cause significant responses. For example, it has been shown that sonobuoys are rarely susceptible to HF EME frequencies. Recognizing this, the tester might want to start testing at frequencies above the HF range first. It is always advisable to invest some time into researching whether test data exist on similar systems.

5.3.5.2 Analytical Prediction of Resonances

Predicting the frequencies at which EID responses exceed specified allowable levels is challenging. The purely analytical approach is complicated by the fact that the magnitude of RF currents that couple into EIDs can be influenced by the characteristics of both the outer enclosure and the internal EID cables. At microwave frequencies, ordnance enclosures are relatively large compared to the wavelength, resulting in complex internal standing wave patterns. These field patterns are complicated further by the complex, irregular internal geometry of actual systems. It is difficult to predict the magnitude of RF currents that couple into EID cables within such environments. Finally, since the impedance mismatch between the EID and the attached cables is generally unknown, it is impossible to determine the absolute magnitudes of EID currents. However, it is relatively easy to calculate resonant frequencies associated with overall physical dimensions of the weapon/host platform/system, cables, and apertures. If the uncertainty of the interactions within the weapon enclosure is ignored, the simple resonances attributed with the physical dimensions mentioned above are reasonable candidate frequencies that may warrant investigation.

5.3.5.3 Analytical Tools

There are various software tools that can be used to predict the response of EIDs when the ordnance item is exposed to defined EME levels. The MAE can be calculated if the user specifies limits on EID currents. An MAE Analysis Tool has been developed that predicts the highest field strength levels to which bridgewire-type EIDs can be exposed without exceeding established limits for EID response, and depicts the MAEs in both graphical and tabular formats. Although the program primarily was intended for predicting MAEs in the absence of testing, it can be used as a pretest aid. The program provides a conservative estimate of the most susceptible frequency and the associated MAE level for a particular ordnance configuration. It utilizes a matched, half-wave dipole model to calculate the response of the EID of interest. EID power sensitivity, MNFP first is determined from the current sensitivity MNFC and bridgewire resistance. Then an EID response limit is calculated on the basis of a selected firing consequence. The program is based on a combination of simple dipole theory and empirical data. For test planning, the output of the MAE Analysis Program is useful in three ways. First, the program predicts minimum MAEs for user-defined ordnance and ordnance-platform/system configurations. Frequencies where MAE levels are minimal are candidates for special attention, as are predicted resonant frequencies. Second, one might consider not testing frequencies where predicted EMEs are less than the performance requirement MAE levels. Lastly, at frequencies where predicted MAEs are extremely low, such as less than 10 V/m, the test planner may wish to

Source: https://assist.dla.mil -- Downloaded: 2017-02-28T10:07Z
Check the source to verify that this is the current version before use.

limit the magnitude of the test EME or reduce instrumentation sensitivity to prevent overstressing and risking burnout of the EID instrumentation.

5.3.5.4 Ordnance Operating Frequencies

When evaluating energized firing circuits, the operating frequencies should be considered. In some cases, it may be prudent to determine if test frequencies at or above the HF range could induce RF currents in the ordnance item's EIDs, thus causing damage to the initiators or initiating system. Operating frequencies below the HF range should be considered as modulation frequencies when establishing the external test EME. Caution should be exercised when testing in-band frequencies to avoid burnout of front-end circuits. It is advisable to begin testing receivers at low power levels and gradually increase them to high levels or take steps to prevent in-band energy from damaging front-end circuits.

5.4 Test Configuration

As stated in 5.2.4, it is extremely important that the test planner identify the three fundamental parameters associated with each phase of the S4, because they will ultimately drive the test requirements. Again, the three parameters associated with each phase are the following:

a. Physical configuration of the ordnance item and associated equipment,
b. Specific operating procedures used to exercise the ordnance item, and
c. The EME the ordnance item is expected to encounter.

These three parameters should be assessed for possible HERO implications for each phase, and the impact on test preparation and actual testing should be determined. Each of these parameters is discussed in more detail in the ensuing paragraphs.

5.4.1 Physical Configurations

It is important that the test planner recognize that the ordnance item may be configured differently as it transitions through the various phases of its S4. Each configuration may, therefore, exhibit significantly different responses to the EME; that is, may be very susceptible in one configuration, but completely unresponsive at another. Test planning requires a decision regarding which configurations should be tested. This decision is based on a pretest assessment of the protective features and weaknesses, and may be influenced by data from previous HERO tests on similar items. In addition, different versions of the ordnance may have their own unique physical configurations for any or all of the phases. The planner should, therefore, identify and analyze all versions of the ordnance (that is, tactical, training, telemetry, dummy, and so forth). A comparative analysis should be performed on all versions to determine which versions should be tested.

Physical configurations are defined in the following paragraphs to include the specific configuration of the ordnance item, its launcher, host platform/system, and interface cables, as well as any associated equipment and personnel needed to support the testing. An analysis should be conducted to define what constitutes an acceptable representation of the physical configurations for each phase of the S4.

Source: https://assist.dla.mil -- Downloaded: 2017-02-28T10:07Z
Check the source to verify that this is the current version before use.

5.4.1.1 Ordnance SUT

The selection of the ordnance configuration to be tested is a very important part of the planning process. Not only does the test planner have to consider the transitional configurations of the ordnance item for the various phases of the S4, but also issues related to the following:

a. Pre-production/first article versus production configuration;
b. Explosively loaded units versus inert units;
c. Tactical configurations versus training and telemetry versions; and
d. Multiple host platform/systems, launchers, interface cables, diagnostic equipment, and so forth.

5.4.1.1.1 Pre-Production/First Article vs. Production Item

Testing of prototype hardware early in the acquisition cycle may be necessary from a programmatic standpoint. However, HERO testing on pre-production hardware, normally considered "developmental tests," usually is reserved for extremely complex systems where delays cannot be tolerated due to deployment deadlines. At the conclusion of all HERO testing, the test results should be analyzed to determine if further engineering is needed prior to the evaluation test of the production hardware. If there are no design or manufacturing changes that would affect results from the prototype tested to the pre-production model, the two versions may be deemed similar enough with respect to HERO to assume that prototype test results apply to the production version.

5.4.1.1.2 Explosively Loaded vs. Inert Test Articles

HERO tests almost always are conducted using inert, production-representative units; that is, all explosives, pyrotechnics, propellants, fuels, and chemicals have been removed or replaced with inert materials. On rare occasions, HERO testing may be performed using ordnance items with explosively loaded EIDs. If explosively loaded EIDs are required for HERO testing, then standard operating procedures (SOPs) for explosives should be strictly followed. These SOPs will most likely be unique to each Service or test facility. (See 5.6.5 for non-instrumented testing.)

5.4.1.1.3 Tactical Configurations vs. Training and Telemetry Versions

A number of ordnance items, especially, missiles, rockets, and torpedoes, will have training or telemetry versions. A HERO assessment should be performed comparing the training/telemetry versions to the tactical configuration to determine the differences with respect to their EM susceptibility characteristics. If significant differences are noted, then those versions that are different with respect to their RF susceptibility characteristics will also have to be HERO tested.

5.4.1.1.4 Multiple Host Platforms, Launchers, Interface Cables, and Diagnostic Equipment

Ordnance may be authorized for use with multiple platform/systems, launchers, interface cables, and diagnostic equipment. All versions of these systems and equipment should be considered for HERO because they can have significant impact on the susceptibility of the ordnance item. An

Source: https://assist.dla.mil -- Downloaded: 2017-02-28T10:07Z
Check the source to verify that this is the current version before use.

example of multiple platform/systems would be one missile that can be launched from a tank, ground vehicle, helicopter, or human.

5.4.1.2 Ordnance Configurations

The following paragraphs provide discussions on the selection of the ordnance configurations for the various phases of the S4.

5.4.1.2.1 Transportation/Storage

It is important to determine the configuration of the ordnance system when it is being transported or stored. Some systems are shipped as all-up rounds (AURs), meaning they are completely assembled, while others are shipped as sections or components. It is obvious that AURs containing EIDs should be considered for HERO evaluation. However, it is not so obvious that system components containing EIDs be evaluated for HERO. Sections/components containing EIDs that are shipped and stored in individual containers should be considered for evaluation, especially if they are packaged in non-metal containers. Sections/components may be extremely susceptible to EME levels since their internal electronics/wiring/EIDs may be directly exposed to the EME. Evaluation of system components/sections can be very difficult and complex because at this stage of the acquisition process the logistics, including containers/packaging, is usually not very well-defined. Nonetheless, these component/section configurations should be evaluated as part of the overall test program utilizing the best available information on proposed configurations.

5.4.1.2.2 Assembly/Disassembly

Ordnance items shipped as sections/components will require assembly/disassembly sometime during their deployment cycle. This usually occurs at the field activity or onboard a Navy ship. The assembly/disassembly process should be reviewed to determine the components involved the procedures to be performed, the location where the components will be assembled/disassembled, and the expected EME at this location. If the expected EME at the proposed assembly/ disassembly location exceeds the approved levels for these operations or it is not a controlled environment area, then the components and procedures for assembly/disassembly should be included as part of the testing effort.

5.4.1.2.3 Handling/Loading

The handling and loading phase is the most crucial part of the evaluation process. Personnel contact with the ordnance item, making and breaking electrically connections, performing diagnostic tests, and attaching/removing the ordnance item from large metal structures such as launchers and platform/systems, have a pronounced impact on the EM susceptibility of the ordnance system. Often, it is difficult to determine which physical configuration of the ordnance item will yield the greatest response across the frequency spectrum. All configurations should be evaluated to ensure that sufficient test data is collected to assess all handling/loading effects.

Source: https://assist.dla.mil -- Downloaded: 2017-02-28T10:07Z
Check the source to verify that this is the current version before use.

5.4.1.2.4 Staged

Once the ordnance item has been prepared for loading operations, it is sometimes pre-positioned in a designated area until the loading operations actually occur. Usually, the designated area is not a controlled environment and, therefore, it may be exposed to high-level EME levels. In addition, the configuration of the ordnance item in the transportation/storage (T/S) phase; that is, especially those systems that are shipped as AURs in non-metal or inadequately shielded containers, is often very similar to configuration in the staged phase and, hence, the two phases may be combined into one test.

5.4.1.2.5 Platform-Loaded

The physical configuration of the ordnance item can be somewhat complex for this phase. The configuration will include the ordnance item, the launcher, the platform/system, and all interfaces cables, lanyards, and so forth. The firing circuits and other input cables in the test platform/system should be intact and operational. In addition, systems that have such devices such as safety pins and arm/de-arm mechanical switches that affect the EM energy coupling to EID firing circuits should be evaluated in all appropriate positions. As previously stated, all platform/systems/launchers/cabling/ordnance items should be evaluated.

5.4.1.2.6 Immediate Post-Launch

The ordnance configuration for the immediate post-launch phase can be very complex and difficult to replicate/simulate in real-world configurations during HERO testing. This phase is defined as the configuration(s) of the ordnance item from physical separation from the platform until safe separation occurs. The immediate post-launch configuration is usually very different from the pre-launch configuration and the item has undergone many changes in its physical state. For example, some EIDs are no longer a concern because they have been initiated, firing circuits have been altered and may be energized, and additional apertures may have been created by the jettison of components/sections or the extension of wings/fins. A detailed assessment should be performed to properly design the test configuration and setup. In addition, adequate test time should be allocated for this phase because it usually requires reconfiguring the test asset as well as performing the actual tests.

Source: https://assist.dla.mil -- Downloaded: 2017-02-28T10:07Z
Check the source to verify that this is the current version before use.

5.4.1.3 Ancillary Equipment

Ancillary equipment may be necessary in a number of the S4 phases. For example, when planning for tests of the T/S phase, one should consider all possible types of shipping containers, especially those that are intended to provide shielding protection. If the container is non-metal and expected to provide protection, then it may be required for testing. If the container is all-metal with proper joints, seams, EMI gaskets, and so forth, the container will not require testing. In some cases, the containerized configuration includes provisions for built-in tests or external connections to test equipment. Such configurations require testing with the test equipment connected to the ordnance item. In addition, container-handling equipment, cranes, or lifting equipment should be considered for possible "antenna" effects. Such equipment should be included in the test procedures for the T/S phase if it is determined that there is a potential impact on EID response.

Any special tools or equipment used for purposes of assembly/disassembly should be included in the test procedures because of the influence such equipment may have on the frequencies and levels of EM energy that couple into the EIDs. For the same reason, diagnostic gear (for example, continuity checkers, external test equipment needed to exercise built-in tests, special tools, and loading equipment) should be included in procedures for testing handling/loading configurations, if it is determined that there is a potential impact on EID response.

Loading procedures often require the use of cranes and scissors lifts, as well as other equipment with a demonstrated influence on EID coupling. Platform-loaded configurations also may be subject to diagnostic evaluations requiring external connections and the use of special tools. Special test fixtures may be necessary to support the ordnance in a simulated post-launch configuration. Such fixtures should be designed to be non-perturbing and incorporate the use of electrically non-conductive materials.

5.4.2 Operating Procedures

Experience has shown that procedures used to handle, load/download, diagnose, or otherwise operate the ordnance can influence the response of the EIDs. Typically, ordnance operating procedures are specified for assembly/disassembly, loading/unloading, and T/S configurations. It is extremely important that these same procedures be replicated during the HERO test as the item is exposed to the test EME. The test planner should know the handling/loading requirements. Due to the fact that handling and loading operations can have serious safety consequences, qualified personnel should be available to perform these procedures. Ordnance operating procedures may include both standard and special, non-standard operating procedures.

5.4.2.1 Standard Operating Procedures

Ordnance SOPs are defined in technical manuals, orders, and publications and should be used to develop HERO test procedures. However, when not available, other documentation, such as operator's guides, manufacturer's procedures, and program office guidance should be obtained and approved for use. When the SOPs become available, an assessment should be performed to determine the impact of any procedural differences on the test results.

Source: https://assist.dla.mil -- Downloaded: 2017-02-28T10:07Z
Check the source to verify that this is the current version before use.

5.4.2.2 Non-Standard (Not Specifically Authorized) Operating Procedures

Test results have demonstrated that not specifically authorized, but highly likely sequences of operation, such as touching cables or connector pins with hands or incidental contact with a grounding cable or tool, can couple sufficient energy into the device to cause a safety or reliability problem. Test preparation should include the analysis and evaluation of these possibilities and ensure that such non-standard procedures are included in the test plan to assess their impact on the susceptibility of the ordnance item's EIDs to such procedures. Methods to mitigate these susceptibilities should be included in the test report. (See 8 and Appendix A.)

5.4.3 Expected EME

All applicable EME levels should be defined for each S4 phase. In general, it is likely that the EME levels will not be the same for all phases. For example, ordnance items with shipboard applications are likely to encounter much lower EME levels during the handling/loading phase on the flight deck as opposed to the platform/system-loaded phase where the item will encounter much higher levels due to the exposure to radar main beam illumination. When test EME levels are being identified, it is important to have knowledge of the actual EME levels expected for each S4 phase.

5.5 Test EME Levels

MIL-STD-464 defines the HERO EME levels in terms of frequency and field strength levels and is applicable for all HERO tests. Guidance for tailoring the EME levels is included in the standard's appendix and MIL-HDBK-235-1C and 7. In order to get a HERO classification of "HERO SAFE ORDNANCE" at the all-up-round or appropriate assembly level, the ordnance or system under test (SUT) should be evaluated against, and be in compliance with the external EME levels for ordnance found in MIL-STD-464. Ordnance should be tested to the full range of test environments, including both near-field and far-field conditions. The test environment should be restricted to prevent personnel from being exposed to hazardous levels of EM energy or contact currents.

5.5.1 EME Parameters

There are many key parameters that significantly impact ordnance response: test frequencies, field strength levels, illumination angles, polarization, and modulation. Each of these parameters is addressed in the following paragraphs.

5.5.1.1 Test Frequencies

There are two methods of establishing the EME test frequencies, the swept frequency technique and the discrete frequency technique. Swept, or continuous, frequency testing is the preferred technique from the standpoint that the test item is exposed to all frequencies within a particular frequency band; this improves the probability of stimulating the ordnance at resonant frequencies, where responses are greatest. If the required field strength levels are relatively low and the test facility is capable and authorized to conduct swept frequency testing, this is an excellent way to conduct HERO tests. Mode-stirred chambers are a highly effective means of

Source: https://assist.dla.mil -- Downloaded: 2017-02-28T10:07Z
Check the source to verify that this is the current version before use.

performing swept or small-incremental frequency testing but are not sufficient for standalone HERO certification testing. Frequencies can be changed quickly and automatically if the RF source is computer-controlled. Even if there are significant limitations on the field strengths that can be generated, swept or continuous frequency testing may uncover resonances that would otherwise not be detected in discrete frequency testing. The value of such tests is to identify susceptible frequencies at which discrete, high-level (MIL-STD-464) testing can be concentrated.

However, it is generally not possible to generate the required criteria of MIL-STD-464 when sweeping frequencies because of limitations in equipment or frequency authorization at open-air test frequency sites. But again, practical limitations in the time required to tune high-power sources generally preclude testing at finely spaced frequencies. HERO testing normally uses the discrete frequency technique in lieu of swept or fine, incremental frequency testing. Here the challenge is to generate a sufficient number of discrete frequencies to characterize EID response within certain acceptable error margins.

There are practical limits on the amount of time and equipment capabilities available to capture the maximum responses. Table IV should be used as a representative baseline for HERO testing.

TABLE IV. Representative ordnance test frequencies

HF Communication Test Frequencies		VHF Test Frequencies		Test Frequencies Above 225 MHz	
2-30	2.00	30-150	32	225-400	230
	2.30		34		264
	2.64		36		303
	3.03		38		348
	3.48		40	400-700	400
	4.00		43		438
	4.59		45		480
	5.28		48		527
	6.06		50		577
	6.96		53		632
	8.00		57		693
	9.19		60	700-790	760
	10.56		63	790-1000	833
	12.13		67		912
	13.93		71	1000-2000	1000
	16.00		75		1155
	18.38		80		1335
	21.11[2]		84		1543
	24.25[2]		89		1783
	27.86[2]		94	2000-2700	2060
			100		2380
			115	2700-3600	2750
			132		2950

Source: https://assist.dla.mil -- Downloaded: 2017-02-28T10:07Z
Check the source to verify that this is the current version before use.

TABLE IV. Representative ordnance test frequencies - Continued

HF Communication Test Frequencies	VHF Test Frequencies		Test Frequencies Above 225 MHz	
	150-225	152[2]	2700-3600	3178
		174[2]	3600-4000	3672
		200[2]	4000-5400	4243
				4902
			5400-5900	5665
			5900-6000	5950
			6000-7900	6545
				7563
			7900-8000	7950
			8000-8400	8200
			8400-8500	8500
			8500-11000	9300
				10098
			11000-14000	11668
				13482
			14000-18000	15578
				18000
			18000-50000	26500
				33000
				39000

NOTES:
1. EME levels are defined in MIL-STD-464.
2. Time-averaging at these frequencies is required. (See 6.2.4.1.)

5.5.1.2 Field Strength Levels

The external EME levels for HERO found in MIL-STD-464, establishes the HERO EME requirements. The standard describes two field strength categories, Unrestricted and Restricted. The Unrestricted levels in MIL-STD-464 apply for the S4 phases where personnel will not be present; that is, Transportation/Storage, Staged, Platform-loaded and Immediate Post-launch.

It may be acceptable to conduct HERO testing at levels less than those indicated in MIL-STD-464, provided certain conditions are met. (See extrapolation guidance in 7.6.1.) When testing, personnel should be concerned about limits on induced/contact current (I/CC) levels that can result from exposure to radiated environments. Practical guidance to ensure compliance with radiated maximum permissible exposure (MPE) and I/CC limits is provided in 6.2.4.

During the planning phase, an evaluation of the ordnance design should be conducted to determine if it could respond to peak, as well as average levels. This generally depends on the response time of the EID and the energized firing circuits. Initiating devices and circuits with very fast response times may respond to peak field strengths and should be tested to the peak levels; devices and circuits that respond only to average field strengths need only be tested to the average field strengths. Energized firing circuits and EIDs with relatively fast response times (for example, conductive composition electric primers) are sometimes referred to as “peak power sensitive;” in contrast, the relatively slow bridgewire-type EIDs cannot respond to peak environments and are referred to as “average power sensitive” devices. It is important to

Source: https://assist.dla.mil -- Downloaded: 2017-02-28T10:07Z
Check the source to verify that this is the current version before use.

determine if EID firing circuits can be energized in any phase of the S4 evolution, from stockpile to the point of reaching a safe separation distance. If testing the powered-on state is determined to be required, then it should be at both peak and average levels. If the system is deemed likely to respond to peak levels, it also will be necessary to determine appropriate modulation parameters. (See 5.5.1.5.)

Table V summarizes the preceding discussion on EME levels, relating peak and average field requirements to EID/firing circuit response times for each of the six phases of the S4.

TABLE V. HERO test EME levels

Stockpile-to-Safe Separation Phases	EME Levels[1,2]
Transportation/storage	Unrestricted average levels
Assembly/disassembly[3]	Restricted average levels
Loading/unloading[3]	Restricted average levels
Staged	Unrestricted average levels
Platform-loaded	Unrestricted average levels
Immediate post-launch	Unrestricted average levels

NOTES:
1. EME HERO levels are defined in MIL-STD-464.
2. Peak levels should be used for energized circuits or fast responding EIDs.
3. Time average as necessary to comply with MPE restrictions (see 6.2.4).

5.5.1.3 Illumination Angles

The angle of the incident EM field has a pronounced impact on the amount of energy that couples into the EIDs. Ideally, the ordnance should be illuminated from all polar angles, as illustrated in figure 13. However, limitations in equipment or test time may preclude such a complete illumination. As a consequence, the ordnance is illuminated only at discrete angles. In these instances, modeling, engineering analysis, or previous experience with similar ordnance may be useful for predicting the illumination angles expected to induce maximum coupling.

The method of varying the illumination angle generally depends on the type of transmitting antenna being used. For fixed antennas, such as the larger antennas used at HF and VHF frequencies, the ordnance should be re-positioned with respect to the antenna. This can be done manually or with the use of a turntable. The use of a turntable facilitates 360-degree azimuth illumination, but requires that the declination angle of highly directive transmitting antennas be changed periodically and the azimuth rotation repeated. This may require changing the height of the antenna. Higher-gain, mobile antennas are highly recommended for testing above the HF band, as they can be readily moved about the system under test and adjusted for different declination angles. The use of portable antennas facilitates more thorough illumination, especially when high directivities make illumination a more critical parameter. Additional guidance for selecting discrete illumination angles is provided in 6.4.1.

Source: https://assist.dla.mil -- Downloaded: 2017-02-28T10:07Z
Check the source to verify that this is the current version before use.

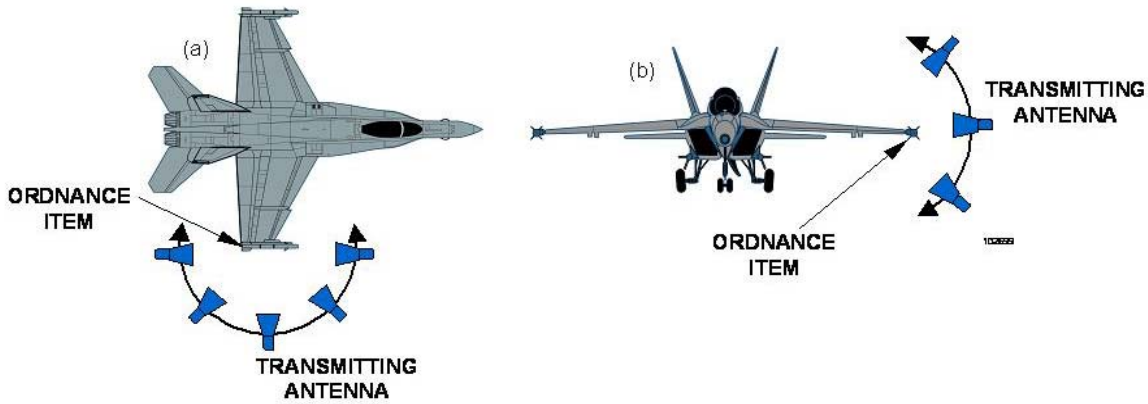

FIGURE 13. VHF and radar illumination angles

No matter what methods are used to change the illumination angle, it should be remembered that these changes can have a pronounced effect on the magnitude of current induced into the EIDs. If illumination is maintained during changes in the angle of incident radiation, sufficient time should be allowed for the EID and EID instrumentation to respond fully to the changes in the induced current.

5.5.1.4 Polarization

Polarization of the test environment should be consistent with the anticipated field conditions for the ordnance. For example, for shipboard ordnance, a vertically polarized 35-foot whip antenna should be utilized in the 2 to 30 MHz band in addition to a horizontally polarized antenna. Both horizontal and vertical polarization should be utilized above 30 MHz.

5.5.1.5 Modulation

For most HERO testing, the average EME level is the primary concern. This is because the majority of bridgewire EIDs have relatively long response times (tens of milliseconds). Most EIDs are not very responsive to the type of short duration, peak EME levels associated with common modulation formats. In such cases, the magnitude of the induced EID current is no greater for a modulated EME than for an unmodulated CW EME, assuming the same average levels for both. Modulation may be used to conduct the test, but the EID response should be defined in terms of average field strength levels. However, there are some EIDs that exhibit extremely fast response times (fractions of a millisecond). Conductive composition primers are an example of such devices. In these instances, the EID may have a response time fast enough to react to a single pulse or, as in thermal stacking, gradually respond over time to repeated pulses, as in a pulse train. If it is determined that the EID can respond to peak EME levels for single pulses or from thermal stacking, the test EME should include the peak levels specified in MIL-STD-464. In addition, energized EID firing circuits should be assumed to have the potential to respond instantaneously, within a fraction of a microsecond or less, and also should be tested to the HERO peak EME levels specified in MIL-STD-464.

Source: https://assist.dla.mil -- Downloaded: 2017-02-28T10:07Z
Check the source to verify that this is the current version before use.

The requirement for testing to peak level EME levels implies the need to choose the modulation type; for example, pulse modulation (PM), amplitude modulation (AM), frequency modulation (FM), and associated modulation parameters (pulse width, PRF, tone frequency, frequency deviation, and so forth). In general, the selection of modulation parameters should be chosen to represent the environments expected to be encountered during the ordnance S4 and maximize the response of the EIDs or EID firing circuits. (See 6.4 for additional guidance.)

5.6 EID Instrumentation

There are essentially two test methods used for HERO evaluations, instrumented and non-instrumented tests. Instrumented tests are preferred over non-instrumented (go/no-go type) tests because instrumented tests provide a detailed quantification of the ordnance item's susceptibility to RF energy. Non-instrumented tests, if conducted properly, require a significant number of test items and test time to complete the evaluation. Otherwise, a non-instrumented test that uses very few test items or poor test techniques results in insufficient statistical data needed to determine compliance.

For the purposes of this handbook, this discussion will concentrate on instrumented testing and will provide a limited discussion on the non-instrumented testing in 5.6.5. The following paragraphs provide discussions on the various types of instrumentation systems used in ordnance testing, characteristics of an instrumentation system, the selection rationale, and other types of instrumentation used for unique non-bridgewire EIDs or firing circuits.

5.6.1 Instrumentation Characteristics

EID instrumentation should be capable of detecting and monitoring RF-induced responses of EIDs contained in an ordnance system. Yet, because HERO testing is complex and dynamic in nature, the instrumentation is also complex and very challenging. In addition, there are no military standards or specifications governing the use of EIDs contained in ordnance systems. Hence, EIDs vary significantly with respect to size, sensitivity, and thermal response time. Traditional HERO instrumentation relies on detection of the change (rise) in the temperature of the initiating element, which is directly related to the induced current. In essence, the instrumentation characteristics are as follows:

a. The sensor/transducer should be capable of detecting small changes in temperature in a device that has a small mass and, therefore, very little thermal energy associated with its temperature.

b. The instrumentation system (that is, sensor/transducer, monitoring, and recording devices) should be capable of detecting responses to short duration pulses or stimuli.

c. The sensor/transducer should not alter the firing and EM characteristics; for example, MNFS and impedance of the EID.

d. The instrumentation system should not alter the EM characteristics of the ordnance SUT.

e. The instrumentation system should not be adversely impacted or altered by the EME.

Source: https://assist.dla.mil -- Downloaded: 2017-02-28T10:07Z
Check the source to verify that this is the current version before use.

f. The instrumentation system should be capable of operating for the duration of the test.

g. The instrumentation package should be rugged, compact, and relatively simple to operate.

The following paragraphs provide discussions and guidance with respect to instrumentation sensitivity, response time, and non-perturbing effects.

5.6.1.1 Sensitivity

As general guidance, the instrumentation system should be capable of detecting a temperature rise in the EID equivalent to or less than 5 percent of the EID's MNFC. Sensitivity less than 1 percent of the MNFC is desirable and achievable with most of the instrumentation systems discussed in this paragraph for instrumentation of typical HBW EIDs. However, the most important factor concerning the instrumentation sensitivity is that it is sensitive enough to establish the required pass/fail margin (P/FM) when the system is exposed to its expected operational EME. Another important factor is that the entire instrumentation system, including the sensor, transducer, data transmission technique, receiver, monitor, and recorder that will be used during the test should be considered when determining the system sensitivity.

5.6.1.2 Instrumentation System Response Time

The instrumentation system response time is defined as the time required for the instrumentation system to increase from 10 to 90 percent of its final value in response to a step function input. The instrumentation response time should be at least as fast as the thermal time constant of the EID being monitored. However, a response equal to or less than one-tenth of the EID thermal time constant is desired. Also, it is important to include the entire instrumentation system (for example, sensor/transducer, receiver, monitor/recorder, and analog-to-digital converter) that will be used during the test when determining the overall system response time. Controlling the rate at which the stimulus is changed can, in some cases, compensate for inadequate instrumentation response time. (See 6.3.1.1, 6.3.2.1, and 6.3.3.1.)

5.6.1.3 Effects of Instrumentation on SUT

It is recognized that the SUT, including the ordnance item, its launcher, aircraft, and associated firing and control cables and circuitry, when placed in an EME, can act as a receiving antenna. Its efficiency as an antenna is dependent upon many variable parameters. When these parameters satisfy certain conditions, it is possible for EM energy to be coupled into the ordnance item's EIDs.

Consequently, any alterations or modifications, such as conductive leads or housing apertures to the ordnance (for example, the introduction of an instrumentation package) may impact the antenna efficiency. This can result in either an enhancement of the RF coupling into the ordnance item or, conversely, a decrease in the RF pickup in the ordnance item's EIDs. Obviously, both of these are undesirable effects. Therefore, every effort should be made to select and implement an instrumentation package that will not impact the RF characteristics of

Source: https://assist.dla.mil -- Downloaded: 2017-02-28T10:07Z
Check the source to verify that this is the current version before use.

the ordnance. The instrumented system should exhibit the same RF characteristics as the non-instrumented test article or, more appropriately, an in-service production item.

In addition, the instrumentation system should not be adversely affected by the EME. An all-fiber-optic-based system from sensor to receiver/recorder is preferred for HERO testing. However, the use of conductive-type instrumentation systems is acceptable, but the test engineer should be aware of the potential adverse effects and employ techniques to minimize the impact on the ordnance response. Examples of such techniques include the following:

a. Using twisted pairs with double over-braid shields terminated 360 degrees at all connector and bulkhead interfaces;

b. Running the instrumentation cables internally and in close proximity to the internal skin of the ordnance system's enclosure body (airframe); and

c. Keeping the instrumentation package within the ordnance enclosure; for example, within an empty motor case.

5.6.2 Types of Instrumentation

Instrumentation systems used in HERO programs historically have been based on measuring the temperature rise in the bridgewire of an EID, from which the equivalent induced RF current may be inferred. It has become the accepted practice for HERO testing to quantify the EID response in terms of current. Moreover, this equivalent dc current is used as a convenient point of comparison to the EID's statistical firing data that usually are given in terms of current. A typical HERO instrumentation system consists of four basic units as follows:

a. Sensor to detect an RF-induced response;

b. Transmission line to carry the sensor data to a receiver or readout device;

c. Device to translate sensor data into desirable units of measure; and

d. Means of recording the data into a permanent record. Figures 14 and 15 provide block diagrams of the typical HERO instrumentation systems currently used in HERO test programs.

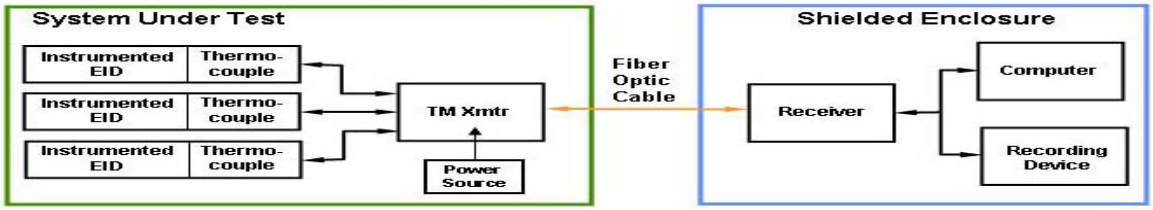

FIGURE 14. Metal-junction thermocouple instrumentation for bridgewire-type EIDs

Source: https://assist.dla.mil -- Downloaded: 2017-02-28T10:07Z
Check the source to verify that this is the current version before use.

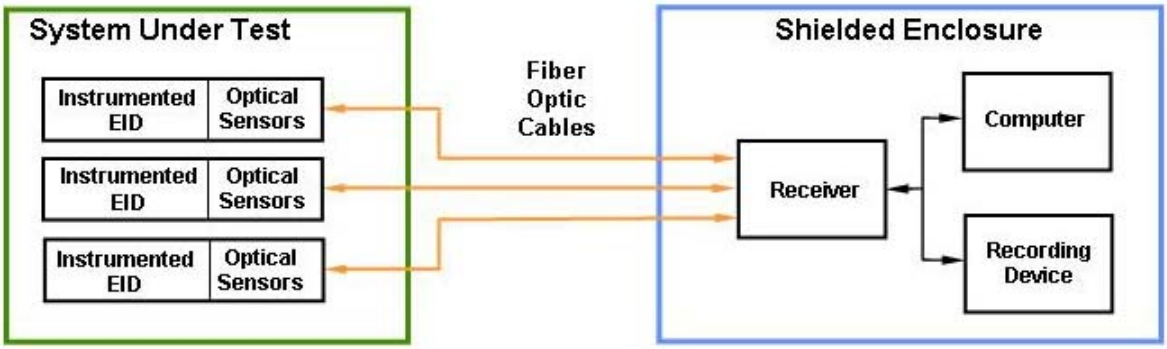

FIGURE 15. Typical optical sensor instrumentation for bridgewire-type EIDs

5.6.2.1 Sensors and Transducers

There are a variety of sensors and transducers used to detect and measure ohmic heating of bridgewire-type EIDs. These are metal-junction thermocouples, thermopiles, optical thermocouples, phosphor-based optical sensors, and vacuum thermocouple simulated EIDs. Also, in the past, some DoD activities have performed HERO tests using thermal-sensitive materials or wax-based instrumentation. However, this type of instrumentation seldom is used today.

These sensors and transducers can be divided into several categories and sub-categories to compare and contrast their inherent characteristics and advantages/disadvantages for HERO testing. Figures 16 through 18 provide diagrams of metal-junction thermocouple, optical thermocouple, and vacuum thermocouple/simulated EIDs.

Source: https://assist.dla.mil -- Downloaded: 2017-02-28T10:07Z
Check the source to verify that this is the current version before use.

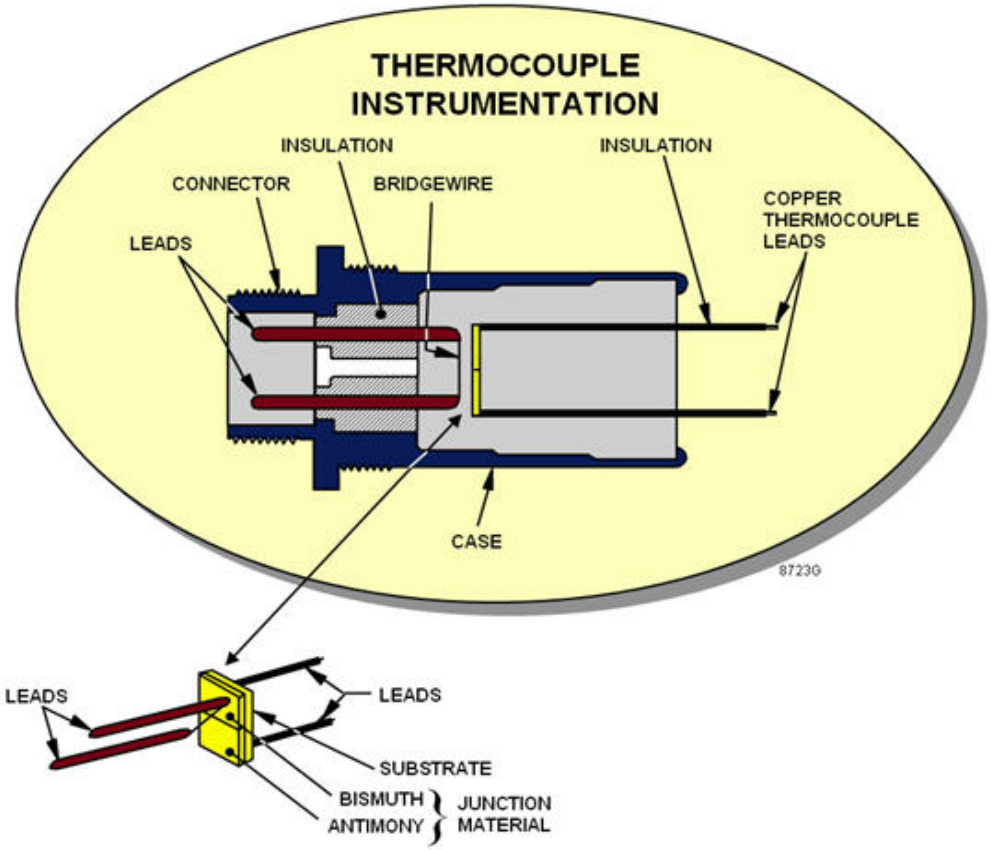

FIGURE 16. Bridgewire-type EID instrumented with a metal-junction thermocouple

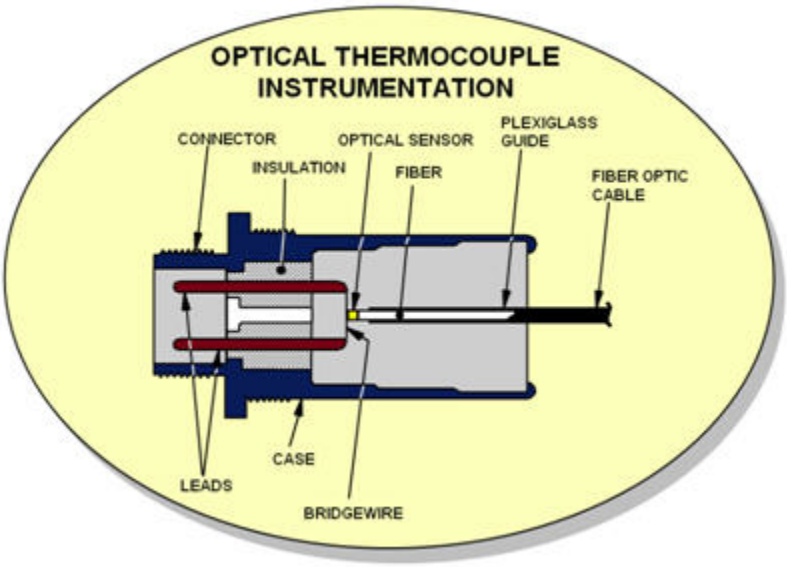

FIGURE 17. Bridgewire-type EID instrumented with an optical thermocouple

Source: https://assist.dla.mil -- Downloaded: 2017-02-28T10:07Z
Check the source to verify that this is the current version before use.

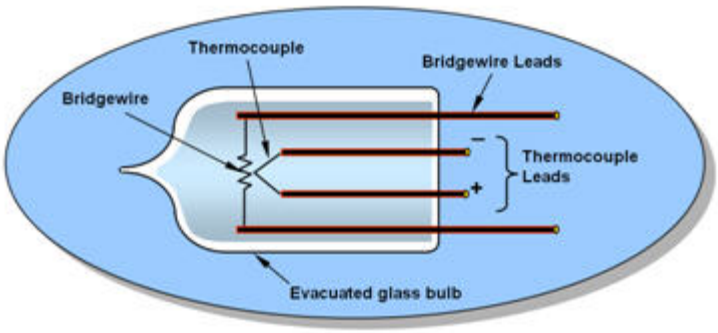

FIGURE 18. Vacuum thermocouple/simulated bridgewire-type EID

5.6.2.2 Actual EID vs. Substituted Devices

Sensors can be divided into two categories as follows:

a. Those that use the actual system EIDs (inert), and

b. Those that substitute the actual EID with a simulated device.

The EM energy coupling into an EID is dependent on the impedance matching of the EID bridgewire/circuit and the ordnance system firing circuit. Those instrumentation systems that use the actual EID are preferred because it is not known how a simulated device compares to the actual EID's characteristic impedance, especially for frequencies above 400 MHz.

5.6.2.3 Optical vs. Conductive-Type Sensors

Optical, sensor-based instrumentation systems are preferred over conductive-type sensor instrumentation systems because the potential impact on the ordnance system's RF characteristics is eliminated by the use of non-conductive instrumentation leads.

5.6.2.4 Sensor-to-Bridgewire Proximity

Some sensors are attached to or are in direct contact with, the EID's bridgewire. Others are positioned in proximity to the bridgewire (for example, within 0.003 inch). Non-conductive sensors (optical-based) can be placed in direct contact with or attached to the bridgewire without significantly altering its inherent electrical and EM characteristics. In addition, the position of the sensor/bridgewire is more stable and is less likely to change under environmental stress. The conductive-type sensors normally are not attached to, or in contact with, the bridgewire. Special care should be taken during the sensor installation process to ensure that the conductive sensor is positioned correctly, and that it is secured (non-conductively) in place so that its position does not change under environmental stress. However, direct contact sensors can affect the thermal inertia of a bridgewire.

Source: https://assist.dla.mil -- Downloaded: 2017-02-28T10:07Z
Check the source to verify that this is the current version before use.

5.6.2.5 Computers and Recording Devices

There are a variety of monitoring/recording devices used in HERO testing, depending on the type of sensor/transducer and data transmission device selected for the test. There are several important factors associated with the recording and monitoring equipment. First, it is important to ensure that the equipment is capable of displaying the results in real-time and that the results are displayed in units that easily are related to the EID pass/fail criteria. In addition, it is important that these devices are included as part of the instrumentation system when determining the response time and sensitivity.

5.6.3 Bridgewire EIDs and Ordnance Instrumentation

The basic steps for ordnance instrumentation for HERO tests are to minimize both the disturbance to the EM energy created by the instrumentation package and the coupling of the RF energy to the data channels. The instrumentation package should be small and internal to the ordnance item under test. Optical telemetry techniques may be used to reduce coupling of RF energy into the signal leads. For example, no external hardwire connections and no changes to the EID circuit impedance are permitted unless the impact to the circuit can be quantified and documented. The instrumentation package itself should be mounted inside the ordnance item and, if power is required to operate the instrumentation, it will be provided through battery packs or air turbine power generators.

Normally, HERO tests are conducted using ordnance items that have been modified to remove all explosives, pyrotechnic, and combustible materials including EIDs. The explosively loaded EIDs are replaced with either instrumented versions of the inert EID or substituted with vacuum thermocouple/simulated EIDs. However, the impedance of simulated EIDs should be quantified to ensure differences can be normalized in the test data. The instrumented EIDs are installed in the ordnance item at precisely the same location as the original EID. The instrumentation output leads are routed to the outside of the ordnance item and then routed in the instrumentation recording equipment. Implementation of HERO instrumentation (that is, disassembly/assembly of the ordnance item and installation of the replacement EIDs) may be accomplished by the ordnance item manufacturer or trained Government personnel.

The test engineer should be aware of the potential adverse effects of adding new ports for entering and exiting the external skin or internal sections of the ordnance system. Proper EMC design techniques should be used to minimize the impact on the ordnance's EM characteristics. Examples of these techniques include the following:

a. Ensure that all conductive instrumentation components remain internal to the ordnance system;

b. When entering and exiting the ordnance system, especially a section that is considered an EMI enclosure with fiber-optic cables, use existing apertures or waveguide below cut-off techniques;

c. Use shielded cables and EMI connectors when passing conductive cables through bulkheads or entering/exiting the system's outer skin;

Source: https://assist.dla.mil -- Downloaded: 2017-02-28T10:07Z
Check the source to verify that this is the current version before use.

d. Keep all conductive instrumentation cables as short as possible and ensure that these cables are located next to the internal skin of the ordnance;

e. Calibrate the instrumentation system by applying a step input of dc with a duration that is at least 10 times the thermal response time of the EID. An ammeter with at least one-half percent accuracy may be used to measure this pulse. The output of the sensor/transducer is measured and recorded. This output versus input is the calibration for the system. The calibration establishes the relationship of the step input into the EID bridgewire to the output parameter of the instrumentation. This instrumentation output value then can be related to the EID's MNFS established by the manufacturer or DoD agency. The calibration also will establish the instrumentation system's minimum sensitivity and dynamic range. There are three important factors to consider when calibrating the system:

   1) All system components (receiver, recorder, computers, and so forth) that will be used during the test and all component settings should be calibrated.

   2) The dc pulse should be inputted directly into each individual bridgewire lead or an analysis of the EID circuit should be performed to determine the amount of current applied to the particular bridgewire being monitored.

   3) Calibration data should be obtained for a minimum of five points [50, 25, 10, and 5 percent of the MNFC, and just above the minimum detectable current (MDC) level]. However, more calibration points will provide a better approximation of the interpolated data. These points should form a straight line when plotted on logarithmic graph paper.

5.6.4 Instrumentation/Monitoring Firing Circuits and Electronic Devices

Instrumentation for firing circuits and electronic devices are, by its very nature, unique. Extreme care should be exercised to ensure that the instrumentation provides an accurate measurement of the voltage, current, or other response without significantly changing the test results. The primary concerns are that the shielding integrity of the circuit should not be altered by the instrumentation and that the instrumentation should not form an inadvertent antenna that may change the EM characteristics of the circuit or device under test from what would have occurred without the instrumentation installed. Instrumentation methods involving fiber-optic sensors and cables almost exclusively are used in order to achieve the goals of accurate, unperturbed measurements. (See MIL-STD-331 and US Army Materiel Command Technical Report TR-RD-TE-97-01 for additional details on the instrumentation and testing of electronic circuits.)

Source: https://assist.dla.mil -- Downloaded: 2017-02-28T10:07Z
Check the source to verify that this is the current version before use.

5.6.5 Non-Instrumented Testing (Go/No-Go Type)

Go/no-go type verification tests generally are not recommended because they require a significant number of test items, test time, and high-powered EME generation equipment to evaluate systems properly and should only be performed when instrumentation is not feasible. In cases where instrumentation of the device is not feasible, reasonable results can be obtained with go/no-go techniques using either a safety/reliability margin verification test or a statistically adequate sample size to ensure confidence in the results. Both methods require that the test facility have the capability to test EME levels at or above the required EME criteria levels.

5.6.5.1 Safety/Reliability Margin Verification Test

The safety/reliability margin verification method requires exposing the SUT to EME levels that are higher than the criteria EME levels by the appropriate margin defined in MIL-STD-464. The explosively loaded EIDs will have the minimum explosives needed to represent the production EID, provide visual indication of initiation, and satisfy any safety concerns. Testing at EME levels significantly greater than the EME criteria levels can be a problem if the test facility does not have the equipment necessary to generate the higher EME test levels. For example, if the SUT has a safety concern, then the required test EME level would have to be, per MIL-STD-464, 16.5 dB greater than the EME criteria. (For example, if the EME criteria were 1000 V/m, then the required test EME level would have to be 6,683 V/m.)

In addition, test techniques become very important, especially if the SUT contains a combination of both safety and reliability EIDs. In order to satisfy the safety margin (16.5 dB) requirements, the reliability EIDs would have to be subjected to EME test levels significantly higher than the 6 dB reliability margin specified in MIL-STD-464. A possible solution to this problem is to subject the SUT to two complete test cycles. The first test cycle would be conducted to verify the reliability EIDs and the second test cycle would be conducted to verify the safety EIDs. Prior to conducting the safety margin test, the reliability EIDs should be removed or replaced with impedance-matched dummy loads to avoid overexposure. This method would require a doubling of the time required for the verification test. This should be considered when planning the testing effort.

Also, a large number of each type of EID would be required for testing. All EIDs should be replaced after each test run for a given set of conditions; that is, frequency, test EME level, operating procedures, ordnance configuration, and so forth. This would eliminate the concern for altering the electrical/physical properties of the EID, leading to dudding, due to the repeated application of energy below that required for EID initiation.

5.6.5.2 Statistical Sample Size Verification Test

Basically, this type of test calls for exposure of a large number of EID samples to each set of test conditions. The number of fires to no-fires statistically demonstrates compliance with the required margins and confidence levels. This means that many test runs will have to be performed on a number of test samples for a given set of conditions. For example, to demonstrate compliance for the 20 mm aircraft gun system, a minimum sample size of 5,000 (primer only, otherwise inert) 20 mm rounds were required for testing. In addition, this

Source: https://assist.dla.mil -- Downloaded: 2017-02-28T10:07Z
Check the source to verify that this is the current version before use.

test method requires the test facility to be capable of generating the EME criteria levels. To reduce the test time, it would be preferable if the test facility were capable of conducting tests on many samples simultaneously.

6. CONDUCTING THE TEST

6.1 Introduction

Section 5 discussed the key elements of HERO test preparation, namely, analysis of key information, determination of test requirements, and EID instrumentation. Once these steps have been addressed and a test plan has been developed, the test activity is in a position to begin the test. (See 8 and Appendix A.) This paragraph provides guidance for actually conducting a HERO test. Ordnance should meet the HERO requirements in MIL-STD-464. This paragraph discusses the ideal way to conduct a HERO test. The test methodology assumes that the objective of Joint certification is to determine maximum EID responses for ordnance that is physically representative of real-world usage, and operated or exercised with defined, standardized procedures, while being subjected to the specified HERO EME levels.

Safety in HERO testing is paramount. Safety considerations begin with an awareness of the hazards. Appropriate procedures to minimize risks then should be clearly identified. The performance of certain pretest measurements, discussed in subsequent paragraphs, may be useful for determining limits on transmitter power necessary to prevent overexposure of test personnel.

Guidance concerning the generation of test EME levels presumes that the objective is to create a "worst-case" EM stimulus for the SUT. EME levels typically are defined in terms of frequency, field strength, modulation, and illumination angle, for which certain combinations will induce maximum EID responses. Each of these parameters is discussed in subsequent paragraphs.

Additional guidance also is provided to assist the test activity in determining test techniques and procedures designed to maximize EID response. Selected topics, such as non-linear effects and "over-testing," also are presented.

6.2 Safety

6.2.1 Standard Operating Procedure (SOP)

A written SOP should be included as a part of the test plan. (See 8 and Appendix A.) The purpose of the SOP is to identify the hazards associated with HERO testing and the precautions that should be taken to minimize those hazards. In general, there are two types of hazards, those related to preparation, handling, and operation of the ordnance and its associated platform/system/ancillary equipment; and those related to the test environment.

6.2.2 Safety Briefings

A safety briefing should be conducted prior to the start of each day's test to review the SOP and familiarize all test participants with the hazards and precautionary measures. This briefing affords everyone an opportunity to gain a better understanding of the SOP, ask questions, and

Source: https://assist.dla.mil -- Downloaded: 2017-02-28T10:07Z
Check the source to verify that this is the current version before use.

offer suggestions to improve safety. Daily refresher meetings also are recommended to reinforce the rules for safe operations or discuss safety concerns.

6.2.3 Ordnance Handling

Handling large, heavy ordnance items can be hazardous. In most cases, personnel handling ordnance should take formal training to become certified to work on specific ordnance or operate the associated handling equipment; for example, forklifts, loading equipment, and so forth. The test director should ensure that all training/certification requirements are satisfied and documented. If formal certification is not required, the test director should instruct members of the test team on proper handling/loading/operating procedures and identify any safety hazards that may exist. Ordnance handling/loading equipment should meet all individual requirements for safety certification.

6.2.4 Maximum Permissible Exposure (MPE)

The concern for possible overexposure exists whenever personnel are exposed to the test EME levels. HERO test directors should take steps to ensure that personnel are not exposed to EME levels that exceed the MPEs specified in DoDI 6055.11. MPEs are specified in terms of radiated fields and I/CCs. Experience has shown that, in the HF and VHF ranges, the I/CC MPEs typically impose more restrictive conditions. In fact, it is not unusual to find I/CCs approaching the I/CC MPE value, even though radiated fields are well below the radiated MPE values. At radar frequencies, radiated MPEs are generally of greater concern.

6.2.4.1 Radiated MPEs

Radiated MPEs, defined in terms of both the electric and magnetic field strengths, are listed in table VI, which has been extracted from DoDI 6055.11, and depicted graphically in figure 19.

TABLE VI. Radiated MPEs for restricted environments

Frequency Range (MHz)	Electric Field Strength (V/m)	Magnetic Field Strength (A/m)	Power Density (E-field,H-field) (W/m^2)	Averaging Time (minutes)
0.1-1	1842	16.3/f	9000, $100{,}000/f_M^2$	6
1-30	$1842/f_M$	16.3/f	9000, $100{,}000/f_M^2$	6
30-100	61.4	16.3/f	1.0, $100{,}000/f_M^2$	6
100-300	61.4	0.163	10	6
300-3000	--	--	$f_M/30$	6
3000-15000	--	--	100	$19.63/f_G^{1.079}$
15000-300000	--	--	100	$2.524/f_G^{0.476}$

Note: f_M is the frequency in MHz; f_G is the frequency in GHz.

Source: https://assist.dla.mil -- Downloaded: 2017-02-28T10:07Z
Check the source to verify that this is the current version before use.

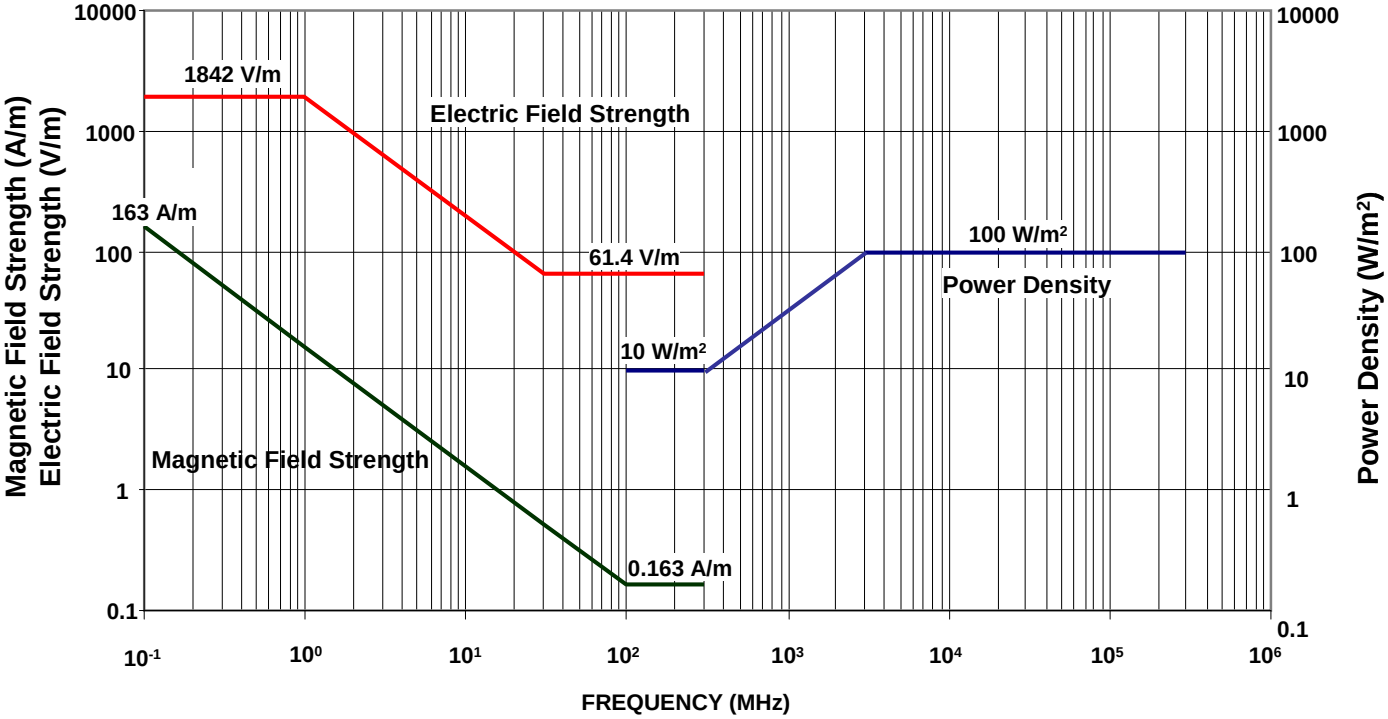

FIGURE 19. Radiated MPEs for restricted environments

From a practical standpoint, the electric field MPEs impose a greater constraint for HERO testing than the magnetic field MPEs because the latter heat biological tissue and induce internal currents less effectively than electric fields; thus, monitoring the electric field is sufficient to ensure compliance with radiated exposure limits. The radiated MPEs cited in DoDI 6055.11 are for continuous exposure. Time averaging may be applied to the radiated limits, thereby allowing for higher field strengths to which personnel may be exposed; however, this requires the length of exposure time to be limited appropriately. It should be noted that some of the Restricted levels of MIL-STD-464 do exceed the continuous exposure levels. In all such cases, the duration should be limited to times determined from the following formula:

$T_{allowed}$ = $6\,(FS_{MPE}/FS_{req'd})^2$ where,

$T_{allowed}$ = time allowed (minutes),

FS_{MPE} = continuous MPEs (V/m), specified in table VI,

$FS_{req'd}$ = required field strength (V/m), specified in MIL-STD-464.

6.2.4.2 I/CC MPEs

Table VII lists the applicable I/CC limits. The table provides the limits for induced and contact currents resulting from exposure to radiated fields as specified in DoDI 6055.11. The possibility of exceeding this I/CC limits is greatest when personnel are conducting handling/loading

Source: https://assist.dla.mil -- Downloaded: 2017-02-28T10:07Z
Check the source to verify that this is the current version before use.

operations. Such operations typically require physical contact with large, conductive objects; for example, individual ordnance systems or associated host platform/systems/launchers.

Radiation of such large, conductive objects at HF and VHF frequencies often results in resonant conditions conducive to the flow of high RF current from the object, through the body, to ground. In addition, when large objects are exposed to HF radiation, there are enhanced regions of electric field strength in the vicinity (for example, under aircraft wings), which may increase the levels of induced body current.

TABLE VII. I/CC restrictions

Frequency (MHz)	Maximum Current through both Feet (mA)	Maximum Current through each Foot (mA)	Contact Current Grasp/Touch (mA)
0.003 – 0.100	2.0f	1.0f	1.0f/0.5f
0.100 - 110	200	100	100/50

6.2.5 Compliance with MPEs

Care should be exercised when performing the HERO testing so as not to exceed the radiated and I/CC MPEs. This can be done by limiting transmitter output power or adjusting the time during which personnel are exposed to the test EME levels. In some cases, it may be necessary to tailor the HERO requirements in MIL-STD-464. In addition to DoDI 6055.11, test personnel should also refer to IEEE C95.1 and C95.6 for more in-depth guidance on MPE limit compliance.

6.2.6 Operations Involving Host Platforms and Ancillary Equipment

There are a variety of hazards that may exist when working with host platform/systems or ancillary equipment, such as cranes, forklifts, loading equipment, and so forth. The test director should make personnel aware of these hazards and the basic rules that should be followed to avoid an accident or damage to the equipment.

6.2.7 Personal Protective Equipment (PPE)

There are several types of PPE that may be required during a HERO test. Each test operation should be evaluated to determine if PPE is required to provide an extra measure of protection against specific hazards. PPEs also should be included in the SOP for the test operation. The list includes, as a minimum, hearing and eye protection, safety footwear, and protective clothing. Hearing protection is required when personnel are in the vicinity of operating aircraft engines. Eye protection is required in the vicinity of rotating helicopter blades or when there is a risk of being hit by debris from live primers. Personnel working with heavy items always should wear protective footwear, such as steel-toed boots.

Source: https://assist.dla.mil -- Downloaded: 2017-02-28T10:07Z
Check the source to verify that this is the current version before use.

6.3 Generating Test EMEs

Test activities should refer to MIL-STD-464 for applicable environment levels. In addition, for tailoring purposes, refer to MIL-HDBK-235-1C and 7.

6.3.1 HF Environment (2-30 MHz)

Approximately 23 percent of the HERO test frequencies are in the HF range. (See table IV.) However, testing in the HF range often requires more than 23 percent of the total HERO test time, particularly for large systems or systems attached to large platform/systems. This is because EIDs are, in general, more responsive to lower frequencies, large items tend to resonate at HF, and system cables act as relatively efficient antennas at HF frequencies. Operationally, HF environments tend to be difficult to avoid because the antennas that produce them are typically omni-directional. Figure 20 illustrates typical antennas, transmitters, and monitoring equipment necessary to generate test EME levels. Specific aspects of HF testing are addressed in the following paragraphs.

Source: https://assist.dla.mil -- Downloaded: 2017-02-28T10:07Z
Check the source to verify that this is the current version before use.

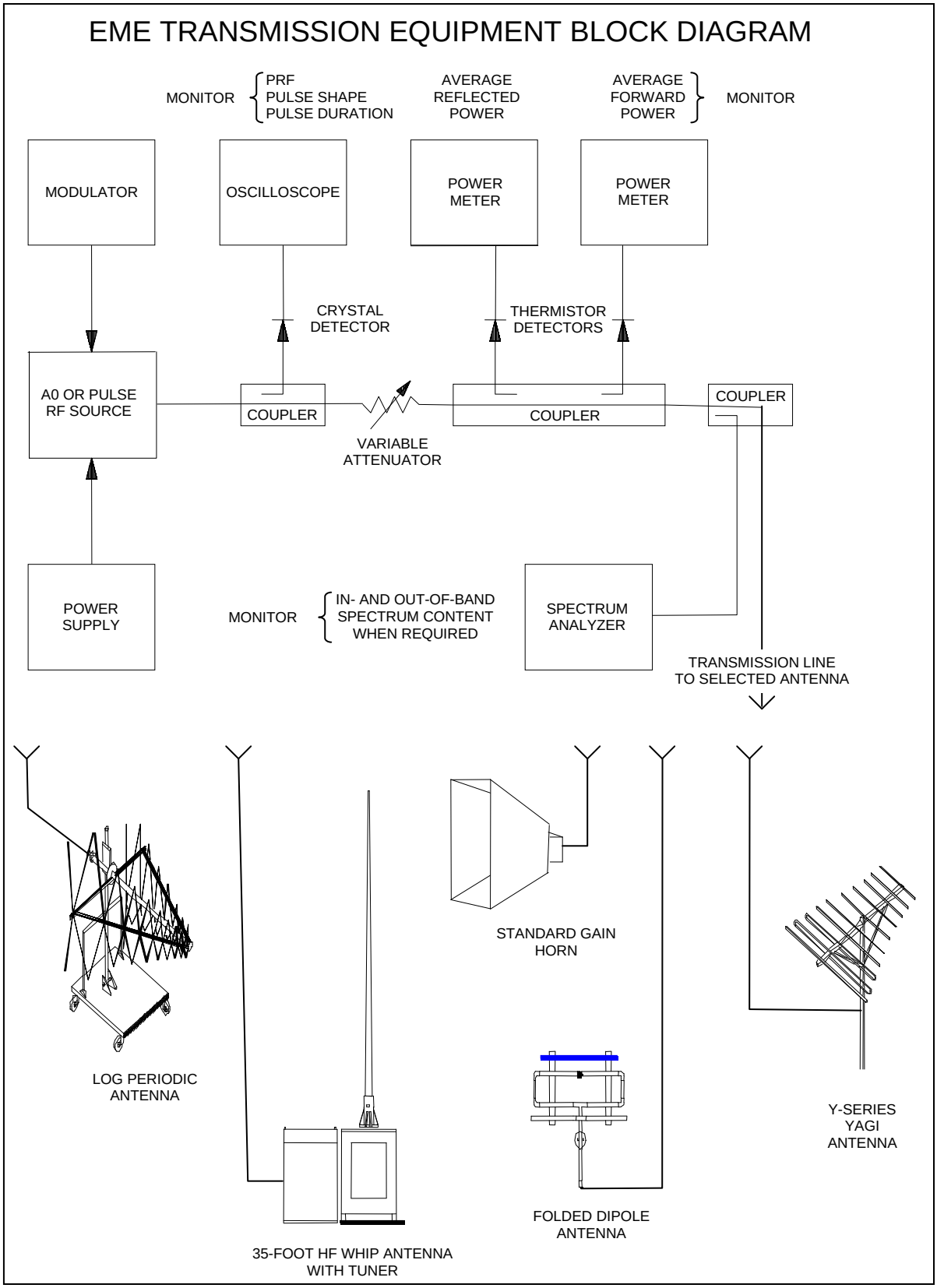

FIGURE 20. EME transmission equipment and antennas block diagram

Source: https://assist.dla.mil -- Downloaded: 2017-02-28T10:07Z
Check the source to verify that this is the current version before use.

6.3.1.1 Frequencies

Table IV recommends 20 test frequencies in the HF range. The spacing of these specific frequencies is logarithmically based. The number of samples was selected on the basis of maximum quality factor ("Q"), or resonance bandwidth, typical of most ordnance items. The intent is to test at enough frequencies across the HF range to achieve a reasonable probability of capturing maximum responses. The recommended frequency sampling density is greatest in this frequency range, averaging 0.67 samples/MHz.

6.3.1.2 Field Strength Levels

The HF environment (2-30 MHz) found in the HERO table of MIL-STD-464 includes both Unrestricted and Restricted categories. The Restricted levels are applicable to ordnance used in areas (loading/unloading and assembly/disassembly) where personnel are exposed to the EME. It should be noted that there is a restriction on the length of time personnel can be exposed at the highest three HF test frequencies. Guidance for determining time limits at other frequencies and recommended procedures to ensure compliance with these limits can be found in 6.2.4 and 6.2.5.

6.3.1.3 Transmitting Antennas

Typically, low-gain, omnidirectional type antennas are used to generate HF test environments. In some cases, a transverse EM chamber is used; however, for Joint ordnance, a 35-foot whip is preferred. Vertical monopole or whip antennas are most common, with variations such as conical monopoles. The type of transmitting antenna used to create the HF environment can have a pronounced impact on the response of the ordnance being tested, because of strong ordnance-antenna interactions, an expected consequence of testing within the near field of the antenna. It is noted that MIL-STD-464 recommends the use of HF antennas "representative" of operational types. In near-field environments, the ordnance and antenna comprise a unique EM system, with the ordnance essentially acting as a parasitic element. Coupling efficiencies are influenced by the interactions between the ordnance (or ordnance-platform combination) and the antenna.

HF testing usually is accomplished in the near-field region. It is impractical or undesirable to conduct HF tests in the far field for the following reasons:

a. The far-field distance is, in general, a function of wavelength and antenna dimension. A conservative approximation assumes the greatest value of these three computations. There is not enough room at most facilities to accommodate the separation required for far-field illumination. In the HF range, the greatest distance is typically 1.6λ (15 meters at 32 MHz to 240 meters at 2 MHz, as illustrated in figure 21);

b. Many facilities cannot achieve the required MIL-STD-464 EME levels at far-field distances; and

c. HERO test philosophy emphasizes the importance of establishing realistic, but "worst-case" conditions (assumed, for HF, to exist in the near field).

Source: https://assist.dla.mil -- Downloaded: 2017-02-28T10:07Z
Check the source to verify that this is the current version before use.

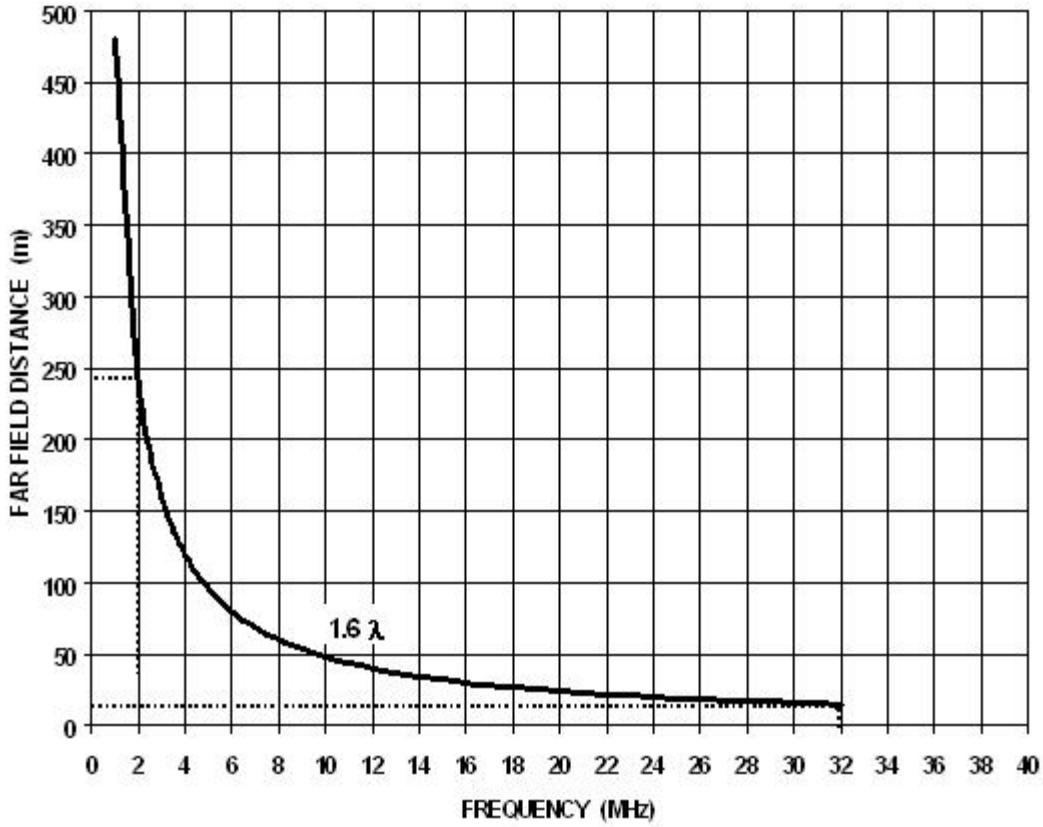

FIGURE 21. Far-field distance for HF monopole

The transfer of energy between the ordnance and the test antenna is a function of the type of antenna, the separation distance, and the orientation of the ordnance with respect to that antenna. It can, therefore, be expected that differences in types of antennas or antenna-ordnance geometry will result in differences in measured responses. MIL-STD-464 recommends test antennas be representative of the types of antennas encountered during in-service use. For example, if the item is going to be used onboard a ship, the HF test antenna should be a vertically polarized 35-foot whip antenna.

Standard facility HF antennas may not adequately represent certain types of transportable or mobile radios that will be encountered in the field. For example, man-pack HF radios produce a unique type of EME for personnel-borne ordnance carried or handled in the vicinity of these emitters. Army/Marine Corps ordnance items may be exposed to EME levels unique to the HF communication systems used on ground vehicle platform/systems. The test planner should evaluate these situations to determine if additional testing is warranted, that is, requiring the use of these special types of HF sources or antennas.

Source: https://assist.dla.mil -- Downloaded: 2017-02-28T10:07Z
Check the source to verify that this is the current version before use.

6.3.1.4 Field Calibration

Field calibration is the process necessary to establish the field strength at a location deemed appropriate for illuminating the ordnance or ordnance-platform/system configuration. The importance of establishing a well-defined, standardized calibration process is particularly important for near-field testing. Differences in type of antenna, ordnance location, and orientation relative to the transmitting antenna can have pronounced effects on the RF current distributions, and, hence, coupling of RF energy into EIDs. Figure 22 illustrates an HF field calibration technique utilized in HERO testing.

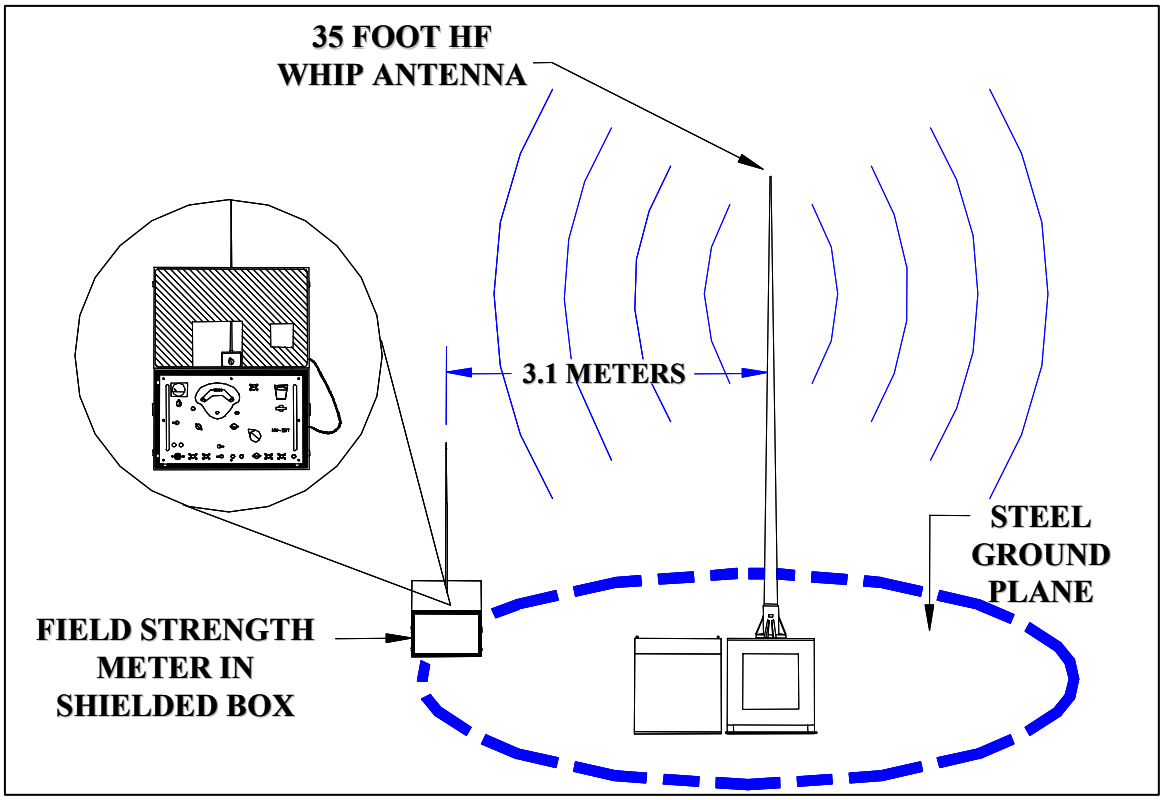

FIGURE 22. HF field calibration technique

Calibration procedures begin by tuning the transmitter to a selected frequency without the SUT in the vicinity of the transmitting antenna. An electric field measurement is made at a specified location relative to the antenna. It has been determined that the criterion for selecting this location is Service-dependent. For example, the Navy uses the "10-foot rule," based on the minimum distance allowed between the SUT, including host platform/systems, HF deck edge, and whip antennas on aircraft carriers and large-deck amphibious ships. This is considered to be the "worst-case" scenario for HF EME levels in the Navy. Thus, Navy HERO certifications are conducted by establishing a known EME level at a distance of 10 feet from the transmitting antenna. The ordnance or ordnance platform/system then is positioned with its closest point 10 feet from the transmitting antenna for all orientations of the SUT. For conical HF

Source: https://assist.dla.mil -- Downloaded: 2017-02-28T10:07Z
Check the source to verify that this is the current version before use.

transmitting antennas, the separation distance is established between any element of the radiating system and the SUT. For other Services, a minimum separation distance between the radiating system and the SUT will vary depending on the type of system and how it will be fielded.

There are various types of electric field sensors used by DoD facilities to measure the HF environment. Sensors used to measure the electric field in near-field conditions should not be of a design that assumes far-field conditions.

6.3.1.5 Illumination Angles/Illumination Area

A minimum of four, equally spaced, symmetric illumination angles should be used for testing in the HF range. Multiple illumination angles typically are achieved by re-positioning the ordnance or host platform/system with respect to the antenna. As an alternative, the SUT can be rotated on a turntable. Orientations may consist of "nose-on," or front of the platform/system, "tail-on," and each side facing the antenna. Alternatively, the test item may be illuminated from 45-degree angles with respect to the front and rear of the SUT. Experience has shown that, for HF tests involving large host platform/systems, maximum ordnance responses do not necessarily occur at the orientations where the ordnance item is closest to the antenna. Figure 23 depicts a helicopter being tested in the nose-on orientation at a 10-foot distance from the HF transmitting antenna.

FIGURE 23. Helicopter in nose-on orientation from 35-foot HF antenna

6.3.1.6 Polarization

Ideally, both vertical and horizontal polarizations should be used for HF testing; however, vertical polarization is preferred as experience has shown that vertical polarization generally results in greater EID response than horizontal polarization.

Source: https://assist.dla.mil -- Downloaded: 2017-02-28T10:07Z
Check the source to verify that this is the current version before use.

6.3.1.7 Modulations

HF modulations should include CW for testing non-energized circuits and modulated formats for testing energized firing circuits or peak power-sensitive EIDs, such as conductive composition electric primers. AM or on-off keying can be used to determine if firing circuit susceptibility is modulation-dependent. AM modulation should be employed at 80 percent with 400 or 1000 Hz tone frequencies, as well as SUT operating frequencies. On-off keying should be conducted at a 50-percent duty cycle, 400-1000 Hz rate.

6.3.1.8 Pre-Test Platform Characterization Measurements

Testing in the HF range can require a great deal of test time, especially when the ordnance item/platform/system is large and interacts strongly with the transmitting antenna. Determining the maximum EID response requires testing the item at several illumination angles at each frequency. The problem is compounded when the ordnance item can be attached at several different locations on the host platform/system. Time-consuming handling/loading procedures further exacerbate the problem. In some cases, there is simply not enough test time to complete the entire test sequence for all possible combinations of frequency, illumination angle, and ordnance attachment location. Pretest platform/system characterization has proven beneficial for identifying worst-case combinations of these parameters. If these combinations are identified prior to the test, the test director may choose to emphasize testing only at selected combinations identified as "worst-case." The following paragraphs describe two types of measurements that can be used for pretest platform/system characterization.

6.3.1.8.1 Platform-to-Ground Current Measurements

With the transmitter operating at the minimum output power necessary for detectable readings, a series of measurements are made to determine the RF current that flows between the ordnance and the ground. An RF current probe can be placed around a ground strap to keep the human out of the loop, or, if currents are less than I/CC MPEs, around the wrist of test personnel as they make contact with the ordnance at a particular platform/system location. A series of ground current measurements can be made fairly rapidly for each test frequency at several different illumination angles. Normalized to a constant field strength, a graph of measured currents provides valuable insight concerning which frequencies, illumination angles, and ordnance locations produce the highest ground currents. Certainly in cases where the EIDs are within the platform/system-ground current path, this is a good indication where the most severe conditions exist. As an example, figures 24a and 24b depict RF currents by a whip antenna 10 feet away in nose-on and tail-on orientations. The dominant frequencies appear to be between 6 and 8 MHz and the worst ordnance location is Station 4, the Starboard Forward Rail. Normalized current levels for other aircraft-antenna orientations also can be plotted to confirm these trends. While not "foolproof," this procedure generally gives a fairly accurate indication of the "hot" frequencies, illumination angles, and ordnance locations. It should be noted that the worst-case ordnance locations may change as a function of illumination angle. Experience has shown that aircraft wing locations opposite the transmitting antenna can exhibit higher currents than the wing closest to the antenna. This underscores the need to make these measurements using at least four evenly spaced illumination angles.

Source: https://assist.dla.mil -- Downloaded: 2017-02-28T10:07Z
Check the source to verify that this is the current version before use.

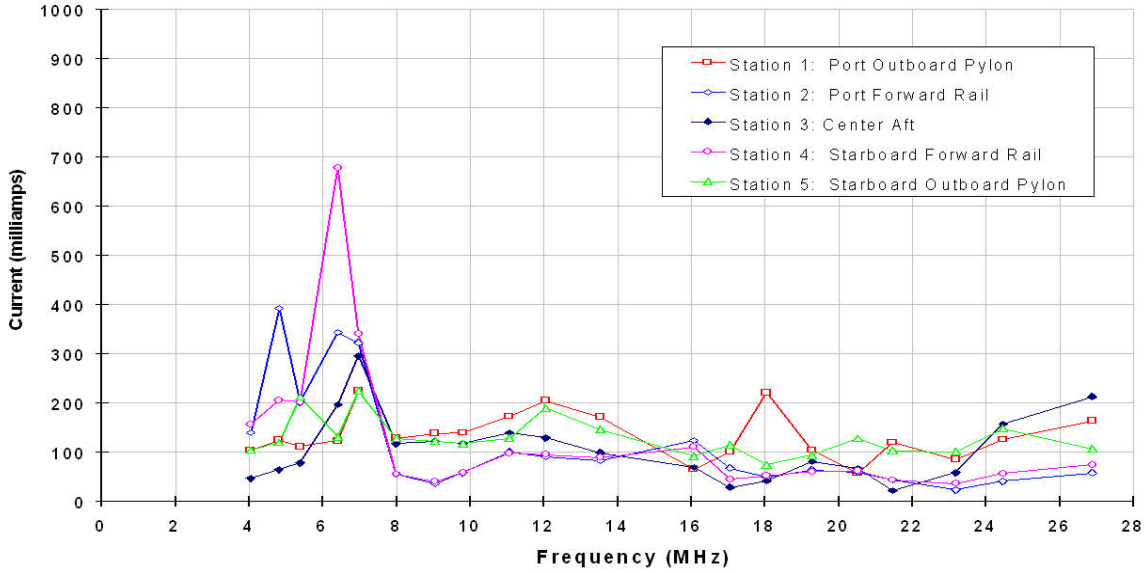

FIGURE 24a. RF current-ground for aircraft in nose-on orientation

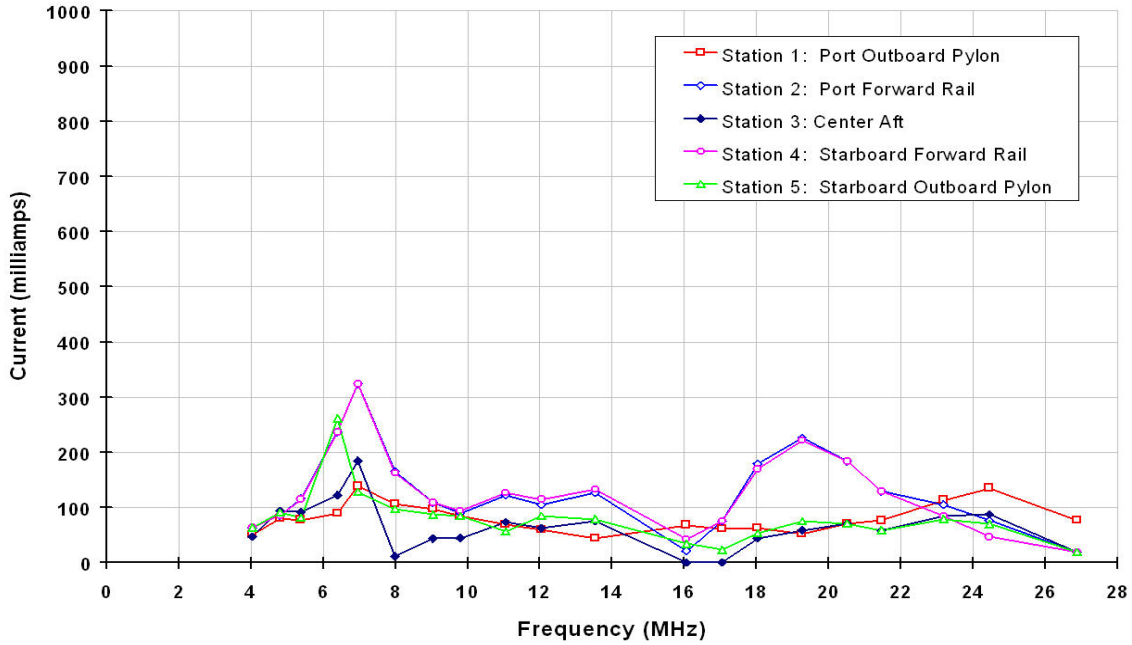

FIGURE 24b. RF current-ground for aircraft in tail-on orientation

Source: https://assist.dla.mil -- Downloaded: 2017-02-28T10:07Z
Check the source to verify that this is the current version before use.

6.3.1.8.2 Voltage-Ground Measurements

Similar measurements can be made of the RF voltage potential difference between ordnance locations and the ground (assumed to be a conductive ground plane). Plots of normalized data (as shown in figures 24c and 24d) are also indicative of "worst-case" frequencies, illumination angles, and ordnance locations. Figure 25 shows a typical setup for voltage-ground measurements on an aircraft.

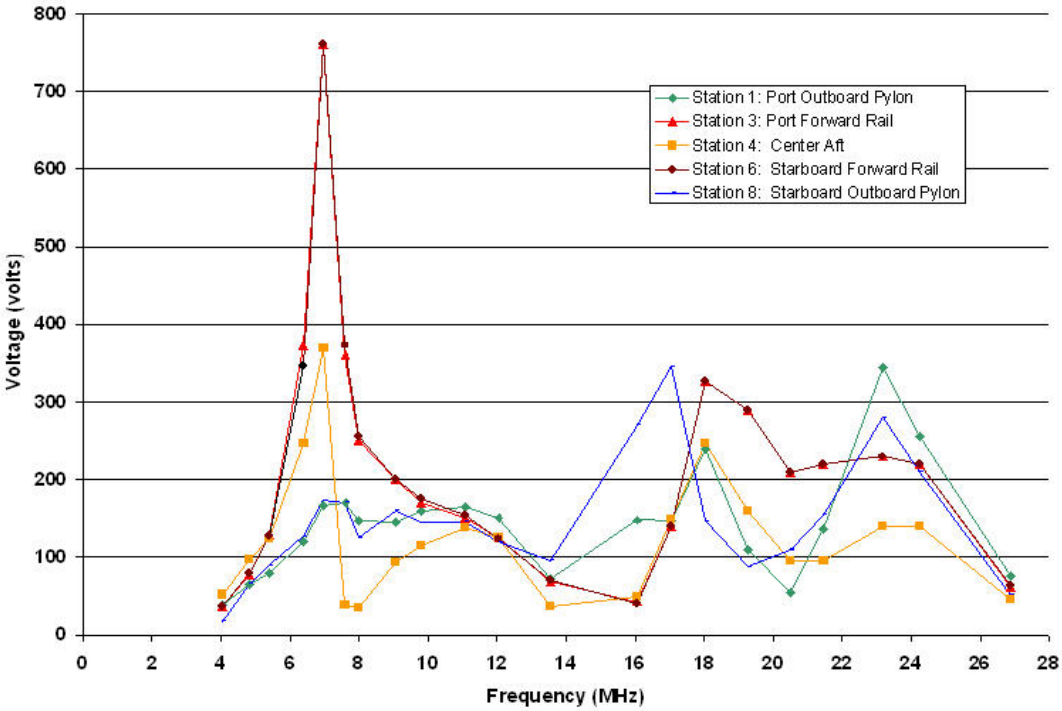

FIGURE 24c. Aircraft-to-ground RF voltages (nose-on orientation)

Source: https://assist.dla.mil -- Downloaded: 2017-02-28T10:07Z
Check the source to verify that this is the current version before use.

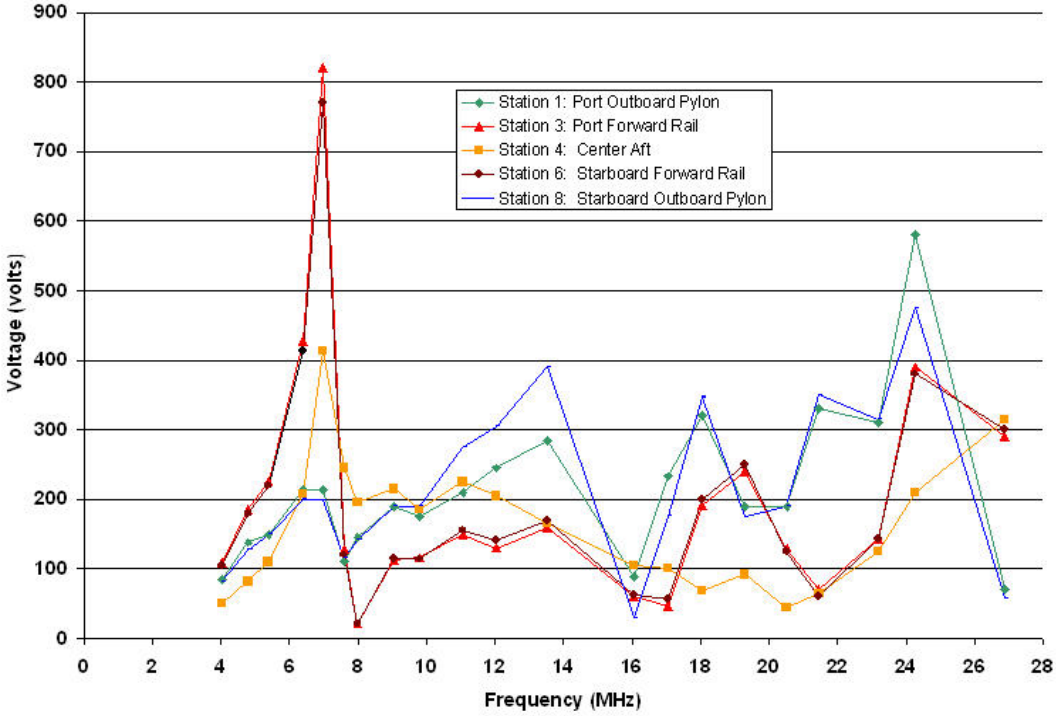

FIGURE 24d. Aircraft-to-ground RF voltages (tail-on orientation)

FIGURE 25. Voltage-ground measurement setup

Source: https://assist.dla.mil -- Downloaded: 2017-02-28T10:07Z
Check the source to verify that this is the current version before use.

6.3.2 VHF Environment (30-225 MHz)

Approximately 30 percent of the recommended HERO test frequencies are in the VHF range. (See table IV.) Traditionally, the Army has placed more emphasis on the VHF range of frequencies for testing and, therefore, uses more test points in that range than the Navy. For Joint applications, testing is extremely important in this range since ordnance enclosures and internal cables are of resonate lengths. Moderate gain (6-10 dB), linear-type VHF transmitting antennas tend to illuminate all of the ordnance or ordnance-platform/system surfaces, provided the test item is located at far-field separation distances. Various aspects of VHF testing are discussed in more detail in the ensuing paragraphs.

6.3.2.1 Frequencies

Table IV recommends 26 test frequencies in the VHF range. The number of sample frequencies is deemed adequate to capture maximum responses. The sampling density in this frequency range averages 0.08 samples/MHz.

6.3.2.2 Field Strength Levels

Unrestricted peak and average EME levels are specified in MIL-STD-464. The Restricted EME levels in this frequency range reflect the maximum operational EME levels expected while personnel are executing ordnance-handling procedures. No restriction on personnel exposure time is necessary from 30-150 MHz; that is, continuous exposure is allowed. However, time averaging at frequencies from 150-225 MHz, is necessary.

6.3.2.3 Transmitting Antennas

Log-periodic or Yagi-type antennas commonly are used to generate VHF/UHF test environments. If testing is conducted within the near field, the same concerns apply as discussed previously for HF testing; that is, the measured responses are likely to be influenced by the type of antenna and the ordnance location/orientation. This problem could be eliminated if testing were accomplished at far-field separation distances. However, maintaining far-field separation distances and appropriate field strength levels may be impractical. The far-field distance is, in general, a function of wavelength and antenna dimension. In the VHF range, the greatest distance often is computed as 1.6λ. It is recommended that test activities strive to achieve the greatest separation possible, especially at the lower end of the VHF range. This amounts to a compromise between achieving desired field strength levels and maximizing the distance between the transmitting antenna and the SUT.

Standard test facility VHF antennas may not adequately represent certain types of transportable or mobile radios that will be encountered in the field. For example, man-pack HF/VHF radios produce a unique type of EME for personnel-borne ordnance carried or handled in the vicinity of these emitters. Army/Marine Corps ordnance may be exposed to EME levels unique to the VHF communication systems used on ground vehicle platform/systems. The test planner should evaluate these situations to determine if additional testing is warranted; that is, requiring the use of these special types of VHF sources/antennas.

Source: https://assist.dla.mil -- Downloaded: 2017-02-28T10:07Z
Check the source to verify that this is the current version before use.

6.3.2.4 Field Calibration

The process for VHF field calibration is similar to that used for HF field calibration, in that it involves establishing a defined field strength at a location deemed appropriate for illuminating the ordnance or ordnance platform/system. (See 6.3.1.4.) At frequencies where far-field distances cannot be achieved, a standardized calibration process is particularly important. Differences in type of antenna, ordnance location, and orientation relative to the transmitting antenna are likely to have pronounced effects on the RF current distributions, and hence, coupling of EM energy into EIDs. Figure 26 illustrates the field calibration technique for VHF frequencies.

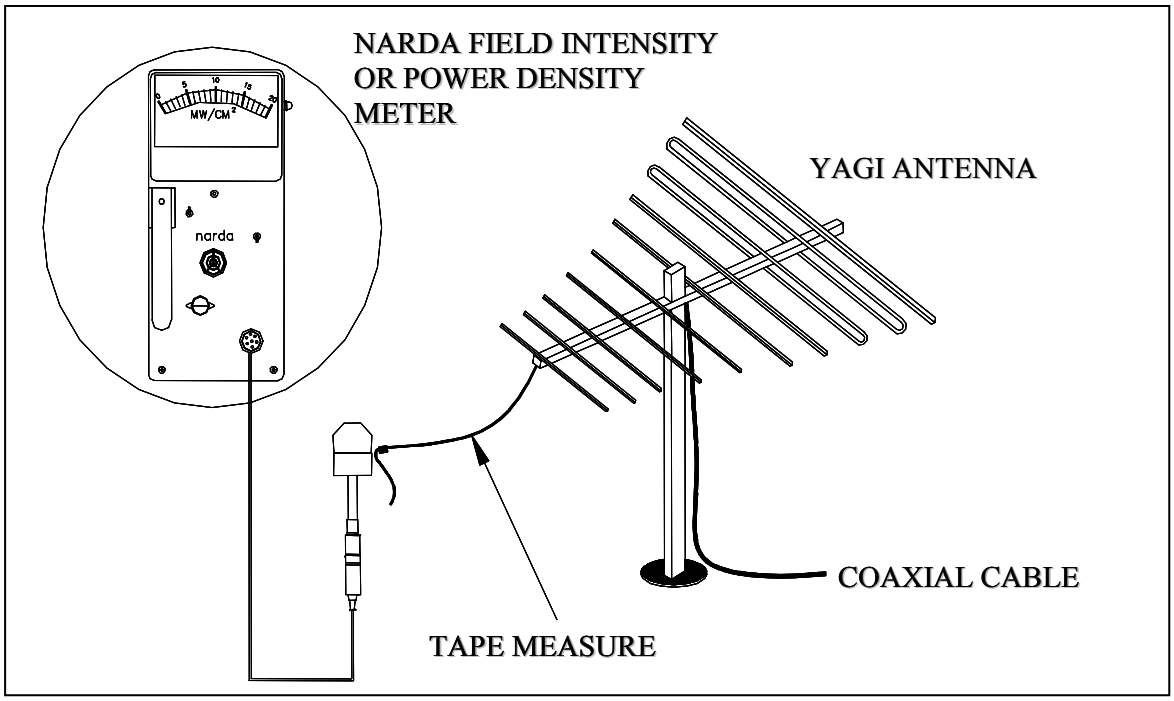

FIGURE 26. VHF range calibration technique

The transmitter is tuned at a selected frequency without the SUT in the vicinity of the transmitting antenna. The desired field strength should be established at a location as far away as possible from the transmitting antenna. This will more closely simulate most operational scenarios, minimizing near-field effects and achieving maximum illumination area. However, test EME level requirements may be difficult to achieve with available transmitter power and, thus, require relatively close distances. An electric field measurement is made at the specified location. This location is where the ordnance will be “spotted” once the test begins.

There are various types of electric field sensors used by DoD facilities to measure the VHF environment. Sensors used to measure the electric field under near-field conditions should not be of a design that assumes far-field conditions.

Source: https://assist.dla.mil -- Downloaded: 2017-02-28T10:07Z
Check the source to verify that this is the current version before use.

6.3.2.5 Illumination Angles/Illumination Area

Because the directional properties of the transmitting antennas tend to increase at higher frequencies (more narrow beam width), illumination angle has a more critical effect on the ordnance response. Thus, for VHF testing, where moderate gain antennas are used, it is highly desirable to illuminate isolated ordnance items from all angles (continuous illumination). Portable antennas facilitate such continuous or "painted" illumination. If the transmitting antenna cannot be moved in elevation/azimuth, the ordnance should be illuminated from at least eight angles, symmetrically selected in a 360-degree arc. If attached to a large host platform/ system, the ordnance should be illuminated at a minimum of four aspect angles in a 180-degree arc. Platform-mounted ordnance can be illuminated by re-positioning the platform/system to achieve four symmetrical illumination angles, with the transmitting antenna pointed directly at the ordnance item. See 5.5.1.3 for further guidance on illumination angles. Figure 27 depicts ordnance illumination at VHF frequencies.

FIGURE 27. Illumination of test item at VHF frequencies

6.3.2.6 Polarization

Both vertical and horizontal polarizations should be used.

6.3.2.7 Modulations

VHF modulations should include CW for testing non-energized circuits and modulated formats for testing energized firing circuits or peak power-sensitive EIDs (for example, conductive composition electric primers). AM/FM should be used to determine if modulations can interfere with firing circuit logic. AM modulation should be conducted at 80 percent with a 400 or 1000 Hz tone frequency as a minimum. FM should be tested using a ± 50 kHz deviation.

Source: https://assist.dla.mil -- Downloaded: 2017-02-28T10:07Z
Check the source to verify that this is the current version before use.

Additional frequencies for both AM and FM should be determined from SUT operating frequencies. PM parameters will be dependent on transmitter limitations and transmitted frequencies.

6.3.3 Frequencies Above 225 MHz

Approximately 47 percent of the recommended HERO test frequencies are above 225 MHz. (See table IV.) For the most part, the EME levels in this range represent radar systems and are thus characterized by high peak-to-average field strength ratios. Because of the low duty cycle, it is possible that fast responding EIDs and solid-state circuits could sustain peak power damage without any ill effects caused by the average power. In such cases, care should be taken not to expose the SUT to excessive peak levels while striving to attain specific average levels. At very low duty factors, a transmitter could produce undesirably high peak levels while attaining the desired average levels. If the SUT is considered to be peak power-sensitive, the peak field strengths may be obtained without simultaneously achieving the required average field levels. However, testing should include the required average levels.

6.3.3.1 Frequencies

Table IV recommends 43 test frequencies above 225 MHz. Departures from the logarithmic pattern are required to adequately represent specific DoD emitters of concern and ensure test frequencies at the edges of the MIL-STD-464 frequency bands. From a practical standpoint, the number of samples is dictated by the amount of test time required to tune the high-power transmitter.

6.3.3.2 Field Strength Levels

Unrestricted peak and average levels are specified in MIL-STD-464.

6.3.3.3 Transmitting Antennas

For frequencies above 225 MHz, the antennas most commonly used are high-gain, aperture types, such as horns and reflectors. Far-field separation distances are achievable in most cases, thus promoting consistent results from facility to facility, despite any differences in the types of the antennas used. The far-field distance is calculated as $2D^2/\lambda$, where D is the largest dimension of the antenna. The far-field distance is, in general, a function of wavelength and antenna dimension. At frequencies above 225 MHz, the greatest distance is typically $2D^2/\lambda$. This implies separation distances less than 10 feet for the antenna types and sizes. Antenna gain of 15 dB or higher are typical. Higher gains are attainable for large D/λ antennas, but without any apparent advantage in view of the corresponding increase in separation distance required to maintain far-field conditions. In fact, a notable benefit of smaller antennas is the relative ease with which they can be maneuvered about the SUT. This facilitates repositioning the antenna to establish different illumination angles. It may be helpful to mount medium-to-large-size antennas on wheeled platform/systems to further ease relocation. The use of a flexible waveguide at/near the antenna in lieu of a rigid guide also facilitates antenna repositioning and polarization changes. Array element spacing should be sufficient to preclude arcing between elements at high peak powers.

Source: https://assist.dla.mil -- Downloaded: 2017-02-28T10:07Z
Check the source to verify that this is the current version before use.

6.3.3.4 Field Calibration

Field calibration at frequencies above 225 MHz is accomplished similar to frequencies in the VHF/UHF range. (See 6.3.1.4.) The transmitter is tuned at a selected frequency without the SUT in the field. An electric field measurement is made at a specified location relative to the antenna, where the ordnance will be "spotted" once the test begins. Figure 28 illustrates an example of a field calibration technique for frequencies above 225 MHz. Field measurements can be made with field probes that read out in units of either field strength or power density. Assuming that measurements are made under far-field conditions, power density readings can be converted easily to units of field strength using the following relationship:

$$E = 61.4\sqrt{P_d}\text{ , where}$$

E is electric field strength, in V/m, and

P_d is power density, in mW/cm^2.

Measurements also can be made using standard gain receiving antennas and power meters; E is calculated as:

$$E = 2.176 / \lambda \sqrt{\frac{Pr}{Gr}}\text{ , where}$$

Pr is the received power, in mW, and

Gr is the receiving antenna gain (a dimensionless ratio).

Any losses from cables and attenuators should be taken into account, effectively increasing the value of Pr.

Source: https://assist.dla.mil -- Downloaded: 2017-02-28T10:07Z
Check the source to verify that this is the current version before use.

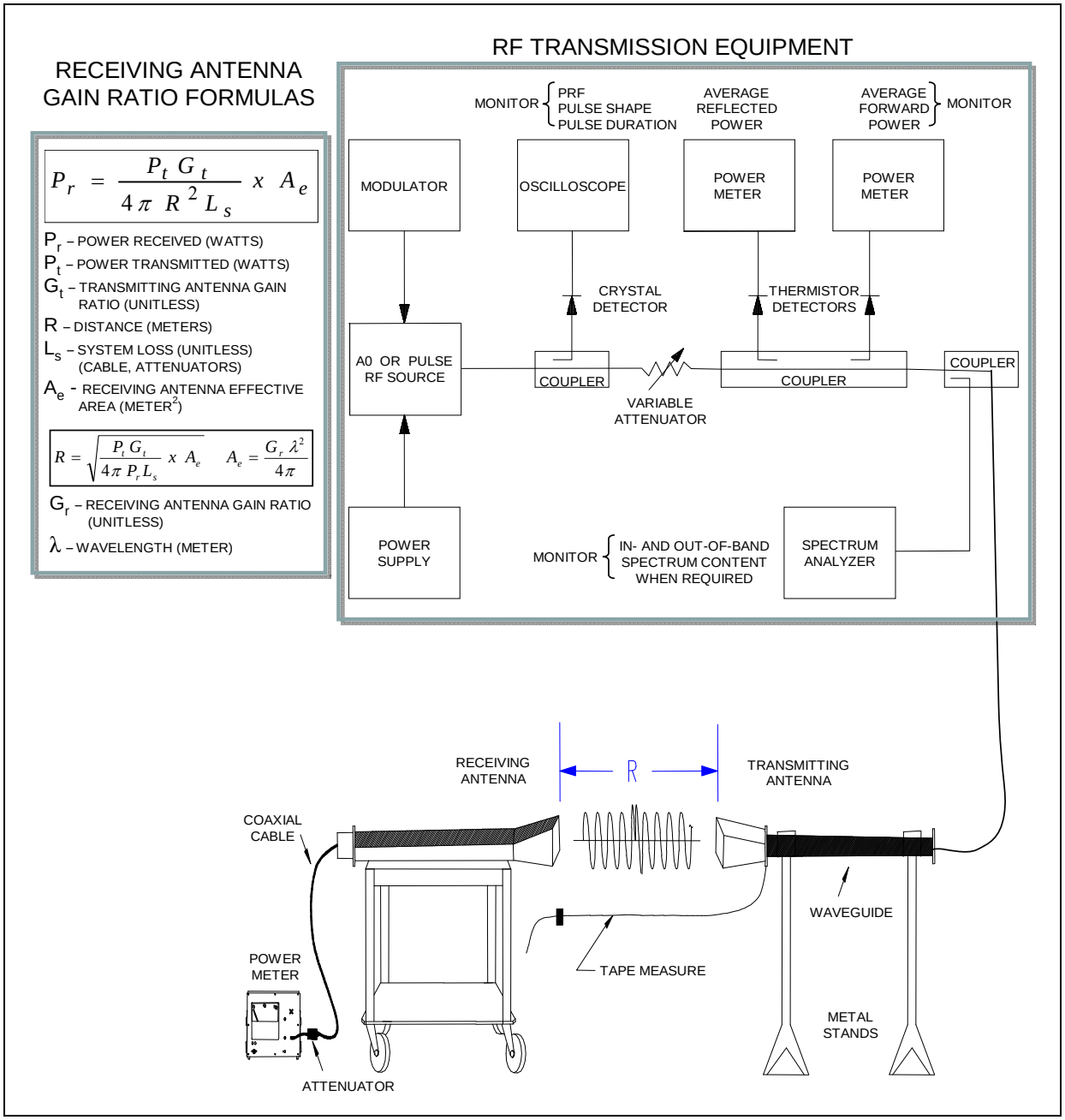

FIGURE 28. Field calibration technique above 225 MHz

6.3.3.5 Illumination Angles/Illumination Area

At microwave frequencies, radiation patterns are highly directional, and slight changes in illumination angles can have a pronounced effect on the response of the SUT. It is, therefore, very important to illuminate the item thoroughly from all aspect angles to determine maximum EID responses. As mentioned above, antennas that are readily re-positioned about the SUT are highly recommended to achieve complete illumination. Continuous painting of the SUT with

Source: https://assist.dla.mil -- Downloaded: 2017-02-28T10:07Z
Check the source to verify that this is the current version before use.

radiation is the only way to ensure that maximum responses are determined. Ideally, the item should be illuminated continuously in azimuth and elevation. Ordnance items attached to a large host platform/system should be illuminated over a 180-degree arc, directing the beam toward suspected entry points. See 5.5.1.3 for further guidance on illumination angles at microwave frequencies.

6.3.3.6 Polarization

Both vertical and horizontal polarizations should be used.

6.3.3.7 Modulations

Typically, the most severe EME levels above 225 MHz are generated by radar equipment. This is due to the extremely high peak and average power levels associated with this type of emitter. Both the choice of pulse modulation or CW formats depends on the type of radar being simulated. Surveillance and navigation radar typically are pulse-modulated, while illuminators and special-purpose radar utilize CW. Since the modulation parameters can influence the magnitude of interference to energized firing circuits or peak power-sensitive EIDs (for example, conductive composition electric primers and modulation formats) should be varied to determine minimum EME thresholds.

6.4 Maximizing Responses

6.4.1 Illumination Angles

For highly directional EM fields, emphasis should be placed on those illumination angles expected to maximize EID response at the predicted points of entry (POE); for example, exposed wiring, enclosure discontinuities, and exposed or poorly shielded cables. In the HF range, pretest current-ground measurements and (see 6.3.1.8.1) knowledge of "worst-case" HF antenna-host platform/system orientations should be taken into account. At microwave frequencies where the illumination angle is narrow, small changes can result in significantly different EID responses; thus, changes in pointing angle should be small and carefully controlled.

6.4.2 Frequency Increments

If detected responses are within 6 dB of the failure level, testing should be repeated at additional frequencies at $f_o \pm 0.01f_o$ in an effort to find the maximum response.

6.4.3 Stimulus Dwell Time

Changes in illumination angle and polarization should not exceed the response time of the EIDs. The optimum procedure, particularly at frequencies where the radiation pattern is highly directional, is to slowly paint the SUT, making small changes in the elevation and azimuth. This procedure should be conducted with continuous communication between the test personnel handling the transmitting antenna and those monitoring the EID responses. The illumination angle is thus controlled to emphasize those elevation/azimuth angles that maximize EID response. This procedure has two advantages: it improves the likelihood of finding the critical

Source: https://assist.dla.mil -- Downloaded: 2017-02-28T10:07Z
Check the source to verify that this is the current version before use.

illumination angles and it ensures that the item is exposed for a sufficient time to reach maximum response.

6.4.4 Communications

It is important to maintain continuous voice communication between EID-monitoring personnel and personnel controlling the transmit antenna illumination angle. As responses are observed, monitoring personnel can advise antenna controllers on optimum angles and polarization.

6.5 Non-Linear Effects

6.5.1 RF Arcing

RF arcs occur when two conductive objects under RF excitation are touched together or drawn apart. Therefore, arcing generally will occur in ordnance items during connection to the EID firing circuit, interruption of the firing circuit, or during any contact to the circuit by a conductive object. Under actual or test conditions, arcing will not occur at all frequencies, but will be dependent upon the particular antenna-ordnance item coupling involved. RF arcs contain energy components over a wide spectrum of frequencies. The arc output is normally an audio frequency (af) superimposed on a dc component. The polarity of the dc signal and the relative amplitude of the af and dc signals primarily are dependent upon the material composition of the conductive objects that form the electrodes and the RF field strength. Because of the non-linear nature of RF arcs and the fact that they generally occur in the HF and VHF frequency bands, HERO test results obtained in these bands are limited to the extrapolation levels in 7.6.1 or the test field strengths. It is, therefore, extremely important that all HERO tests in HF and VHF bands be conducted at the required MIL-STD-464 EME levels or at maximum available field strengths. Figure 29 is a photograph showing an RF arc generated during a HERO test.

Source: https://assist.dla.mil -- Downloaded: 2017-02-28T10:07Z
Check the source to verify that this is the current version before use.

FIGURE 29. RF arc generated during HERO testing

6.5.2 Energized Circuit Susceptibility

HERO assessments of EIDs in power-off, linear-firing circuits under non-arcing conditions are straightforward and subject to the test methods and instrumentation described previously in this handbook. HERO tests of non-linear, energized EID circuits, however, present unique challenges in test methods, instrumentation, interpretation of test results, and assessment of margins. There are two basic types of non-linear EID firing circuits, those that have power available in the circuit but should have a triggering signal applied before the EID firing circuit is activated, and those that have power and firing signal applied simultaneously. HERO tests that involve non-linear electronic EID initiating devices, therefore, need to consider the potential HERO susceptibilities in both linear and non-linear firing circuits. HERO evaluation of both the classical and EMV aspects of non-linear EID firing devices require an integration of HERO and EMV instrumentation and test techniques. The integrated method approach is necessary because neither the HERO nor EMV techniques alone will fully evaluate the potential susceptibilities. Margins for assessing the classical HERO response are as described previously in this handbook. Margins for active circuit upset, considered as safety critical and mission critical, should have at least a 6 dB margin

As with classical HERO tests, great care should be exercised when designing tests of non-linear EID firing devices to avoid using instrumentation or techniques that will alter the response of the SUT, thereby giving erroneous test results. Due to the non-linear aspects of electronic firing circuits, it is imperative that all HERO tests involving such circuits be conducted at the required MIL-STD-464 HERO levels or at maximum available field strength levels.

Source: https://assist.dla.mil -- Downloaded: 2017-02-28T10:07Z
Check the source to verify that this is the current version before use.

6.6 Susceptibility Investigation

6.6.1 Identifying POEs

All current HERO instrumentation systems provide for real-time observation of the EID data during the test. With proper communications established between the EID monitoring personnel and the transmit antenna controllers, as discussed in 6.4.4, identification of the POEs is a relatively simple task. Once the induced current in the EID of interest has been maximized by adjusting the transmit antenna aspect angles and polarization, trial and error shielding techniques in the form of aluminum foil or tape, can be applied to cables and other apertures in the ordnance in order to reduce the coupling and thereby allowing for the identification of the entry points for the EM energy.

6.6.2 Fix Development and Verification

Fixes for demonstrated HERO deficiencies generally fall into the categories of filtering, shielding, bonding, grounding, or a combination of both. There are many excellent design guides that discuss the subject in great detail, such as NAVSEA OD 30393 and AD 1115. It is recommended that the HERO test engineer become familiar with several EMC design guides and implement the techniques described. Such a familiarity will allow the engineer to aggressively pursue the proper fix for any and all HERO problems that may arise.

7. DATA ANALYSIS

7.1 Introduction

In order to draw conclusions and make recommendations from the results of a HERO test, the test data should be presented in a format that supports the test objectives clearly and concisely. Typically, the raw test data consist of the magnitudes of induced current, voltage, or power onto the EID during the conduct of the test procedures. The raw test data in original form are insufficient for the evaluation of the test results. Other parameters, such as EME test field, EME criteria, resistance of the EID bridgewire, EID MNFS, and the firing consequence factor (FCF), should be processed with the raw test data. The results then are converted into a format that supports the conclusions and recommendations drawn from the test data. This section details the process necessary to accomplish the data analysis. The process is basically a three-step procedure consisting of the following:

a. Converting the EID response at the EME test level into the EID response at the criteria EME level,

b. Converting the EID response at the criteria EME level into the MAE, and

c. Determining a single MAE level for each frequency band of the specified criteria EME in each of the S4 phases.

Source: https://assist.dla.mil -- Downloaded: 2017-02-28T10:07Z
Check the source to verify that this is the current version before use.

7.2 Detected Responses

EID responses usually are quantified in terms of induced current (I_i). In some cases, the response may be indicated in terms of induced voltage (V_i) or absorbed power (P_i). Since the pass/fail and EID no-fire criteria most often are expressed with respect to the MNFC, the absorbed power measurement should be converted from power to current, which requires knowledge of the resistance of the bridgewire. Thus, the response of the EID in absorbed power can be converted into induced current by taking the square root of the ratio of the absorbed power to the resistance of the bridgewire of the EID (R_{EID}). In the case of induced voltage, the pass/fail criterion is expressed with respect to the maximum no-fire voltage and can be determined in the same manner as the induced current. Therefore, for the purposes of this handbook, only the calculations for determinations of the induced current will be presented since the calculations for the induced voltage or absorbed power can be determined easily.

7.3 Undetected Responses

In many instances, there are no detected responses due to limitations on the test EME levels or instrumentation sensitivity. In these cases, subsequent data analysis assumes a response at the instrumentation system's MDC level.

7.4 Pass/Fail Criteria (Required Margins)

In order to pass the HERO requirements of MIL-STD-464, an ordnance item's EIDs should maintain safe and reliable margins of protection against EM-induced currents when exposed to the radiated EME levels that are expected to be encountered during its S4. In order to get a HERO classification of "HERO SAFE ORDNANCE" at the all-up round or appropriate assembly level, the ordnance or system under test (SUT) should be evaluated against, and be in compliance with HERO EME levels of MIL-STD-464. An analysis of the HERO test data will, therefore, form the basis for determining if the ordnance item has met these margin requirements. Consequently, the test data should be analyzed for each test procedure conducted to determine if the requirements are met. These requirements are based on two possible consequences of the unintentional initiation of any EID in the ordnance.

7.4.1 Firing Consequence Factors (FCFs)

The 16.5 and 6 dB HERO margin values defined in MIL-STD-464 are referred to as FCFs.

a. To avoid safety consequences, no more than 15 percent (16.5 dB margin) of the MNFC of EIDs within ordnance should be measured during any authorized test procedure.

b. To avoid performance degradation, no more than 50 percent (6 dB margin) of the MNFC of EIDs (or 50 percent of the MNDC for EIDs) within ordnance should be measured during any authorized test procedure.

Source: https://assist.dla.mil -- Downloaded: 2017-02-28T10:07Z
Check the source to verify that this is the current version before use.

7.5 Conversion to EID Response at Criteria EME Level

Upon measurement of the EID response at the test EME level (induced current, I_i), the data should be converted into the EID response at the criteria EME level (criteria induced current, I_c). The EID response at the criteria EME level (I_c) is calculated by multiplying the induced current (I_i) by the ratio of the criteria EME level (E_c) to the test EME level (E_t). The equation below presents this calculation. It should be noted that extrapolation of the EID-induced current to the EID response at the criteria EME level is limited to the extrapolation limits detailed in 7.6.1.

$$I_c = I_i(E_c / E_t)$$

7.5.1 Determination of Pass/Fail

The calculation of the EID response at the criteria level allows for determination of pass/fail of the EID at all test frequencies. The EID response at the criteria level is compared to the EID pass/fail level ($I_{p/f}$) to determine pass/fail of the EID at a given frequency. The EID pass/fail level is determined as shown in the equation below. If the EID response at the criteria level exceeds the EID pass/fail level, then the EID is considered a "fail" at that specific frequency. If the EID response at the criteria level is less than or equal to the EID pass/fail level, then the EID is considered a "pass" at that specific frequency. Each frequency band then can be evaluated to determine the pass/fail status by evaluation of the pass/fail status of the EID at each frequency within the individual frequency band. For ordnance that contains multiple EIDs, the pass/fail status of each frequency band then should consider the cumulative pass/fail status of all the EIDs at each frequency band.

$$I_{p/f} = (FCF_d)\ (MNFC)$$

where:

$I_{p/f}$ = EID pass/fail level
FCF_d = -FCF as a decimal ratio (0.15 for a safety item or 0.50 for a reliability item), and
MNFC = Maximum no-fire current of EID.

7.5.2 Determination of P/FM

The P/FM of the EID is a dB comparison of the maximum levels of the induced currents to the allowable levels of induced currents in the EID at each test frequency. The P/FM is determined by either of the following equations:

$$P/FM = 20 \log (MNFC / I_c)$$

If the P/FM of the EID is less than the FCF, then the EID is considered a "fail" at that specific frequency. If the P/FM of the EID is greater than or equal to the FCF, then the EID is considered a pass at that specific frequency. Each frequency band then can be evaluated to determine the pass/fail status by evaluation of the P/FM of the EID at each frequency within the individual

Source: https://assist.dla.mil -- Downloaded: 2017-02-28T10:07Z
Check the source to verify that this is the current version before use.

frequency band. For ordnance that contains multiple EIDs, the P/FM of each frequency band then should consider the cumulative P/FM of all the EIDs at each frequency band.

7.6 Conversion to MAE

The MAE is limited by the guidance detailed in 7.6.1 and determined by tests at all frequencies of interest to which the ordnance can be exposed without degrading its safety or reliability. The MAE at a given frequency is a calculated field strength at which the current induced in the EID is equal to the MNFC of that EID, reduced by the appropriate FCF. The MAE is calculated using the following equation:

$$MAE = E_t (I_{p/f} / I_i)$$

where:

MAE = Maximum allowable environment (V/m),
E_t = Test EME level (V/m),
$I_{p/f}$ = EID pass/fail level (mA), and
I_i = EID-induced current measurement (mA).

If no response is measured during testing, use the MDC as I_i. It should be noted that the criteria EME level (E_c) can be substituted for the test EME level only if the EID response at the criteria EME level (I_c) is substituted for the EID-induced current measurement (I_i).

7.6.1 Extrapolation Limits

At many EM test facilities, criteria EME test levels cannot be generated over all required frequency ranges. Additionally, it is desirable to determine the maximum level to which an ordnance item can be safety-certified based upon the test data in order to facilitate the safe handling of the item in higher environments, should the need arise in the future. A commonly accepted practice is to measure the response of the EIDs at the maximum field strength capability of the test facility and extrapolate those measurements to determine the MAE. In order for this extrapolation to be valid, the following applies:

a. The instrumentation should be sensitive enough so that its minimum detectable current (MDC), when increased by the ratio of the required field to the test field, is still less than the no-fire characteristics of the EID reduced by the appropriate FCF from 7.4.1. Additionally, when responses are less than the MDC level, extrapolation of this value should not exceed a factor of five.

b. There should be some reasonable evidence that the EM responses of the ordnance system EID circuits are linear in the region between that at which the measurements are made and to that which the measurements are to be extrapolated.

Source: https://assist.dla.mil -- Downloaded: 2017-02-28T10:07Z
Check the source to verify that this is the current version before use.

If both of these conditions are met, HERO test data can be gathered at levels readily available at most test facilities and extrapolated to higher levels. It has been determined that there needs to be some reasonable limit on the extrapolation and hence the level reported in the test report. (See 8 and Appendix A.). Table VIII presents the limits beyond which MAE extrapolation is considered invalid.

7.7 Determination of MAE per Frequency Band

Upon determination of the individual MAE for each EID at each test frequency, the MAE for the individual frequency bands can be established. The MAE for each frequency band is established by reviewing the MAE of each EID at each individual frequency within the bounds of the frequency band. The MAE for that particular frequency band then is set at the lowest MAE of these individual MAEs. For example, assume the ordnance item tested contains two EIDs. At 18 MHz, the MAE for EID 1 is 100 V/m and the MAE for EID 2 at 4 MHz is 50 V/m. The MAE for this ordnance item in the 2 to 30 MHz frequency band should be reported as 50 V/m.

TABLE VIII. MAE extrapolation limits

Frequency (MHz)	MAE Extrapolation Limit (V/m Average)	
	Handling & Loading Assembly/Disassembly Phases[1]	All Other Stockpile-To-Safe Separation Phases
2-30	25[2]	1000
30-150	50	1000
150-225	100	1000
225-400	100	1000
400-700	100	3000
700-790	100	3000
790-1000	200	3000
1000-2000	200	3000
2000-2700	200	3000
2700-3600	200	3000
3600-4000	200	3000
4000-5400	200	3000
5400-5900	200	3000
5900-6000	200	3000
6000-7900	200	3000

Source: https://assist.dla.mil -- Downloaded: 2017-02-28T10:07Z
Check the source to verify that this is the current version before use.

TABLE VIII. MAE extrapolation limits - Continued

Frequency (MHz)	MAE Extrapolation Limit (V/m Average)	
	Handling & Loading Assembly/Disassembly Phases[1]	All Other Stockpile-To-Safe Separation Phases
7900-8000	200	3000
8000-8400	200	3000
8400-8500	200	3000
8500-11000	200	3000
11000-14000	200	3000
14000-18000	200	3000
18000-50000	200	3000

NOTES:
1. Time averaging may be required. (See table IV.)
2. Limited to 25 V/m or the actual test EME level, whichever is greater.

8. DOCUMENTATION

8.1 Introduction

When it is necessary for contractors to obtain the data to show compliance with the requirements of MIL-STD-464, the following data item descriptions (DIDs) should be listed on the Contract Data Requirements List (DD Form 1423), except where the DoD Federal Acquisition Regulation Supplement exempts the requirement for a DD Form 1423.

DID Number	DID Title
DI-EMCS-81540B	Electromagnetic Environmental Effects (E3) Integration and Analysis Report
DI-EMCS-81541B	Electromagnetic Environmental Effects (E3) Verification Procedures
DI-EMCS-81542B	Electromagnetic Environmental Effects (E3) Verification Report

For all other situations, the data may be prepared in accordance with Appendix A.

8.2 Purpose of Test Documentation

Test documentation incorporates the total assimilation of a test program. Without proper documentation, a full test program could be forfeited. The test plan lays the groundwork for accomplishing the mission of HERO certification/compliance. All the minute details for conducting the test should be captured here. The substance of the HERO test program resides in adherence to the test procedures during the test and in the data collection process. Faithful

Source: https://assist.dla.mil -- Downloaded: 2017-02-28T10:07Z
Check the source to verify that this is the current version before use.

execution of the test procedures and explicit data collection will bring the test goals into focus and lead to a successful completion of the test mission. The test report unifies the goals and objectives by summing up the test data into viable conclusions and recommendations, thus finalizing the process.

9. NOTES

9.1 Intended Use

This handbook can be used by any facility engaged in HERO testing for any of the military departments.

9.2 Supersession Data

Not applicable.

9.3 Cross-Reference of Classifications and Substitutability Data

Not applicable.

9.4 Subject Term (Keyword) Listing

E3
Electromagnetic
Electromagnetic Compatibility
Electromagnetic Environmental Effects
Electromagnetic Radiation Hazards
EMC
Hazards of Electromagnetic Radiation to Ordnance
HERO

9.5 Identification of Changes

Not applicable.

Source: https://assist.dla.mil -- Downloaded: 2017-02-28T10:07Z
Check the source to verify that this is the current version before use.

9.6 Technical Points of Contact

Requests for additional information or assistance on this standard can be obtained from the following:

Air Force

Air Force Seek Eagle Office
ATTN: Dr. Michael Johnson
205 West D Avenue, Suite 348
Eglin AFB, FL 32542-6865
(850) 882-0970
michael.johnson.10@us.af.mil

Army

Test and Evaluation Command (ATEC)
Developmental Test Command (DTC)
E3 Test Branch (E3 for Missile System Functions)
ATTN: TEDT-RT-E-EM (Mr. J. Craven)
Building 8975
Redstone Arsenal, AL 35898-8052
(256) 842-2952
Jeffery.D.Craven@us.army.mil

Navy

Commander, Dahlgren Division
Naval Surface Warfare Center
ATTN: Q52/Mr. R. Magrogan
5389 Bronson Road, Suite 165
Dahlgren, VA 22448-5153
(540) 653-3445
Richard.Magrogan@navy.mil

Joint Spectrum Center

DISA/JSC
ATTN: J5/Mr. M. Grenis
2004 Turbot Landing
Annapolis, MD 21402-5064
(410) 293-9264
matthew.grenis@jsc.mil

Any information relating to Government contracts should be obtained through contracting officers.

Source: https://assist.dla.mil -- Downloaded: 2017-02-28T10:07Z
Check the source to verify that this is the current version before use.

DOCUMENTATION

A.1 Introduction

This appendix provides guidance for the preparation of documentation associated with the HERO test program.

A.2 Test Plan

The test plan is the foundation upon which the entire HERO test program is constructed. The hallmark of a well-written test plan is that it will allow any HERO test organization to accomplish the required evaluations with a minimum of interpretation and confusion, regardless of the organization that created it. In order to accomplish the goals of the test plan, the contents of the plan should be cogent and easily understood. The outline of the test plan should be as follows, with each described in A.2.3:

a. Front cover,
b. Table of contents,
c. Glossary,
d. Main body section,
e. Appendices, and
f. Distribution.

A.2.1 Main Body Sections

The main body of the plan should include the following sections, with the content for each detailed in A.2.3:

1.0 Introduction,
2.0 Background,
3.0 Purpose,
4.0 Scope,
5.0 Ordnance item description,
6.0 Ordnance item test configuration,
7.0 Test instrumentation,
8.0 Description of HERO test facility,
9.0 Description of test environments,
10.0 Description of test item's S4 phases,
11.0 Pass/fail criteria,
12.0 Test management requirements,
13.0 Test support personnel,
14.0 Ordnance item (manufacturer) support,
15.0 Test ground support equipment,
16.0 Hardware assets,
17.0 Test schedule,
18.0 Test reporting,

Source: https://assist.dla.mil -- Downloaded: 2017-02-28T10:07Z
Check the source to verify that this is the current version before use.

19.0 Safety precautions and SOPs, and
20.0 References.

A.2.2 Appendices

The following appendices should be included, with the contents of each described in A.2.3.5:

A - Test schedule,
B - Detailed description of test configuration(s),
C - Test environments,
D - Test procedures, and
E - Instrumentation.

A.2.3 Test Plan Contents

A.2.3.1 Front Cover

The front cover of the test plan should include the following information:

a. Title of the document;
b. Month and year of publication;
c. Name(s) of the principal author(s) in conventional order (Prepared by:);
d. Name and location of the test agency;
e. Program office or test sponsor's name and address (Prepared for:);
f. Distribution statements, as required; and
g. Security classification markings, as required.

A.2.3.2 Table of Contents

The table of contents should list each major section and sub-heading of the test plan with the appropriate page numbers. A list of illustrations and tables may be included immediately following the Table of Contents.

A.2.3.3 Glossary

Inclusion of a glossary or list of acronyms will ensure that the reader is familiar with the context of the terms used in the plan. All acronyms, brevity codes, short titles, and abbreviations used in the plan are listed alphabetically with an explanation of their meaning.

A.2.3.4 Main Body Sections

Source: https://assist.dla.mil -- Downloaded: 2017-02-28T10:07Z
Check the source to verify that this is the current version before use.

A.2.3.4.1 Introduction

The Introduction paragraph provides a brief synopsis of the HERO concerns within DoD and the need for a program to address the issues. It also informs the reader as to why HERO is an important safety/reliability issue.

A.2.3.4.2 Background

The Background paragraph provides general information about the ordnance item under test and includes a brief description of the ordnance item, its mission, configuration, S4, and program sponsor.

A.2.3.4.3 Purpose

The Purpose paragraph provides the overall test objectives and should state if the test is a full-scale HERO evaluation test or a HERO developmental test. Unlike a full-scale evaluation test, developmental tests are designed only to evaluate an existing or proposed EMI fix, or to assess certain special operational deployment phases or configurations. Developmental tests are not a substitute for a full-scale evaluation test. This paragraph also should reference any standards, specifications, or requirements that are applicable.

A.2.3.4.4 Scope

The Scope paragraph should present the overall concept of the test including the location(s), duration, schedule, number of test items, and so forth. Sufficient detail should be cited to allow the reader to clearly understand the extent of the testing. Special test considerations, such as known limitations, should be addressed. In addition, the following subjects should be briefly discussed:

a. Test configuration(s);
b. Phases of the S4 to be tested,;
c. Reference sources for authorized test procedures;
d. Test environments;
e. EIDs to be tested;
f. Operational states during the test (that is, powered or non-powered) with respect to the S4 phases; and
g. Quality assurance plans.

A.2.3.4.5 Ordnance Item Description

The ordnance item description is derived from its specification or other source documents. It should describe the item in terms of function, technical parameters, physical characteristics, mission, and S4. If the ordnance item consists of several major components or sections, identify these and describe each. If the test item differs in major areas from previously tested items, describe the differences. If literature on the item exists, include appropriate extracts from the descriptive literature and cite the reference number or title. Ensure that the manufacturer's

Source: https://assist.dla.mil -- Downloaded: 2017-02-28T10:07Z
Check the source to verify that this is the current version before use.

performance claims are not included as facts in the description. Listing physical characteristics or specification requirements rather than performance claims is advisable. The description of the ordnance item should permit a full understanding of the item's function and intended mission. Include diagrams, line drawings, or photographs. Identify all applicable launch platforms/ systems and describe each of the item's S4 phase configurations.

A.2.3.4.6 Ordnance Item Test Configuration

This paragraph should describe the ordnance items procured for the test. The description should include details on the version or model to be tested; for example, production, pre-production, pilot production, tactical, exercise, and telemetry. Describe how the ordnance item and its EIDs will be rendered inert. In addition, provide a brief description on how the test item will be modified in order to accomplish the instrumentation.

A.2.3.4.7 Test Instrumentation

Briefly describe the type of EID instrumentation to be utilized; that is, thermocouples, vacuum thermocouples, and so forth. Identify the types of data recorders, amplifiers, and data transmission lines. The detailed description of the instrumentation system and EID data will be included in Appendix E of the plan.

A.2.3.4.8 Description of HERO Test Facility

Describe the test facility in terms of physical properties and capabilities. Identify the EM transmitters and antennas and their capability to establish the test environments in both the near and far fields. Describe the physical properties of the facility, such as open-air ground plane, anechoic chamber, screen room, and so forth. Identify any unique test equipment or fixtures that will be available for the test.

A.2.3.4.9 Description of Test Environments

This paragraph should briefly discuss the test EME levels. The test frequency lists, including modulations and polarizations, the test antenna locations relative to the test item, the maximum MPE levels, the applicable MIL-STD-464 HERO EME levels or the tailored field strength for each frequency, and S4 phases to be tested are furnished in Appendix C of the plan. If tailoring of the test environments has occurred, the specific rationale for the tailored levels should be detailed. This will allow the evaluating activity information to determine any subsequent tests in order to satisfy a new user of that ordnance item.

A.2.3.4.10 Description of Test Item's S4 Phases

All of the test item's S4 phases should be identified. The particular phases to be tested should be decided upon prior to writing the test plan to ensure that the entire life-cycle sequence is understood, and that the proper ordnance test configurations are delineated in the test plan. This paragraph should address the S4 in detail, provide the rationale for selecting the phases to be tested, and explain why other phases were not selected. The test procedures should be described

Source: https://assist.dla.mil -- Downloaded: 2017-02-28T10:07Z
Check the source to verify that this is the current version before use.

in sufficient detail to allow the reader to understand exactly what will occur during the test. Test operations procedures, including international or MIL-STDs, should be referenced. Describe in detail how to conduct the test so that another test facility with knowledge in the testing of such materiel can follow the procedures and successfully conduct the test. Specify the data that will be required to conduct the test, the process for acquiring it, and its justification. Describe how the test item will be operated or exercised, making reference to the applicable appendix, or the conditions to which it will be exposed in order to conduct the test.

A.2.3.4.11 Pass/Fail Criteria

This paragraph states the test evaluation criteria and references the applicable HERO EME levels in MIL-STD-464. State the criterion verbatim from the source. State source and paragraph in parenthesis following each criterion. A qualified safety engineer, prior to the test, should determine the consequence of inadvertent function/operation of each EID in the ordnance item. State the applicable firing consequence factor for each of the test item's EIDs. The HERO margins are derived from a percentage of the established EID MNFC. These margins should be included and references made to their definition.

A.2.3.4.12 Test Management Requirements

Identify the test engineer assigned the responsibility for conducting the evaluation. Include his/her telephone number and e-mail address.

A.2.3.4.13 Test Support Personnel

Identify the personnel who will operate and maintain the ordnance item during the test effort, such as soldiers, sailors, or airmen, personnel from the program office, contractor personnel, or test facility personnel trained in the operation and maintenance of the item. Identify facility test personnel who will operate and maintain transmitting and instrumentation equipment during the test.

A.2.3.4.14 Ordnance Item (Manufacturer) Support

Occasionally, a manufacturer’s support is required to disassemble, assist in instrumentation, and reassemble the ordnance item for HERO testing. If manufacturer support is required, list the names of the facility, manufacturer's designated representative(s), and all applicable telephone numbers and E-mail addresses.

A.2.3.4.15 Test Ground Support Equipment

Ground support equipment may be required for some HERO tests. List all support equipment that will be required for the evaluation and give the availability, source(s), and required-by date for all equipment to be procured off-site.

Source: https://assist.dla.mil -- Downloaded: 2017-02-28T10:07Z
Check the source to verify that this is the current version before use.

A.2.3.4.16 Hardware Assets

List all hardware assets other than ground support equipment that will be requisitioned for the test. Give sources and required-by dates for all hardware assets. Hardware assets include, but are not limited to ordnance hardware, EIDs, special tools, material handling equipment, and special test support fixtures.

A.2.3.4.17 Test Schedule

Briefly discuss the test schedule and note that a detailed schedule is presented in Appendix A.

A.2.3.4.18 Test Reporting

A report detailing the results, conclusions, and recommendations should be issued by the test activity within a specified number of days from the end of the test data analysis. (See A.3.)

A.2.3.4.19 Safety Precautions and Standard Operating Procedures

Reference all applicable safety precautions that are in the operational documents from which the test procedures were derived. Reference locally generated SOPs that will be in effect for the HERO test. Always include procedures to preclude personnel safety issues from EM environments during the test.

A.2.3.4.20 References

List all documents in the order in which they were mentioned in the test plan. Include date and revision of the referenced document.

A.2.3.5 Appendices

The appendices include all the ancillary information pertaining to the test, such as test schedule, test environments, references, abbreviations, test procedures, test item configuration, test instrumentation, and the document distribution list.

A.2.3.5.1 Appendix A - Test Schedule

Provide a realistic schedule of the test effort to ensure efficient programming and utilization of resources. Front-load any tests that will provide input for the safety release. Prepare an incremental test schedule that presents an estimate of the net testing time in a Gantt chart format.

Source: https://assist.dla.mil -- Downloaded: 2017-02-28T10:07Z
Check the source to verify that this is the current version before use.

Specific milestones for a HERO test schedule might include the following:

a. Receipt of all test hardware items,
b. Receipt of all test documentation,
c. Fabrication of test fixtures,
d. Instrumentation of the EIDs,
e. Instrumentation of the test item,
f. Calibration of the instrumentation,
g. Testing duration (actual dates),
h. Test report, and
i. Return of test assets.

A.2.3.5.2 Appendix B - Detailed Description of the Test Configuration

Include a form in Appendix B that identifies the applicable test ordnance configuration/life-cycle phases, platform/system(s), ordnance item, component/subsystem, launcher, aircraft interface cabling, ancillary equipment, and EID parameters. Present the EID parameters in the following format (see table A-I):

TABLE A-I. EID identification/characteristics

EID Ref. No.	Function	DoDIC	NSN	Part No.	MNFC (amps)	Resistance (ohms)	Firing Effects
A-1	Parachute Deploy Rocket	MT29	1377-01-246-5279	MK 122 Mod 0	1.0	0.9-1.3	Safety

A.2.3.5.3 Appendix C - Test Environments

Describe, in general terms, the equipment and facilities that will be used to create the test EM environment. Make reference to the figures and tables in Appendix C that have detailed descriptions of the equipment and facilities.

A.2.3.5.4 Appendix D - Test Procedures

Indicate the applicable procedures for each of the S4 phases/configurations. These procedures are delineated in the operational or technical manuals for the ordnance and are presented in Appendix D of the test plan as test procedures. The test procedures may be written verbatim from the technical documents or revised or abbreviated for use during the HERO test. It is very important to ensure that the test procedures are an accurate replication of the authorized operational procedures that will be utilized on the battlefield or onboard ship, and that all responsible parties agree to them. Include procedures for each ordnance item/section and its S4 configuration. Number the procedures in terms of test points so that the test data can be identified relative to the test point being addressed. Occasionally, to expedite testing, the

Source: https://assist.dla.mil -- Downloaded: 2017-02-28T10:07Z
Check the source to verify that this is the current version before use.

procedures can be changed slightly or consolidated due to the knowledge gained from repeated tests of the item. If changes are made in the test procedures during the test, document the changes and specify the reason for changes in the test report. If there are any doubts on the operational validity of the changes, contact the originators of the technical manuals and discuss the changes to achieve concurrence prior to adoption.

A.2.3.5.5 Appendix E - Instrumentation

Identify the EIDs that will be instrumented and monitored during the test and describe the type of sensors and instruments that will be used to gather the test data. Describe the calibration process and identify the group that will be responsible for the instrumentation.

A.3 Test Report

The main purpose of the test report is to document the results of the test and present the conclusions and recommendations drawn from the test data in a clear and concise manner. The contents of the test report will include an updated test plan, as well as test results, a discussion of the test results, conclusions and recommendations based on the test results, test data, and photographic documentation of the test item and a sample test setup. The outline of the test report should be as follows, with each described in A.3.2:

a. Front cover,
b. Table of contents,
c. Glossary,
d. Main body section,
e. Appendix, and
f. Distribution.

A.3.1 Main Body Sections

The main body of the report should include the following paragraphs, with the content for each detailed in A.3.3:

1.0 Introduction,
2.0 Background,
3.0 Purpose,
4.0 Scope,
5.0 Test results discussion,
6.0 Conclusions,
7.0 Recommendations,
8.0 References, and
9.0 Appendix.

Source: https://assist.dla.mil -- Downloaded: 2017-02-28T10:07Z
Check the source to verify that this is the current version before use.

A.3.2 Test Report Contents

A.3.2.1 Front Cover

The front cover of the test report should be similar to the format for the test plan. (See A.2.3.1.)

A.3.2.2 Table of Contents

The table of contents should list each major paragraph and sub-heading of the test plan with the appropriate page numbers. A list of tables and figures may be included immediately following the table of contents.

A.3.2.3 Glossary

A glossary or list of acronyms is suggested to ensure that the reader is familiar with the context of the terms being used.

A.3.3 Main Body Sections

A.3.3.1 Introduction

Same as test plan; update as necessary.

A.3.3.2 Background

Same as test plan; update as necessary.

A.3.3.3 Purpose

Same as test plan; update as necessary.

A.3.3.4 Scope

Same as test plan; update as necessary.

A.3.3.5 Test Results Discussion

Present, in abbreviated form, the significant findings that will give the reader an understanding of the outcome of testing without reading the entire report. Include any technical judgments that should be highlighted to the executive reader and reference test specifics in the appendix on test results.

A.3.3.6 Conclusions

State the conclusion that the test item either meets or fails to meet the applicable margins of MIL-STD-464 for reliability/safety during exposure to the criteria environments in all S4 phases.

Source: https://assist.dla.mil -- Downloaded: 2017-02-28T10:07Z
Check the source to verify that this is the current version before use.

A.3.3.7 Recommendations

Based on the test results, provide recommendations to the test sponsor or program office whether the test item should be considered as Safe and Reliable when exposed to the environments of MIL-STD-464. If the test item did not meet the HERO requirements of MIL-STD-464, recommend appropriate restrictions on the use of the item. In addition, list all known current versions of the ordnance item, along with all applicable platform/systems and launchers by NSN, DOCIC, NALC, or other identifiers and make recommendations as to the suitability of each to meet the requirements of MIL-STD-464.

A.3.3.8 References

List all applicable references. Always include MIL-STD-464.

A.3.3.9 Appendix

The appendix should include the EID summary tables and the test results tables. The use of standard forms, data sheets, or questionnaires is encouraged. A sample test results sheet is included in table A-II. HERO test data presented in the appendix should include, but not be limited to, the following:

a. Test item nomenclature: name, DoDIC, NSN (this will be necessary for JOERAD entry);
b. Serial number(s) of test item;
c. Model number(s) of test item;
d. Test and instrumentation calibration data;
e. Modification(s) to test item;
f. Hardware configuration/S4 phases;
g. All test item problems/failures;
h. Results of all pretest, post-test, and other inspections of the test item;
i. Facilities and hardware utilized for the test;
j. Still photographs/diagrams of the test set-up;
k. Still photographs/diagrams of the test instrumentation; and
l. Classification of each EID as a safety or reliability consequence.

Detailed data requirements for each HERO test run include, but are not limited to, the following:

a. Test run number;

b. Test frequency;

c. Configuration of the test item, including orientation to the radiating antenna;

d. EME desired and achieved, including electric field strength in V/m or mW/cm^2, polarization, modulation, and MAE levels (measured or extrapolated);

e. EME-induced current or voltage in the EID;

Source: https://assist.dla.mil -- Downloaded: 2017-02-28T10:07Z
Check the source to verify that this is the current version before use.

f. Reaction to the EME;

g. Calculation of the test margin/criterion relative to the MNFC; and

h. Test observations/comments noted during the test.

TABLE A-II. Sample test results sheet format

SYSTEM: Joint Direct Attack Munition (JDAM)
DoDIC/NALC: NOT YET ASSIGNED
PLATFORM: F/A-18
LAUNCHER: BRU-32 Bomb Rack
STATION: 8
SYSTEM COMPONENT: FMU-139A/B Fuze
S4 PHASE(s) TESTED: Tests I and II - Staged and Storage
TEST RUN NO.: P12

Freq Range (MHz)	Test Freq (MHz)	Test EME (V/m)	Criteria EME* (V/m)	EID ID	Firing Effects	Extrapolation Factor	Test % MNFC	MIL-STD-464 % MNFC
2-30	18.38	194	200	MK 20 BA**	Reliability	1.03	5.1	5.25

* Site-applicable EME (for example, MIL-STD-464)
* Bellows Actuator

Source: https://assist.dla.mil -- Downloaded: 2017-02-28T10:07Z
Check the source to verify that this is the current version before use.

CONCLUDING MATERIAL

Custodians:
Army – SY
Navy - SH
Air Force – 11
DISA – DC5

Preparing Activity:
DISA (DC5)
(Project EMCS-2011-003)

Review Activities:

Army - AC, AM, AR, AT, AV, CE, CR, GL, MD, MI, PT, TE
Navy – AS, CG, EC, MC, OS, YD
Air Force - 13, 19, 22, 84, 99
DTRA - DS

NOTE: The activities listed above were interested in this document as of the date of this document. Since organizations and responsibilities can change, you should verify the currency of the information above using the ASSIST Online database at https://assist.daps.dla.mil.

Source: https://assist.dla.mil -- Downloaded: 2017-02-28T10:07Z
Check the source to verify that this is the current version before use.