The documentation and process conversion measured necessary to comply with this revision shall be completed by 3 July 2012.

INCH–POUND
MIL–STD–750–1
3 January 2012
SUPERSEDING
MIL–STD–750E (IN PART)
20 November 2006
(see 6.4)

DEPARTMENT OF DEFENSE

TEST METHOD STANDARD

ENVIRONMENTAL TEST METHODS FOR SEMICONDUCTOR DEVICES

PART 1: TEST METHODS 1000 THROUGH 1999

AMSC N/A

FSC 5961

Source: https://assist.dla.mil -- Downloaded: 2016-12-05T07:38Z
Check the source to verify that this is the current version before use.

FOREWORD

1. This standard is approved for use by all Departments and Agencies of the Department of Defense.

2. This entire standard has been revised. This revision has resulted in many changes to the format, but the most significant one is the splitting the document into parts. See MIL–STD–750 for the change summary.

3. Comments, suggestions, or questions on this document should be addressed to: Commander, Defense Logistics Agency, DLA Land and Maritime, ATTN: VAC, P.O. Box 3990, Columbus, OH 43218–3990, or emailed to semiconductor@dla.mil. Since contact information can change, you may want to verify the currency of this address information using the ASSIST Online database at https://assist.daps.dla.mil.

Source: https://assist.dla.mil -- Downloaded: 2016-12-05T07:38Z
Check the source to verify that this is the current version before use.

CONTENTS

PARAGRAPH PAGE

FOREWORD....ii

1. SCOPE 1
1.1 Purpose....1
1.2 Numbering system 1
1.2.1 Classification of tests....1
1.2.2 Test method revisions 1
1.3 Methods of reference 1

2. APPLICABLE DOCUMENTS....2
2.1 General 2
2.2 Government documents....2
2.2.1 Specifications, standards, and handbooks 2
2.3 Non-Government publications....2
2.4 Order of precedence 3

3. DEFINITIONS 4
3.1 Acronyms, symbols, and definitions 4
3.2 Acronyms used in this standard 4

4. GENERAL REQUIREMENTS....5
4.1 General 5
4.2 Test circuits....5
4.3 Destructive tests....5
4.4 Non–destructive tests....6
4.5 Laboratory suitability 6

5. DETAILED REQUIREMENTS....6

6. NOTES 6
6.1 Intended use 6
6.2 International standardization agreement 6
6.3 Subject term (key word) listing 6
6.4 Supersession data....6

Source: https://assist.dla.mil -- Downloaded: 2016-12-05T07:38Z
Check the source to verify that this is the current version before use.

CONTENTS

FIGURE	TITLE
1015–1	Resistor sampling circuits
1015–2	Current transformer circuit
1018–1	Correction factor moisture acceptance criteria expressed graphically
1019–1	Flow diagram for ionizing radiation test procedure
1020–1	ESD classification test circuit (human body model)
1020–2	ESD classification test circuit waveforms (human body model)
1021–1	Graphical representation of moisture-resistance test
1038–1	Voltage requirement
1040–1	AC blocking voltage circuit
1040–2	DC forward blocking voltage circuit
1042–1	High temperature reverse bias test circuit
1042–2	High temperature gate bias circuit
1046–1	Salt solution filter
1046–2	Location of salt solution filter
1046–3	Variations of specific gravity of salt (NaCl) solution with temperature
1051–1	Timing diagram showing one cycle
1054–1	Potted diodes
1055–1	Monitored mission cycle temperature and operating profile
1055–2	Monitored mission cycle test circuit
1071–1	Opaque construction
1071–2	Metal can construction
1071–3	Transparent glass or straight through construction
1071–4	Transparent glass double plug construction
1071–5	Smallest detectable leak
1071–6	Largest detectable leak
1080–1	Basic SEB/SEGR test circuit
1080–2	SEB circumvention and monitoring circuit
1080–3	Typical test plan flowcharts

TABLE	TITLE
I	Destructive tests
II	Non-destructive tests
1020–I	Simulator charging voltage (V_S) steps versus peak current (I_P)
1020–II	Junction polarities for ESD conditions test
1020–III	Device ESD failure threshold classification
1051–I	Temperature–cycling test conditions
1056–I	Physical property requirements of perfluorocarbon fluids
1056–II	Thermal shock temperature tolerances and suggested fluids
1057–I	Conditions and temperatures
1071–I.	Required test sequence
1071–II.	Physical property requirements of perfluorocarbon fluids
1071–III	Condition C and K pressurization conditions
1071–IV	Test limits for radioisotope fine leak method
1071–V	Fixed Conditions for test condition H_1 and CH_1
1071–VI	Purge time
1071–VII	Failure criteria for optical fine leak method L_2

Source: https://assist.dla.mil -- Downloaded: 2016-12-05T07:38Z
Check the source to verify that this is the current version before use.

CONTENTS

TEST METHOD NO.	TITLE
1001.2	Barometric pressure (reduced)
1011.1	Immersion
1015.1	Steady–state primary photocurrent irradiation procedure (electron beam)
1016	Insulation resistance
1017.1	Neutron irradiation
1018.4	Internal gas analysis (IGA)
1019.5	Steady–state total dose irradiation procedure
1020.3	Electrostatic discharge sensitivity (ESD) classification
1021.3	Moisture resistance
1022.5	Resistance to solvents
1026.5	Steady–state operation life
1027.3	Steady–state operation life (sample plan)
1031.5	High–temperature life (nonoperating)
1032.2	High–temperature (nonoperating) life (sample plan)
1033	Reverse voltage leakage stability
1036.3	Intermittent operation life
1037.3	Intermittent operation life (sample plan)
1038.5	Burn–in (for diodes, rectifiers, and zeners)
1039.4	Burn–in (for transistors)
1040	Burn–in (for thyristors (controlled rectifiers))
1041.3	Salt atmosphere (corrosion)
1042.4	Burn–in and life test for power MOSFETS or insulated gate bipolar transistors (IGBT)
1046.3	Salt spray (corrosion)
1048.1	Blocking life
1049	Blocking life (sample plan)
1051.7	Temperature cycling (air to air)
1054.1	Potted environment stress test
1055.1	Monitored mission temperature cycle
1056.8	Thermal shock (liquid to liquid)
1057.1	Resistance to glass cracking
1061.1	Temperature measurement, case and stud
1066.1	Dew point
1071.9	Hermetic seal
1080.1	Single–event burnout and single–event gate rupture
1081	Dielectric withstanding voltage

Source: https://assist.dla.mil -- Downloaded: 2016-12-05T07:38Z
Check the source to verify that this is the current version before use.

This page intentionally left blank.

Source: https://assist.dla.mil -- Downloaded: 2016-12-05T07:38Z
Check the source to verify that this is the current version before use.

1. SCOPE

1.1 Purpose. Part 1 of this test method standard establishes uniform test methods for the basic environmental testing of semiconductor devices to determine resistance to deleterious effects of natural elements and conditions surrounding military operations. For the purpose of this test method standard, the term "devices" includes such items as transistors, diodes, voltage regulators, rectifiers, tunnel diodes, and other related parts. This part of a multipart test method standard is intended to apply only to semiconductor devices.

1.2 Numbering system. The test methods are designated by numbers assigned in accordance with the following system:

1.2.1 Classification of tests. The environmental test methods included in this part of a multipart test method standard are numbered 1001 to 1081 inclusive.

1.2.2 Test method revisions. Revisions are numbered consecutively using a period to separate the test method number and the revision number. For example, 1001.2 designates the second revision of test method 1001.

1.3 Method of reference. When applicable, test methods contained herein shall be referenced in the individual specification or specification sheet by specifying the test method number and, the details required in the summary of the applicable test method shall be listed. To avoid the necessity for changing documents that refer to test methods of this standard, the revision number should not be used when referencing test methods. (For example: Use 1001 versus 1001.2.)

Source: https://assist.dla.mil -- Downloaded: 2016-12-05T07:38Z
Check the source to verify that this is the current version before use.

2. APPLICABLE DOCUMENTS

2.1 General. The documents listed in this section are specified in sections 3, 4, 5, and the individual test methods of this standard. This section does not include documents cited in other sections of this standard or recommended for additional information or as examples. While every effort has been made to ensure the completeness of this list, document users are cautioned that they must meet all specified requirements documents cited in sections 3, 4, 5, and the individual test methods of this standard, whether or not they are listed.

2.2 Government documents.

2.2.1 Specifications, standards, and handbooks. The following specifications, standards, and handbooks form a part of this document to the extent specified herein. Unless otherwise specified, the issues of these documents are those cited in the solicitation or contract.

DEPARTMENT OF DEFENSE SPECIFICATIONS

MIL–PRF–680	–	Degreasing Solvent.
MIL–PRF–19500	–	Semiconductor Devices, General Specification for.

FEDERAL SPECIFICATION

TT–I–735	–	Isopropyl Alcohol.

DEPARTMENT OF DEFENSE STANDARDS

MIL–STD–202	–	Electronic and Electrical Component Parts.
MIL–STD–750	–	Test Methods For Semiconductor Devices.
MIL–STD–750–2	–	Mechanical Test Methods For Semiconductor Devices.
MIL–STD–1686	–	Electrostatic Discharge Control Program for Protection of Electrical and Electronic Parts, Assemblies and Equipment (Excluding Electrically Initiated Explosive Devices).

DEPARTMENT OF DEFENSE HANDBOOKS

MIL–HDBK–781	–	Reliability Test Methods, Plans, and Environments for Engineering Development, Qualification, and Production.

(Copies of these documents are available online at https://assist.daps.dla.mil/quicksearch or https://assist.daps.dla.mil or from the Standardization Document Order Desk, 700 Robbins Avenue, Building 4D, Philadelphia, PA 19111-5094.)

2.3 Non-Government publications. The following documents form a part of this document to the extent specified herein. Unless otherwise specified, the issues of these documents are those cited in the solicitation or contract.

ASME INTERNATIONAL (ASME)

ASME Y14.38	–	Abbreviations and Acronyms for Use on Drawings and Related Documents.

(Copies of these documents are available online at http://www.asme.org or from ASME International, Three Park Avenue, New York, NY 10016–5990.)

Source: https://assist.dla.mil -- Downloaded: 2016-12-05T07:38Z
Check the source to verify that this is the current version before use.

ASTM INTERNATIONAL (ASTM)

ASTM D877	–	Standard Test Method for Dielectric Breakdown Voltage of Insulating Liquids Using Disk Electrodes.
ASTM D971	–	Standard Test Method for Interfacial Tension of Oil Against Water by the Ring Method.
ASTM D1120	–	Standard Test Method for Boiling Point of Engine Coolants.
ASTM D1331	–	Standard Test Methods for Surface and Interfacial Tension of Solutions of Surface-Active Agents.
ASTM D2109	–	Standard Test Methods for Nonvolatile Matter in Halogenated Organic Solvents and Their Admixtures.
ASTM E263	–	Standard Test Method for Measuring Fast-Neutron Flux by Radioactivation of Iron.
ASTM E264	–	Standard Test Method for Measuring Fast-Neutron Flux by Radioactivation of Nickel.
ASTM E265	–	Standard Test Method for Measuring Fast-Neutron Flux by Radioactivation of Sulfur.
ASTM E666	–	Standard Method for Calculation of Absorbed Dose from Gamma or X Radiation.
ASTM E668	–	Standard Practice for the Application of Thermoluminescence-Dosimetry (TLD) Systems for Determining Absorbed Dose in Radiation-Hardness Testing of Electronic Devices.
ASTM E720	–	Standard Guide for Selection of a Set of Neutron-Activation Foils for Determining Neutron Spectra used in Radiation-Hardness Testing of Electronics.
ASTM E721	–	Standard Method for Determining Neutron Energy Spectra with Neutron-Activation Foils for Radiation-Hardness Testing of Electronics.
ASTM E722	–	Standard Practice for Characterizing Neutron Energy Fluence Spectra in Terms of an Equivalent Monoenergetic Neutron Fluence for Radiation-Hardness Testing of Electronics.
ASTM E1249	–	Minimizing Dosimetry Errors in Radiation Hardness Testing of Silicon Electronic Devices.
ASTM E1250	–	Standard Method for Application of Ionization Chambers to Assess the Low Energy Gamma Component of Cobalt 60 Irradiators Used in Radiation Hardness Testing of Silicon electronic Devices.
ASTM E1275	–	Standard Practice for Use of a Radiochromic Film Dosimetry System.

(Copies of these documents are available online at http://www.astm.org or from ASTM International, 100 Barr Harbor Drive, P.O. Box C700, West Conshohocken, PA 19428–2959.)

IPC – ASSOCIATION CONNECTING ELECTRONICS INDUSTRIES (IPC)

J–STD–004	–	Requirements for Soldering Fluxes.

(Copies of these documents are available online at http://www.ipc.org or from IPC – Association Connecting Electronics Industries, 3000 Lakeside Drive, Suite 309 S, Bannockburn, IL 60015–1249.)

2.4 Order of precedence. Unless otherwise noted herein or in the contract, in the event of a conflict between the text of this document and the references cited herein (except for related applicable specification sheet, the text of this document takes precedence. Nothing in this document, however, supersedes applicable laws and regulations unless a specific exemption has been obtained.

Source: https://assist.dla.mil -- Downloaded: 2016-12-05T07:38Z
Check the source to verify that this is the current version before use.

3. DEFINITIONS

3.1 Acronyms, symbols, and definitions. For the purposes of this this part of a multipart test method standard, the acronyms, symbols, and definitions specified in MIL–PRF–19500, ASME Y14.38, and herein shall apply.

3.2 Acronyms used in this standard. Acronyms used in this test method standard are defined as follows:

a.	ATE	–	Automatic test equipment.
b	AMU	–	Atomic mass unit.
c.	CHLD	–	Cumulative Helium Leak Detector.
d.	DUT	–	Device under test.
e.	ESD	–	Electrostatic discharge.
f.	ESDS	–	Electrostatic discharge sensitivity.
g.	FET	–	Field-effect transistor.
h.	GND	–	Ground.
i.	HMS	–	Helium mass spectrometer.
j.	HCFC	–	Hydrochlorofluorocarbons.
k.	HTRB	–	High temperature reverse bias.
l.	Hz	–	Hertz.
m.	IGA	–	Internal gas analysis.
n.	IGBT	–	Insulated gate bipolar transistor.
o.	LINAC	–	Linear accelerator.
p.	mH	–	Microhenries.
q	MOS	–	Metal oxide semiconductor.
r.	MOSFET	–	Metal oxide semiconductor field-effect transistor.
s.	NIST	–	National Institute of Standards and Technology.
t.	ns	–	Nanosecond.
u.	pF	–	Picofarad.
v.	P-N		P-N junction.

Source: https://assist.dla.mil -- Downloaded: 2016-12-05T07:38Z
Check the source to verify that this is the current version before use.

w. ppmv – Parts per million volume.

x REM – Roentgen equivalent man.

y RF – Radio frequency.

z. RH – Relative humidity.

aa. SOA – Safe operating area.

bb. SSOP – Steady-state operating power.

cc. TLD – Thermoluminescence dosimetry.

dd. TDE Time dependent effects.

ee. TRIGA – Training, Research, Isotopes, General Atomics.

4. GENERAL REQUIREMENTS

4.1 General. Unless otherwise specified in the individual test method, the general requirements of MIL–STD–750 shall apply.

4.2 Test circuits. The test circuits shown in the test methods of this test method standard are given as examples which may be used for the measurements. They are not necessarily the only test circuits which can be used; however the manufacturer shall demonstrate to the Government that other test circuits which they may desire to use will give results within the desired accuracy of measurement. Circuits are shown for PNP transistors in one circuit configuration only. They may readily be adapted for NPN devices and for other circuit configurations.

4.3 Destructive tests. Unless otherwise demonstrated, the test methods listed in table I shall be classified as destructive. MIL–STD–750 covers the necessary actions needed to reclassify a test method as non-destructive.

TABLE I. Destructive tests.

Test method number	Test
1017	Neutron irradiation
1019	Steady-state total dose irradiation
1020	ESDS classification
1021	Moisture resistance
1036, 1037	Intermittent operation life
1041	Salt atmosphere
1042 (Condition D)	Burn-in/life test for power MOSFETs
1046	Salt spray
1056	Thermal shock (glass strain)

Source: https://assist.dla.mil -- Downloaded: 2016-12-05T07:38Z
Check the source to verify that this is the current version before use.

4.4 Non–destructive tests. Unless otherwise demonstrated, the test methods listed in table II shall be classified as nondestructive.

TABLE II. Non-destructive tests.

Test method number	Test
1001	Barometric pressure
1022	Resistance to solvents
1026, 1027	Steady-state life
1031, 1032	High temperature life (non-operating)
1038, 1039, 1040	Burn-in screen
1042 (Condition A, B, and C)	Burn-in/life test for power MOSFETs
1051 (100 cycles or less)	Thermal shock (temperature cycling)
1071	Hermetic seal tests

4.5 Laboratory suitability. Prior to processing any semiconductor devices intended for use in any military system or sub-system, the facility performing the test(s) shall be audited by the DLA Land and Maritime, Sourcing and Qualification Division and be granted written laboratory suitability status for each test method to be employed. Processing of any devices by any facility without laboratory suitability status for the test methods used shall render the processed devices nonconforming.

5. DETAILED REQUIREMENTS

This section is not applicable to this standard.

6. NOTES

(This section contains information of a general or explanatory nature that may be helpful, but is not mandatory.)

6.1 Intended use. The intended use of this test method standard is to establish appropriate conditions for testing semiconductor devices to give test results that simulate the actual service conditions existing in the field. This test method standard has been prepared to provide uniform test methods, controls, and procedures for determining with predictability the suitability of such devices within military, aerospace and special application equipment.

6.2 International standardization agreement. Certain provisions of this test method standard are the subject of international standardization agreement. When amendment, revision, or cancellation of this test method standard is proposed which will affect or violate the international agreement concerned, the preparing activity will take appropriate reconciliation action through international standardization channels, including departmental standardization offices, if required.

6.3 Subject term (key word) listing.

Destructive tests
Environmental tests
Laboratory suitability
Non–destructive tests

6.4 Supersession data. The main body and five parts (–1 through –5) of this revision of MIL–STD–750 replace superseded MIL–STD–750E.

Source: https://assist.dla.mil -- Downloaded: 2016-12-05T07:38Z
Check the source to verify that this is the current version before use.

METHOD 1001.2

BAROMETRIC PRESSURE (REDUCED)

1. Purpose. The purpose of this test method is to check the semiconductor device capabilities under conditions simulating the low pressure encountered in the nonpressurized portions of aircraft in high altitude flight.

2. Apparatus. The apparatus used for the barometric-pressure test shall consist of a vacuum pump and a suitable sealed chamber having means for visual observation of the device under test when necessary. A suitable pressure indicator shall be used to measure the simulated altitude in feet in the sealed chamber.

3. Procedure. The devices shall be mounted in the test chamber as specified and the pressure reduced to the value indicated in one of the following test conditions, as specified. Previous references to this test method do not specify a test condition; in such cases, test condition B shall be used. While the devices are maintained at the specified pressure, and after sufficient time has been allowed for all entrapped air in the chamber to escape, the devices shall be subjected to the specified test.

Test condition	Pressure – maximum		Altitude	
	Inches of mercury	Millimeters of mercury	Feet	Meters
A	8.88	226.00	30,000	9,144
B	3.44	87.00	50,000	15,240
C	1.31	33.00	70,000	21,336
D	0.315	8.00	100,000	30,480
E	0.043	1.09	150,000	45,720
F	17.300	439.00	15,000	4,572
G	9.436×10^{-8}	2.40×10^{-6}	656,000	200,000

In addition the following is required:

a. Twenty minutes before and during the test, the test temperature shall be +25°C ±3°C.

b. The specified voltage shall be applied and monitored over the range from atmospheric pressure to the specified minimum pressure and returned so that any device malfunctions, if they exist, will be detected.

4. Failure criteria. A device which exhibits arc-overs, harmful coronas, or any other defect or deterioration that may interfere with the operation of the device shall be considered a failure.

5. Summary. The following conditions must be specified in the applicable performance specification sheet or acquisition document:

a. Maximum pressure (see 3).

b. Voltage (see 3.b).

Source: https://assist.dla.mil -- Downloaded: 2016-12-05T07:38Z
Check the source to verify that this is the current version before use.

This page is intentionally left blank.

Source: https://assist.dla.mil -- Downloaded: 2016-12-05T07:38Z
Check the source to verify that this is the current version before use.

METHOD 1011.1

IMMERSION

1. Purpose. This test method is performed to determine the effectiveness of the seal of semiconductor devices. The immersion of the device under evaluation into liquid at widely different temperatures subjects it to thermal and mechanical stresses which will readily detect a defective terminal assembly, or a partially closed seam or molded enclosure. Defects of these types can result from faulty construction or from mechanical damage such as might be produced during physical or environmental tests. The immersion test is generally performed immediately following such tests because it will tend to aggravate any incipient defects in seals, seams, and bushings which might otherwise escape notice. This test is essentially a laboratory test condition, and the procedure is intended only as a measurement of the effectiveness of the seal following this test. The choice of fresh or salt water as a test liquid is dependent on the nature of the device under test. When electrical measurements are made after immersion cycling to obtain evidence of leakage through seals, the use of a salt solution instead of fresh water will facilitate detection of moisture penetration. This test provides a simple and ready means of detection of the migration of liquids. Effects noted can include lowered insulation resistance, corrosion of internal parts, and appearance of salt crystals. The test described is not intended as a thermal-shock or corrosion test, although it may incidentally reveal inadequacies in these respects.

2. Procedure. The test consists of successive cycles of immersions, each cycle consisting of immersion in a hot bath of fresh (tap) water at a temperature of 65°C +5°C, –0°C followed by immersion in a cold bath. The number of cycles, duration of each immersion, and the nature and temperature of the cold bath shall be as indicated in the applicable test condition listed in the specified test.

Test condition	Number of cycles	Duration of each immersion (minutes)	Immersion bath (cold)	Temperature of cold bath (°C)
A	2	15	Fresh (tap) water	25, +10, –5
B	2	15	Saturated solution of sodium chloride and water.	25, +10, –5
C	5	60	Saturated solution of sodium chloride and water.	0 ±3

The transfer of specimens from one bath to another shall be accomplished as rapidly as practicable. After completion of the final cycle, specimens shall be thoroughly and quickly washed and all surfaces wiped or air-blasted clean and dry.

3. Measurements. Unless otherwise specified, measurements shall be made at least 4 hours, but not more than 24 hours, after completion of the final cycle. Measurements shall be made as specified.

4. Summary. The following details are to be specified in the applicable performance specification sheet or acquisition document:

a. Test condition letter (see 2).

b. Time after final cycle allowed for measurements, if other than that specified (see 3).

c. Measurements after final cycle (see 3).

Source: https://assist.dla.mil -- Downloaded: 2016-12-05T07:38Z
Check the source to verify that this is the current version before use.

This page is intentionally left blank.

Source: https://assist.dla.mil -- Downloaded: 2016-12-05T07:38Z
Check the source to verify that this is the current version before use.

METHOD 1015.1

STEADY–STATE PRIMARY PHOTOCURRENT IRRADIATION PROCEDURE (ELECTRON BEAM)

1. Purpose. This test method establishes the means for measuring the steady-state primary photocurrent (I_{PH}) generated in semiconductor devices when these devices are exposed to ionizing radiation. In this test method, the test device is irradiated in the primary electron beam of a linear accelerator (LINAC).

1.1 Definitions. The following definitions shall apply for this test method.

1.1.1 Primary photocurrent (I_{PH}). The flow of excess charge carriers across a P-N junction due to ionizing radiation creating electron-hole pairs in the vicinity of the P-N junction.

1.1.2 Measurement interferences. A current measured in the test circuits that does not result from primary photocurrent (see appendix herein).

2. Apparatus.

2.1 Ionizing pulse source. The ionizing pulse shall be produced by an electron LINAC. The ionizing pulse shall have dose rate variations within ±15 percent of nominal during the pulse and shall consist of electrons with an energy equal to or greater than 10 MeV.

2.2 Pulse recording equipment. Pulse recording equipment shall be provided that will display and record both the photocurrent and the pulse-shape monitor signal. It may consist of oscilloscopes with recording cameras, appropriate digitizing equipment, or other approved recording equipment. The equipment shall have an accuracy and resolution of five percent of the pulse width and maximum amplitude of the ionizing source.

2.3 Test circuits. One of the following test circuits shall be selected, radiation-shielded, and close enough to the DUT in order to meet the requirements of 3.2.

2.3.1 Resistor sampling circuits. The resistor sampling circuits shall be as shown on figure 1015–1.

2.3.2 Current transformer circuit. The current transformer circuit shall be as shown on figure 1015–2.

2.4 Irradiation pulse-shape monitor. One of the following devices shall be used to develop a signal proportional to the dose rate delivered to the DUT. Any time constants which degrade the linear response of the monitor signal shall be less than 10 percent of the beam pulse width. The dose rate at the monitor shall be proportional to the dose rate at the DUT and the variation from proportionality shall not exceed ±3 percent.

2.4.1 Signal diode. The signal diode selected shall have a response that is linear within ±5 percent of the dose rate over the selected irradiation range. Depending on the sensitivity of the diode, it may be positioned at a point within the beam from the ionizing source at which it will remain in the linear region. The signal diode shall be placed in one of the test circuits described in 2.3, and it shall be back biased at not more than fifty percent of the diode breakdown voltage.

2.4.2 P-type-intrinsic-N-type (P-I-N) diode. A P-I-N diode shall be used as stated in 2.4.1.

2.4.3 Current transformer. A transformer with a hollow central axis that shall be mounted around the output of the ionizing source.

2.4.4 Secondary-emission monitor. The secondary-emission monitor shall consist of a thin foil mounted in a chamber evacuated to less than or equal to 0.134 Pa (0.001 mmHg), which is located in the path of the beam from the ionizing source. The foil shall be biased negatively with respect to ground, or shielded with positively biased grids.

2.5 Dosimeter. The dosimeter shall be used to calibrate the output of the pulse-shape monitor in terms of dose rate. The dosimeter type shall be a commercial thermoluminescent detector (TLD), thin calorimeter, or other system as specified. The dosimetry measurement technique shall be accurate to ±20 percent.

Source: https://assist.dla.mil -- Downloaded: 2016-12-05T07:38Z
Check the source to verify that this is the current version before use.

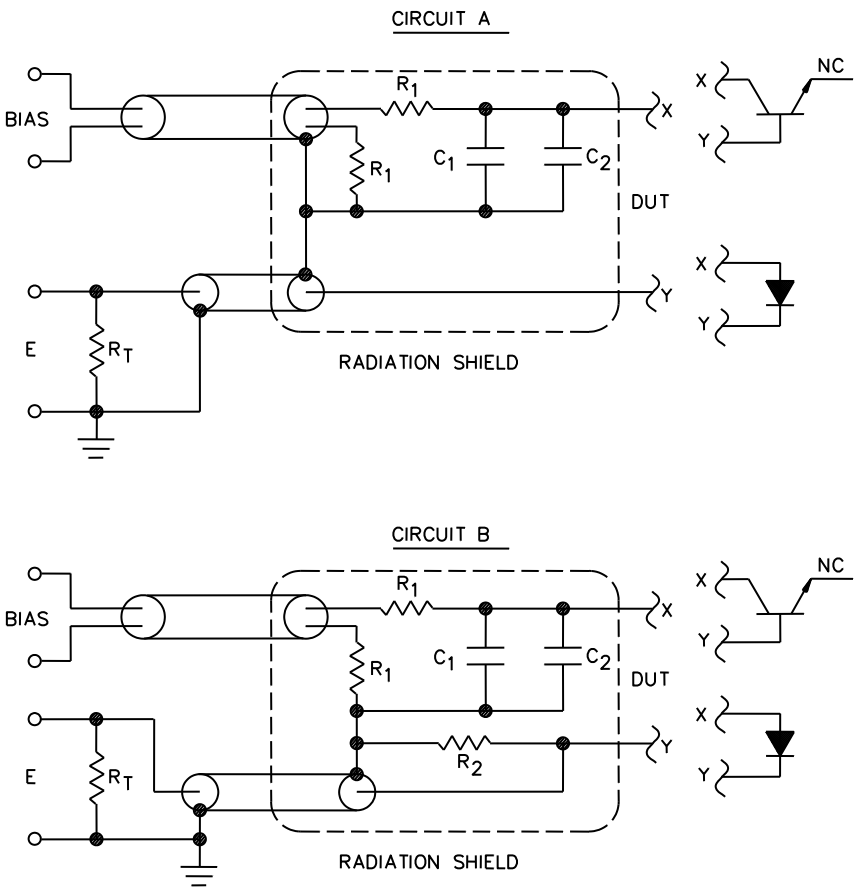

NOTES:

1. R_1 = 1,000 Ω, 5 percent.
2. R_2 = 5 Ω, 1 percent.
3. C_1 = 15 μF, 5 percent.
4. C_2 = .01 μF, 5 percent.
5. R_T = Characteristic termination for coaxial cable.
6. Circuit B shall be used for large photocurrents (those for which more than 10 percent of the bias appears across resistor R_T in circuit A).
7. Photocurrent for circuit A:

$$I_{PH} = \frac{\text{Steady-state signal } (E)}{\text{Cable termination } (R_T)}$$

8. Photocurrent for circuit B:

$$I_{PH} = \frac{[\text{Steady-state signal } (E)][\text{Cable termination } (R_T) + R_2]}{[\text{Cable termination}(R_T)][R_2]}$$

FIGURE 1015–1. Resistor sampling circuits.

Source: https://assist.dla.mil -- Downloaded: 2016-12-05T07:38Z
Check the source to verify that this is the current version before use.

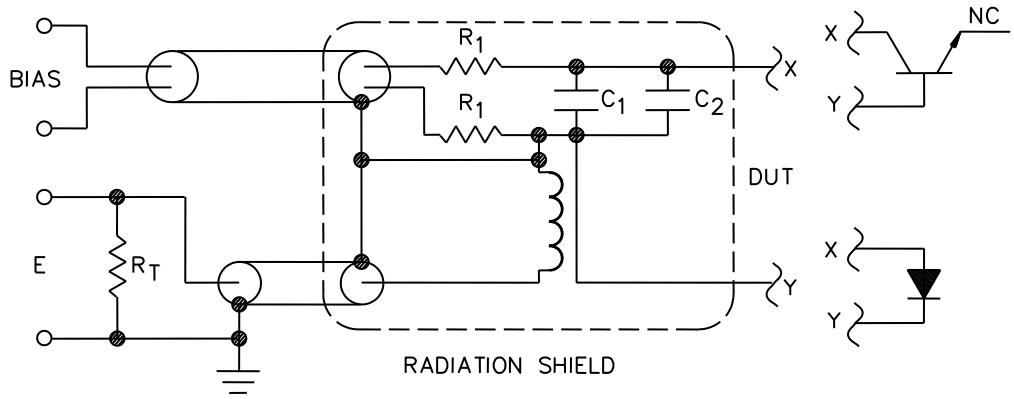

NOTES:

1. R_1 = 1,000 Ω, 5 percent.
2. C_1 = 15 μF, 5 percent.
3. C_2 = .01 μF, 5 percent.
4. R_T = Characteristic termination for coaxial cable.
5. Photocurrent calculation:

$$I_{PH} = \frac{\textit{Steady-state signal (E)}}{\textit{Sensitivity of current transformer}}$$

FIGURE 1015–2. Current transformer circuit.

3. Procedure.

3.1 General. The test facility shall select a test fixture and pulse shape monitor. The test fixture and monitor shall be aligned with the beam from the ionizing source. In addition, any shielding, collimation, or beam scattering equipment shall be properly positioned. If repositioning of any equipment or the test circuit is required to accomplish the device testing, the repositioning shall be demonstrated to be reliable and repeatable.

Source: https://assist.dla.mil -- Downloaded: 2016-12-05T07:38Z
Check the source to verify that this is the current version before use.

3.2 Test circuit check-out. The ionizing source shall be pulsed either with an empty device package or without the DUT in the test circuit and with all required bias applied. The ionizing source shall be adjusted to supply the dose rate required for this test. The recorded current from the pulse recording equipment shall be no more than 10 percent of the steady-state photocurrent expected to be measured for this test (see 3.4.3). If this condition is not met, see appendix herein.

3.3 Ionizing source calibration. Mount the selected dosimeter in place of the DUT. Pulse the ionizing source, record the pulse-shape monitor signal, and determine the radiation dose measured by the dosimeter. Calculate a dose rate factor as follows:

$$Doseratefactor = \frac{Measureddosimeterdose[rad(Si)]}{Integratedpulseshapemonitorsignal(voltsxseconds)}$$

This measurement shall be repeated five times, and the average of the six dose rate factors obtained shall be the dose rate factor used for the test. One dosimeter may be used repetitively if the dose is read for each pulse.

3.4 Device test.

3.4.1 Mounting. Mount the DUT in the beam from the ionizing source and connect it to the rest of the test circuit. The bias applied shall be as specified in the device performance specification sheet; or if not specified, the bias shall be fifty percent of the specified breakdown voltage of the DUT.

3.4.2 Dose rate. Either adjust the ionizing source beam current or use an alternate method (i.e., scatterers or a different sample location) to obtain the specified dose rate ±20 percent. Pulse the ionizing source and record the pulse-shape monitor signal and the photocurrent signal from the DUT.

3.4.3 Calculate photocurrent. The steady-state photocurrent shall be calculated as expressed on the figure selected for the test circuit in 2.3.

3.4.4 Verify test circuit. Check the current recorded in the test circuit in 3.2 and verify that the value of the current does not exceed 10 percent of the photocurrent recorded in 3.4.3.

3.5 Test circuit checkout. Repeat the device test (see 3.4) for each dose rate that is required by the device performance specification sheet. The calibration (see 3.3) shall be performed for each dose rate to be tested. The test circuit checkout (see 3.2) shall be performed when a new device type is tested or when any change is made in the position of the test circuit or DUT supporting structure.

4. Summary. The following conditions shall be specified in the applicable performance specification sheet or acquisition document:

a. The pulse width requirements of the ionizing pulse source. (The pulse width must exceed the semiconductor minority lifetime by at least a factor of two.)

b. The bias applied to the device (see 3.4.1).

c. The irradiation dose rate(s) applied (see 3.4.2).

d. When required, any total dose restrictions.

e. When required, a description of the placement of the device in the beam with respect to the junction.

f. When required, for multi-junction devices, the device terminals that are to be monitored.

g. When required, the procedure for approval of the test facility and dosimetry.

Source: https://assist.dla.mil -- Downloaded: 2016-12-05T07:38Z
Check the source to verify that this is the current version before use.

APPENDIX A

MEASUREMENT INTERFERENCES

A.1. Scope. The following problems commonly arise when electronics are tested in a radiation environment. Most of these interferences are present when the test circuit is irradiated under bias with the DUT removed. This appendix is not a mandatory part of the test method. The information contained herein is intended for guidance only.

A.1.1 Air ionization. The irradiation pulse can ionize the air around the test circuit and provide a spurious conduction path. The air ionization contribution to the signal is proportional to the applied bias. The effect of air ionization is minimized by reducing the circuit components exposed to the beam pulse, by coating exposed leads with a thick nonconducting layer or by performing the test in a vacuum.

A.1.2. Secondary emission. The beam pulse irradiating any electrical lead or component can cause a net charge to enter or leave the exposed surfaces. This spurious current alters the measured photocurrent. Secondary emission effects are reduced by minimizing the circuit components exposed to the direct beam.

A.1.3. Perturbed irradiation field. Any material exposed to the beam pulse will scatter and modify the incident radiation of the beam. A nearby DUT or dosimeter will then be exposed to a noncharacterized and unexpected form of radiation. These field perturbations are reduced by minimizing the mass of the structure supporting the DUT and the dosimeter that is exposed to the beam. All materials should have a low atomic number; e.g., plastics and aluminum.

A.1.4. RF pickup. The ionizing pulse source discharges large amounts of electromagnetic energy at the same time the photocurrent is being measured. Good electrical practice is necessary to eliminate resonant structure, noise pick-up on signal cables, common mode pick-up, ground loops, and similar interferences.

Source: https://assist.dla.mil -- Downloaded: 2016-12-05T07:38Z
Check the source to verify that this is the current version before use.

This page is intentionally left blank.

Source: https://assist.dla.mil -- Downloaded: 2016-12-05T07:38Z
Check the source to verify that this is the current version before use.

METHOD 1016

INSULATION RESISTANCE

1. The semiconductor device shall be tested in accordance with test method 302 of MIL–STD–202.

Source: https://assist.dla.mil -- Downloaded: 2016-12-05T07:38Z
Check the source to verify that this is the current version before use.

This page is intentionally left blank.

Source: https://assist.dla.mil -- Downloaded: 2016-12-05T07:38Z
Check the source to verify that this is the current version before use.

METHOD 1017.1

NEUTRON IRRADIATION

1. Purpose. The neutron irradiation test is performed to determine the susceptibility of discrete semiconductor devices to degradation in the neutron environment. This test is destructive. Objectives of the test are:

a. To detect and measure the degradation of critical semiconductor device electrical characteristics as a function of neutron fluence.

b. To determine if specified semiconductor device electrical characteristics are within specified limits after exposure to a specified level of neutron fluence (see 2.4.1).

2. Apparatus.

2.1 Test instruments. Test instrumentation to be used in the radiation test shall be standard laboratory electronic test instruments such as power supplies, digital voltmeters, and picoammeters, capable of measuring the electrical parameters required. Parameter test methods and calibration shall be in accordance with this test method standard.

2.2 Radiation source. The radiation source used in the test shall be in a TRIGA Reactor or a Fast Burst Reactor. Operation may be in either pulse or steady-state repetitive pulse conditions as appropriate. The source shall be one that is acceptable to the acquiring activity.

2.3 Dosimetry equipment.

a. Fast-neutron threshold activation foils such as ^{32}S, ^{54}Fe, and ^{58}Ni.

b. CaF_2 thermoluminescence-dosimetry (TLD).

c. Appropriate activation foil counting and TLD readout equipment.

2.4 Dosimetry measurements.

2.4.1 Neutron fluence. The neutron fluence used for device irradiation shall be obtained by measuring the amount of radioactivity induced in a fast-neutron threshold activation foil such as ^{32}S, ^{54}Fe, or ^{58}Ni, irradiated simultaneously with the device. A standard method for converting the measured radioactivity in the specific activation foil employed into a neutron fluence is given in ASTM E263, ASTM E264, and ASTM E265.

The conversion of the foil radioactivity into a neutron fluence requires a knowledge of the neutron spectrum incident on the foil. If the spectrum is not known, it shall be determined by use of ASTM E720, ASTM E721, ASTM E722, or their equivalent.

Once the neutron energy spectrum has been determined and the equivalent monoenergetic fluence calculated, then an appropriate monitor foil (such as ^{32}S, ^{54}Fe, or ^{58}Ni) should be used in subsequent irradiations to determine the neutron fluence as discussed in ASTM E722. Thus, the neutron fluence is described in terms of the equivalent monoenergetic neutron fluence in accordance with the unit monitor response. Use of a monitor foil to predict the equivalent monoenergetic neutron fluence is valid only if the energy spectrum remains constant.

2.4.2 TLD measurements. If absorbed dose measurements of the gamma-ray component during the device test irradiations are required, then such measurements shall be made with CaF_2 TLDs, or their equivalent. These TLDs shall be used in accordance with the recommendations of ASTM E668.

Source: https://assist.dla.mil -- Downloaded: 2016-12-05T07:38Z
Check the source to verify that this is the current version before use.

3. Procedure.

3.1 Safety requirements. Neutron irradiated devices may be radioactive. Handling and storage of test specimens or equipment subjected to radiation environments shall be governed by the procedures established by the local Radiation Safety Officer or health physicist.

NOTE: The receipt, acquisition, possession, use, and transfer of this material after irradiation is subject to the regulations of the U.S. Nuclear Regulatory Commission, Radioisotope License Branch, Washington, DC 20555. A by-product license is required before an irradiation facility will expose any test devices. (U.S. Code, see 10 CFR 30-33.)

3.2 Test samples. Unless otherwise specified, a test sample shall be randomly selected and consist of a minimum of ten devices. All test samples shall have met all the requirements of the governing specification for that device. Each device shall be serialized to enable pre and post test identification and comparison.

3.3 Pre-exposure.

3.3.1 Electrical tests. Pre-exposure electrical tests shall be performed on each device as required. Where delta parameter limits are specified, the pre-exposure data shall be recorded.

3.3.2 Exposure set-up. Each device shall be mounted unbiased and have its terminal leads either all shorted or all open. For Metal oxide semiconductor (MOS) devices all leads shall be shorted. An appropriate mounting fixture which will accommodate both the sample and the required dosimeters (at least one actuation foil and one CaF_2 TLD) shall be used. The configuration of the mounting fixture will depend on the type of reactor facility used and should be discussed with reactor facility personnel. Test devices shall be mounted such that the total variation of fluence over the entire sample does not exceed 20 percent. Reactor facility personnel shall determine both the position of the fixture and the appropriate pulse level or power time product required to achieve the specified neutron fluence level.

3.4 Exposure. The test devices and dosimeters shall be exposed to the neutron fluence as specified. The exposure level may be obtained by operating the reactor in either the pulsed or power mode. If multiple exposures are required, the post-irradiation electrical tests shall be performed (see 3.5.1) after each exposure. A new set of dosimeters are required for each exposure level. Since the effects of neutrons are cumulative, each additional exposure level will have to be determined to give the specified total accumulated fluence. All exposures shall be made at 20°C ±10°C and shall be correlated to a 1 MeV equivalent fluence.

3.5 Post-exposure.

3.5.1 Electrical tests. Test devices shall be removed only after clearance has been obtained from the health physicist at the test facility. The temperature of the sample devices shall be maintained at +20°C ±10°C from the time of the exposure until the post-electrical tests are made. The post-exposure electrical tests shall be made within 24 hours after the completion of the exposure. If the residual radioactivity level determined by the local Radiation Safety Officer is too high for device handling purposes, the elapsed time before post-test electrical measurements are made shall be extended to 1 week or remote testing shall be utilized. All required data must be recorded for each device after each exposure.

3.5.2 Failure analysis. Devices which exhibit anomalous behavior (e.g., non-linear degradation of 1/ß) shall be subjected to failure analysis.

Source: https://assist.dla.mil -- Downloaded: 2016-12-05T07:38Z
Check the source to verify that this is the current version before use.

3.6 Reporting. In reporting the results of radiation tests on discrete devices, adequate identification of the devices is essential. As a minimum, the report shall include the device type number, serial number, the manufacturer, controlling specification, the date code, and other Part or Identifying Numbers (PINs) provided by the manufacturer. Each data sheet shall include radiation test date, electrical test conditions, radiation test levels, and ambient conditions, as well as the test data. When other than specified electrical test circuits are employed, the parameter measurement circuits shall accompany the data. Any anomalous incidents during the test shall be fully explained in footnotes to the data.

4. Summary. The following conditions shall be specified in the request for test, or when applicable, in the performance specification sheet or acquisition document:

a. Device types.

b. Quantities of each device type to be tested if other than specified in 3.2.

c. Electrical parameters to be measured in pre- and post-exposure tests.

d. Criteria for pass, fail, record actions on tested devices.

e. Criteria for anomalous behavior designation.

f. Radiation exposure levels.

g. Test instrument requirements.

h. Radiation dosimetry requirements if other than 2.3.

i. Ambient temperature, if other than specified herein.

j. Requirements for data reporting and submission, where applicable.

Source: https://assist.dla.mil -- Downloaded: 2016-12-05T07:38Z
Check the source to verify that this is the current version before use.

This page is intentionally left blank.

Source: https://assist.dla.mil -- Downloaded: 2016-12-05T07:38Z
Check the source to verify that this is the current version before use.

METHOD 1018.4

INTERNAL GAS ANALYSIS (IGA)

1. Purpose. The purpose of this test method is to quantitatively measure the gas atmosphere inside a metal or ceramic hermetically-sealed semiconductor device using mass spectrometry methods. Gases inside hermetically sealed devices can impact device long term reliability. Of particular interest is the measurement of the primary sealing gases (or lack thereof), the moisture content, the presence of bombing gases that are indicative of non-hermeticity (e.g. helium, O_2 to Ar ratio indicative of room air ~ 20 to 1 (+/- 10 percent), dissimilar concentration of internally sealed gases (e.g. nitrogen, helium) than originally sealed in the device package, the presence of leak test fluid (i.e. fluorocarbon, helium, air), and all other gases to determine if the device meets the specified moisture, hermeticity and other criteria. Also of interest is the measurement of all the other gases since they reflect upon the quality of the sealing process and provide information about the long term chemical stability of the atmosphere inside the device. This test is destructive. The presence of leak test fluorocarbon vapor in the IGA is an indication of failure to meet leak test requirements of test method 1071 of this test method standard.

1.1 Definitions. The definitions for all terms used herein shall be as specified in MIL–PRF–19500 and those contained herein.

a. Accuracy: A combination of the bias and precision of an analytical procedure, which reflects the closeness of a measured value to the true value. For the purposes of laboratory suitability, accuracy means the closeness of a measured value to its reference standard.

b. Matrix: The general gaseous makeup of the primary gases of a particular sample.

c. Air burst: A sample of room air used to determine the sensitivity (calibration factor) for Oxygen, Nitrogen & Argon using room air as a calibration source. An air burst reading shall be taken weekly (every week testing is performed). The results of all air burst measurements shall be recorded, retained & made available to the qualifying activity upon request.

d. Mass-to-charge ratio: The atomic mass of a charged molecule (or a molecule fragment) divided by the charge (in electron volts.)

e. Atomic mass unit (AMU): Has the same meaning as "mass-to-change-ratio". The term "mass" is sometimes used to represent AMU or mass-to-charge ratio. (Example: Mass range has the same meaning as "AMU range", which has the same meaning as "mass-to-charge-ratio range".)

f. Mass peak (or Peak): The rise and fall of the ion signal intensity over a finite mass range. The peak must be processed to determine the amplitude of the peak and the AMU value of the peak centroid in order to perform qualitative or quantitative analysis.

g. Mass spectrometer: A laboratory instrument that is capable of measuring the constituents of gas mixtures through a process of ionizing the gas sample and then performing a spectrographic analysis that detects the ion count versus the mass-to-charge ratio of ionized gases. The mass spectrometer is technically an individual component of the mass spectrometer system which includes all of the supplemental components and capabilities defined in apparatus.

h. Mass spectrometer types: There are several types of mass spectrometers such as Quardupole, Magnetic Sector and Time-Of-Flight. These names only describe the method that is used to perform mass-to-charge separation. These names do not describe the method of ionizing the sample, nor do they describe the method of detecting the ion signal.

Source: https://assist.dla.mil -- Downloaded: 2016-12-05T07:38Z
Check the source to verify that this is the current version before use.

i. Mass range: The minimum and maximum AMU range over which the mass spectrometer is capable of detecting ions and resolving peaks. Mass spectrometers types may have widely different detection sensitivity and resolution over the mass range.

j. Mass resolution: Mass resolution refers to the ability to separate a mass peak from an adjacent mass peak.

k. Unit mass resolution: Refers to mass spectrometers that can only resolve one whole mass from an adjacent whole mass.

l. High mass resolution: Refers to mass spectrometers that can resolve peaks that are separated by tenths and even hundredths of 1 AMU.

m. Scanning: Refers to acquisition of a mass spectra over an AMU range.

n. Scanning speed: Refers to the time/AMU (sec/AMU or ms/AMU) that the spectrometer scans the spectra. Scan speed is often programmable but is often limited by electronic signal processing limitations and data storage rate limits. Excessive speed may result is artificial distortion of small peaks that reside next to large peaks.

o. Scanning mode: Refers to different ways to acquire mass spectra data:

p. Continuous scanning: Continuous scanning refers to acquiring spectra data in fractions of an AMU so as to be able to display a peak shape. This procedure stores substantial amounts of data and may be limited in speed due to the requirement to save much more data. It also requires a method to mathematically process the peak shape data to establish the peak height or peak area and determine the fractional AMU value of the peak centroid.

q. Step scanning: Step scanning refers to acquiring the ion signal value only at pre-defined AMU centroid locations. The method requires precise and stable calibration of the AMU scale and assumes that the defined AMU location is stable so as not to unintentionally measure at a shoulder of the peak rather than the maximum of a peak. It also requires some assumptions when distinguishing trace level signals from background signal.

r. Ionization source: The hardware and the process to ionize the gases and focusing the ions into the mass spectrometer. Maintaining the ionization source in a clean condition is critical to good quantitative results.

s. Mass spectrometer tuning: The procedure for adjusting the operating voltages and sample injection gas pressure conditions within the ionization source and detector of the mass spectrometer so as to optimize the overall peak shape response of the mass spectrometer per the selected scanning conditions and data acquisition parameters so as to produce consistent undistorted spectra. Calibration of the mass spectrometer is only valid for the tuning conditions for which the system was calibrated. Deterioration of the tuning performance invalidates the calibration.

t. Qualitative analysis: The ability to identify what gases are present and to some degree, an approximate amount.

u. Device volume: All references to the device internal volume specified in this document shall be interpreted to mean the adjusted volume of the device.

v. Physical internal volume: The internal free space in the device (the internal volume of the package less the volume of the die and die attach material).

w. Adjusted volume: The volume equivalent to a device having one atmosphere of gas. (Physical internal volume times the number of atmospheres in the device divided by one atmosphere.

Source: https://assist.dla.mil -- Downloaded: 2016-12-05T07:38Z
Check the source to verify that this is the current version before use.

x. Volume range suitability: The adjusted volume ranges that the qualifying activity has approved for a laboratory to test.

y. Signal to noise ratio (S/N): A dimensionless measure of the relative strength of an analytical signal (S) to the average strength of the background instrumental noise (N) and is closely related to the detection level. The ratio is useful for determining the effect of the noise on the relative error of a measurement. For this calculation, the signal and noise used shall be for the same AMU. For the purposes of this test method, signal to noise ratio shall be calculated as (the difference between the signal amplitude less the average of the background signal) divided by (4 times the standard deviation of the background signal). This assumes a moisture sample in nitrogen.

z. Quantitative analysis: The ability to identify the gas species that are present and the ability determine the concentration of the species to some level of assurance. Mass spectrometer test results may be quantitative only when:

(1) The mass spectrometer has been precisely tuned to reproducibly create and detect ions at the level of specified sensitivity for the analysis within the mass range and mass resolution of interest for the analysis,

(2) The AMU scale has been calibrated at the mass resolution, scanning mode and scanning speed used for the analysis,

(3) The ion count detection response factors to the different gases has been calibrated,

(4) A methodology has been created to efficiently inject calibration and test sample gases into the ionization region of the mass spectrometer without undo loss or alteration of the sample gas,

(5) A methodology of collecting, storing, and retrieving data from the mass spectrometer has been developed,

(7) A method of quantization has been developed that accounts for interference from gases with overlapping spectra.

2. Apparatus. The mass spectrometer used to perform the internal gas analysis test shall meet the following requirements:

a. Mass range. The mass spectrometer shall be capable of a minimum mass range of 1 to 140 AMU.

b. Detection limit:

(1) The mass spectrometer shall be capable of reproducibly detecting the specified moisture content for a given volume package with signal to noise ratio of 20 to 1 or greater. (i.e., for a specified limit of 5,000 parts per million volume (ppmv)).

(2) For all gases that are specified in the failure criteria, other than moisture, the mass spectrometer system shall be capable of detecting that gas at the specified limit with a signal-to-noise ratio greater than 20 to 1.

(3) The mass spectrometer shall also be capable of detecting a 250 ppmv minimum detection limit to moisture.

(4) The mass spectrometer shall be capable of a 50 ppmv minimum detection limit to nitrogen, oxygen, argon, carbon dioxide, hydrogen, helium and fluorocarbons. Fluorocarbons shall be identified by the presences of masses 69 and 119.

Source: https://assist.dla.mil -- Downloaded: 2016-12-05T07:38Z
Check the source to verify that this is the current version before use.

c. A vacuum opening chamber which can contain the device and a vacuum transfer passage connecting the device to the mass spectrometer. A vacuum transfer passage shall efficiently (without significant loss of moisture from adsorption) transfer the gas from the device to the mass spectrometer ion source for measurement.

d. For initial certification of systems or extension of suitability, device temperature on systems using an external fixture shall be characterized by placing a thermocouple into the cavity of a blank device of similar mass, internal volume, construction, and size. This shall be a means for proving the device temperature that has been maintained at 100°C ±5°C for the minimum 10 minutes. This also applies to devices prebaked in an external oven but tested with the external fixture to adjust for any temperature drop during the transfer. These records shall be maintained by the test laboratory.

e. A piercing arrangement functioning within the opening chamber or transfer passage of 2.b.5, which can pierce the specimen housing (without breaking the mass spectrometer chamber vacuum and without disturbing the package sealing medium), thus allowing the specimen's internal gases to escape into the chamber and mass spectrometer.

NOTE: A sharp-pointed piercing tool, actuated from outside the chamber wall via a bellows to permit movement shall be used to pierce both metal and ceramic packages. For ceramic packages, or devices with thick metal lids, the package lid or cover should be locally thinned by abrasion to facilitate localized piercing.

f. A pressure sensing device to measure the pressure rise in the transfer passage during the test. This pressure sensor is used to read a relative pressure change when the device is punctured. This relative pressure change indicates the relative quantity of gas in the device when comparing the test results of one device to another device. The pressure reading is not intended to be absolute. Although the pressure gauge reading is reported, the pressure gauge is for indication only.

g. The IGA laboratory shall provide package simulators that have the capability of introducing calibration gas mixtures into the mass spectrometer in a manner that reproduces the injection pressure dynamics, timing and location as that used to test devices. Other injection locations are allowable, if it can be demonstrated that they are equivalent to the actual device test location. The simulators shall be capable of generating a known volume of gas (±10 percent) on a repetitive basis by means of a continuous gas flow from a calibrated gas source. A simulator shall be provided having an internal volume of the lowest volume for which the lab is requesting laboratory suitability. Additional simulators shall be provided to calibrate each decade of larger volume for which the lab is requesting laboratory suitability.

h. The calibration of moisture content shall be established by the standard generation techniques (i.e., 2 pressure, divided flow, or cryogenic method). The dew point hygrometer shall be recalibrated a minimum of once per year using equipment traceable to NIST or by a suitable commercial calibration services laboratory using equipment traceable to NIST standards. The dew point hygrometer shall be capable of measuring the dew point temperature to an accuracy of ±0.2°C. The system shall have a calibrated pressure sensor to measure the pressure in line with the temperature dew point sensor to an accuracy of ±0.1 inches of Hg (2.54 mm of Hg) for the range of pressure being used. In addition, the test laboratory shall have a procedure to calculate the concentration of moisture, in units of ppmv, from the dew point temperature measurement and the pressure measurement.

Source: https://assist.dla.mil -- Downloaded: 2016-12-05T07:38Z
Check the source to verify that this is the current version before use.

2.1 System calibration requirements. The system calibration requirements for the internal gas analysis test shall be as specified herein.

2.1.1 System suitability qualification test for measuring moisture. For each package simulator, the laboratory shall annually perform a system qualification test for moisture by performing the following sequence using moisture in a nitrogen matrix:

a. Perform three injections using a know moisture value that is in the range of 5,000 ±500 ppmv.

b. Calculate the best fit calibration factor for moisture and recalculate the results of the three injections.

c. Perform the following sequence of injections to create a moisture calibration curve:

(1) 2 consecutive injections at a moisture concentration >7,000 ppmv, then

(2) 2 consecutive injections at a moisture concentration <2,500 ppmv, then

(3) 2 consecutive injections at a moisture concentration >7,000 ppmv, then

(4) 2 consecutive injections at a moisture concentration <2,500 ppmv, then

(5) 2 consecutive injections at a moisture concentration in the range of 5,000 ±500 ppmv.

d. Record the actual moisture standard readings and the test result for each test. Using the original 3 moisture tests at 5,000 ppmv and the test results from the sequence above,

(1) Calculate the intercept, slope and R^2 factors using the linear regression formula.

(2) Calculate the standard deviation of the difference between the standard moisture value and the measured moisture value for each of the 13 tests.

(3) Calculate the signal-to-noise for moisture at 5,000 ppmv using the data from the 5,000 ppmv tests.

e. The system suitability requirements for moisture for 0.01 cc and smaller:

(1) The calculated intercept of the moisture calibration curve shall be less than 500 ppmv and greater than –500 ppmv.

(2) The calculated slope of the moisture calibration curve shall be less than 1.2 and greater than 0.8.

(3) The standard deviation of the standard moisture values minus the measured moisture values, using all 13 test samples, shall be less than 300 ppmv and there shall be no more than 2 samples having a difference greater than 500 ppmv.

(4) R^2 shall be greater than 0.97.

(5) The signal-to-noise for moisture shall be greater than 20 for each of the five 5,000 ppmv tests.

Source: https://assist.dla.mil -- Downloaded: 2016-12-05T07:38Z
Check the source to verify that this is the current version before use.

2.1.2 Annual calibration for other gases. Calibration shall be required for all gases found in concentrations greater than .01 percent by volume. As a minimum, this shall include all gases listed in 3.b. The applicable gases shall be calibrated at approximately 1 percent concentrations with the exception of fluorocarbons, which may use a concentration of approximately 200 ppmv of a fluorocarbon compound by identifying masses 69 and 119; NH_3 which may use a concentration of approximately 200 ppmv; hydrogen, which may use a concentration of approximately 200 ppmv; nitrogen, which may use a concentration of approximately 80 percent; helium, which may use a concentration of approximately 10 percent; and oxygen, which may use a concentration of approximately 20 percent. A minimum detection limit evaluation shall be performed for other gases.

NOTE: It is recommended that the percentage of water vapor contained in a gas flowing through the gas humidifier be compared to the dewpoint sensor reading for accuracy of the sensor. The following equation may be used to calculate the percent of water vapor contained in a gas flowing through the gas humidifier.

$$\%H2O = \frac{100(Pv\text{mb})}{68.95\text{mb/psi}Pg + 1.33\text{mb/mm}Pa}$$

Where:

P_v = vapor pressure of water in the GPH based on water temperature in degrees Celsius.

P_g = gauge pressure in psi.

P_a = atmospheric pressure in mm Hg.

2.1.3 Daily calibration check. The system calibration shall be checked on the day of test prior to any testing. This shall include checking the calibration by in-letting a sample with a moisture level in the 4,500 to 5,500 ppmv range at the required volumes and comparing the result with the dew point hygrometer. The resulting moisture reading shall be within 250 ppmv of the moisture level in the calibration sample.

NOTE: Equipment error needs to be determined and subtracted from the allowed maximum deviation of 250 ppmv. The calibration check shall be performed using the same conditions used for testing devices (e.g. background pressure, background environment, time between sample inlets, package simulator volume etc.). Calibration performed on the day of test prior to any testing may be substituted for this calibration check. Calibration records shall be kept on a daily basis.

a. Performed on the day of test prior to any testing may be substituted for this calibration check.

b. Precision tuning shall be performed following significant maintenance or repair of the ion source.

c. A procedure for monitoring the tuning performance of the mass spectrometer shall be established, performed and documented on a daily basis.

d. A record of all changes made to the sensitivity factors shall be maintained in addition to a reason for the change.

e. All raw data, including test parameters used for the spectrometer, background spectra, test spectra, pressure readings, and calibration factors, shall be recorded for each test sample. The IGA lab shall retain the ability to review and recalculate the data in accordance with the archiving retention period requirements.

f. Mass resolution. The mass spectrometer shall be capable of resolving mass peaks to 1 AMU or less over the mass range.

Source: https://assist.dla.mil -- Downloaded: 2016-12-05T07:38Z
Check the source to verify that this is the current version before use.

3. Procedure. All devices shall be prebaked for 16 to 24 hours at 100°C ±5°C prior to test. The purpose of prebake is to ensure that the maximum amount of internal moisture has reached the vapor phase. Ovens shall have a means to indicate if a power interruption occurs during the prebaking period and for how long the temperature drops below 100°C ±5°C. Devices whose temperature drops below 100°C ±5°C for more than 1 hour shall undergo another prebake to begin a minimum of 12 hours later. If vacuum bake is used to prebake devices, extending the prebake time shall not be permitted as this can evacuate a significant quantity of the device's internal gas content (skewing the test results). If a power interruption occurs during vacuum bake, the test sequence must stop. For the purposes of Conformance Inspection, additional samples must be submitted.

A maximum 5 minute transfer time from prebake to hot insertion into apparatus shall be allowed. If 5 minutes is exceeded, device shall be returned to the prebake oven and prebake continued until device reaches 100°C ±5°C. The system shall be maintained at a stable temperature within the vacuum transfer passage equal to or above the device temperature. The fixturing in the vacuum transfer passage shall position the specimen as required by the piercing arrangement of 2.e, and maintain the device at 100°C ±5°C for a minimum of 10 minutes prior to piercing.

After device insertion, the device and chamber shall be pumped down and baked out at a temperature of 100°C ±5°C until the background pressure level will not prevent achieving the specified measurement accuracy and sensitivity. The background vacuum spectra shall be acquired and shall later be subtracted from the sample spectra. The device case or lid shall then be punctured and the following properties of the released gases shall be measured, using the mass spectrometer:

a. The water-vapor content of the released gases, as a percent or ppmv of the total gas content.

b. The proportions (by volume) of other gases: N_2, He, O_2, Ar, H_2, CO_2, CH_4, NH_3, and other primary sealing gases or solvents found. Calculations shall be made and reported on all gases detected and identified with reasonable certainty. Data reduction shall be performed in a manner, which will preclude the cracking pattern interference from other gas specie in the calculations. Data shall be corrected for any system dependent matrix effects such as the presence of hydrogen in the internal ambient.

c. The test chamber volume and the increase in chamber pressure as the gases are released by piercing the device package shall be measured and recorded. A pressure change of ±25 percent from expected for that package volume and pressurization may indicate that (1) the puncture was not fully accomplished, (2) the device package was not sealed hermetically, or (3) does not contain the normal internal pressure.

d. The test laboratory should provide comments describing the spectra of unknowns or gases that are present but not in sufficient concentration to be identified or quantified with reasonable certainty.

e. If the test laboratory has reason to believe that the test results may be invalid due to reasons such as improper puncture of the device or equipment malfunction, the results shall be reported as "no test" with additional comments provided. The device may be replaced with another.

f. In the event that the gases in the device have a significantly different gas matrix than the gas matrix used in the daily calibration check, the test laboratory shall conduct a calibration for moisture on the same day using a gas mixture similar to the gases found in the test device and shall recalculate the test results of the test device using the moisture sensitivity factor of that matrix.

NOTE: The device shall be hermetic in accordance with test method 1071 (fine and gross leak conditions) of this test method standard, and free from any surface contaminants which may interfere with accurate water vapor content measurement. The IGA laboratory is not required to test for hermeticity (read and record the exact measured air leak rate) in accordance with test method 1071 of this test method standard. Samples submitted for testing shall include the failure criteria information including any prior exposure to fluorocarbon leak testing and information about the manufacturing process, including sealing pressure, sealing gas, free internal cavity volume, lid thickness at puncture site, lid material, and the preferred location of the puncture site.

Source: https://assist.dla.mil -- Downloaded: 2016-12-05T07:38Z
Check the source to verify that this is the current version before use.

3.1 Failure criteria.

a. The IGA laboratory shall classify devices as passed or failed in accordance with the failure criteria specified in the IGA submission application, if any. In addition, any device exhibiting gas content or pressure reading indicative of a leak (see 1) shall be identified as a leaker and shall fail this test even when the failure criteria limits for an individual device: water vapor content (5,000 ppm or greater) oxygen content (10,000 ppm or greater), and fluorocarbon (leak test fluid, hydrocarbons, solvents, etc) content (50ppm or greater) have not been surpassed.

b. Sample size for IGA testing shall never allow any c = 1 criteria. Any failure requires investigative and corrective action by the manufacturer of all affected lots to eliminate the root cause of the IGA failure.

c. Any device exhibiting a pressure difference greater than 15 percent shall be considered a failure.

4. Implementation. Suitability for performing IGA analysis in accordance with this test method is granted by the qualifying activity for specific limits and volumes for the purpose of qualifying devices for the Department of Defense. The specification limit of 5,000 ppmv shall apply to all package volumes (unless otherwise specified), with the following correction factors permitted, to be used by the manufacturer provided they are documented and shown to be applicable:

a. For package volumes of any size sealed under vacuum conditions:

$$C_P = \frac{P_s}{P_a}$$

C_P = correction factor (pressure)

P_s = sealing pressure

P_a = atmospheric pressure (pressures may be in Torr or mm Hg).

The correction factor, if used, shall be applied as follows:

Water vapor (corrected) = water vapor (measured) x C_X; where C_X is the applicable correction factor.

b. If it is assumed that a device having 1 atmosphere of gas pressure and a moisture concentration of <=5,000 ppmv is a good acceptable criteria, then a device that was sealed under a partial vacuum "with the same moisture content (in moles)", then the equivalent acceptance criteria would be in accordance figure 1018–1. Figure 1018–1 could be used by the qualifying activity and the manufacturer to establish an acceptance criteria for a specific product line provided, however, that the product continued to be manufactured at the same, or lower pressure as agreed to and there was no outgassing in the cavity of the device. Figure 1018–1 applies to product sealed under positive pressure also. The pressure ratio shall be a determined comparison a similar device known to have 1 atmosphere.

Source: https://assist.dla.mil -- Downloaded: 2016-12-05T07:38Z
Check the source to verify that this is the current version before use.

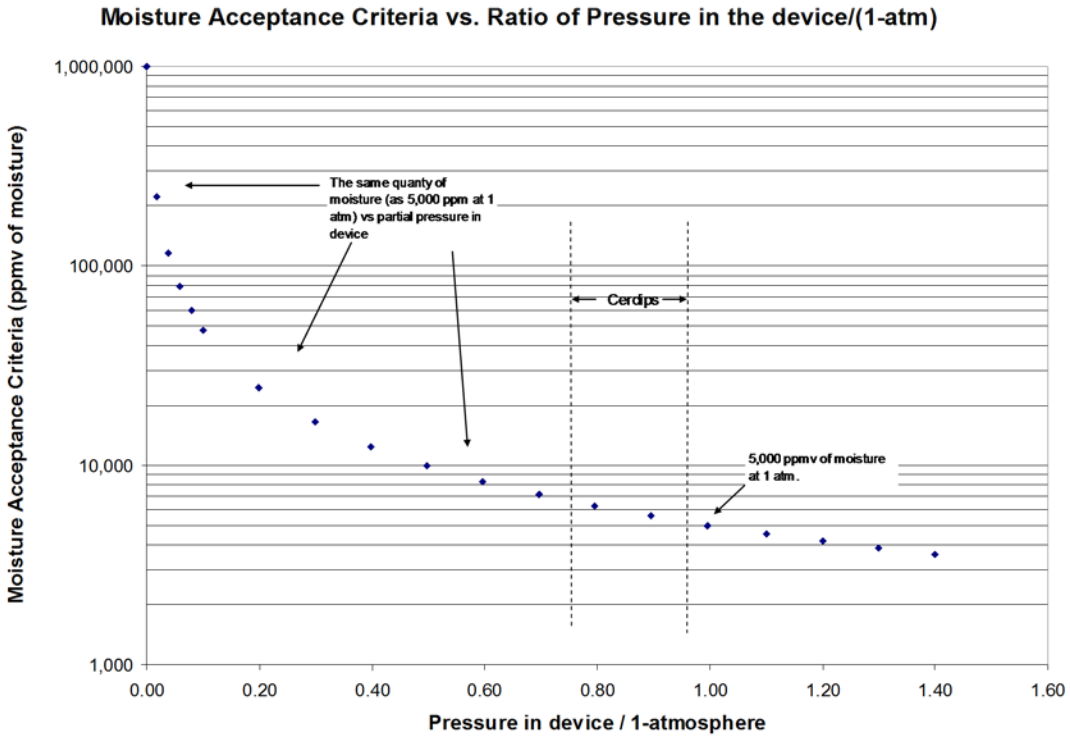

FIGURE 1018–1. Correction factor moisture acceptance criteria expressed graphically.

Information on current analytical laboratory suitability status can be obtained by contacting DLA Land and Maritime–VQE, P.O. Box 3990, Columbus, OH 43218-3990 or e-mail vqe.chief@dla.mil.

5. Summary. The following details shall be specified in the applicable performance specification sheet or acquisition document:

a. The maximum allowable water vapor content, if other than 5,000 ppmv;

b. the maximum allowable oxygen content, if other than 10,000 ppmv,

c. The maximum allowable fluorocarbon content, if other than 50 ppmv.

d. All other gas contents that represent a specific device failure.

Source: https://assist.dla.mil -- Downloaded: 2016-12-05T07:38Z
Check the source to verify that this is the current version before use.

This page is intentionally left blank.

Source: https://assist.dla.mil -- Downloaded: 2016-12-05T07:38Z
Check the source to verify that this is the current version before use.

METHOD 1019.5

STEADY–STATE TOTAL DOSE IRRADIATION PROCEDURE

1. Purpose. This test method defines the requirements for testing discrete packaged semiconductor devices for ionizing radiation (total dose) effects from a Cobalt-60 (^{60}Co) gamma ray source. In addition, this test method provides an accelerated annealing test for estimating low dose rate ionizing radiation effects on devices. This annealing test is important for low dose-rate or certain other applications in which devices may exhibit significant time dependent effects. This test method addresses only steady-state irradiations, and is not applicable to pulse type irradiations. This test method may produce severe degradation of the electrical properties of irradiated devices and thus should be considered a destructive test.

1.1 Definitions. Definitions of terms used in this test method are given below:

a. Ionizing radiation effects. The changes in the electrical parameters of a device resulting from radiation-induced charge. It is also referred to as total dose effects.

b. In-flux tests. Electrical measurements made on devices during radiation exposure.

c. Not in-flux tests. Electrical measurements made on devices at any time other than during irradiation.

d. Remote tests. Electrical measurements made on devices which are physically removed from the irradiation location for the measurements.

e. Time dependent effects. Significant changes in electrical parameters caused by the growth or annealing, or both, of radiation induced trapped charge and interface traps after irradiation. Similar effects also take place during irradiation.

f. Accelerated annealing test. A procedure utilizing elevated temperature to accelerate time-dependent effects.

g. Gray. The gray (Gy) is the SI unit of absorbed dose which has units of (joules/kilogram). It is the amount of radiation required to deposit one joule of energy in one kilogram of any kind of matter.

h. Rad. The rad is the traditional unit for absorbed dose, which has units of (joules/kilogram). It is the amount of radiation required to deposit 10 millijoules of energy deposited per kilogram. 100 rad is equal to 1.00 gray.

i. REM. The Roentgen equivalent man (REM) is another unit of equivalent dose. For x-rays it is equal to the rad or 10 millijoules of energy deposited per kilogram.

2. Apparatus. The apparatus shall consist of the radiation source, electrical test instrumentation, test circuit board(s), cable, interconnect board or switching system, if used, and appropriate dosimetry measurement system, if used. Adequate precautions shall be observed to obtain an electrical measurement system with sufficient insulation, ample shielding, satisfactory grounding, and with suitable low noise from the main power supply.

2.1 Radiation source. The radiation source used in the test shall be the uniform field of a ^{60}Co gamma ray source. Uniformity of the radiation field in the volume where devices are irradiated shall be within ±10 percent as measured by the dosimetry system, unless otherwise specified. The intensity of the gamma ray field of the ^{60}Co source shall be known with an uncertainty of no more than ±5 percent. Field uniformity and intensity can be affected by changes in the location of the device with respect to the radiation source and the presence of radiation absorption and scattering materials.

Source: https://assist.dla.mil -- Downloaded: 2016-12-05T07:38Z
Check the source to verify that this is the current version before use.

2.1.1 ^{60}Co source. The gamma ray field of a ^{60}Co source shall be calibrated at least every 3 years to an uncertainty of no more than ±5 percent as measured with an appropriate dosimetry system whose calibration is traceable to the NIST. Corrections for ^{60}Co source decay shall be made monthly.

2.2 Dosimetry system. An appropriate dosimetry system shall be provided which is capable of carrying out the measurements required in 3.3. The proper use of various dosimetry systems and the conversion of absorbed dose from one material to another are covered in ASTM E666, ASTM E668, ASTM E1249, ASTM E1250, ASTM E1275.

2.3 Electrical test instruments. All instrumentation used for electrical measurements shall have stability, accuracy, and resolution required for accurate measurement of the electrical parameters. Any instrumentation required to operate in a radiation environment above 10 REM (0.10 Gy) per hour shall be appropriately shielded, or the radiation level must be less than the instrumentation manufacturer's recommended maximum.

2.4 Test circuit board(s). Devices to be irradiated shall be mounted on, or connected to, test circuit boards together with any associated circuitry necessary for device biasing during irradiation or for in-site measurements. Unless otherwise specified, all device input terminals and any others which may affect the radiation response shall be electrically connected during irradiation, i.e., not left floating. The geometry and materials of the completed test circuit board shall allow uniform irradiation of the device under test (DUT). Good design and construction practices shall be used to prevent oscillations, minimize leakage currents, prevent electrical damage, and obtain accurate measurements. Only sockets, which are radiation resistant and do not exhibit significant leakages (relative to the DUT) shall be used to mount devices and associated circuitry to the test circuit board(s). All apparatus used repeatedly in radiation fields shall be checked periodically for physical or electrical degradation. Components which are placed on the test circuit board, other than DUTs, shall be insensitive to the accumulated radiation, or they shall be shielded from the radiation. Test fixtures shall be made such that materials will not perturb the uniformity of the radiation field intensity at the DUT. Leakage current shall be measured out of the radiation field. With no devices installed in the sockets, the test circuit board shall be connected to the test system such that all expected sources of noise and interference are operative. With the maximum specified bias for the device applied, the leakage current between any two terminals shall not exceed ten percent of the lowest current limit value in the pre-irradiation device specification. Test circuit boards used to bias devices during accelerated annealing must be capable of withstanding the temperature requirements of the accelerated annealing test and shall be checked before and after testing for physical and electrical degradation.

2.5 Cabling. Cables connecting the test circuit boards in the radiation field to the test instrumentation shall be as short as possible. If long cables are necessary, line drivers may be required. The cables shall have low capacitance and low leakage to ground, and low leakage between wires.

2.6 Interconnect or switching system. This system shall be located external to the radiation environment location, and provides the interface between the test instrumentation and the DUTs. It is part of the entire test system and subject to the limitation specified in 2.4 for leakage between terminals.

2.7 The environmental chamber. The environmental chamber for time-dependent effects.

3. Procedure. The devices shall be irradiated and subjected to accelerated annealing (if required for time-dependent effects testing) as specified by a test plan. This plan shall specify the device description, irradiation conditions, device bias conditions, dosimetry system, operating conditions, measurement parameters and conditions, and accelerated annealing test conditions (if required). See figure 1019–1 herein.

3.1 Sample selection and handling. Only devices which have passed the electrical specification as defined in the test plan shall be submitted to radiation testing. Unless otherwise specified, the test samples shall be randomly selected from the parent population and identically packaged. Each device shall be individually identifiable to enable pre- and post-irradiation comparison. For device types which are ESD sensitive, proper handling techniques shall be used to prevent damage to the devices.

Source: https://assist.dla.mil -- Downloaded: 2016-12-05T07:38Z
Check the source to verify that this is the current version before use.

3.2 Burn-in. For some devices, there are differences in the total dose radiation response before and after burn-in. Unless it has been shown by prior characterization or by design that burn-in has negligible effect (parameters remain within post-irradiation specified electrical limits) on the total dose radiation response, then one of the following shall be done:

a. The manufacturer shall subject the radiation samples to the specified burn-in conditions prior to conducting total dose radiation testing.

b. The manufacturer shall develop a correction factor (which is acceptable to the parties to the test), taking into account the changes in total dose response resulting from subjecting product to burn-in. The correction factor shall then be used to accept product for total dose response without subjecting the test samples to burn-in.

3.3 Dosimetry measurements. The radiation field intensity at the location of the DUT shall be determined prior to testing by dosimetry or by source decay correction calculations, as appropriate, to assure conformance to test level and uniformity requirements. The dose to the DUT shall be determined one of two ways: (1) by measurement during the irradiation with an appropriate dosimeter, or (2) by correcting a previous dosimetry value for the decay of the ^{60}Co source intensity in the intervening time. Appropriate correction shall be made to convert the measured or calculated dose in the dosimeter material to the dose in the DUT.

3.4 Lead/aluminum (Pb/Al) container. Test devices shall be enclosed in a Pb/Al container to minimize dose enhancement effects caused by low-energy, scattered radiation. A minimum of .059 inch (1.5 mm) Pb, surrounding an inner shield of at least .028 inch (0.7 mm) Al, is required. This Pb/Al container produces an approximate charged particle equilibrium for Si and for TLDs such as CaF_2. The radiation field intensity shall be measured inside the Pb/Al container: (1) initially, (2) when the source is changed, or (3) when the orientation of configuration of the source, container, or test fixture is changed. This measurement shall be performed by placing a dosimeter (e.g., a TLD) in the device irradiation container at the approximate test device position. If it can be demonstrated that low-energy scattered radiation is small enough that it will not cause dosimetry errors due to dose enhancement, the Pb/Al container may be omitted.

3.5 Radiation level(s). The test devices shall be irradiated to the dose level(s) specified in the test plan within ±10 percent. If multiple irradiations are required for a set of test devices, then the post-irradiation electrical parameter measurements shall be performed after each irradiation.

3.6 Radiation dose rate.

3.6.1 Condition A. The dose rate range shall be between 50 and 300 rads (Si)/s (0.5 and 3.0 Gy (Si)/s) for ^{60}Co. The dose rates may be different for each radiation dose level in a series; however, the dose rate shall not vary by more than ±10 percent during each irradiation.

3.6.2 Condition B. For condition B, for MOS devices only, if the maximum dose rate is less than 50 rad (Si)/s (0.5 Gy (Si)/s) in the intended application, the parties to the test may agree to perform the test at a dose rate greater than or equal to the maximum dose rate of the intended application. Unless the exclusions in 3.12.1.b are met, the accelerated annealing test of 3.12.2 shall be performed.

3.6.3 Condition C. As an alternative, the test may be performed at the dose rate of the intended application, if this is agreed to by the acquisition activity.

3.7 Temperature requirements. Since radiation effects are temperature dependent, DUTs shall be irradiated in an ambient temperature of +24°C ±6°C as measured at a point in the test chamber in close proximity to the test fixture. The electrical measurements shall be performed in an ambient temperature of +25°C ±5°C. If devices are transported to and from a remote electrical measurement site, the temperature of the test devices shall not be allowed to increase by more than +10°C from the irradiation environment. If any other temperature range is required, it shall be specified.

Source: https://assist.dla.mil -- Downloaded: 2016-12-05T07:38Z
Check the source to verify that this is the current version before use.

3.8 Electrical performance measurements. The electrical parameters to be measured, and functional tests to be performed, shall be specified in the test plan. As a check on the validity of the measurement system and pre- and post-irradiation data, at least one control sample shall be measured using the operating conditions provided in the governing device specifications. For automatic test equipment (ATE), there is no restriction on the test sequence provided that the rise in the device junction temperature is minimized. For manual measurements, the sequence of parameter measurements shall be chosen to allow the shortest possible measurement period. When a series of measurements is made, the tests shall be arranged so that the lowest power dissipation in the device occurs in the earliest measurements and the power dissipation increases with subsequent measurements in the sequence. The pre- and post-irradiation electrical measurements shall be done on the same measurement system and the same sequence of measurements shall be maintained for each series of electrical measurements of devices in a test sample. Pulse type measurements of electrical parameter should be used as appropriate to minimize heating and subsequent annealing effects. Devices which will be subjected to the accelerated annealing testing (see 3.12) may be given a pre-irradiation burn-in to eliminate burn-in related failures.

3.9 Test conditions The use of in-flux or not in-flux shall be specified in the test plan. (This may depend on the intended application for which the data is being obtained.) The use of in-flux testing may help to avoid variations introduced by post-irradiation time dependent effects. However, errors may be incurred for the situation where a device is irradiated in-flux with static bias, but where the electrical testing conditions require the use of dynamic bias for a fraction of the total irradiation period. Not in-flux testing generally allows for more comprehensive electrical testing, but can be misleading if significant post-irradiation time dependent effects occur.

3.9.1 In-flux testing. Each test device shall be checked for operation within specifications prior to being irradiated. After the entire system is in place for the in-flux radiation test, it shall be checked for proper interconnections, leakage (see 2.4), and noise level. To assure the proper operation and stability of the test setup, a control device with known parameter values shall be measured at all operational conditions called for in the test plan. This measurement shall be done either before the insertion of test devices or upon completion of the irradiation after removal of the test devices or both.

3.9.2 Remote testing. Unless otherwise specified, the bias shall be removed and the device leads placed in conductive foam (or similarly shorted) during transfer from the irradiation source to a remote tester and back again for further irradiation. This minimizes post-irradiation time dependent effects.

3.9.3 Bias and loading conditions. Bias conditions for test devices during irradiation or accelerated annealing shall be within ±10 percent of those specified by the test plan. (If known, the bias applied to the test devices shall be selected to produce the greatest radiation induced damage or the worst-case damage for the intended application.) The specified bias shall be maintained on each device in accordance with the test plan. Bias shall be checked immediately before and after irradiation. Care shall be taken in selecting the loading such that the rise in the junction temperature is minimized.

3.10 Post-irradiation procedure. Unless otherwise specified, the following time intervals shall be observed:

a. The time from the end of an irradiation to the start of electrical measurements shall be a maximum of 1 hour.

b. The time to perform the electrical measurements and to return the devices for a subsequent irradiation, if any, shall be within two 2 hours of the end of the prior irradiation.

To minimize time dependent effects, these intervals shall be as short as possible. The sequence of parameter measurements shall be maintained constant through the test series.

Source: https://assist.dla.mil -- Downloaded: 2016-12-05T07:38Z
Check the source to verify that this is the current version before use.

3.11 Extended room temperature anneal test. The tests of 3.1 through 3.10 are known to be overly conservative for some devices in a very low dose rate environment (e.g. dose rates characteristic of space missions). The extended room temperature anneal test provides an estimate of the performance of a device in a very low dose rate environment even though the testing is performed at a relatively high dose rate (e.g. 50 to 300 rad(Si)/s). The procedure involves irradiating the device in accordance with tests 3.1 through 3.10 and post-irradiation subjecting the DUT to a room temperature anneal for an appropriate period of time (see 3.11.2.c) to allow leakage related parameters that may have exceeded their pre-irradiation specification to return to within specification. The procedure is known to lead to a higher rate of device acceptance in cases:

a. Where device failure, when subjected to the tests in 3.1 through 3.10, has been caused by the buildup of trapped positive charge in relatively soft oxides and,

b. Where this trapped positive charge anneals at a relatively high rate.

3.11.1 Need to perform an extended room temperature anneal test. The following criteria shall be used to determine whether an extended room temperature anneal test is appropriate:

a. The procedure is only appropriate for MOS devices.

b. The procedure is appropriate where only parametric failures (as opposed to functional failure) occurs. The parties to the test shall take appropriate steps to determine that the DUT is subject to only parametric failure over the total ionizing dose testing range.

c. The procedure is appropriate where the natural annealing response of the DUT will serve to correct the out of specification of any parametric response. Further, the procedure is known to lead to a higher rate of device acceptance in cases where the expected application irradiation dose rate is sufficiently low that ambient temperature annealing of the radiation induced trapped positive charge can lead to a significant improvement of device behavior. Cases where the expected application dose rate is lower than the test dose rate, and lower than 0.1 rad(Si)/s (.0001 Gy (Si)/s), should be considered candidates for the application of this procedure. The parties to the test shall take appropriate steps to determine that the technology under test can provide the required annealing response over the total ionizing dose testing range.

3.11.2 Extended room temperature anneal test procedure. If the device fails the irradiation and testing specified in 3.1 through 3.10, an additional room temperature annealing test may be performed as follows:

a. Following the irradiation and testing of 3.1 through 3.10, subject the DUT to a room temperature anneal under worst-case static bias conditions. For information on worst case bias see 3.9.3.

b. The test will be carried out in such a fashion that the case of the DUT will have a temperature within the range 24°C ± 6°C.

c. Where possible, the room temperature anneal should continue for a length of time great enough to allow device parameters that have exceeded their pre-irradiation specification to return to within specification or post-irradiation parametric limit (PIPL) as established by the manufacturer. However, the time of the room temperature anneal shall not exceed t_{max}, where

$$t_{max} = \frac{D_{spec}}{R_{max}}$$

D_{spec} is the total ionizing dose specification for the part and R_{max} is the maximum dose rate for the intended use.

d. Test the DUT for electrical performance as specified in 3.7 and 3.8. If the DUT passes electrical performance tests following the extended room temperature anneal, this shall be considered acceptable performance for a very low dose rate environment in spite of having previously failed the post-irradiation and electrical tests of 3.1 through 3.10.

Source: https://assist.dla.mil -- Downloaded: 2016-12-05T07:38Z
Check the source to verify that this is the current version before use.

3.12 MOS accelerated annealing test. The accelerated annealing test provides an estimate of worst-case degradation of MOS devices in low dose rate environments. The procedure involves heating the device following irradiation at a specified temperature, time, and bias conditions. An accelerated annealing test (see 3.12.2) shall be performed for cases where time dependent effects (TDE) can cause a device to degrade significantly or fail. Only standard testing shall be performed as specified in 3.1 through 3.10 for cases where TDE are known not to cause significant device degradation or failure (see 3.12.1), or where they do not need to be considered, as specified in 3.12.1.

3.12.1 Need to perform accelerated annealing test. The parties to the test shall take appropriate steps to determine whether accelerated annealing testing is required. The following criteria shall be used:

a. The tests called out in 3.12.2 shall be performed for any MOS device.

b. TDE tests may be omitted if:

(1) The device does not contain MOS elements, or

(2) The ionizing dose in the application, if known, is below 5 krad(Si) (50 Gy (Si)/s), or

(3) The lifetime of the device from the onset of the irradiation in the intended application, if known, is short compared with TDE times, or

(4) The test is carried out at the dose rate of the intended application, or

(5) The device has been demonstrated via characterization testing not to exhibit TDE changes in device parameters greater than experimental error (or greater than an otherwise specified upper limit) and the variables that affect TDE response are demonstrated to be under control for the specific vendor processes.

c. This test method provides no guidance on the need to perform accelerated annealing tests on non-MOS devices.

3.12.2 Accelerated annealing test procedure. If the device passes the tests in 3.1 through 3.10, or if it passes 3.11 (if that procedure is used), to the total ionizing dose level specified in the test plan or device specification or drawing and the exclusions of 3.12.1 do not apply, the accelerated annealing test shall be conducted as follows:

a. Overtest. Irradiate each test device to an additional 0.5 times the specified dose using the standard test conditions (3.1 through 3.10). Note that no electrical testing is required at this time.

b. Accelerated annealing. Heat each test device under worst-case static bias conditions in an environmental chamber according to one of the following conditions:

(1) At 100°C ±5°C for 168 ±12 hours, or

(2) At an alternate temperature and time that has been demonstrated via characterization testing to cause equal or greater change in the parameter(s) of interest, in each test device as that caused by 3.12.2.b.1, or

(3) At an alternate temperature and time which will cause trapped hole annealing of greater than 60 percent and interface state annealing of less than 10 percent as determined via characterization testing.

c. Electrical testing. Following the accelerated annealing, the electrical test measurements shall be performed as specified in 3.8 and 3.9.

Source: https://assist.dla.mil -- Downloaded: 2016-12-05T07:38Z
Check the source to verify that this is the current version before use.

3.13 Bipolar transistor delta($1/h_{FE}$) post irradiation [h_{FE}] gain calculations. Bipolar transistors require special calculations to report their post-irradiation performance. One of the following two calculations may be required:

a. Delta($1/h_{FE}$): Let h_{FE1} be the measured h_{FE} at a specific test point (Vce, Ic) prior to irradiation. Let h_{FE2} be the measured h_{FE} post-irradiation at that same test point. Then: Delta($1/h_{FE}$) = $\Delta(1/h_{FE}) = 1/h_{FE2} - 1/h_{FE1}$ and is unitless as is h_{FE}.

   Example: h_{FE1} = 200 before irradiation and post-irradiation it has decreased to h_{FE2} = 125.
   Then: $\Delta\,(1/h_{FE}) = 1/125 - 1/200 = 0.00300$.

b. [h_{FE}] calculation is not a directly measured value of h_{FE} but, rather, a calculated value used by system analysis engineers. It signifies exactly how well the bipolar transistor will perform in the system after exposure to a radiation fluence. This [h_{FE}] is denoted in square brackets [ ] to delineate it from any measured value of h_{FE} and uses the calculated values from 3.13.a but adds one additional term. Calculate as follows:

   Let h_{FE}(min) be the pre-irradiation spec minimum h_{FE} limit at the same test point in 3.13.a.
   Then: [h_{FE}] = inverse { $\Delta(1/h_{FE}) + 1/h_{FE}$)min }

   Example: h_{FE}(min) = 100 and, in accordance with 3.13.a, $\Delta(1/h_{FE}) = 0.00300$.
   Then: [h_{FE}] = inverse { 0.00300 + 1/100 } = inverse { 0.003 + 0.01 } = 1 / { 0.013} = 76.92.

   Note that [h_{FE}] can never exceed h_{FE} (min)

c. When $\Delta(1/h_{FE})$, [h_{FE}] or both are required by the control specification, these calculations will only be required on the irradiation test samples. The test report in 3.14 shall then contain, in spreadsheet fashion, the appropriate pre and post h_{FE} measurements as well as the required calculation results. Unless otherwise specified, all test devices shall adhere to the specification maximum h_{FE} limits that were imposed pre-irradiation.

3.14 Test report. As a minimum, the report shall include the device type number, serial number, CAGE code of the manufacturer, package type, controlling specification, date code, and any other identifying numbers given by the manufacturer. The bias circuit, parameter measurement circuits, the layout of the test apparatus with details of distances and materials used, and electrical noise and current leakage of the electrical measurement system for in-flux testing shall be reported using drawings or diagrams as appropriate. Each data sheet shall include the test date, the radiation source used, the bias conditions during irradiation, the ambient temperature around the devices during irradiation and electrical testing, the duration of each irradiation, the time between irradiation and the start of the electrical measurements, the duration of the electrical measurements and the time to the next irradiation when step irradiations are used, the irradiation dose rate, electrical test conditions, dosimetry system and procedures, and the radiation test levels. The pre- and post-irradiation data shall be recorded for each part and retained with the parent population data in accordance with the requirements of MIL–PRF–19500. Any anomalous incidents during the test shall be fully documented and reported. The accelerated annealing procedure, if used, shall be described. Any other radiation test procedures or test data required for the delivery shall be specified in the device performance specification sheet, drawing, or order.

Source: https://assist.dla.mil -- Downloaded: 2016-12-05T07:38Z
Check the source to verify that this is the current version before use.

4. Summary. The following details shall be specified in the applicable performance specification sheet or acquisition document as required.

a. Device–type number(s), quantity, and governing specification (see 3.1).

b. Radiation dosimetry requirements (see 3.3).

c. Radiation test levels including dose and dose rate (see 3.5 and 3.6).

d. Irradiation, electrical test, and transport temperature; if other than as specified in 3.7.

e. Electrical parameters to be measured and device operating conditions during measurement (see 3.8).

f. Test conditions, i.e., in-flux or not in-flux type tests (see 3.8 and 3.9).

g. Bias conditions for devices during irradiation (see 3.9.3).

h. Time intervals of the post-irradiation measurements (see 3.10).

i. Requirement for extended room temperature anneal test, if required (see 3.11).

j. Requirement for accelerated annealing test, if required (see 3.12).

k. Documentation required to be delivered with devices (see 3.14).

Source: https://assist.dla.mil -- Downloaded: 2016-12-05T07:38Z
Check the source to verify that this is the current version before use.

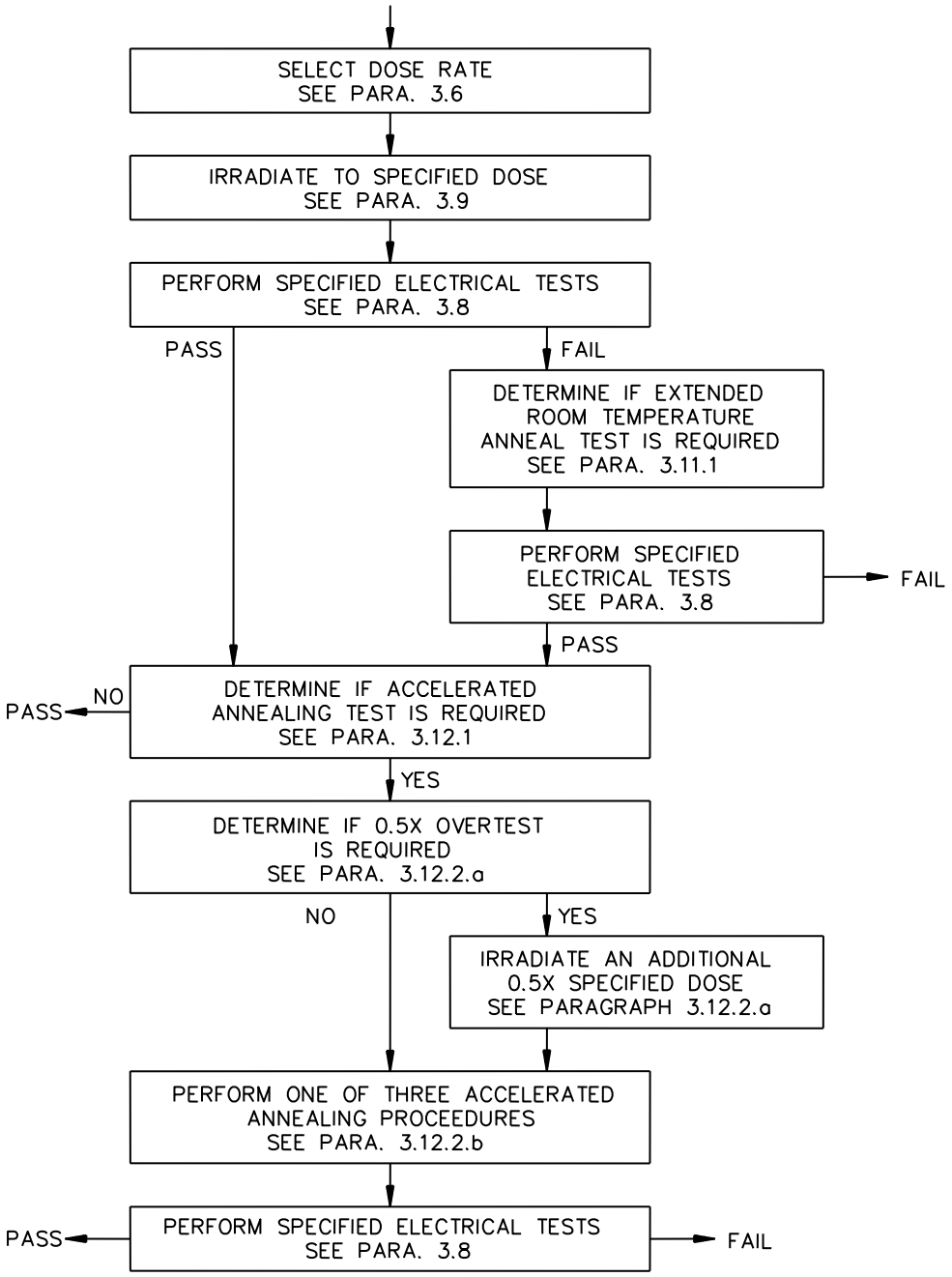

FIGURE 1019–1. Flow diagram for ionizing radiation test procedure.

Source: https://assist.dla.mil -- Downloaded: 2016-12-05T07:38Z
Check the source to verify that this is the current version before use.

This page is intentionally left blank.

Source: https://assist.dla.mil -- Downloaded: 2016-12-05T07:38Z
Check the source to verify that this is the current version before use.

METHOD 1020.3

ELECTROSTATIC DISCHARGE SENSITIVITY (ESD) CLASSIFICATION

1. Purpose. This test method establishes the procedure for classifying semiconductor devices according to their susceptibility to damage or degradation by exposure to electrostatic discharge (ESD). This classification is used to specify appropriate packaging and handling requirements in accordance with MIL–PRF–19500, and to provide classification data to meet the requirements of MIL–STD–1686.

1.1 Definitions. The following definition shall apply for the purposes of this test method.

1.1.1 ESD. A transfer of electrostatic charge between two bodies at different electrostatic potentials.

2. Apparatus.

2.1 Test apparatus. ESD pulse simulator and device under test (DUT) socket equivalent to the circuit of figure 1020–1, and capable of supplying pulses with the characteristics required by figure 1020–2.

2.2 Measurement equipment. Equipment, including an oscilloscope and current probe, to verify conformance of the simulator output pulse to the requirements of figure 1020–2.

2.2.1 Oscilloscope and amplifier. The oscilloscope and amplifier combination shall have a 350 MHz minimum bandwidth and a visual writing speed of 4 cm/ns minimum.

2.2.2 Current probe. The current probe shall have a minimum bandwidth of 350 MHz (e.g., Tektronix CT-1 at 1,000 MHz).

2.2.3 Charging of voltage probe. The charging voltage probe shall have a minimum input resistance of 1,000 M Ω and a division ratio of 4 percent maximum (e.g., HP 34111A).

2.3 Calibration. Periodic calibration shall include, but not be limited to, the following.

2.3.1 Charging voltage. The meter used to display the simulator charging voltage shall be calibrated to indicate the actual voltage at terminals C and D of figure 1020–1, over the range specified in table 1020–I.

2.3.2 Effective capacitance. Effective capacitance shall be determined by charging C1 to the specified voltage (see table 1020–I), with no device in the test socket and the test switch open, and by discharging C1 into an electrometer, coulombmeter, or calibrated capacitor connected between terminals A and B of figure 1020–1. The effective capacitance shall be 100 pF ±10 percent over the specified voltage range and shall be periodically verified at 1,000 volts. (NOTE: A series resistor may be needed to slow the discharge and obtain a valid measurement.)

2.3.3 Current waveform. The procedure of 3.2 shall be performed for each voltage step of table 1020–I. The current waveform at each step shall meet the requirements of figure 1020–2.

2.4 Qualification. Apparatus acceptance tests shall be performed on new equipment or after major repair. Testing shall include, but not be limited to, the following.

2.4.1 Current waveform verification. Current waveform shall be verified at every pin of each test fixture using the pin nearest terminal B (see figure 1020–1) as the reference point. All waveforms shall meet the requirements of figure 1020–2. The pin pair representing the worst case (closest to the limits) waveform shall be identified and used for the verification required by 3.2.

Source: https://assist.dla.mil -- Downloaded: 2016-12-05T07:38Z
Check the source to verify that this is the current version before use.

3. Procedure.

3.1 General.

3.1.1 Test circuit. Classification testing shall be performed using a test circuit equivalent to figure 1020–1 to produce the waveform shown on figure 1020–2.

3.1.2 Test temperature. Each device shall be stabilized at room temperature prior to and during testing.

3.1.3 ESD classification testing. ESD classification testing of devices shall be considered destructive.

3.2 ESD simulator current waveform verification. To ensure proper simulator operation, the current waveform verification procedure shall be done, as a minimum, at the beginning of each shift when ESD testing is performed, or prior to testing after each change of the socket/board, whichever is sooner. At the time of initial facility certification and recertifications, photographs shall be taken of the waveforms observed as required by 3.2.c. through 3.2.e. and be kept on file for purposes of audit and comparison. (Stored digitized representations of the waveforms are acceptable in place of photographs.)

a. With the DUT socket installed on the simulator, and with no DUT in the socket, place a short (see figure 1020–1) across two pins of the DUT socket and connect one of the pins to simulator terminal A and the other pin to terminal B.

b. Connect the current probe around the short near terminal B (see figure 1020–1). Set the simulator charging voltage source V_S to 4,000 volts corresponding to step 4 of table 1020–I.

c. Initiate a simulator pulse and observe the leading edge of the current waveform. The current waveform shall meet the rise time, peak current, and ringing requirements of figure 1020–2.

d. Initiate a simulator pulse again and observe the complete current waveform. The pulse shall meet the decay time and ringing requirement of figure 1020–2.

e. Repeat the above verification procedure using the opposite polarity (V_S = 4,000 volts).

f. It is recommended that the simulator output be checked to verify that there is only one pulse per initiation, and that there is no pulse while capacitor C1 is being charged. To observe the recharge transient, set the trigger to the opposite polarity, increase the vertical sensitivity by approximately a factor of ten, and initiate a pulse.

TABLE 1020–I. Simulator charging voltage (V_S) steps versus peak current (I_P).

Step	V_S (volts)	I_P (amperes)
1	500	0.33
2	1,000	0.67
3	2,000	1.33
4	4,000	2.67

Source: https://assist.dla.mil -- Downloaded: 2016-12-05T07:38Z
Check the source to verify that this is the current version before use.

3.3 Classification testing.

a. A sample of devices (see 4.c) shall be characterized for the device ESD failure threshold using the voltage steps shown in table 1020–I, as a minimum. Finer voltage steps may optionally be used to obtain a more accurate measure of the failure voltage. Testing may begin at any voltage step, except for devices which have demonstrated healing effects, including those with spark gap protection, which shall be started at the lowest step. Examination of known technology family input or output V/I damage characteristics (i.e., curve tracer), or other simplified test verification techniques may be used to validate the failure threshold (e.g., cumulative damage effects may be eliminated by retesting at the failure voltage step using a new sample of devices and possibly passing the step).

b. A new sample of devices shall be selected and subjected to the next lower voltage step used. Each device shall be tested using three positive and three negative pulses using each of the pin combinations shown in table 1020–II. A minimum of one-second delay shall separate the pulses.

c. The sample device shall be electrically tested to group A, subgroup II of the performance specification sheet as applicable (room temperature dc parameters).

d. If one or more of the devices fail, the testing of 3.3.b and 3.3.c shall be repeated at the next lower voltage step used.

e. If none of the devices fail, record the failure threshold determined in 3.3.a. Note the highest step passed and use it to classify the device in accordance with table 1020–III.

TABLE 1020–II. Junction polarities for ESD conditions test.

Device type	Junction/polarity
Bipolar transistor (NPN)	All possible pin-pair combinations.
Bipolar transistor (PNP)	All possible pin-pair combinations.
Junction FET's (N-channel)	All possible pin-pair combinations.
Junction FET's (P-channel)	All possible pin-pair combinations.
MOSFET's (N- or P-channel)	All possible pin-pair combinations.
Gate protected FET's (P-channel)	All possible pin-pair combinations.
Rectifiers (include hot carrier and Schottky)	All possible pin-pair combinations.
Thyristors	All possible pin-pair combinations.
Unijunctions	All possible pin-pair combinations.
Darlingtons	All possible pin-pair combinations.
Small signal diodes	All possible pin-pair combinations.

3.4 Pin combinations to be tested. Using table 1020–II, select the terminal to be used for the ESD tests.

Source: https://assist.dla.mil -- Downloaded: 2016-12-05T07:38Z
Check the source to verify that this is the current version before use.

TABLE 1020–III. Device ESD failure threshold classification.

Classification	Voltage
Class 0	Passes after exposure to any ESD pulse of 250 V or less.
Class 1A	Any part that passes after exposure to an ESD pulse of 250 V but fails after exposure an ESD pulse of 500 V.
Class 1B	Any part that passes after exposure to an ESD pulse of 500 V but fails after exposure to an ESD pulse of 1,000 V.
Class 1C	Any part that passes after exposure to an ESD pulse of 1,000 V but fails after exposure to an ESD pulse of 2,000 V.
Class 2	Any part that passes after exposure to an ESD pulse of 2,000 V but fails after exposure to an ESD pulse of 4,000 V.
Class 3A	Any part that passes after exposure to an ESD pulse of 4,000 V but fails after exposure to an ESD pulse of 8,000 V.
Class 3B	Any part that passes after exposure to an ESD pulse of 8,000 V but fails after exposure to an ESD pulse of 16,000 V.
Nonsensitive	Any part that passes after exposure to an ESD pulse above 16,000 V.

3.5 Classification criteria. All devices subjected to this test shall be considered destroyed and shall not be shipped for use in any application.

4. Summary. The following details shall be specified in the applicable performance specification sheet, acquisition document, order or contract, if other than specified herein:

a. Post test electricals.

b. Special additional or substitute pin combinations, if applicable.

c. Sample size, if other than three devices.

Source: https://assist.dla.mil -- Downloaded: 2016-12-05T07:38Z
Check the source to verify that this is the current version before use.

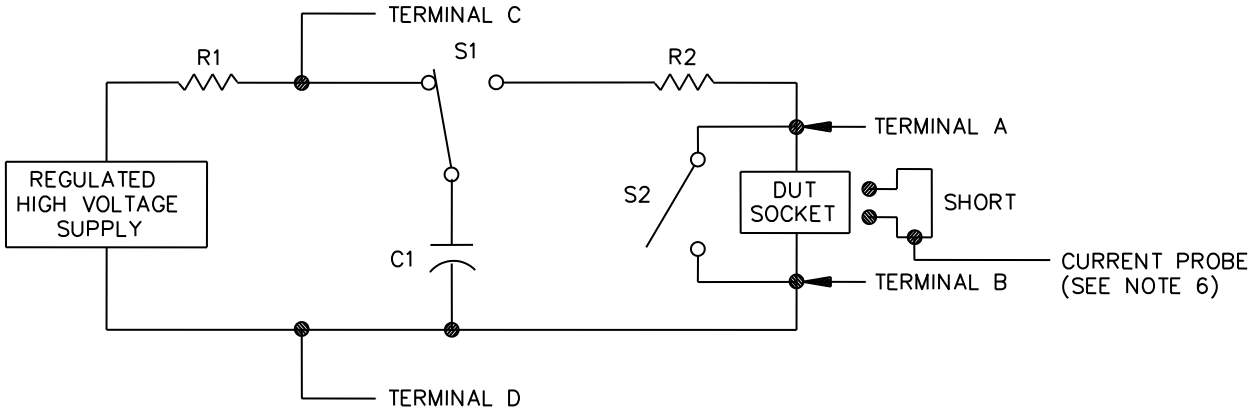

R1 = 10^6 Ω to 10^7 Ω
C1 = 100 pF ±10 percent (Insulation resistance 10^{12} Ω minimum)

R2 = 1,500 Ω ±1 percent
S1 = High voltage relay (Bounceless, mercury wetted, or equivalent

S2 = Normally closed switch (Open during discharge pulse and capacitance measurement)

NOTES:

1. The performance of this simulator circuit is strongly influenced by parasitics. Capacitances across relays and resistor terminals, and series inductance in wiring and in all components, shall be minimized.
2. As a precaution against transients upon recharge of C1, the supply voltage V_S may be reduced before switch S1 is returned to the charging position.
3. Piggybacking DUT sockets is not permitted during verification or classification testing.
4. Switching terminals A and B internal to the simulator to obtain opposite polarity is not recommended.
5. C1 represents the effective capacitance (see 2.3.2).
6. The current probe connection shall be made with double shielded cable into a 50 Ω termination at the oscilloscope. The cable length shall not exceed 3 feet (91.44 cm).

FIGURE 1020–1. ESD classification test circuit (human body model).

Source: https://assist.dla.mil -- Downloaded: 2016-12-05T07:38Z
Check the source to verify that this is the current version before use.

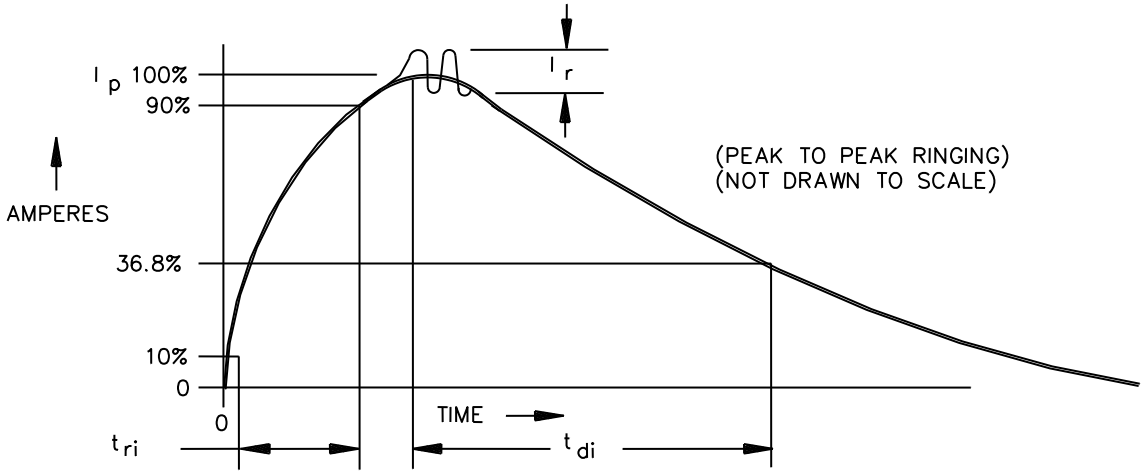

CURRENT WAVEFORM

NOTES:

1. The current waveforms shown shall be measured as described in the waveform verification procedure of 3.2, using equipment meeting the requirements of section 2 herein.
2. The current pulse shall have the following characteristics:

t_{ri} (rise time) - - - - - - -	Less than 10 ns.
t_{di} (delay time) - - - - - -	150 ±20 ns.
I_p (peak current) - - - - -	Within ±10 percent of the I_P value shown in table 1020–II for the voltage step selected.
I_r (ringing) - - - - - - - -	The decay shall be smooth, with ringing, break points, double time constants, or discontinuities less than 15 percent I_p maximum, but not observable 100 ns after start of the pulse.

FIGURE 1020–2. ESD classification test circuit waveforms (human body model).

Source: https://assist.dla.mil -- Downloaded: 2016-12-05T07:38Z
Check the source to verify that this is the current version before use.

METHOD 1021.3

MOISTURE RESISTANCE

1. Purpose. The moisture resistance test is performed for the purpose of evaluating, in an accelerated manner, the resistance of semiconductor devices and constituent materials to the deteriorative effects of the high humidity and heat conditions typical of tropical environments. Most tropical degradation results directly or indirectly from absorption of moisture vapor and films by vulnerable insulating materials, and from surface wetting of metals and insulation. These phenomena produce many types of deterioration, including corrosion of metals; constituents of materials; and detrimental changes in electrical properties. This test method differs from the steady-state humidity test and derives its added effectiveness in its employment of temperature cycling, which provides alternate periods of condensation and drying essential to the development of the corrosion processes and, in addition, produces a "breathing" action of moisture into partially sealed containers. Increased effectiveness is also obtained by use of a higher temperature, which intensifies the effects of humidity. The test method includes a low temperature subcycle that acts as an accelerator to reveal otherwise indiscernible evidences of deterioration since stresses caused by freezing moisture tend to widen cracks and fissures. As a result, the deterioration can be detected by the measurement of electrical characteristics (including such tests as voltage breakdown and insulation resistance) or by performance of a test for sealing. Provision is made for the application of a polarizing voltage across insulation to investigate the possibility of electrolysis, which can promote eventual dielectric breakdown. This test method also provides for electrical loading of certain components, if desired, in order to determine the resistance of current-carrying components, especially fine wires and contacts, to electrochemical corrosion. Results obtained with this test method are reproducible and have been confirmed by investigations of field failures. This test method has proved reliable for indicating those devices which are unsuited for tropical field use.

2. Apparatus. The apparatus used for the moisture resistance test shall include temperature-humidity chambers capable of maintaining the cycles and tolerance described on figure 1021–1 and electrical test equipment capable of performing the measurements in 3.7 and 4.

3. Procedure. Devices shall be tested in accordance with 3.2 through 3.7 inclusive, and figure 1021–1. Devices shall be mounted in a manner that will expose them to the test environment.

3.1 Initial conditioning. Unless otherwise specified and prior to mounting devices for the moisture resistance test, the device leads shall be subjected to a bending stress, initial conditioning in accordance with test condition E of test method 2036 of this multipart test method standard. Where the specific sample devices being subjected to the moisture resistance test have already been subjected to the required initial conditioning, as part of another test employing the same sample devices, the lead bend need not be repeated.

3.2 Initial measurements. Prior to step 1 of the first cycle, the specified initial measurements shall be made at room ambient conditions, or as specified. When specified, the initial conditioning in a dry oven (see figure 1021–1) shall precede initial measurements and the initial measurements shall be completed within 8 hours after removal from the drying oven.

3.3 Number of cycles. Devices shall be subjected to ten continuous cycles, each as shown on figure 1021–1. In the event of no more than one unintentional test interruption (power interruption or equipment failure) prior to the completion of the specified number of cycles (except for the last cycle) the cycle shall be repeated and the test may continue. Unintentional interruptions occurring during the last cycle require a repeat of the cycle plus an additional uninterrupted cycle. Any intentional interruption, or any unintentional interruption of greater than 24 hours, requires completion of missing cycles plus one additional cycle.

Source: https://assist.dla.mil -- Downloaded: 2016-12-05T07:38Z
Check the source to verify that this is the current version before use.

3.4 Subcycle of step 7. During at least five of the ten cycles, a low temperature subcycle shall be performed. At least 1 hour, but not more than 4 hours, after step 7 begins, the devices shall be either removed from the humidity chamber, or the temperature of the chamber shall be reduced, for performance of the subcycle. Devices during the subcycle shall be conditioned at –10°C +2°C, –5°C, with humidity not controlled, for 3 hours minimum as indicated on figure 1021–1. When a separate cold chamber is not used, care should be taken to assure that the devices are held at –10°C +2°C, –5°C for the full period. After the subcycle, the devices shall be returned to +25°C at 80 percent RH minimum and kept there until the next cycle begins.

3.5 Applied voltage. During the moisture resistance test as specified on figure 1021–1, when specified (see 4), the device shall be biased in accordance with the specified bias configuration which should be chosen to maximize the voltage differential between chip metallization runs or external terminals, minimize power dissipation, and to utilize as many terminals as possible to enhance test results.

3.6 Conditions (see figure 1021–1). The rate of change of temperature in the chamber is unspecified; however, devices shall not be subject to the radiant heat from the chamber conditioning processes. Unless otherwise specified, the circulation of air in the chamber shall be at a minimum cubic rate per minute equivalent to five times the volume of the chamber. The steady-state temperature tolerance is ±2°C of the specified temperature at all points within the immediate vicinity of the devices and at the chamber surfaces. Devices weighing 25 pounds or less shall be transferred between temperature chambers in less than 2 minutes.

3.7 Final measurements. Following step 6 of the final cycle (or step 7 if the subcycle of 3.3 is performed during the tenth cycle), devices shall be conditioned for 24 hours at room ambient conditions after which either an insulation resistance test in accordance with test method 1016, or the specified +25°C electrical end-point measurements shall be performed. Electrical measurements may be made during the 24 hour conditioning period. However, any failures resulting from this testing shall be counted, and any retesting of these failures later in the 24 hour period for the purpose of obtaining an acceptable result is prohibited. No other test (e.g., seal) shall be performed during the 24 hour conditioning period. The insulation resistance test or the alternative +25°C electrical end-point measurements shall be completed within 48 hours after removing the devices from the chamber. When the insulation resistance test is performed, the measured resistance shall be no less than 10 MΩ and the test shall be recorded and data submitted as part of the end-point data. If the package case is electrically connected to the die substrate by design, the insulation resistance test shall be omitted and the specified +25°C electrical end-point measurements shall be completed within 48 hours after removal of the device from the chamber. A visual examination and any other specified end-point electrical parameter measurements (see 4.c) shall also be performed.

3.8 Failure criteria. No device shall be acceptable that exhibits:

a. Specified markings which are missing in whole or in part, faded, smeared, blurred, shifted, or dislodged to the extent that they are not legible. This examination shall be conducted with normal room lighting and with a magnification of 1X to 3X.

b. Evidence of corrosion over more than five percent of the area of the finish or base metal of any package element (i.e., lid, lead, or cap) or any corrosion that completely crosses the element when viewed with a magnification of 10X to 20X.

c. Leads missing, broken, or partially separated.

d. Corrosion formations which bridge between leads, or between leads and metal case.

e. Electrical end-point or insulation resistance test failures.

NOTE: The finish shall include the package and entire exposed lead area from meniscus to the lead tip (excluding the sheared off tip itself) and all other exposed metal surfaces.

Source: https://assist.dla.mil -- Downloaded: 2016-12-05T07:38Z
Check the source to verify that this is the current version before use.

4. Summary. The following details shall be specified in the applicable performance specification sheet or acquisition document:

a. Initial measurements and conditions, if other than room ambient see 3.1.

b. Applied voltage, when applicable see 3.5, and bias configuration, when required. This bias configuration shall be chosen in accordance with the following guidelines:

(1) Only one supply voltage (V) either positive or negative is required, and an electrical ground (GND) or common terminal. The magnitude of V will be the maximum such that the specified absolute maximum ratings are not exceeded and test conditions are optimized.

(2) Unless otherwise specified, all normally specified voltage terminals and ground leads shall be connected to GND.

(3) Unless otherwise specified, all data inputs shall be connected to V. The polarity and magnitude of V is chosen to minimize internal power dissipation and current flow into the device. Unless otherwise specified, all extender inputs shall be connected to GND.

(4) All additional leads (e.g. clock, set, reset, outputs) considered individually, shall be connected to V or GND, whichever minimizes current flow.

(5) Leads with no internal connection shall be biased to V or GND whichever is opposite to an adjacent lead.

c. Final measurements (see 3.7). Final measurements shall include all electrical characteristics and parameters which are specified as end-point electrical parameters.

d. Number of cycles, if other than ten see 3.3.

e. Conditioning in dry oven before initial measurements, if required see 3.2.

Source: https://assist.dla.mil -- Downloaded: 2016-12-05T07:38Z
Check the source to verify that this is the current version before use.

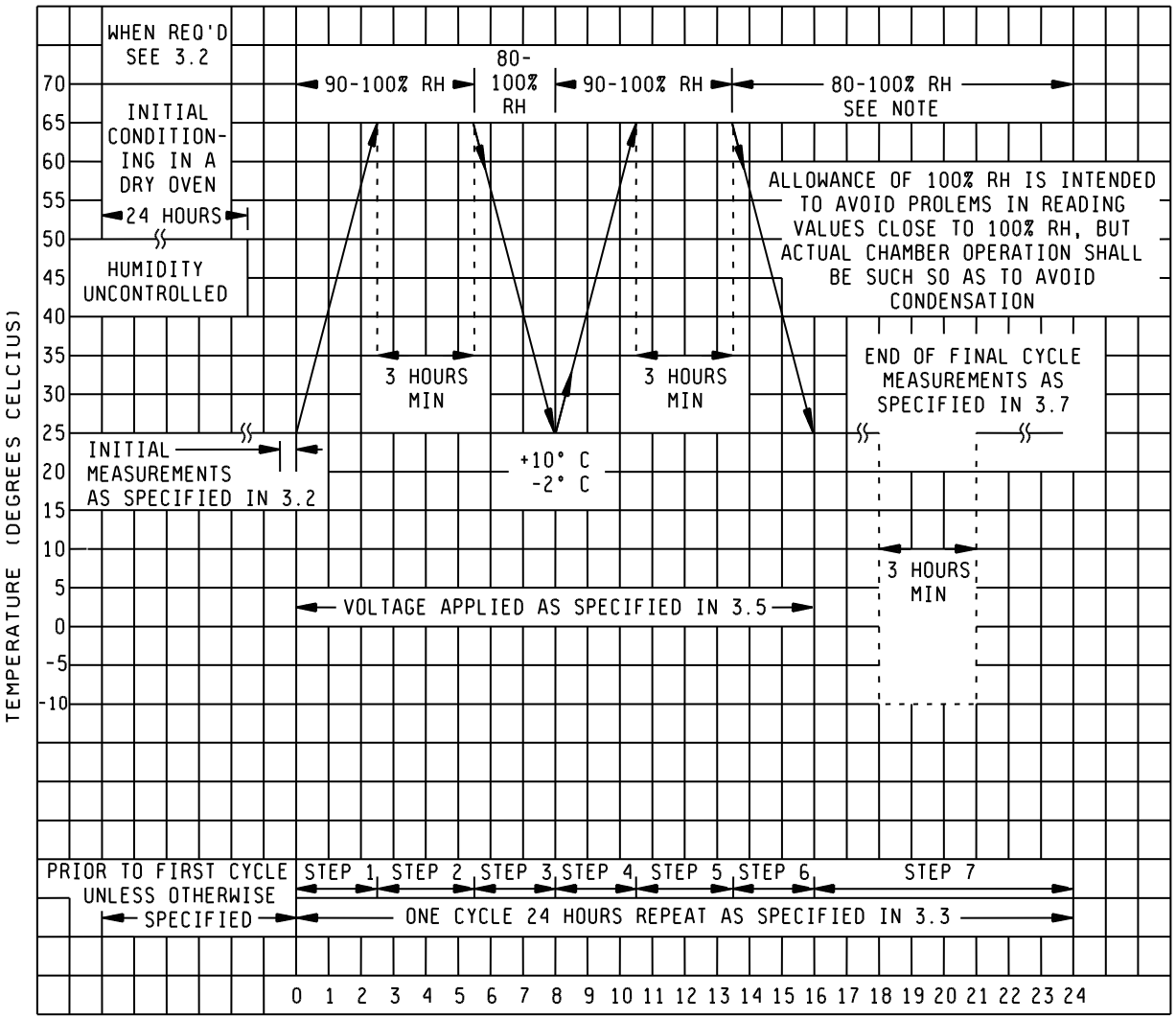

NOTE: The subcycle of step 7 (see 3.4) shall be performed for a minimum of five of the ten cycles. Humidity is uncontrolled for the –10°C portion of step 7.

FIGURE 1021–1. Graphical representation of moisture-resistance test.

Source: https://assist.dla.mil -- Downloaded: 2016-12-05T07:38Z
Check the source to verify that this is the current version before use.

METHOD 1022.5

RESISTANCE TO SOLVENTS

1. Purpose. The purpose of this test method is to verify that the markings will not become illegible on the semiconductor devices when subjected to solvents. The solvents will not cause deleterious, mechanical or electrical damage, or deterioration of the materials or finishes.

1.1 Formulation of solvents. The formulation of solvents herein is considered typical and representative of the desired stringency as far as the usual coatings and markings are concerned. Many available solvents which could be used are either not sufficiently active, too stringent, or even dangerous to humans when in direct contact or when the fumes are inhaled.

1.2 Check for conflicts. When this test method is referenced, care should be exercised to assure that conflicting requirements, as far as the properties of the specified finishes and markings are concerned, are not invoked.

2. Materials.

2.1 Solvent solutions. The solvent solutions used in this test shall consist of the following:

a. A mixture consisting of the following:

(1) One part by volume of isopropyl alcohol, A.C.S. (American Chemical Society) Reagent Grade, or isopropyl alcohol in accordance with TT–I–735, grade A or B.

(2) Three parts by volume of mineral spirits in accordance with MIL–PRF–680, type II, grade A, or three parts by volume of a mixture of 80 percent by volume of kerosene and 20 percent by volume ethylbenzene.

b. A semiaqueous based solvent (defluxer (e.g., a turpene)) consisting of a minimum of 60 percent Limonene and a surfactant heated to +32°C ±5°C or any equivalent Environmental Protection Agency (EPA) approved Hydrochlorofluorocarbons (HCFC) or terpene solvent or demonstrated equivalent.

c. At +63°C to +70°C, a mixture consisting of the following: 2/

(1) 42 parts by volume of deionized water.

(2) 1 part by volume of propylene glycol monomethyl ether.

(3) 1 part by volume of monoethanolamine.

NOTE: Normal safety precaution for handling this solution (e.g., same as those for diluted ammonium hydroxide) based on Occupational Safety and Health Administration (O.S.H.A.) rules for monoethanolamine.

2.1.1 Solvent solutions, safety aspects. Solvent solutions listed in 2.1 herein exhibit some potential for health and safety hazards. The following safety precautions should be observed:

a. Avoid contact with eyes.

b. Avoid prolonged contact with skin.

c. Provide adequate ventilation.

Source: https://assist.dla.mil -- Downloaded: 2016-12-05T07:38Z
Check the source to verify that this is the current version before use.

d. Avoid open flame.

e. Avoid contact with very hot surfaces.

2.2 Vessel. The vessel shall be a container made of inert material and of sufficient size to permit complete immersion of the specimens in the solvent solutions specified in 2.1.

2.3 Brush. The brush shall be a brush with a handle made of a nonreactive material. The brush shall have three long rows of hard bristles, the free ends of which shall lie substantially in the same plane. The brush shall be used exclusively with a single solvent and when there is any evidence of softening, bending, wear, or loss of bristles, it shall be discarded.

3. Procedure. The specimens subjected to this test shall be divided into three groups. Metal lidded leadless chip carrier (LCC) packages shall be preconditioned by immersing the specimens in room temperature ROL1 flux in accordance with J–STD–004 for 5 to 10 seconds. The specimens shall then be subjected to an ambient temperature of +215°C ±5°C for 60 seconds +5, –0 seconds. After the preconditioning, each device lid shall be cleaned with isopropyl alcohol. Each group shall be individually subjected to one of the following procedures:

a. The first group shall be subjected to the solvent solution as specified in 2.1.a. maintained at a temperature of +25°C ±5°C.

b. The second group shall be subjected to the solvent solution as specified in 2.1.b maintained at a temperature of +32°C ±5°C.

c. The third group shall be subjected to the solvent solution as specified in 2.1.c maintained at a temperature of +63°C to +70°C.

The specimens and the bristle portion of the brush shall be completely immersed for 1 minute minimum in the specified solution contained in the vessel specified in 2.2. Immediately following immersion, the specimen shall be brushed with normal hand pressure (approximately 2 to 3 ounces) for ten strokes on the portion of the specimen where marking has been applied, with the brush specified in 2.3. Immediately after brushing, the above procedure shall be repeated two additional times, for a total of three immersions followed by brushings. The brush stroke shall be directed in a forward direction, across the surface of the specimen being tested. After completion of the third immersion and brushing, specimens shall be rinsed and all surfaces air blown dry. After 5 minutes, the specimens shall be examined to determine the extent, if any, of deterioration that was incurred.

3.1 Optional procedure for the third group. The specimens shall be located on a test surface of known area which is located 6 ±1 inches (15.24 ±2.54 centimeters) below a spray nozzle(s) which discharges 0.139 gpm (0.6 ±.0.02 liters/ minute) of solution (see 2.1.c) 1 square inches (6.5 square centimeters) of surface area at a pressure of 20 ±5 psia (137.90 ±34.47 kPal). The specimens shall be subjected to this spray for a period of 10 minutes minimum. Within five minutes after removal of the specimens, they shall be examined in accordance with 3.1.1. The specimens may be rinsed with clear water and air blown dried prior to examination.

3.1.1 Failure criteria. After subject to the test, evidence of damage to the specimen and any specified markings which are missing in whole or in part, faded, smeared, blurred, or shifted (dislodged) to the extent that they cannot be readily identified from a distance of at least 6 inches (15.24 cm) with normal room lighting, and without the aid of magnification, or with a viewer having a magnification no greater than 3X, shall constitute a failure.

4. Summary. The number of specimens to be tested shall be specified in the applicable performance specification sheet or acquisition document (see 3).

Source: https://assist.dla.mil -- Downloaded: 2016-12-05T07:38Z
Check the source to verify that this is the current version before use.

METHOD 1026.5

STEADY–STATE OPERATION LIFE

1. Purpose. The purpose of this test method is to determine compliance with the specified lambda (λ) for semiconductor devices subjected to the specified conditions.

2. Procedure. The device shall be subjected to the steady-state operation life test at the temperature specified for the time period in accordance with the life test requirements of MIL–PRF–19500 and herein. The device shall be operated under the specified conditions.

Unless otherwise specified, lead-mounted devices should be mounted by the leads with jig mounting clips at least .375 inch (9.5 mm) from the body, or from the lead tabulation, if the lead tubulation projects from the body. Unless otherwise specified, mounting and connections to surface mount devices shall be made only at their terminations. Unless a free-air life test is specified, case mounted device types (e.g., stud, flange, disc) shall be mounted by their normal case surface. The point of connection shall be maintained at a temperature not less than the specified temperature.

After the termination of the test, or in accordance with the period specified in MIL–PRF–19500 and the performance specification sheet, if otherwise defined, the sample units shall be removed from the specified test conditions and allowed to reach standard test conditions. Specified end-point measurements for qualification and quality conformance inspection shall be completed within 96 hours after removal of sample units from the specified test conditions. Additional readings may be taken at the discretion of the manufacturer. If end-point measurements cannot be performed within the specified time, the devices shall be subjected to the same test conditions for a minimum of 24 additional hours before post test measurements are performed.

3. Summary. The following conditions shall be specified in the applicable performance specification sheet or acquisition document:

a. Test type and details; rectifying or forward dc current and V_r for rectifiers and signal diodes, dc power (or current) for zener diodes, power (and range of V_{CE} and V_{DS}) for bipolar and FETs (see 2).

b. Test temperature, if other than room ambient.

c. Test mounting, if other than that specified (see 2).

d. End-point measurements (see 2).

Source: https://assist.dla.mil -- Downloaded: 2016-12-05T07:38Z
Check the source to verify that this is the current version before use.

This page is intentionally left blank.

Source: https://assist.dla.mil -- Downloaded: 2016-12-05T07:38Z
Check the source to verify that this is the current version before use.

METHOD 1027.3

STEADY–STATE OPERATION LIFE (SAMPLE PLAN)

1. Purpose. The purpose of this test method is to determine compliance with the specified sample plan for semiconductor devices subjected to the specified conditions.

2. Procedure. Unless otherwise specified, the device shall be subjected to the steady-state operation test at the temperature specified for 340 hours minimum. The device shall be operated under the specified conditions.

Unless otherwise specified, lead-mounted devices should be mounted by the leads with jig mounting clips at least .375 inch (9.5 mm) from the body or from the lead tubulation if the lead tubulation projects from the body. Unless otherwise specified, mounting and connections to surface mount devices shall be made only at their terminations. Unless free-air life test is specified, case mounted device types (e.g., stud, flange, disc) shall be mounted by their normal case surface. The point of connection shall be maintained at a temperature not less than the specified temperature.

After the termination of the test, or in accordance with the period specified by MIL–PRF–19500 and the performance specification sheet if otherwise defined, the sample units shall be removed from the specified test conditions and allowed to reach standard test conditions. Specified end-point measurements for qualification and quality conformance inspection shall be completed within 96 hours after removal of sample units from the specified test conditions. Additional readings may be taken at the discretion of the manufacturer. If end-point measurements cannot be performed within the specified time, the devices shall be subjected to the same test conditions for a minimum of 24 additional hours before post test measurements are performed.

3. Summary. The following conditions shall be specified in the applicable performance specification sheet or acquisition document:

a. Test type and details; rectifying or forward dc current and V_r for rectifiers and signal diodes, dc power (or current) for zener diodes, power (and range of V_{CE} and V_{DS}) for bipolar and FETs (see 2).

b. Test temperature, if other than room ambient.

c. Test time, if other than 340 hours (see 2).

d. Test mounting, if other than that specified (see 2).

e. End-point measurements (see 2).

Source: https://assist.dla.mil -- Downloaded: 2016-12-05T07:38Z
Check the source to verify that this is the current version before use.

This page is intentionally left blank.

Source: https://assist.dla.mil -- Downloaded: 2016-12-05T07:38Z
Check the source to verify that this is the current version before use.

METHOD 1031.5

HIGH–TEMPERATURE LIFE (NONOPERATING)

1. Purpose. The purpose of this test method is to determined compliance with the specified lambda (λ) for semiconductor devices subjected to the specified conditions.

2. Procedure. The device shall be stored under the specified ambient conditions (normally the maximum temperature) for a time period in accordance with the life test requirements of MIL–PRF–19500. In accordance with the life test period specified by MIL–PRF–19500, the sample units shall be removed from the specified ambient conditions and allowed to reach standard test conditions. Specified end-point measurements for qualification and quality conformance inspection shall be completed within 96 hours after removal of sample units from the specified ambient conditions. If measurements cannot be performed within the specified time, the devices shall be subjected to the same test conditions for a minimum of 24 additional hours before post test measurements are performed. Additional readings may be taken at the discretion of the manufacturer.

2.1 Visual examination. The markings shall be legible after the test. There shall be no evidence (when examined without magnification) of flaking or pitting of the finish or corrosion that will interfere with the mechanical and electrical application of the device.

3. Summary. The following conditions shall be specified in the applicable performance specification sheet or acquisition document:

a. Test conditions (see 2).

b. End-point measurements (see 2).

Source: https://assist.dla.mil -- Downloaded: 2016-12-05T07:38Z
Check the source to verify that this is the current version before use.

This page is intentionally left blank.

Source: https://assist.dla.mil -- Downloaded: 2016-12-05T07:38Z
Check the source to verify that this is the current version before use.

METHOD 1032.2

HIGH–TEMPERATURE (NONOPERATING) LIFE (SAMPLE PLAN)

1. Purpose. The purpose of this test is to determine compliance with the specified sample plan for semiconductor devices subjected to the specified conditions.

2. Procedure. Unless otherwise specified, the device shall be stored under the specified ambient conditions (normally the maximum temperature) 340 hours minimum. The sample units shall be removed from the specified ambient conditions and allowed to reach standard test conditions. Specified end-point measurements for qualification and quality conformance inspection shall be completed within 96 hours after removal of sample units from the specified ambient conditions. If measurements cannot be performed within the specified time, the devices shall be subjected to the same test conditions for a minimum of 24 hours before post test measurements are performed. Additional readings may be taken at the discretion of the manufacturer.

2.1 Visual examination. The markings shall be legible after the test. There shall be no evidence (when examined without magnification) of flaking or pitting of the finish or corrosion that will interfere with the mechanical and electrical application of the device.

3. Summary. The following conditions shall be specified in the applicable performance specification sheet or acquisition document:

a. Test conditions (see 2).

b. Test time, if other than 340 hours (see 2).

c. End point measurements (see 2).

Source: https://assist.dla.mil -- Downloaded: 2016-12-05T07:38Z
Check the source to verify that this is the current version before use.

This page is intentionally left blank.

Source: https://assist.dla.mil -- Downloaded: 2016-12-05T07:38Z
Check the source to verify that this is the current version before use.

METHOD 1033

REVERSE VOLTAGE LEAKAGE STABILITY

1. Purpose. This test method is designed to evaluate the short term leakage stability of semiconductor devices under reverse bias conditioning. It is not intended to replace, nor does it duplicate, the high temperature reverse bias conditioning. The failure mechanisms that are addressed in this test method are not sustained upon the removal of applied bias to the device. As an example; certain semiconductor designs are quite susceptible to unstable reverse leakage due to the presence of hydrogen in the device. This method can be used to ascertain the susceptibility of a technology to this type of a problem or the effectiveness of countermeasures.

2. Procedure.

2.1 Condition A. Apply to the DUT at room temperature, +25°C, a minimum of 80 percent of the specified V_{cb}, V_{ds}, V_r as applicable. Apply bias and measure and record the leakage current.

Retain uninterrupted bias on the device for 1 hour minimum.

After 1 hour minimum re-measure and record the reverse leakage of the device. Interruption of the applied bias for any reason between the pre- and post-leakage measurements invalidates the test. Bias shall not be interrupted to make the reverse leakage measurement.

2.2 Condition B. Sweep the voltage in the BVCEO mode until the breakdown of the device is observed and study the breakdown leakage plot for a minimum of 10 seconds for stability. An unstable plot will be considered any device which exhibits one or more of the following:

a. Collapsing.

b. Leakage increasing.

A device will be considered passing when none of the instability modes are noticed from 2.a and 2.b after a period of approximately 10 seconds. The device will be then subjected to a leakage test.

Sweep the voltage of the device to the maximum leakage identified on the applicable performance specification sheet. Observe the amplitude of the leakage. Leakage is defined as I_{cbo}, I_{ces}, or I_{cex} as specified in the applicable performance specification.

After 30 seconds minimum, the maximum change in leakage allowed is as specified for burn-in in the performance specification.

Perform the breakdown and leakage on the specified number of samples in accordance with the applicable performance specification sheet or acquisition document. One hundred percent must be performed on the entire lot if any device from the sample fails the above tests.

3. Failure criteria. The following shall be used as the pass/fail criteria for condition A:

For measured Ir < 100nA	Delta Ir = 100 nA max.
For measured Ir 100 nA < Ir < 1μA	Delta Ir = 200 nA max.
For measured Ir > 1 μA	Delta Ir = Less than 50 percent of initial measurement.

Source: https://assist.dla.mil -- Downloaded: 2016-12-05T07:38Z
Check the source to verify that this is the current version before use.

This page is intentionally left blank.

Source: https://assist.dla.mil -- Downloaded: 2016-12-05T07:38Z
Check the source to verify that this is the current version before use.

METHOD 1036.3

INTERMITTENT OPERATION LIFE

1. Purpose. The purpose of this test method is to determine compliance with the specified lambda (λ) for semiconductor devices subjected to the specified conditions.

2. Procedure. The device shall be subjected intermittently to the specified operating and nonoperating conditions for the time period in accordance with the life test requirements of MIL–PRF–19500. The "on" and "off" periods shall be initiated by sudden, not gradual, application or removal of the specified operating conditions. Lead-mounted devices should be mounted by the leads with jig mounting clips at least .375 inch (9.5 mm) from the body or lead tubulation, if the lead tubulation projects from the body. The point of connection shall be maintained at a temperature not less than the specified temperature. Within the time interval of 24 hours before to 72 hours after termination of the test, in accordance with the life test period specified by MIL–PRF–19500, the sample units shall be removed from the specified test conditions and allowed to reach standard test conditions. Specified end-point measurements for qualification and quality conformance inspection shall be completed within 96 hours after removal of sample units from the specified test conditions. Additional readings may be taken at the discretion of the manufacturer.

3. Summary. The following conditions shall be specified in the applicable performance specification sheet or acquisition document:

a. Test conditions (see 2).

b. Operating and nonoperating cycles (see 2).

c. Test temperature (case or ambient).

d. Test mounting, if other than that specified (see 2).

e. End point measurements (see 2).

Source: https://assist.dla.mil -- Downloaded: 2016-12-05T07:38Z
Check the source to verify that this is the current version before use.

This page is intentionally left blank.

Source: https://assist.dla.mil -- Downloaded: 2016-12-05T07:38Z
Check the source to verify that this is the current version before use.

METHOD 1037.3

INTERMITTENT OPERATION LIFE (SAMPLE PLAN)

1. Purpose. The purpose of this test is to determine compliance with the specified numbers of cycles for semiconductor devices subjected to the specified conditions. It accelerates the stresses on all bonds and interfaces between the chip and mounting face of devices subjected to repeated turn on and off of equipment and is therefore most appropriate for case mount style (e.g., stud, flange, and disc) devices.

2. Mounting. Clips or fixtures appropriate for holding the device terminations and reliably conducting the heating current shall be used. This method is intended to allow the case temperature to rise and fall appreciably as the junction is heated and cooled; thus it is not appropriate to use a large heat sink. Lead-mounted devices, when specified, should be mounted by the leads with jig mounting clips at least .375 inch (9.53 mm) from the body, or from the lead tubulation if it projects from the body.

3. Procedure. All specimens shall be subjected to the specified number of cycles. When stabilized after initial warm-up cycles, a cycle shall consist of an "on" period, when power is applied suddenly, not gradually, to the device for the time necessary to achieve a delta case temperature of +85°C minimum or a delta junction temperature of +100°C (+60°C for thyristors) minimum (not to exceed the maximum rated junction temperature of the device), followed by an off period, when the power is suddenly removed, for cooling the case through a similar delta temperature. Auxiliary (forced) cooling is permitted during the off period only.

DC current shall be used for the power required during the "on" period except, for rectifiers and thyristors, equivalent half sine wave (or full sine wave for triacs) is permissible. The test power, or current, shall be at least the free air rating. For disc types, where functional mounting requires heat sinking, it shall be at least 25 percent of the continuous, case referenced, rating. The on time (leaded and axial leaded devices) shall be at least 30 seconds. Unless otherwise specified, for TO–3, DO–5, and larger devices it shall be at least one minute. Specified end-point measurements for qualification and conformance inspection shall be completed within 96 hours after removal of sample units from the specified test conditions. Additional readings may be taken at the discretion of the manufacturer. If measurements cannot be performed within the specified time, the devices shall be subjected to the same test conditions for a minimum of 200 additional cycles before post test measurements are performed.

4. Summary. The following conditions shall be specified in the applicable performance specification sheet or acquisition document:

a. Test conditions (power or current, see 3).

b. Number of operating cycles (see 3), if other than 2,000.

c. Test mounting, if other than that specified (see 2).

d. End-point measurements (see 3).

NOTE: Heat sinks are not intended to be used in this test, however, small heat sinks may be used when it is otherwise difficult to control temperature of specimens, such as with small package types (e.g., TO–39).

Source: https://assist.dla.mil -- Downloaded: 2016-12-05T07:38Z
Check the source to verify that this is the current version before use.

This page is intentionally left blank.

Source: https://assist.dla.mil -- Downloaded: 2016-12-05T07:38Z
Check the source to verify that this is the current version before use.

METHOD 1038.5

BURN–IN (FOR DIODES, RECTIFIERS, AND ZENERS)

1. Purpose. This test is performed to eliminate marginal semiconductor devices or those with defects resulting from manufacturing aberrations that are evidenced as time and stress dependent failures. Without the burn-in, these defective devices would be expected to result in early lifetime failures under normal use conditions. It is the intent of this test to operate the semiconductor device at specified conditions to reveal electrical failure modes that are time and stress dependent.

a. HTRB screens for mobile ionic contaminants within the device's passivation layers. It is equally effective on most device types including diodes, rectifiers, zeners, and transient voltage suppressors.

b. SSOP, when properly specified, simulates actual device operation but with accelerated conditions. It is effective on some device types including diodes, rectifiers, and zeners.

2. Mounting. Unless otherwise specified in the performance specification sheet, mounting shall be in accordance with the following.

2.1 Test condition A – HTRB. The method of mounting is usually optional for high temperature bias since little power is dissipated in the device. (Devices with normally high reverse leakage current may be mounted to heat sinks to prevent thermal run-away conditions.)

2.2 Test condition B – SSOP.

a. Devices with leads projecting from the body (e.g., axial) shall be mounted by their leads at least .375 inch (9.53 mm) from the body or lead tabulation.

b. Unless otherwise specified, devices designed for case mounting (e.g., stud, flange, and disc) shall be mounted by the stud or case according to the design specifications for the package. Care must be exercised to avoid stressing or warping of the package. Thermally conductive compounds may optionally be used provided that they are removed afterwards and do not leave a residue on the package.

c. Surface mount types shall be held by their electrical terminations.

3. Procedure. The device shall be subjected to the burn-in at the temperature and for the time specified herein or on the performance specification sheet. Pre-burn-in measurements shall be made as specified. The failure criteria shall be as specified in the appropriate performance specification sheet. If measurements cannot be performed within the specified time, the devices shall be subjected to the same test conditions for a minimum of 24 additional hours before test measurements are performed.

Source: https://assist.dla.mil -- Downloaded: 2016-12-05T07:38Z
Check the source to verify that this is the current version before use.

3.1 Test condition A – HTRB. Unless otherwise specified, HTRB is performed with the cathode positively biased at an artificially elevated temperature for 48 hours minimum. These conditions apply to both rectifiers and to avalanche and zener voltage regulators.

a. The junctions of rectifiers shall be reverse biased at 50 to 80 percent in accordance with figure 1038–1 of their rated working peak reverse voltage; avalanche and zener voltage regulators, when specified, shall be reverse biased at 80 percent of their minimum avalanche or zener voltages except when voltage exceeds 2,500. The reverse bias shall be a dc bias with less than 20 percent ripple except where rectified (pulsating) dc is permitted. The ambient or case test temperature shall be as specified (normally +150°C for silicon devices) (see figure 1038–1).

b. At the end of the high-temperature test time, as specified, the ambient temperature shall be lowered. The test voltage shall be maintained on the devices until a case temperature of +30°C ±5°C is attained. Testing shall be completed within 24 hours after the removal of voltage. After removal of the bias voltage, no other voltage shall be applied to the device before taking the post HTRB reverse current measurement. Post HTRB measurements shall be taken as specified.

Uni-directional transient voltage suppressors shall be treated as avalanche and zener voltage regulators for the purposes of conducting HTRB.

Bi-directional transient voltage suppressors shall be treated as two discrete avalanche or zener voltage regulators (when specified) with each polarity taking turns receiving HTRB and post HTRB testing. Post HTRB testing of one polarity must be completed before reversing the device and commencing HTRB with opposite polarity bias voltage. The second polarity may be achieved either electrically or by mechanically reversing the devices.

3.2 Test condition B – SSOP. Unless otherwise specified, the devices shall be subjected to the maximum rated test conditions for a minimum of 96 hours. The test temperature shall be as specified. Unless otherwise specified, post burn-in readings shall be taken within 96 hours. If ambient temperature is specified, it shall comply with the general requirements for HTRB or burn-in of the general test method standard (see 4.5 of MIL–STD–750). The following indicates the test conditions to be specified for each of the three types of power burn-in tests:

a. Rectifying test. Unless otherwise specified, average rectified current, peak reverse voltage, frequency, and temperature (case, junction, or ambient) are as specified in the performance specification sheet.

b. Forward bias test. Unless otherwise specified, forward current and temperature (case or junction) are as specified in the performance specification sheet.

c. Voltage regulator (zener) test. Unless otherwise specified, voltage regulator diode current and temperature (case or junction) are as specified in the performance specification sheet. At the end of the test time, the power level shall be reduced to five percent of the operating level. If the ambient is artificially elevated, it shall also be reduced to room temperature. The object is to let the devices cool down under bias. When the junction or case temperature has stabilized to below +50°C, the bias may be removed and the devices tested within 96 hours after removal of reverse bias. No other voltage may be applied to the devices until completion of electrical test.

Source: https://assist.dla.mil -- Downloaded: 2016-12-05T07:38Z
Check the source to verify that this is the current version before use.

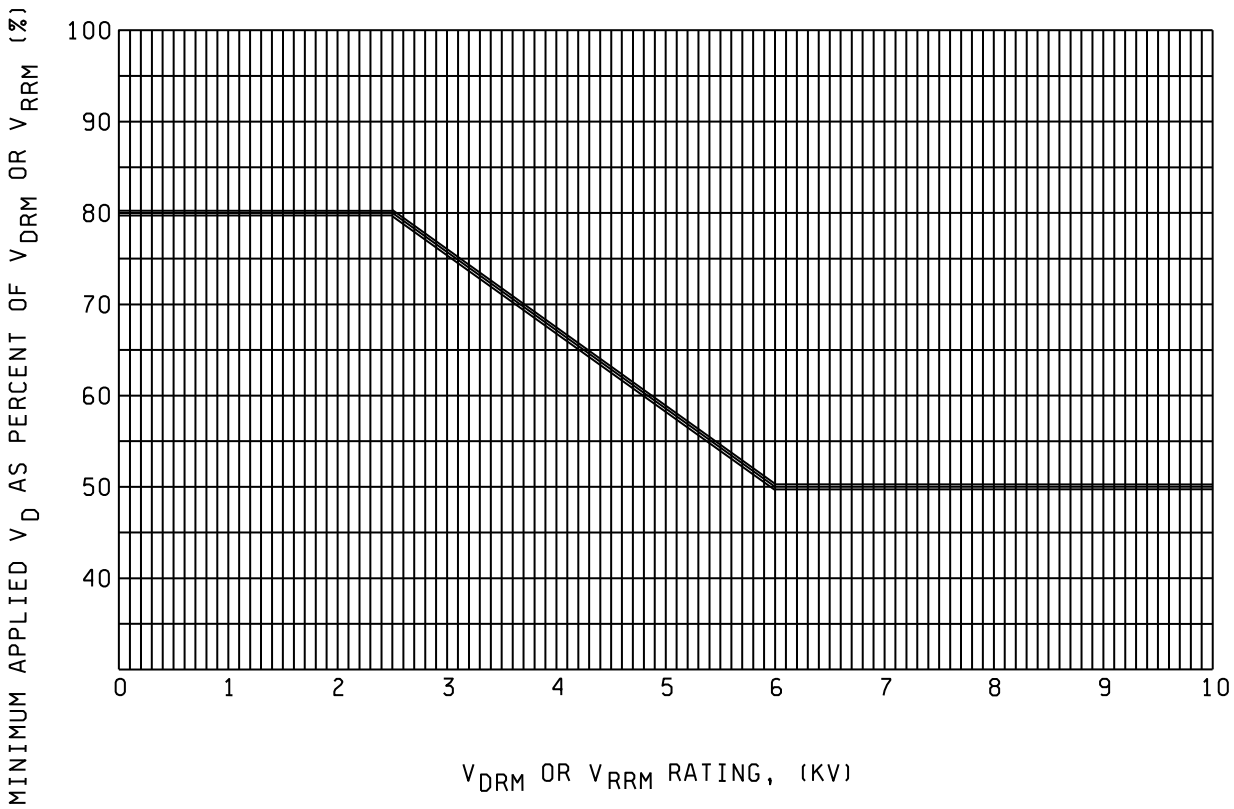

FIGURE 1038–1. Voltage requirement.

4. Summary. The test condition letter and the following details shall be specified in the applicable performance specification sheet or acquisition document:

a. Test condition A:

(1) Test temperature (see 3.1).

(2) Test conditions (see 2.1 and 3.1).

(3) Test time (see 3.1).

(4) Preburn-in and post burn-in measurements (see 3 and 3.1).

(5) Time for completion of post burn-in measurements, if other than 24 hours (see 3.1).

(6) Criteria for failure (see 3).

Source: https://assist.dla.mil -- Downloaded: 2016-12-05T07:38Z
Check the source to verify that this is the current version before use.

b. Test condition B:

(1) Test temperature (see 3.2).

(2) Test conditions (see 2.2 and 3.2).

(3) Burn-in time if other than 96 hours (see 3.2).

(4) Pre-burn-in and post burn-in measurements (see 3. and 3.2).

(5) Time for completion of post burn-in measurements, if other than 96 hours (see 3.2).

(6) Criteria for failure (see 3).

Source: https://assist.dla.mil -- Downloaded: 2016-12-05T07:38Z
Check the source to verify that this is the current version before use.

METHOD 1039.4

BURN-IN (FOR TRANSISTORS)

1. Purpose. This test is performed to eliminate marginal semiconductor devices or those with defects resulting from manufacturing aberrations that are evidenced as time and stress dependent failures. Without the burn-in, these defective devices would be expected to result in early lifetime failures under normal use conditions. It is the intent of this test to operate the semiconductor device at specified conditions to reveal electrical failure modes that are time and stress dependent.

2. Procedure. The semiconductor device shall be subjected to the burn-in at the temperature and for the time specified herein. Preburn-in measurements shall be made as applicable. The failure criteria shall be as specified.

2.1 Mounting. Devices with leads projecting from the body shall be mounted by their leads at least .250 inch (6.35 mm) from the seating plane. Unless otherwise specified, devices with studs or case shall be mounted by the stud or case.

2.1.1 Test condition A – steady-state reverse bias. The transistor primary blocking junction, as specified, shall be reverse biased for 48 hours minimum, except PNP bipolar transistors shall be 24 hours, at the ambient temperature specified (normally +150°C) and at 80 percent of its maximum rated collector-base voltage. For bipolar transistors, the V_{CB} base is not to exceed the maximum collector-emitter voltage rating. For field-effect (signal or low power) transistors, the gate to source voltage, with drain to source shorted, shall be as specified. At the end of the high-temperature test time, specified herein, the ambient temperature shall be lowered. The test voltage shall be maintained on the devices until T_C = +30°C ±5°C is attained. After room ambient temperature has been established, the bias voltage shall be removed. After removal of the bias voltage, no other voltage shall be applied to the device before taking the post burn-in reverse-current measurement(s). Unless otherwise specified, after burn-in voltage is removed, post burn-in measurements shall be completed within 24 hours. If measurements cannot be performed within the specified time, the devices shall be subjected to the same test conditions for a minimum of 24 additional hours before post test measurements are performed.

2.1.2 Test condition B – steady-state power. All devices shall be operated at the maximum rated power related to the test temperature for 160 hours minimum at the specified test conditions (excluding microwave).

a. For bipolar transistors, the temperature and power shall be specified. Unless otherwise specified, the temperature shall be as follows:

   T_A = room ambient as defined in, 4.5 of MIL–STD–750 for small signal, switching, and medium power devices intended for printed board mounting; T_J = maximum rated temperature, +0°C, -25°C, for devices intended for chassis or heat sink mounting. Case temperature burn-in at maximum ratings (typically T_C = +100°C) may be substituted on the chassis or heat sink mounted devices at the device manufacturer's option. If the voltage conditions specified herein cause the SOA rating to be exceeded, then the voltage shall be decreased until the SOA rating is met while maintaining the full rated power condition. For microwave bipolar transistors, the temperature, voltage, and current shall be as specified in the detail performance specification sheet.

b. For unijunction and field-effect (signal and low power) transistors, the temperature, voltage, and current shall be as specified.

c. Post burn-in measurements shall be as specified.

d. Unless otherwise specified, post burn-in readings shall be taken within 96 hours. If measurements cannot be performed within the specified time, the devices shall be subjected to the same test conditions for a minimum of 24 additional hours before post test measurements are performed.

Source: https://assist.dla.mil -- Downloaded: 2016-12-05T07:38Z
Check the source to verify that this is the current version before use.

3. Summary. The test condition letter and the following conditions shall be specified in the applicable performance specification sheet or acquisition document:

a. Test condition A:

(1) Junction to be reverse biased (see 2.1.1).

(2) Gate to source voltage for FETs (see 2.1.1).

(3) Test temperature (see 2.1.1).

(4) Test time for FETs (see 2.1.1).

(5) Voltage for post burn-in reverse current measurement (see 2.1.1).

(6) Time for completion of post burn-in measurements, if other than 24 hours (see 2.1.1).

(7) Criteria for failure (see 2).

b. Test condition B:

(1) Test temperature, if other than as specified in 2.1.2.

(2) Test conditions (see 2.1.2).

(3) Power for bipolar transistors (see 2.1.2).

(4) Voltage and current for unijunction and FETs (see 2.1.2).

(5) Preburn-in and post burn-in measurements (see 2.1.2).

(6) Time for completion of post burn-in measurements, if other than as specified in 2.1.2.

(7) Criteria for failure (see 2).

Source: https://assist.dla.mil -- Downloaded: 2016-12-05T07:38Z
Check the source to verify that this is the current version before use.

METHOD 1040

BURN-IN (FOR THYRISTORS (CONTROLLED RECTIFIERS))

1. Purpose. The purpose of this test method is to eliminate marginal or defective semiconductor devices by operating them at specified screening conditions which reveal electrical failure modes that are time and stress dependent. In the absence of burn-in, these defective devices would be expected to result in early lifetime failures under normal use conditions.

2. Procedure. Lead mounted devices shall be mounted by the leads at least .375 inch (9.5 mm) from the body or lead tubulation, if the lead tubulation projects from the body. Unless otherwise specified, stud or case mounted devices shall be mounted by the stud or case respectively. The devices shall then be subjected to the burn-in screen(s) at the temperature and for the time specified. Pre burn-in and postburn-in measurements shall be made as specified.

2.1 Test condition A – ac blocking voltage. The rated peak reverse and the rated peak forward blocking voltage shall be alternately applied, each in the form of a 60 Hz half wave sinusoidal pulse using the circuit of figure 1040–1. The test temperature shall be as specified. At the end of the specified high temperature test time, the ambient temperature shall be lowered. The test voltage shall be maintained on the devices until T_C = +30°C ±5°C is attained. After bias is removed and prior to post-test measurements, the devices shall be maintained at room ambient temperature and no voltage shall be applied prior to that voltage specified for the post-test measurements. The post-test end-points shall be completed within the specified time after the bias voltage is removed. Any device which switches from the off-state to the on-state as indicated by a blown fuse shall be removed from the lot.

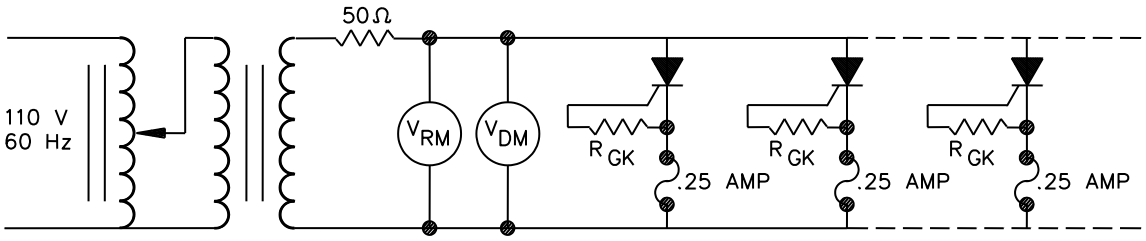

FIGURE 1040–1. AC blocking voltage circuit.

2.2 Test condition B – dc forward blocking voltage. The rated dc forward blocking voltage shall be applied as indicated in the circuit on figure 1040–2. The test temperature shall be as specified. At the end of the specified high-temperature test time, the ambient temperature shall be lowered. The test voltage shall be maintained on the devices until T_C = +30°C ±5°C is attained. After bias is removed and prior to post test measurements, the devices shall be maintained at room ambient temperature and no voltage shall be applied prior to that voltage specified for the post test measurements. The post test end points shall be completed within the specified time after the bias voltage is removed. Any device which switches from the off-state to the on-state as indicated by a blown fuse shall be removed from the lot.

Source: https://assist.dla.mil -- Downloaded: 2016-12-05T07:38Z
Check the source to verify that this is the current version before use.

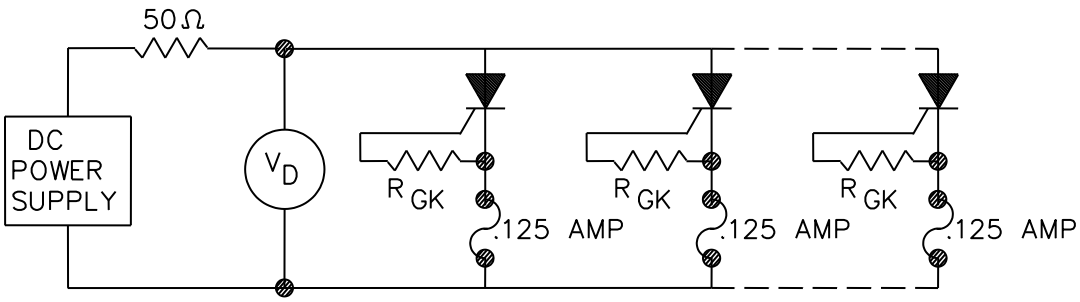

FIGURE 1040–2. DC forward blocking voltage circuit.

3. Measurements. Initial readings shall be taken prior to burn-in. Post-test readings shall be taken within 96 hours.

4. Summary. The test condition letter and the following conditions shall be specified in the applicable performance specification sheet or acquisition document:

a. Test condition A:

(1) Peak forward and reverse blocking voltage (see 2.1).

(2) Test temperature (see 2.1).

(3) Duration of burn-in (see 2.1).

(4) R_{GK} (see figure 1040–1).

(5) Preburn-in and postburn-in measurements (see 3).

b. Test condition B:

(1) DC forward blocking voltage (see 2.2).

(2) Test temperature (see 2.2).

(3) Duration of burn-in (see 2.2).

(4) R_{GK} (see figure 1040–2).

(5) Preburn-in and postburn-in measurements (see 3).

Source: https://assist.dla.mil -- Downloaded: 2016-12-05T07:38Z
Check the source to verify that this is the current version before use.

METHOD 1041.3

SALT ATMOSPHERE (CORROSION)

1. Purpose. This test method is an accelerated laboratory corrosion test simulating the effects of seacoast atmospheres on semiconductor devices.

2. Apparatus. Apparatus used in the salt-atmosphere test shall include the following:

   a. Exposure chamber with racks for supporting devices.

   b. Salt-solution reservoir.

   c. Means for atomizing the salt solution, including suitable nozzles and compressed-air supply.

   d. Chamber-heating means and controls.

   e. Means for humidifying the air at a temperature above the chamber temperature.

3. Procedure. The device shall be placed within the test chamber. Unless otherwise specified, a salt atmosphere fog having a temperature of +35°C shall be passed through the chamber for a period of 24 +2, –0 hours. The fog concentration and velocity shall be adjusted so that the rate of salt deposit in the test area is between 10 and 50 g/m^2 per day.

4. Examinations. Unless otherwise specified, upon completion of the test, and to aid in the examinations, devices shall be prepared in the following manner: Salt deposits shall be removed by a gentle wash or dip in running water not warmer than +37°C and a light brushing, using a soft–hair brush or plastic bristle brush. A device with illegible markings, leads missing, broken, or partially separated, evidence (when examined with 10X magnification) of flaking or pitting of the finish or corrosion exceeding five percent of the package area or five percent of the lead shall be considered a failure. Discoloration of the plating or lead finish shall not be considered a failure. The marking legibility requirement shall not apply to characters with a height of less than .030 inches (0.76 mm).

5. Summary. The following conditions shall be specified in the applicable performance specification sheet or acquisition document:

   a. Time of exposure, if other than that specified (see 3).

   b. Measurements and examinations after test (see 4).

Source: https://assist.dla.mil -- Downloaded: 2016-12-05T07:38Z
Check the source to verify that this is the current version before use.

This page is intentionally left blank.

Source: https://assist.dla.mil -- Downloaded: 2016-12-05T07:38Z
Check the source to verify that this is the current version before use.

METHOD 1042.4

BURN-IN AND LIFE TEST FOR POWER MOSFETs OR INSULATED GATE BIPOLAR TRANSISTORS (IGBT)

1. Purpose. Test conditions A, B, and C are performed to eliminate marginal semiconductor devices or those with defects resulting from manufacturing aberrations that are evidenced as time and stress failures under normal use conditions. Test condition D is performed to eliminate marginal lots with manufacturing defects. For the IGBT, replace the drain and source MOSFET designations with collector and emitter IGBT designations, D = C and S = E.

2. Procedure. The semiconductor device shall be subjected to the burn-in at the temperature and for the time specified herein. Preburn-in measurements shall be made as applicable. The failure criteria shall be as specified.

2.1 Test condition A – steady-state reverse bias. All devices shall be operated at 80 percent of the maximum rated drain to source voltage at the specified test temperature for 160 hours minimum, at the specified test conditions. The drain to source voltage, with gate to source shorted, shall be as specified. At the end of the high-temperature test time, specified herein, the ambient temperature shall be lowered. The burn-in voltage shall be maintained on the devices until T_C = 30°C ±5°C is attained. The interruption of bias for up to one minute for the purpose of moving devices to cool down positions separate from the chamber, within which life testing was performed, shall not be considered removal of bias.

After removal of the burn-in voltage, no other voltage shall be applied to the device before taking the post burn-in reverse current measurement(s). After burn-in voltage is removed, post burn-in measurements shall be completed within 96 hours, unless otherwise specified. (See figure 1042–1.) Unless otherwise specified, the burn-in temperature shall be T_A = 150°C. The V_{DS} burn-in voltage shall be as follows. For IGBT devices, burn-in temperature shall be T_J = 150°C, –15°C to +0°C, and test time shall be 96 hours minimum.

If $V_{(BR)DSS}$ is	V_{DS} shall be
20 V	16 V
30 V	24 V
40 V	32 V
60 V	48 V
80 V	64 V
90 V	72 V
100 V	80 V
120 V	96 V
150 V	120 V
170 V	136 V
200 V	160 V
240 V	192 V
350 V	280 V
400 V	320 V
450 V	360 V
500 V	400 V
600 V	480 V

$V_{(BR)DSS}$ voltages in between shall revert to the next lower V_{DS} burn-in voltage.

Source: https://assist.dla.mil -- Downloaded: 2016-12-05T07:38Z
Check the source to verify that this is the current version before use.

2.1.1 Temperature accelerated test details. In an accelerated test, devices are subjected to bias conditions at a temperature exceeding the maximum rated junction temperature. The maximum ambient temperature for MOSFETs is +175°C for a minimum of 48 hours. It is recommended that an adequate sample of devices be exposed to the high temperature while measuring the voltage(s) and current(s) of the devices to assure that the applied stresses do not induce damaging overstress. An adequate sample which has completed the accelerated test should also be subjected to a 1,000 hour steady-state reverse bias at standard test conditions to assure the devices have not been deleteriously affected. Details of the accelerated test will be found in the performance and or general specification.

2.2 Test condition B – steady-state gate bias. All devices shall be operated at 80 percent of the maximum rated gate to source voltage at the specified temperature for a minimum of 48 hours. (See figure 1042–2.) For MOSFET power transistors, the temperature and voltage shall be as specified. Unless otherwise specified, the temperature (T_A) shall be +150°C.

If maximum rated V_{GS} is	10 V	Burn-in voltage (V_{GS}) shall be	8 V
	15 V		12 V
	20 V		16 V
	30 V		24 V
	40 V		32 V

V_{GS} voltages in between shall revert to the next lower voltage.

2.3 Test condition C – steady-state power. All devices shall be operated at the maximum junction temperature –0°C, +24°C by means of applying power to the device while maintaining an ambient temperature of +25°C +10°C, –5°C. The junction temperature shall be verified by means of measuring junction temperature using the change in body diode voltage drop or calculated by applying the following equations:

$T_J = R_{\Theta JA} \times P_D + T_A$ No heat sink used

or

$T_J = R_{\Theta JC} \times P_D + T_C$ Heat sink used

T_C = Temperature of case

T_A = Ambient air temperature

T_S = Temperature of heat sink

$P_D = V_{DS} \times I_D$

V_{DS} = Drain-source voltage

I_D = Drain-source current

NOTE: The power indicated by the safe operating curve shall not be exceeded.

Source: https://assist.dla.mil -- Downloaded: 2016-12-05T07:38Z
Check the source to verify that this is the current version before use.

2.4 Test condition D – intermittent power. 1/ All devices shall be subjected to the number of cycles as specified. When stabilized after initial warm-up cycles, a cycle shall consist of suddenly applying power to the device for the time necessary to achieve a +100°C minimum rise in junction temperature or a delta case temperature of +85°C minimum (not to exceed the maximum rated junction temperature of the device) followed by an off period for the time necessary for the junction to cool. Forced air cooling is permitted during the off period only.

Suppliers shall characterize each device design and demonstrate a direct correlation between the required delta T_J (+100°C) and the T_C (case temperature) used during test. The rise in junction temperature during the on period shall be verified by means of measuring junction temperature using the change in body diode voltage drop or calculated by applying the following equation.

ΔT_J = $P_T R_{\Theta JC} (1 - \text{Exp} - t/T_p)$, where $P_T = V_{DS} I_D$

T_P = thermal time constant of device package, and the heat sink used.

t = heating time, $R_{\Theta JC}$ = thermal resistance junction to case, for the period of heating time specified, of the device and any necessary heat sink used.

This test is intended to allow the case temperature to rise and fall appreciably as the junction is heated and cooled; thus, it is not appropriate to use a large heat sink or a high power short pulse.

1/ This test condition is destructive.

3. Summary. Test condition letter and the following details shall be specified in the individual performance specification.

a. Test condition A:

(1) Drain to source voltage for MOSFET power field-effect transistors (V_{DS}) (see 2.1).

(2) Test temperature, if other than specified (see 2.1).

(3) Test time, if other than specified (see 2.1).

(4) Voltage for post burn-in reverse current measurement (see 2.1).

(5) Criteria for failure.

b. Test condition B:

(1) Test temperature, if other than as specified (see 2.2).

(2) Test conditions (see 2.2).

(3) Voltage for MOSFET power field-effect transistors (see 2.2).

(4) Preburn-in and post burn-in measurements.

(5) Criteria for failure.

Source: https://assist.dla.mil -- Downloaded: 2016-12-05T07:38Z
Check the source to verify that this is the current version before use.

c. Test condition C:

(1) Ambient temperature and thermal resistance (see 2.3).

(2) Voltage and current, if other than specified (see 2.3).

(3) Preburn-in and postburn-in measurements.

(4) Total test time (see 2.3).

(5) Criteria for failure.

d. Test condition D:

(1) Ambient temperature (if one is desired) and thermal resistance (see 2.4).

(2) Voltage and current, if other than specified (see 2.4).

(3) Pretest and post test measurements.

(4) Number of cycles (see 2.4).

(5) Criteria for failure.

(6) Minimum heating time.

Source: https://assist.dla.mil -- Downloaded: 2016-12-05T07:38Z
Check the source to verify that this is the current version before use.

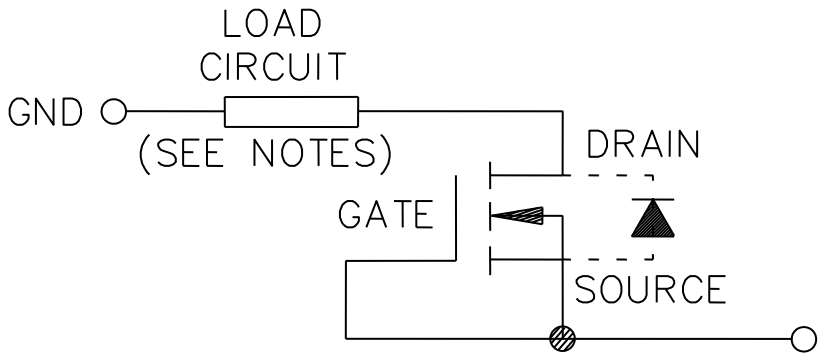

NOTES:

1. The load circuit shall be selected or designed to ensure that the voltage across the load circuit of each acceptable device shall not exceed 10 percent of the specified test voltage. The load circuit may be a resistor, fuse, or circuit which:
   a. Protects the power supply.
   b. Isolates the defective devices from the other devices under test.
   c. Insures a minimum of 98 percent of the specified test voltage is applied across the DUT.
2. If the circuit does not maintain bias on a failed device, then means must be provided to identify that device.

FIGURE 1042–1. High temperature reverse bias test circuit.

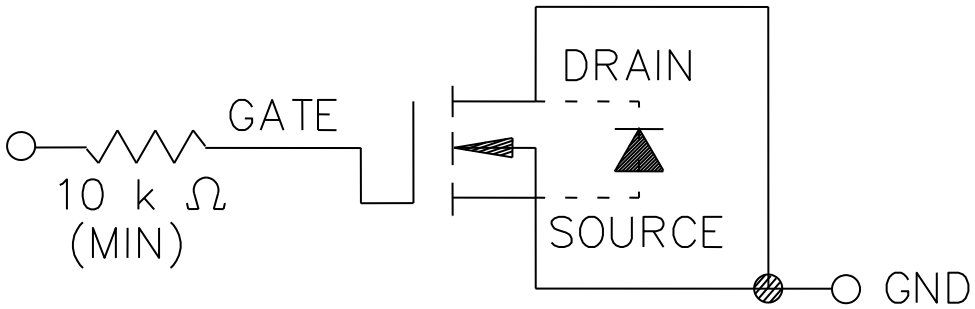

FIGURE 1042–2. High temperature gate bias circuit.

Source: https://assist.dla.mil -- Downloaded: 2016-12-05T07:38Z
Check the source to verify that this is the current version before use.

This page is intentionally left blank.

Source: https://assist.dla.mil -- Downloaded: 2016-12-05T07:38Z
Check the source to verify that this is the current version before use.

METHOD 1046.3

SALT SPRAY (CORROSION)

1. Purpose. This test method is proposed as an accelerated laboratory corrosion test simulating the effects of seacoast atmosphere on semiconductor devices. This test method can also be used to detect the presence of free iron contaminating the surface of another metal, by inspection of the corrosion products.

2. Apparatus. Apparatus used in the salt-spray test shall include the following:

a. Exposure chamber with racks for supporting the test devices.

b. Salt-solution reservoir with means for monitoring an adequate level of solution.

c. Means for atomizing the salt solution, including suitable nozzles and compressed-air supply.

d. Chamber-heating means and control.

e. Means for humidifying the air at a temperature above the chamber temperature.

2.1 Chamber. The chamber and all accessories shall be made of material which will not affect the corrosiveness of the fog, such as glass, hard rubber, or plastic. Wood or plywood shall not be used since they are resiniferous. Materials shall not be used if they contain formaldehyde or phenol in their composition. In addition, all parts which come in contact with test devices shall be of materials that will not cause electrolytic corrosion. The chamber and accessories shall be so constructed and arranged that there is no direct impinging of the spray or dripping of the condensate on the test devices, so that the spray circulates freely about all test devices to the same degree, and so that no liquid which has come in contact with the test devices returns to the salt-solution reservoir. The chamber shall be properly vented to prevent pressure build up and allow uniform distribution of salt spray. The discharge end of the vent shall be protected from strong drafts which can cause strong air current in the chamber.

2.2 Atomizers. The atomizer of atomizers used shall be of such design and construction as to produce a finely divided, wet dense fog. The atomizing nozzle shall be made of material which does not react with the salt solution.

2.3 Air supply. The compressed air entering the atomizers shall be free from all impurities such as oil and dirt. Means shall be provided to humidify and warm the compressed air as required to meet the operating conditions. The air pressure shall be suitable to produce a finely divided dense fog with the atomizer or atomizers used. To insure against clogging the atomizers by salt deposition, the air should have a relative humidity of 95 to 98 percent at the point of release from the nozzle. A satisfactory method is to pass the air in very fine bubbles through a tower containing heated water. The temperature of the water shall be +35°C or higher. The permissible temperature is increased with increasing volume of air and with decreasing heat insulation of the chamber and temperature of its surroundings. It shall not exceed a value above which an excess of moisture is introduced into the chamber (for example, +43.3°C at an air pressure of 12 pounds per square inch (83 kPa), or a value which makes it impossible to meet the requirement for operating temperature.

2.4 Salt solution. The salt solution concentration shall be 5 percent by weight. The salt used shall be sodium chloride containing on the dry basis of more than 0.1 percent of sodium iodide, and not more than 0.5 percent of total impurities. The 5 percent solution shall be prepared by dissolving 5 ±1 parts by weight of salt in 95 parts by weight of distilled or other water. Distilled or other water used in the preparation of solutions shall contain no~~r~~ more than 200 parts per million of total solids. The solution shall be kept free from solids by filtration using a filter similar to that shown on figure 1046–1, and located in the salt solution reservoir in a manner such as that illustrated on figure 1046–2. The solution shall be adjusted to, and maintained at, a specific gravity in accordance with figure 1046–3. The pH shall be maintained between 6.5 and 7.2 when measured at temperature between +33.9°C and +36.1°C. Only dilute chemically pure (cp) grade hydrochloric acid or sodium hydroxide shall be used to adjust the pH. The pH measurement shall be made electrometrically using a glass electrode with a saturated potassium-chloride bridge or by a colorimetric method such as bromothymol blue, provided the results are equivalent to those obtained with the electrometric method.

Source: https://assist.dla.mil -- Downloaded: 2016-12-05T07:38Z
Check the source to verify that this is the current version before use.

2.5 Filter. A filter fabricated of noncorrosive materials similar to that shown on figure 1046–1 shall be provided in the supply line and immersed in the reservoir in a manner such as shown on figure 1046–2.

2.6 Preparation of specimens. Test devices shall be given a minimum of handling, particularly on the significant surfaces, and shall be prepared for test immediately before exposure. Unless otherwise specified, uncoated metallic or metallic-coated test devices shall be thoroughly cleaned of oil, dirt, and grease as necessary until the surface is free from water break. The cleaning methods shall not include the use of corrosive solvents nor solvents which deposit wither corrosive or protective films, nor the use of abrasives other than a paste of pure magnesium oxide. Test devices having an organic coating shall not be solvent cleaned. Those portions of test devices which comes in contact with the support and, unless otherwise specified in the case of coated test devices or samples, cut edges and surfaces not required to be coated, shall be protected with a suitable coating of wax or similar substance impervious to moisture.

3. Procedure. The following exceptions shall apply:

a. At the conclusion of the test, the device will be dried for 24 hours at +40°C ±5°C before the examination. A test device with illegible marking, evidence (when examined without magnification) of flaking or pitting of the finish, or corrosion that will interfere with the application of the device shall be considered a failure.

b. Unless otherwise specified, salt solution shall be 20 percent by weight.

3.1 Location of specimens. Unless otherwise specified, flat test devices and, where practicable, other test devices shall be supported in such a position that the significant surface is approximately 15 degrees from the vertical and parallel to the principal direction of horizontal flow of the fog through the chamber. Other test devices shall be positioned so as to ensure most uniform exposure. Whenever practicable, the test devices shall be supported from the bottom or from the side. When test devices are suspended from the top, suspension shall be by means of glass or plastic hooks or wax string; if plastic hooks are used, they shall be fabricated of material which is nonreactive to the salt solution such as Lucite. The use of metal hooks is not permitted. Test devices shall be positioned so that they do not contact each other, so that they do not shield each other from the freely settling fog, and so that corrosion products and condensate from one test device do not fall upon another.

3.2 Operating conditions.

3.2.1 Temperature. The test shall be conducted with a temperature in the exposure zone maintained at +35°C +1.1°C, –1.7°C. Satisfactory methods for controlling the temperature accurately are by housing the apparatus in a properly controlled constant-temperature room, by thoroughly insulating the apparatus and preheating the air to the proper temperature prior to atomization, and by jacketing the apparatus and controlling the temperature of the water or of the air used. The use of immersion heaters for the purpose of maintaining the temperature within the chamber is prohibited.

Source: https://assist.dla.mil -- Downloaded: 2016-12-05T07:38Z
Check the source to verify that this is the current version before use.

3.2.2 Atomization. The conditions maintained in all parts of the exposure zone shall be such that a suitable receptacle placed at any point in the exposure zone will collect from 0.5 to 3.0 milliliters of solution per hour for each 80 square centimeters of horizontal collecting area (10 centimeters diameter) based on an average run of at least 16 hours. The 5-percent solution thus collected shall have a sodium-chloride content of from 4 to 6 percent (specific gravity) in accordance with figure 1046–3 when measured at a temperature between +33.9°C and +36.1°C. At least two clean fog-collecting receptacles shall be used, one placed near any nozzle and one placed as far as possible from all nozzles. Receptacles shall be fastened so that they are not shielded by test devices and so that no drops of solution from test devices or other sources will be collected. The specific gravity and quantity of the solution collected shall be checked following each salt-spay test. Suitable atomization has been obtained in boxes having a volume of less than 12 cubic feet (0.34 cubic meters) with the following conditions:

a. Nozzle pressure of from 12 to 18 pounds per square inch (83 to 124 kPA).

b. Orifices of from .02 to .03 inch in (0.508 to 0.762 mm) diameter.

c. Atomization of approximately 3 quarts (2.84 Liters) of the salt solution per 10 cubic feet (0.283 cubic meters) of box volume per 24 hours.

When using large-size boxes having a volume considerably in excess of 12 cubic feet (0.34 cubic meters), the above conditions may have to be modified in order to meet the requirements for operating conditions.

3.3 Length of test. The length of the salt-spray test shall be that indicated in one of the following test conditions, as specified:

Test condition		Length of test
A	- - - - - - - -	96 hours
B	- - - - - - - -	48 hours

Unless otherwise specified, the test shall be run continuously for the time indicated or until definite indication of failure is observed, with no interruption except for adjustment of the apparatus and inspection of the test device.

4. Measurements. At the completion of the exposure period, measurements shall be made as specified. To aid in examination, test devices shall be prepared in the following manner, unless otherwise specified: Salt deposits shall be removed by a gentle wash or dip in running water not warmer than +37.8°C and a light brushing, using a soft-hair brush or plastic-bristle brush.

5. Summary. The following details are to be specified in the applicable performance specification sheet or acquisition document:

a. Special mounting and details, if applicable (see 3.3).

b. Test condition letter (see 3.3).

c. Measurements after exposure (see 4).

Source: https://assist.dla.mil -- Downloaded: 2016-12-05T07:38Z
Check the source to verify that this is the current version before use.

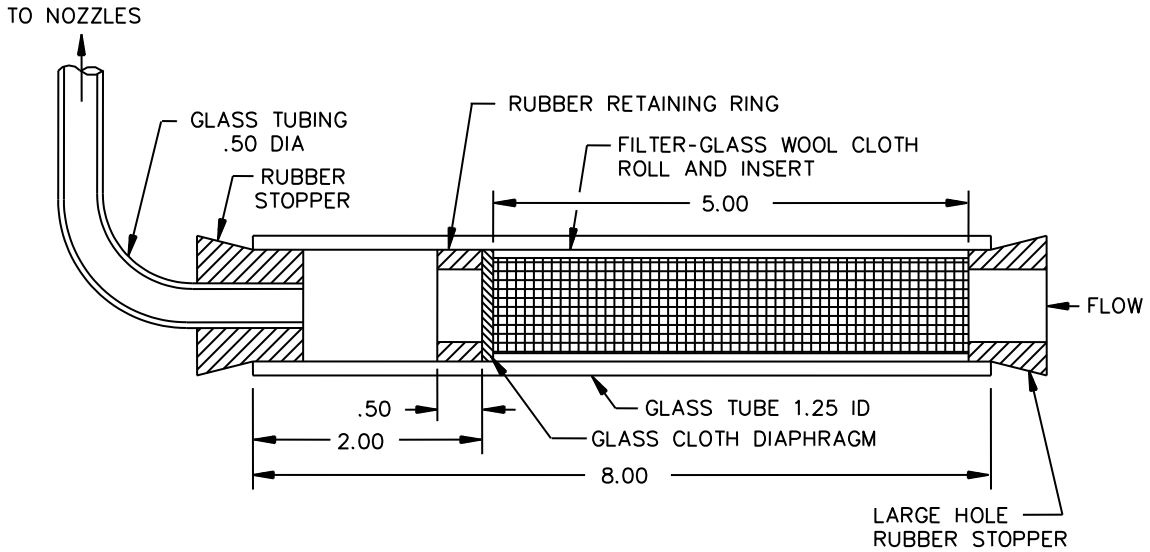

Inches	Millimeters
.50	12.70
1.25	31.75
2.00	50.80
5.00	127.00
8.00	203.20

NOTES:
1. Dimensions are in inches.
2. Millimeters are given for general information only.

FIGURE 1046–1. Salt solution filter.

Source: https://assist.dla.mil -- Downloaded: 2016-12-05T07:38Z
Check the source to verify that this is the current version before use.

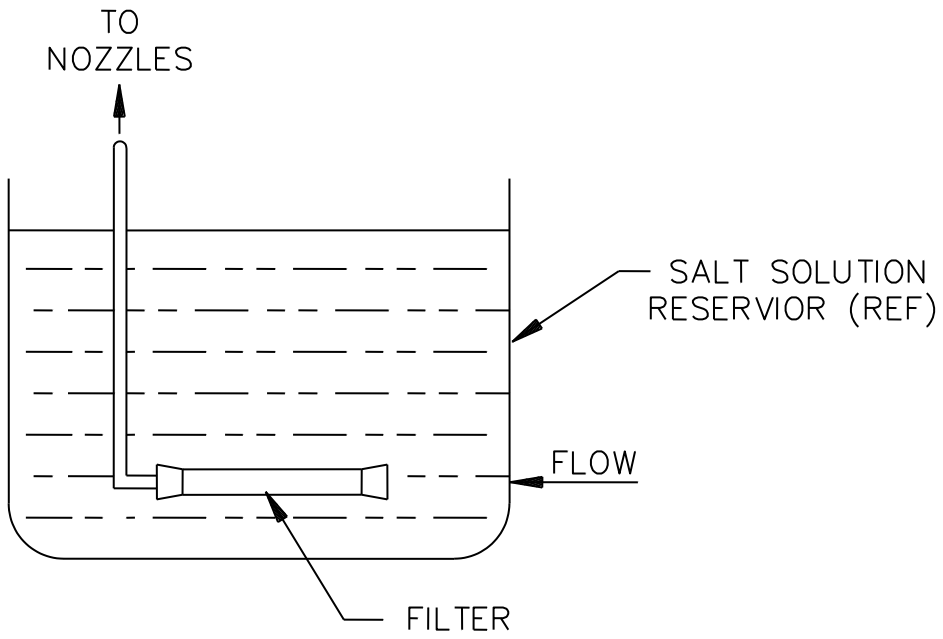

FIGURE 1046–2. Location of salt solution filter.

Source: https://assist.dla.mil -- Downloaded: 2016-12-05T07:38Z
Check the source to verify that this is the current version before use.

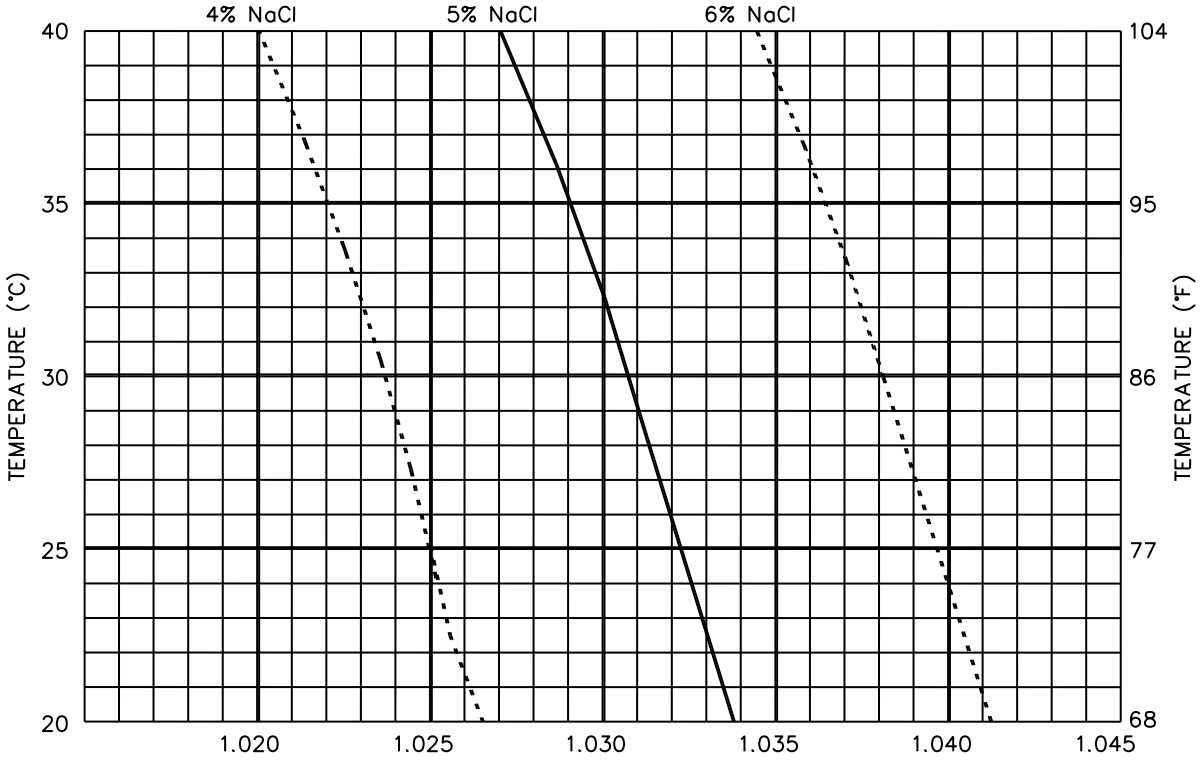

FIGURE 1046–3. Variations of specific gravity of salt (NaCl) solution with temperature.

Source: https://assist.dla.mil -- Downloaded: 2016-12-05T07:38Z
Check the source to verify that this is the current version before use.

METHOD 1048.1

BLOCKING LIFE

1. Purpose. The purpose of this test method is to determine compliance with the specified lambda (λ) for semiconductor devices subjected to the specified conditions.

2. Mounting. The method of mounting is usually optional for blocking life tests since little power is dissipated in the device. Devices with normally high reverse leakage current may be mounted to heat sinks to prevent thermal run-away conditions.

3. Procedure. Blocking life is performed with the primary blocking junction, or insulation, reverse biased at an artificially elevated temperature for the time period in accordance with the life test requirements of MIL–PRF–19500 and herein; at the temperature specified (normally +150°C and at 80 to 85 percent of the rated voltage relevant to the device (V_R, V_Z (min), V_{CB}, V_{AG}, V_{DG}, and V_{GS}).

At the end of the high-temperature test time, as specified, the ambient temperature shall be lowered. The test voltage shall be maintained on the devices until a case temperature of +30°C ±5°C is attained. After this ambient temperature has been established, the bias voltage shall be maintained until testing is performed; testing shall be completed within 24 hours after the removal of power. After removal of the bias voltage, no other voltage shall be applied to the device before taking the post-test leakage current measurement. Post-test measurements shall be taken as specified. For bipolar transistors, the V_{CB} base is not to exceed the maximum collector-emitter voltage rating.

4. Summary. The following details shall be specified in the applicable performance specification sheet or acquisition document:

a. Test temperature (see 3).

b. Test conditions: Voltage and terminals to be biased (see 2 and 3).

c. Test time (see 3).

d. Pre- and post-test measurements (see 3).

e. Time for completion of post-test measurements, if other than 24 hours (see 3).

Source: https://assist.dla.mil -- Downloaded: 2016-12-05T07:38Z
Check the source to verify that this is the current version before use.

This page is intentionally left blank.

Source: https://assist.dla.mil -- Downloaded: 2016-12-05T07:38Z
Check the source to verify that this is the current version before use.

METHOD 1049

BLOCKING LIFE (SAMPLE PLAN)

1. Purpose. The purpose of this test method is to determine compliance with the specified sample plan for semiconductor devices subjected to the specified conditions.

2. Mounting. The method of mounting is usually optional for blocking life tests since little power is dissipated in the device. Devices with normally high reverse leakage current may be mounted to heat sinks to prevent thermal run-away conditions.

3. Procedure. Unless otherwise specified, blocking life is performed with the primary blocking junction, or insulation, reverse biased at an artificially elevated temperature for 340 hours, at the temperature specified (normally +150°C and at 80 to 85 percent of the rated voltage relevant to the device (V_R, V_Z (min), V_{CB}, V_{AG}, V_{DG}, and V_{GS}).

At the end of the high-temperature test time, as specified, the ambient temperature shall be lowered. The test voltage shall be maintained on the devices until a case temperature of +30°C ±5°C is attained. After this ambient temperature has been established, the bias voltage shall be maintained until testing is performed; testing shall be completed within 24 hours after the removal of power. After removal of the bias voltage, no other voltage shall be applied to the device before taking the post-test leakage current measurement. Post-test measurements shall be taken as specified.

4. Summary. The following details shall be specified in the applicable performance specification sheet or acquisition document:

a. Test temperature (see 3).

b. Test conditions: Voltage and terminals to be biased (see 2 and 3).

c. Test time (see 3).

d. Pre- and post-test measurements (see 3).

e. Time for completion of post test measurements, if other than 24 hours (see 3).

f. Criteria for failure (see 3).

Source: https://assist.dla.mil -- Downloaded: 2016-12-05T07:38Z
Check the source to verify that this is the current version before use.

This page is intentionally left blank.

Source: https://assist.dla.mil -- Downloaded: 2016-12-05T07:38Z
Check the source to verify that this is the current version before use.

METHOD 1051.7

TEMPERATURE CYCLING (AIR TO AIR)

1. Purpose. This test method is conducted to determine the resistance of a semiconductor device to extremes of high and low temperatures, and to the effect of alternate exposures to these extremes.

1.1 Terms and definitions.

1.1.1 DUT. The device or individual piece being tested.

1.1.2 Dwell time. The time from introduction of the load to one extreme temperature (hot chamber or cold chamber) until the initiation of the transfer to the other extreme temperature (hot chamber or cold chamber). The total dwell time equals the ramp time plus the soak time.

NOTE: During chamber profiling and characterization, a device temperature sensitive parameter should be used to ensure that for various load conditions, the specified soak time shall be guaranteed.

1.1.3 Load. The devices under test (DUT) and the fixtures holding those DUTs during the test. Maximum load shall be determined by using the worst case load temperature with specific DUT loading. Monolithic loads used to simulate loading may not be appropriate when air circulation is reduced by load configuration. The maximum loading must meet the specified conditions.

1.1.4 Maximum load. The largest load for which the worst case load temperature meets the timing requirements (see 3.1).

1.1.5 Monitoring sensor. The temperature sensor that is located and calibrated so as to indicate the same temperature as at the worst case indicator DUT location. The worst case indicator DUT location is identified during the periodic characterization of the worst case load temperature.

1.1.6 Ramp rate. The time allowed to reach temperature divided by the total time DUTs spend in the chamber.

1.1.7 Ramp time. The time allowed for reaching a given temperature. This timing starts when the load is introduced to the chamber and ends when the load reaches temperature (see table 1051–I).

CAUTION: Due to the ramp capability of test equipment available today, if care is not taken when profiling and characterizing various load conditions or setting up the equipment, thermal shock can be induced. The ramp rate should be controlled as defined in 3.1 or one can create a thermal shock instead of temperature cycling.

1.1.8 Soak time. The elapsed time that occurs after the load has reached temperature (see table 1051–I).

1.1.9 Transfer time. The elapsed time between DUT removal from one temperature extreme and introduction into the other.

1.1.10 Working zone. The volume in the chamber(s) in which the temperature of the load is controlled within the limits specified in table 1051–I.

1.1.11 Worst case load temperature. The worst case load temperature is the temperature of a specific area in the chamber when measured by thermocouples located at the center and at each corner of the load. The worst case load temperature shall be determined at periodic intervals.

Source: https://assist.dla.mil -- Downloaded: 2016-12-05T07:38Z
Check the source to verify that this is the current version before use.

2. Apparatus. The chamber(s) used shall be capable of providing and controlling the specified temperatures in the working zone(s) when the chamber is loaded with a maximum load. The thermal capacity and air circulation shall enable the working zone and loads to meet the specified conditions and timing (see 3.1). Worst case load temperature shall be continually monitored during test by indicators or recorders reading the monitoring sensor. Direct heat conduction to DUTs shall be minimized.

3. Procedure. DUTs shall be placed in such a position with respect to the air stream that there is substantially no obstruction to the flow of air across and around the DUT. The use of diffusers is permitted to avoid thermal shock, which is caused by exceeding the ramp rate requirements of 3.1. When special mounting is required, it shall be specified. The DUT shall then be subjected to the specified condition for the specified number of cycles performed continuously. Unless otherwise specified, this test shall be conducted for a minimum of 20 cycles using test condition C. One cycle consists of steps 1 and 2 or the applicable test condition to be counted as a cycle. Completion of the total number of cycles specified for the test may be interrupted for the purpose of test chamber loading or unloading of device lots or as the result of power or equipment failure. However, if for any reason the number of incomplete cycles exceed 10 percent of the total number of cycles specified, one cycle must be added for each incomplete cycle. See figure 1051–1 herein.

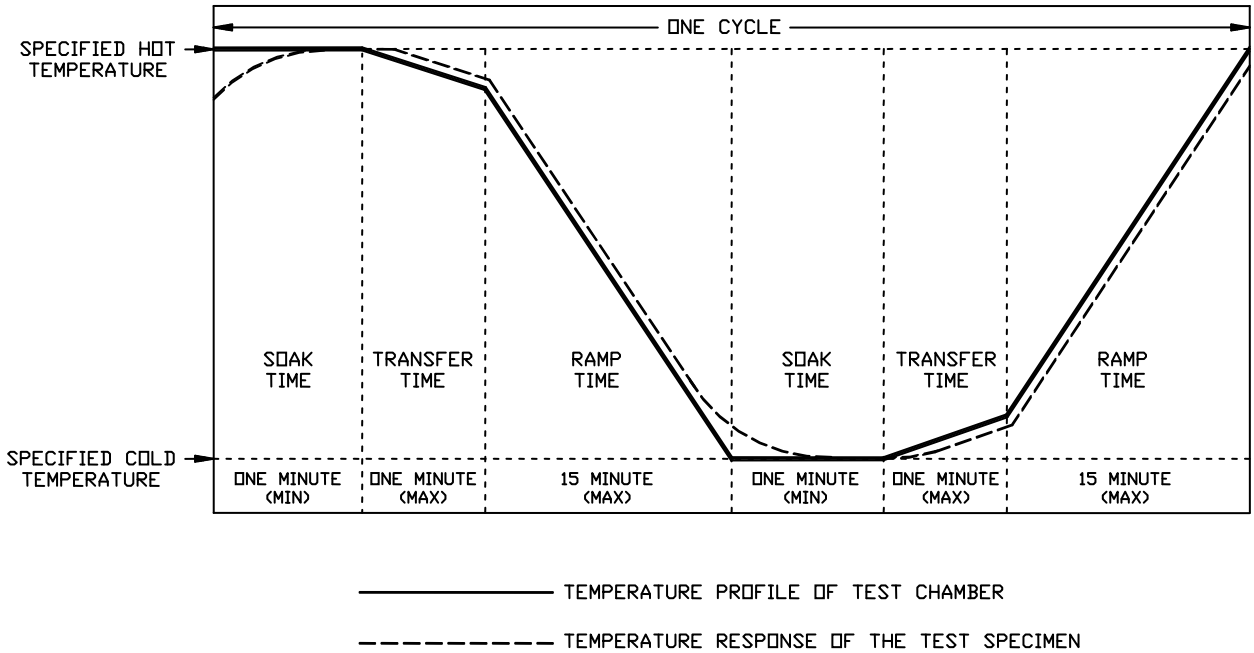

FIGURE 1051–1. Timing diagram showing one cycle.

3.1 Timing. The total transfer time from the hot chamber to the cold chamber or the cold chamber to the hot chamber shall not exceed 1 minute. The load may be transferred after a soak of 1 minute minimum. The soak time shall begin once the worst case load (point which reaches temperature last) has reached the specified temperature. However, the dwell time shall not be less than 10 minutes. The ramp rate for DUT shall operate within the following temperature change rates: 15°C/minute minimum and 50°C/minute maximum independent of load size. However the total ramp time shall not exceed 15 minute. If necessary, the load size shall be increased or decreased to meet the specified temperature change rates.

Source: https://assist.dla.mil -- Downloaded: 2016-12-05T07:38Z
Check the source to verify that this is the current version before use.

TABLE 1051–I. Temperature–cycling test conditions.

Step	Dwell time (minutes)	Test condition, temperature, and tolerance (°C)						
		A	B	C	D	E	F	G
1 Cold	≥ 10	–55 +0 / –10	–55 +0 / –10	–55 +0 / –10	–65 +0 / –10	–65 +0 / –10	–65 +0 / –10	–55 +0 / –10
2 Hot	≥ 10	85 +10 / –0	125 +15 / –0	175 +15 / –0	200 +15 / –0	300 +15 / –0	150 +15 / –0	150 +15 / –0

NOTE: Steps 1 and 2 may be interchanged. The load temperature may exceed the + or – zero (0) tolerance during the recovery time. Other tolerances shall not be exceeded.

4. Summary. The following details shall be specified in the applicable performance specification sheet or acquisition document:

a. Special mounting, if applicable (see 3).

b. Test condition letter, if other than test condition C herein (see 3).

c. Number of test cycles, if other than 20 cycles (see 3).

d. End-point measurements and examinations, (e.g., end-point electrical measurements, seal test method 1071 of this test method standard), or other acceptance criteria.

Source: https://assist.dla.mil -- Downloaded: 2016-12-05T07:38Z
Check the source to verify that this is the current version before use.

This page is intentionally left blank.

Source: https://assist.dla.mil -- Downloaded: 2016-12-05T07:38Z
Check the source to verify that this is the current version before use.

METHOD 1054.1

POTTED ENVIRONMENT STRESS TEST

1. Purpose. The purpose of this test method is to determine semiconductor device design susceptibility to intermittent open failures in conformally coated printed boards environments while under thermal cycle. The destructive effects of tension and compression are magnified in the potted condition allowing for early detection of design weakness.

2. Apparatus.

   a. Container of 3 cubic inches (49.2 cc) minimum with rigid walls of .125 inch (3.18 mm) thick minimum.

   b. Devices for testing corrected to a common bussbar arranged in a common cathode or common anode configuration (see figure 1054–1).

   c. Thermal cycling chamber.

   d. Hot plate capable of maintaining +70°C.

   e. Curve tracer, Tektronix 576 or equivalent.

   f. Potting medium, Emerson and Cuming Stycast 2851 MT or equivalent.

3. Procedure.

   a. Place devices in a common connection configuration into the container with provisions made to ensure device clearance of .125 inch (3.18 mm) minimum from the container walls.

   b. Pour the potting medium into shell and allow to cure while following all manufacturer's recommendations.

   c. Place cured assembly on a hot plate and allow the assembly to reach thermal equilibrium of +70°C. Unless otherwise specified, observe the forward voltage trace of each device at a current level of 100 mA. Forward voltage trace should show no incidence of instability or open condition. Record all failures by serial number.

   d. Allow assembly to cool at room temperature and place into a thermal shock chamber to perform 20 shocks in accordance with test method 1051 of this test method standard. Remove assembly and allow to reach room temperature.

   e. Repeat 3.c and record failures.

4. Summary. The number of specimens to be tested shall be specified in the applicable performance specification sheet or acquisition document (see 3).

Source: https://assist.dla.mil -- Downloaded: 2016-12-05T07:38Z
Check the source to verify that this is the current version before use.

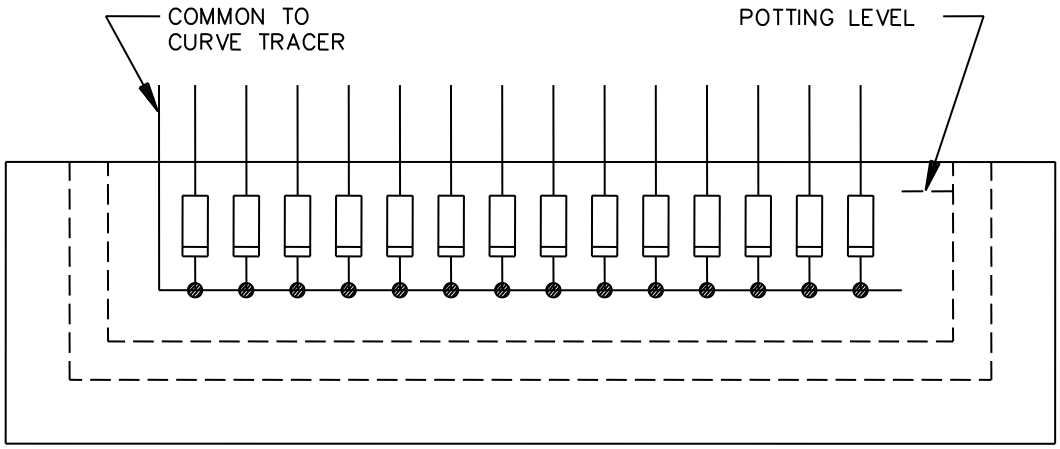

FIGURE 1054–1. Potted diodes.

Source: https://assist.dla.mil -- Downloaded: 2016-12-05T07:38Z
Check the source to verify that this is the current version before use.

METHOD 1055.1

MONITORED MISSION TEMPERATURE CYCLE

1. Purpose. This test method is to determine the ability of semiconductor devices to withstand the effect of thermal stress and rapid dimensional change on internal structural elements caused by the application of power in rapidly changing temperature environments as in mission profile system testing.

2. Apparatus. The equipment required shall consist of that listed below and shall have the stated capabilities.

   a. A chamber of sufficient temperature range and change rate capability with cabling exiting through insulated barriers to external bias and monitoring electronics. Cabling for all monitoring equipment shall provide Kelvin connections.

   b. Electronic regulated power supply(s) capable of maintaining the stated bias tolerances.

   c. Electronic voltage monitoring device with capability of indicating an open circuit of 20 ms or more in duration.

3. Procedure. Devices conforming to all electrical and mechanical parameter requirements shall be tested as follow:

   a. First subjected to high temperature stabilization bake of test method 1032 of this test method standard.

   b. The devices shall then be subjected to temperature cycling test condition C of test method 1051 of this test method standard with the following exceptions:

      (1) No dwell time is required at +25°C.

      (2) Test condition C shall be +175°C, +5°C, –0°C.

      (3) Temperature shall remain at the stabilized extremes for 10 minutes minimum.

   c. Electrical measurements shall be performed to ensure that, proceeding to the monitored thermal cycle portion of this test method, all devices have remained within specification.

   d. Unless otherwise specified, the temperature extremes shall be as stated below (from worse case mission profile requirements of MIL–HDBK–781).

   e. The temperature and operating profile shall be specified on figure 1055–1. Temperature change rate shall average not less than 5°C per minute, but not greater than 10°C per minute.

   f. The device(s) shall be placed individually, or in series connection, within the chamber. The device(s) shall be connected to a constant current power supply capable of supplying current to raise the device junction(s) to +125°C minimum, +150°C maximum temperature during the high temperature portion of each cycle.

Source: https://assist.dla.mil -- Downloaded: 2016-12-05T07:38Z
Check the source to verify that this is the current version before use.

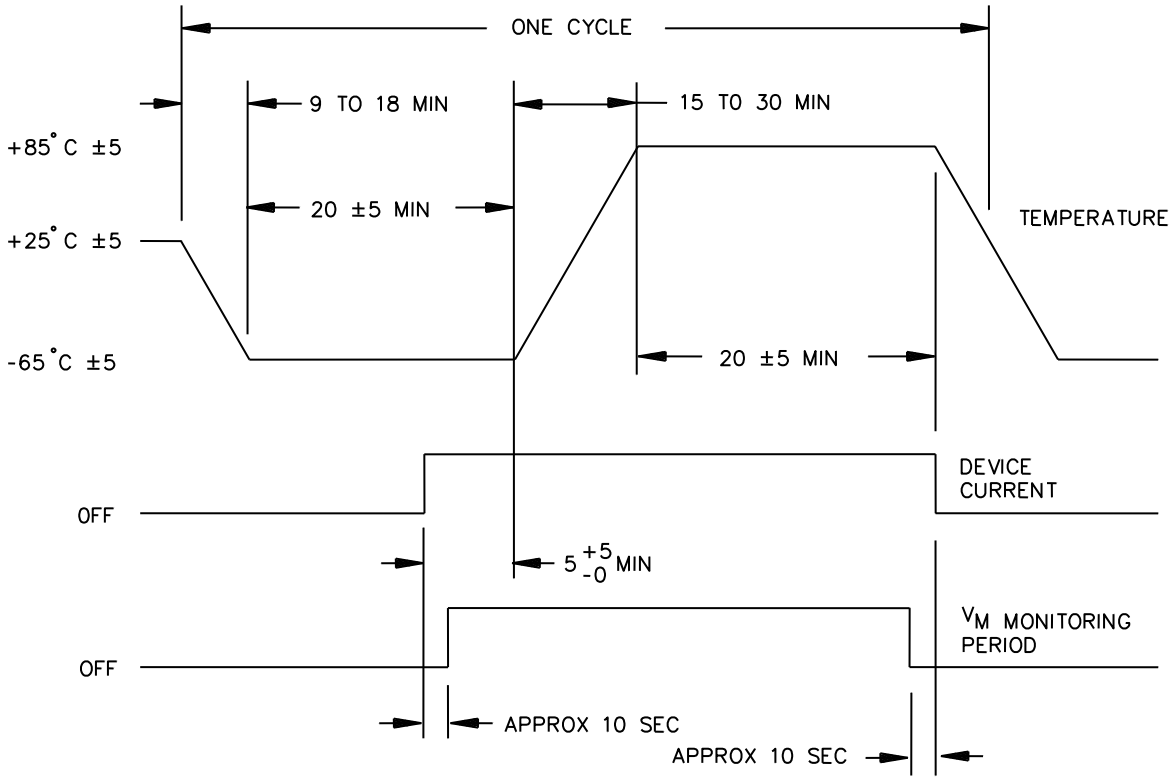

FIGURE 1055–1. Monitored mission cycle temperature and operating profile.

3.1 Electrical monitoring. Connect electrical monitoring volt meter leads to the extremes of the device(s) and series resistor (see figure 1055–2). Apply the current to raise each junction temperature approximately +50°C. The value of R shall be chosen to cause a 10 ±3 percent increase in monitoring voltage, V_M, if open circuit occurs. Open switch S1 and verify an increase in V_M to verify circuit operation. Remove power.

Source: https://assist.dla.mil -- Downloaded: 2016-12-05T07:38Z
Check the source to verify that this is the current version before use.

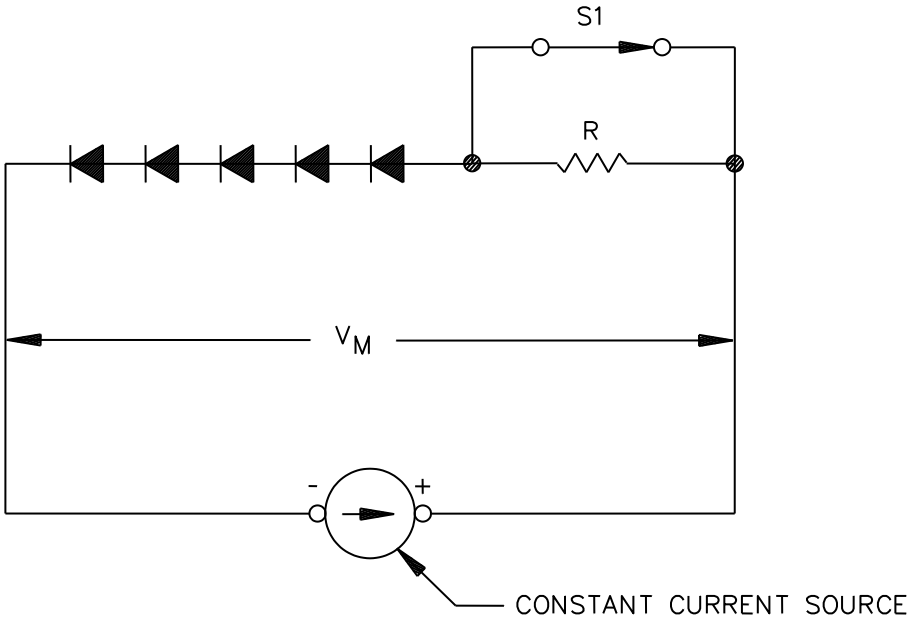

FIGURE 1055–2. Monitored mission cycle test circuit.

3.2 Monitoring voltage increase. Close S1 and perform six temperature cycles in accordance with figure 1055–1 while monitoring for increases in voltage level above the highest (cold temperature) value.

3.3 Failures. Failures in the first two cycles may be considered non-chargeable de-bug events, if analysis finds fault with test circuitry. The last four cycles shall be failure free.

NOTE: Unless otherwise specified, a momentary, or continuous, open circuit (indicated by an increase in the monitored voltage) in any of the last four cycles, shall be considered failure.

4. Summary. The following shall be specified in the applicable performance specification sheet or acquisition document:

a. The number of specimens to be tested.

b. Special fixturing as applicable.

c. Number of test cycles, if other than six cycles.

Source: https://assist.dla.mil -- Downloaded: 2016-12-05T07:38Z
Check the source to verify that this is the current version before use.

This page is intentionally left blank.

Source: https://assist.dla.mil -- Downloaded: 2016-12-05T07:38Z
Check the source to verify that this is the current version before use.

METHOD 1056.8

THERMAL SHOCK (LIQUID TO LIQUID)

1. Purpose. This test method is conducted to determine the resistance of the semiconductor device to sudden exposure to extreme changes in temperature and to the effect of alternate exposures to these extremes.

1.1 Terms and definitions.

1.1.1 Cycle. A cycle consists of starting at ambient room temperature, proceeding to step 1, then to step 2, or alternately proceeding to step 2, then to step 1, and then back to ambient room temperature without interruption.

1.1.2 Dwell time. The total time the load is immersed in the bath.

1.1.3 Load. The devices under test (DUTs) and the fixtures holding those devices.

1.1.4 Maximum load. The maximum mass of devices and fixtures that can be placed in the bath while maintaining specified temperatures and times.

1.1.5 DUT. The device or individual piece being tested.

1.1.6 Transfer time. The elapsed time measured from removal of the load from one bath until insertion in the other bath.

1.1.7 Worst case load temperature. The body temperature of a specific DUT located at the center of the load.

2. Apparatus. The baths used shall be capable of providing and controlling the specified temperatures in the working zone(s) when the bath is loaded with a maximum load. The thermal capacity and liquid circulation must enable the working zone and loads to meet the specified conditions and timing (see 3.1). Worst case load temperature shall be continually monitored during test by indicators or recorders reading the monitoring sensor(s). The worst case load temperature under maximum load conditions and configuration shall be verified as needed to validate bath performance. Perfluorocarbons that meet the physical property requirements of table 1056–I shall be used for conditions C and D.

3. Procedure. DUTs shall be placed in the bath in a position so that the flow of liquid across and around them is substantially unobstructed. Unless otherwise specified (see 4.b and 4.c), the load shall be subjected to condition A of table 1056–II for a duration of 15 cycles. Completion of the total number of cycles specified for the test may be interrupted for the purpose of loading or unloading of device lots or as the result of power or equipment failure. However, if the number of interruptions for any given test exceeds 10 percent of the total number of cycles specified, the test must be restarted from the beginning.

3.1 Timing. The total transfer time from hot to cold or from cold to hot shall not exceed 10 seconds. The load may be transferred when the worst case load temperature is within the limits specified in table 1056–II. However, the dwell time shall not be less than 2 minutes and the load shall reach the specified temperature within 5 minutes.

4. Summary. The following details shall be specified in the applicable performance specification sheet or acquisition document:

a. Special mounting, if applicable.

b. Test condition, if other than test condition A (see 3).

c. Number of test cycles, if other than 15 cycles (see 3).

d. End-point measurements and examinations such as end-point electrical measurements, seal test (test method 1071 of this test method standard), or other acceptance criteria.

Source: https://assist.dla.mil -- Downloaded: 2016-12-05T07:38Z
Check the source to verify that this is the current version before use.

TABLE 1056–I. Physical property requirements of perfluorocarbon fluids. 1/

Test condition		C	D	ASTM test method
Step 1	Boiling point, °C	>125	>150	D1120
	Density at 25°C gm/ml	>1.6		Not applicable
	Dielectric strength volts/mil	>300		D877
	Residue, microgram/gram	<50		D2109
	Appearance	Clear, colorless liquid		Not applicable
Step 2	Density at 25°C gm/ml	>1.6		Not applicable
	Dielectric strength volts/mil	>300		D877
	Residue, microgram/gram	<50		D2109
	Appearance	Clear, colorless liquid		Not applicable

1/ The perfluorocarbon used shall have a viscosity less than or equal to the thermal shock equipment manufacturer's recommended viscosity at the minimum temperature.

TABLE 1056–II. Thermal shock temperature tolerances and suggested fluids. 1/

Test condition		A and B	C	D
		Temperature	Temperature	Temperature
Step 1	Temperature tolerance, °C	100 +10 / –2	125 +10 / –0	150 +10 / –0
	Recommended fluid	Water 2/ or Perfluorocarbon 3/	Perfluorocarbon 3/	Perfluorocarbon 3/
Step 2	Temperature tolerance, °C	–0 +2 / –10	–55 +0 / –10	–65 +0 / –10
	Recommended fluid	Water 2/ or Perfluorocarbon 3/	Perfluorocarbon 3/	Perfluorocarbon 3/

1/ Ethylene glycol shall not be used as a thermal shock test fluid.
2/ Water is indicated as an acceptable fluid for this temperature range. Its suitability chemically shall be established prior to use. When water is used as the fluid for condition A and the specified temperature tolerances are insufficient due to altitude considerations, the following alternate test conditions may be used:
   a. Temperature: +100°C –6°C, 0°C +6°C.
   b. Cycles shall be increased to 20.
3/ Perfluorocarbons contain no chlorine or hydrogen.

Source: https://assist.dla.mil -- Downloaded: 2016-12-05T07:38Z
Check the source to verify that this is the current version before use.

METHOD 1057.1

RESISTANCE TO GLASS CRACKING

1. Purpose. This test method provides a means of judging the relative resistance of glass encapsulated semiconductor devices to cracking under conditions of thermal stress. It employs immersion in a hot liquid and then water to simulate the thermal stresses associated with both device manufacturing processes and end user assembly procedures.

2. Apparatus. Liquid baths shall be used which are capable of providing and maintaining the specified temperatures in the working zone when loaded with a maximum load. Bath temperatures under maximum load conditions shall be verified, as needed, to validate bath performance. Liquid composition shall be as specified herein.

3. Procedure. Remove any paint or other surface coatings. Clean the device using a general purpose cleaner/degreaser, rinse in water, and then acetone. Subsequent to cleaning, devices shall be placed into the baths defined in table 1057–I for the applicable test condition using a dipping tool that will not significantly heat sink the body of the DUT. DUTs shall be fully immersed in the first bath for the specified period of time then transferred to, and fully immersed in, the second bath. Unless otherwise specified, the test shall be considered complete upon removal of the DUT from the second bath.

3.1 Timing. DUTs shall be immersed into, and removed from, the first (hot) bath at a rate of 1.0 ±.5 inch (25.4 ±12.7 mm) per second. The maximum preheat dwell time above the hot bath prior to immersion shall be in accordance with table 1057–I. Immersion dwell time in the hot bath shall be in accordance with table 1057–I. DUTs shall be released completely into the cold bath after their removal from the hot bath in accordance with the dwell time specified in table 1057–I.

4. Failure criteria. DUTs that fail to meet the glass crack criteria of test method 2074 of this multipart test method standard shall be considered rejects. If flux was used for test condition B, it shall be removed prior to any visual examination.

5. Summary. The following shall be specified in the applicable performance specification sheet or acquisition document:

a. Sample size and acceptance number.

b. Test condition.

c. Special fixturing as applicable.

d. Number of test cycles if other than one cycle.

Source: https://assist.dla.mil -- Downloaded: 2016-12-05T07:38Z
Check the source to verify that this is the current version before use.

TABLE 1057–I. Conditions and temperatures.

Step		Test condition	
		Condition A	Condition B
0	Pre-immersion conditions or preparations.	Samples at room temperature	1/ 2/
1	Recommended hot bath fluid	Water	Molten solder
	Temperature and tolerance	100°C ±5°C	235°C ±5°C
	Maximum preheat dwell above hot bath	7.0 seconds	7.0 seconds
	Immersion dwell time in hot bath	6 ±1.0 seconds	6 ±1.0 seconds
2	Recommended cold bath fluid	Water	Water
	Temperature and tolerance	0°C ±5°C	25°C ±5°C
	Dwell time between hot and cold bath	3.0 seconds max	10 to 15 seconds
	Immersion dwell time in cold bath	5.0 seconds min	5.0 seconds min

1/ The use of flux is optional but recommended to prevent solder irregularities and "blobs".
2/ A flux dip in accordance with test method 2026 of this multipart test method standard is recommended.

Source: https://assist.dla.mil -- Downloaded: 2016-12-05T07:38Z
Check the source to verify that this is the current version before use.

METHOD 1061.1

TEMPERATURE MEASUREMENT, CASE AND STUD

1. Purpose. This test method covers a method of measuring case temperature of hex-base semiconductor devices.

2. Apparatus.

2.1 Type of thermocouple. The thermocouple material shall be copper-constantan, as recommended by the "Standard Handbook for Electrical Engineers", for the range of –190°C to +350°C. The wire size shall be no larger than AWG size 30. The junction of the thermocouple shall be welded together to form a bead rather than soldered or twisted.

2.2 Accuracy. The thermocouple shall have an accuracy of ±0.5°C. Under load conditions, slight variations in the temperature of different points on the case may reduce this accuracy to ±1.0°C for convection cooling, and ±2.0°C for forced air ventilation.

3. Procedure.

3.1 Method of mounting. A small hole, just large enough to insert the thermocouple, shall be drilled approximately .031 inch (0.79 mm) deep into the flat of the case hex at a point chosen by the device manufacturer. The edge of the hole should then be peened with a small center punch to force a rigid mechanical contact with the welded bead of the thermocouple. If forced air ventilation is used, the thermocouple shall be mounted away from the air stream and the thermocouple leads close to the junction shall be shielded.

3.2 Other methods of mounting. Other methods of mounting thermocouple, with the possible exception of the thermocouple welded directly to the case, will result in temperature readings lower than the actual temperature. These deviations will result from:

a. Inadequate contact with the case using cemented thermocouples.

b. External heat sink in contact with the thermocouple using pressure contacts.

4. Summary. The following conditions shall be specified in the applicable performance specification sheet or acquisition document:

a. Method of mounting (see 3).

b. Test equipment, if required.

Source: https://assist.dla.mil -- Downloaded: 2016-12-05T07:38Z
Check the source to verify that this is the current version before use.

This page is intentionally left blank.

Source: https://assist.dla.mil -- Downloaded: 2016-12-05T07:38Z
Check the source to verify that this is the current version before use.

METHOD 1066.1

DEW POINT

1. Purpose. The purpose of this test method is to monitor the semiconductor device parameter for a discontinuity under the specified conditions.

2. Apparatus. The apparatus used in this test method shall be capable of varying the temperature from the specified high temperature to –65°C and return to the specified high temperature while the parameter is being measured.

3. Procedure. The voltage and current specified in the performance specification sheet shall be applied to the terminals and the parameter monitored from the specified high temperature to –65°C and return to the specified high temperature. The dew point temperature is indicated by a sharp discontinuity in the parameter being measured with respect to temperature. If no discontinuity is observed, it shall be assumed that the dew point is at a temperature lower than –65°C and the device is acceptable.

4. Summary. The following conditions shall be specified in the applicable performance specification sheet or acquisition document:

a. Test temperature (high) (see 2).

b. Test voltage and current (see 3).

c. Test parameter (see 3).

Source: https://assist.dla.mil -- Downloaded: 2016-12-05T07:38Z
Check the source to verify that this is the current version before use.

This page is intentionally left blank.

Source: https://assist.dla.mil -- Downloaded: 2016-12-05T07:38Z
Check the source to verify that this is the current version before use.

METHOD 1071.9

HERMETIC SEAL

1. Purpose. The purpose of this test method is to determine the hermeticity of semiconductor devices with designed internal cavities.

2. Terms and definitions.

2.1 Standard leak rate. The standard leak rate L is defined as that quantity of dry air at +25°C in atmospheric cubic centimeters (atm-cc) flowing through a leak, or multiple leak, paths per second when the high-pressure side is at 15 psia (103 kPa) and the low-pressure side is at a pressure of not greater than .0193 psia (133 Pa). The standard leak rate shall be expressed in units of atmospheric cubic centimeters per second of air (atm-cc/sec (air)).

2.2 Equivalent standard leak rate. The equivalent standard leak rate L of a given package, is the measured leak rate of the device under test, equated to the same package with the same leak geometry that would exist under the standard leak rate conditions. The equivalent standard leak rate shall be expressed in units of atmospheric cubic centimeters per second of air (atm-cc/sec (air)).

2.3 Leakage measurement. The measurement of gaseous leakage for a device package under test are defined as follows:

a. For helium (He) measurements. The R_1 measurement of helium using a helium mass spectrometer (HMS) under specified conditions. The R_1 reading is not the leak rate of the device, but the result of the size of the leak, and the amount of helium that is within the package at the moment of measurement. The R_1 reading is the maximum value or pass/fail point of measurement. Any measured value greater than the calculated R_1 value indicates a leak failure.

b. For radioisotope leakage measurements. Qs is the measurement of the krypton-85 (^{85}Kr) that has entered the package under specified conditions. The measured leak rate shall be expressed in units of atmospheric cubic centimeters per second of the gas medium used for the test (e.g., atm-cc/sec (Kr)).

For purposes of comparison with rates determined by other methods of testing, all measured leak rates shall be converted to the equivalent standard leak rates, (converted to air equivalents).

2.4 Hermetic seal. A hermetic seal is one in which the gas or gases contained in the internal free volume of the sealed system shall not escape or be exchanged with any gas, vapor or liquid contained in the environment external to the sealed system, within the leak rate ranges detectable by this test method. For the purpose of this test method, a hermetically sealed device shall meet the requirements herein.

2.5 Air leak rate ranges.

Gross leak rate range:	Leak rates greater than 5×10^{-6} atm-cc/sec (air).
Fine leak rate range:	Leak rates less than 5×10^{-6} atm-cc/sec (air).
Fine-leak-rate ratios for krypton:	atm-cc/sec (Kr) x 1.712 = atm-cc/sec (air).
Fine-leak-rate ratios for krypton:	atm-cc/sec (Kr) x 4.61 = atm-cc/sec (He).
Fine-leak-rate ratios for helium:	atm-cc/sec (He) x .37 = atm-cc/sec (air)
Fine-leak-rate ratios for helium:	atm-cc/sec (He) x .21 = atm-cc/sec (Kr).

2.6 Fine leak failure criteria. The failure criteria in 10.2.2 in atm-cc/sec (air) shall apply for all dry gas leak test procedures in this test method.

Source: https://assist.dla.mil -- Downloaded: 2016-12-05T07:38Z
Check the source to verify that this is the current version before use.

2.7 Testing limitations. The history of device leak rate testing shall be maintained on travelers accompanying devices. Devices that have previously been subjected to bubble tests will not yield reliable test results when subjected to dry gas HMS leak testing. The radioisotope fine leak test condition G_1 can be used with the test sensitivity extended 1 order of magnitude. The leak rate detected of any device previously exposed to any liquid media (e.g. fluorocarbons) will be assumed to be one or two orders of magnitude larger than measured. It is important to note that fluorocarbon residues introduces "surface-sorption" problems that affect the standard testing procedures.

NOTE: The leak rate measurements are not necessarily performed with a one atmosphere differential, as implied by the standard leak rate. The equivalent conversion represents gas medium only.

2.8 Internal free cavity volume. The internal volume of a device less the area/volume of the die and any conformal coating.

3. Test conditions.

3.1 Gross leak test conditions. The following test conditions should be specified for gross leak testing:

a. Test condition A (see 4): Radioisotope wet gross leak test.

b. Test condition B (see 5): Radioisotope dry gross leak test.

c. Test condition C (see 6 and 17.e): Liquid perfluorocarbon gross leak.

d. Test condition D (see 7, 3.b, and 17.e): Bubble test.

e. Test condition E (see 8): Penetrant dye gross leak.

f. Test condition J (see 11): Weight gain gross leak.

g. Test condition K (see 12): Fluorocarbon vapor detection gross leak.

h. Test condition L_1 (see 13): Optical gross leak.

i. Test condition G_2 (see 9.6): Radioisotope gross/fine combination.

j. Test conditions CH_1 and CH_2 (see 10 and 15): Cumulative helium gross/fine combination.

k. Test conditions H_1 and H_2 (see 10): Helium fine leak test.

l. Test condition G_t (see 3.3 and 14): Radioisotope thermal leak test.

3.2 Fine leak test conditions. The following test conditions should be specified for fine leak testing:

a. Test condition G_1 (see 9), radioisotope fine leak test or G_1/G_2 (see 9.6) fine/gross combination leak test.

b. Test conditions H_1 and H_2 (see 10): Tracer gas (helium) leak test.

c. Test conditions CH_1 and CH_2 (see 10): Cumulative helium gross/fine combination.

3.3 Radioisotope thermal leak test (see 14). Test condition G_t should be used for radioisotope thermal leak testing.

Source: https://assist.dla.mil -- Downloaded: 2016-12-05T07:38Z
Check the source to verify that this is the current version before use.

3.4 Fine and gross leak test procedures. Unless otherwise specified by applicable performance specification sheet, tests shall be conducted in accordance with table 1071–I. When specified (see 15 herein) measurements after test shall be conducted following the leak test procedures. Where bomb pressure specified exceeds the device package capability, alternate pressure, exposure time, and dwell time conditions shall be used provided they satisfy the leak rate, pressure, and time relationships which apply and provided no less than 30 psia (207 kPa) bomb pressure is applied in any case, or for condition L_1, a minimum 10 psia (69 kPa) differential test pressure is applied.

Fine and gross leak tests shall be conducted in accordance with the requirements and procedures of the specified test condition. Testing order shall utilize only the all-dry gas tests first, followed by any liquid immersion gross leak test (i.e.; the option to use the radioisotope gross, fine, or gross/fine combination leak test conditions B, G_1, and G_2 (respectively), may be used together, or in succession, as long as the minimum test requirements are met). The radioisotope dry gas gross leak test B or G_2 may be used for gross leak testing prior to any dry gas fine test. The optical gross leak test, L_1, is an all-dry gas test and can be used before any fine leak test. If any other gross leak test is used, (test conditions A, C, D, E, F, J, or K), the sequence of testing shall use the dry gas fine leak test first, followed by the gross leak test, except in accordance with 14, note 1. When batch testing (more than one device in the leak detector at one time) is used in performing test condition H_1, H_2, and CH a reject condition occurs, it shall be noted as a batch failure. Each device with a cavity greater than 0.5 cm^3 may then be tested individually one time for acceptance if all devices in the batch are retested within the dwell time used to determine the pass/fail point. Devices with cavity less than 0.5 cm^3 shall be measured within ten minutes or re-pressurized and then re-read. For condition G_1 only, devices may be batch tested for acceptance provided, if a reject occurs, all remeasuring of parts individually is completed within 30 minutes after removal from the tracer gas pressurization chamber. For condition G_2 only, devices may be batch tested for acceptance provided, if a reject occurs, all remeasuring of parts individually is completed within 10 minutes after removal from the tracer gas pressurization chamber. For condition K only, devices that are batch tested, and indicate a reject condition, may be retested individually one time using the procedure of 12.2 herein, except that repressurization is not required if the devices are immersed in detector fluid within 20 seconds after completion of the first test, and they remain in the bath until retest. For condition CH only, devices that are batch tested, and indicate a fine leak reject condition, may be retested individually if they are retested within the dwell time used to determine the pass/fail point using the Howl-Mann equation. For CH_1 and CH_2 only, devices which are batch tested, and indicate a gross leak reject condition, may be retested individually if they are retested within the dwell time used to determine the pass/fail point using the Howl-Mann equation or the devices can be re-bombed with helium for at least 60 seconds and then retested.

TABLE 1071–I. Required test sequence.

Volume (cm^3)	Fine leak condition	Gross leak condition
≤ 0.4	G_1, G_2, H_1, H_2, CH_1, CH_2, L_2	CH_1, CH_2, A, B, C, E, G_1, G_2, J, K, L_1 1/ 2/
> 0.4	G_1, G_2, H_1, H_2, CH_1, CH_2, L_2	CH_1, CH_2, A, B, C, D, E, K, L_1 3/
> 0.4	CH_1, CH_2, J 4/	CH_1, CH_2, J 4/

1/ Condition B and G_2 may be used for small cavity devices that contain approved getting material.
2/ Condition J cannot be used for packages whose internal volume is < 0.001 cm^3.
3/ Condition D cannot be used for packages whose internal volume is ≤ 0.05 cm^3.
4/ Condition J may be used as a single test for devices with an internal cavity volume of > 0.4 cm^3 provided the specified requirements can be satisfied by a leak rate of 1 x 10^{-6} atm-cc/sec (air).

Source: https://assist.dla.mil -- Downloaded: 2016-12-05T07:38Z
Check the source to verify that this is the current version before use.

4. Test condition A – radioisotope wet gross leak test. Designed for packages with internal free cavity volume less than 0.05 cm^3 . This test condition may be used for larger packages to detect larger leak paths. This test condition is not intended to replace visual inspection for sealing defects.

4.1 Apparatus. The apparatus required for test condition A shall be as follows:

a. Radioactive tracer gas pressurization console.

b. Counting station equipment consisting of a scintillation crystal, photomultiplier tube, preamplifier, ratemeter, and 85Kr reference standards. The counting station shall be of sufficient sensitivity to determine through the device wall, the radiation level of any ^{85}Kr tracer gas present within the device. The counting station detector shall have a minimum detectability of 500 cpm of ^{85}Kr above ambient background, and shall be calibrated at least once every working shift using ^{85}Kr reference standards and following the equipment manufacturer's instruction, and a record fo proper function maintained.

c. A container of sufficient volume to allow the devices to be covered with red-dye-penetrant solution, evacuated, and subjected to air pressure in the same container.

d. Solutions:

(1) The red dye penetrant solution shall be kept clean and free of contaminants (including wash solvents). The solutions shall be tested and approved by the equipment manufacturer to ensure maximum gettering capability. The equipment manufacturer shall provide a test procedure to be used to verify the efficiency of the solution for both ^{85}Kr gettering and visual detectability.

(2) The solvent for washing the devices after immersion shall be acetone.

e. A tracer gas consisting of a mixture of ^{85}Kr and air. The concentration of ^{85}Kr in air shall be no less than 100 microcuries per atmospheric cubic centimeter (µCi per atm-cc). This value shall be determined at least once each 30 days, following manufacturer's procedure, and recorded in accordance with the calibration requirements of the general test method standard MIL–STD–750. The specific activity may be measured automatically by the equipment during cycling of the equipment. However, it is recommended that an analytical sample of the gas be measured at least annually for low use systems and semiannually for high use systems.

4.2 Procedure. The following four steps shall be followed.

Step 1: The devices shall be immersed in the red dye penetrant solution and evacuated to a pressure of 100 mm of Hg or less for 10 minutes and then pressurized with air for 10 minutes minimum at 45 psia (310 kPa) minimum. The devices shall be removed from the red dye penetrant solution and placed in a fine-screen basket and flushed with acetone by applying a fine-spray of acetone to remove the surface film of the solution. It is recommended that the devices in the fine-screen basket be held over funnel, with the funnel inserted into a large Erlenmeyer flask, (thus minimizing the acetone vapors released into the room). Do not allow any acetone to contaminate the red dye penetrant solution. Immediately following the wash, the devices shall be emptied onto a white surface (such as paper towels), and examined carefully for evidence of red dye penetrant solution exiting from any leaking devices. Any devices with red dye penetrant solution leaking from them shall be rejected as gross leakers.

Step 2: The devices shall then be placed in the radioisotope pressurization tank, (with all excess free volume displaced with aluminum filler blocks), and the tank evacuated to a pressure of 0.5 mm of Hg. The devices shall then be pressurized to a minimum of three atmospheres absolute pressure of ^{85}Kr/air mixture for 12 minutes minimum. The gas mixture shall then be transferred to storage until a pressure of 2.0 mm of Hg maximum exists in the tank. This transfer shall be completed in 2 minutes maximum. The tank shall then be filled with air, and the devices immediately removed from the tank and leak tested within 5 minutes after gas exposure, with a scintillation crystal equipped counting station. It is recommended that batch sizes be kept small enough to allow all devices to be measured within 5 minutes. Any device indicating 500 counts per minute (cpm) or greater above the ambient background of the counting station shall be considered a gross leaker. If all of the devices cannot be measured within 5 minutes, they shall be retested starting at the beginning of step 2.

Source: https://assist.dla.mil -- Downloaded: 2016-12-05T07:38Z
Check the source to verify that this is the current version before use.

Step 3: Failing devices may cross contaminate compliant devices with red dye penetrant solution. Devices which contain red dye penetrant solution may effervesce after being pressurized with ^{85}Kr and may lose the ^{85}Kr trapped within them. The devices shall be emptied onto a white surface (such as paper towels), and examined carefully for any red dye penetrant solution exiting from any leaking devices. Any devices with red dye penetrant solution leaking from them shall be rejected as gross leakers. Gross leak failures with a internal free cavity volume less than 0.05 cm^3 shall be visually inspected at 30X to confirm that the red dye penetrant solution is actually leaking from the device.

Step 4: If any devices are rejected by steps 1 through 3, the procedure (starting with step 2) shall be repeated until no more gross leakers are found.

5. Test condition B – radioisotope dry gross leak. This test shall be used to test devices that internally contain some ^{85}Kr absorbing or adsorbing medium, such as electrical insulation, organic, or molecular sieve, or approved gettering material. If the device does not contain any adsorbing medium this can only be used on parts with 0.1 cc internal free volume or larger, or that can demonstrate that the following requirements are met:

a. A .005 inch (0.13 mm) diameter hole shall be made in a representative unit of the devices to be tested.

b. The device shall be subjected to this test condition and removed from the pressurization tank immediately after the tank is vented to atmosphere, and measured in the counting station. A net reading indicating 500 cpm or greater is considered a reject. The device shall remain a reject for a minimum of 10 minutes after removal from the pressurization tank. If the device does not fail, this test may not be used.

5.1 Apparatus. The apparatus required for test condition B shall be as follows:

a. Radioactive tracer gas pressurization console containing ^{85}Kr/air mixture.

b. A "well type" counting station with a minimum sensitivity of 10,000, cpm per µCi of ^{85}Kr tracer gas and a minimum detectable count rate of 500 cpm above background level. The counting station calibration shall be checked at least once every working shift using a ^{85}Kr reference standard following the equipment manufacturer's procedure, and a record of proper function shall be maintained.

c. A tracer gas consisting of a mixture of ^{85}Kr and air. The concentration of ^{85}Kr in air shall be no less than 100 µCi per atm-cc. This value shall be determined at least once each 30 days, following manufacturer's procedure, and recorded in accordance with the calibration requirements of the general test method standard MIL–STD–750. The specific activity may be measured automatically by the equipment during cycling of the equipment. However, it is recommended that an analytical sample of the gas be measured annually for low use systems and semiannually for high use production systems.

5.2 Procedure. The devices shall be placed in a radioactive tracer gas pressurization tank, (with aluminum filler blocks placed in the tank to displace all unneeded free volume), and the tank shall be evacuated to a pressure not to exceed 66.7 Pa (0.5 torr). The devices shall then be subjected to a minimum of 30 psia (207 kPa) of ^{85}Kr/air gas mixture for 2 minutes. For devices that have pressure limits less than 30 psia (207 kPa), the pressure limit shall be specified and not exceeded. The gas mixture shall then be transferred to storage until a pressure of 266.7 Pa (2.0 torr) maximum exists in the pressurization tank. This gas transfer shall be complete in 3 minutes maximum. The tank shall then be backfilled with air. The devices shall then be removed from the tank and measured within 10 minutes after gas exposure, with a scintillation-crystal-equipped counting station. Any device indicating 500 cpm, or greater, above the ambient background of the counting station shall be considered a gross leak failure. If the devices are not all measured at the end of 10 minutes from removal from the pressurization chamber, the remaining device shall be returned to the pressurization chamber and re-pressurized to a minimum of 30 psia (207 kPa) for a minimum of 0.01 hours, and then measured at the counting station within 10 minutes.

Source: https://assist.dla.mil -- Downloaded: 2016-12-05T07:38Z
Check the source to verify that this is the current version before use.

6 Test condition C – liquid fluorocarbon gross leak. Device packages with less than 0.05 cm^3 internal free volume shall be tested with extremely careful observation. The number of test samples, configuration, and all critical test criteria shall be included in the manufacturer's test procedure.

6.1 Apparatus. The apparatus required for test condition C shall be as follows:

a. A vacuum/pressure chamber for the evacuation and subsequent pressure bombing of devices up to 90 psi (620 kPa) for a maximum of 24 hours.

b. A suitable observation container with provisions to maintain the indicator fluid at a temperature of +125°C ±5°C (+100°C for Germanium transistors with temperature rating of +100°C maximum) and a filtration system capable of removing particles greater than one micrometer in size from the fluid.

c. A magnifier capable of magnifying an object 1.5X to 30X its normal size (4 to 120 diopters) for observation of bubbles emanating from devices when immersed in the indicator fluid.

d. Sources of type I detector fluids and type II indicator fluids as specified in table 1071–II.

e. A lighting source capable of producing a collimated beam of at least 161,000 luxes (15,000 foot candles) in air at a distance equal to that which the most distant device in the bath will be from the source. The lighting source shall not require calibration, but shall be placed for best detection of bubbles, without excessive incident or reflective glare being directed toward observer.

f. Suitable calibrated instruments to indicate that test temperatures, pressures, and times are as specified.

g. Suitable fixtures to hold the device(s) in the indicator fluid.

TABLE 1071–II. Physical property requirements of perfluorocarbon fluids. 1/

Property	Type I	Type II	Type III	ASTM test method
Boiling point (°C)	50-95	140-200	50-110	D1120
Surface tension (dyness/cm) at +25°C		< 20		D971, D1331
Density at +25°C (gm/ml)	> 1.6	> 1.6	> 1.6	Not applicable
Density at +125°C (gm/ml)		> 1.5		Not applicable
Dielectric strength (volts/mil)	> 300	> 300	> 300	D877
Residue (Tgm/gm)	< 50	< 50	< 50	D2109
Appearance	Clear colorless			N/A

1/ Perfluorocarbons contain no chlorine or hydrogen.

Source: https://assist.dla.mil -- Downloaded: 2016-12-05T07:38Z
Check the source to verify that this is the current version before use.

6.2 Procedure. The devices shall be placed in a vacuum/pressure chamber and the pressure reduced to 0.0972 psia (670 Pa) or less and maintained for 30 minutes minimum, except for devices with an internal volume ≥ 0.1 cm^3 this vacuum cycle may be omitted. A sufficient amount of type I detector fluid shall be admitted to cover the devices. When the vacuum cycle is performed, the fluid will be admitted after the minimum 30 minute period but before breaking the vacuum. The devices shall then be pressurized in accordance with table 1071–III. When the pressurization period is complete, the pressure shall be released and the devices removed from the chamber without being removed from a bath of detector fluid for greater than 20 seconds. A holding bath may be another vessel or storage tank. When the devices are removed from the bath, they shall be dried for 2 minutes ±1 minute in air prior to immersion in type II indicator fluid, which shall be maintained at +125°C ±5°C. The devices shall be immersed with the uppermost portion at a minimum depth of 2 inches (50.80 mm) below the surface of the indicator fluid, one at a time or in such a configuration that a single bubble from a single device out of a group under observation may be clearly observed as to its occurrence and source. Devices with an internal cavity less than 0.05 cm^3 shall be tested in groups of no more than five devices at one time. Unless rejected earlier, the device shall be observed against a dull, non-reflective black background through the magnifier, while illuminated by the lighting source, from the instant of immersion until expiration of a 30 second minimum observation period.

TABLE 1071–III. Condition C and K pressurization conditions.

Pressure psia (minimum)	Minimum pressurization time (hour)	
	Condition C	Condition K
30	23.5	12
45	8	4
60	4	2
75	2	1
90	1	0.5
105	0.5	N/A

6.2.1 Failure criteria. A definite stream of bubbles, or two or more bubbles originating from the same point, after the devices have reached a minimum 2 inch (50.80 mm) depth in the fluid, shall be cause for rejection.

6.2.2 Precautions. The following precautions shall be observed in conducting the fluorocarbon gross leak test:

a. Perfluorocarbons fluids shall be filtered through a filter system capable of removing particles greater than one micrometer prior to use. Bulk filtering and storage is permissible. Liquid which has accumulated observable quantities of particulate matter during use shall be discarded or reclaimed by filtration for re-use. Precaution should be taken to prevent contamination.

b. Observation container shall be filled to assure coverage of the device to a minimum of 2 inches (50.80 mm).

c. Devices to be tested shall be free of foreign materials on the surface, including conformal coatings, and any markings which may contribute to erroneous test results.

d. Precaution should be taken to prevent operator injury due to package rupture or violent evolution of bomb fluid when testing large packages.

e. Packages with less than 0.05 cm^3 internal free volume shall be tested, with extremely careful observation.

Source: https://assist.dla.mil -- Downloaded: 2016-12-05T07:38Z
Check the source to verify that this is the current version before use.

f. Contamination of the fluid shall be tested weekly using a chemist "boiling chip". The chip shall be immersed into the fluid and any stream of bubbles indicates fluid contamination. Contamination is caused by solids, solvents and organics from the surface of devices, and from the accumulation of lower boiling point fluorocarbon fluids introduced from other test procedures.

NOTE: The fluid shall be changed when the boiling point falls outside the range as specified in table 1071–III.

7. Test condition D – bubble test (type II indicator fluid as specified in table 1071–II). (NOTE: These fluids replace ethylene glycol as a medium for the gross leak bubble test.) Packages with less than 0.01 cm^3 internal free volume shall be tested with extremely careful observation.

7.1 Apparatus. The apparatus required for test condition D shall be as follows:

a. Only devices with an internal free volume greater than 0.05 cm^3 can be tested by this method.

b. Container of sufficient volume to allow the devices to be covered with solution to a minimum depth of 2 inches (50.80 mm). The container shall have flat sides to minimize reflections and distortions (example of an acceptable container is a battery jar).

c. Liquid of sufficient volume maintained at no less than +125°C ±5°C for the duration of the test.

d. A light source capable of producing a collimated beam of at least 161,000 luxes (15,000 foot candles) in air at a distance equal to that which the most distant device in the bath will be from the source. The lighting source shall not require calibration.

7.2 Procedure. The devices shall be placed in the container of liquid at +125°C, immersed to a minimum depth of 2 inches (50.80 mm) for a minimum of 1 minute, and observed during the entire immersion period for bubbles or bubbling. Side lighting (see 7.1.d) shall be used to facilitate viewing the bubbles, and the devices shall be observed against a black nonreflective background.

7.2.1 Failure criteria. Any device that shows one or more nonreflective attached growing bubbles, one continuous stream, or a succession of two or more from the same point shall be considered a failure.

8. Test condition E, penetrant dye gross leak.

8.1 Apparatus. The apparatus required for test condition E shall be as follows:

a. Ultraviolet light source with peak radiation at approximately the frequency causing maximum reflection of the dye (3650Å for Zyglo; 4935Å for Flurosecein; 5560 Å for Rhodamine B).

b. Pressure chamber capable of maintaining 104 psia (719 kPa).

c. Solution of fluorescent dye, (such as Rhodamine B, Fluorescein, Dye-check, Zyglo, FL-50 or equivalent), mixed in accordance with the manufacturer's specification.

d. A magnifier capable of magnifying an object 1.5 to 30 times its nominal size (4 to 120 diopters).

8.2 Procedure. This test shall be permitted only on transparent glass encased devices or for destructive verification of opaque devices. The pressure chamber shall be filled with the dye solution to a depth sufficient to completely cover all the devices. The devices shall be placed in the solution and the chamber pressurized at 104 psia (719 kPa) minimum for 3 hour minimum. For device packages which will not withstand 105 psia (724 kPa), 60 psia (414 kPa) minimum for 10 hours may be used. The devices shall then be removed and carefully washed, using a suitable solvent for the dye used, followed by an air jet dry. Transparent devices may be examined under magnification capable of magnifying an object up to 1.5 times its normal size (4 diopters) using ultraviolet light source of appropriate frequency for evidence of the dye penetration. For the destructive examination of opaque devices, the devices shall be delidded and examined internally under the magnifier using an ultraviolet light source of appropriate frequency.

Source: https://assist.dla.mil -- Downloaded: 2016-12-05T07:38Z
Check the source to verify that this is the current version before use.

8.2.1 Failure criteria. Any evidence of dye in the cavity of the device shall constitute a failure.

8.2.1.1 Opaque devices. After de-lidding or separation of the device (as applicable), any evidence of dye penetration shall be cause for rejection. Area of examination shall be as shown on figures 1071–1 and 1071–2.

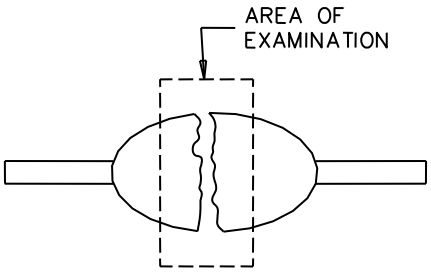

FIGURE 1071–1. Opaque construction.

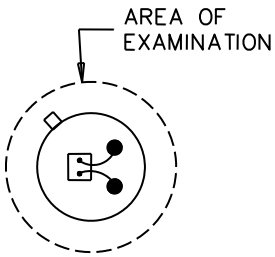

FIGURE 1071–2. Metal can construction.

8.2.1.2 Transparent glass, with large cavity (i.e. S bend, C bend, or straight-through constructions). Any evidence of dye penetration in the device cavity shall be cause for rejection. Area of examination shall be as shown on figure 1071–3.

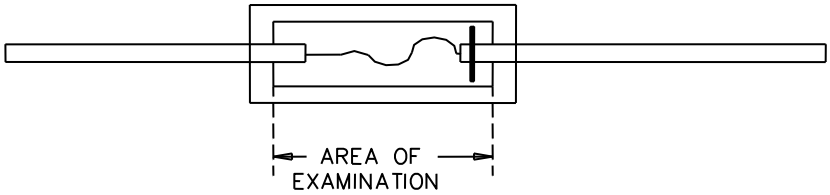

FIGURE 1071–3. Transparent glass or straight through construction.

8.2.1.3 Transparent glass, double plug construction (–1 and tungsten). Any evidence of dye penetration in the die area shall be cause for rejection. In addition, evidence of dye penetration into a crack, fracture, void, which is closer to the die than 50 percent of the designed seal length shall be rejected. Area of examination shall be as shown on figure 1071–4.

Source: https://assist.dla.mil -- Downloaded: 2016-12-05T07:38Z
Check the source to verify that this is the current version before use.

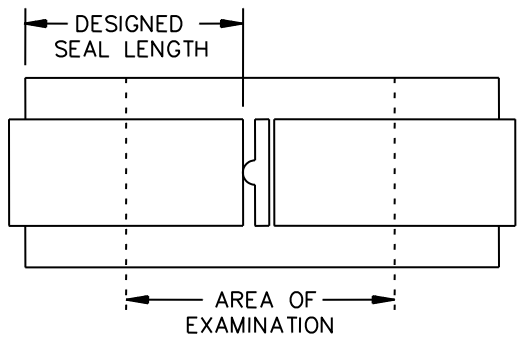

FIGURE 1071–4. Transparent glass double plug construction.

9. Test condition G_1 – radioisotope fine leak.

9.1 Apparatus. Apparatus for this test shall be as in 5.1.

9.2 Testing parameters. The bombing pressure and soak time shall be determined in accordance with the following equation:

Equation (1): $$Q_S = \frac{R}{SKT\overline{P}t}$$

The parameters of equation (1) are defined as follows:

Q_S = The maximum leak rate allowable, in atm cc/sec (Kr), for the devices to be tested. (This value is the equivalent ^{85}Kr measured leak rate equal to the allowable "L" value (atm cc/sec (air)) in 10.2.2).

R = Counts per minute above the ambient background after pressurization if the device leak rate were exactly equal to Q_S. This is the reject count above the background of both the counting equipment and the component, if it has been through prior radioactive leak tests.

S = The specific activity, in µCi per atm-cc, of the ^{85}Kr tracer gas in the pressurization system.

K = The overall counting efficiency of the scintillation crystal in counts per minute per microcurie of ^{85}Kr in the internal void of the specific component being evaluated. This factor depends upon component configuration and dimensions of the scintillation crystal. The counting efficiency shall be determined in accordance with 9.3.2.

T = Soak time, in hours, that the devices are to be pressurized.

Source: https://assist.dla.mil -- Downloaded: 2016-12-05T07:38Z
Check the source to verify that this is the current version before use.

P = $P_e2 – P_i2$, where P_e is the pressure in atmospheres absolute, and P_i is the original internal pressure of the devices in atmospheres absolute. The bombing pressure (P_e) may be established by specification or, if a convenient soak time (T) has been established, the pressure (P_e) can be adjusted to satisfy equation (1).

t = Conversion of hours to seconds and is equal to 3,600 seconds per hour.

NOTE: The complete version of equation (1) contains a factor ($P_O{}^2 – (\Delta P)^2$) in the numerator which is a correction factor for elevation above sea level. P_O is sea level pressure in atmospheres absolute and ΔP is the difference in pressure, in atmospheres between the actual pressure at the test station and sea level pressure. For the purpose of this test method, this factor has been dropped.

9.3 Determination of specific activity (S) and counting efficiency (K–factor).

9.3.1 Determination of specific activity of ^{85}Kr mixture.

a. The specific activity S is the concentration of the ^{85}Kr/air mixture in the radioisotope pressurization system. This concentration is measured in µCi per atm-cc/sec of ^{85}Kr/air mixture.

b. The specific activity must be maintained at 100 µCi per atm-cc/sec (minimum).

c. The specific activity must be determined at least monthly, either by gas sample or automatically by the equipment.

d. The specific activity must be measured at least semi-annually for high usage machines and annually for low usage machines, by sampling the gas following the manufacturer's procedure.

9.3.2 Determination of counting efficiency (K–factor). The counting efficiency K–factor of equation (1) shall be determined as follows:

a. A representative unit of the device type being tested shall have a known microcurie content of ^{85}Kr placed in the internal void of the device.

b. The counts per minute from the representative unit shall be measured in the shielded scintillation crystal of the counting station in exactly the same position as the actual samples will be measured. From this value, the counting efficiency, in counts per minute per microcurie (cpm per µCi), shall be calculated.

c. The K–factor, is the efficiency of measurement of radioactive ^{85}Kr tracer gas within a device using a scintillation crystal as a detector. The K–factor must be determined for the combination of both the scintillation crystal detection system that is to be used for the measurement and for the specific geometry of the device to be tested. This is done using a device 'sample' of the same geometric configuration as the device to be tested. The geometric center of the cavity, or its internal void, is the point called the "center of mass" of the radioactive gas being measured. The location of the center of mass is the point referred to for the k-factor of the device as it is positioned in each of the scintillation crystal detection systems described in 9.3.2.1, 9.3.2.2, and 9.3.2.3.

d. The equipment manufacturer may be able to provide K-factor data for most devices.

e. A list of K–factors for all devices shall be maintained for each crystal used.

Source: https://assist.dla.mil -- Downloaded: 2016-12-05T07:38Z
Check the source to verify that this is the current version before use.

9.3.2.1 K–factor for a scintillation "well–crystal".

a. A representative sample, consisting of a device with the same geometric configuration as the test sample device(s), shall be used to determine the K–factor. This representative sample shall have an accurately known micro-curie content of ^{85}Kr placed within its internal void.

b. The counts per minute from the representative sample shall be measured in the well of the shielded scintillation crystal of the counting station. The sample device should be in the exact position as test devices will be tested. If not, then the sample device shall be located at a height not to be exceeded by any device tested (see note below). From this measured value, the counting efficiency, in counts per micro-curie shall be calculated for that device/crystal system.

c. A scintillation “well crystal” shall have an efficiency of at least 10,000 cpm per µCi.

NOTE: The counting efficiency of the scintillation well crystal is reduced systematically at higher locations within the crystal’s well. The K–factor for the sample at the bottom of the well crystal will be the greatest. If a device is placed on top of other devices such as in testing multiple devices simultaneously, then the top device will have the least measured K–factor effect. Thus, the measured K–factor, determination using the sample device located other than at the bottom of the crystal’s well, determines the maximum height to be allowed for the actual test. This height shall be established and shall not be exceeded by any actual test device, including any one of the multiple devices being simultaneously tested.

9.3.2.2 K–factor for a scintillation "flat–top crystal".

a. A representative sample consisting of a device with the same geometric configuration as the test sample device(s) shall be used to determine the K–factor. This representative sample shall have an accurately known micro-curie content of ^{85}Kr placed in the internal void of the device.

b. The counts per minute from the representative sample shall be measured on the shielded scintillation crystal of the counting station. The sample must be in the exact position as the actual test devices will be tested. The K–factor for the sample shall be measured with the sample placed flat in a position centered to the main body of the crystal. Some flat-top crystals are solid cylinders of approximately 3 inches (76.2 mm) diameter, and the device sample is placed on the cylinder in the same manner, as mentioned. From this measured value, the counting efficiency, in counts per minute per micro-curie shall be calculated for that device/crystal system.

c. A "flat top" crystal should have a minimum sensitivity of 4,500 cpm per µCi.

9.3.2.3 Dynamic K–factor measurement with a scintillation-crystal.

a. A representative sample consisting of a device with the same geometric configuration as the test sample device(s) shall be used to determine the K–factor. This representative sample shall have an accurately known microcurie content of ^{85}Kr placed within its internal void.

b. A crystal, (or crystals), can be used for dynamic testing of devices passing over or through the crystal(s). This configuration is commonly used in high volume testing. The K–factor must be determined in the 'dynamic condition', which will establish a K–factor value, (usually less than in a static condition with the device standing at the center of the tunnel.) The representative sample is measured dynamically, as it passes through the crystal. This establishes the maximum reading achievable for the sample. From this measured value, the counting efficiency, in counts per minute per micro-curie shall be calculated. This K–factor determination is most commonly determined by the equipment manufacturer.

Source: https://assist.dla.mil -- Downloaded: 2016-12-05T07:38Z
Check the source to verify that this is the current version before use.

9.3.3 General. The K–factor for each geometric configuration is determined and used for testing. As a convenience, the same K–factor may apply to similar geometric configurations. This allows the same K–factor to be used for multiple devices, as long as the same test procedure and equipment is used, and the devices are measured using the same measurement system, (9.3.2, 9.3.2.1, 9.3.2.2, and 9.3.2.3).

It should be noted that state-of-the-art scintillation crystals are only capable of detecting (measuring) a maximum reading of 16,000 to 18,000 cpm from the emission from one microcurie of ^{85}Kr contained within the cavity of a device. Those values are limited by the total radiation emitted from ^{85}Kr; the mass of the sodium iodide crystal body; the physical proximity of the device to that crystal; and the materials of construction of the device. Most microcircuits and semiconductor devices have a K–factor of 14,000 to 16,000 cpm per µCi.

The efficiency of the counting station should be checked once every shift using a traceable ^{85}Kr reference sample. This is a functional test that assures the counting station is measuring within the tolerance of the scintillation crystal. Most "well-type" scintillation crystal will have an efficiency of 13,000 to 14,000 cpm per µCi. The reference standard should be corrected for half-life monthly and the measurements should be within ±10 percent of the established crystal efficiency.

9.4 Evaluation of surface sorption. All device encapsulations consisting of glass, metal, substrate and chip coatings, and ceramic or combinations thereof, that also include external coatings and external sealants or labels, shall be evaluated for surface sorption of ^{85}Kr before establishing the leak test parameters. Representative samples with the questionable surface material shall be subjected to the predetermined pressure and time conditions established for the device configuration as specified by 9.2. The samples shall then be measured at the counting station every 10 minutes, with count rates noted, until the count rate becomes asymptotic with time. (This is the point in time at which surface sorption is no longer a problem.) This time lapse shall be noted and shall determine the "wait time" specified in 9.5.

9.5 Procedure. The devices shall be placed in the radioactive tracer gas pressurization tank. The tank may be partially filled with inert material (aluminum filler blocks), to reduce machine cycle time and increase the efficiency of the system. The tank shall be evacuated to 66.7 Pa (0.5 torr). The devices shall be subjected to a minimum of 30 psia (207 kPa) of ^{85}Kr/air mixture for a minimum of 12 minutes. Actual pressure and soak time shall be determined in accordance with 9.2. The R value in counts per minute shall not be less than 500 above background.

The ^{85}Kr/air gas mixture shall be transferred to storage until 66.7 Pa (0.5 torr) pressure exists in the pressurization tank. The storage cycle shall be completed in 3 minutes maximum as measured from the end of the bombing cycle or from the time the tank pressure reaches 60 psia (414 kPa) if a higher bombing pressure is used. The tank shall then immediately be backfilled with air. The devices shall then be removed from the tank and measured with a scintillation-crystal-equipped counting station. Device encapsulations that come under the requirements of 9.4 shall be exposed to ambient air for a time not less than the "wait time" determined by 9.4. The time between removal from the pressurization chamber and test should be completed within one hour, for devices less than 0.5 cm^3, or within three hours, for devices greater than 0.5 cm^3. Device encapsulations that do not come under the requirements of 9.4 may be tested without a "wait time".

If the devices are tested in the well-crystal with the crystal-well shielded with a lead-plug while measuring the device, and a background of approximately 500 cpm is achievable when the Ratemeter is in the "slow-time-constant" position; then reject values R of a minimum of 250 cpm (net) above background while using a lead plug, may be measured for rejection of devices in high sensitivity testing. The counting station calibration must be checked at least once every shift using a ^{85}Kr reference standard following equipment manufacturer's procedure, and a record of proper function shall be maintained.

The actual leak rate of the component shall be calculated with the following equation:

Equation (2): $$Q = \frac{(Actual\ readout\ in\ net\ counts\ per\ minute) \times Q_S}{R}$$

Where Q = actual leak rate in atm-cc/sec, and Q_S and R are defined in 9.2.

Source: https://assist.dla.mil -- Downloaded: 2016-12-05T07:38Z
Check the source to verify that this is the current version before use.

9.5.1 Failure criteria. Unless otherwise specified, devices that exhibit a leak rate equal to or greater than the test limits of table 1071–IV shall be considered as failures. These limits are the ^{85}Kr equivalents for the air leak rates that are needed to provide a minimum exchange with atmosphere in 1 year.

TABLE 1071–IV. Test limits for radioisotope fine leak method.

Volume of package cm^3	Failure criteria for L atm-cc/sec (air)	^{85}Kr reject level Q_s atm-cc/sec (Kr)
≤ 0.002	5×10^{-10}	2.9×10^{-10}
>0.002 ≤ 0.02	1×10^{-9}	5.8×10^{-10}
>0.02 ≤ 0.5	5×10^{-9}	2.9×10^{-9}
> 0.5	1×10^{-8}	5.8×10^{-9}

9.5.2 Quantitative (read and record) leak rate procedure. Devices subjected to the radioisotope fine leak procedure can be measured quantitatively for accurate leak rates following the procedure in 9.5. This procedure is usually applied to devices with internal cavities greater than 0.1 cm^3, with leak rates less than 10^{-6} atm-cc/sec (air). Special techniques must be followed for devices with external organic materials. The shielding plug shall be placed over the scintillation crystal and the background reading determined for the crystal. The devices are then measured at the scintillation crystal counting station using the “slow-time-constant” on the Ratemeter. The devices are then measured one device at a time, reading the counts per minute very carefully with the shielding plug placed over the opening of the crystal to minimize the environmental background radiation. The ‘net’ counts per minute reading is determined for the DUT by subtracting the background reading from the reading of the DUT. The counting station calibration must be checked at least once every shift using a ^{85}Kr reference standard following equipment manufacturer's procedure" and a record of proper function maintained.

The reading in cpm must be verified as stable. The device must be measured for surface beta reading to assure that there is no external ^{85}Kr gas absorbed onto the part. If surface beta readings are found, the device must be placed in vacuum for 5 minute intervals (for devices with greater than 0.5 cm^3 internal volumes), or, (for devices with less than 0.5 cm^3 internal volume), allowed to stand in ambient atmosphere until the Beta readings dissipate. The ^{85}Kr readings must remain stable for 24 hours for devices with greater than 0.5 cm^3 internal volumes, and for at least 4 hours for devices with less than 0.5 cm^3 internal volumes.

The quantitative leak rate of the device, Q, shall be calculated as follows, (using Equation (2):

$$Q = \frac{\text{(Net reading of DUT in counts per minute)}}{\text{"R"}} \times Q_s = \text{leak rate atm-cc/sec (Kr)}$$

The quantitative leak rate Q shall be converted to the equivalent atm-cc/sec (air) leak rate by multiplying the Q leak rate by a factor of 1.712.

NOTE 1: The exact internal volume of the device and the date code, if the device is to be subjected to further studies such as IGA.

NOTE 2: The history of the prior tests to which the device may have been subjected, i.e. fluorocarbon bubble tests, etc. (as the fluorocarbon fluid will skew the measured leak rate.

NOTE 3: When a group of the same lot of devices has been subjected to this procedure, it is suggested that at least one of the devices be subjected to 24 hours in vacuum with periodic readings taken to verify the slope of the loss of ^{85}Kr gas from the device. Those readings should show a linear ^{85}Kr loss for a molecular flow fine leak, unless the device has been previously subjected to fluorocarbon fluids. A non-linear slope also indicates that the measured leak rate is probably greater than measured.

Source: https://assist.dla.mil -- Downloaded: 2016-12-05T07:38Z
Check the source to verify that this is the current version before use.

9.6 Test conditions G_1 and G_2 – radioisotope gross/fine combination.

9.6.1 Apparatus. The apparatus required for test conditions G_1 and G_2 shall be in accordance with 5.1.

9.6.2 Testing parameters. The bombing pressure and soak time shall be in accordance with 9.2.

9.6.3 Determination of counting efficiency (K–factor). The determination of counting efficiency K–factor shall be in accordance with 9.3.

9.6.4 Evaluation of surface sorption. The evaluation of surface sorption shall be in accordance with 9.4.

9.6.5 Procedure G_1/G_2 combination gross/fine test. The devices shall be placed in a radioactive gas pressurization chamber. The pressurization chamber shall be filled with inert material (aluminum filler blocks), to reduce cycle time and make the test more efficient. The chamber shall be evacuated to 66.7 Pa (0.5 torr). The devices shall be subjected to a minimum of 30 psia (207 kPa) of ^{85}Kr/air mixture for a minimum of 12 minutes. Actual pressure and soak time for G_1 shall be in accordance with 9.5. The R value in counts per minute shall not be less than 500 cpm above background. When the soak time is completed the ^{85}Kr/air mixture shall be transferred to storage until 266.6 Pa (2.0 torr) pressure exists in the pressurization chamber. The storage cycle shall be completed in 3 minutes as measured from the end of the pressurization cycle or from the time the tank pressure reaches 60 psia, (if a higher pressure was used). The tank shall then be backfilled with air. The devices shall immediately be removed from the tank and measured at the counting station within 10 minutes after removal from the tank. Devices that come under the conditions of 9.6.4 and require a "wait time", cannot be subjected to the gross/fine combination test. Those devices must be subjected to G_1 and G_2 separately. The counting station calibration must be checked at least once every shift using a ^{85}Kr reference standard following equipment manufacturer's procedure, and a record of proper function shall be maintained.

10. Test condition H_1 or H_2 tracer gas (He) fine leak and CH_1 or CH_2 combined fine/gross leak. Test condition H_1 is a fixed method with specified conditions in accordance with table 1071–V that will ensure the required test sensitivity L in atm-cc/sec (air) is achieved. This required test sensitivity L will result in a mass spectrometer measurement of R_1 in atm-cc/sec (He). Test condition H_2 is a flexible method that allows the variance of test conditions in accordance with the formula of 10.2.1.2 to detect the required equivalent standard leak rate L as the measured leak rate R_1. Test conditions H_1 and H_2 are for fine leak testing only.

NOTE: Table 1071–V is derived from Equation 3, paragraph 10.2.1.2, using failure criteria L of paragraph 10.2.2.

10.1 Apparatus. The apparatus required for test conditions H_1, H_2, CH_1, and CH_2 shall be as follows:

a. Suitable pressure and vacuum chambers and a mass spectrometer-type leak detector properly calibrated for a helium leak rate sensitivity sufficient to read measured helium leak rates of one third the measured R_1 value. The volume of the chamber used for leak rate measurement should be held to the minimum practical, since this chamber volume has an adverse effect on sensitivity limits.

b. The leak detector indicator shall be calibrated using a diffusion-type calibrated standard leak at least once every working shift.

c. The calibration standard shall have a calibration value at least equal to or less than the leak rate measurement value R_1 for the equivalent standard leak rate L value required.

d. In addition, the test apparatus for CH_1 and CH_2 shall utilize a specialized pumping system which enables the volume of helium released to be measured as well as the rate of change or "slope" of the helium such that the leak rate is determined from the slope measurement for fine leaks and the volume for gross leaks.

Source: https://assist.dla.mil -- Downloaded: 2016-12-05T07:38Z
Check the source to verify that this is the current version before use.

10.2 Procedure applicable to "fixed" and "flexible" methods. The completed devices(s) shall be placed in a sealed chamber which is first evacuated to a maximum pressure of 25 inches of Hg (635 mm of Hg) and then pressurized with a tracer gas of 100 +0, –5 percent helium for the required time and pressure. (The evacuation pressure, if used, shall be documented). The pressure shall then be relieved (an optional air nitrogen wash may be applied except for CH_1 and CH_2 where a dry air wash or other technique to reduce the effects of surface adsorption as specified in 10.2.1 can be used) and each specimen transferred to another chamber, or chambers, which are connected to the evacuating system and a mass-spectrometer-type leak detector. When the chamber(s) is evacuated, any tracer gas which was previously forced into the specimen will thus be drawn out and indicated by the leak detector as a measured leak rate (R_1). (The number of devices removed from pressurization for leak testing shall be limited such that the test of the last device can be completed within 60 minutes for test condition H_1 or CH_1 or within the chosen value of dwell time t_2 for test condition H_2 or CH_2). Devices with cavities less than 0.05 cm^3 shall be tested within 30 minutes after removal from pressurization for H_1, H_2 and within the dwell time selected for CH_1 and CH_2.

NOTE: The helium absorption will be much more severe with the extended bomb times required to achieve the tightened sensitivities called for in this test method. It must also be noted that the determination of surface sorption on individual devices shall preclude the ‘batch-testing’ of that specific type of device. The surface sorption must be established for every package type before testing. At the higher sensitivity testing this surface sorption can vary with each batch of package material.

10.2.1 Evaluation of surface sorption. All device encapsulations consisting of glass, metal, and ceramic, or combinations thereof, including coatings and external sealants, shall be evaluated for surface sorption of the leak test fluid (such as helium) before establishing the leak test procedures and parameters. Representative specimens of the questionable devices should be opened and all parts of each device as a unit shall be subjected to the predetermined pressure and time conditions established for the device configuration as specified in table 1071–V and 10.2.1.2. The measured leak rate for each device shall be monitored and the lapsed time shall be determined for the indicated leak rate to fall to less than or equal to 0.5 R_1 as specified in table 1071–V for test condition H_1 or as predetermined for test condition H_2. The average of the lapsed time following the release of pressure will determine the minimum usable dwell time. Note that the sensitivity of measurement increases as this background indicated leak rate decreases relative to the R_1 reject level. Alternately, whole (unopened) specimens of the questionable devices shall be subjected to the same process; then, the shorted value of lapsed time so obtained will determine the minimum dwell time. The fixed method will not be used if the consequent dwell time exceeds the value specified in table 1071–V. It is noted that sorption may vary with pressure and time of exposure so that some trial may be required before satisfactory exposure values are obtained. The data for the surface sorption measurement and the "wait-time" shall be recorded for each device tested in this method. (See 17.)

10.2.1.1 Test condition H_1 and CH_1 "fixed" method. The device(s) shall be tested using the appropriate conditions specified in table 1071–V for the internal cavity volumes of the package under test. Time t_1 is the time under pressure and time t_2 is the maximum time allowed after the release of pressure before the device shall be read. The fixed method shall not be used if the maximum standard leak rate limit given in the performance specification sheet is less than the limits specified herein for the flexible method.

NOTE: The leak test limits specified in the fixed table are showing the limits achievable for conventional HMS systems, but with extended bomb times. This table also provides the bomb times required to give a signal at, or above, the background of the conventional helium mass spectrometers.

Source: https://assist.dla.mil -- Downloaded: 2016-12-05T07:38Z
Check the source to verify that this is the current version before use.

TABLE 1071–V. Fixed conditions for test condition H_1 and CH_1. 1/ 2/

Volume of package		Bombing conditions			Failure criteria	Mass spec.
Min volume of package (cc)	Max volume of package (cc)	Bomb pressure +2 psia (138 kPa) psia (kPa)	Min bomb time "t_1" (hrs)	Max dwell time "t_2" (hrs)	Air leak spec "L" (atm-cc/sec)	Reading (He) reject limit "R_1" (atm-cc/sec)
> 0	≤ 0.002	75 (518)	20	0.5	5.0E-10	3.2E-10
> 0	≤ 0.002	90 (620)	394	0.5	5.0E-10	5.0E-09
> 0.002	≤ 0.02	75 (518)	20	0.5	1.0E-09	2.6E-10
≤ 0.002	≤ 0.02	90 (620)	379	0.5	1.0E-09	5.0E-09
> 0.02	≤ 0.03	75 (518)	20	0.5	5.0E-09	2.1E-09
≤ 0.02	≤ 0.03	90 (620)	39	0.5	5.0E-09	5.0E-09
> 0.03	≤ 0.05	75 (518)	20	1	5.0E-09	1.3E-09
≤ 0.03	≤ 0.05	90 (620)	66	1	5.0E-09	5.0E-09
> 0.05	≤ 0.075	75 (518)	20	1	5.0E-09	8.7E-10
≤ 0.05	≤ 0.075	90 (620)	98	1	5.0E-09	5.0E-09
> 0.075	≤ 0.1	75 (518)	5	1	5.0E-09	1.6E-10
≤ 0.075	≤ 0.1	90 (620)	131	1	5.0E-09	5.0E-09
> 0.1	≤ 0.5	75 (518)	5	1	5.0E-09	3.3E-11
≤ 0.1	≤ 0.5	90 (620)	655	1	5.0E-09	5.0E-09
> 0.5	≤ 0.75	75 (518)	5	1	1.0E-08	8.7E-11
≤ 0.5	≤ 0.75	90 (620)	242	1	1.0E-08	5.0E-09
> 0.75	≤ 1	75 (518)	5	1	1.0E-08	6.6E-11
≤ 0.75	≤ 1	90 (620)	323	1	1.0E-08	5.0E-09
> 1	≤ 1.5	75 (518)	5	1	1.0E-08	4.4E-11
≤ 1	≤ 1.5	90 (620)	484	1	1.0E-08	5.0E-09
> 1.5	≤ 5	75 (518)	5	1	1.0E-08	1.3E-11
≤ 1.5	≤ 5	90 (620)	1613	1	1.0E-08	5.0E-09
> 5	≤ 10	75 (518)	10	1	1.0E-08	1.3E-11
≤ 5	≤ 10	90 (620)	3225	1	1.0E-08	5.0E-09
> 10	≤ 20	75 (518)	10	1	1.0E-08	6.6E-12
≤ 10	≤ 20	90 (620)	6450	1	1.0E-08	5.0E-09

1/ Dwell times (t_2): One (1) hour maximum for all devices with cavities greater than 0.05 cm^3, and 30 minutes for devices with cavities less than 0.05 cm^3.

2/ These values were derived using equation 3 for air and equation 3a for helium.

Source: https://assist.dla.mil -- Downloaded: 2016-12-05T07:38Z
Check the source to verify that this is the current version before use.

10.2.1.2 Test conditions H_2 and CH_2 flexible method. Based on the specified L value required for the device, (see 10.2.2), the values for bomb pressure, exposure time, and dwell time shall be chosen such that actual measured tracer gas readings R_1 obtained for the DUTs (if defective) will be one order of magnitude greater than the minimum detectable leak rate measurability of a mass spectrometer (background reading) during the measurement process (this is required to assure detection of a leaking device with a reading easily distinguished above the HMS background value.). The devices shall be subjected to a minimum of 29 psia (200 kPa) of helium atmosphere. The chosen values of pressurization and time of pressurization, in conjunction with the value of the internal volume of the device package to be tested, and the maximum equivalent standard leak rate L required for the device as specified in 10.2.2, shall be used to calculate the measured leak rate (R_1) limit using the following formula:

Equation (3):

$$R_1 = \frac{2.69\,L\,P_e}{P_o}\left[1 - \exp - \left(\frac{2.69\,L}{P_o V} \bullet t_1\right)\right] \exp - \left(\frac{2.69\,L}{P_o V} \bullet t_2\right) \qquad (3)$$

Equation (3a): Any other tracer gas besides helium (He):

$$R_1 = \frac{\sqrt{\frac{Ma}{M}}\,L\,P_e}{P_o}\left[1 - \exp - \left(\frac{\sqrt{\frac{Ma}{M}}\,L}{P_o V} \bullet t_1\right)\right] \exp - \left(\frac{\sqrt{\frac{Ma}{M}}\,L}{P_o V} \bullet t_2\right) \qquad (3a)$$

Where: R_1 = The measurement of tracer gas (He) as measured on the mass spectrometer in atm-cc/sec (He). This value is not the actual leak rate of the device (see 10.2.1.1 and 10.2.1.2). It is the HMS reading resulting from the amount of helium within the DUT.

L = The equivalent standard leak rate in atm-cc/sec (air). This is the specified leak rate limit for the device, in atm-cc/sec (air) (see 10.2.1.2).

P_e = The pressure of exposure in atmospheres absolute.

P_o = 1 standard atmosphere.

t_1 = The time of exposure to P_e in seconds.

t_2 = The dwell time between release of pressure and leak measurement in seconds.

V = The internal volume of the device package cavity in cubic centimeters.

M_A = The molecular weight of ambient gas. (e.g. air = 28.7)

M = The molecular weight of the tracer gas (e.g. helium = 4, neon = 20.2, argon = 40, nitrogen = 28).

Source: https://assist.dla.mil -- Downloaded: 2016-12-05T07:38Z
Check the source to verify that this is the current version before use.

The minimum detectable leak rate shall be determined as in 10.2.1 and shall be taken as the indicated value corresponding to a lapsed time $t_0 < t_2$. The lapsed time t_0 shall be taken as the minimum usable dwell time, and leak testing shall be accomplished in the interval between t_0 and t_2. Alternately, pressurization parameters may be chosen from the fine leak approximate solution of equation (3) for $L < 1 \times 10^{-5}$ atm-cc/sec (air) as:

Equation (4):

$$L = \frac{P_o}{2.69}\left(\frac{R_1 V}{P_e t_1}\right)^{1/2}$$

with a graphical representation given on figure 1071–5. If chosen dwell time t_2 is greater than 60 minutes, equation (3) shall be used to determine an R_1 value which will assure a maximum detectable standard leak rate large enough to overlap with the selected gross leak test condition. Alternately, the largest detectable leak rate L_{max} as a function of dwell time may be obtained from the approximate solution:

Equation (5):

$$L\max = \frac{P_o V}{2.69\, t_2}\; 1n\left(\frac{2.69\, L\, P_e}{P_o\, R_1}\right)$$

with graphical representation given on figure 1071–6. In each case (equations (4) and (5)) R_1 shall be taken large compared to the minimum detectable value.

10.2.1.3 Package volume and leak rate limits for CH_1 and CH_2. For test methods CH_1, the minimum size package is determined by the ability of the apparatus to effectively detect a gross leak one hour after the device has been removed from the trace gas pressurization chamber with a signal to noise (background) ratio of at least three to one. It may be necessary to use a shorter test interval if the apparatus has a high background level of helium or the surface absorption of the device is high. A reasonable lower limit would be 0.0005 cm^3. The only limit on maximum size is the size of the test chamber to accommodate the DUT. A gross leak is defined as a device with a measured leak rate greater than 5×10^{-6} atm-cc/sec (air). Very small packages may be stored in an atmosphere containing at least 10 percent helium after bombing to insure adequate signal to noise ratio for the gross leak test over the one hour test interval. Please note that for test method CH_2, the dwell time chosen should be less than 60 minutes or a 10 percent helium storage container shall be used to store the device from the time it is removed from the pressurization chamber to when it is inserted into the test apparatus. The demonstrated minimum detectable leak rate for this test method is 3×10^{-14} atm-cc/sec (air), however, the design of the apparatus can increase or decrease this limit.

NOTE: From ASTM F134 "Standard Test Methods for Determining Hermeticity of Electron Devices with a Helium Mass Spectrometer Leak Detector".

10.2.2 Failure criteria. Unless otherwise specified, devices with an internal cavity volume of 0.002 cm^3 or less shall not be accepted if the equivalent standard leak rate L exceeds 5×10^{-10} atm-cc/sec (air). Devices with an internal cavity volume greater than 0.002 cm^3, and equal to or less than 0.02 cm^3, shall not be accepted if the equivalent standard leak rate L exceeds 1×10^{-9} atm-cc/sec (air). Devices with an internal cavity volume greater than 0.02 cm^3, and equal to or less than 0.5 cm^3, shall not be accepted if the equivalent standard leak rate L exceeds 5×10^{-9} atm-cc/sec (air). Devices with an internal cavity volume greater than 0.5 cm^3 shall not be accepted if the equivalent standard leak rate L exceeds 1×10^{-8} atm-cc/sec (air).

Source: https://assist.dla.mil -- Downloaded: 2016-12-05T07:38Z
Check the source to verify that this is the current version before use.

11. Test condition J – weight gain gross leak.

11.1 Apparatus. The apparatus required for test condition J shall be as follows:

a. A vacuum/pressure chamber for the evacuation and subsequent pressure bombing of devices up to 90 psia (620 kPa) for up to 10 hours.

b. An analytical balance capable of weighing the devices accurately to 0.1 milligram.

c. A source of type III detector fluid as specified in table 1071–II.

d. A filtration system capable of removing particles greater than one micrometer in size from the fluid.

e. Suitable calibrated instruments to measure test pressures and time.

f. A suitable solvent.

11.2 Procedure. The devices shall be cleaned by placing them in a container of a suitable solvent at +25°C and allowed then to soak for 2 minutes minimum. After the devices are removed from the solution, they shall be baked in an oven at +125°C ±5°C for 1 hour minimum, after which they shall be allowed to cool to room ambient temperature. Each device shall be weighed and the initial weight recorded, or the devices may be categorized into cells as follows: Devices having a volume less than or equal to 0.01 cm^3 shall be categorized in cells of 0.5 milligram increments and devices with volumes greater than 0.01 cm^3 shall be categorized in cells of 1.0 milligram increments. The devices shall be placed in a vacuum/pressure chamber and the pressure reduced to 0.0967 psia (667 Pa) and maintained for 1 hour except that for devices with an internal cavity volume greater than or equal to 0.1 cm^3, this vacuum cycle may be omitted. A sufficient amount of type III detector fluorocarbon fluid shall be admitted to the pressure chamber to cover the devices. When the vacuum cycle is performed, the fluid shall be admitted after the 1 hour period but before breaking the vacuum. The devices shall then be pressurized to 75 psia (517 kPa) except that 90 psia (620 kPa) shall be used when the vacuum has been omitted. The pressure shall be maintained for two hours minimum. If the devices will not withstand the 75 psia (517 kPa) test pressure, the pressure may be lowered to 45 psia (310 kPa) with the vacuum cycle and pressure maintained for 10 hours minimum. Upon completion of the pressurization period, the pressure shall be released and the devices removed from the pressure chamber and retained in a bath of the fluorocarbon fluid. When the devices are removed from the fluid they shall be air dried for 2 minutes ±1 minute prior to weighing. The devices shall be transferred singly to the balance and the weight, or weight category, of each device determined. All devices shall be tested within 4 minutes following removal from the fluid. The delta weight shall be calculated from the record of the initial weight and the post weight of the device. Devices which were categorized shall be separated into two groups, one of which shall be the devices which shifted one cell or less, and the other devices which shifted more than one cell.

11.3 Failure criteria. A device shall be rejected if it gains 1.0 milligram or more and has an internal volume greater than or equal to 0.01 cm^3, and 2.0 milligrams or more if the volume is less than 0.01 cm^3. If the devices are categorized, any device which gains enough weight to cause the device to shift by more than one cell shall be considered a reject. A device which loses weight of an amount which, if gained, would cause the device to be rejected may be retested after it is baked at +125°C ±5°C for a period of 8 hours minimum.

Source: https://assist.dla.mil -- Downloaded: 2016-12-05T07:38Z
Check the source to verify that this is the current version before use.

12. Test condition K – fluorocarbon vapor detection.

12.1 Apparatus. The apparatus required for test condition K shall be as follows:

a. A vacuum/pressure chamber for the evacuation and subsequent pressure bombing of devices up to 90 psia (620 kPa) for up to 12 hours.

b. A fluorocarbon vapor detection system capable of detecting vapor quantities equivalent to 0.28 milligram of type I fluid.

c. A source of type I detector fluid specified in table 1071–II.

d. Suitable calibrated instruments to indicate that test, purge times, and temperatures are as specified. The detection system shall be calibrated at least once each shift when production occurs by introducing 1 microliter of type I detector fluid into the test chamber. The resulting reading shall be adjusted in accordance with the manufacturer's instructions.

e. The vapor detector used for condition K shall be calibrated at least once each working shift using a type I fluid calibration source, and following the manufacturer's instructions.

12.2 Procedure. The devices shall be placed in a vacuum/pressure chamber and the pressure reduced to 667 Pa (5 torr) or less and maintained for 30 minutes minimum. A sufficient amount of type I detector fluid shall be admitted to the pressure chamber to cover the devices. The fluid shall be admitted after the 30 minute vacuum period but before breaking the vacuum. The devices shall then be pressurized and maintained in accordance with table 1071–III. Upon completion of the pressurization period, the pressure shall be released, the devices removed from the pressure chamber without being removed from the detector fluid for more than 20 seconds, and then retained in a bath of fluorocarbon fluid. When the devices are removed from the fluid they shall be air dried for a minimum of 20 seconds and a maximum of 5 minutes prior to the test cycle. If the type I detector fluid has a boiling point of less than +80°C, the maximum drying time shall be 3 minutes. The devices shall then be tested with a fluorocarbon vapor detection system that is calibrated in accordance with 12.1. The purge time shall be in accordance with table 1071–VI. Test time shall be a minimum of 3.5 seconds unless the device is rejected earlier. The system's purge and test chambers shall be at a temperature of +125°C ±5°C. Test time shall be 2.5 seconds minimum with the purge and test chambers at a temperature of +150°C ±5°C.

NOTE: Test temperature shall be measured at the chamber surface that is in contact with the DUT.

12.3 Failure criteria. A device shall be rejected if the detector instrumentation indicates more than the equivalent of 0.28 milligrams of type I detector fluid in accordance with table 1071–II.

TABLE 1071–VI. Purge time.

Package with internal free volume (cm^3)	Purge time at +125°C ±5°C (seconds)
≤ 0.01	≤ 5
≥ 0.01 ≤ 0.10	≤ 9
≥ 0.1	≤ 13

NOTE: Purge time shall be defined as the total time the device is heated prior to entering the test mode. Maximum purge time can be determined by cycling a device with a .02 inch to .05 inch (0.51 mm to 1.27 mm) hole and measuring the maximum purge time that can be used without permitting the device to escape detection.

Source: https://assist.dla.mil -- Downloaded: 2016-12-05T07:38Z
Check the source to verify that this is the current version before use.

13. Test conditions L_1 or L_2 – optical gross leak and combined fine/gross leak. (These procedures need correlation data to substantiate the test conditions.)

13.1 Apparatus. The apparatus required for test conditions L_1 or L_2 shall be as follows:

a. A laser interferometer to measure submicron lid deflection of one or more devices in response to a pressure change.

b. A chamber to provide a controlled pressure of up to 5 atmospheres (75 psig) in a helium environment) in a helium environment.

c. A means of measuring and inducing a small controlled pressure change and electronically calibrating the induced pressure change to lid deflection for each device simultaneously in order to determine the lid stiffness in microns per psi or equivalent units for each device.

d. A means of tracking the lid movement of each device simultaneously over time.

e. Processing electronics capable of using the measured lid position at the beginning and end of the test and the calibrated stiffness (c) to determine the change in internal pressure of the device. This change in internal pressure along with cavity volume and test duration is used to obtain true helium leak rates, L(He).

Leak rate is determined by the change in internal pressure of the package of a known internal free volume over a known period of time.

When this is normalized to one atmosphere pressure then divided by the test duration and multiplied by the package volume, L(He) in atm-cc/sec is determined. The true leak rate, L(air), is determined by applying the molecular conversion 2.69 X L(He). This is a direct measurement of leak rate.

These test conditions are valid for lidded devices constructed of metallic, ceramic or other materials which result in measurable deflection of the lid over time.

13.1.1 Leak rate. The optical leak test shall be performed with a test pressure, P, and time, t, which will provide the leak rate sensitivity required. The leak rate is provided by the following equation:

$$L = (-V / K T) \times \ln (1 - D / P L_0)$$

Where:

L = The leak rate of the test (atm-cc/sec).

V = The volume of the package cavity (cm^3).

K = The leak test gas constant (air = 1.0, He = 2.69)

T = The test duration time (seconds).

D = The measured deflection of the package lid (microns).

P = The chamber pressure during the test (psig).

L_0 = The measured lid stiffness (microns/psi).

Note: L_0 is measured for each package during the test.

Source: https://assist.dla.mil -- Downloaded: 2016-12-05T07:38Z
Check the source to verify that this is the current version before use.

13.2.1 Controlling sensitivity by controlling test time and pressure. As stated above, for a specific package lid thickness, and volume V, the leak rate sensitivity L, is increased by increasing the test time t and chamber pressure P.

13.3 Test condition L_1 – optical gross leak. This test shall be performed in conjunction with optical fine leak L_2. The completed device(s) shall be placed in the sealed test chamber. The optical interferometer shall be set to observe the package lid(s). The chamber shall then be pressurized or evacuated while the deflection of the lid(s) is being observed with the optical interferometer. The deflection of the lid(s) with the pressure change, and/or the lack of continued deflection of the lid(s) with the pressure P held for time t (or equivalent procedure), will be observed for each package in the field of view simultaneously.

13.3.1 Failure criteria. A device shall be rejected as a gross leak for any of the following criteria:

a. If the optical interferometer did not detect deflection of the lid as the chamber pressure was changed.

b. If the interferometer detects the deflection of the lid resulting in a leak rate L greater than the predetermined limit for gross leak or equivalent procedure.

13.4 Test condition L_2 – optical fine leak. This test may be performed in conjunction with optical gross leak L_1. The completed device(s) shall be placed in the sealed test chamber. An optical interferometer is set to observe the package lid(s). The sealed test chamber is then pressurized with helium gas or evacuated to a test pressure no higher than the maximum design pressure as determined by the package manufacturer or the design limit of the chamber, which ever is less. For the duration of the test, the chamber pressure is modulated sufficiently to obtain lid stiffness calibration for each device. The deflection of the lid(s) is measured with the optical interferometer. The deflection of the lid(s), with the pressure change for time t (or equivalent procedure), is measured for each package in the field of view simultaneously.

13.4.1 Failure criteria. The failure criteria for optical fine leak method L_2 shall be in accordance with table 1071–VII.

TABLE 1071–VII. Failure criteria for optical fine leak method L_2.

Vol. of package cm^3	Failure criteria L atm-cc/sec (air)	Reject level "L_2" atm-cc/sec (He)
≤ 0.002	5×10^{-10}	1.37×10^{-9}
>0.002 ≤ 0.02	1×10^{-9}	2.74×10^{-9}
>0.02 ≤ 0.5	5×10^{-9}	1.37×10^{-8}
> 0.5	1×10^{-8}	2.75×10^{-8}

Source: https://assist.dla.mil -- Downloaded: 2016-12-05T07:38Z
Check the source to verify that this is the current version before use.

14. Test condition G_t – radioisotope thermal leak test. This test is for the evaluation of package hermetic integrity at elevated temperature. It is intended to verify that the package structural design will maintain hermetic integrity at elevated temperatures. Devices to be evaluated in this thermal leak test shall be packages that should not have not been subjected to any prior liquid immersion testing. The devices to be tested for thermal leakage shall first be subjected to test condition A, B, or G_2 to at least the sensitivity requirement for that package in the standard, and the hermeticity to that sensitivity, establishing the package is hermetic at ambient temperature.

14.1 Apparatus. The apparatus required for test condition G_t shall be as follows:

a. Radioactive tracer gas pressurization console containing ^{85}Kr/air mixture. A ^{85}Kr pressure/vacuum thermal test chamber capable of evacuation and pressurization at temperatures to 125ºC, and thermal cycling from ambient temperature to 125ºC while maintaining ^{85}Kr/air pressure.

b. Counting station with a minimum sensitivity of 5,000 cpm per µCi of ^{85}Kr tracer gas and a minimum detectable count rate of 500 cpm above background level. The counting station calibration shall be checked at least once every working shift using a ^{85}Kr reference standard following the equipment manufacturer's procedure, and a record of proper function shall be maintained.

c. A tracer gas consisting of a mixture of ^{85}Kr and air. The concentration of ^{85}Kr in air shall be no less than 100 µCi per atm-cc/sec. This value shall be determined at least once each 30 days, following manufacturer's procedure, and recorded in accordance with the calibration requirements of the general test method standard MIL–STD–750.

14.2 Testing parameters. Prior to performing this test condition, the devices shall be pre-tested to the sensitivity of the standard following the radioisotope procedure A and B, or G_2, radioisotope gross/fine test. The bombing pressure and soak time for the pre-test shall be established for the package following 9.2.

14.3 Determination of counting efficiency (K). The determination of K-factor shall be in accordance with 9.2.

14.4 Evaluation of surface sorption. The evaluation of surface sorption shall be in accordance with 9.4.

14.5 Procedure. The devices shall be placed in the radioactive tracer gas thermal-pressurization chamber. The tank shall be evacuated to 66.7 Pa (0.5 torr) . The devices shall be subjected to a pressure of ^{85}Kr/air mixture at a pressure of 60 psia (414 kPa) (typical), or a minimum of 30 psia (207 kPa) (dependent upon the structural compatibility of the package).

14.5.1 Thermal test. The devices are placed in the thermal/pressure chamber and pressurized with ^{85}Kr/air mixture to the pressure established in 14.5. The chamber is then heated to 100ºC ±10ºC minimum to 125ºC ±10ºC maximum, and maintained at the elevated temperature for 10 minutes minimum. The temperature is then returned to ambient, at which time the ^{85}Kr is returned to storage and the devices are removed from the thermal/pressure chamber and measured at the scintillation crystal detection station for any ^{85}Kr gas trapped within the devices. Device encapsulations that come under the requirements of 9.4 shall be exposed to ambient air for a time not less than the "wait time" determined by 9.4. In no case will the time between removal from the pressurization chamber and measurement exceed 60 minutes. Any device containing measurable ^{85}Kr gas is a thermal-reject. This test is frequently applied to devices that have indicated leakage at ambient temperature in order to establish if they open to a larger leak rate at temperature.

14.6 Failure criteria. This test is a "go-no go" test to detect packages that 'open-up', or become non-hermetic at elevated temperature. The detection of a measurable amount of ^{85}Kr, (greater than 500 cpm above ambient background), within the part after exposure to ^{85}Kr pressure at temperature indicates a "thermal-reject", (hermetic failure at elevated temperature). A thermal reject may be placed in a vacuum oven and the temperature increased for 10 minutes minimum, at 10ºC intervals, and the device removed to measure the ^{85}Kr content after each 10ºC increase, until the temperature is reached at which the ^{85}Kr reading begins to decrease, indicating the temperature at which the device opened during pressurization. This will indicate the approximate temperature at which the device is leaking, (or increasing its leak rate).

Source: https://assist.dla.mil -- Downloaded: 2016-12-05T07:38Z
Check the source to verify that this is the current version before use.

15. Test conditions CH_1 and CH_2 – combined fine/gross leak. Test conditions CH_1 and CH_2 expand the range of helium fine leak to include the gross leak range and require the same test conditions using a specialized measurement apparatus Cumulative Helium Leak Detector (CHLD).

15.1 Apparatus. The apparatus for this procedure shall be as in 10.1 except that the optimum calibration leak standard is 5×10^{-10} atm-cc/sec, and since the slope of the accumulated helium is a linear function, measurements beyond 10^{-12} are achievable if the analyzer has sufficient sensitivity. A 5×10^{-12} helium leak standard shall be used to validate the sensitivity and linearity of the lower leak rate range and a 1×10^{-8} helium leak standard used for the higher range. The volume of the test chamber used for leak rate measurement should be held to the minimum practical, since too large (>100) a ratio between the device internal volume and the chamber dead volume will reduce the sensitivity limits when detecting gross leaks. The leak detector indicator shall be calibrated using a diffusion-type calibrated standard leak at least once every working shift. In addition, the test apparatus for CH_1 and CH_2 shall utilize a specialized pumping system which enables the volume of helium released to be measured as well as the rate of change or "slope" of the helium such that the leak rate is determined from the slope measurement for fine leaks and the volume for gross leaks.

The maximum ratio of test chamber dead volume to device internal volume Vc/Vd shall be established for individual part testing and batch testing to insure a gross leak amplitude will be detected with a signal to background ratio of at least 3 to one. This ratio is a function of the helium content of the purge gas as well as the internal volume and number of devices to be batch tested.

15.2 Procedure. The procedure for CH_1 "fixed" and CH_2 "flexible" methods shall be as in paragraph 10.2.

15.2.1 Evaluation of surface sorption. The evaluation of surface sorption shall be in accordance with 10.2.1.

15.2.1.1 Test condition CH_1. Test condition CH_1 fixed method shall be shall be in accordance with 10.2.

15.2.1.2 Test condition CH_2. Test condition CH_2 flexible method shall be shall be in accordance with 10.2.

15.2.1.3 Package volume and leak rate limits for CH_1 and CH_2. For test method CH_1 and CH_2, the minimum size package is determined by the ability of the apparatus to effectively detect a gross leak within the dwell time after the device has been removed from the tracer gas pressurization chamber with a signal to noise (background) ratio of at least three to one. It may be necessary to use a shorter test interval if the test chamber has a high background level of helium or the surface absorption (see 10.2.1) of the device is high. The only limit on maximum size is the size of the test chamber to accommodate the device under test. A gross leak for this test method is defined as a hole in the package at least 0.010 inches (0.254 mm) in diameter or smaller. With the appropriate gross leak threshold, a device without a seal or completely missing a lid, will be detected as a gross leak. In the worst case, a device with a gross leak will only contain atmospheric air and the instrument should demonstrate adequate sensitivity, i.e., the ability to measure the 5.0 ppm helium in ambient air contained in a device as a gross leak. The demonstrated minimum detectable leak rate for this test method is less than 1×10^{-13} atm-cc/sec, however, the design of the apparatus test chamber can increase or decrease this limit.

16. Summary. The following details shall be specified in the applicable performance specification sheet or acquisition document:

a. Test condition letter when a specific test is to be applied (see 3).

b. Accept or reject leak rate for test conditions G, H_1, or H_2 when other than the accept or reject leak rate specified herein applies (see 9.5.1, 10.2.1.1, and 10.2.2).

c. Where applicable, measurements after test (see 3).

d. Retest acceptability for test conditions G and H (see 9). For K, see 3.e.

e. Order of performance of fine and gross if other than fine followed by gross (see 3). The radioisotope gross and fine leak test may be run in any order, as both are a dry gas leak test.

Source: https://assist.dla.mil -- Downloaded: 2016-12-05T07:38Z
Check the source to verify that this is the current version before use.

17. Notes.

a The fine leak test shall be performed first if test condition E is used for gross leak. This sequence should be true regardless of whether the leak tests are part of a screening sequence or are included as group B or group C requirements.

b Any device that has been subjected to fluorocarbon leak testing will then interfere with subsequent dry gas leak testing. This is most noticeable with helium leak testing where it is known to reduce the measured leak rate by up to two orders of magnitude. The radioisotope method may be used to test such devices, but they shall be tested to a higher sensitivity to detect leakage, which can be one order of magnitude or more, greater than the measurement indicates. These tests shall be validated on a case by case basis using IGA test method 1018 of this test method standard on select devices provided that the lot of devices is large enough to support the validation tests. Also see test history 2.7 for nullifying the effects of fluorocarbons.

c. When retesting devices to test condition H_1, H_2 or CH, the history of device exposure to helium including dates, backfilling performed, tracer gas concentrations, pressure, and time exposed should be known in order to ensure reliable results. The sum of the bombing times and the total dwell time from the first bombing interval to the expected subsequent leak test can be used in the Howl-Mann equation to compute a new R_1 value if no helium was sealed in the device. Whenever parts are sealed in helium, or prior helium testing may have been performed on a device, the internal helium content can be calculated using the following equation:

$$Q_{He\text{-}total} = Q_{He} + p_i(e^{-(L(He)t/V)})$$

Where:

$Q_{He\text{-}total}$ = the total helium contained in the package at the time of test.

p_i = the atmospheres of helium sealed within the device.

L(He) = the true helium leak rate.

t = the time between seal and test.

V = the internal volume of the device in cc.

Q_{He} = the amount of helium forced into the device during bombing.

Where:

$$Q_{He} = \{P_E\text{-}[p_i(e^{-(L(He)t/V)})]\}(1 - e^{-(L(He)T/V)})$$

P_E = bombing pressure in absolute atmospheres.

T = the bombing time in seconds.

Once $Q_{He\text{-}total}$ is known, the leak rate test limit (R_1) can be determined from equation (5) of 15.2.1.3.

Any device detected as a marginal reject using test condition H or CH and no leak testing history is available can be retested using condition G_1 or G_2. When retesting devices the history of the prior testing is not required. The devices are pre-read for residual ^{85}Kr gas just prior to retesting. Any prior ^{85}Kr reading is subtracted from the reading after retesting. The new net reading indicates the leak rate of the package.

If the history of the part indicates that it has been subjected to fluorocarbon fluid testing, or if there is no history evidencing that it has not been subjected to any fluorocarbon fluids, then it shall be assumed that the part could be fluorocarbon contaminated and the recommendations of 17.

NOTE: "c" shall be followed.

Source: https://assist.dla.mil -- Downloaded: 2016-12-05T07:38Z
Check the source to verify that this is the current version before use.

d. The radioisotope method G_1 may be used to re-screen devices that have been subjected to fluorocarbon fluids, but they shall be tested to a higher sensitivity to detect leakage. The true leak rate however is sometimes seen to be two orders of magnitude greater than the indicated leak rate. When fine leak rates are detected, a re-test will demonstrate a non-linear increase in ^{85}Kr reading if the device has previously been subjected to fluorocarbon fluid. A vacuum-decay test can confirm that the leak rate is either a fine-leak and the true leak rate of the part, or that it is a 'diffusion' or 'solubility' leak rate through a liquid medium. Surface sorption is not a problem with ^{85}Kr as surface fluorocarbon liquid is easily detected by measuring the Beta radiation from ^{85}Kr gas absorbed in surface fluorocarbon fluid residues, since the Beta radiation is only detectable on surfaces and will not penetrate from within the device, ^{85}Kr gas quickly desorbs from surface fluorocarbon fluids, reducing surface sorption problems. The gamma radiation readings will confirm the amount of ^{85}Kr that has actually penetrated into the device if it is non-hermetic, and that confirms the leakage into the device.

e. When retesting devices to test condition H_1 the history of device exposure to helium including dates, backfilling performed, tracer gas concentrations, pressure, and time exposed, should be known in order to ensure reliable results. Whenever parts were sealed in helium, or prior helium testing may have been performed on a device, the internal helium content is unknown and any subsequent helium test may be flawed. In that case any device detected as a marginal reject should be retested using a different dry gas medium as in A, B, or G_2. When retesting devices to conditions A, B, G_2, the history of the prior ^{85}Kr testing is not required. The devices are pre-read for residual ^{85}Kr gas just prior to retesting. Any prior ^{85}Kr reading is subtracted from the reading after retesting. The new "net" reading indicates the leak rate of the package.

NOTE: The following procedure is based on the assumption that a complete and accurate history of prior helium testing has been accurately recorded.

f. When retesting devices to test condition H_1, H_2 or CH, the history of device exposure to helium including dates, backfilling performed, tracer gas concentrations, pressure, and time exposed, should be known in order to ensure reliable results. The sum of the bombing times and the total dwell time from the first bombing interval to the expected subsequent leak test can be used in the Howl-Mann equation to compute a new R_1 value if no helium was sealed in the device.

g. If the history of the part indicates that it has been subjected to fluorocarbon fluid testing, or if there is no history evidencing that it has not been subjected to any fluorocarbon fluids, then it shall be assumed that the part could be fluorocarbon contaminated and the recommendations of 17.

NOTE: The requirements of 17.c and 17.d shall be followed.

h. Surface adsorption: This test method has reduced the maximum allowable leak rate historically allowed for hermetic devices by several orders of magnitude and as a result, the effects of surface adsorption of the tracer gas from surface contamination such as moisture, grease, or oils, or attached or printed labels, or surface porosity or materials which have a significant diffusion rate for the tracer gas shall be addressed and requires additional diligence to obtain useful data in a reasonable time period. When helium is used as the tracer gas, it is particularly important to keep the devices under test clean and free of surface contamination as well as the test chamber and any associated fixturing. Especially troublesome are the low vapor pressure organic binders that are found in cosmetic products. Never handle devices to be leak tested or inlet chambers or fixtures of the leak tester with bare hands. Always use finger cots or ESD gloves which are clean. If any solvent cleaning is performed prior to leak testing, make certain the solvent is fully dispersed prior to any leak testing procedure.

Source: https://assist.dla.mil -- Downloaded: 2016-12-05T07:38Z
Check the source to verify that this is the current version before use.

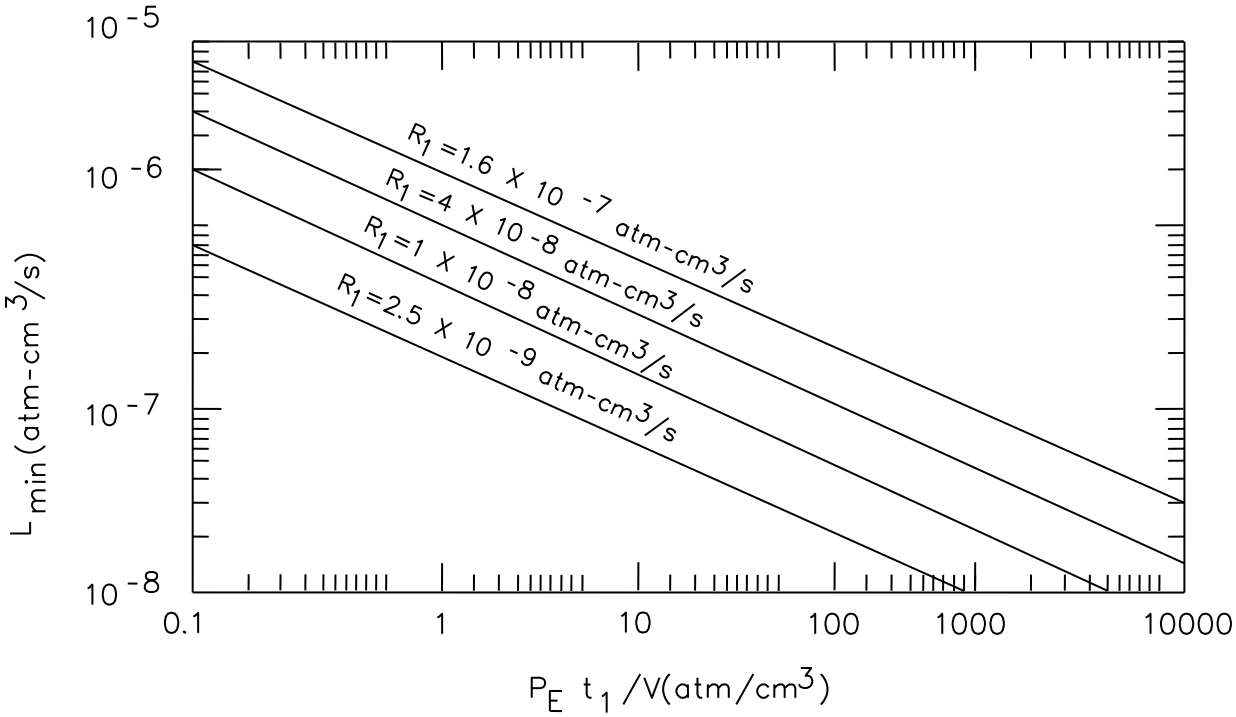

FIGURE 1071–5. Smallest detectable leak.

Source: https://assist.dla.mil -- Downloaded: 2016-12-05T07:38Z
Check the source to verify that this is the current version before use.

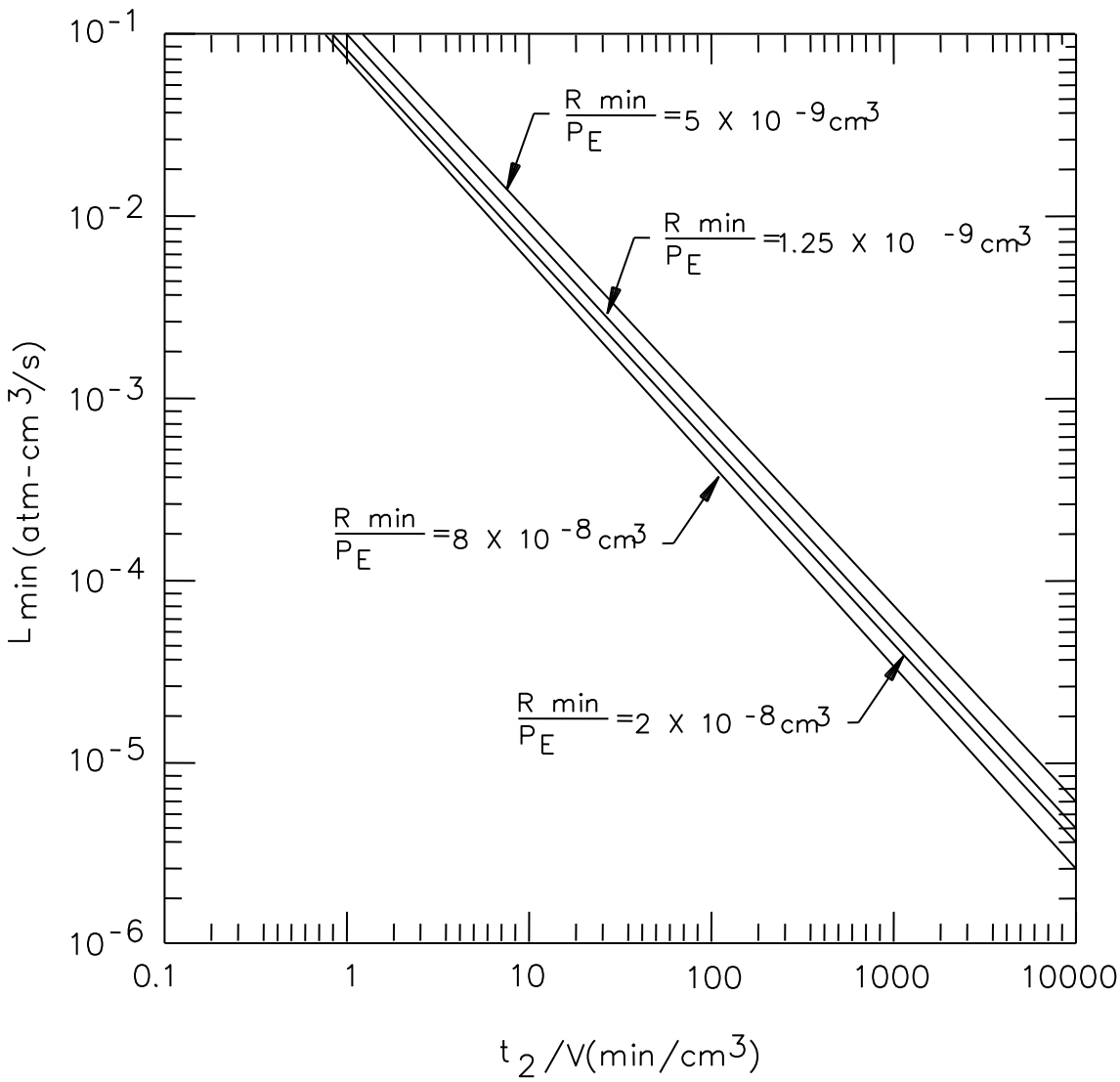

NOTE:

Upper test limit of equivalent standard leak rate as a function of dwell time, pressurization, and indicated leak rate as computed from the approximate solution, (e.g., for larger leaks where internal pressurization is complete).

FIGURE 1071–6. Largest detectable leak.

Source: https://assist.dla.mil -- Downloaded: 2016-12-05T07:38Z
Check the source to verify that this is the current version before use.

This page is intentionally left blank.

Source: https://assist.dla.mil -- Downloaded: 2016-12-05T07:38Z
Check the source to verify that this is the current version before use.

METHOD 1080.1

SINGLE-EVENT BURNOUT AND SINGLE-EVENT GATE RUPTURE

1. Purpose. The purpose of this test method is to establish a standard approach for conducting heavy ion irradiation of planar vertical power MOSFET semiconductor devices. This test method outlines the approach for characterization and for verification (lot acceptance tests and qualification tests) of discrete power MOSFETs to single-event burnout (SEB) and single-event gate rupture (SEGR). In principle, this test method may be applicable to conduct (SEB) and (SEGR) tests using neutrons, protons, and similar particles, as well as, to other structures that incorporate MOS type dielectrics (e.g., lateral MOSFETs, trench MOSFETs, integrated MOS capacitors, etc.); however, the application of this method to those variations is not directly addressed in this test method.

1.1 Terms and definitions. The following symbols and terms shall apply for the purpose of this test method:

a. Event cross-sectional area: Calculated as the number of recorded events per unit fluence.

b. DUT: Device under test.

c. Fluence: The ion flux integrated over the time during which the beam is active, expressed as ions/cm^2.

d. Flux: The number of ions passing through a one cm^2 area perpendicular to the ion beam per unit of time, expressed as ions/(cm^2•s).

e. I_{DS}: The measured drain-to-source current (amperes).

f. I_{GS}: The measured gate-to-source current (amperes).

g. Linear energy transfer (LET): The amount of energy transferred per unit length as the ion travels through a material, expressed as MeV/(mg/cm^2) in this test method (ion stopping power for a given target).

h. Single-event burnout (SEB): A single-ion-induced condition that causes a localized high-current state, which may result in catastrophic device failure, and is normally characterized by a significant increase in drain current that exceeds the manufacturer's rated drain leakage current.

i. Single-event gate rupture (SEGR): A single-ion-induced condition that causes a localized defect in the gate dielectric, which may result in catastrophic device failure and is normally characterized by a significant increase in gate current that exceeds the manufacturer's rated gate leakage current.

j. SEB circumvention: A technique used to prevent the device from catastrophically failing during an SEB event and is typically accomplished by limiting the current, voltage, or power to the DUT (for example, the use of resistors, inductors, etc.)

k. SEB cross-sectional area: Calculated as the number of SEB recorded events per unit fluence.

l. SEGR cross-sectional area: Calculated as the reciprocal of the fluence required to induce one SEGR event (since SEGR cannot be circumvented; only one SEGR event can be recorded).

m. SEGR post gate-stress test: After the heavy ion irradiation, an electrical test is conducted to verify the gate integrity which is typically accomplished by applying the maximum specified V_{GS} to the gate terminal and ensuring that the gate leakage current remains within it's rated specification (this test may use either the specified positive or negative rated gate voltage or tested to both conditions).

Source: https://assist.dla.mil -- Downloaded: 2016-12-05T07:38Z
Check the source to verify that this is the current version before use.

n. Threshold LET: The minimum surface LET required (ion species and energy shall be specified) to cause a single-ion-induced failure under the specified bias conditions.

o. V_{DS}: The applied drain-to-source voltage (volts).

p. V_{GS}: The applied gate-to-source voltage (volts).

q. V_{TH}: The value of V_{GS} where the inversion layer is formed and the device turns on.

r. V_{CRIT}: For a given ion species, the minimum voltage across the oxide to cause SEGR (common unit of volts). For the simple case of $V_{DS} = 0V$, V_{CRIT} is the minimum applied gate voltage to cause SEGR ($V_{CRIT} = V_{GS}$).

s. Heavy ion: Heavy ion in this test method refers to ion specie with atomic numbers greater than 1.

1.2 Device handling. Special care shall be taken to ensure that the devices are not damaged before the heavy ion testing. Since the package lids are removed before irradiation, extra precautions shall be taken to protect the exposed die. Devices shall be handled in accordance with standard engineering practices and operating procedures to protect the device against damage and electrostatic discharge. Use of anti-static foams, grounding straps, and other precautions is recommended.

NOTE 1: Some power MOSFETs tests may require voltages that exceed 32 volts, which poses a potential safety hazard. Safety precautions shall be taken to ensure safe operation of all equipment and personnel.

NOTE 2: Conformal coatings may interfere with the heavy ion tests affecting the ion penetration depth and egrading the ion energy. The effect of conformal coatings shall be evaluated. If the evaluation shows that the conformal coatings prevent adequate ion penetration depth and uniformity , then the conformal coatings shall be removed. Some conformal coatings, such as polyamide, may require chemical removal.

2. Apparatus. The apparatus required for SEB and SEGR test consists of a heavy ion source (see 2.1), a vacuum chamber system (if required, see 2.2), DUT test instrumentation (see 2.3), test circuit boards (see 2.4), cabling (see 2.5), switching system (if required, see 2.6), an x-y-z stage system (if required, see 2.7), and dosimetry measurement system (see 2.8).

2.1 Heavy ion source. The heavy ion source shall be a cyclotron, Van de Graaff generator, or other suitable heavy ion system. Unless otherwise specified, the average beam uniformity shall be maintained within +/- 15 percent over the entire die area and the ion beam energy shall provide sufficient ion penetration depth to induce the SEB and SEGR response. The heavy ion source should be capable of providing ion fluxes greater than 100,000 ions/cm^2•s; however, the average ion flux used during SEB and SEGR tests is determined by the sensitive die area, type of test, and other factors described in the method.

NOTE: 3: The accelerator design determines the maximum ion beam energy; and, therefore, some accelerators may be inadequate to perform a worst-case test condition.

NOTE 4: Some accelerators are RF-type machines (e.g. cyclotrons) and may have higher instantaneous fluxes.

NOTE 5: For SEGR, an ion penetration depth that places the Bragg Peak at the epitaxial/substrate interface has been shown to produce the lowest failure thresholds.

Source: https://assist.dla.mil -- Downloaded: 2016-12-05T07:38Z
Check the source to verify that this is the current version before use.

2.2 Vacuum chamber system. The vacuum chamber, if required, should be capable of accepting the test circuit board and board mounting frame and should provide an adequate cabling interface. The vacuum chamber system should be capable of accepting an x-y-z stage mechanism (if required). The vacuum pumping system should be capable of evacuating the vacuum chamber less than 1.3 x 10^{-1} Pa (10^{-3} torr) within a reasonable time frame (for this method, a reasonable time frame is 15 to 20 minutes; however, longer timeframes are acceptable if the test can be performed within the allocated costs and beam schedule). Precautions should be taken to ensure that components placed within the vacuum chamber do not interfere with the vacuum system or contaminate the system.

NOTE 6: Certain materials can out-gas, affecting the vacuum quality and some capacitors (e.g., electrolytic capacitors) may even explode, fail, or out-gas when placed within a vacuum system.

(i.e., instrumentation to provide bias voltages; and to monitor and record currents during irradiation; and to perform the required electrical tests prior to and after ion beam exposure)

2.3 DUT test instrumentation. The DUT test instrumentation shall be capable of establishing the required test conditions and measuring the required electrical parameters to perform the specified SEB and/or SEGR tests. Precautions should be taken to obtain an electrical measurements system capable of monitoring and recording the gate and drain currents within the specified resolution necessary to perform the test (typical gate current, I_{GS}, leakages are less than 10 nA and drain current, $I_{DS,}$ leakages are less than 100 nA).

NOTE 7: Many power MOSFETs require operating voltages in excess of 32 volts and safety precautions shall be followed to ensure safe operations of all equipment and personnel.

2.3.1 SEB instrumentation. SEB instrumentation to apply DUT voltages to record DUT currents may consist of one or more of the following types of instruments:

a. Power supply.

b. Ammeter.

c. Voltmeter.

d. Source measurement unit.

e. Counter system (if counting events).

f. Oscilloscope.

g. Switch system.

h. Computer system (if required, instrument controller).

2.3.2 SEGR instrumentation. SEGR instrumentation to apply DUT voltages and record DUT currents may consist of one or more of the following types of instruments:

a. Power supply.

b. Ammeter.

c. Voltmeter.

d. Source measurement unit.

e. Switch system.

f. Computer system (if required, instrument controller).

Source: https://assist.dla.mil -- Downloaded: 2016-12-05T07:38Z
Check the source to verify that this is the current version before use.

2.4 Test circuit board. The test circuit board contains the test socket, delidded DUT, any additional wiring, and any auxiliary components. The test board provides a mounting surface and interface between the test instrumentation and the DUT, applying V_{GS} and V_{DS}, while monitoring I_{GS} and I_{DS}. Figure 1080–1 shows a representative test circuit and figure 1080–2 shows a typical SEB circumvention and monitoring technique (other test circuit configurations are acceptable as long as they meet the specified requirements to perform the SEB and SEGR tests). The resistor-capacitor network attached to the gate node functions as a low-pass filter to protect the gate from switching transients. Unless otherwise specified, component values of the low-pass filter (if required) defined by the test organization. Unless otherwise specified, component values of the drain capacitors and resistors are defined by the test organization. All auxiliary components, such as the resistors, capacitors, or current probes, shall be included in the final test circuit. Unless otherwise specified, any verified SEB circumvention and monitoring technique is acceptable. The test circuit board may incorporate multiple test sockets to optimize the usage of the heavy ion beam. The test socket, in which the DUT is inserted, shall be mounted in such a way that the DUT surface is perpendicular (nominally within ±5°C) to the heavy ion beam. Unless otherwise specified, the DUT shall be delidded prior to the test and the entire die shall be irradiated.

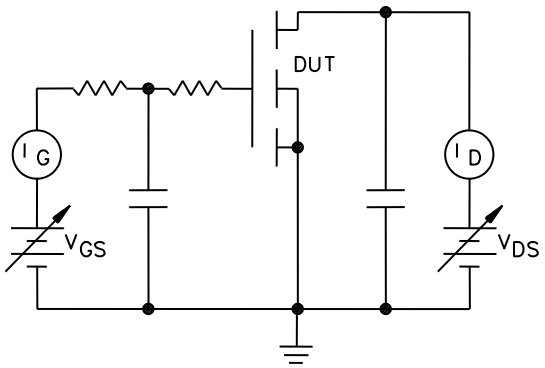

FIGURE 1080–1. Basic SEB/SEGR test circuit.

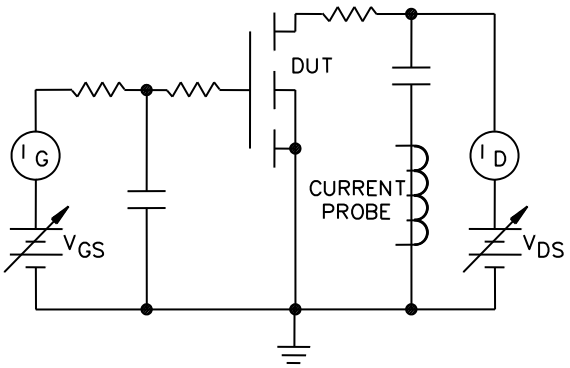

FIGURE 1080–2. SEB circumvention and monitoring circuit.

NOTE 8: Care shall be taken to minimize the resistance between the source and ground to prevent current transients from producing voltages that may exceed the gate-to-source breakdown voltage, which may damage the gate during radiation tests.

NOTE 9: If possible, measurement resolution of current meters should be capable of current measurements of less than 1 nA and stray leakage currents should be less than 10 nA.

NOTE 10: When the circuit is energized (drain and gate bias applied), the measured leakage currents will decrease with time as the capacitors stabilize (sufficient time should be allowed to ensure that voltages have stabilized prior to heavy ion beam exposure).

NOTE 11: In a non-circumvented test, care shall be taken to minimize the stray inductances and resistances that could unintentionally quench a SEB event.

Source: https://assist.dla.mil -- Downloaded: 2016-12-05T07:38Z
Check the source to verify that this is the current version before use.

2.5 Cabling. Cables are typically used to connect the test circuit board to the DUT and test instrumentation (voltage sources and current monitors). The cable length shall be minimized to prevent interference with the desired measurement. However, minimum cable length is dictated by the spatial separation between the test circuit board and the DUT test instrumentation. Observation of SEB pulses shall be performed using properly terminated shielded cables to minimize reflections and other signal/noise interference.

2.6 Switching system. A switching system can be used when multiple devices are placed on the test circuit board. The switching system shall provide electrical isolation between the gate and drain electrodes of the various test devices on the test circuit board. Inclusion of a switching system shall not interfere with the electrical measurement system, as specified in 2.

2.7 X-Y-Z stage system. If multiple devices are placed on the test circuit board, an x-y-z stage system can be used to provide a mechanical mechanism to move the DUT into and out of the heavy ion beam.

2.8 Dosimetry system. The dosimetry system shall be used to determine the ion beam energy, LET, average ion beam flux, fluence, and average ion beam uniformity.

NOTE 12: Most heavy ion test facilities provide dosimetry. The facility should be contacted to ensure that dosimetry is being provided.

3 SEB and SEGR prediction. To assist in the preparation of the test plan and the selection of initial bias conditions, an appropriate SEB/SEGR prediction method may be utilized to predict the SEB and SEGR failure thresholds. The preferred method (if available) is to use previous measurements on similar device types. If available, test personnel should use these predicted failure thresholds to help verify that the SEGR and SEB test measurements are valid. If a significant difference (nominally greater than a ±30 percent deviation from the predicted response) is observed, test personnel should verify the test setup including the ion specie, ion energy, bias conditions, and device type.

3.1 SEB prediction. SEB predictions can be made using pervious SEB data, but, wide variations (die-to-die, wafer-to-wafer, lot-to-lot variations) in the SEB failure threshold may occur. Predictions based upon device simulation (second breakdown mechanism) have proven useful in predicting SEB failure thresholds; however, device simulations require extensive knowledge about the DUT design and process which, in most cases, are not readily available.

3.2 SEGR prediction. SEGR predictions can be made using previous SEGR data or calculated using published models. If previous test results are unavailable or the device layout, design, or other processes have been modified, then SEGR failure thresholds may be predicted using empirical predictions or analytical predictions.

3.2.1 SEGR semi-empirical prediction. One SEGR semi-empirical prediction uses equation (1) to predict the SEGR failure threshold voltage (V_{CRIT}) of the oxide (SiO_2) response (commonly referred to as the gate oxide capacitor response) during heavy ion irradiation to the specified ion species. For the simple case where V_{DS} = 0 volts, V_{CRIT} is equal to V_{GS} ($V_{CRIT} = V_{GS}$).

Equation (1)

$$V_{CRIT} = \frac{(E_{OX_BR})(T_{OX})}{\left(1 + \frac{Z}{44}\right)}$$

Where: E_{OX_BR} is the breakdown field strength of the oxide (V/cm), T_{OX} is the thickness of the gate oxide dielectric (cm), and Z is the atomic number of the ion species.

Source: https://assist.dla.mil -- Downloaded: 2016-12-05T07:38Z
Check the source to verify that this is the current version before use.

NOTE 13: When $V_{DS} \neq 0V$, a portion of the applied drain voltage may be coupled across the oxide during heavy ion irradiation, which may cause SEGR to occur at a lower value of V_{GS}. The amount of drain voltage coupled to the oxide strongly depends uponthe energy deposition through the critical device layers (the epitaxial layer(s)). Therefore, when $V_{DS} \neq 0V$, $|V_{CRIT}|$ is less than the sum of $|V_{GS}|$ and $|V_{DS}|$ but $|V_{CRIT}|$ is greater than $|V_{GS}|$.

NOTE 14: Equation 1 is developed specifically for SiO_2 type oxides. Different oxide materials may cause changes in this expression and the applicability of the expression should be verified.

3.2.2 SEGR analytical prediction. Analytical predictions can be obtained using sophisticated numerical simulations to predict the SEGR failure threshold response. Additional information concerning these predictions can be found in the literature.

4. Characterization tests. Characterization tests are those required to obtain SEB cross-sectional area curves, or SEB and SEGR failure threshold curves. Data points are taken to describe the response of the discrete MOSFET as a function of V_{GS} and or V_{DS} over the operating range of the device and or over a range of LET values (or ion specie). Characterization tests are typically conducted to define the worst-case operating conditions or to identify the sensitive die area. Characterization tests may be required after process and or design changes are made to determine their impact upon SED and/or SEGR. Characterization tests are useful for establishing safe operating conditions for subsequent verification tests. Characterization tests do not have to be performed as a part of the verification tests unless fabrication/design changes may have invalidated earlier characterization tests. Unless otherwise specified, SEB and SEGR are tested with heavy ions while in an off-state bias conditions (SEGR may be tested while in an on-state condition if the drain bias is 0V).

NOTE 15: Angling the die surface away from the plane where the ion beam is perpendicular to the die surface to produce effective LET values is invalid and should not be used in SEB and SEGR characterization.

NOTE 16: Ion energy and specie may influence the measured SEB and SEGR failure threshold voltages; therefore, ion energy should be considered when determining/defining worst-case test conditions.

NOTE 17: For SEGR, the worst-case test condition for the ion occurs when the ion fully penetrates the epitaxial layer(s) with maximum energy deposition through the entire epitaxial layer(s).

NOTE 18: The maximum allowable V_{DS} bias increment for a DUT should be less than 10 percent of the device's rated drain voltage and the maximum allowable V_{GS} bias increment for a DUT should less than 25 percent of the device's rated gate voltage. Smaller V_{DS} and V_{GS} bias increments may be required to define safe operating conditions.

NOTE 19: Higher temperature are considered worst-cast conditions for SEGR and higher temperature are considered worst-cast for SEB. Devices should be evaluated on a case by case basis.

4.1 SEB characterization**.** Characterization requires that an SEB circumvention method be utilized. SEB characterization produces a cross-sectional area curve as a function of LET for a fixed V_{DS} and V_{GS}. SEB is not sensitive to changes in the gate bias, V_{GS}. The V_{GS} bias shall be sufficient to place the DUT in an "off" state condition (a gate voltage less than the DUTs threshold voltage, V_{TH}), allowing for potential total dose effects that may reduce the V_{TH}. Multiple SEB cross-sectional area curves may be required, expressing different operating conditions for V_{DS}.

NOTE 20: P-channel devices are not as sensitive to SEB as their n-channel counterparts.

NOTE 21: Some older stripe-cell MOSFETs have exhibited angular effects (e.g., ion angle along the stripe instead of across the stripe). If required, these angular effects may need to be characterized.

Source: https://assist.dla.mil -- Downloaded: 2016-12-05T07:38Z
Check the source to verify that this is the current version before use.

4.1.1 SEB cross-sectional area. If SEB is observed, SEB may be circumvented using any acceptable technique (e.g., a current-limiting resistor placed between the drain stiffening capacitor and the drain electrode) to prevent permanent damage and to monitor/record SEB events (some newer technologies cannot be circumvented, preventing the collection of many SEB events or SEB error count). To obtain an SEB error count, a current probe (Tektronix CT-2, sense resistor, or other suitable current probe) shall be inserted in the test circuit (e.g., between the stiffening capacitor and ground) to allow the SEB triggered response to be monitored. Using this type of circuitry/setup, the SEB triggered event produces a large current pulse~~s~~ (amplitude and width). A calibration is necessary to differentiate between non-SEB triggered current pulses and SEB triggered current pulses. SEB occurrence can be monitored using an electronic oscilloscope to record the shape of the SEB pulse(s), if required, and a pulse counter to record the number of SEB occurrences (triggered only to record SEB triggered current pulses). A point on the SEB cross-sectional area curve is then obtained by dividing the number of SEB events by the fluence for that given test condition. The SEB cross sectional curve is subsequently determined by defining several points over a range of LET values. As a minimum, the SEB cross-sectional curve should include the following points.

a. One point where no SEB event is observed (assume an error count of 1 to allow plotting on log paper).

b. Three points where SEB events are triggered and the number of events increase with increasing LET.

c. One point where SEB events are triggered but the number of triggered events has saturated.

After the DUTs have been de-lidded and the vacuum chamber evacuated (if vacuum chamber is required), apply the specified V_{GS} and V_{DS} bias condition; and irradiate the DUT to the specified fluence level (typical test fluences between 10^5 and 10^7 ions/cm^2). If SEB occurs, record the event by incrementing the counter. The flux shall be adjusted so that the number of SEB events is no greater than 100 events per second (in addition, the event rate cannot exceed the test system recording rate). When the desired fluence is achieved, the beam is shuttered; and the total number of SEB events are recorded. This process is continued, selecting different ions to obtain the required LET values. Repeat this process for the specified samples and conditions.

NOTE 22: An approximate SEB cross sectional area may be obtained using a low beam flux allowing the user to measure the time to SEB failure of beam fluence to SEB failure (cross sectional area = 1 / beam fluence to failure).

4.2 SEGR characterization.

a. SEGR cross-sectional area curve as a function of LET for fixed V_{GS} and V_{DS} bias conditions;

b. SEGR failure threshold curve of V_{GS} as a function of V_{DS} for fixed LET values; or

c. SEGR failure threshold curve of V_{DS} as a function of LET at fixed V_{GS} bias conditions.

Multiple SEGR cross sectional area curves may be required to express different V_{DS} and V_{GS} conditions. Multiple SEGR threshold curves may be required to express different V_{GS}, V_{DS}, or LET conditions. SEGR characterization may be performed in conjunction with SEGR verification tests (see 5.0).

NOTE 23: SEGR characterization curves may be better expressed as a function of ion species (atomic number) instead as a function of LET. Ion beam characteristics shall be included with the response curves (ion LET at die surface, ion species, and ion energy).

Source: https://assist.dla.mil -- Downloaded: 2016-12-05T07:38Z
Check the source to verify that this is the current version before use.

4.2.1 SEGR cross-sectional area. If specified in the test requirements and if SEGR occurs, an SEGR cross-sectional area curve shall be obtained. However, SEGR cannot be circumvented. Hence, to obtain an SEGR cross-sectional area curve for a given bias condition requires the destruction of many samples (e.g., five LET values and three devices/LET values require fifteen devices). Since SEGR is destructive, the ion irradiation shall be immediately terminated upon detection of the first SEGR event in order to provide the measured fluence to induce SEGR failure. A single point on the SEGR cross-sectional area curve is obtained by dividing one SEGR event by the measured fluence to induce failure.

With the DUTs lid removed and the chamber evacuated (if a vacuum chamber is required), apply the specified V_{GS} and V_{DS} bias condition; and irradiate the DUT to the specified fluence level (typical fluence may range between 10^5 and 10^7 ions/cm^2). If SEGR occurs, immediately terminate the exposure and record the measured fluence to induce failure (note that lower ion fluxes provide more accurate measured fluences to induce failure). If the maximum fluence is achieved and the DUT passes the post gate-stress test (if required), a new test condition or a new DUT can be selected. If SEGR occurs, a new DUT shall be selected. Apply the next test condition (repeating the test condition, incrementing V_{GS} and V_{DS}, or changing the ion specie). This process is repeated until the desired SEGR cross-sectional curve is obtained. Repeat this process as necessary to obtain all of the required SEGR cross-sectional curves. Note that SEGR results in device failure and only represents a single data point. For the special case where the applied dc field across the gate dielectric is less than 1 MV/cm, the procedure to obtain a cross-sectional area curve shall include a post gate-stress test.

NOTE 24: If SEGR is only observed during the post-gate stress test, then an accurate cross-sectional area curve cannot be derived and this interference should be noted.

NOTE 25: SEGR cross sectional are obtained using low beam fluxes allowing the user to measure the time to SEGR failure or beam fluence to SEGR failure (cross sectional area = 1 / beam fluence to failure).

4.2.2 SEGR post gate-stress test. If the gate bias is small (typically V_{GS} less than 50 percent of the maximum rated gate voltage may be considered small) during irradiation, SEGR may or may not produce catastrophic failure until sufficient gate bias is applied. If insufficient gate bias is applied, SEGR may produce latent defects. For small gate biases, a post gate-stress test shall be performed after each irradiation.

4.2.2.1 Condition A. The post gate-stress test shall apply an off-state bias equal to the maximum rated gate voltage (±10 percent) and apply a drain bias (off-state drain bias) equal to 80 percent of the device's rated drain breakdown voltage (BV_{DSS}) or as specified in the test requirements (the post-gate stress test can use either the maximum rated positive or negative gate voltage or tested to both. The post-gate bias should be applied for a minimum of one second unless otherwise specified in the test requirements.

4.2.2.2 Condition B. The post-gate stress test shall apply only gate biases (an on-state gate bias or an off-state gate bias) equal to the maximum rated gate voltage (±10 percent) or as specified in the test requirements. The post gate-stress bias should be applied to the device for a minimum of one second unless otherwise specified in the test requirements.

Source: https://assist.dla.mil -- Downloaded: 2016-12-05T07:38Z
Check the source to verify that this is the current version before use.

5. Verification tests. Verification tests require the irradiation of the DUT to specified test conditions (e.g. gate bias, drain bias, ion species, ion energy at a specified reference point, LET value at a reference point, ion range at a specified reference point, ion flux, and ion fluence). Verification tests are useful for hardness assurance, qualification tests, and lot acceptance tests of discrete power MOSFETs to determine their suitability at the specified test conditions (ion beam and bias conditions). Verification tests use a "pass/no pass" criterion and may be destructive.

NOTE 26: Angling the die surface away from the plane where the ion beam is perpendicular to that die surface to produce effective LET value is invalid and shall not be used during verification tests.

NOTE 27: Ion energy influences the measured SEGR failure threshold voltages; therefore, ion energy shall be considered when determining/defining worst-case test conditions. Worst-case test condition for SEGR occurs when the ion fully penetrates the epitaxial layer(s) with maximum energy deposition throughout the epitaxial layer(s).

NOTE 28: Higher temperature has been demonstrated to increase the LET threshold for SEB and to improve the SEGR failure threshold voltage; therefore, lower operating temperatures produce worst-case test conditions.

5.1 SEB verification tests. For SEB verification, a sufficiently large capacitance is placed at the drain electrode to produce catastrophic failure (unless specified, no circumvention techniques are used to perform this verification test). With the DUT de-lidded and the vacuum chamber evacuated (if vacuum chamber is required), apply the specified V_{GS} and V_{DS} bias condition; irradiate DUT to the specified fluence level (if failure occurs, the exposure can be terminated); record the SEB test results; and repeat the test sequence for the specified samples and/or test conditions.

5.2 SEGR verification tests. For SEGR verification, this test is a two-step process. With DUT delidded and the vacuum chamber evacuated (if vacuum chamber is required), apply the specified V_{GS} and V_{DS} bias condition; and irradiate DUT to the specified fluence (if failure occurs, the exposure can be terminated). The second step requires a post gate-stress test to be performed after irradiation, if the gate bias during irradiation was less than the maximum rated operating gate voltage. Record SEGR result and repeat the test sequence for the specified samples and/or test conditions.

6. SEB and SEGR test procedure. The SEB and SEGR test procedure shall document the proper steps to be followed before, during, and after heavy ion irradiation. Sufficient samples shall be obtained to conduct the test. Samples with conformal coatings, such as polyamide, shall be chemically removed before testing. SEB and SEGR both can result in catastrophic failure that produces large leakage currents, destroying the device. For SEB tests, a capacitance sufficient to hold the bias voltage within ±10 percent may be required to induce damage during an SEB event. For SEB characterization tests, SEB events can be circumvented and recorded to produce an SEB event count, which in turn can be used to produce points on a cross-sectional area curve. To help select the proper test conditions, the device's susceptibility to SEB/SEGR should be estimated using available information and tools (previous data, prediction tools, etc.) The required ion specie is selected and the ion beam energy shall be tuned and verified using the dosimetry system. The test circuit board, cabling, and instrumentation shall be connected and its operation verified. Before irradiation, test devices shall be de-lidded and inserted into the test circuit board. The drain and gate currents, I_{GS} and I_{DS}, shall be monitored before, during, and after the irradiation(s), as well as during the post gate-stress test, to verify the condition of the DUT. After completion of the test run, the results of the test shall be recorded and documented.

Source: https://assist.dla.mil -- Downloaded: 2016-12-05T07:38Z
Check the source to verify that this is the current version before use.

6.1 SEB and SEGR test plan. The SEB and SEGR test plan shall support each test. The test plan shall be used as a guide for the procedures and decisions during irradiation. The test plan shall be developed and shall include but is not limited to:

a. Ion specie and ion energy (see 6.1.1).

b. Device information (see 6.1.2).

c. Pre- and post-electrical test parameters (see 6.1.3).

d. Test configuration (see 6.1.4).

e. Test sequence (see 6.1.5).

f. SEB/SEGR detection (see 6.1.6).

g. Data recording (see 6.1.7).

h. Reporting requirements (see 6.1.8).

6.1.1 Ion specie and energy. The test plan shall identify the ion specie and an appropriate energy to perform the test. Selection of the ion species and its energy at a reference point determines the LET value at the reference point. Obtaining a range of LET values requires using different ion species at different energies. Note that using angles to modulate the LET value is unacceptable. Selection of a different ion specie and energy by test personnel requires verification that the ion LET and its range meet the test requirements. Verification can be made using a suitable simulation code to predict the stopping power of the ion in the target material (such as SRMI). Also, note that the energy of the ion beam has been shown to influence the SEGR failure thresholds. Therefore, determination of the worst case test condition can require multiple irradiations with the same ion at different energies (if sufficient details about the device layers are not available to determine the worst-cast test condition.

6.1.2 Device information. The test plan shall provide the device information, including a description of the devices to be tested and the number of test samples required for each test. The test plan shall identify the device type, acceptance lot, and other critical information. Devices shall be marked for traceability so that lids can be removed without loss of traceability. Identification markers should be placed on the flange or package and not on the lid. Only devices that have passed the pre-electrical tests shall undergo heavy ion tests. Test samples shall be randomly selected from the parent population. The number of samples shall be specified to meet the test requirements. For the purposes of verification tests, a representative sample should be selected from the lot.

6.1.3 Electrical parameters. The test plan shall specify the electrical parameters to be measured before and after irradiation. The electrical parameters should include but are not limited to:

a. Gate leakage current, I_{GSS} (+) and I_{GSS} (–).

b. Drain leakage current, $I_{DSS.}$

c. Threshold voltage, $V_{TH.}$

d. Drain breakdown voltage, $BV_{DSS.}$

Source: https://assist.dla.mil -- Downloaded: 2016-12-05T07:38Z
Check the source to verify that this is the current version before use.

6.1.4 Test configuration. The test plan shall specify the test configuration providing the bias and exposure conditions for each test sample. The test plan shall specify the case temperature of the DUT if it is required to be set at other than the room ambient temperature.

6.1.5 Test sequence. The test plan should specify a test sequence similar to figure 1080–3. For characterization tests, the test plan shall define the initial bias condition and the bias increment for V_{DS} and/or V_{GS}. The V_{DS} bias increment shall not exceed 10 percent of the device's rated drain breakdown voltage or as specified in the test requirements. The V_{GS} bias requirement should not exceed 25 percent of the device's maximum rated gate voltage or as specified in the test requirements (the V_{GS} and V_{DS} bias increments define the resolution of the failure threshold voltage). For verification tests, the test plan shall define the specified biases, the minimum number of samples that shall be tested at each bias, and the handling/storage of the devices upon test completion. Any additional test steps shall be specified as well as any special handling requirements.

6.1.6 SEB/SEGR detection. The test plan shall specify the procedure to monitor the gate and drain currents, I_{GS} and I_{DS}, before, during, and after the irradiation(s). In addition, the gate and drain currents shall be monitored during the post gate-stress test to verify that the DUT was not damaged during the previous irradiation. Typically, SEB results in a drain-to-source resistive short and SEGR results in a gate to drain resistive short. Final determination of the failure (SEB or SEGR) may require visual examination of the die surface (typically, SEB results in discoloration and/or burn marks on the die surface and SEGR shows no surface damage).

6.1.7 Data recording. The test plan shall specify the information and parameters that shall be recorded before, during and after the test. Recorded data shall include but is not limited to:

a. Ion beam information (ion species, flux, ion energy at a specified reference point, ion range at a specified reference point, LET at a specified reference point, degraders (if used), air gap distance (if using open air irradiation), etc.

b. Bias conditions (gate and drain) and currents (gate and drain). Currents shall be recorded at specified intervals during the heavy ion irradiation.

c. Post gate-stress test conditions including bias conditions and measured currents.

d. Pre- and post-radiation electrical test summary.

6.1.8 Reporting requirements. The test plan shall specify the test documentation as required by 7 herein.

Source: https://assist.dla.mil -- Downloaded: 2016-12-05T07:38Z
Check the source to verify that this is the current version before use.

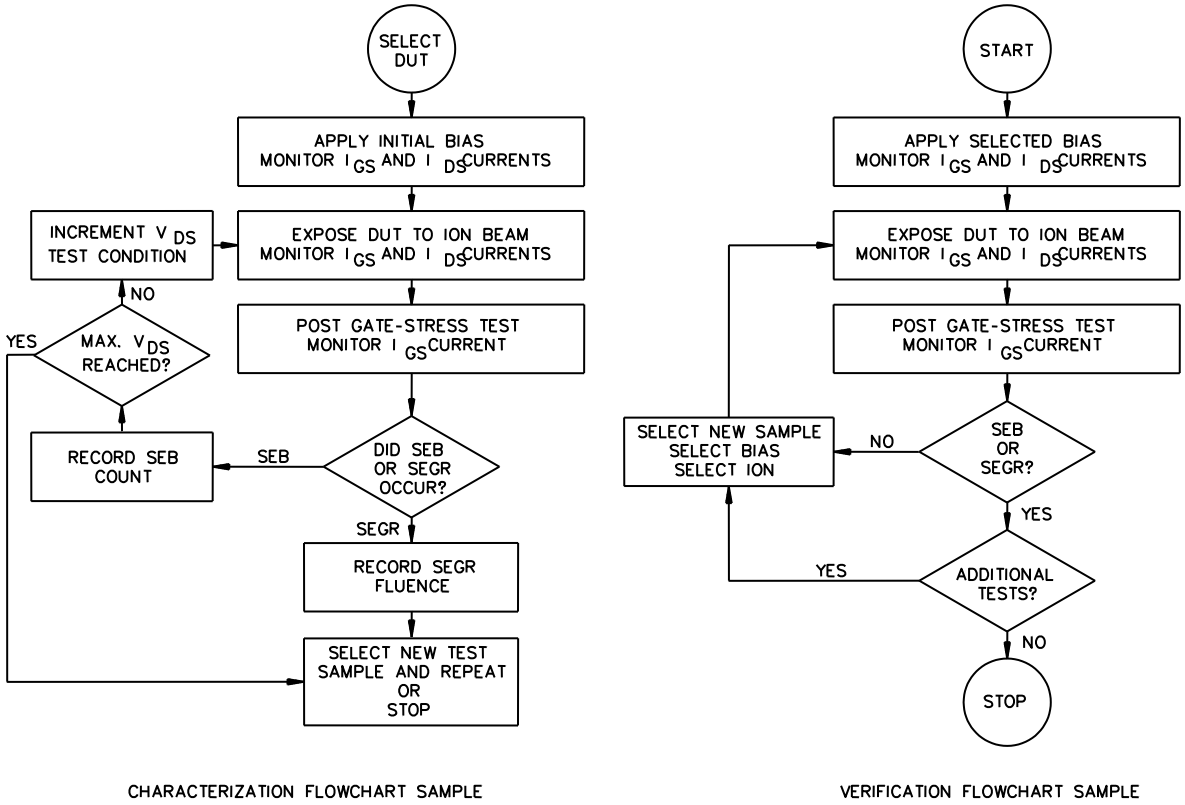

FIGURE 1080–3. Typical test plan flowcharts.

6.2 Radiation test procedure. The test plan shall be used as a guide to perform the radiation test. A typical SEB/SEGR test procedure is given here as an example.

a. Test personnel shall specify the selected ion specie and energy to the facility operators as defined in the SEGR/SEB test plan specifying the desired flux, fluence, LET, range, and beam uniformity. Dosimetry shall be performed to verify that the ion beam characteristics are as specified.

b. The SEGR/SEB test board shall be mounted in the test fixture mounting frame. All necessary test cables shall be connected to the test board and vacuum feed-through inside the vacuum chamber (if vacuum chamber is required).

c. The test instrumentation shall be set up as close as possible to the vacuum chamber. All necessary test cables shall be connected to the test hardware and vacuum feed-through outside the vacuum chamber.

d. When the test system is assembled, the test system shall be verified for continuity and operation. Note that a quick check can be performed by applying a V_{GS} and V_{DS} and verifying the presence of these voltages with a voltmeter.

Source: https://assist.dla.mil -- Downloaded: 2016-12-05T07:38Z
Check the source to verify that this is the current version before use.

e. After test system verification is completed, ground all electrodes, and insert the devices for test. Handling of devices shall be in accordance with normal ESD practices. If lids were not removed before placement on the test circuit board, remove the device lids. To verify that the devices were not damaged during the de-lidding process or insertion into the test circuit board, a simple electrical check of I_{GS} and I_{DS} should be performed.

f. After device verification is completed, the device to be tested shall be aligned to the ion beam. With the beam shuttered and the DUT biases set at 0 volts, perform an alignment of the DUT to the ion beam. Note that some facilities provide a laser alignment system for this task.

g. When positional alignment is complete, turn off any lighting systems and laser systems in the vacuum chamber. Apply the selected bias conditions to the DUT, and begin monitoring the gate and drain leakage currents, I_{GS} and I_{DS}. Note that excitation by lights or laser may produce photocurrents which may interfere with the measurements.

h. When ready, open the ion beam shutter, exposing the DUT to the heavy ion beam. Note that most facilities include instrumentation to monitor the ion beam characteristics monitoring the average flux, fluence, and beam uniformity which should be recorded. When the desired fluence level is achieved, shutter the ion beam, terminating the irradiation.

   (1) If performing an SEB characterization test, the test circuit shall include an appropriate circumvention technique and a current-sensing circuit. The number of current pulses for each irradiation shall be recorded (see 4.1).

   (2) If performing an SEGR characterization test, the ion beam shall be shuttered immediately following the detection of SEGR-any significant gate current change. The ion fluence at failure shall be recorded. Note that detection of SEGR may require the test personnel to make a judgment concerning the SEGR status of the device.

   (3) If performing SEGR or SEB verification tests, the gate and drain leakage currents, I_{GS} and I_{DS}, shall be monitored. If any current changes are recorded (a test flag may be set to indicate when I_{GS} exceeds a certain current level alerting test personnel that an event may have occurred; however, the test flag is only an indicator for SEGR occurrence; gate current increases that do not exceed the flag may still indicate SEGR), document the observed test conditions and changes.

i. After the ion beam is shuttered, a post gate-stress test shall be performed. During the post gate-stress test (the rated gate voltage is applied), the gate current shall be monitored. If a gate current change is detected (a flag may be set to indicate when I_{GS} exceeds a certain gate leakage current – a typical test flag is the rated gate leakage current), document the observed test conditions and changes.

j. Upon completion of the post gate-stress test, record all pertinent test data. Record run number, ion specie, ion energy, range, LET, average flux, fluence, and test conditions (V_{GS}, V_{DS}). Record any changes in the drain or gate currents (I_{GS} and I_{DS}) before, during, and after the ion irradiation. Record any changes in the drain and gate currents, I_{GS} and I_{DS}, during the post gate-stress test. Determine the status of the test run. If the test is a characterization test, increment the test condition or select new device as required. Repeat test procedure. If performing verification tests, select next device and/or test conditions. Repeat test procedure.

Source: https://assist.dla.mil -- Downloaded: 2016-12-05T07:38Z
Check the source to verify that this is the current version before use.

7. Data formatting and reporting. Test data and test reports shall be maintained and shall include the following information:

a. If available, device type, identification marker, lot identification, and date code.

b. Test date and test personnel names.

c. Ion beam conditions: Heavy ion facility, accelerator type, ion specie, energy, average flux, LET value (with a reference point such as a die surface), ion range in DUT, ion fluence, and the specification of an open air or vacuum system.

d. Schematic of test circuit and test board.

e. Dosimetry output of each ion beam used.

f. Bias conditions of each exposure run.

g. Record of observed SEGR or SEB event (current changes).

h. Device case temperature (only if required at other than room ambient).

i. Pre- and post-electrical test parameters and results.

j. Post gate-stress test results

k. Post-analysis results (e.g., visual die examination, etc.)

Source: https://assist.dla.mil -- Downloaded: 2016-12-05T07:38Z
Check the source to verify that this is the current version before use.

METHOD 1081

DIELECTRIC WITHSTANDING VOLTAGE

1. Purpose. This test method establishes a procedure for performing dielectric withstanding voltage test (also called high-potential, over potential, voltage breakdown, or dielectric-strength test) on semiconductor devices. The purpose of this test is to ensure that all devices have low electrical leakage from pin to case under the specified conditions. This test consists of the application of a voltage higher than rated voltage for a specific time between mutually insulated portions of a device or between insulated portions and ground. This is used to prove that the device can operate safely at its rated voltage and withstand momentary overpotentials due to switching, surges, and other similar phenomena. Although this test is often called a voltage breakdown or dielectric-strength test, it is not intended that this test cause insulation breakdown or that it be used for detecting corona, rather, it serves to determine whether insulating materials and spacing in the device are adequate. When a device is faulty in these respects, application of the test voltage will result in either disruptive discharge or deterioration. Disruptive discharge is evidenced by flashover (surface discharge), sparkover (air discharge), or breakdown (puncture discharge). Deterioration due to excessive leakage currents may change electrical parameters or physical characteristics.

1.1 Precautions. The dielectric withstanding voltage test should be used with caution particularly during inplant conformance inspection testing, as even an overpotential less than the breakdown voltage may injure the insulation and thereby reduce its safety factor. Therefore, repeated application of the test voltage on the same device is not recommended. In cases when subsequent application of the test potential is specified in the test routine, it is recommended that the succeeding tests be made at reduced potential. When either alternating-current (ac) or direct current (dc) test voltages are used, care should be taken to be certain that the test voltage is free of recurring transients or high peaks. Direct potentials are considered less damaging than alternating potentials which are equivalent in ability to detect flaws in design and construction. However, the latter are usually specified because high alternating potentials are more readily obtainable. Suitable precautions must be taken to protect test personnel and apparatus because of the high potentials used.

1.2 Factors affecting use. Dielectric behavior of gases, oils, and solids is affected in various degrees by many factors, such as atmospheric temperature, moisture, and pressure; condition and form of electrodes; frequency, waveform, rate of application, and duration of test voltage; geometry of the device; position of the device (particularly oil-filled devices); mechanical stresses; and previous test history. Unless these factors are properly selected as required by the type of dielectric, or suitable correction factors can be applied, comparison of the results of individual dielectric withstanding voltage tests may be extremely difficult.

2. Apparatus. The test equipment shall consist of a high voltage source, voltmeter, ammeter, and fault indicator.

2.1 High voltage source. The nature of the potential (ac or dc) shall be as specified. When an alternating potential is specified, the test voltage provided by the high voltage source shall be nominally 60 hertz in frequency and shall approximate, as closely as possible, a true sine wave in form. Other commercial power frequencies may be used for inplant conformance inspection testing, when specified. All alternating potentials shall be expressed as root-mean-square (rms) values, unless otherwise specified. The kilovolt-ampere rating and impedance of the source shall be such as to permit operation at all testing loads without serious distortion of the waveform and without serious change in voltage for any setting. When the device demands substantial test source power capacity, the regulation of the source shall be specified. When a minimum kilovoltampere rating is required, it shall be specified. When a direct potential is specified, the ripple content shall not exceed 5 percent rms of the test potential. When required, a suitable current-limiting device shall be used to limit current surges to the value specified.

Source: https://assist.dla.mil -- Downloaded: 2016-12-05T07:38Z
Check the source to verify that this is the current version before use.

2.2 Voltage measuring device. A voltmeter shall be used to measure the applied voltage to an accuracy of at least 5 percent, unless otherwise specified. When a transformer is used as a high voltage source of alternating potential, a voltmeter connected across the primary side or across a tertiary winding may be used provided it is previously determined that the actual voltage across the device will be within the allowable tolerance under any normal load condition.

2.3 Leakage current measuring device. When any leakage current requirement is specified, a suitable method shall be used to measure the leakage current to an accuracy of at least 5 percent of the specified requirement.

2.4 Fault indicator. Suitable means shall be provided to indicate the occurrence of disruptive discharge and leakage current in case it is not visually evident in the device. The voltage measuring device of 2.2, the leakage current measuring device of 2.3, or an appropriate indicator light or an overload protective device may be used for this purpose.

3. Procedure.

3.1 Preparation. When special preparations or conditions such as special test fixtures, reconnections, grounding, isolation, or immersion in water are required, they shall be specified.

3.2 Test voltage. Devices shall be subjected to a test voltage of the magnitude and nature (ac or dc) specified.

3.3 Points of application. The test voltage shall be applied between mutually insulated portions of the device or between insulated portions and ground as specified. The method of connection of the test voltage to the device should be specified only when it is a significant factor.

3.4 Rate of application. The test voltage shall be raised from zero to the specified value as uniformly as possible, at a rate of approximately 500 volts (rms or dc) per second, unless otherwise specified. At the option of the manufacturer, the test voltage may be applied instantaneously during in-plant quality conformance testing.

3.5 Duration of application. Unless otherwise specified, the test voltage shall be maintained at the specified value for a period of 60 seconds for qualification testing. For screening and/or quality conformance testing, when specified, reduced time with a possible correlated higher test voltage may be used. Devices with movable parts shall be tested as specified, in a manner to assure that repeated stresses are not applied to the same dielectric. Upon completion of the test, the test voltage shall be gradually reduced to avoid surges. At the option of the manufacturer, the test voltage may be removed instantaneously during screening and/or quality conformance testing.

3.6 Examination and measurement of specimen. During the dielectric withstanding voltage test, the fault indicator shall be monitored for evidence of disruptive discharge and leakage current. Following this, the device shall be examined and measurements shall be performed to determine the effect of the dielectric withstanding voltage test on specific operating characteristics, when specified.

4. Summary. The following details shall be specified in the applicable performance specification sheet or acquisition document:

a. Special preparation or conditions, if applicable.

b. Magnitude of test voltage.

c. Nature of potential (ac or dc).

d. Duration of application of test voltage, if other than 60 seconds.

e. Points of application of test voltage.

Source: https://assist.dla.mil -- Downloaded: 2016-12-05T07:38Z
Check the source to verify that this is the current version before use.

f. Method of connection of test voltage to specimen.

g. Regulation, if applicable.

h. Minimum kilovolt-ampere rating of high voltage source.

i. Limiting value of surge current, if applicable.

j. Maximum leakage current requirement, if applicable.

k. End-point measurements and examinations such as end-point electrical measurements, seal test (test method 1071 of this test method standard), or other acceptance criteria.

Source: https://assist.dla.mil -- Downloaded: 2016-12-05T07:38Z
Check the source to verify that this is the current version before use.

This page is intentionally left blank.

Source: https://assist.dla.mil -- Downloaded: 2016-12-05T07:38Z
Check the source to verify that this is the current version before use.

CONCLUDING MATERIAL

Custodians:
Army – CR
Navy – EC
Air Force – 85
NASA – NA
DLA – CC

Review activities:
Army – AR, MI, SM
Navy – AS, CG, MC, SH
Air Force – 19, 99
Other – NRO

Preparing activity:
DLA – CC

Project: 5961–2011–071

NOTE: The activities listed above were interested in this document as of the date of this document. Since organizations and responsibilities can change, you should verify the currency of the information above using the ASSIST Online database at https://assist.daps.dla.mil.

Source: https://assist.dla.mil -- Downloaded: 2016-12-05T07:38Z
Check the source to verify that this is the current version before use.