MIL-B-22191D
24 May 1985
SUPERSEDING
MIL-B-22191C
2 February 1972

MILITARY SPECIFICATION

BARRIER MATERIALS, TRANSPARENT, FLEXIBLE, HEAT-SEALABLE

This specification is approved for use by all Departments and Agencies of the Department of Defense.

1. SCOPE

1.1 Scope. This specification establishes the requirements for transparent, flexible, heat-sealable barrier materials for the protection of military equipment and supplies during shipment and storage (see 6.1).

1.2 Classification. The barrier materials shall be of the following types, as specified (see 6.1 & 6.2).

Type I - Waterproof, greaseproof, watervaporproof

Type II - Waterproof, greaseproof

Type III - Waterproof

2. APPLICABLE DOCUMENTS.

2.1 Government documents.

2.1.1 Specifications and standards. Unless otherwise specified, the following specifications and standards of the issue listed in that issue of the Department of Defense Index of Specifications and Standards (DoDISS) specified in the solicitation form a part of this specification to the extent specified herein.

SPECIFICATIONS

FEDERAL

TT-S-735	Standard Test Fluids, Hydrocarbon
PPP-B-585	Box, Wood, Wirebound

Beneficial comments (recommendations, additions, deletions) and any pertinent data which may be of use in improving this document should be addressed to: Systems Engineering and Standardization Department (Code 93), Naval Air Engineering Center, Lakehurst, NJ 08733 by using the self-addressed Standardization Document Improvement Proposal (DD Form 1426) appearing at the end of this document or by letter.

DISTRIBUTION STATEMENT A,
APPROVED FOR PUBLIC RELEASE; DISTRIBUTION IS UNLIMITED

FSC 8135

Source: https://assist.dla.mil -- Downloaded: 2016-12-10T14:21Z
Check the source to verify that this is the current version before use.

SPECIFICATIONS (cont.)

FEDERAL

PPP-B-601	Boxes, Wood, Cleated Plywood
PPP-B-621	Box, Wood, Nailed and Lock-Corner
PPP-B-636	Box, Shipping, Fiberboard
PPP-B-640	Box, Fiberboard, Corrugated, Triple-Wall
PPP-D-723	Drum, Fiber
PPP-F-320	Fiberboard, Corrugated and Solid, Sheet Stock (Container Grade) and Cut Shapes
PPP-T-60	Tape, Packaging, Waterproof
PPP-T-76	Tape, Packaging, Paper, (for Carton Sealing)
PPP-T-97	Tape, Pressure-Sensitive Adhesive, Filament Reinforced

MILITARY

MIL-B-117	Bag, Sleeve and Tubing-Interior Packaging
MIL-S-4461	Sealing Machines, Heat, Hot Jaw and Continuous
MIL-L-10547	Liner, Case & Sheet, Overwrap, Watervaporproof or Waterproof, Flexible
MIL-S-22783	Sealing Machines, Electrical Impulse (Jaw Type)

STANDARDS

FEDERAL

FED-STD-101	Test Procedures for Packaging Materials
FED-STD-595	Color

MILITARY

MIL-STD-105	Sampling Procedures and Tables for Inspection by Attributes
MIL-STD-129	Marking for Shipment and Storage
MIL-STD-147	Palletized Unit Loads

(Copies of specifications and standards, required by manufacturers in connection with specific acquisition functions should be obtained from the contracting activity or as directed by the contracting officer.)

Source: https://assist.dla.mil -- Downloaded: 2016-12-10T14:21Z
Check the source to verify that this is the current version before use.

2.2 Other publications. The following document forms a part of this specification to the extent specified herein. The issues of the documents which are indicated as DoD adopted shall be the issue listed in the current DoDISS and the supplement thereto, if applicable.

AMERICAN SOCIETY FOR TESTING AND MATERIALS

ASTM D 3951 Standard Practice for Commercial Packaging

(Applications for copies should be addressed to the American Society for Testing and Materials, 1916 Race Street, Philadelphia, PA 19103.)

(Industry association specifications and standards are generally available for reference from libraries. They are also distributed among technical groups and using Federal agencies.)

2.3 Order of precedence. In the event of a conflict between the text of this specification and the references cited herein, the text of this specification shall take precedence.

3. REQUIREMENTS

3.1 Qualification. The barrier materials furnished under this specification shall be products which are qualified for listing on the applicable qualified products list at the time set for the opening of bids (see 4.4 and 6.4).

3.2 Material. The barrier materials shall be made from such materials and by such processes as to assure compliance with this specification.

3.3 Construction. Barrier materials shall be constructed of one or more plies in any manner which will assure compliance with the performance requirments of this specification and which will be suitable for the purpose intended.

3.4 Form. The barrier material shall be furnished in rolls or flat-cut sheets as specified in the contract or purchase order (see 6.2).

3.4.1 Rolls. When rolls are specified, the average length shall be 200 yards. The length of any individual roll shall be not less than 180 yards. Unless otherwise specified, the width of roll material shall be 36 inches plus 1/4 or minus 1/8 inch. The roll material shall be uniformly and smoothly wound on non-returnable fiber cores with a minimum inside diameter of 3 inches, with a tolerance of plus 1/8 inch and minus zero inches. The length of the core shall be equal to the width of the roll material, with a tolerance of plus 1/8 inches and minus zero inches. The core shall be of sufficient rigidity to prevent distortion of the roll under normal use and shipping conditions. Each roll shall be suitably restrained to prevent unwinding.

3.4.1.1 Splices. No roll shall contain more than 3 splices (4 pieces) and no piece shall be less than 45 yards in length. Splices within rolls shall be evenly and neatly made, the entire width of the roll material, and shall not come apart during unwinding of the roll. Rolls containing splices shall be flagged at both ends of each splice with colored markers to indicate splices within the roll. Barrier material in flat-cut sheets shall contain no splices.

Source: https://assist.dla.mil -- Downloaded: 2016-12-10T14:21Z
Check the source to verify that this is the current version before use.

3.4.2 Sheets. When flat-cut sheets are specified, the length and width shall be as specified by the procuring activity. Unless otherwise specified, length and width tolerances for cut sheets shall be plus 1/4 inch and minus 1/8 inch. Flat cut sheets shall be evenly and uniformly stacked.

3.5 Sealing. Barrier materials shall be capable of being sealed under conditions recommended by the manufacturer. These sealing conditions shall be such as are considered reasonable for production line sealing operations with respect to commonly available sealing equipment and commercially practicable fabrication time. The material shall exhibit no delamination at the sealed area when sealed under the manufacturer's recommended conditions (see 4.6).

3.6 Identification of material. The material under contract or order shall be marked with the following:

Manufacturer's name
Specification number
Type
Manufacturer's designation
Month and year of manufacture
Lot number
The notation "Seal Other Side", if applicable

The letters shall be clear, legible, and a minimum of one-eighth of an inch high. The complete markings shall be continuous lengthwise with a maximum distance of 2 inches between the groups of markings. A complete group of markings shall appear once in each 18 inches of width of the roll. The color of the markings shall be blue, approximating chip number 15177 of FED-STD-595 with the gloss requirement not necessary. Each roll or package (flat-cuts) of barrier material shall include a tag secured to the core of rolls, or sheet inserted in the package of sheets, with the sealing conditions as furnished by the manufacturer to be used as a guide by users for satisfactory sealing. The tag or sheet shall be visible upon opening the unit package.

3.7 Physical properties. The physical properties of the barrier materials shall conform to the requirements specified in Table I, when tested as specified in Section 4.

3.8 Workmanship. The barrier material shall be manufactured in a manner to provide uniform construction; free from holes, tears, cuts, sharp wrinkles or other imperfections which might impair its usefulness for the purpose intended. The barrier materials shall be trimmed of any selvage and the finished product shall conform to the levels of quality established herein.

4. QUALITY ASSURANCE PROVISIONS

4.1 Responsibility for inspection. Unless otherwise specified in the contract or purchase order, the contractor is responsible for the performance of all inspection requirements as specified herein. Except as otherwise specified in the contract or purchase order, the contractor may use his own or any other facilities suitable for the performance of the inspection requirements specified herein, unless disapproved by the Government. The Government reserves the right to perform any of the inspections set forth in the specification where such inspections are deemed necessary to assure supplies and services conform to prescribed requirements.

Source: https://assist.dla.mil -- Downloaded: 2016-12-10T14:21Z
Check the source to verify that this is the current version before use.

4.2 Classification of inspections. The inspection requirements specified herein are classified as follows:

a. Qualification inspection (see 4.4).

b. Quality conformance inspection (see 4.5).

4.3 Inspection conditions. Unless otherwise specified, the tests and examinations of this specificaton shall be made under atmospheric conditions; 50 ± 5 percent relative humidity and 73 ± 3.5°F. Material will be considered in moisture equilibrium with the atmosphere after an exposure of 24 hours to the above conditions.

4.4 Qualification inspection. Qualification inspection shall consist of all the tests of this specification (see 4.7).

4.4.1 Conditional acceptance. Conditional acceptance shall be granted prior to approval of the storage stability test (see 4.7.7) provided that all of the remaining tests in this specification are passed.

4.4.2 Qualification sample. Qualification inspection samples shall consist of a roll of barrier material approximately 50 yards long and 36 inches wide of each type of material upon which qualification is desired. The samples shall be accompanied by a complete test report showing the results of the manufacturer's tests, and a brief description of the components or raw materials used in the manufacture of the barrier material. Information shall be furnished, including address(es) of the plant(s) in which the barrier material is, or will be, manufactured. If more than one address is listed, a certificate of equivalence of other plants to the plant in which the sample was manufactured must be furnished. The sample shall be forwarded to the Naval Air Development Center, Aircraft and Crew Systems Technology Directorate (Code 6061), Warminster, PA 18974. Samples shall be plainly identified by securely attached durable tags marked with the following information:

Sample for Qualification Inspection
BARRIER MATERIALS, TRANSPARENT, FLEXIBLE, HEAT-SEALABLE
Manufacturer's Name
Manufacturer's Code No.
Type
Date of manufacture (month and year)
Submitted by (name) (date) for qualification
inspection in accordance with requirements of
MIL-B-22191D under authorization (reference
authorizing letter)

4.4.3 Retention of qualification. The retention of qualification of products approved for listing on the Qualified Products List (QPL) shall be maintained by periodic verification to determine compliance of the qualified product with the requirements of this specification. Unless otherwise specified by the activity responsible for the Qualified Products List, periodic verification shall be by certification and such certification shall be at intervals of not more than two years.

Source: https://assist.dla.mil -- Downloaded: 2016-12-10T14:21Z
Check the source to verify that this is the current version before use.

4.5 Quality conformance inspection. Quality conformance inspection shall consist of all the tests in Table II and the examinations described in 4.5.3.

4.5.1 Lot formation. An inspection lot for examinations and tests shall consist of all material of the same type, manufactured by the same process, from the same components, by one manufacturer and submitted for delivery at one time.

4.5.2 Sampling. Sampling for inspection shall be in accordance with the provisions set forth in MIL-STD-105, except where otherwise indicated.

4.5.3 Inspection of the end item.

4.5.3.1 Examination of the end item. The examination of the end item shall be in accordance with the classification of defects at the inspection levels and acceptable quality levels (AQLs) set forth in paragraph 4.5.3.1.6. For purposes of determining the sample size in accordance with MIL-STD-105, the lot size shall be expressed in units of rolls or packages of sheets, as applicable, for examinations under 4.5.3.1.1 through 4.5.3.1.4 inclusive, and in units of shipping containers for examination under 4.5.3.1.5.

4.5.3.1.1 Examination of the end item for defects in appearance, construction, and workmanship. For examination of defects within rolls, the sample unit of product shall be two yards full width of roll. For examination of sheets, the sample unit shall be two sheets randomly selected from a package. No more than five sample units, randomly selected, shall be drawn from any one roll or package of sheets, as applicable. Both sides of the material shall be examined. Defects of each type shall be scored only once for each occurence within each linear yard for rolls and once per sheet.

Examine	Defect
Form	Not roll or flat cut, as specified. Incorrect type of material.
Appearance	Surfaces not clean; presence of any foreign matter, dirt, sand, grit, or oil spots. (Note: Defects do not apply to outer convolution of roll.)
Workmanship	Blister, crack, cut, hole, tear, sharp crease or wrinkle, chafed spot or scuff mark. (Note: Defects do not apply to outer convolution of roll.) Evidence of delamination or embrittlement. Edges not clean cut; ragged, crushed, or uneven edges.

Source: https://assist.dla.mil -- Downloaded: 2016-12-10T14:21Z
Check the source to verify that this is the current version before use.

Examine	Defect
Construction	Not uniform; layer or section missing, any selvage.
Identification markings	Illegible, incorrect, incomplete, or omitted. Group of markings over 2 inches apart. Markings less than 1/8 inches high. Parallel rows do not appear once in each 18 inches of width of roll. Color not blue as specified.

4.5.3.1.2 Examination of the end item for defects in general construction. The sample unit for this examination shall be one roll or one package of sheets, as applicable.

Examine	Defect
Assembly of sheets	Not evenly and uniformly stacked; sheet containing manufacturer's instructions for sealing conditions of material not visible upon opening package. Adjacent sheets stick together to the extent that separation causes tearing or injury to any surface. Splice within sheet.
Assembly of roll	Not suitably restrained to prevent unwinding. Material not wound uniformly and smoothly on roll causing soft or uneven edges or telescoping of roll. Material not wound on a rigid fiber core; core broken, collapsed, crushed or multilated.
Unwinding of roll (check both sides)	When unwound, material sticks together to the extent that unrolling causes tearing or injury to any surface. Material wound unevenly causing wrinkles, sharp creases or folds within the roll. Roll not continuous; more than 3 splices (4 pieces) in roll or more than 1 splice in any 45 consecutive yards. Splice(s) not evenly and neatly made; does not cover entire width of material; comes apart during unwinding of roll. Manufacturer's instructions for sealing conditions of the material not securely attached to core of roll.

Source: https://assist.dla.mil -- Downloaded: 2016-12-10T14:21Z
Check the source to verify that this is the current version before use.

4.5.3.1.3 Examination of the end item for dimensional defects. The sample unit for this examination shall be one roll or one package of sheets, as applicable.

Examine	Defect
Sheets	Length or width varies by more than minus 1/8 inch or plus 1/4 inch from dimensions specified.
Rolls	
Width	Varies by more than plus 1/4 inch or minus 1/8 inch from width specified.
Core	Length less than width of roll material, or greater by more than plus 1/8 inch. Inside diameter less than 3 inches or greater than 3-1/8 inches.

4.5.3.1.4 Examination of the end item for length per roll or count per package. The sample unit for this examination shall be one roll or one package of sheets, as applicable.

Examine	Defect
Rolls	Average length per roll less than specified. Length of any individual roll less than 180 yards.
Sheets	Average count of sheets per unit package less than specified.

4.5.3.1.5 Examination of packaging. An examination shall be made to determine that packaging complies with the requirements of Section 5 of this specification. The sample unit shall be one shipping container, fully packaged, selected just prior to the closing operation. Shipping containers fully prepared for delivery shall be examined for closure defects.

Examine	Defect
Preservation (as applicable)	Not level specified; not in accordance with contract requirements. Flat sheets not unit packaged and wrapped as specified; fiberboard pad(s) omitted from top or bottom of stack, or not of size sufficient to protect sheets; strapping or ties not applied in manner specified. Material not as specified; closures not accomplished by specified or required methods of materials.

Source: https://assist.dla.mil -- Downloaded: 2016-12-10T14:21Z
Check the source to verify that this is the current version before use.

Examine	Defect
Packing	Not level specified; not in accordance with contract requirements. Rolls not packed in fiber drums, as specified. Arrangement or number of rolls or unit packages of sheets per container not in accordance with requirements. Container material not as specified; closures not accomplished by specified or required methods or materials.
Markings	Interior or exterior markings (as applicable) illegible, incorrect, omitted, or not in accordance with requirements. Precautionary markings omitted or not as specified.
Weight	Weight exceeds requirements of container specification.

4.5.3.1.6 Inspection levels and acceptable quality levels (AQLs) for examination. The inspection levels for determining the sample size and the AQLs expressed in defects per 100 units, shall be as follows:

Examination Paragraph 1/	Inspection Level	AQL
4.5.3.1.1	I	6.5
4.5.3.1.2	S-4	10
4.5.3.1.3	S-4	10
4.5.3.1.4 2/	S-4	10
4.5.3.1.5	S-4	10

1/ The sample rolls, sheets or packages of sheets (as applicable) of the specified class of material shall be as used for examination under 4.5.3.1.1 through 4.5.3.1.4 inclusive. The yardage or sheets used for examinations under 4.5.3.1.1 and the rolls, sheets or packages of sheets used for examinations under 4.5.3.1.3 and 4.5.3.1.4 shall be within the rolls or packages of sheets randomly selected under 4.5.3.1.2.

2/ For average length, acceptance number zero.

4.6 Sealing instructions for qualification and quality conformance testing.

a. Heat seals for test purposes shall be a minimum of 1/2 inch wide and shall be effected on a jaw-type heat-sealer conforming to MIL-S-4461, Type I Class B, or Type II Class A Styles 1, 2, 3, or 4 utilizing the sealing conditions recommended by the manufacturer. The upper sealing conditions reasonable for production line sealing operations with respect to commonly available sealing equipment and commercially practical fabrication time are a temperature setting of 525°F, a 3 second dwell time and a pressure of 60 pounds per square inch.

Source: https://assist.dla.mil -- Downloaded: 2016-12-10T14:21Z
Check the source to verify that this is the current version before use.

b. Impulse seals for test purposes shall be a minimum of 1/16 inch wide and shall be effected on impulse type sealers conforming to MIL-S-22783. The upper sealing limits on this type sealer shall be sufficiently high to effect a satisfactory seal and not cause thinning at the inside edges of the seal.

c. In the securing of the three 1 inch seam strength specimens from their respective samples (see 4.7.2.2.1) care should be taken that the specimens are not removed:

(1) From points in the sealed samples where seal overlapping has occured.

(2) From points in the sealed sample which were within 1 inch of either end of the sealer jaw during the sealing operation.

4.7 Tests.

4.7.1 Test methods. The tests indicated below shall be conducted in accordance with the specified methods of FED-STD-101 (See tables I and II).

Test	FED-STD-101 Method No.	Special Requirements or Exception Notes
Thickness	1003	
Water Resistance of Markings	3027	1/
Water Vapor Transmission Rate (Type I only)		
Room temperature flexing		
Flexing procedure	2017	
Transmission Rate procedure	3030 Procedure A (1)	
Water Vapor Transmission Rate (Type I only)		
Low temperature flexing		2/
Flexing procedure	2017	
Transmission rate procedure	3030 Procedure A (1)	
Resistance to Blocking	3003 Procedure D	
Resistance to curl	2015	
Contact Corrosivity	3005	3/
Oil Resistance (multi-ply materials only)	3015	4/
Puncture Resistance	2065	5/
Transparency	4034	

Source: https://assist.dla.mil -- Downloaded: 2016-12-10T14:21Z
Check the source to verify that this is the current version before use.

Notes

1/ Three specimens shall be tested, each one containing a complete set of markings.

2/ Conduct tests as in Method 2017 except that only as received specimens shall be tested. Prior to flexing, test specimens shall be conditioned for at least 30 minutes at -20° ± 2°F and the flexing operation shall be conducted at -20° ± 2°F.

3/ Corrosion in the intermediate area shall not invalidate the test nor be cause for rejection. The barrier material shall be evaluated individually and results reported on each material in triplicate. The test shall be repeated if one or more of the three specimens tested shows a light or incipient corrosion or if corrosion is evident in the blank area.

4/ Both oils conforming to TT-S-735, Type 6 (ASTM Oil No. 3) and di-2 ethylhexylsibacate (see 6.5) synthetic base oil shall be used. Six specimens shall be used.

5/ Elongation test data not required.

4.7.2 Seam Strength.

4.7.2.1 Seam strength sampling. Six by twelve inch samples used for this test shall be selected from the test material as shown in Figure 1. Samples shall be drawn in duplicate.

4.7.2.2. Seam strength (as received).

4.7.2.2.1 Preparation of test specimens. The sections for this test shall be selected from Figure 1, Key 1 and shall be folded in half with the crease parallel to the long axis. The open or unfolded length shall be sealed. One set of specimens shall be heat sealed and the other set shall be impulse sealed. The sealed areas shall be defined by a line drawn on the back of the specimens. The line shall be drawn along the sealer jaw with a sharp No. 2B graphite pencil. The folded length shall be cut to a depth of 1/2 inch. From each of the six sections, three adjacent 1 inch wide specimens shall be cut perpendicular to the seam (see 4.6). One of the specimens from each section shall be used for test at room temperature (73°F), one from each section for test at 100°F, and the remaining one from each section for test at 160°F. After sealing and prior to the application of the specified weights, the specimens in all cases shall be exposed for one hour to the atmospheric conditions specified in 4.3.

4.7.2.2.2 Test at room temperature (73°F). The twelve one-inch wide specimens selected for this test (see 4.7.2.2.1) shall be opened and one end of each specimen shall be clamped so that the other end of the specimen hangs freely. A 3-1/2 pound weight shall then be gently attached to the free end of the specimen so as not to impact load the seal. The weight shall be allowed to act for 5 minutes, whereupon the weight shall be removed and the specimen examined for separation of the sealed faces. Any evidence of delamination of one ply away from the other in the sealed area shall be cause for rejection. The evaluation shall be limited to the sealed area defined in 4.7.2.2.1.

Source: https://assist.dla.mil -- Downloaded: 2016-12-10T14:21Z
Check the source to verify that this is the current version before use.

4.7.2.2.3 Test at 100°F. The twelve one-inch wide specimens selected for this test (see 4.7.2.2.1) shall be tested as per room temperature except that specimens shall be clamped in a forced draft circulating air oven maintained at 100 ± 2°F with a weight of 2 pounds acting on the free end of the specimen for one hour. The rate of air circulation shall be held to the minimum required to maintain uniform temperature throughout the oven. In no case shall the rate of air circulation be such as to cause any movements of the weighted specimens. The weights shall be attached after the specimens and test clamp fixtures have been placed in the oven and shall be removed prior to taking the specimen from the oven in order to avoid excessive loading due to swaying action. After one hour the weight shall be removed and the specimen examined for separation of the sealed faces. Any evidence of delamination of one ply away from the other in the sealed area defined in 4.7.2.2.1 shall be cause for rejection.

4.7.2.2.4 Test at 160°F. The twelve one-inch wide specimens selected for this test (see 4.7.2.2.1) shall be tested as per the 100°F test except that the weight shall be 10 ounces and the temperature shall be 160 °F. The rate of air circulation shall be held to the minimum required to maintain uniform temperature throughout the oven. In no case shall the rate of air circulation be such as to cause any movement of the weighted specimens.

4.7.2.3 Seam strength (sealed before aging).

4.7.2.3.1 Test specimens. Prepare the test specimens as described in 4.7.2.2.1 this time using Key 2 (Figure 1). After sealing, the samples shall be aged in a circulating air oven maintained at 160° ± 2°F for twelve consecutive days (288 hours). After aging, 1-inch wide specimens as described in 4.7.2.2.1, shall be cut from the sections to be tested at room temperature (73°F), 100°F and 160°F.

4.7.2.3.2. Test at room temperature. The twelve one-inch specimens selected for this test (see 4.7.2.3.1) shall be tested as specified in 4.7.2.2.2.

4.7.2.3.3 Test at 100°F. The twelve one-inch specimens selected for this test (see 4.7.2.3.1) shall be tested as specified in 4.7.2.2.3.

4.7.2.3.4 Test at 160°F. The twelve one-inch specimens selected for this test (see 4.7.2.3.1) shall be tested as specified in 4.7.2.2.4.

4.7.2.4 Seam strength (sealed after aging).

4.7.2.4.1 Test specimens. The sections for this test (Fig. 1, Key 3), in the flat unsealed condition as taken from the sample roll, shall be aged in a circulating air oven maintained at 160° ± 2°F for 12 consecutive days (288 hours). After removal from the oven the unsealed sections shall be allowed to come to room temperature. Test specimens shall then be obtained as described in 4.7.2.2.1.

4.7.2.4.2 Test at room temperature. The twelve one-inch wide specimens selected for this test (see 4.7.2.4.1) shall be tested as specified in 4.7.2.2.2.

Source: https://assist.dla.mil -- Downloaded: 2016-12-10T14:21Z
Check the source to verify that this is the current version before use.

4.7.2.4.3 Test at 100°F. The twelve one-inch wide specimens selected for this test (see 4.7.2.4.1) shall be tested as specified in 4.7.2.2.3.

4.7.2.4.4 Test at 160°F. The twelve one-inch wide specimens selected for this test (see 4.7.2.4.1) shall be tested as specified in 4.7.2.2.4.

4.7.3 Seam fabrication. Four pouches sealed in accordance with the manufacturer's recommended sealing conditions shall be fabricated from the barrier material. Each pouch shall be prepared by cutting four specimens; two 2 1/2 by 5 1/2 inch pieces and two 5 1/2 by 5 1/2 inch pieces. The pouch shall be fabricated by sealing in conformance with Figure 2. Firstly, the intermediate butt seals shall be made. The butt seals shall be folded flat and the bottom seal shall be made. Finally, the sides of the pouch shall be sealed.

4.7.3.1 Procedure. A water solution containing 1 percent Aerosol O.T. (see 6.5) or equivalent and sufficient dye to produce a distinct color shall be poured into each pouch to a level of two inches (above the top of the bottom seal). The pouches shall then be suspended. After a period of 15 minutes at room temperature, the pouches shall be examined for dye leakage at all seams and especially at all double seam junctions, i.e. the points where the vertical seams intersect the bottom seam at points other than at the corners of the pouch.

4.7.4 Waterproofness (Type II and Type III). Prepare test specimens (unaged samples only) according to method 2017 of FED-STD-101. Prior to the flexing process, the test specimens shall be conditioned for at least 30 minutes at -20 ± 2°F. The flexing operation shall then be performed at -20 ± 2°F.

4.7.4.1 Procedure. After flexing the specimen, the sleeve shall be removed, allowed to come to room temperature (73°F) and dried by wiping with absorbent material or by placing in a circulating air oven maintained at 160°F for ten minutes. The sleeve shall then be made into a pouch by sealing one of the open ends. A quantity of shredded absorbent paper sufficient to fill the pouch shall be placed inside the pouch which in turn shall be placed in a water solution containing 1 percent Aerosol O.T. (see 6.5) and methyl violet for ten minutes. The pouch shall then be removed, wiped dry, and the shredded absorbent paper examined for dye stain.

4.7.5 Resistance to aging (multi-ply materials only). Three specimens, 36 by 6 inches, cut from across the roll of material, at points at least 1 yard apart shall be used for this test.

4.7.5.1 Procedure. The specimens shall be subjected to the following aging cycle:

8 hours in a humidity chamber at 100 ± 2°F and 90 to 95 percent relative humidity.

16 hours in a circulating air oven at 160 ± 2°F.

Source: https://assist.dla.mil -- Downloaded: 2016-12-10T14:21Z
Check the source to verify that this is the current version before use.

The aging cycle shall be repeated on every week day, Monday through Friday. The specimens shall remain in the circulating air oven maintained at the conditions described above on Saturday, Sunday and holidays, except that holidays shall not exceed a total of two days over the entire aging period. The aging procedure shall continue for fourteen consecutive days. The specimens shall be folded loosely, hung, rolled loosely or laid flat in the test chamber during the aging period. At the conclusion of the aging period the specimens shall be returned to room temperature and examined, particularly at all edges, for delamination brought about by the aging exposure. No supplemental attempt to delaminate the material, such as prying or picking at the plies, shall be carried out. For the purpose of this test, delamination shall be defined as ply separation at any given point extending in more than 1/2 inch from the edge with an edge length separation greater than one inch.

4.7.6 Marking abrasion resistance.

4.7.6.1 Preparation of test specimens. Strips of material 3 inches wide shall be cut so that the amount of printing shall be a maximum. The length shall be sufficient so that after a bifold seam is formed and stapled, the resultant strip shall be 3 inches wide by 18 inches long (see Figure 3).

4.7.6.2 Procedure. The test bar shall be a hollow 5052 aluminum 1-1/2" diameter tube with a number 63 finish. The strip will be hung over the bar with a .9 ± .05 lb weight attached to one end (Figure 3). The side with the print shall be in contact with the bar. The other end shall be pulled (stroked) at a rate of 50 to 70 strokes per minute for one minute. The stroke length shall be 13 to 16 inches. The angle of pull (stroke) shall be from 0° to 45°. The strip shall be removed and the weight detached. The printing shall be examined for legibility, smear and blurring.

4.7.7 Storage stability. After one year of sheltered storage at 75 ± 2°F and 50 ± 5 percent R.H., a roll of material (or package of sheets, if applicable) shall be tested for conformance to the requirements of the following tests:

Seam strength at room temperature (no accelerated aging required)

Oil resistance (multi-ply materials only)

Transparency (accelerated aging not required)

Watervapor transmission rate (Type I only) (after room temperature flexing) (as received and aged)

5. PACKAGING

5.1 Preservation. Preservation shall be Level A or Commercial, as specified (see 6.2).

5.1.1 Level A.

5.1.1.1 Rolls. Each roll, wound on a core as required in paragraph 3.4.1, requires no additional preservation.

Source: https://assist.dla.mil -- Downloaded: 2016-12-10T14:21Z
Check the source to verify that this is the current version before use.

5.1.1.2 Flat cuts. Bundles of flat cuts shall be placed in fiberboard boxes conforming to PPP-B-636, weather resistant class. In lieu of closure and waterproofing requirements in the Appendix of PPP-B-636, closure and waterproofing of weather resistant boxes shall be accomplished by sealing all seams, corners and manufacturer's joints with waterproof tape, 2 inches minimum width, conforming to PPP-T-60 or PPP-T-76. Banding (reinforcement requirements) shall be applied in accordance with the Appendix to PPP-B-636, using nonmetallic or tape banding only.

5.1.1.3 Alternate method for flat cuts. When specified (see 6.2), flat cuts of material shall be packaged in bundles having a maximum weight of 50 pounds and shall be sandwiched between two fiberboard pads confroming to PPP-F-320, weather resistant class. Bundles shall be tied or otherwise secured with flat steel bands, plastic strapping, fiber-twine or rope, two in each direction, of strength to assure safe arrival of the bundle. The fiberboard pads shall be of a size commensurate with the size of the flat cuts so as to prevent damage to the barrier material during the banding operation, particularly on the edges.

5.1.2 Commercial. Rolls and flat cuts shall be preserved in accordance with ASTM D 3951. Unit pack weight limits may be exceeded when the rolls exceed the specified weight limit.

5.2 Packing. Packing shall be Level A, B or Commercial, as specified (see 6.2).

5.2.1 Level A.

5.2.1.1 Rolls. Each roll of material, preserved as specified in 5.1 shall be packed in a fiber drum conforming to PPP-D-723, Type II, Grade D. Drum closure shall be sealed with three-inch wide, waterproof, pressure-sensitive tape conforming to PPP-T-60 or PPP-T-76. Unless otherwise specified, two or more drums shall be overpacked in wirebound wood, cleated plywood or nailed wood boxes conforming to PPP-B-585, Class 3; PPP-B-601, Overseas Type or PPP-B-621, Class 2, respectively (see 6.2).

5.2.1.2 Flat cuts. Flat cuts preserved in weather resistant fiberboard boxes (5.1.1.2) or bundled (5.1.1.3), shall be packed directly in wirebound wood, cleated plywood or nailed wood boxes conforming to PPP-B-585, Class 3; PPP-B-601, Overseas Type or PPP-B-621, Class 2. When wirebound wood, cleated plywood or nailed wood boxes are used for sandwiched bundles, they shall be lined with a waterproof case liner conforming to MIL-L-10547 and sealed in accordance with the appendix thereto.

5.2.1.3 Unit loads. When specified, fiber drums and boxes shall be palletized in accordance with MIL-STD-147, Type XIII and Type I, respectively.

5.2.2 Level B.

5.2.2.1 Rolls. Each roll of material shall be packed as specified for Level A in 5.2.1.1, except that drums shall conform to PPP-D-723, Type I, Grade D. Closure shall be sealed with three-inch wide reinforced tape conforming to PPP-T-97 or equivalent.

Source: https://assist.dla.mil -- Downloaded: 2016-12-10T14:21Z
Check the source to verify that this is the current version before use.

5.2.2.2 Flat cuts. Bundles of flat cuts, preserved in weather resistant fiberboard boxes, will require no further packing.

5.2.2.2.1 Alternate method for flat cuts. When specified, bundles of flat cuts shall be packed as specified for Level A in 5.2.1.2, except that shipping containers shall conform to PPP-B-585, Class 2; PPP-B-601, Domestic Type PPP-B-621, Class 2; PPP-B-636, Grade V3C; or PPP-B-640, Class 2, Style E.

5.2.2.3 Unit loads. When specified, fiber drums and boxes shall be palletized in accordance with MIL-STD-147, Type XIII and Type I, respectively.

5.2.3 Commercial. Rolls and flat cuts shall be packed in accordance with ASTM D 3951. Unit pack weight limits may be exceeded when rolls exceed the specified weight limit.

5.3 Marking. All individual packages and shipping containers shall be marked for shipment in accordance with MIL-STD-129 and as follows:

BARRIER MATERIALS, TRANSPARENT, FLEXIBLE, HEAT SEALABLE
Specification MIL-B-22191D
Type of material
Size - Nominal net lineal yardage of roll or dimensions of flat cuts (net lineal yardage is the number of yards of usable material in the roll)
Name and address of manufacturer
Month and year of manufacture
Lot number

5.3.1 Precautionary marking. The following marking shall appear on at least one side and, wherever practicable, on two sides of each drum or box in letters not less than 3/4 inches high:

"Keep Cool and Dry"

6. NOTES

6.1 Intended use. The transparent flexible materials of this specification are intended for use in the packaging of items such as small aeronautical, missile, rocket components and similar parts or assemblies destined for storage on land or aboard ships. These materials are suitable for the fabrication of bags in accordance with MIL-B-117. These materials also afford protection from solid contamination.

6.1.1 Type I . This material is intended to be used for packaging applications where watervaporproof and greaseproof characteristics are required.

6.1.2 Type II. This material is intended to be used for packaging applications where waterproof and greaseproof characteristics are required.

6.1.3 Type III. This material is intended to be used for packaging applications where a waterproof characteristic is required.

Source: https://assist.dla.mil -- Downloaded: 2016-12-10T14:21Z
Check the source to verify that this is the current version before use.

6.2 Ordering data. Requests, requisitions, schedules and contracts or orders should specify the following:

a. Title, number and date of this specification.
b. Type of material (see 1.2).
c. Quantity
d. Form (see 3.4) (if flat cuts, specify width and length).
e. Levels of preservation and packing (see 5.1 and 5.2)
f. If overpacking of fiber drums is not required (see 5.2.1.1).
g. Alternate method for flat cuts, if desired (see 5.1.1.3).
h. Palletization, if desired (see 5.2.2.3).

6.3. Heat-seals. It is not intended that the operating temperature of heat-sealing equipment be limited to 525°F or less. While equipment may be operated at temperatures exceeding 525°F to accomplish a satisfactory seal, the barrier material must also be capable of being heat-sealed at temperatures of 525°F or less.

6.4 Qualification. With respect to products requiring qualification, awards will be made only for products which are, at the time set for opening of bids qualified for inclusion on the Qualified Products List whether or not such products have actually been so listed by that date. The attention of the contractors is called to these requirements and manufacturers are urged to arrange to have the products that they propose to offer to the Government tested for qualification in order that they may be eligible to be awarded contracts or purchase orders for the products covered by this specification. The activity responsibe for the Qualified Products List is the Naval Air Engineering Center, Lakehurst, NJ 08733; however, information pertaining to qualification of products may be obtained from tha Naval Air Development Center, Aircraft & Crew Systems Technology Directorate, Code 6061, Warminster, PA 18974.

6.5 Source of material. The materials called out in 4.7.1, 4.7.3.1 and 4.7.4.1 may be obtained from the following sources:

Material	Sources
Di-2 ethylhexylsebacate (Multiplex DOS)	The C.P. Hall Company 7300 South Central Avenue Chicago, Illinois 60638
Aerosol O.T.	American Cyanamid Bound Brook, NJ

Source: https://assist.dla.mil -- Downloaded: 2016-12-10T14:21Z
Check the source to verify that this is the current version before use.

6.6 Changes from previous issue. Asterisks are not used in this revision to identify changes with respect to the previous issue due to the extensiveness of the changes.

Custodians:
Army - GL
Navy - AS
Air Force - 69

Review activities:
Army - ME, SM, MI, EA
Navy - OS, SH, SA, YD
Air Force - 84, 99
DLA -ES

User activities:
Army - AT
Navy - MC
DLA- SS

Preparing activity:
Navy - AS
(Project No. 8135-0568)

Source: https://assist.dla.mil -- Downloaded: 2016-12-10T14:21Z
Check the source to verify that this is the current version before use.

TABLE I. Physical Properties

Property	Requirements (Types I, II and III)	Paragraph Reference
Thickness	0.006 inch (max)	4.7.1
Water resistance of markings	Markings shall be clear and legible	4.7.1
Transparency As received and After aging 12 days at 160°F	Read lettering 3 inches behind material	4.7.1
Watervapor transmission rate (Type I only) (gm/100 sq in/24 hrs)		
1. After room temperature flexing (as received)	0.03 (max)	4.7.1
2. Aged then room temperature flexed	0.03 (max)	4.7.1
3. After low temperature flexing (as received)	0.03 (max)	
Blocking resistance	No blocking, delamination or rupture	4.7.1
Resistance to Curl	Shall not curl in excess of 5% or curl back on itself	4.7.1
Contact corrosity	No corrosion, etching or pitting in contact area	4.7.1
Oil resistance (multi-ply materials only)	No leakage, swelling, delamination or embrittlement	4.7.1
Puncture resistance Type I Type II Type III	Minimum force of: 10.0 lbs 8.0 lbs 6.0 lbs	4.7.1
Seam strength As received At room temperature, 100°F and 160°F	No separation	4.7.2.2
Sealed before aging At room temperature, 100°F and 160°F	No separation	4.7.2.3

Source: https://assist.dla.mil -- Downloaded: 2016-12-10T14:21Z
Check the source to verify that this is the current version before use.

TABLE I. Physical Properties (Cont.)

Property	Requirements (Types I, II and III)	Paragraph Reference
Seam strength sealed after aging At room temperature, 100°F and 160°F	No separation	4.7.2.4
Seam fabrication	No leakage at double seam junction	4.7.3
Waterproofness (Type II and Type III)	No dye penetration	4.7.4
Aging resistance	No delamination as defined in paragraph 4.7.6	4.7.5
Marking abrasion resistance	No extensive smearing or blurring	4.7.6
Storage stability	After storage material shall conform to the requirements as specified	4.7.7

Source: https://assist.dla.mil -- Downloaded: 2016-12-10T14:21Z
Check the source to verify that this is the current version before use.

TABLE II. Quality Conformance Tests
(for requirements, see Table I)
(for applicable types, see Table I)

Property	Paragraph Reference
Water resistance of markings	4.7.1
Transparency	4.7.1
Watervapor transmission rate as received	4.7.1
Blocking resistance	4.7.1
Oil resistance	4.7.1
Puncture resistance	4.7.1
Seam strength as received sealed before aging sealed after aging	4.7.2
Seam fabrication	4.7.3
Waterproofness (Type II and Type III)	4.7.4
Resistance to Curl	4.7.1

Source: https://assist.dla.mil -- Downloaded: 2016-12-10T14:21Z
Check the source to verify that this is the current version before use.

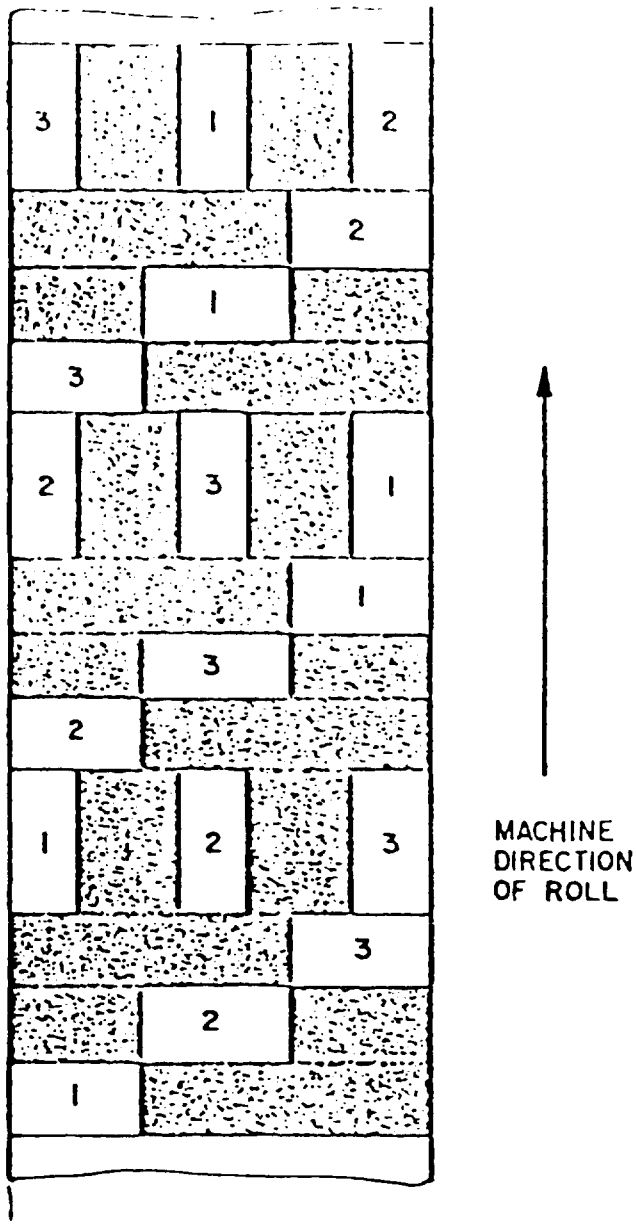

KEY

1 - 6 inch by 12 inch sample for "As Received" testing
2 - 6 inch by 12 inch sample for "Sealed Before Aging" testing
3 - 6 inch by 12 inch sample for "Sealed After Aging" testing

Figure 1. Sampling method for seam strength test.

Source: https://assist.dla.mil -- Downloaded: 2016-12-10T14:21Z
Check the source to verify that this is the current version before use.

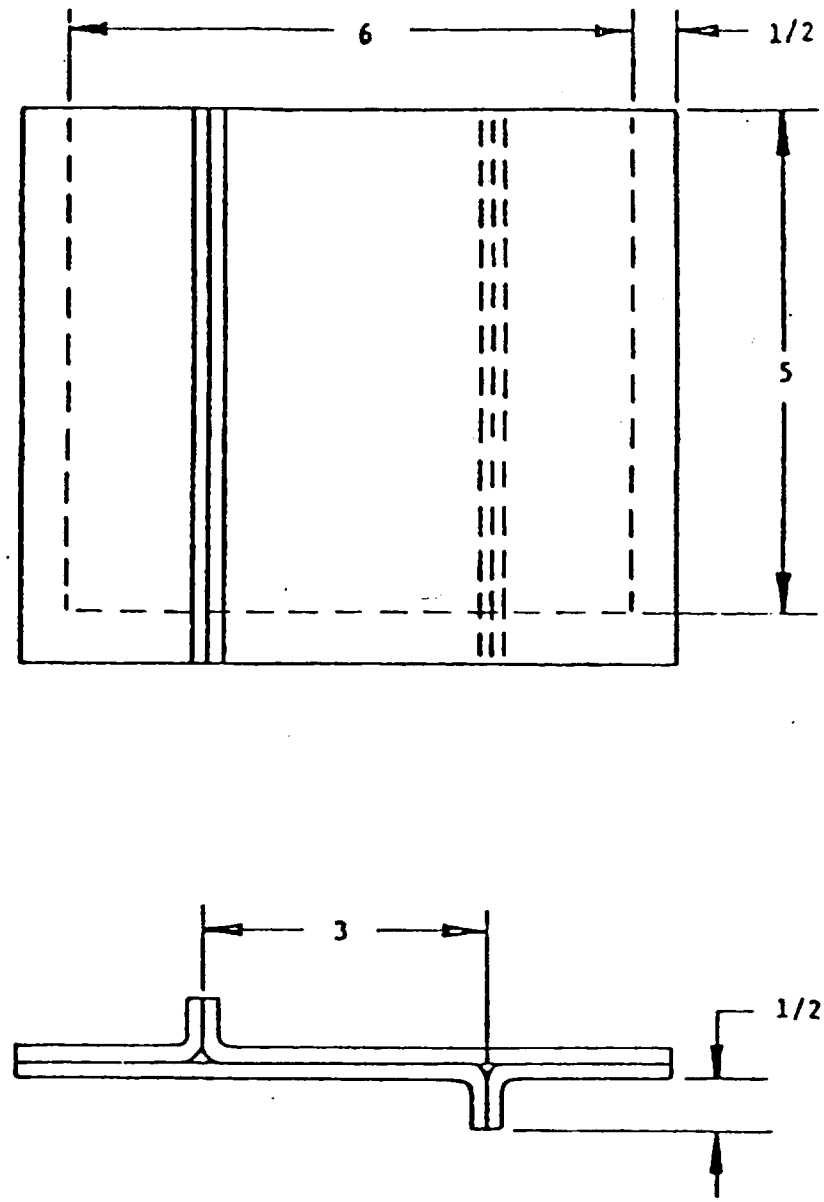

DIMENSIONS IN INCHES

Figure 2. Pouch for seam fabrication test.

Source: https://assist.dla.mil -- Downloaded: 2016-12-10T14:21Z
Check the source to verify that this is the current version before use.

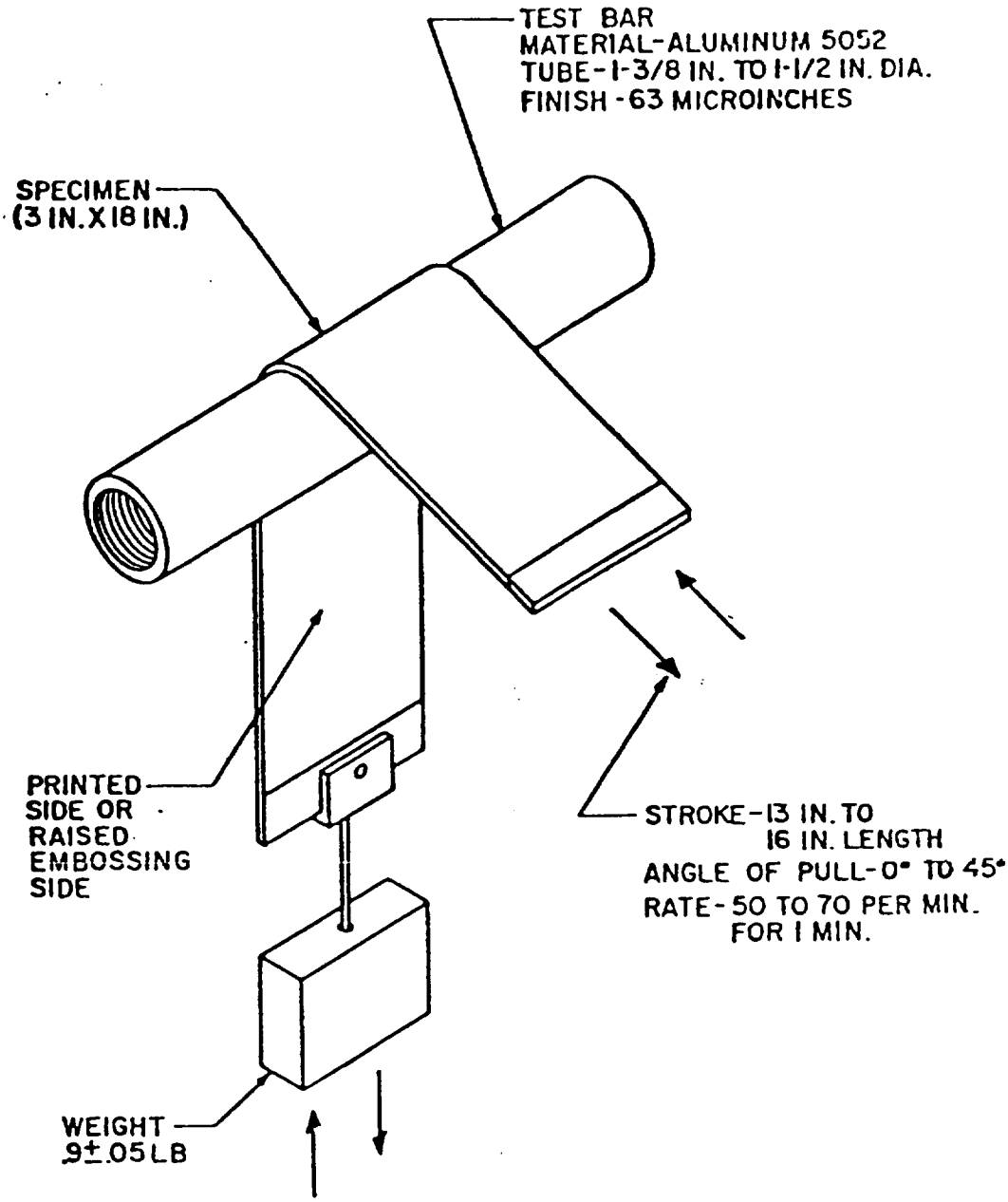

Figure 3. Apparatus for testing identification marking abrasion resistance.

U.S. GOVERNMENT PRINTING OFFICE: 1988 - 506-038/22648

Source: https://assist.dla.mil -- Downloaded: 2016-12-10T14:21Z
Check the source to verify that this is the current version before use.

INSTRUCTIONS: In a continuing effort to make our standardization documents better, the DoD provides this form for use in submitting comments and suggestions for improvements. All users of military standardization documents are invited to provide suggestions. This form may be detached, folded along the lines indicated, taped along the loose edge *(DO NOT STAPLE)*, and mailed. In block 5, be as specific as possible about particular problem areas such as wording which required interpretation, was too rigid, restrictive, loose, ambiguous, or was incompatible, and give proposed wording changes which would alleviate the problems. Enter in block 6 any remarks not related to a specific paragraph of the document. If block 7 is filled out, an acknowledgement will be mailed to you within 30 days to let you know that your comments were received and are being considered.

NOTE: This form may not be used to request copies of documents, nor to request waivers, deviations, or clarification of specification requirements on current contracts. Comments submitted on this form do not constitute or imply authorization to waive any portion of the referenced document(s) or to amend contractual requirements.

(Fold along this line)

(Fold along this line)

DEPARTMENT OF THE NAVY

COMMANDER
NAVAL SEA SYSTEMS COMMAND (SEA 55Z3)
DEPARTMENT OF THE NAVY
WASHINGTON, DC 20362-5101

NO POSTAGE NECESSARY IF MAILED IN THE UNITED STATES

OFFICIAL BUSINESS
PENALTY FOR PRIVATE USE $300

BUSINESS REPLY MAIL
FIRST CLASS PERMIT NO. 12503 WASHINGTON D C

POSTAGE WILL BE PAID BY THE DEPARTMENT OF THE NAVY

COMMANDER
NAVAL SEA SYSTEMS COMMAND (SEA 55Z3)
DEPARTMENT OF THE NAVY
WASHINGTON, DC 20362-5101

Source: https://assist.dla.mil -- Downloaded: 2016-12-10T14:21Z
Check the source to verify that this is the current version before use.

STANDARDIZATION DOCUMENT IMPROVEMENT PROPOSAL

(See Instructions – Reverse Side)

1. DOCUMENT NUMBER	2. DOCUMENT TITLE
MIL-STD-740-1(SH)	AIRBORNE SOUND MEASUREMENTS AND ACCEPTANCE CRITERIA OF SHIPBOARD EQUIPMENT

3a. NAME OF SUBMITTING ORGANIZATION	4. TYPE OF ORGANIZATION *(Mark one)*
	☐ VENDOR
b. ADDRESS *(Street, City, State, ZIP Code)*	☐ USER
	☐ MANUFACTURER
	☐ OTHER *(Specify)*: _____

5. PROBLEM AREAS

a. Paragraph Number and Wording:

b. Recommended Wording:

c. Reason/Rationale for Recommendation:

6. REMARKS

7a. NAME OF SUBMITTER *(Last, First, MI)* – Optional	b. WORK TELEPHONE NUMBER *(Include Area Code)* – Optional
c. MAILING ADDRESS *(Street, City, State, ZIP Code)* – Optional	8. DATE OF SUBMISSION *(YYMMDD)*

DD FORM 82 MAR 1426 PREVIOUS EDITION IS OBSOLETE

Source: https://assist.dla.mil -- Downloaded: 2016-12-10T14:21Z
Check the source to verify that this is the current version before use.