The documentation and process conversion measures necessary to comply with this revision shall be completed by 1 June 1994

INCH-POUND

MIL-S-19500/433D
1 December 1993
SUPERSEDING
MIL-S-19500/433C
7 December 1990

MILITARY SPECIFICATION
SEMICONDUCTOR DEVICE, TRANSISTOR, PNP, SILICON, HIGH-POWER TYPE 2N4399 AND 2N5745 JANTX, JANTXV AND JANS

This Specification is approved for use by all Departments and Agencies of the Department of Defense.

1. SCOPE

1.1 Scope. This specification covers the detail requirements for PNP silicon, high-power transistors. Three levels of product assurance are provided for each device type as specified in MIL-S-19500.

1.2 Physical dimensions. See 3.3.

1.3 Maximum ratings. $R_{\theta JC}$ = 0.875°C/W, $R_{\theta JA}$ = 35°C/W.

	P_T 1/ T_A = +25°C	P_T 2/ T_C = +100°C	V_{CBO}	V_{CEO}	V_{EBO}	I_B	I_C	T_J and T_{STG}
	W	W	V dc	V dc	V dc	A dc	A dc	°C
2N4399	5	115	60	60	5	7.5	30	-65 to +200
2N5745	5	115	80	80	5	7.5	20	-65 to +200

1/ Derate linearly 28.57 mW/°C above T_A = +25°C.
2/ Derate linearly 1.15 W/°C above T_C = +100°C.

1.4 Primary electrical characteristics.

	h_{FE2} 1/	h_{FE2} 1/	$\|h_{FE}\|$	$V_{CE(sat)1}$ 1/		$V_{BE(sat)1}$ 1/		C_{obo}	Switching	
	V_{CE} = 2 V dc, I_C = 15 A dc	V_{CE} = 2 V dc, I_C = 10 A dc	V_{CE} = 10 V dc, I_C = 1 A dc, f = 1 MHz	I_C = 15 A dc, I_B = 1.5 A dc		I_C = 15 A dc, I_B = 1.5 A dc		V_{CB} = 10 V dc, I_E = 0, 100 kHz ≤ f ≤ 1 MHz	t_{on}	t_{off}
	2N4399	2N5745	V dc	2N4399 V dc	2N5745 V dc	2N4399	2N5745	pF	µs	µs
Min	25	25	4							
Max			40	1.0	1.5	1.8	2.0	1000	1.2	2.5

1/ Pulsed (see 4.5.1).

Beneficial comments (recommendations, additions, deletions) and any pertinent data which may be of use in improving this document should be addressed to : Director, U.S. Army Research Laboratory , ATTN: AMSRL-EP-RD, Fort Monmouth, NJ 07703-5601 by using the Standardization Document Proposal appearing (DD Form 1426) at the end of this document or by letter.

AMSC N/A FSC 5961

DISTRIBUTION STATEMENT A. Approved for public release; distribution is unlimited.

Source: https://assist.dla.mil -- Downloaded: 2016-12-04T09:39Z
Check the source to verify that this is the current version before use.

2. APPLICABLE DOCUMENTS

2.1 Government documents.

2.1.1 Specifications, standards and handbooks. The following specifications, standards and handbooks form a part of this document to the extent specified herein. Unless otherwise specified, the issues of these documents are those listed in the issue of the Department of Defense Index of Specifications and Standards (DODISS) and supplement thereto, cited in the solicitation (see 6.2).

SPECIFICATION

MILITARY

MIL-S-19500 - Semiconductor Devices, General Specification for.

STANDARD

MILITARY

MIL-STD-750 - Test Methods for Semiconductor Devices.

(Copies of the specification and standard required by contractors in connection with specific acquisition functions should be obtained from the contracting activity or as directed by the contracting activity.)

2.2 Order of precedence. In the event of a conflict between the text of this specification and the references cited herein the text of this specification shall take precedence. Nothing in this specification, however, shall supersede applicable laws and regulations unless a specific exemption has been obtained.

3. REQUIREMENTS

3.1 Associated detail specification. The individual item requirements shall be in accordance with MIL-S-19500, and as specified herein.

3.2 Abbreviations, symbols, and definitions. Abbreviations, symbols, and definitions used herein shall be as specified in MIL-S-19500.

3.3 Design, construction, and physical dimensions. The design, construction, and physical dimensions shall be as specified in MIL-S-19500, appendix F, figure 11, T-4A.

3.3.1 Lead finish. Lead finish shall be solderable in accordance with MIL-STD-750 and MIL-S-19500.

3.4 Marking. Marking shall be in accordance with MIL-S-19500.

4. QUALITY ASSURANCE PROVISIONS

4.1 Sampling and inspection. Sampling and inspection shall be in accordance with MIL-S-19500, and as specified herein.

4.2 Qualification inspection. Qualification inspection shall be in accordance with MIL-S-19500, and as specified herein.

4.3 Screening. Screening shall be in accordance with MIL-S-19500 (table II), and as specified herein. The following measurements shall be made in accordance with table I herein. Devices that exceed the limits of table I herein shall not be acceptable.

Source: https://assist.dla.mil -- Downloaded: 2016-12-04T09:39Z
Check the source to verify that this is the current version before use.

Screen (see table II of MIL-S-19500)	Measurement	
	JANS level	JANTX and JANTXV levels
1/	Thermal response (see 4.3.2)	Thermal response (see 4.3.2)
9	I_{CEX1} and h_{FE2}	I_{CEX1}
11	I_{CEX1} and h_{FE2}; $\Delta I_{CEX1} \leq 100\%$ of initial value or 5 µA dc whichever is greater. $\Delta h_{FE2} \leq \pm 15\%$ of initial value.	I_{CEX1} and h_{FE2}; $\Delta I_{CEX1} \leq 100\%$ of initial value or 100 µA dc whichever is greater.
12	See 4.3.1	See 4.3.1
13	Subgroup 2 of table I herein; $\Delta I_{CEX1} \leq 100\%$ of initial value or 50 µA dc whichever is greater; $\Delta h_{FE2} \leq \pm 15\%$ of initial value.	Subgroup 2 of table I herein; $\Delta I_{CEX1} \leq 100\%$ of initial value or 100 µA dc whichever is greater; $\Delta h_{FE2} \leq 15\%$ of initial value.

1/ This test shall be performed anytime after screen 3.

4.3.1 Power burn-in conditions. Power burn-in conditions are as follows:

T_J = 187.5 ±12.5°C; V_{CE} = 25 V dc; T_A = room ambient as defined in the general requirements of 4.5 of MIL-STD-750.

4.3.2 Thermal response (ΔV_{BE} measurements). The ΔV_{BE} measurements shall be performed in accordance with MIL-STD-750., method 3131. The ΔV_{BE} conditions (I_H and V_H) and maximum limit shall be derived by each vendor. The chosen ΔV_{BE} measurement and conditions for each device in the qualification lot shall be submitted in the qualification report and a thermal response curve shall be plotted. The chosen ΔV_{BE} shall be considered final after the manufacturer has had the opportunity to test five consecutive lots. One hundred percent Safe Operating Area (SOA) testing may be performed in lieu of thermal response testing herein provided that the appropriate conditions of temperature, time, current, and voltage to achieve die attach integrity are submitted to the qualifying activity.

4.4 Quality conformance inspection. Quality conformance inspection shall be in accordance with MIL-S-19500, and as specified herein.

4.4.1 Group A inspection. Group A inspection shall be conducted in accordance with MIL-S-19500, and table I herein.

4.4.2 Group B inspection. Group B inspection shall be conducted in accordance with the conditions specified for subgroup testing in IVa (JANS) and table IVb (JANTX and JANTXV) of MIL-S-19500. Electrical measurements (end-points) shall be in accordance with table I, group A, subgroup 2 herein.4.4.2.1 Group B inspection, table IVa (JANS) of MIL-S-19500.

Subgroup	Method	Condition
4	1037	V_{CE} = 20 V dc; P_T = 5 W at T_A = room ambient as defined in the general requirements of 4.5 of MIL-STD-750; $t_{on} = t_{off}$ = 3 minutes minimum for 2,000 cycles. No heat sink or forced-air cooling on devices shall be permitted.
5	1027	V_{CB} = 20 V dc; T_A = +125°C ±25°C for 96 hours; P_T = 5 W at T_A = +125°C or adjusted as required by the chosen T_A to give an average lot T_J = +275°C.

Source: https://assist.dla.mil -- Downloaded: 2016-12-04T09:39Z
Check the source to verify that this is the current version before use.

4.4.2.2 Group B inspection, table IVb (JANTX and JANTXV) of MIL-S-19500.

Subgroup	Method	Condition
3	1037	V_{CB} = 20 V dc; ΔT_J between cycles ≥ +100°C. t_{on} = t_{off} = 3 minutes minimum for 2000 cycles. No heat sink or forced-air cooling on the devices shall be permitted.
5	3053	Load condition C; (unclamped inductive load) (see figure 1); T_C = +25°C; duty cycle ≤ 10%; R_s = .01Ω; t_r = t_f ≤ 500 ns Test 1 - t_p = 5 ms (vary to obtain I_C); V_{BB2} = 0; R_{BB1} = 10Ω; L = 2 mH; V_{BB1} = 10 V dc; R_{BB2} = infinity; I_C = 10 A dc; V_{CC} = 15 V dc Test 2 - t_p = 5 ms (vary to obtain I_C); V_{BB2} = 0; V_{BB1} = 10Ω; R_{BB1} = 100Ω; L = 40 mH; R_{BB2} = infinity; I_C = 1 A dc; V_{CC} = 15 V dc
5	3053	Clamped switching destructive; V_{CC} = 55 V dc; T_A = +25°C; L = 20 mH; (see figures 2 and 3) 2N4399 - clamped voltage = 60 V dc; I_C = 30 A dc 2N5745 - clamped voltage = 80 V dc; I_C = 20 A dc

4.4.3 Group C inspection. Group C inspection shall be conducted in accordance with the conditions specified for subgroup testing in table V of MIL-S-19500. Electrical measurements (end points) shall be in accordance with table I, group A, subgroup 2 herein.

4.4.3.1 Group C inspection, table V of MIL-S-19500.

Subgroup	Method	Condition
6	1037	V_{CB} = 20 V dc; ΔT_J between cycles ≤ +100°C. t_{on} = t_{off} = 3 minutes minimum for 6000 cycles. No heat sink or forced-air cooling on device shall be permitted.

4.5 Method of inspection. Methods of inspection shall be as specified in the appropriate tables and as follows:

4.5.1 Pulse measurements. Conditions for pulse measurement shall be as specified in section 4 of MIL-STD-750.

Source: https://assist.dla.mil -- Downloaded: 2016-12-04T09:39Z
Check the source to verify that this is the current version before use.

TABLE I. Group A inspection.

Inspection	MIL-STD-750		Symbol	Limit		Unit
	Method	Conditions		Min	Max	
Subgroup 1						
Visual and mechanical examination	2071					
Subgroup 2						
Collector to base breakdown voltage	3011	Bias condition D; I_C = 200 mA dc; Pulsed (see. 4.5.1)	$V_{(BR)CEO}$			
2N4399				60		V dc
2N5745				80		V dc
Collector to emitter cutoff current	3041	Bias condition D;	I_{CEO}			
2N4399		V_{CE} = 60 V dc			100	µA dc
2N5745		V_{CE} = 80 V dc			100	µA dc
Emitter-base cutoff current	3061	Bias condition D; V_{EB} = 5 V dc	I_{EBO}		5.0	µA dc
Collector to emitter cutoff current	3041	Bias condition A; V_{BE} = 1.5 V dc;	I_{CEX1}			
2N4399		V_{CE} = 60 V dc			5.0	µA dc
2N5745		V_{CE} = 80 V dc			5.0	µA dc
Base emitter saturated voltage	3066	Test condition A; I_C = 10 A dc; I_B = 1.0 A dc Pulsed (see 4.5.1)	$V_{BE(sat)1}$		1.7	V dc
Base emitter saturated voltage	3066	Test condition A; I_C = 15 A dc; I_{BE} = 1.5 V dc Pulsed (see 4.5.1)	$V_{BE(sat)2}$			
2N4399					1.8	V dc
2N5745					2.0	V dc
Collector to emitter saturated voltage	3071	Pulsed (see 4.5.1) I_C = 5.0 A dc; I_B = 0.5 A dc	$V_{CE(sat)1}$		0.55	V dc
Collector to emitter saturated voltage	3071	I_C = 10 A dc; I_B = 1.0 A dc; Pulsed (see 4.5.1)	$V_{CE(sat)2}$			
2N4399					0.75	V dc
2N5745					1.0	V dc
Forward-current transfer ratio	3076	V_{CE} = 2 V dc; I_C = 1.0 A dc; Pulsed (see 4.5.1)	h_{FE1}	40	425	

See footnote at end of table.

Source: https://assist.dla.mil -- Downloaded: 2016-12-04T09:39Z
Check the source to verify that this is the current version before use.

TABLE I. Group A inspection - Continued.

Inspection	MIL-STD-750		Symbol	Limit		Unit
	Method	Conditions		Min	Max	
Subgroup 2 - Continued.						
Forward-current transfer ratio	3076	V_{CE} = 2 V dc; Pulsed (see 4.5.1);	h_{FE2}			
2N4399		I_C = 15 A dc		15	60	
2N5745		I_C = 10 A dc		15	60	
Forward-current transfer ratio	3076	V_{CE} = 5 V dc; Pulsed (see 4.5.1);	h_{FE3}			
2N4399		I_C = 30 A dc		5		
2N5745		I_C = 20 A dc		5		
Subgroup 3						
High - temperature operation		T_A = +150°C				
Collector to emitter cutoff current	3041	Bias condition A; V_{BE} = 1.5 V dc;	I_{CEX2}			
2N4399		V_{CE} = 60 V dc			10	mA dc
2N5745		V_{CE} = 80 V dc			10	mA dc
Low - temperature operation		T_A = -55°C				
Forward-current transfer ratio	3076	V_{CE} = 2 V dc; Pulsed (see 4.5.1);	h_{FE4}			
2N4399		I_C = 15 A dc		7		
2N5745		I_C = 10 A dc		7		
Subgroup 4						
Pulse response transfer ratio	3251	Test condition A except test circuit and pulse requirement per figure 4.				
Pulse delay time		See figure 4	t_d		0.15	µs dc
Pulse rise time		See figure 4	t_r			
2N4399					0.4	µs dc
2N5745					0.85	µs dc
Pulse storage time		See figure 4	t_s		1.5	µs dc
Pulse fall time		See figure 4	t_f		1.0	µs dc
Magnitude of common emitter small-signal short-circuit forward-current transfer ratio	3306	V_{CE} = 10 V dc; I_C = 1.0 A dc; f = 1 MHz	$\|h_{fe}\|$	4	40	

See footnote at end of table.

Source: https://assist.dla.mil -- Downloaded: 2016-12-04T09:39Z
Check the source to verify that this is the current version before use.

TABLE I. Group A inspection - Continued.

Inspection	MIL-STD-750		Symbol	Limit		Unit
	Method	Conditions		Min	Max	
Subgroup 4 - Continued.						
Open circuit output capacitance	3236	V_{CB} = 10 V dc; I_E = 0; 100 kHz ≤ f ≤ = 1 MHz	C_{obo}		1000	pF
Small-signal short circuit forward-current transfer ratio	3206	V_{CE} = 10 V dc; I_C = 1.0 A dc; f = 1.0 MHz	h_{fe}	40	425	
Subgroup 5						
Safe operating area (dc operation)	3051	T_C = +25°C; t = 1 s; 1 cycle, (see figure 5)				
Test 1 (Both device types)						
2N4399		V_{CE} = 6.67 V dc; I_C = 30 A dc				
2N5745		V_{CE} = 10 V dc; I_C = 20 A dc				
Test 2 (Both device types)		V_{CE} = 20 V dc; I_C = 10 A dc				
Test 3 (Both device types)		V_{CE} = 40 V dc; I_C = 3 A dc				
Test 4						
2N4399		V_{CE} = 50 V dc; I_C = 600 mA dc				
2N5745		V_{CE} = 60 V dc; I_C = 600 mA dc				
Electrical measurements		See table II, steps 1 and 6				
Subgroups 6 and 7						
Not applicable						

For sampling plan see MIL-S 19500.

Source: https://assist.dla.mil -- Downloaded: 2016-12-04T09:39Z
Check the source to verify that this is the current version before use.

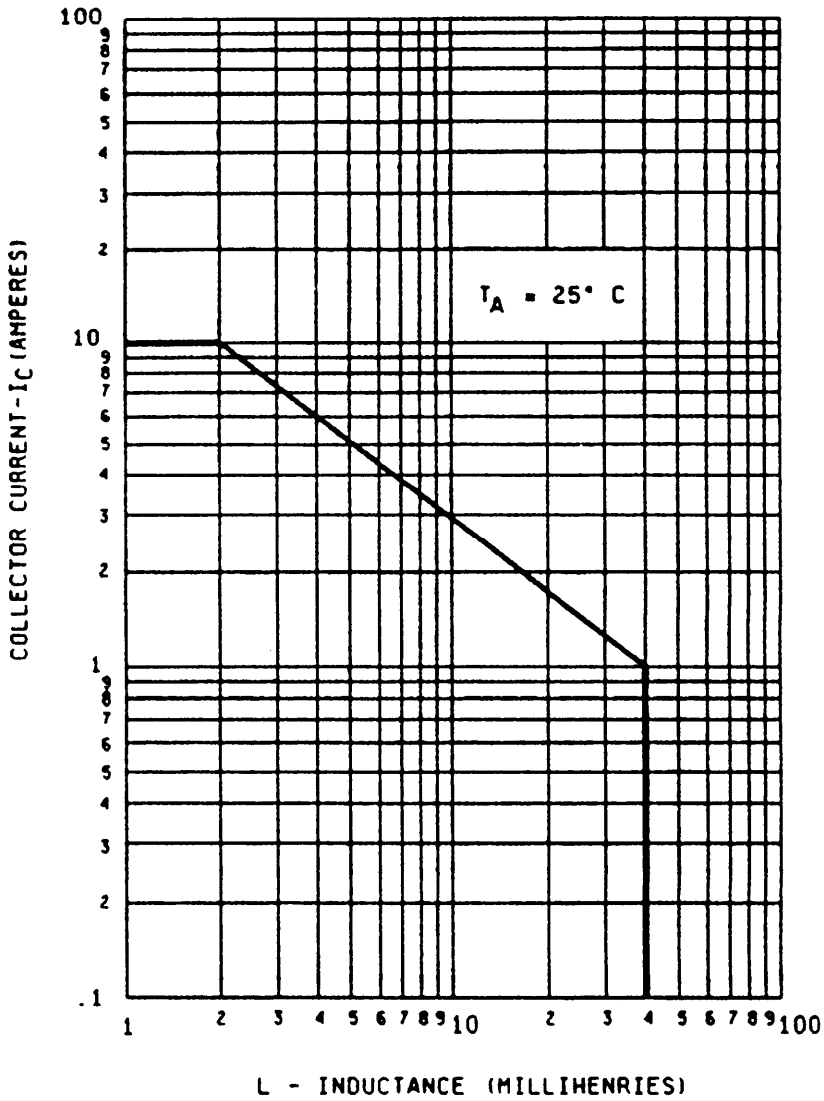

FIGURE 1. Safe operating area for switching between saturation and cutoff (unclamped inductive load).

Source: https://assist.dla.mil -- Downloaded: 2016-12-04T09:39Z
Check the source to verify that this is the current version before use.

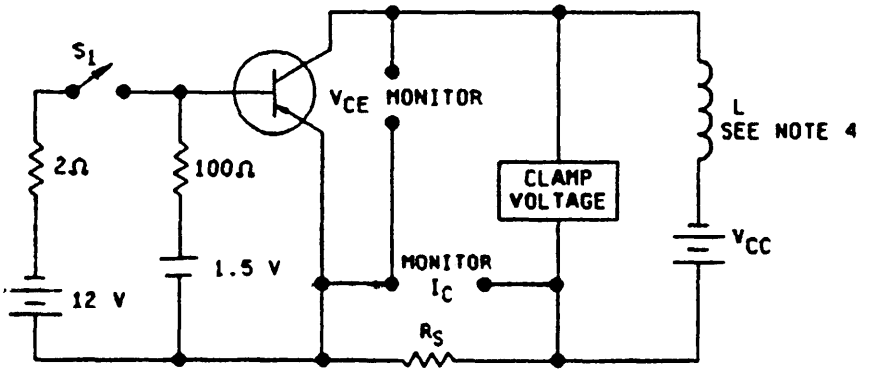

$R_S \leq .1\Omega$, .12 W: 1% TOLERANCE MAX
NON-INDUCTIVE

NOTES:
1. With switch S1 closed, set the specified test conditions.
2. Open S1. Device fails if clamp voltage not reached.
3. Perform specified end-points tests.
4. L = 2.0 mH (2 each 1 mH, 50 A, .001Ω, Sanford Miller CK-50, or equivalent).

FIGURE 2. Clamped inductive sweep test circuit.

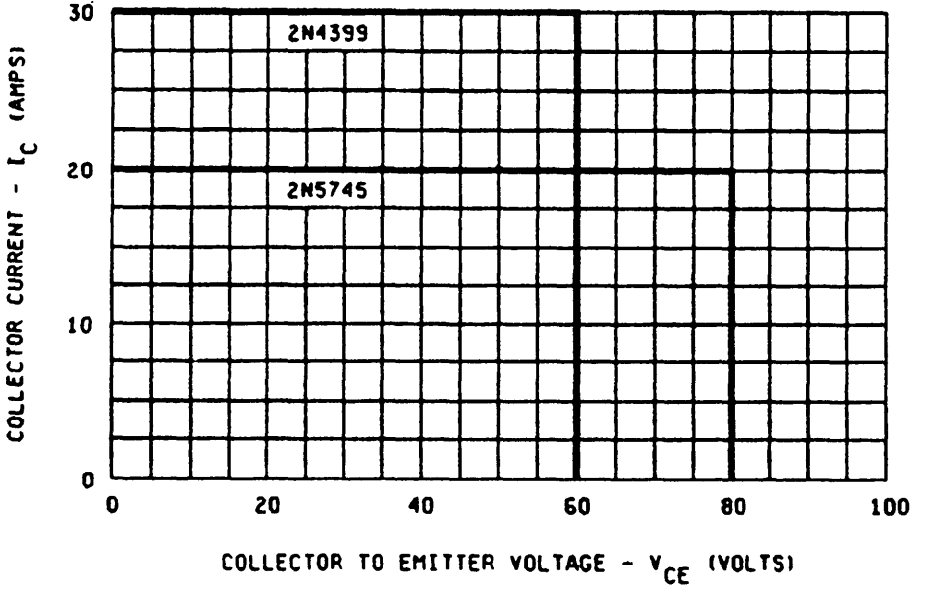

FIGURE 3. Safe operating area for switching between saturation and cutoff (clamped inductive load).

Source: https://assist.dla.mil -- Downloaded: 2016-12-04T09:39Z
Check the source to verify that this is the current version before use.

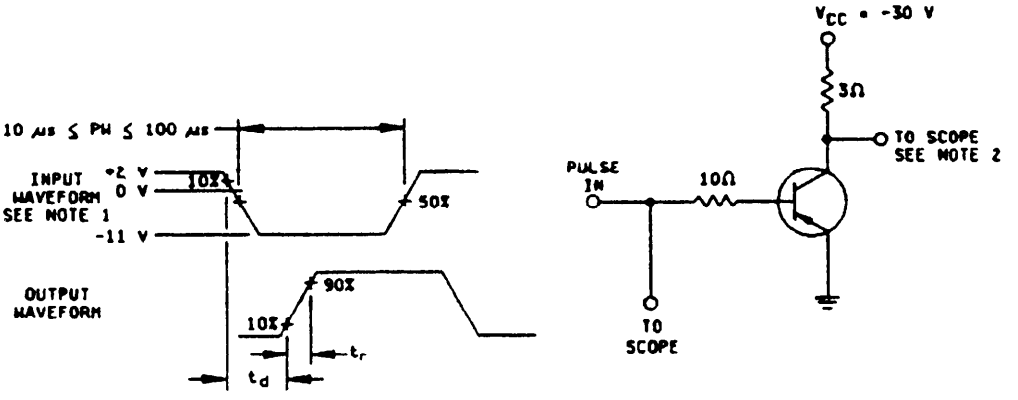

TURN-ON (t_{on}) TIME TEST CIRCUIT A

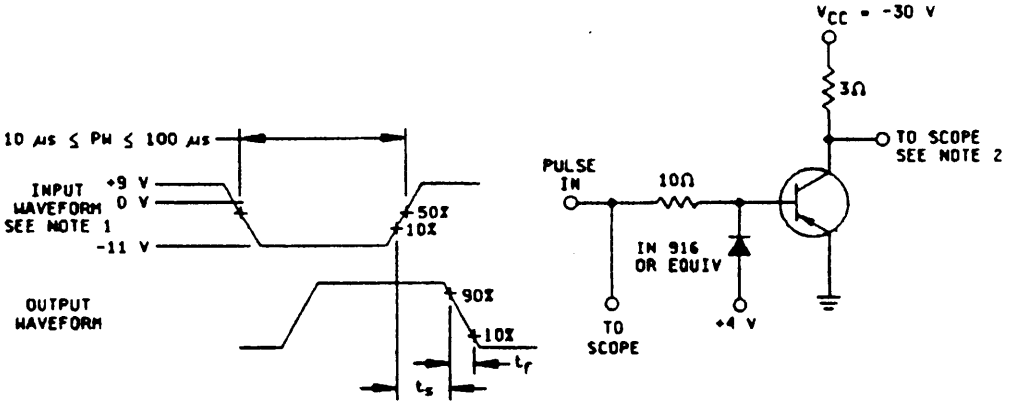

TURN-OFF (t_{off}) TIME TEST CIRCUIT B

NOTES:

1. The input waveform is supplied by a pulse generator with the following characteristics:

   $t_r \leq 20\ \mu s$, $t_f \leq 1\ \mu s$, $10\ \mu s \leq PW \leq 100\ \mu s$, $Z_{OUT} = 50\Omega$, duty cycle ≤ 2 percent.

2. Output waveforms are monitored on an oscilloscope with the following characteristics:

   $t_r \leq 2\ \mu s$, $Z_{IN} \geq 100\ k\Omega$, $C_{IN} \leq 12\ pF$.

3. Test circuit A for t_d and t_r; test circuit B for t_s and t_f.

FIGURE 4. Pulse response test circuit.

Source: https://assist.dla.mil -- Downloaded: 2016-12-04T09:39Z
Check the source to verify that this is the current version before use.

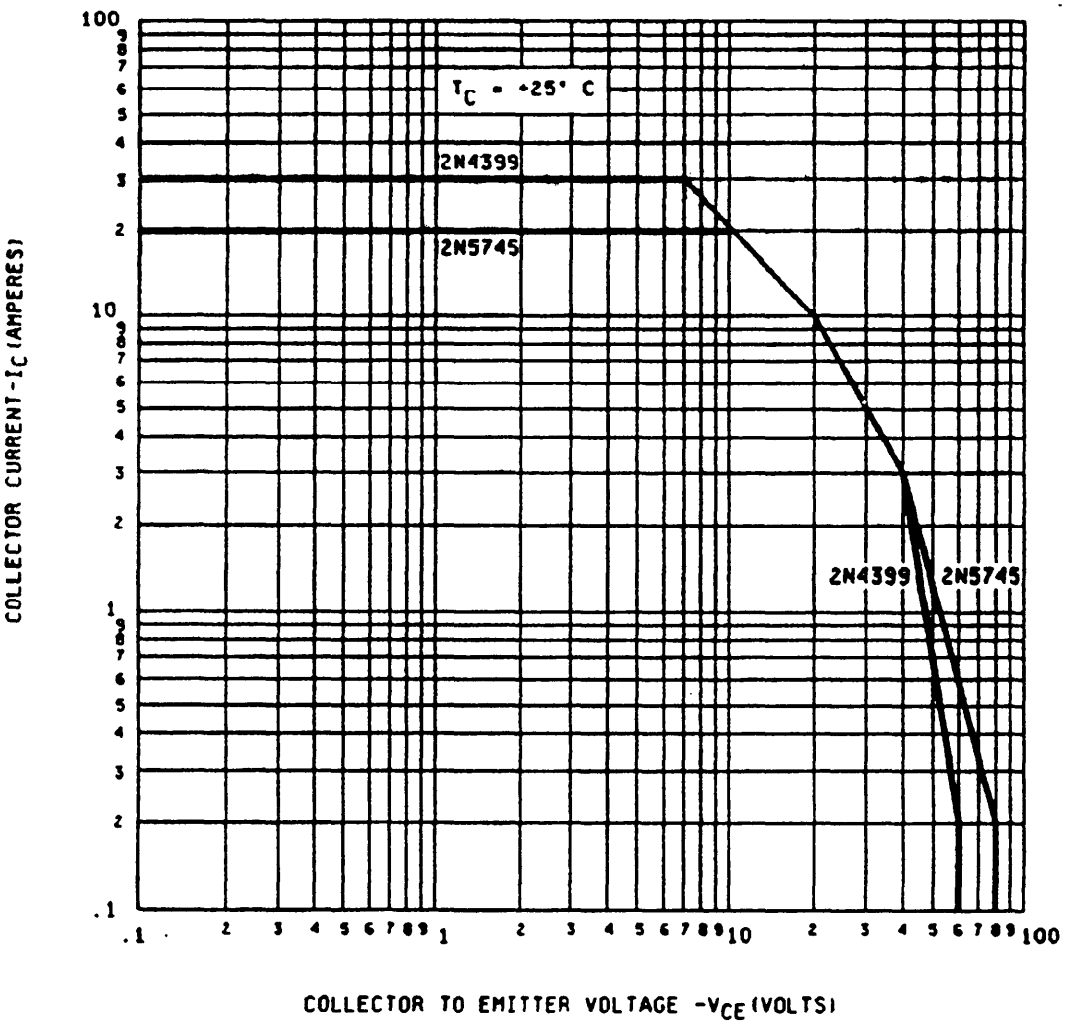

FIGURE 5. Maximum safe operating area graph (continuous dc).

Source: https://assist.dla.mil -- Downloaded: 2016-12-04T09:39Z
Check the source to verify that this is the current version before use.

4.5.2 Thermal resistance. Thermal resistance measurements shall be conducted in accordance with test method 3131 of MIL-STD-750. The following details shall apply:

a. I_M measurement - - - - - - - - - - - - - - - 10 mA dc.
b. V_{CE} measurement voltage - - - - - - - - - - 20 V dc.
c. I_H collector heating current - - - - - - - 2.5 A (minimum).
d. V_H collector emitter heating voltage - - - 20 V (minimum).
e. t_H heating time - - - - - - - - - - - - - - Steady-state (see MIL-STD-750, method 2131).
f. t_{MD} measurement delay time - - - - - - - - - 20 µs.
g. t_{SW} sample window time - - - - - - - - - - 10 µs maximum.

5. PACKAGING

5.1 Packaging requirements. The requirements for packaging shall be in accordance with MIL-S-19500.

6. NOTES

(This section contains information of a general or explanatory nature that may be helpful, but is not mandatory.)

6.1 Notes. The notes specified in MIL-S-19500 are applicable to this specification.

6.2 Acquisition requirements. Acquisition documents should specify the following:

a. Issue of DODISS to be cited in the solicitation.

b. Lead finish as specified (see 3.3.1).

c. Type designation and product assurance level.

6.3 Changes from previous issue. Asterisks are not used in this revision to identify changes with respect to the previous issue due to the extensiveness of the changes.

CONCLUDING MATERIAL

Custodians:
Army - ER
Navy - EC
Air Force - 17
NASA - NA

Review activities:
Army - AV, MI, SM
Navy - AS, CG, MC, OS
Air Force - 13, 15, 19, 99
DLA - ES

Preparing activity:
Army - ER

Agent:
DLA - ES

(Project 5961-1497)

Source: https://assist.dla.mil -- Downloaded: 2016-12-04T09:39Z
Check the source to verify that this is the current version before use.