INCH-POUND

MIL-C-83513C
31 March 1989
SUPERSEDING
MIL-C-83513B
7 March 1986

MILITARY SPECIFICATION

CONNECTORS, ELECTRICAL, RECTANGULAR, MICROMINIATURE, POLARIZED SHELL, GENERAL SPECIFICATION FOR

This specification is approved for use by all Departments and Agencies of the Department of Defense.

1. SCOPE

1.1 Scope. This specification covers polarized shell, microminiature, rectangular connectors.

1.2 Classification.

1.2.1 Class

P - All plastic (shell and insulator)
M - Metal shell (plastic insulator)

1.2.2 Type

I - Crimp contacts (nonremovable)
II - Solder contacts (nonremovable)

2. APPLICABLE DOCUMENTS

2.1 Government documents.

2.1.1 Specifications and standards. Unless otherwise specified, the following specifications and standards of the issue listed in that issue of the Department of Defense Index of Specifications and Standards (DODISS) specified in the solicitation form a part of this specification to the extent specified herein.

Beneficial comments (recommendations, additions, deletions) and any pertinent data which may be of use in improving this document should be addressed to: 2750 Air Base Wing, Electronic Support Division (2750 ABW/ES), Gentile Air Force Station, Ohio 45444, by using the self-addressed Standardization Document Improvement Proposal (DD Form 1426) appearing at the end of this document, or by letter.

AMSC N/A FSC 5935

DISTRIBUTION STATEMENT A. Approved for public release; distribution is unlimited.

Source: https://assist.dla.mil -- Downloaded: 2016-11-25T19:40Z
Check the source to verify that this is the current version before use.

SPECIFICATIONS

FEDERAL

QQ-A-200/8	-	Aluminum Alloy 6061, Bar, Rod, Shapes, Tube and Wire, Extruded.
QQ-A-250/11	-	Aluminum Alloy 6061, Plate and Sheet.
QQ-A-591	-	Aluminum Alloy Die Castings.
QQ-P-35	-	Passivation Treatments for Corrosion Resisting Steel.
QQ-P-416	-	Plating, Cadmium (Electrodeposited).
QQ-S-766	-	Steel Plate, Sheet, and Strip-Corrosion Resisting.
QQ-W-343	-	Wire, Electrical, Copper (Uninsulated).
* SP-R-0022	-	General Specification Vacuum Stability Requirement of Polymeric Material for Spacecraft Application.
ZZ-R-765	-	Rubber, Silicone.

MILITARY

MIL-M-14	-	Molding Plastics and Molded Plastic Parts, Thermosetting.
* MIL-F-14256	-	Flux, Soldering, Liquid (Rosin Base).
MIL-I-17214	-	Indicator, Permeability, Low Mu (Go-No Go).
MIL-W-22759/11	-	Wire, Electric, Fluorocarbon-Insulated, Extruded TFE, Silver-Coated Copper Conductor, 600-Volt.
* MIL-W-22759/19	-	Wire, Electric Fluoropolymer-Insulated, Extruded ETFE, Light Weight, Silver-Coated High Strength Copper Alloy Conductor, 600 Volt, 150°C.
* MIL-W-22759/33	-	Wire, Electric, Fluoropolymer-Insulated, Crosslinked, Modified ETFE, Light Weight, Silver-Coated High Strength Copper Alloy Conductor, 600-Volt, 150°C.
MIL-L-23699	-	Lubricating Oil, Aircraft Turbine Engines, Synthetic Base.
MIL-M-24519	-	Molding Plastics, Polyester, and Polyarylether, Thermoplastic.
MIL-R-25988	-	Rubber, Fluorosilicone Elastomer, Oil-and-Fuel Resistant, Sheets, Strips, Molded Parts, and Extruded Shapes.
MIL-C-26074	-	Coatings, Electroless Nickel, Requirements for.
MIL-G-45204	-	Gold Plating, Electrodeposited.
MIL-C-55330	-	Connectors, Preparation for Delivery Of.
MIL-C-83513/5	-	Connector, Electrical, Rectangular, Microminiature, Mounting Hardware.

(See Supplement 1 for list of associated specifications).

STANDARDS

FEDERAL

FED-STD-H28	-	Screw Thread Standards for Federal Services.

MILITARY

MIL-STD-105	-	Sampling Procedures and Tables for Inspection by Attributes.
MIL-STD-202	-	Test Methods for Electronic and Electrical Component Parts.
MIL-STD-454	-	Standard General Requirement for Electronic Equipment.
* MIL-STD-681	-	Identification Coding and Application of Hookup and Lead Wire.
* MIL-STD-790	-	Reliability Assurance Program for Electronic Parts Specifications.
MIL-STD-1285	-	Marking of Electrical and Electronic Parts.
MIL-STD-1344	-	Test Methods for Electrical Connectors.
* DOD-STD-2000/3	-	Criteria for High Quality/High Reliability Soldering Technology.
MIL-STD-45662	-	Calibration Systems Requirements.

Source: https://assist.dla.mil -- Downloaded: 2016-11-25T19:40Z
Check the source to verify that this is the current version before use.

* 2.2 Other publications. The following documents form a part of this specification to the extent specified herein. Unless otherwise specified, the issues of the documents which are DOD adopted shall be those listed in the issue of the DODISS specified in the solicitation. Unless otherwise specified, the issues of documents not listed in the DODISS shall be the issue of the non-Government documents which is current on the date of the solicitation.

AMERICAN NATIONAL STANDARDS INSTITUTE (ANSI)

ANSI-Y-14.5 M - 1982 - Dimensioning and Tolerancing.

(Application for copies should be addressed to the American National Standards Institute, 1430 Broadway, New York, NY 10018-3308.)

AMERICAN SOCIETY FOR TESTING AND MATERIALS (ASTM)

ASTM A4844 - Steel Products Wrought Stainless and Heat Resisting, General Requirements for.
ASTM A582 - Free Machining Stainless and Heat Resisting Steel Bars, Hot Rolled or Cold Finished, General Requirements for.

(Application for copies should be addressed to American Society for Testing and Materials, 1916 Race Street, Philadelphia, PA 19103-1187).

(Non-Government standards and other publications are normally available from the organizations which prepare or which distribute the documents. These documents also may be available in or through libraries or other informational services.)

2.3 Order of precedence. In the event of a conflict between the text of this specification and the references cited herein (except for associated detail specifications, specification sheets or MS standards), the text of this specification shall take precedence. Nothing in this specification, however, shall supersede applicable laws and regulations unless a specific exemption has been obtained.

3. REQUIREMENTS

* 3.1 Specification sheets. The individual item requirements shall be as specified herein and in accordance with the applicable specification sheets. In the event of any conflict between requirements of this specification and the specification sheets, the latter shall govern. Dimensioning and tolerancing shall be in accordance with ANSI-Y-14.5 M-1982.

3.2 Qualification. Connector assemblies furnished under this specification shall be products which are qualified for listing on the applicable qualified products list at the time set for opening bids (see 4.5 and 6.3).

3.3 Materials. Materials shall be as specified herein. However, when a definite material is not specified, a material shall be used which will enable the connectors to meet the performance requirements of this specification. Acceptance or approval of any constituent material shall not be construed as a guaranty of the acceptance of the finished product.

3.3.1 Dissimilar metals. When dissimilar metals are employed in intimate contact with each other, protection against electrolytic corrosion shall be provided as specified in requirement 16 of MIL-STD-454.

3.3.2 Nonmagnetic materials. All parts used shall be made from materials which are classed as nonmagnetic (see 3.5.1).

Source: https://assist.dla.mil -- Downloaded: 2016-11-25T19:40Z
Check the source to verify that this is the current version before use.

3.3.3 Contact materials. Contacts shall be made of suitably conductive copper based alloys. All contacts shall be suitably protected from corrosion.

* 3.3.4 Contact plating. Contacts shall be gold plated in accordance with MIL-G-45204, type II, grade C, class 1, over a suitable underplate. Minimum contact gold plating thickness shall be 0.000050 inch. Silver underplating shall not be used.

3.3.5 Dielectric materials.

3.3.5.1 Inserts. Inserts for class M connector material shall conform to the requirements of type GDI-30-F or type SDG-F of MIL-M-14; or any glass filled thermoplastic materials in accordance with MIL-M-24519 (color optional).

* 3.3.5.2 Inserts. All plastic class P connectors shall conform to the requirements of type GDI-30-F or type SDG-F of MIL-M-14; or MIL-M-24519; types GPT-30F, GET-30F, or GST-40F (color optional).

* 3.3.6 Shells. Shells shall be die cast or extruded aluminum in accordance with type A380 in accordance with QQ-A-591, or bar stock aluminum in accordance with QQ-A-200/8, or aluminum alloy 6061, 2024, and 7075 in accordance with QQ-A-250/11.

* 3.3.6.1 Finish (class M). Cadmium plated in accordance with QQ-P-416, type II, class 3. A suitable underplate is permissible for aluminum shells when cadmium plating is used. Shells shall be electroless nickel plated in accordance with MIL-C-26074, class 3 or 4, grade B, for space applications only.

3.3.7 Fungus resistant. Materials used in the construction of these connectors shall be fungus inert in accordance with requirement 4 of MIL-STD-454.

* 3.3.8 Interfacial seals. Seals shall be made from silicone or fluorosilicone elastomer in accordance with ZZ-R-765 or MIL-R-25988 or blend thereof.

* 3.3.9 Flux. When flux is used, it shall conform to type RMA of MIL-F-14256, flux, soldering liquid (rosin base).

3.4 Design, construction, and physical dimensions. Connectors shall be of the design, construction and physical dimensions specified (see 3.1). Connectors shall be so designed that neither the pins nor the sockets will be damaged during normal mating of counterpart connectors.

3.4.1 Contact design. Contacts shall be the reverse gender type. The live pin shall be installed in a protective insulator with the static socket protruding from a suitably shrouded insulator.

3.4.1.1 Solder contacts. Solder contacts shall be nonremovable from the insert and shall have solder cup terminals as specified (see 3.1). Solder cups shall be so designed that during soldering no components shall be damaged and no liquid solder shall escape.

3.4.1.2 Crimp contacts. Crimp contacts shall be nonremovable from the insert.

3.4.1.3 Contact identification. Contact position number one shall have an identifiable mark placed on the surface or side of the number one contact position.

Source: https://assist.dla.mil -- Downloaded: 2016-11-25T19:40Z
Check the source to verify that this is the current version before use.

3.4.2 Insert design and construction. Inserts shall be designed with suitable sections and radii such that they will not readily chip, crack, or break in assembly or in normal service. Inserts shall be molded in or bonded into the metal shell (class M) or as specified (see 3.1). Pin inserts shall provide adequate protection against a socket contacting a pin before the mating pair of connectors has been polarized. The insert shall be so designed that the insert cannot be removed from the shells (class M) in accordance with the retention requirement of 3.5.17. The contact retention system shall provide positive retention.

3.4.2.1 Insert arrangement. The contact arrangement shall be as specified by the connector part number (see 3.1).

3.4.2.2 Contact alignment and stability. With all contacts in place, the alignment of pin/socket contacts shall always permit engagement irrespective of buildup of allowable tolerances on hole locations, distortion of contacts due to crimping, and insulator location in the shell.

3.4.3 Shell design (class M). The shell shall be designed to positively retain the insulator and shall be constructed so that the insulator cannot be removed (see 3.4.2).

3.4.3.1 Shell polarization. Polarization shall be accomplished by a keystone shape shell design with polarization accomplished before engagement of the pins and sockets.

3.4.3.2 Mounting hardware (see MIL-C-83513/5 for mounting hardware options). Hardware shall conform to QQ-S-766, QQ-P-35, and FED-STD-H28 (see 3.1). Mounting hardware is to be ordered independently of connectors and will be supplied loose pack unless otherwise specified.

3.4.4 Interchangeability. All connectors having the same military part number shall be completely interchangeable with each other with respect to installation (physical) and performance (function) as specified herein. Solder and crimp contact connectors of the same class and number of contacts shall be intermateable.

* 3.4.5 Pigtail wire. Insulated wire shall be in accordance with MIL-W-22759/11, except MIL-W-22759/33 shall be used for space applications. Uninsulated wire shall be in accordance with QQ-W-343. 1/

3.5 Performance Connectors shall be designed to meet the performance requirements specified herein.

* 3.5.1 Magnetic permeability. The relative permeability shall not exceed 2.0 μ when measured as specified in 4.7.2, except for hardware, see 3.1.

3.5.2 Mating and unmating force. The maximum mating and unmating force shall not exceed a value equal to 10 ounces times the number of contacts. Testing shall be as specified in 4.7.3.

3.5.3 Contact retention. Contacts for connectors shall be retained in the insulators by a 5-pound minimum force in accordance with 4.7.4.

1/ MIL-W-22759/33 replaces MIL-W-22759/19 effective 12 months after the date of the document.

Source: https://assist.dla.mil -- Downloaded: 2016-11-25T19:40Z
Check the source to verify that this is the current version before use.

3.5.4 Dielectric withstanding voltage. Mated or unmated connectors shall show no evidence of breakdown or flashover when subjected to the test voltages and altitude of table I. Corona shall not be considered as specified in 4.7.5.

*TABLE I. Test voltage (rms 60 hertz ac volts). 1/

	All classes and types initial	After humidity types I and II	
		Class M	Class P
Sea level - - - - -	600	360	100
70,000 feet - - - -	150	---	---

1/ These are not working voltages.

3.5.5 Insulation resistance. The insulation resistance of mated connectors shall conform to the applicable requirements of table II when tested in accordance with 4.7.6.

TABLE II. Insulation resistance.

Humidity conditioned (see 4.7.10)		
After step 6 of method 1002 of MIL-STD-1344	After 24 hours of conditioning (method 1002 of MIL-STD-1344)	All other conditions
Megohms (min)	Megohms (min)	Megohms (min)
1	1,000	5,000

Source: https://assist.dla.mil -- Downloaded: 2016-11-25T19:40Z
Check the source to verify that this is the current version before use.

* 3.5.6 Contact resistance. Contact resistance for mated pairs of pin and socket contacts including wire shall be as required by table III when tested in accordance with 4.7.7. A test current of less than 2.5 amperes is permitted for group B testing only, with the corresponding millivolt drop changes.

TABLE III. Contact resistance (millivolts).

Contact size	Wire size AWG	Test current (amperes)	Millivolt drop		Wire type
			Initial	After salt spray	
24	26	2.5	65 maximum	70 maximum	MIL-W-22759/11 (stranded)
24	26	2.5	75 maximum	80 maximum	MIL-W-22759/33 (stranded)
24	25	2.5	60 maximum	65 maximum	QQ-W-343 1/ (solid)

1/ Sleeving is permitted for testing purposes only.

3.5.7 Contact engagement and separation forces. Pin contacts shall conform with the forces specified in table IV when tested in accordance with 4.7.8.

TABLE IV. Contact engagement and separation forces (ounces).

Contact size	Maximum individual engagement force (ozs) using minimum diameter test sleeve	Minimum individual separation force (ozs) using maximum diameter test sleeve
24	6.0	0.5

3.5.8 Temperature cycling. There shall be no damage detrimental to the operation of the connector after being subjected to the temperature extremes of table V when tested in accordance with 4.7.9.

TABLE V. Temperature extremes.

Extremes	°C
Low	-55 +0, -3
High	+125 +3, -0

3.5.9 Humidity. Connectors shall meet the applicable dielectric withstanding voltage and insulation resistance requirements (see 3.5.4 and 3.5.5) when tested as specified in 4.7.10.

* 3.5.10 Resistance to soldering heat. When tested in accordance with 4.7.11, type II connectors shall be visually inspected and show no evidence of distortion or physical damage and shall meet the dimensional requirements of 3.4 and the contact retention requirements of 3.5.3.

* 3.5.11 Solderability. Type II contacts shall withstand the test conditions for solderability as specified in 4.7.12.

Source: https://assist.dla.mil -- Downloaded: 2016-11-25T19:40Z
Check the source to verify that this is the current version before use.

3.5.12 Vibration. Mated connectors shall not be damaged and there shall be no loosening of parts due to vibration. Counterpart connectors shall be retained in the mated condition and there shall be no interruption of electrical continuity or current flow longer than 1 microsecond when tested as specified in 4.7.13.

3.5.13 Shock. Mated connectors shall not be damaged and there shall be no loosening of parts, nor shall there be an interruption of electrical continuity or current flow longer than 1 microsecond during the exposure to mechanical shock, as specified in 4.7.14.

3.5.14 Durability. Counterpart connectors shall show no mechanical or electrical defects detrimental to the operation of the connector as specified in 3.5.2, 3.5.6, and 3.5.7 after 500 cycles of mating and unmating as specified in 4.7.15.

3.5.15 Salt spray (corrosion). Mated connectors shall show no exposure of base metal due to corrosion which will affect performance as specified in accordance with 3.5.2, 3.5.3, 3.5.6, and 3.5.19 when tested as specified in 4.7.16.

3.5.16 Fluid immersion. After being subjected to the fluid immersion test of 4.7.17, connectors shall mate within the forces specified in 3.5.2 and within the distance D note on figure 1.

3.5.17 Insert retention (class M). Insulators shall not be dislocated from their original positions when an axial load of 50 pounds per square inch (psi) is applied as specified in 4.7.18.

* 3.5.18 Crimp tensile strength (type I contacts only). When tested as specified in 4.7.19, the wire shall not break or pull out of the crimp at less than 5 pounds, 10 pounds for M22759/33*** and M22759/19***. Wire breakage other than at the crimp shall not constitute failure.

3.5.19 Low-signal level contact resistance. When tested in accordance with 4.7.20 the contact resistance shall be as shown in table VI.

TABLE VI. Contact resistance (milliohms).

Contact size	Wire size AWG	Milliohms max.	Wire type
24	26	28	MIL-W-22759/11 (stranded)
24	26	32	MIL-W-22759/19 (stranded)
26	25	25	QQ-W-343 (solid)

3.5.20 Thermal vacuum outgassing (space classes only). The entire connector assembly, when tested in accordance with 4.7.21 shall have maximum total mass loss (TML) of 1.0 percent of the original specimen mass and shall have a maximum volatile condensable material (VCM) content of 0.1 percent of the original specimen mass.

3.6 Marking. Each connector shall be marked in accordance with method I of MIL-STD-1285, and shall include the military part number (see 3.1), the manufacturer's name or CAGE code symbol, and date code.

Source: https://assist.dla.mil -- Downloaded: 2016-11-25T19:40Z
Check the source to verify that this is the current version before use.

3.7 Workmanship. Connectors and accessories shall meet all design dimensions and intermateability requirements of this specification. Loose contacts, poor molding fabrication, damaged or improperly assembled contacts, peeling or chipping of plating or finish, galling of mated parts, nicks and burrs of metal parts and post molding warpage will be considered adequate basis for rejection of items of quality inferior for the purpose intended.

4. QUALITY ASSURANCE PROVISIONS

4.1 Responsibility for inspection. Unless otherwise specified in the contract, the contractor is responsible for the performance of all inspection requirements as specified herein. Except as otherwise specified in the contract, the contractor may use his own or any other facilities suitable for the performance of the inspection requirements specified herein, unless disapproved by the Government. The Government reserves the right to perform any of the inspections set forth in the specification where such inspections are deemed necessary to assure supplies and services conform to prescribed requirements.

* 4.1.1 Responsibility for compliance. All items must meet all requirements of sections 3 and 5. The inspection set forth in this specification shall become a part of the contractor's overall inspection system or quality program. The absence of any inspection requirements in the specification shall not relieve the contractor of the responsibility of assuring that all products or supplies submitted to the Government for acceptance comply with all requirements of the contract. Sampling in quality conformance does not authorize submission of known defective material, either indicated or actual, nor does it commit the Government to acceptance of defective material.

4.1.2 Test equipment and inspection facilities. Test and measuring equipment and inspection facilities of sufficient accuracy, quality, and quantity to permit performance of the required inspection shall be established and maintained by the contractor. The establishment and maintenance of a calibration system to control the accuracy of the measuring and test equipment shall be in accordance with MIL-STD-45662.

4.1.3 Assembly plants. Assembly plants must be listed on or approved for listing on the applicable qualified products list. The qualified connector manufacturer shall certify that the assembly plant is approved for the distribution of the manufacturer's parts. The assembly plant shall use only piece parts supplied by the qualified connector manufacturer. No testing other than visual inspection is required on certified piece parts obtained from the qualified connector manufacturer, except when there is cause for rejection. All assemblies produced at the assembly plant shall be subjected to examination of product to assure that the assembly process conforms with that established at the qualified manufacturing plant. Quality control requirements, including government inspection surveillance, shall be the same as required for the qualified connector manufacturer.

* 4.1.4 Reliability assurance program. A reliability assurance program shall be established and maintained in accordance with MIL-STD-790. Evidence of such compliance shall be verified by the qualifying activity of this specification as a prerequisite for qualification and continued qualification effective 12 months after the date of this document.

Source: https://assist.dla.mil -- Downloaded: 2016-11-25T19:40Z
Check the source to verify that this is the current version before use.

4.2 Classification of inspections. The inspections specified herein are classified as follows:

a. Materials inspection (see 4.3).

b. Qualification inspection (see 4.5).

c. Quality conformance inspection (see 4.6).

4.3 Materials inspection. Materials inspection shall consist of certification supported by verifying data that the materials used in fabricating the connectors are in accordance with the applicable referenced specifications or requirements prior to such fabrication.

4.4 Inspection conditions. Unless otherwise specified, all inspections shall be performed in accordance with the test conditions specified in the "GENERAL REQUIREMENTS" of MIL-STD-1344.

* 4.4.1 Preparation of samples. Connectors with electroless nickel-plated shells shall be wired with the appropriate length of wire conforming to MIL-W-22759/33 (26 AWG). All other connector samples shall be wired with the appropriate length conforming to MIL-W-22759/11 (26 AWG). Termination of wires to contacts shall be crimped or soldered. Soldering shall be in accordance with requirements of MIL-STD-454 for solder contacts.

4.5 Qualification inspection. Qualification inspection shall be performed at a laboratory acceptable to the Government (see 6.3) on sample units produced with equipment and procedures normally used in production.

4.5.1 Sample size.

* 4.5.1.1 Connectors. Samples of the connectors with the largest number of contacts for the class and type for which qualification is desired shall be inspected. If only one class is to be qualified, six samples of the largest size consisting of four samples of type I and two samples of type II shall be submitted. If both class P and M connectors are being qualified at the same time, four samples of the largest size, consisting of three samples of type I and one sample of type II shall be submitted. If qualification of only one type of any class is desired, six samples of the largest size shall be submitted. If qualification of more than one shell finish or dielectric material is desired, quantities and tests will be determined by the qualification agency. If qualification of class M, nickel-plated connectors (for space applications only) is desired in addition to qualification of class P and M cadmium plated connectors, four samples (three type I and one type II connector) of the largest size of class M, nickel plated connector proposed for qualification shall be submitted in addition to all other samples submitted. In addition, four samples of type II (solid wire and solder cup) shall be tested to group V only of table VII.

* 4.5.1.2 Contacts. Individual contacts to be used in the connectors proposed for qualification shall be subject to crimp tensile strength testing in accordance with group IV of table VII. Twenty contact mating pairs for each wire type, shall be tested for qualification purposes and 10 contact mating pairs for each particular design shall be tested for retention of qualification (see 3.4.5).

Source: https://assist.dla.mil -- Downloaded: 2016-11-25T19:40Z
Check the source to verify that this is the current version before use.

*TABLE VII. Qualification and retention of qualification inspection.

Inspection	Requirement paragraph	Test method paragraph
Group I (all sample units)		
Visual and mechanical inspection 1/ - -	3.1, 3.3 to 3.3.7 inclusive, 3.4 to 3.4.5 inclusive, 3.6, and 3.7	4.7.1
Magnetic permeability 2/ - - - - - - -	3.5.1	4.7.2
Dielectric withstanding voltage 2/		
At sea level 2/ - - - - - - - - - - -	3.5.4	4.7.5.1
At altitude 2/ - - - - - - - - - - -	3.5.4	4.7.5.2
Insulation resistance - - - - - - - - - -	3.5.5	4.7.6
Contact resistance- - - - - - - - - - -	3.5.6	4.7.7
Contact engagement and separation forces	3.5.7	4.7.8
Mating and unmating force - - - - - - -	3.5.2	4.7.3
Temperature cycling - - - - - - - - - - -	3.5.8	4.7.9
Humidity- - - - - - - - - - - - - - - - -	3.5.9	4.7.10
Dielectric withstanding voltage - - -	3.5.4	4.7.5.1
Insulation resistance - - - - - - - -	3.5.5	4.7.6
Vibration - - - - - - - - - - - - - - - -	3.5.12	4.7.13
Shock - - - - - - - - - - - - - - - - - -	3.5.13	4.7.14
Durability- - - - - - - - - - - - - - - -	3.5.14	4.7.15
* Contact resistance- - - - - - - - - - -	3.5.6	4.7.7
Contact engagement and separation forces 3/- - - - - - - - - - - - - - -	3.5.7	4.7.8
Mating and unmating force - - - - - -	3.5.2	4.7.3
Group II (one-half of sample units)		
Salt spray (corrosion)- - - - - - - - -	3.5.15	4.7.16
Low signal level contact resistance -	3.5.19	4.7.20
Contact resistance- - - - - - - - - - -	3.5.6	4.7.7
Mating and unmating force - - - - - -	3.5.2	4.7.3
Contact retention - - - - - - - - - - -	3.5.3	4.7.4
Visual and mechanical inspection- - - -	3.1, 3.3 to 3.3.7 inclusive, 3.4 to 3.4.5 inclusive, 3.6, and 3.7	4.7.1
Group III (one-half of sample units)		
Fluid immersion 2/ - - - - - - - - - - -	3.5.16	4.7.17
Mating and unmating force 2/ 4/- - -	3.5.2	4.7.3
Insert retention (class M only) - - - -	3.5.17	4.7.18
Visual and mechanical inspection- - - -	3.1, 3.3 to 3.3.7, 3.4 to 3.4.5 inclusive, 3.6 and 3.7	4.7.1
Group IV		
* Crimp tensile strength type I only 5/ -	3.5.18	4.7.19
Thermal vacuum outgassing (space applications only) 6/ 7/ - - - - - -	3.5.20	4.7.21

See footnotes at end of table.

Source: https://assist.dla.mil -- Downloaded: 2016-11-25T19:40Z
Check the source to verify that this is the current version before use.

*TABLE VII. Qualification and retention of qualification inspection - Continued.

Inspection	Requirement paragraph	Test method paragraph
* Group V (4 of sample units, type II)		
Contact retention - - - - - - - - - - - -	3.5.3	4.7.4
Solderability - - - - - - - - - - - - - -	3.5.11	4.7.12
Resistance to soldering heat - - - - -	3.5.10	4.7.11

* 1/ All sample units, except groups IV and V.
2/ Not required for retention of qualification.
3/ Preconditioning is not required.
4/ Cycling of connector three times is not required.
* 5/ Loose contacts only (see 4.5.1.2).
* 6/ Space class connectors only shell finish electroless nickel.
* 7/ Not required for retention of qualifications provided there are no changes in processes and materials since last qualifications.

4.5.1.3 Qualification of other connector sizes. For all other connector sizes of both class P and M, types I and II for which qualification is desired, two completely assembled type I mating connector pairs for each size and class shall be subjected to the tests of table VII. Successful qualification of type I connectors will qualify type II. If only qualification of one type is desired, only two each additional connectors of that type are to be submitted.

4.5.2 Inspection routine. The sample shall be subjected to the inspections specified in table VIII, in the order shown. All sample units shall be subjected to the inspections of group I. The sample shall then be divided equally into two groups; one shall be subjected to the group II inspections, and the other shall be subjected to the group III inspections. Group IV is for contacts only and the sample size shall be in accordance with 4.5.1.2.

4.5.3 Failures. One or more failures shall be cause for refusal to grant qualification approval.

* 4.5.4 Retention of qualification. To retain qualification, the contractor shall forward a report at 12-month intervals to the qualifying activity. The qualifying activity shall establish the initial reporting date. The report shall consist of:

a. A summary of the results of the tests performed for inspection of product for delivery, groups A and B, indicating as a minimum the number of lots that have passed and the number that have failed. The results of tests of all reworked lots shall be identified and accounted for.

b. A summary of the results of tests performed for periodic inspection, group C, including the number and mode of failures. The summary shall include results of all periodic inspection tests performed and completed during the initial 12-month period and thereafter on 24-month periods. If the summary of the test results indicates nonconformance with specification requirements, and corrective action acceptable to the qualifying activity has not been taken, action may be taken to remove the failing product from the qualified products list.

Source: https://assist.dla.mil -- Downloaded: 2016-11-25T19:40Z
Check the source to verify that this is the current version before use.

Failure to submit the report within 60 days after the end of each 12-month period may result in loss of qualification for the product. In addition to the periodic submission of inspection data, the contractor shall immediately notify the qualifying activity at any time during the 12-month period that the inspection data indicates failure of the qualified product to meet the requirements of this specification.

In the event that no production occurred during the reporting period, a report shall be submitted certifying that the company still has the capabilities and facilities necessary to produce the item. If during two consecutive reporting periods, there has been no production, the manufacturer may be required, at the discretion of the qualifying activity, to submit (the products, a representative product of each type, grade, class, etc.) to testing in accordance with the qualification inspection requirements.

4.6 Quality conformance inspection.

4.6.1 Inspection of product for delivery. Inspection of product for delivery shall consist of groups A and B inspections.

4.6.1.1 Inspection lot. An inspection lot shall consist of all connectors produced under essentially the same conditions, and offered for inspection at one time.

4.6.1.2 Group A inspection. Group A inspection shall consist of the inspections specified in table VIII, in the order shown.

TABLE VIII. Group A inspection.

Inspection	Requirement paragraph	Test method paragraph	AQL (percent defective)	
			Major	Minor
Visual and mechanical inspection	3.1, 3.3 to 3.3.7 inclusive, 3.4 to 3.4.5 inclusive, 3.6 and 3.7	4.7.1	1.0	4.0
Dielectric withstanding voltage (at sea level)	3.5.4	4.7.5.1	1.0	4.0
Insulation resistance	3.5.5	4.7.6	1.0	4.0

4.6.1.2.1 Sampling plan. Statistical sampling and inspection shall be in accordance with MIL-STD-105 for general inspection level II. The acceptable quality level (AQL) shall be as specified in table II. Major and minor defects shall be as defined in MIL-STD-105.

4.6.1.2.2 Rejected lots. If an inspection lot is rejected, the contractor may rework it to correct the defects, or screen out the defective units, and resubmit for reinspection. Resubmitted lots shall be inspected using tightened inspection. Such lots shall be separate from new lots, and shall be clearly identified as reinspected lots.

Source: https://assist.dla.mil -- Downloaded: 2016-11-25T19:40Z
Check the source to verify that this is the current version before use.

4.6.1.3 Group B inspection. Group B inspection shall consist of the inspections specified in table IX and shall be made on sample units which have been subjected to and have passed the group A inspection.

TABLE IX. Group B inspection.

Inspection	Requirement paragraph	Test method paragraph
Contact resistance	3.5.6	4.7.7
Mating and unmating force	3.5.2	4.7.3

4.6.1.3.1 Sampling plan. The sampling plan shall be in accordance with MIL-STD-105 for special inspection level S-4. The AQL shall be 1.0 percent defective. All contacts in the sample unit shall be tested.

4.6.1.3.2 Rejected lots. If an inspection lot is rejected, the contractor may rework it to correct the defects, or screen out the defective units, and resubmit for reinspection. Resubmitted lots shall be inspected using tightened inspection. Such lots shall be separate from new lots, and shall be clearly identified as reinspected lots.

4.6.1.3.3 Disposition of sample units. Sample units which have passed all of group B inspection may be delivered on the contract, if the lot is accepted.

4.6.2 Periodic inspection. Periodic inspection shall consist of group C inspection. Except where the results of these inspections show noncompliance with the applicable requirements (see 4.6.2.1.4), delivery of products which have passed groups A and B inspections shall not be delayed pending the results of these inspections.

4.6.2.1 Group C inspection. Group C inspection shall consist of the inspections specified in table VII, in the order shown. Group C inspection shall be made on sample units selected from inspection lots which have passed the groups A and B inspections.

* 4.6.2.1.1 Sampling plan. Group C inspection shall be performed every 24 months on samples from units produced during the period. Sampling shall be in accordance with 4.5.1. The connectors shall have their full complement of contacts. The samples shall be subjected to the inspections of group I of table VII. The samples shall then be divided equally into two groups; one shall be subjected to the group II inspections, and the other shall be subjected to the group III inspections. The sample size used for the crimp stensile strength test of group IV shall be in accordance with 4.5.1.2. Four additional type II samples shall be subjected to group V inspection only in accordance with 4.5.1.1.

4.6.2.1.2 Failures. If one or more sample units fail to pass group C inspection, the samples shall be considered to have failed.

4.6.2.1.3 Disposition of sample units. Sample units which have been subjected to group C inspection shall not be delivered on the contract.

Source: https://assist.dla.mil -- Downloaded: 2016-11-25T19:40Z
Check the source to verify that this is the current version before use.

4.6.2.1.4 Noncompliance. If a sample fails to pass group C inspection, the manufacturer shall notify the qualifying activity and the cognizant inspection activity of such failure and take corrective action on the materials or processes, or both, as warranted, and on all units of product which can be corrected and which were manufactured under essentially the same materials and processes, and which are considered subject to the same failure. Acceptance of the product shall be discontinued until corrective action, acceptable to the qualifying activity has been taken. After the corrective action has been taken, group C inspection shall be repeated on additional sample units (all inspections, or the inspection which the original sample failed, at the option of the qualifying activity). Groups A and B inspections may be reinstituted; however, final acceptance and shipment shall be withheld until the group C inspection has shown that the corrective action was successful. In the event of failure after reinspection, information concerning the failure shall be furnished to the cognizant inspection activity and the qualifying activity.

4.6.3 Inspection of packaging. The sampling and inspection of the preservation, packing, and container marking shall be in accordance with the requirements of MIL-C-55330.

4.7 Methods of inspection.

4.7.1 Visual and mechanical inspection. Contacts and connectors shall be examined to ensure conformance with this specification and the applicable detail documents not covered by the performance requirements of 3.5. In process controls of component parts, unrelated to lot sizes of finished connectors, may be utilized in lieu of examination of these components in the finished contacts or connectors to assure conformance of these component parts. Examination in a continuing manner shall be performed to assure compliance with the following requirements:

a. Specification sheets (3.1).

b. Materials (3.3 to 3.3.7 inclusive).

c. Design, construction and physical dimensions (3.4 to 3.4.5 inclusive).

d. Marking (3.6).

e. Workmanship (3.7).

4.7.1.1 Final examination. Final examination of crimp contacts shall include a thorough examination to insure that the contact is free from mechanical defects, that there are no cracks around the crimp area, and that the contacts meet the physical requirements specified herein. Examination shall be made with a device having magnification power of approximately 3X.

4.7.2 Magnetic permeability. Permeability shall be measured on connectors with an instrument conforming to MIL-I-17214. The connectors may be wired or unwired, but shall not be carrying current. Requirements shall be as specified in 3.5.1.

4.7.3 Mating and unmating force. Connectors shall be rigidly mounted in a manner to permit mating and unmating of the counterpart connectors, and with instrumentation capable of measuring the specified forces. Gradually increasing axial loads shall be applied until plugs and receptacles are fully mated (see figure 1). Then the forces shall be applied so as to disengage the connectors. The forces shall be measured in both directions and shall conform to the requirements of 3.5.2. No one connector half may be used as a test fixture for more than 500 cycles of mating and unmating. Subject connector pairs to three mate/unmate cycles before initial measurements are taken.

Source: https://assist.dla.mil -- Downloaded: 2016-11-25T19:40Z
Check the source to verify that this is the current version before use.

4.7.4 Contact retention. Connectors shall be tested in accordance with method 2007 of MIL-STD-1344. The following details and exceptions shall apply:

a. Number of samples: Twenty percent, but not less than seven contacts of the test specimen shall be tested.

b. Applied axial load: One pound per second until the load specified in 3.5.3 has been reached. Maintain load for 5 seconds minimum.

c. Maximum allowable contact displacement during application of specified force and after removal of specified force: None.

d. When pin or socket contact are tested, the load shall be applied by pulling on the pigtail. Wire breakage outside of the connector is not a failure.

4.7.5 Dielectric withstanding voltage.

4.7.5.1 Sea level. Mated or unmated connectors shall be tested in accordance with method 3001 of MIL-STD-1344. The applicable test voltage specified in table I shall be applied between all adjacent contacts and between the shell and each peripheral contact of type M only. Requirements shall be as specified in 3.5.4. For group A inspection testing, voltage shall be applied for a minimum of 10 seconds.

4.7.5.2 Altitude. The connectors shall be tested in accordance with method 3001 of MIL-STD-1344, with altitude pressure of 35.5 torr, at the simulated altitude of 70,000 feet. All other requirements are stated in 4.7.5.1.

* 4.7.6 Insulation resistance. Mated connectors shall be tested in accordance with method 3003 of MIL-STD-1344. Test voltage shall be 500 volts ±10 percent initially, then reduced to 100 volts ±10 percent after humidity. The resistance shall be measured between 50 percent, but not less than four pairs of adjacent contacts and between 50 percent, but not less than six contacts adjacent to the shell (type M only). The contacts selected shall be those having the closest spacing between measurement points and the measured resistance shall be as required by 3.5.5.

4.7.7 Contact resistance. Twenty percent, but no less than seven contacts of the mated connectors shall be tested. The potential drop of each mated pair of pins and sockets shall be measured after temperature stabilization with the specified current flowing through the contacts at an ambient temperature of 25°C ±3°C (see 3.5.6). The applicable test circuit shall be as shown on figure 2, and contacts shall be fully mated (see figure 1).

4.7.8 Contact engagement and separation forces. Twenty percent, but no less than seven contacts in each connector shall be tested. Socket test sleeve (see figure 3) shall be mounted in a suitable position or fixture for applying gradually increasing axial loads for the engagement and separation of pin contacts from the test bushing. The pin contact shall not bottom in the socket test sleeve. Engagement and separation forces shall meet the requirements as specified in 3.5.7 when contacts are tested as follows:

a. Insert and separate a pin contact in a minimum diameter test sleeve, then insert and remove the pin contact in a maximum diameter test sleeve. During separation from the maximum test sleeve, the minimum separation force shall conform to 3.5.7.

b. Insert and separate a pin contact in a minimum diameter test sleeve three times. During the third cycle, the engagement force shall conform to 3.5.7.

Source: https://assist.dla.mil -- Downloaded: 2016-11-25T19:40Z
Check the source to verify that this is the current version before use.

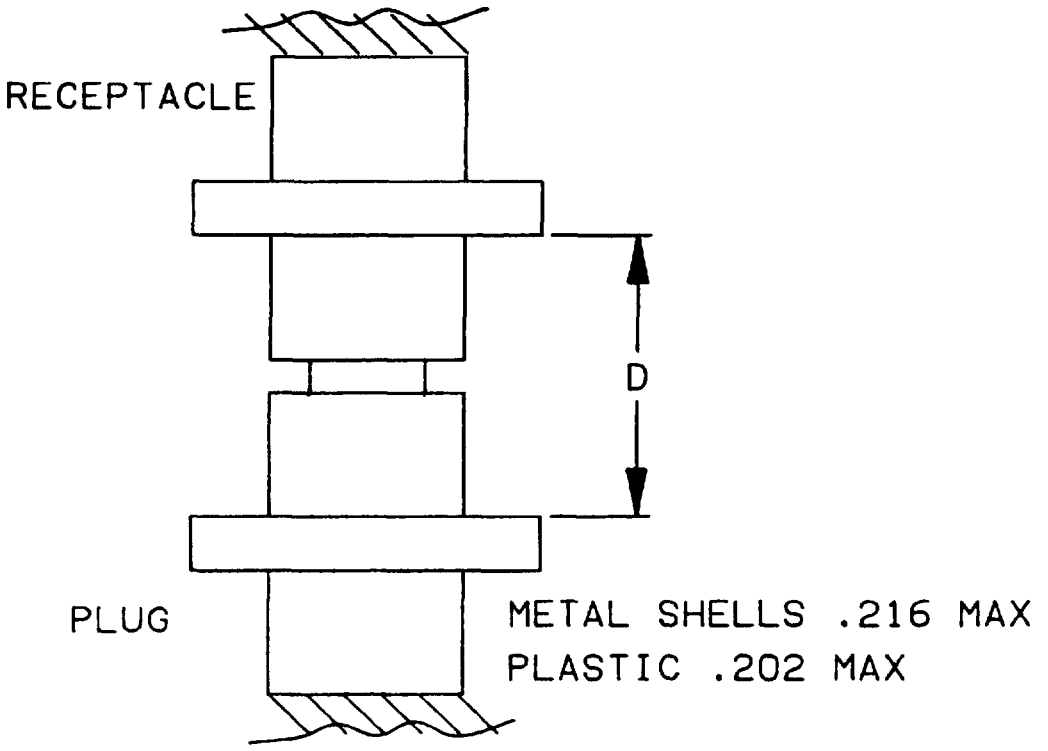

FIGURE 1. Connectors, fully mated.

Source: https://assist.dla.mil -- Downloaded: 2016-11-25T19:40Z
Check the source to verify that this is the current version before use.

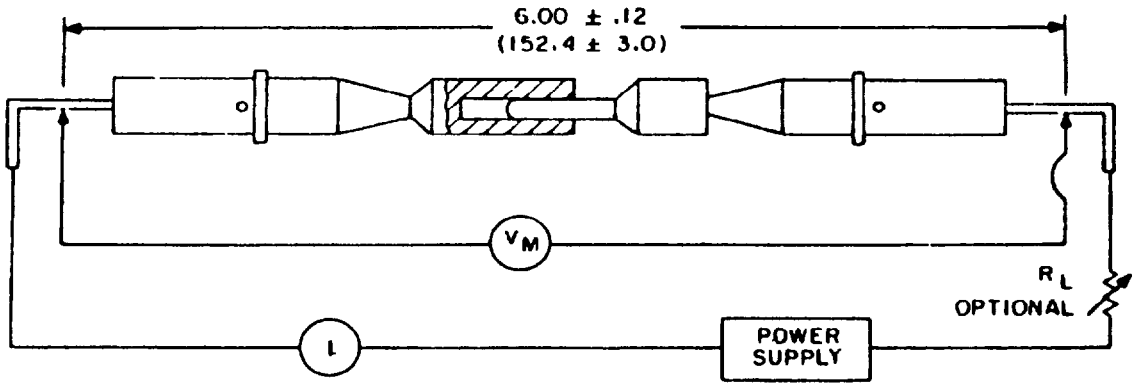

NOTES:
1. Voltage drop measurement connection points may be permanent connections and may be protected by potting or equivalent means.
2. A 6.00 inch dimension is not applicable to group B inspection (see 3.1). Total resistance equals the wire resistance plus the mated contact resistance.

Inches	mm
.0001	0.0025
.001	0.03
.002	0.05
.012	0.30
.0221	0.561
.0230	0.584
.032	0.81
.125	3.18

FIGURE 2. Test circuit for measurement of contact resistance.

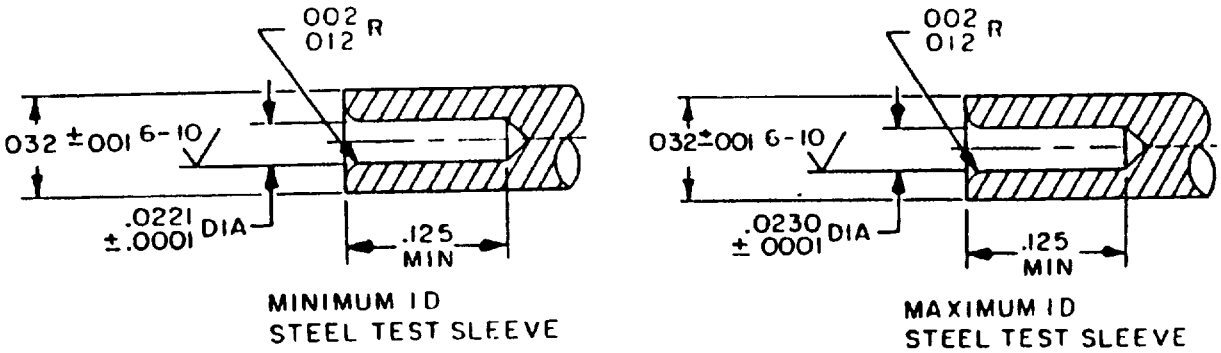

NOTES:
1. Dimensions are in inches
2. Metric equivalents are given for general information only

FIGURE 3. Test sleeve.

Source: https://assist.dla.mil -- Downloaded: 2016-11-25T19:40Z
Check the source to verify that this is the current version before use.

4.7.9 Temperature cycling. Unmated connectors shall be tested in accordance with method 1003, test condition A of MIL-STD-1344, except that the maximum temperature shall be 125°C +3°C, -0°C. At the completion of the last cycle, the connectors shall be returned to room temperature for further examination and shall meet the requirements of 3.5.8.

4.7.10 Humidity. The connectors shall be fully wired and mated. Then the connectors shall be subjected to testing in accordance with method 1002, type II of MIL-STD-1344 (except steps 7a and 7b shall not be required). The following exceptions and details as required by 3.5.9 shall apply:

a. Upon completion of step 6 of the final cycle, connectors shall be removed from the chamber, unmated, and surface moisture removed from the inserts. Immediately following removal of surface moisture, dielectric withstanding voltage test of 4.7.5.1 (sea level) and insulation resistance test of 4.7.6 shall be performed for all classes of connectors within 1 to 2 hours.

b. After the 24-hour conditioning period, the insulation resistance shall again be measured as specified in 3.5.5.

* 4.7.11 Resistance to soldering heat (see 3.5.10). All solder cup termination type connectors shall be tested as follows:

a. Unless otherwise specified, the applicable copper wire size 2 to 4 inches in length, properly prepared for the applicable solder cup size shall be inserted into the contact termination. Seven contacts or 20 percent of the contacts, whichever is greater, shall be tested.

b. The test specimens shall be fluxed (see 3.5.21) accordingly with liquid or other techniques.

c. Unless otherwise specified, a pencil type solder iron rated for 25 watts shall be used.

d. The solder iron shall be heated to a temperature of 360°C ±10°C and shall be applied along with SN-63 solder to the termination for a time duration allowing the solder to become liquid and remain in the liquid state for 4 to 5 seconds.

e. After application, the soldering iron shall be removed and a visual and mechanical inspection performed. The visual inspection shall be at 10X.

f. The connector shall show no evidence of distortion or damage to any area of the connector housing or evidence of contact misalignment. The contact shall meet the contact retention requirement (4.7.4).

* 4.7.12 Solderability.

a. Connectors with wire terminations (QQ-W-343) shall be tested for solderability in accordance with MIL-STD-202, method 208.

b. Connectors with wire cup termination shall be tested for solderability using the following methods.

(1) Test samples shall not be cleaned prior to soldering.

(2) Test sample connectors shall have the solder cups dipped in, or brushed with, flux type RMA just prior to the application of solder.

(3) A pencil type soldering iron shall be used, with temperature regulated to 300°C ±10°C to heat the test solder cups.

Source: https://assist.dla.mil -- Downloaded: 2016-11-25T19:40Z
Check the source to verify that this is the current version before use.

(4) After heating the test solder cups to a solder melt temperature, 63/37 tin-lead type solder shall be applied to fill the solder cup to a solder capacity which will result in solder wetting the entire cup surface and forming a solder fill meniscus across the open portion of the solder cup.

(5) The finished solder fill shall be smooth and slightly concave with clear wetting and adhesion to all internal surfaces of the solder cup. Solder beading or flux joints are not allowed. A solder fill similar to that shown as "preferred" on cup terminal, solder connection figure (figure 18) of DOD-STD-2000/3 is required. Inspection shall be aided by a 10X optical aid.

(6) Twenty percent, but not less than 7 contacts of test specimens shall be tested.

4.7.13 Vibration. The connector assembly shall be mounted, as specified herein and vibrated in accordance with method 2005, test condition IV of MIL-STD-1344. All contacts shall be wired in series with at least 100 milliamperes of current allowed to flow. A suitable instrument shall be employed to monitor the current flow and to indicate any discontinuity of contact or interruption of current flow. Requirements shall be as specified in 3.5.12.

4.7.13.1 Connector mounting. Each receptacle shall be mounted on a suitable fixture, which in turn shall be attached to a vibration table. A suitable sensor shall monitor the vibration of the receptacles at a point on or near the receptacle. A counterpart plug shall be engaged with the receptacle and shall be held by normal locking means. The wire bundles attached to the receptacle shall be clamped to nonvibrating points at least 4 inches from the rear of the receptacle. The wire bundles attached to the plug shall be clamped to a vibrating point 4 ±1/2 inches from the rear of the plug. The clamping length shall be chosen to avoid resonance of the wire bundles.

4.7.14 Shock. Mated connectors shall be subjected to test condition E, method 2004 of MIL-STD-1344. One shock shall be applied to each direction of the three major axes of the connectors. Receptacles shall be mounted similar to the mounting of 4.7.11.1. Plugs shall be engaged with the receptacles and shall be held by normal locking means. All contacts shall be wired in series with a minimum of 100 milliamperes of current allowed to flow and the wire bundles shall be clamped to structures that move with the connectors. A minimum of 8 inches of wire shall be unsupported behind the rear of the receptacle and 4 ±1/2 inches of wire shall be unsupported behind the rear of the plug. A suitable instrument shall be employed to indicate any discontinuity or interruption of current flow. Requirements shall be as specified in 3.5.13.

4.7.15 Durability. Counterpart connectors shall be mated and unmated 500 times at a rate of 200 ±100 cycles per hour in a manner to simulate actual service upon completion of durability conditioning, connectors shall be as specified in 3.5.14.

4.7.16 Salt spray (corrosion). Mated connectors shall be subjected to a salt spray test in accordance with method 1001, condition B of MIL-STD-1344. After exposure, connectors shall be thoroughly washed with tap water to remove all salt deposits and then shall be dried in a circulating air oven at a temperature of 38°C ±3°C for a period of 12 hours. Connectors shall then be visually examined for evidence of corrosion and subjected to the low circuit resistance test of 4.7.18, contact resistance test of 4.7.7, and mating and unmating force test of 4.7.3. After completion of salt spray testing, connector shall be as specified in 3.5.15.

Source: https://assist.dla.mil -- Downloaded: 2016-11-25T19:40Z
Check the source to verify that this is the current version before use.

4.7.17 Fluid immersion. Unmated connectors shall be immersed fully in the fluids specified below for the required periods. At least one connector shall be immersed in each fluid. After removal from the fluid, each connector shall remain for 1 hour in free air at room conditions. Subsequent testing shall be performed on connectors mated with the same mating connectors used previously in the test. The connector shall be mated per the requirement of 4.7.3. The mating force shall not exceed the force requirement of 3.5.2 at the distances denoted on figure 3. Following mating, connectors shall be cleaned in a suitable solvent to remove the cleaning solvents and lubricating oil.

a. Cleaning solvents: Freon and Perchloroethylene, US practical grade, 2 hours.

b. Lubricating oil conforming to MIL-L-23699: 20 hours.

* c. Coolant-dielectric fluid synthetic silicate ester base lubricant (coolanol 25 or equivalent): 1 hour ±1 minute.

4.7.18 Insert retention (class M connectors only). Inserts shall be subjected to axial loads in each direction. Loading shall be accomplished by applying air pressure or equivalent load. The pressure shall be increased gradually at a rate approximately 10 psi per second until the pressure specified in 3.5.17 is reached. The insert shall retain its normal position in the connector shell for at least 5 seconds at the maximum pressure specified in 3.5.17.

4.7.19 Crimp tensile strength (type I contacts only). Specimens of contacts crimped to wires shall be placed in a standard tensile-testing machine and an axial load shall be applied. The holding surfaces or clamps of tensile testing machine may be serrated to provide sufficient gripping or holding strength. The rate of travel of the head of the testing machine shall be approximately 1 inch per minute minimum. The crimp tensile shall be as specified in 3.5.18.

4.7.20 Low-signal level contact resistance (see 3.5.19). The low-signal level contact resistance test procedure shall be in accordance with method 3002 of MIL-STD-1344. The following detail shall apply: Environmental conditioning not required.

4.7.21 Thermal vacuum outgassing (space classes only). All nonmetallic materials, including lubricants, used in the manufacture of these connectors shall be tested in accordance with SP-R-0022 to determine the maximum TML of the original specimen mass and the VCM content of the original specimen mass. For the purpose of determining TML and VCM of connectors, the original specimen mass shall be the assembled connector mass excluding metallic parts. The TMC and VCM for the connectors may be determined by testing the specific materials of the connector and calculating the loss for the connector.

5. PACKAGING

5.1 Packaging requirements. The requirements for packaging shall be in accordance with MIL-C-55330.

6. NOTES

6.1 Intended use. These connectors are intended for general military use in nonenvironmental resisting applications where the operating temperature ranges from -55°C to +125°C. These connectors are not intended for use in blind mating rack and panel applications.

6.1.1 Class M connectors. Class M connectors may be used in applications where some exposure to high humidity is experienced.

Source: https://assist.dla.mil -- Downloaded: 2016-11-25T19:40Z
Check the source to verify that this is the current version before use.

6.1.2 Class P connectors. Class P connectors are intended for use in low humidity controlled environments such as telecommunications, computers, sealed enclosures, etc.

* 6.1.3 Space application. Cadmium is not to be used in aerospace applications.

6.2 Ordering data. Acquisition documents should specify the following:

a. Title, number, and date of this specification.

b. Title, number, and date of the applicable specification sheet and the complete part number (see 3.1).

6.3 Qualification. With respect to products requiring qualification, awards will be made only for products which are, at the time set for opening of bids, qualified for inclusion in Qualified Products List (QPL)-83513 whether or not such products have actually been so listed by that date. The attention of the contractors is called to these requirements, and manufacturers are urged to arrange to have the products that they propose to offer to the Federal Government tested for qualification in order that they may be eligible to be awarded contracts or purchase orders for the products covered by this specification. The activity responsible for this Qualified Products List is 2750 Air Base Wing, Electronic Support Division (2750 ABW/ES), Gentile Air Force Station, Ohio 45444; however, information pertaining to qualification of products may be obtained from the Defense Electronics Supply Center (DESC-E), 1507 Wilmington Pike, Dayton, Ohio 45444. Application for qualification tests shall be made in accordance with "Provisions Governing Qualification". Copies of SD-6 "Provisions Governing Qualification" may be obtained upon application to Commanding Officer, Naval Publications and Forms Center, 5801 Tabor Avenue, Philadelphia, PA 19120.

6.4 Subject term (key word) listing.

Arrangement
Connector
Contacts
Dielectric
Engagement
Force
Hardware
Inserts
Insulation resistance
Materials
Metals
Military specification
Packaging
Plug
Polarization
Receptacle
Shells

6.5 Changes from previous issue. The margins of this specification are marked with asterisks to indicate where changes (additions, modifications, corrections, deletions) from the previous issue were made. This was done as a convenience only and the Government assumes no liability whatsoever for any inaccuracies in these notations. Bidders and contractors are cautioned to evaluate the requirements of this document based on the entire content irrespective of the marginal notations and relationship to the last previous issue.

Source: https://assist.dla.mil -- Downloaded: 2016-11-25T19:40Z
Check the source to verify that this is the current version before use.

CONCLUDING MATERIAL

Custodians:
Army - CR
Navy - EC
Air Force - 85

Review activities:
Army - MI
Navy - AS, SH
Air Force - 11, 17, 99
DLA - ES

User activities:
Army - AT, ME
Navy - CG, MC
Air Force - 19

Preparing activity:
Air Force - 85

Agent:
DLA - ES

(Project 5935-3637)

Source: https://assist.dla.mil -- Downloaded: 2016-11-25T19:40Z
Check the source to verify that this is the current version before use.