INCH-POUND

MIL-PRF-1L
29 March 1996
SUPERSEDING
MIL-E-1K
30 December 1994

PERFORMANCE SPECIFICATION

ELECTRON TUBES

GENERAL SPECIFICATION FOR

This specification is approved for use by all Departments and Agencies of the Department of Defense.

1. SCOPE

1.1 Scope. This specification covers the general requirements and ratings for electron tubes used by the military departments.

1.2 Classification. This specification is applicable to electron tubes classified in, but not limited to, the categories listed below. The main category into which each tube is classified is indicated in the title of the tube specification sheet (TSS). The subcategory is included as the initial item under the description heading: For example, ELECTRON TUBE, KLYSTRON - - - DESCRIPTION: Reflex oscillator.

1. Beam Switching
2. Cathode Ray
   a. Electrostatic or Magnetic Focus
   b. Electrostatic or Magnetic Deflection
   c. Multigun (specify number of guns)
3. Cathode-Ray Charge Storage
   a. Visual Output (direct view)
   b. Electrical Output
4. Cold Cathode
   a. Triode
   b. Rectifier
5. Corona Voltage Regulators
6. Cross Field Amplifier
7. Electron Multiplier
8. Electron Ray Indicator
9. Gas-Switching
   a. ATR (antitransmit-receive)
   b. Dual-TR (transmit-receive)
   c. Pre-TR
   d. TR
10. Graphic Indicator
    a. Numerical Indicator
11. Gyrotron
12. Ignitron
13. Image Converter
14. Image Orthicon
15. Klystron
    a. Reflex Oscillator
    b. Amplifier
    c. Pulse
    d. Continuous Wave (CW)
16. Magnetron
    a. Pulse
    b. Coaxial
    c. Continuous Wave (CW)
    d. Voltage Tunable
17. M-Type Backward Wave
18. Negative Grid (microwave)

Beneficial comments (recommendations, additions, deletions) and any pertinent data which may be of use in improving this document should be addressed to: Defense Electronics Supply Center, ATTN: DESC-ELD, 1507 Wilmington Pike, Dayton, OH 45444 5765, by using the Standardization Document Improvement Proposal [illegible] at the end of this document or by letter.

FSC 5960

AMSC N/A
DISTRIBUTION STATEMENT A. Approved for public release; distribution is unlimited.

Source: https://assist.dla.mil -- Downloaded: 2016-11-03T17:33Z
Check the source to verify that this is the current version before use.

1.2 Classification. - Continued.

19. Noise Source
    a. Vacuum Diode
    b. Gas Discharge

20. O-Type Backward Wave

21. Phototube
    a. Gas
    b. Infrared
    c. Multiplier

22. Power or Transmitting
    a. Diode
    b. Triode
    c. Tetrode
    d. Pentode
    e. Rectifier

23. Pulse Modulator
    a. Hydrogen
    b. Vacuum

24. Radiation Counter
    a. Geiger Mueller

25. Receiving
    a. Diode
    b. Triode
    c. Tetrode
    d. Pentode
    e. Rectifier
    f. Power

26. Stabilotron

27. Thyratron

28. Traveling Wave (or forward wave)

29. Vidicon

30. Voltage Regulator
    a. Glow Discharge

2. APPLICABLE DOCUMENTS

2.1 General. The documents listed in this section are specified in sections 3 and 4 of this specification. This section does not include documents cited in other sections of this specification or recommended for additional information or as examples. While every effort has been made to ensure the completeness of this list, document users are cautioned that they must meet all specified requirements documents cited in sections 3 and 4 of this specification, whether or not they are listed.

2.2 Government documents.

2.2.1. Specifications, and standards. The following specifications, and standards form a part of this document to the extent specified herein. Unless otherwise specified, the issues of these documents are those listed in the issue of the Department of Defense Index of Specifications and Standards (DODISS) and supplement thereto, cited in the solicitation (see 6.2).

SPECIFICATIONS

MILITARY

MIL-I-10 - Insulating Compound, Electrical, Ceramic, Class L.

STANDARDS

MILITARY

MIL-STD-129 - Marking for Shipment and Storage (part 1 of 4 parts).
MIL-STD-1311 - Test Methods for Electron Tubes.

(Unless otherwise indicated, copies of above specifications, and standards are available from the Standardization Document Order Desk, 700 Robbins Avenue, Building 4D, Philadelphia, PA 19111-5094.)

2.3 Non-Government publications. The following documents form a part of this document to the extent specified herein. Unless otherwise specified, the issues of the documents which are DoD adopted are those listed in the issue of the DODISS cited in the solicitation. Unless otherwise specified, the issues of documents not listed in the DODISS are the issues of the documents cited in the solicitation (see 6.2).

ELECTRONIC INDUSTRIES ASSOCIATION (EIA)

RS-235 Color Codes for Microwave Devices with Wire Leads.

(Application for copies should be addressed to the Electronic Industries Association, 2001 Pennsylvania Avenue, NW, Washington, DC 20006.)

Source: https://assist.dla.mil -- Downloaded: 2016-11-03T17:33Z
Check the source to verify that this is the current version before use.

2.4 Order of precedence. In the event of a conflict between the text of this document and the references cited herein (except for related associated specifications, or specification sheets), the text of this document takes precedence. Nothing in this document, however, supersedes applicable laws and regulations unless a specific exemption has been obtained.

3. REQUIREMENTS

3.1 General. The manufacturer of electron tubes, in compliance with this specification, shall have and use production and test facilities and a quality and reliability assurance program adequate to assure successful compliance with the provisions of this specification and TSS. Adequacy of an electron tube manufacturer to meet the requirements of this specification shall be determined by the Government qualifying activity. The individual item requirements shall be as specified in the TSS and herein. Only electron tubes which are inspected for and meet all the requirements of this specification and the TSS shall be marked as compliant and delivered. Any military specification, standard, or handbook referred to in this specification may be replaced by an equivalent commercial standard as determined by the preparing activity.

3.1.1 Tube specification sheet (TSS). The individual electron tube requirements shall be as specified herein and in accordance with the applicable TSS. The following order of precedence and exceptions shall govern:

a. Order of precedence: In the event of conflict between this specification, MIL-STD-1311, and the TSS, and unless otherwise specified (see exceptions below), the TSS shall take precedence. To determine applicable test conditions, however, the following order shall govern:

(1) The test condition specified on the TSS for a particular test method, as indicated in the "Conditions" column.

(2) The test condition specified in a particular test method.

(3) The general test conditions specified on the TSS (usually located on the first page).

(4) The test conditions specified in MIL-STD-1311 under "General" instructions and conditions.

b. Exceptions:

(1) Limited coordination (LC) specification. The marking requirements of this specification shall apply to all tubes acquired to single-service (LC) specifications. (The "JAN" prefix shall be used in lieu of "USA", "USAF", or "USN").

(2) Military designator "M". Use of the letter "M" as a military designator on tubes and specification sheets shall be discontinued and where already assigned, shall be disregarded.

(3) MIL-STD-1311, method 1501A. If there are conflicting requirements between this specification, MIL-STD-1311, and the TSS, the TSS requirements shall be secondary.

3.1.2 Terms, definitions, methods, abbreviations, and symbols. The terms, definitions, methods, abbreviations, and symbols used in conjunction with electron tubes shall be in accordance with appendices A and B.

3.2 Qualification. Unless exception is taken by the TSS, all tubes furnished under this specification shall be products that are authorized by the qualifying activity for listing on the applicable qualified products list before contract award (see 4.1.b, 4.2, 6.3, and appendix E).

3.3 First article. When specified, a sample shall be subjected to first article inspection (see 4.1.c and appendix F).

3.4 Critical interfaces. The critical interfaces of an electron tube shall be as specified herein (appendices C and D) and on the TSS.

3.4.1 Base material. Unless otherwise specified, all electron tube bases shall be fabricated from material having suitable physical, electrical, and mechanical properties to meet all the specified requirements of the TSS.

3.4.2 Base connections. Electrode connections to base pins shall be as specified. Pins designated as "int con" are not suitable for connection to external circuits. Pins designated as "nc" shall have no connections made to them within the tube.

Source: https://assist.dla.mil -- Downloaded: 2016-11-03T17:33Z
Check the source to verify that this is the current version before use.

3.4.3 Base cementing. Receiving tubes and cathode-ray tubes which have leads soldered into the pins shall have the base cemented to the envelope. Base cement is not required for metal tubes, or metal enclosed glass tubes with envelope skirt mechanically crimped to the base, or for button heater solid lead receiving tubes.

3.4.4 Color coding. Insulation on flying leads for microwave tubes shall be color coded in accordance with EIA Standard RS-235.

3.4.5 Absolute ratings. The values specified on the TSS under "maximum" or "minimum" are based on the "absolute system" and are not to be exceeded under any service conditions. These ratings are limiting values outside which the serviceability of any individual tube may be impaired. In order not to exceed absolute ratings, the designer has the responsibility of determining an average design value for each rating below and absolute value of that rating by a safety factor so that the absolute values will never be exceeded under any usual conditions of supply-voltage variation, load variation, or manufacturing variations in the equipment itself. It does not necessarily follow that combination of absolute maximum ratings can be attained simultaneously. The maximum and minimum ratings designate the maximum or minimum of the absolute value of that rating regardless of polarity.

3.4.5.1 Barometric pressure (altitude) rating. In the event that the specified rating is exceeded, reduction of instantaneous voltages (excluding filament or heater voltage) may be required.

3.4.5.2 Receiving tube ratings. Receiving tube ratings specified on the TSS are absolute maximum values for an individual tube, and equipment should be designed with this fact in mind. However, these ratings may be exceeded only as indicated in 3.4.5.2.1 and 3.4.5.2.2 without appreciable deterioration in tube life.

3.4.5.2.1 Anode voltage. Unless otherwise specified, the average anode voltage (averaging time 0.1 second) should not exceed the maximum rated dc anode voltage; and the peak positive anode voltage should not exceed twice the maximum rated dc anode voltage.

3.4.5.2.2 Screen voltage. The maximum screen voltage may be exceeded when all the following conditions are met:

a. The screen voltage does not exceed the dc anode voltage rating under any operating conditions.

b. The anode voltage rating is greater than the screen voltage rating.

c. The average screen dissipation does not exceed values given by the following formula:

$$P_{g}2 \leq P_{g}2 \text{ (max rating)} \left[1 - \left(\frac{E_{c2} - E_{c2}(\text{max rating})}{E_{b}(\text{max rating}) - E_{c2}(\text{max rating})}\right)^{2}\right]$$

The formula applies when the average screen voltage is between the maximum rated dc screen voltage and the maximum rated dc anode voltage.

3.4.5.2.3 Reduced pressure (altitude) rating. This rating is applicable to all subminiature, miniature, and other wafer (button) header receiving tube types except high-voltage rectifiers and is based on the minimum pin or lead spacings specified on these types. It does not take into account the effects of tube sockets, any other terminating devices, and any environmental effects, such as radiation, which may exist simultaneously at any altitude. Figure 1 specifies the maximum rating of the instantaneous voltage between adjacent pins as a function of air pressure. Table I indicates an altitude/pressure cross-reference.

NOTE: For operation at any pressure (altitude), the maximum-instantaneous voltage between any adjacent pins is limited in accordance with the rating in figure 1. The equipment designer is cautioned to consider that voltage breakdown is only one factor influenced by altitude, and that other tube ratings, especially temperature, must also be observed. If instantaneous operating voltages not exceeding 280 volts are used between adjacent pins, these types will not have to be derated for altitude effects.

Source: https://assist.dla.mil -- Downloaded: 2016-11-03T17:33Z
Check the source to verify that this is the current version before use.

TABLE I. Altitude/pressure conversion.

Altitude (x 1,000 ft)	Pressure Torr (mmHg)	Altitude (x 1,000 ft)	Pressure Torr (mmHg)
50	87.49	130	2.27
55	68.88	140	1.51
60	54.24	150	1.02
70	33.66	160	0.697
80	21.01	170	0.478
90	13.21	180	0.326
100	8.36	190	0.221
110	5.33	200	0.148
120	3.45		

3.5 Marking. All tubes shall be marked in a legible and permanent manner on the base, envelope, or shell with the information specified in 3.5.1 through 3.5.10, as applicable. Additional marking (including commercial designation) may be applied; providing it does not interfere with the marking required herein and is completely separated therefrom (see 4.3.7 and method 1105).

a. Permanent-marking requirements: The following information, as applicable, shall be marked on the tube, as specified in 3.5.b.

(1) Type number (see 3.5.1).

(2) "JAN" prefix (see 5.5.2).

(3) Lot identification (lot date code) (see 3.5.3).

(4) Manufacturer's designating symbol (CAGE code) (see 3.5.5).

(5) Service-life guarantee (as required) (see 3.5.8).

b. Permanent-marking: The information specified in 3.5.a shall be applied to the tube by a process, such as grit blasting, etching, baked-enamel silk screening, permanent adhesive decals or labels, or any other method that will assure permanence equal to these methods of marking. The marking shall be permanent to the degree that removal of the information can only be accomplished by deliberate mutilation of the marking, or destruction of the tube.

c. Secondary marking requirements: Required information, other than that specified in 3.5.a shall be marked on the tube by any method that will assure legibility after prolonged use of the tube.

3.5.1 Type number. The tube shall be designated by the type number as indicated in the TSS. The tube shall be marked with this type number in accordance with the requirements specified herein and by the TSS.

3.5.2 "JAN" prefix. The United States Government has adopted, and is exercising legitimate control over the certification marks "JAN" and "J", respectively, to indicate that items so marked or identified are manufactured to, and meet all the requirements of specifications. Accordingly, items acquired to, and meeting all of the criteria specified herein and in applicable specifications shall bear the certification mark "JAN" except that items too small to bear the certification mark "JAN" shall bear the letter "J". The "JAN" or "J" shall be placed immediately before the part number except that if such location would place a hardship on the manufacturer in connection with such marking, the "JAN" or "J" may be located on the first line above or below the part number. Items furnished under contracts or orders which either permit or require deviation from the conditions or requirements specified herein or in applicable specifications shall not bear "JAN" or "J". In the event an item fails to meet the requirements of this specification and the applicable specification sheets or associated specifications, the manufacturer shall remove completely the military part numbers and the "JAN" or the "J" from the sample tested and also from all items represented by the sample. The "JAN" or "J" certification mark shall not be used on products acquired to contractor drawings or specifications. The United States Government has obtained Certificate of Registration No. 504, 860 for the certification mark "JAN" and Registration Number 1,586,261 for the certification mark "J".

Source: https://assist.dla.mil -- Downloaded: 2016-11-03T17:33Z
Check the source to verify that this is the current version before use.

3.5.3 Lot identification (lot date code). Each tube shall be marked with the manufacture date; the date the tube was produced. The lot date code shall consist of a four digit number; the first two digits shall be the last two digits of the calendar year of manufacture, the last two digits shall indicate the calendar week of manufacture. When the number of the week is a single digit, it shall be preceded by a zero.

3.5.4 Manufacturer's identification. The tube shall be marked with the name or trademark of the manufacturer who produced the item. The marking shall not detract from the tube designation. The equipment manufacturer's name or trademark shall not appear on the tube unless the tube manufacturer supplying the tube for the contract is also the equipment manufacturer.

3.5.5 Manufacturer's designating symbol (CAGE code). The manufacturer shall include the manufacturer's designating symbol or CAGE code number as given in Cataloging Handbooks H4-1, H4-2, and H4-3 (Federal Supply Code for Manufacturers).

3.5.6 Country of origin. The phrase "MADE IN U.S.A.", or the abbreviation "U.S.A.", shall be marked in characters smaller than those used for the tube designation. For tubes made in other countries, the phrase shall be changed accordingly.

3.5.7 Radioactive marking. Tubes with intentionally added radioactive isotopes shall be marked when required in accordance with MIL-STD-129. Where physical size precludes printing all required data on the tube itself, the standard radiation symbol (Code of Federal Regulation, Title 10 Atomic Energy) or the radiation symbol and the words "accountability required", where applicable may be adopted (see appendix B for correct symbol).

3.5.8 Service-life guarantee. Tubes sold under service-life guarantees shall be marked with the following additional markings; contract number and the number of hours guaranteed (see 4.5 and 6.2).

3.5.9 Inadequate marking area. Tubes having inadequate marking area for all applicable markings (due to size or effects on operating characteristics of the tube) shall have the type number, the JAN prefix, and as many of the other applicable markings as possible placed on the tube with the following order of precedence:

a. Type number.

b. JAN prefix.

c. Lot date code (lot identification).

d. Manufacturer's designating symbol (CAGE code).

e. Manufacturer's identification.

f. Country of origin.

No required markings may be omitted without written approval obtained from the qualifying activity prior to shipment. Required markings omitted from the tube for the reasons indicated above shall be placed on the unit pack.

3.5.10 Shelf life. The period of shelf life shall be marked on the tube, package and pack when the shelf life is specified in the TSS (see 4.6).

3.6 Workmanship. Electron tubes shall be manufactured and processed in a careful and workmanlike manner, in accordance with good design and sound engineering practice, and to the requirements of this specification.

4. VERIFICATION

4.1 Classification of inspections. The inspection requirements shall be classified and indicated on the TSS by the groupings specified as follows:

a. General: The "Qualification" requirement, and any exceptions to general provisions of this specification (such as deviation from standard requirements for holding periods, preheating, or preparation for delivery) shall be indicated under this heading. First article inspection is required for TSS's that state "not required".

Source: https://assist.dla.mil -- Downloaded: 2016-11-03T17:33Z
Check the source to verify that this is the current version before use.

b. Qualification: All tests specified on the TSS are required for qualification approval (QA); however, those tests grouped under this heading on the TSS are to be performed only during qualification inspection (see 3.2, 4.2, 6.3, and appendix E).

c. First article inspection. For first article inspection procedures, see appendix F herein.

d. Quality conformance inspections. QCI parts 1, 2, and 3 (QCI-1, QCI-2, and QCI-3) are made on a lot sampling basis to assure the desired quality of major characteristics which control design parameters, life and environmental characteristics (see 4.3).

e. Destructive tests. Tubes used for conducting tests designated as destructive below, or in the test method, shall not be delivered under contract or order for use by the Government. Except for stability, and survival rate, life tests shall be considered destructive. In addition, the following MIL-STD-1311 test methods are designated as destructive:

Destructive Tests	Method
Sweep frequency vibration fatigue	1031
Vibration fatigue	1031
Vibration, endurance at resonance (when specified on the TSS)	1032
Shock	1041
Base pin solder depth (if X-ray techniques are not used)	1111
Lead fatigue (subminiature tube)	1116
Glass-to-lead seal strain	1119
Filament burnout	1202
Mechanical tuning fatigue	4223

4.1.1 Testing provisions and inspection conditions (see 3.1). At the discretion of the acquiring activity, any tube whose failure is due to operator error or test equipment malfunction, may not be considered a tube failure. Such tubes may be replaced by randomly selected tubes from the same lot.

4.1.2 Lot sizes for tubes listed on generic specification sheets. If sampling plan, test conditions, test limits, and internal construction of tube types covered by a single generic specification sheet are identical, lot sizes for tests reference on generic TSS's may be combined to determine the sample size for QCI-1, QCI-2, and QCI-3 tests. The sample may be composed of either type(s) or combination thereof. Any additional cross-clearance considerations shall be stated on the individual TSS.

4.2 Qualification (see 6.3). Qualification testing shall be in accordance with table II herein. For information pertaining to qualification, or authorization for qualification testing, the manufacturer shall contact the qualifying activity for this specification. (See 3.2, 4.1.b, 6.3, and appendix E)

4.2.1 Samples and acceptance criteria.

a. The samples for qualification tests shall be representative of the manufacturer's normal production, shall be produced by and at the plant where manufacturing is to be accomplished, and shall be selected from current completely processed production.

b. When not specified in table II, two samples shall be selected with no failures permitted.

c. A bogey tube, if specified, shall be in addition to the sample specified herein and may be a tube that has been stabilized by life-test operation.

d. When more than one tube type is covered by a single TSS (generic specification) and complete qualification testing is being conducted for one of the tube types, only those tests which differ (except heater voltage test condition) need be conducted to obtain qualification for all other types covered by the TSS. In the case of cathode-ray tubes, where more than one phosphor type is shown on a generic TSS, a minimum sample of four tubes of any applicable phosphor or combination of phosphors shall be tested for all requirements; however, only one additional tube need be tested for the other remaining phosphors. This tube shall be tested for phosphor properties only.

e. Failures in excess of those allowed in table II or in 4.2.1.b, shall be cause for refusal to grant qualification approval.

Source: https://assist.dla.mil -- Downloaded: 2016-11-03T17:33Z
Check the source to verify that this is the current version before use.

TABLE II. Sample and acceptance criteria for qualification.

Test method if specified herein (3.1.2), or on the TSS		Sample size		Destructive test (D) (see 4.1.e)
MIL-STD-1311 Test Method or MIL-PRF-1 appendix	Title	Applicable paragraph	Number of samples	
1/ Appendix D	Mechanical inspection, dimensions	4.2.1	2	---
2/ ----	Mechanical resonance (see TSS)	4.2.1	3	---
1/ 1031	Vibration, low frequency (25 Hz)	4.2.1	2	---
1031	Vibration, variable frequency	4.2.1	2	---
1031	Vibration fatigue	4.2.1	2	D
1041	Shock	4.2.1	2	D
----	Shock (see TSS)	See TSS	See TSS	---
1/ 1101	Secureness of base, cap, or insert	4.2.1	2	---
1/ 1105	Permanence of marking	3.5	2	---
1/ 1111	Base pin solder depth	----	2	3/
1/ 1116	Lead fatigue (subminiature)	----	2	D
1/ 1119	Glass-to-lead seal strain	----	2	D
1/ 1121	Base strain (miniatures)	----	2 4/	---
1/ 1126	Glass-envelope strain (glass tube)	----	3	---
1202	Filament burnout	----	2	D
1206	Grid emission	----	2	---
1/ ----	All electrical (not listed in this table)	4.2.1	2	---
----	Life tests	4.3.8	---	---
5/ 1501	Intermittent life	4.2.4	4	D
6/ 7/ 8/ ----	Operational life	4.2.3	2	D
1506	Heater-cycling life	4.2.4	3	D
1511	Cathode interface life	----	See TSS	D
1516	Stability life	4.2.3	3	---
2126	Glass strain (receiving tubes)	----	2	---
4223	Mechanical tuning fatigue	4.2.3	2	D

1/ Electrical sample may be used for these tests.

2/ Vibration, variable frequency may be used for these tests.

3/ Method 1111 becomes a destructive test if X-ray techniques are not used and additional samples will be required.

4/ Use acceptance numbers given in 4.3.5.3.

5/ Low-failure rate tubes: See applicable TSS.

6/ For dual testing in any one life-test group, half the number of tubes shall be subjected to each test. When the number of tubes is odd, the sample shall be made even by adding one tube.

7/ Life tests are based on degradation of certain characteristics. These characteristics must be within the life-tests end point limits at the completion of 80 percent of the specified life tests. If more than one tube is selected, then acceptance is based on the average life of those tubes tested; however, no tube can be tested for more than the specified life and no more than the specified life hours for any one tube can be credited to the total hours for the purpose of calculating the average hours.

8/ See 4.2.3 concerning life-test groups A, B, C, D, and S.

Source: https://assist.dla.mil -- Downloaded: 2016-11-03T17:33Z
Check the source to verify that this is the current version before use.

4.2.1.1 Marking of samples. The commercial designation may be used instead of the "JAN" prefix marking for qualification test samples. The marking will be inspected for legibility and traceability only.

4.2.2 Qualification by similarity. Tubes of similar classification manufactured on the same production line, involving the same process, may be granted qualification by the qualifying activity provided the manufacturer already has a qualified tube of equal or greater complexity on the current QPL.

4.2.3 Operational life. Life test groups A, B, C, D, and S as listed on the individual TSS's, have been combined into a single life test called operational life.

4.2.4 Life-test data. Complete data on life test, whether performed under the cognizance of the Government or certified by the manufacturer as having been performed on production tubes of the same design as the specimens submitted for qualification inspection, shall remain available for inspection by the cognizant government inspector. The number of samples for which life-test data are required shall be as shown in table III.

4.2.5 Prior Government approval. Invitation for bids should provide that the preparing activity reserves the right to waive the requirements for first article samples as to those bidders offering a product which has been previously acquired, tested, or reviewed by the qualifying activity, and that bidders offering such products who wish to rely on such production or test, must furnish evidence with the bid that prior Government approval is presently appropriate for the pending acquisition.

4.2.6 Retention of qualification. For information pertaining to retention of qualification, the manufacturers shall contact the qualifying activity for this specification.

4.2.7 Discontinuance of production. In the event that a manufacturer plans to discontinue production of a tube type or types entirely, the product will remain on the QPL as long as stock remains and the manufacturer notifies the qualifying activity within thirty days after the last product run has been completed. The manufacturer agrees to store overrun from the last production, and when these quantities are exhausted, will notify the qualifying activity to have product listing removed from the QPL.

4.3 Quality conformance inspection. Testing shall be in accordance with the QCI-1, QCI-2, and QCI-3 listed in the individual TSS and as specified herein.

4.3.1 Sampling plans. This specification utilizes an accept on zero defect (c = 0) sampling plan. Sampling shall be in accordance with table II. Acceptance sampling levels indicated on the individual TSS's shall be cross referenced to the appropriate sampling categories in table III. See definition of lot in appendix A.

TABLE III. Sampling plans.

Category	I	II	III	IV	V	VI	VII	VIII	IX	X	XI	XII	XIII	XIV	XV	XVI
Acceptance Level	.010	.015	.025	.040	.065	.10	.15	.25	.40	.65	1.0	1.5	2.5	4.0	6.5	10.0
LOT SIZE																
2 to 8	*	*	*	*	*	*	*	*	*	*	*	*	5	3	2	1
9 to 15	*	*	*	*	*	*	*	*	*	*	13	8	5	3	2	1
16 to 25	*	*	*	*	*	*	*	*	*	20	13	8	5	3	3	1
26 to 50	*	*	*	*	*	*	*	*	32	20	13	8	5	5	5	2
51 to 90	*	*	*	*	*	*	80	50	32	20	13	8	7	6	5	2
91 to 150	*	*	*	*	*	125	80	50	32	20	13	12	11	7	6	2
151 to 280	*	*	*	*	200	125	80	50	32	20	20	19	13	10	7	4
281 to 500	*	*	*	315	200	125	80	50	48	47	29	21	16	11	9	4
501 to 1,200	*	800	500	315	200	125	80	75	73	47	34	27	19	15	11	4
1,201 to 3,200	1250	800	500	315	200	125	80	116	73	53	42	35	23	18	13	4
3,201 to 10,000	1250	800	500	315	200	125	80	116	86	68	50	38	29	22	15	4

Source: https://assist.dla.mil -- Downloaded: 2016-11-03T17:33Z
Check the source to verify that this is the current version before use.

4.3.1.1 Default sampling plans. If the individual TSS does not specify the acceptance levels the following plans shall apply:

a. QCI-1: Sampling category X shall be used, except for visual and mechanical inspection; see appendix C and D.

b. QCI-2: Sampling category XIV shall be used.

c. QCI-3: Sampling category XVI shall be used.

4.3.2 Normal inspection. Normal inspection shall be the listed sampling category.

4.3.3 Tightened inspection. Tightened inspection shall consist of decreasing the category by one (i.e. if the normal inspection category is X, the tightened inspection sampling plan would be category IX).

4.3.4 Nonconforming lots. A nonconforming lot shall be reworked or retested 100 percent, or both, by the manufacturer prior to resubmitting the lot to QCI. If the nonconforming test item is of such a nature as to require rework, the lot shall be subjected to all of QCI, part 1 testing. If the nonconforming test item is of such a nature as to require retest, then the lot shall be tested for those characteristics that were nonconforming.

4.3.5 Base strain test, miniature tube, sampling (method 1121). Tightened inspection shall be in effect initially and shall continue in effect until the criteria specified herein for normal inspection have been met.

4.3.5.1 Normal inspection. Inspection shall move from tightened to normal after all of the following have occurred:

a. There has been no change of the tube type on the sealing and exhaust unit during the testing of the last five samples.

b. Not more than a total of eight defects have been found in the last five samples.

c. No rejection has occurred in the last five samples.

4.3.5.2 Sampling. The sample shall consist of 10 tubes selected at random from the production of each sealing-and-exhaust unit. This sample size n = 10, shall be used for both tightened and normal inspection. For normal inspection, the sample shall be selected once during each regular work shift. For tightened inspection, the sample shall be selected every hour. In either case, the first sample shall be selected at the start of each work shift.

4.3.5.3 Acceptance and rejection criteria. The production lot represented by the sample shall be:

a. Accepted if not more than one defective for class "A", "B", or "C" defects respectively, or if not more than a total of two defectives are found in the sample (see method 1121).

b. Rejected if two or more defectives for class "A", "B", or "C" defects, respectively, or if a total of three or more defectives are found in the sample.

4.3.5.4 Rejected tubes. If the tubes are rejected on this test, all production from this exhaust unit during the period between the present and previous samples, shall be 100 percent strain-tested for that class of defect which caused rejection. The results of the retest shall be submitted to quality control, and these data shall be used as a basis for acceptance of the rejected lot. These results shall not be used in the cumulative record.

4.3.5.5 Records. A record of all defectives shall be maintained for each sealing-and-exhaust unit. This record shall show the exhaust unit number, the date and time of sample, the number of defectives in each group, the total defectives, and the rejections occurring in the last five samples.

4.3.6 Shock test sampling (method 1041). The test shall be conducted on the initial lot and thereafter on a lot approximately every 12 months. When one lot has passed, the 12-month rule shall apply.

4.3.7 Permanence of marking sampling (method 1105). When applicable, method 1105, shall be performed prior to shipment on tubes which have received final processing for marking in compliance with the requirements of 3.5.

Source: https://assist.dla.mil -- Downloaded: 2016-11-03T17:33Z
Check the source to verify that this is the current version before use.

4.3.8 Life testing.

a. Life-test provisions: Life testing shall be conducted as specified herein, except when tubes submitted in accordance with this specification are part of the manufacturer's commercial production, and are life tested by the manufacturer under the specified TSS conditions (or conditions of greater stress), and in at least the required quantities, the procuring activity may accept the results of these life tests in lieu of the life-test specified herein. Prior to life testing, the manufacturer may subject the tubes to any other TSS tests. If a tube is found to be outside the initial TSS limits or has mechanical defects, it may be replaced by another randomly selected sample from the same lot (see 4.1.e.).

b. Life-test sampling: The tubes comprising the sample shall be selected at random throughout production in a manner representative of the lot. However, when a manufacturer is in continuous production for an extended period on a particular type, the sample may be selected from the first 10 percent of the production lot. For dual testing in any one life-test group, half the number of tubes shall be tested in each test. When the sample is an odd number of tubes, it shall be made even by adding another tube. The total number of tubes from any one lot subjected to a particular life test shall be considered the life-test sample.

c. Life-test sampling (small lots): A life test lot shall be a maximum of one month production, except that a maximum of six month's production of 500 tubes, or less, shall apply to form a single life-test lot (see appendix A for lot definition).

d. Reduced life-test sampling: A manufacturer becomes eligible for reduced life-test sampling when they have produced 3 lots with no life-test defects, for the same tube type or structurally identical tube type, in a 24 month time period. Reduced life testing will consist of performing life-test sampling, on the eligible tube type(s), once in each subsequent 12 month period. The manufacturer becomes ineligible after a lot fails life-test, and must reestablish eligibility as mentioned previously. Verification of eligibility must be submitted to, and is subject to the approval of, the preparing activity for this document.

4.3.9 Life-test sampling plans. Refer to table III for the following listed sampling categories.

4.3.9.1 Stability life-test (method 1516). Sampling category XIV shall be used.

4.3.9.2 Intermittent life-test (method 1501). Sampling category XIV shall be used.

4.3.9.3 Heater cycling life-test (method 1506). Sampling category XIV shall be used.

4.3.9.4 Group life-tests. Life-test groups A, B, C, D and S as listed in the TSS's, have been combined into the operational life test. Operational life testing shall use sampling category XVI.

4.4 Inspection conditions. Unless otherwise specified, all inspections shall be performed in accordance with the test conditions specified herein and MIL-STD-1311.

4.5 Service-life guarantee. When service-life guarantee is specified on the TSS, or in the contract or order (see 6.2), the tube shall not be subjected to the life test but shall have a service-life guarantee. The period of this service-life guarantee shall be as specified on the TSS, subject to modification in the contract or order. Use of the service-life guarantee, in lieu of life-testing, is subject to the approval of the preparing activity for this document.

4.6 Shelf life. In general, electron tubes have an indefinite shelf life; however, where specific shelf life has been determined and is specified in the TSS, the marking shall be as specified in 3.5.10.

4.7 Delayed shipment of inspected tubes. Tubes which have been held in storage within the manufacturer's facilities, or at other than the manufacturer's facilities, shall be in full compliance with this specification upon shipment.

4.8 Rejected lots. If an inspection lot is rejected, the supplier may rework the lot to correct the defects, or screen out the defective units, then resubmit for reinspection. Resubmitted lots shall be inspected using tightened inspection. Such lots shall be separate from new lots, and shall be clearly identified as reinspected lots by the manufacturer's lot records.

Source: https://assist.dla.mil -- Downloaded: 2016-11-03T17:33Z
Check the source to verify that this is the current version before use.

4.9 Disposition of sample units.

a. Sample units which have passed all the nondestructive tests may be delivered on the contract or purchase order, if the lot is accepted and the sample units are still within the specified tolerances.

b. Sample units which have been subjected to destructive tests shall not be delivered on the contract or purchase order.

c. Any tube known to have failed the provisions of the either MIL-PRF-1, MIL-STD-1311, or sample tubes which do not meet the initial limits after nondestructive life tests, shall not be delivered on the contract or purchase order.

5. PACKAGING

5.1 Packaging. For acquisition purposes, the packaging requirements shall be as specified in the contract or order (see 6.2). When actual packaging of material is to be performed by DoD personnel, these personnel need to contact the responsible packaging activity to ascertain requisite packaging requirements. Packaging requirements are maintained by the Inventory Control Point's packaging activity within the Military Department or Defense Agency, or within the Military Department's System Command. Packaging data retrieval is available from the managing Military Department's or Defense Agency's automated packaging files, CD-ROM products, or by contacting the responsible packaging activity.

6. NOTES

(This section contains information of a general or explanatory nature that may be helpful, but is not mandatory.)

6.1 Intended uses. Equipment using tubes manufactured in accordance with this specification should be designed so that the tubes perform satisfactorily in the normal service for which the equipment is designed. The use of characteristics not controlled by this specification is not permitted unless the command or service concerned has specifically approved such use.

6.2 Acquisition requirements. Acquisition documents should specify the following:

a. Title, number, and date of this specification.

b. Title, number, and date of the applicable tube specification sheet, and the type designation.

c. Service-life guarantee in lieu of life test when applicable (see 3.4.8 and 4.4).

6.3 Qualification. With respect to products requiring qualification, awards will be made only for products which are at the time set for opening of bids, qualified for inclusion in the applicable qualified products list whether or not such products have actually been so listed by that date.

6.3.1 First article. When a first article inspection is required, the item will be tested and should be representative of the product to be produced for delivery on the contract or purchase order. The contracting officer should include specific instructions in the contract regarding quantity of tubes, reporting and approval for first article testing. See appendix F for the first article procedure.

6.4 Subject term (key word) listing.

Classification
Tube specification sheet (TSS)
Serialization
Radioactive marking

6.5 Changes from previous issue. Marginal notations are not used in this revision to identify changes with respect to the previous issue due to the extensiveness of the changes.

Source: https://assist.dla.mil -- Downloaded: 2016-11-03T17:33Z
Check the source to verify that this is the current version before use.

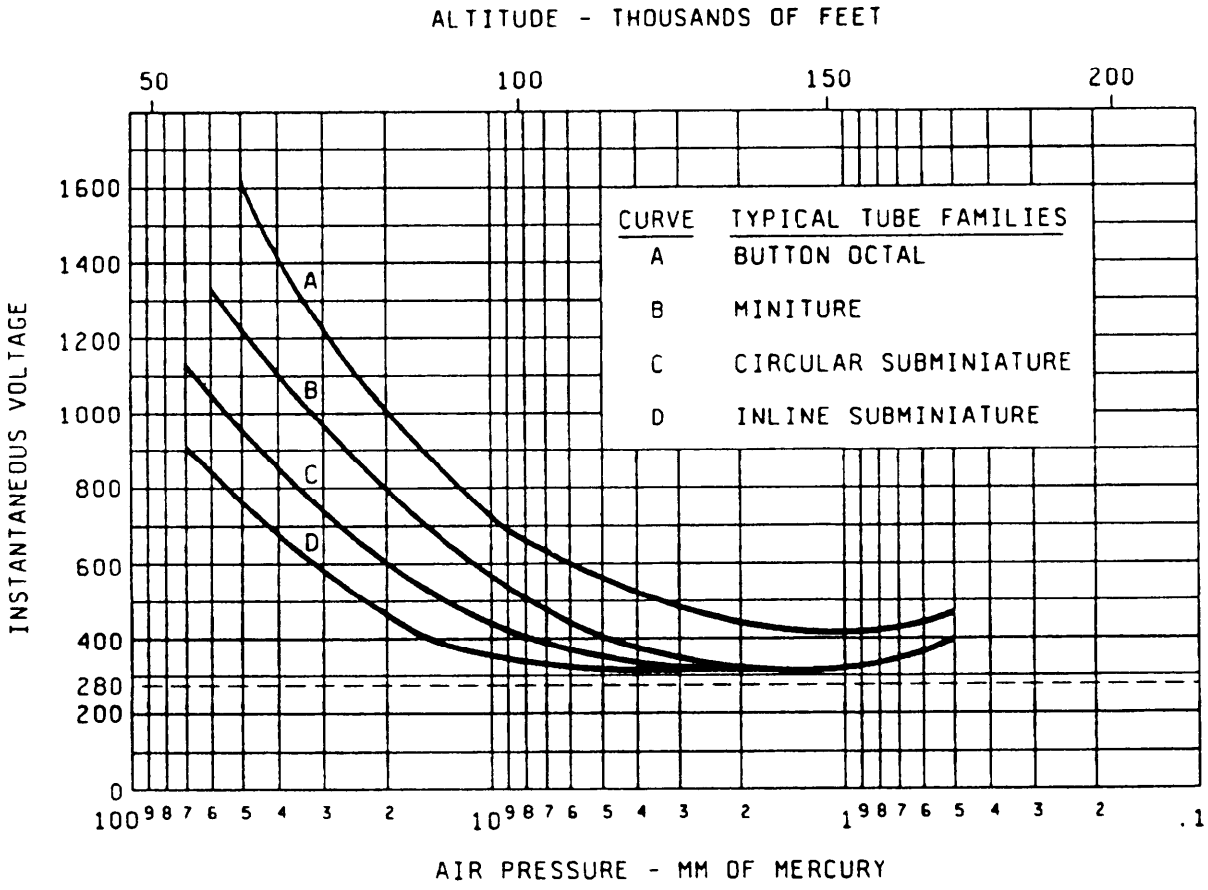

FIGURE 1. Reduced pressure (altitude) voltage breakdown characteristics.

Source: https://assist.dla.mil -- Downloaded: 2016-11-03T17:33Z
Check the source to verify that this is the current version before use.

APPENDIX A

DEFINITIONS OF TERMS

A.1 SCOPE

A.1.1 Scope. The terms and definitions used in this specification are in accordance with American National Standards Institute C60.9 and MIL-STD-109. This appendix contains supplementary terms used in this specification and MIL-STD-1311, with definitions listed alphabetically in A.3. This appendix is a mandatory part of this specification. The information contained herein is intended for compliance.

A.2 APPLICABLE DOCUMENTS

A.2.1 General. The documents listed in this section are specified in section A.3 of this appendix. This section does not include documents cited in other sections of this appendix or recommended for additional information or as examples. While every effort has been made to ensure the completeness of this list, document users are cautioned that they must meet all specified requirements documents cited in section A.3 of this appendix, whether or not they are listed.

A.2.2 Government documents.

A.2.2.1 Standards. The following standards form a part of this document to the extent specified herein. Unless otherwise specified, the issues of these documents are those listed in the issue of the Department of Defense Index of Specifications and Standards (DODISS) and supplement thereto, cited in the solicitation.

STANDARD

MILITARY

MIL-STD-109 - Inspection Terms and Definitions.

(Unless otherwise indicated, copies of above specifications, and standards are available from the Standardization Document Order Desk, 700 Robbins Avenue, Building 4D, Philadelphia, PA 19111-5094.)

A.2.3 Non-Government publications. The following document(s) form a part of this document to the extent specified herein. Unless otherwise specified, the issues of the documents which are DoD adopted are those listed in the issue of the DODISS cited in the solicitation. Unless otherwise specified, the issues of documents not listed in the DODISS are the issues of the documents cited in the solicitation.

ELECTRONIC INDUSTRIES ASSOCIATION (EIA)

RS-209 - Electron Devices.

(Application for copies should be addressed to the Electronic Industries Association (EIA), 2001 Pennsylvania Avenue, NW, Washington, DC 20006.)

AMERICAN NATIONAL STANDARDS INSTITUTE (ANSI)

ANSI/IEEE161-1971 - Terms for Electron Tubes.

(Application for copies should be addressed to the American National Standards Institute (ANSI), 11 West 42nd Street, New York, NY 10036.)

(Non-Government standards and other publications are normally available from the organizations that prepare or distribute the documents. These documents also may be available in or through libraries or other informational services.)

A.2.4 Order of precedence. In the event of a conflict between the text of this document and the references cited herein, the text of this document takes precedence. Nothing in this document, however, supersedes applicable laws and regulations unless a specific exemption has been obtained.

Source: https://assist.dla.mil -- Downloaded: 2016-11-03T17:33Z
Check the source to verify that this is the current version before use.

APPENDIX A

A.3 TERMINOLOGY

Acceleration. A vector quantity that specifies the time rate of change of velocity. Acceleration is measured from zero to peak and expressed in multiples of G.

Acceptance failure rate. The maximum failure rate that, for purposes of sampling of electron tubes, may be considered satisfactory as a process average. (Analogous to sampling plans in acceptance level).

Amplification factor (Mu) (μ). For vacuum tubes, the ratio of a small change in anode voltage to the corresponding change in grid voltage required to produce the same change in anode current (all other electrode voltages and currents being held constant).

Low μ	Less than 10.
Medium μ	10 to less than 50.
High μ	50 and above.

Applied potential. The applied potential on an electrode is the potential between the electrode and the reference point.

Anode delay time (tad). A time interval between the point on the rising portion of the grid pulse which is 25 percent of the maximum unloaded pulse amplitude and the point where anode conduction takes place.

Bogey value. The bogey value is a design value or objective. For asymmetrically distributed characteristics the bogey value is not the center value of the limits; it is a manufacturing objective about which the actual values will be distributed.

Control defect. A control defect is one which constitutes deviation from good workmanship or applicable specification, but which has no effect on the functioning, assembly, maintenance, and life of the unit in service.

Decade. The interval between any two frequencies having a ratio of 10:1.

Discontinuity. A discontinuity is a lack of continuity in any circuit.

Displacement. A vector quantity that specified the change of position of a body or particle. In this specification displacement is expressed as the total excursion measured in millimeters or in inches; for example, .080 inch .080 mm.

G. The acceleration produced by the force of gravity, which varies with the latitude and elevation of the point of observation. By international agreement the value 980.665 cm per sec^2 = 386.087 inches per sec^2 = 32.1739 feet per sec^2 has been chosen as the standard acceleration due to gravity.

Generic specification sheet. A generic specification sheet is a TSS indicating requirements and tests for two or more tubes types which, except for limited variations in physical electrical characteristics that can be uniquely specified on a single TSS, are identical in design, manufacture, and application. Examples include cathode-ray tubes with different phosphors, receiving tubes with different filament or heater voltages, and klystrons with different operating frequencies.

Source: https://assist.dla.mil -- Downloaded: 2016-11-03T17:33Z
Check the source to verify that this is the current version before use.

APPENDIX A

Ignitor. An insulated electrode (often called a "keep-alive" or "primer") designed to maintain a dc glow discharge in a gas-switching tube.

Inoperatives. Inoperatives are shorts, discontinuities, and air leaks. (Methods 1201 and 1267).

Limits. The term "within the limits specified" includes the limit values shown on the tube specification sheet.

Lot. A manufacturing or inspection lot shall be defined as a group of fully processed tubes of one type which are manufactured under essentially the same conditions with respect to material, construction, and processing during a maximum period of 14 consecutive calendar days. If the production rate is 2,000 tubes or less for this period, the production of up to two calendar or fiscal months may be combined to make up one lot of 8,000 tubes or less. If the production rate for a three month period is 500 tubes or less, 500 tubes or less may be accumulated from production extending over a maximum period of three months to form a single lot.

Major cross section. The major cross section of a tube is the first of the following which is applicable:

a. As defined on the tube specification sheet.

b. The plane of the deflecting electrode farthest from the base of electrostatic cathode-ray tubes.

c. The plane of the heater pins of metal tubes or shielded glass tubes and symmetrically constructed tubes.

d. The plane of the number one grid side rods.

e. Any plane through the axis of the tube of perfectly symmetrically constructed tubes.

Microwave tubes. Tubes utilizing principles of operation that are normally employed at frequencies above one gigahertz, or tubes using distributed rather than lumped circuit elements.

Miniature tubes. Tubes with shape and dimensions designated in EIA Standard RS-209-A as T5-1/2 and T6-1/2 (round) envelope configuration and rigid pins.

Octave. The interval between any two frequencies having a ratio of 2:1.

Peak forward anode voltage. The peak forward anode voltage is the maximum voltage applied to the anode with respect to the cathode in the forward direction.

Peak inverse anode voltage. The peak inverse anode voltage is the maximum voltage applied to the anode with respect to the cathode in the inverse direction.

Permanent short. A permanent short is a short circuit which exists for an appreciable time when there is no accelerating force applied to the tube. This class includes sustained short circuits which may be cleared by subsequent acceleration.

Polarity. All potentials are designated by polarity with respect to the reference point.

Power or transmitting tubes. Tubes so designated by the TSS. These are negative grid tubes normally operated as oscillators, amplifiers, or driver with an anode dissipation generally of 50 watts (formerly this was 25 watts) or more per tube. These also include rectifiers with rectified power output generally of 250 watts or more.

Source: https://assist.dla.mil -- Downloaded: 2016-11-03T17:33Z
Check the source to verify that this is the current version before use.

APPENDIX A

Pulse. A pulse is a recurrent momentary flow of energy of short time duration.

Pulse duration. The time interval between the points on the trace envelope at which the instantaneous amplitudes are equal to 70 percent of the maximum amplitude, excluding spike. For magnetrons, see method 4304.

Pulse modulator and pulse diode terminology. (See MIL-STD-1311, section 4.)

Receiving tubes. Tubes so designated by the TSS. These are negative grid tubes normally operated as oscillators, amplifiers, mixers, or converters with an anode dissipation of under 50 watts (formerly this was 25 watts). These also include diodes or rectifiers with rectified power output under 250 watts.

Reference point. The reference point for the electrode potential is: The cathode terminal, if present; the negative terminal of a filament operated on direct current; or, the electrical center of the filament circuit operated on alternating current. When tests are to be made with cathode-resistor bias, the reference point for all potentials, except heater-cathode and suppressor-grid, shall be the negative terminal of the cathode resistor. The reference point for heater-cathode and suppressor-grid potentials shall be the positive terminal of the cathode resistor.

Reject failure rate. A failure rate for an individual lot that is considered to be the boundary or limit between the individual lot quality that might be tolerated occasionally (usually at a small probability of .10) and the individual lot quality that should not be accepted. (Analogous to LTPD in acceptance sampling.)

Residual signal (lag). Signal remaining at some specified time after exposure to light under certain specified conditions.

Resonance. Resonance of a system in forced oscillation exists when any change, however small, in frequency of excitation causes a decrease in the response of the system.

Response (of a radiation counter tube). The response of a radiation counter tube is the response when operated under specified circuit conditions and in a standard radiation field.

Ruggedized tubes. Ruggedized tubes are those which do not meet the criteria for classification as reliable tubes but which have more stringent shock and vibration requirements specified on the TSS than other military types. (The term is obsolete and was usually limited to certain low-power vacuum tubes.)

Simple harmonic motion. A motion such that the displacement is a sinusoidal function of time.

Spike. A spike is a transient of very short duration, during which the amplitude appreciably exceeds the average amplitude of the pulse.

Starting voltage (of a radiation counter tube). The starting voltage of a radiation counter tube is the voltage at which uniform pulses with specified average amplitude appear across a specified resistor and in a specified radiation field.

Subminiature tubes. Tubes with shape and dimensions designated in EIA Standard RS-209 as T2x3 (oval) and T3 (round) envelope configuration and flexible wire leads.

Supplier. Contractor, manufacturer, or vendor.

Supply potential. The supply potential is the potential furnished to a circuit containing an electron tube.

Source: https://assist.dla.mil -- Downloaded: 2016-11-03T17:33Z
Check the source to verify that this is the current version before use.

Temporary short. A temporary short is a short circuit resulting from and lasting during the application of an accelerating force. When it is necessary to classify temporary shorts as to their degree or the method of testing, the following terms are preferred:

a. A tap short is a temporary short as determined with the relatively low accelerating force as in the tap short test specified in method 1201.

b. A transient short is a temporary short of relatively short duration occurring during a high-level shock impact such as that specified in method 1041.

Time constant of rise. The time duration of a pulse to rise from 25 percent of the maximum pulse amplitude to 70 percent of the maximum pulse excluding spike, in microseconds.

Time of fall. The time duration of pulse to fall from 70 percent of the maximum pulse amplitude to 25 percent of the maximum pulse amplitude excluding spike, in microseconds.

Tube specification sheet (TSS). The document which defines the physical, electrical, and mechanical requirements of the tube and the tests necessary to verify them.

Useful power output. The power delivered to the load.

Velocity. A vector quantity that specifies the time rate of change of displacement with respect to a reference frame.

X axis (formerly X1 axis). The axis of application of shock and vibration normal to both the Z axis and the major cross section of the tube elements.

Y axis (formerly X2 axis). The axis of application of shock and vibration normal to both the X and Z axes.

Z axis (formerly Y1 and Y2 axes). The axis of application of shock and vibration which is parallel to the major axis of the tube. Unless otherwise specified on the TSS, the major axis shall be considered as:

a. The long axis of the cathode structure; or

b. The path of the undeflected beam in tubes employing electron beams.

Source: https://assist.dla.mil -- Downloaded: 2016-11-03T17:33Z
Check the source to verify that this is the current version before use.

APPENDIX B

ABBREVIATION AND SYMBOLS

B.1 SCOPE

B.1.1 Scope. This appendix contains abbreviations and symbols used in this specification and MIL-STD-1311. This appendix is a mandatory part of this specification. The information contained herein is intended for compliance.

B.1.2 Purpose. The purpose of this appendix is to establish a list of authorized abbreviations and symbols for electron tubes to be used on drawings, military specifications, and military handbooks.

B.2 APPLICABLE DOCUMENTS. This section is not applicable to this document.

B.3 ABBREVIATIONS AND SYMBOLS

Å	Angstrom unit (.1 nanometer).
A	Amperes (may be either ac rms or dc).
a	Amperes (peak value) or anode.
a	Anode.
/a	Per anode.
Aac	ac amperes (rms).
α (alpha)	Attenuation constant.
ac	Alternating current.
Adc	dc amperes.
AFR	Acceptable failure rate.
ALD	Acceptance limit for sample dispersions.
ATR tube	Anti-transmit-receive tube.
ΔB	Luminance change between two conditions.
b = B/Yo	Normalized susceptance.
β (beta)	Phase constant.
B_x	Luminance level, specified or measured. Additional lower case and numerical subscripts are also used.
B_D	Peak luminance level of written noise (ft_L).
be	Back electrode.
B_f	Dynamic equilibrium luminance.
B_s	Saturation luminance.

Source: https://assist.dla.mil -- Downloaded: 2016-11-03T17:33Z
Check the source to verify that this is the current version before use.

APPENDIX B

B_{sw}	Static writing response.
c	Velocity of light.
C	Capacitance.
°C	Degrees Celsius.
cb	Centibels.
ce	Collector electrode.
Cgk, Cgp, Cpk, etc.	Tube capacitance between the electrodes indicated.
CI	Conversion index.
Cin	Input capacitance.
Ck	Capacitor between cathode and ground.
cl	Collimator electrode.
Cl	Load capacitance.
cm	Centimeter.
Cmx	Center magnification.
Cout	Output capacitance.
cps	Cycles per second (for revisions and new TSS's, use hertz (Hz)).
CRO	Cathode-ray oscilloscope.
CRT	Cathode-ray tube.
ct	Center tap.
CW	Continuous wave.
Δ (delta)	A change in the value of the indicated variable. When expressed in percent the difference in readings is divided by the initial reading and multiplied by 100.
D	The active reading scan-line duration in microseconds.
Db	Decibels.
D1, 2, 3, 4	Deflection plates.
dc	Direct current.
DF	Deflection factor in volts per inch.

Source: https://assist.dla.mil -- Downloaded: 2016-11-03T17:33Z
Check the source to verify that this is the current version before use.

$\frac{dik}{dt}$	Rate of rise of cathode current pulse.
Disj	Peak dark current.
DIsj	Dark current.
Dp	Pulse droop.
Du	The product of time of pulse and pulse repetition rate (duty cycle).
D_w	Dynamic writing and erasing response.
DD_w	Dynamic decay write and erase.
DVST	Direct view storage tube.
dy	Dynode.
e	Peak voltage.
EB	Ballistic deflection.
Eb, Eb1, 2, 3	dc voltage on respective anodes or collectors. In the case of multiplex tubes containing more than one operating unit, the number of the unit concerned is inserted between the voltage symbol and the element symbol. For example, E2b, E1b, E1c2, etc. The number of the unit is the number of the anode in that unit.
eb	Peak dc anode (collector) voltage.
Eb'	"Off" anode voltage.
Ebb	dc anode supply voltage.
Ebb'	"Off" anode supply voltage.
Eb/Ib	Adjust anode voltage to produce the specified anode current.
ebe	Peak voltage on backing electrode.
Ebe	dc voltage on backing electrode.
Ec, Ec1, 2, 3	dc voltage on respective grids.
Ecal	Calibration voltage.
Ecc, Ecc1, 2, 3	dc supply voltage to respective grids.
Ecco	Cut-off voltage at supply.
Ec/Ib	Adjust grid voltage for the specified anode current.

Source: https://assist.dla.mil -- Downloaded: 2016-11-03T17:33Z
Check the source to verify that this is the current version before use.

APPENDIX B

Ece	dc voltage on collector electrode.
Eco	dc cutoff grid voltage.
ed	Voltage peak between anode No. 2 and any deflection plate in cathode-ray tubes.
Edy	dc voltage of anode producing secondary emission.
Ee	End-of-plateau voltage.
Ef	Filament or heater voltage.
Ef/Po	Adjust filament potential (with other potentials held constant) to reduce the power output obtained on oscillation by the amount specified.
Eg1, 2, 3	rms value of ac component of input voltage for respective grids.
egk	Peak voltage drop between grid and cathode.
egy	Peak forward grid voltage.
egx	Peak inverse grid voltage.
Ehk	Heater-cathode voltage (sign to indicate polarity of heater with respect to cathode).
Eid	Ignitor voltage drop.
Eip	dc ion pump voltage.
ek	Peak voltage on cathode.
Ek	dc voltage on cathode.
Ekk	Cathode pre-bias voltage.
Eo	dc component of output voltage of rectifiers.
EO	Over-voltage for radiation counter tubes.
eo	Pulse amplitude.
Ep	rms value of the ac component of anode voltage with respect to cathode.
Epp	ac anode supply voltage.
epx	Peak inverse anode voltage.
epy	Peak forward anode voltage.
Er	Reflector voltage.

Source: https://assist.dla.mil -- Downloaded: 2016-11-03T17:33Z
Check the source to verify that this is the current version before use.

Eres	Reservoir voltage.
Ers	Resonator voltage.
Es	dc emission voltage.
Es	Starting voltage for radiation counter tubes.
Esd	External shield voltage.
Esg	Shield grid voltage.
Esh	Shell voltage.
Esh	Screen voltage.
Esig	Applied signal voltage.
Esj	Target voltage.
Esol	dc solenoid voltage.
Esp	Spade voltage.
Ess	dc voltage on storage surface.
Eta	Target voltage.
Etd	Average voltage drop between anode and cathode.
etd	Peak voltage drop between anode and cathode.
Evs	dc voltage on viewing screen.
Ew	dc helix voltage.
ew	Peak helix voltage.
Ez	Ionization, breakdown, or striking voltage.
f	Filament.
f	Flood-gun.
f_1	The read scan-line repetition rate (Hz).
f_2	$= \frac{RJ}{D}$ (MHz)
F	Farad.
F	Frequency (in Hz). 1/

1/ For revisions and new TSS's, use hertz (Hz), kilohertz (kHz), megahertz (MHz), or gigahertz (GHz).

Source: https://assist.dla.mil -- Downloaded: 2016-11-03T17:33Z
Check the source to verify that this is the current version before use.

FA	Maximum frequency above which receiving tube performance deteriorates seriously and sharply.
fct	Filament center tap.
FI	Faceplate illumination.
fk	Filament-cathode return.
Fsg	Frequency of signal generator.
ftL	Foot lamberts.
g = G/Yo	Normalized conductance.
G	Acceleration of gravity.
G	Giga (10^9).
G	Gain.
G1s	Large-signal gain.
Gss	Small-signal gain.
γ (gamma)	Propagation constant.
g, g1, 2, 3	Grid (number to identify grids, starting from cathode).
1g2, 2g2, etc.	Identifies the second grid of units 1 and 2.
3g1, 3g2, etc.	Identifies the first and second grids of unit 3.
g2 +4	Grids having common pin connection.
GA	Gas amplification.
Gc	Gigacycles (kilomegacycles) (for revisions or new TSS's, use gigahertz (GHz)).
Gr	Gas ratio.
GHz	Gigahertz.
h	Heater.
H	Field strength, in gauss.
H	Henry.
h	The written raster height as a fraction of the storage surface reference dimension (SSRD).
hct	Heater center tap.
ht	Heater tap.

Source: https://assist.dla.mil -- Downloaded: 2016-11-03T17:33Z
Check the source to verify that this is the current version before use.

APPENDIX B

Hz	Hertz.
i	Peak current.
I	Screen brightness.
I (focus coil)	Focus coil current.
Ia	Anode current.
I_{av}	The average output signal current.
Ib, Ib1, 2, 3	dc current of respective anodes or collectors.
ib	Peak value of dc anode or collector current. When used in reference to pulses, the maximum peak current excluding spike.
$I_{bkg_{max}}$	Maximum black signal current.
$I_{bkg_{min}}$	Minimum black signal current.
Ibo	Idling anode current with no rf drive applied.
Ic, Ic1, 2, 3	dc current of respective grid.
ic	Peak grid current.
iD	Peak dark current.
ID	Dark current.
Idy	Current of anode producing secondary emission.
If	Filament or heater current.
if	Intermediate frequency.
Ig	rms value of ac component of grid current.
Ihk	Heater-cathode leakage current.
Ii	Ignitor current.
Ik	dc cathode current.
ik	Peak cathode current.
Δik	Change in peak cathode current.
iL	Peak load current.
ILK	Dark current.
int con	Internal connection.

Source: https://assist.dla.mil -- Downloaded: 2016-11-03T17:33Z
Check the source to verify that this is the current version before use.

Io	dc component of output current of rectifiers per tube.
Ip	rms value of ac component of anode current.
ir	ion repeller.
Ir	Reflector current.
Ires	Reservoir current.
Irs	Resonant current.
Is	dc emission current.
is	Peak emission current.
$I_{S(0)}$	The output signal amplitude at the beginning of the read time interval.
Isg	dc component of primary emission from grid indicated.
isig	Peak signal current.
Isig	Signal-output current.
isj	Peak signal current.
Isj	Signal-output current.
isjT	Peak target current.
IsjT	Target current (sum of Isj and DIsj or sum of Isig plus ID).
Iso	Isolation (in dB).
Isol	dc solenoid current.
Isp	DC spade current.
Ita	dc target current.
Iw	dc helix current.
iw	Peak helix current.
I_{wmax}	Maximum white signal current.
I_{wmin}	Minimum white signal current.
Iz	Ionization current.
J	The read scan-line length as a fraction of the SSRD.
°K	Degress Kelvin.
k	Cathode.

Source: https://assist.dla.mil -- Downloaded: 2016-11-03T17:33Z
Check the source to verify that this is the current version before use.

APPENDIX B

kc	Kilocycles (for revisions or new TSS's use kilohertz (kHz)).
kMc	Kilomegacycles (for revisions or new TSS's use gigahertz (GHz)).
kTB	Theoretical resistance noise power.
kv	Peak kilovolts.
kVa	Kilovolt amperes.
kva	Peak kilovolt amperes.
kV ac	ac kilovolts (rms).
kV dc	dc kilovolts.
kW	Kilowatts.
kHz	Kilohertz.
kw	Peak kilowatts.
L	Lamberts.
La	Arc loss.
Lag	Percentage of initial value of signal-output current remaining after a specified time period following removal of illumination.
LAL	Lower acceptance limit for sample average or sample median.
λ (lambda)	Wavelength.
λo	Resonant wavelength.
Lc	Conversion loss or gain (ratio of available signal power to the available intermediate frequency power).
Ld	Duplexer loss.
LIb	Leakage current.
Li	Insertion loss.
lm	Lumens.
L_{pp}	The formula, 20 log L_{pp} (dB), is the dynamic range, peak-to-peak disturbance level.
L_{rms}	The formula, 20 log L_{rms} (dB), is the dynamic range, rms disturbance level.

Source: https://assist.dla.mil -- Downloaded: 2016-11-03T17:33Z
Check the source to verify that this is the current version before use.

APPENDIX B

LSI	Standardized light source supplied by a coiled tungsten lamp with a lead or lime glass enveloped operated at a color temperature of 2,856°K.
m	Meter, or one-thousandth.
mm	Millimeter.
mA	ac (rms) or dc milliamperes.
ma	Peak milliamperes.
mA ac	ac milliamperes (rms).
mA dc	dc milliamperes.
Mc	Megacycles (for revision or new TSS's use megahertz (MHz)).
Meg	Megohms.
mftL	Millifoot lamberts.
mH	Millihenry.
MHz	Megahertz.
mL	Millilamberts.
MP	Missing rf pulses in percent.
mr	Milliroentgen.
MRSD	Maximum rated standard deviation.
ms	Milliseconds.
msi	Milligrams per square inch (plating).
MTF	Modulation transfer function.
Mu or u (μ)	Amplification factor.
mv	Peak millivolts.
mV ac	ac millivolts (rms).
mV dc	dc millivolts.
MW	Megawatts.
Mw	Peak megawatts.
mW	Milliwatts.
n	nano (10^{-9}).

Source: https://assist.dla.mil -- Downloaded: 2016-11-03T17:33Z
Check the source to verify that this is the current version before use.

APPENDIX B

N	Counts for radiation counter tubes.
N	Number of scan-lines written.
nc	No connection.
NF	Noise figure.
Npm	Counts per minute.
Nps	Counts per second.
Nr	Output noise ratio (ratio of noise power output to resistance noise power).
Os	Pulse overshoot.
p	pico (10^{-12}).
p	Plate (for revisions or new TSS's use anode).
p	Spatial frequency in terms of cycles/SSRD for which the modulation is determined.
/p	Per plate (per anode).
P/ta	Individual target power dissipation.
Pb	Anode breakdown factor or anode heating factor (epy x prr x ib).
Pd	Average drive power.
pd	Peak drive power.
pF	Picofarad.
PFN	Pulse forming network.
Pg1, 2, 3	Power dissipation of respective grid.
Pi	Power input (anode).
Pi (rf)	Average input rf power.
pi	Peak power input.
pi (rf)	Peak input rf power.
Pj	Reactive power in watts.
Pl	Plateau length.
Pn	Noise output.
P'o	Intrinsic P.

Source: https://assist.dla.mil -- Downloaded: 2016-11-03T17:33Z
Check the source to verify that this is the current version before use.

Po	Average power output.
P_{Du}	Peak power output.
$\Delta P_{Ef, etc.}$	Change in Po, etc., of an individual tube caused by the specified change in Ef.
$\Delta P_{t, etc.}$	Change in Po, etc., caused by a test (life, shock, fatigue, etc.).
po	Peak power output.
Pp	Plate or anode power dissipation.
Pp	Power dissipation, collector (TWT).
pps	Pulses per second.
Pre-TR tube	Pre-transmit-receive tube.
prf	Erase pulse repetition frequency.
prr	Pulse recurrence rate or repetition rate in pulses per second.
Ps	Relative plateau slope.
Q	Figure of merit.
QA	Qualification approval.
QCI	Quality conformance inspection.
QL	Loaded Q.
Qo	Intrinsic Q or quality of a circuit without external loading.
QPL	Qualified products list.
r	Reflector.
r	Roentgen.
R	Resistance.
R	The anticipated limiting resolution of the tube in written raster scan-line(s)/SSRD.
Rb	dc resistance of external anode circuit (bypassed).
Rc	dc resistance of external grid circuit (bypassed).

Source: https://assist.dla.mil -- Downloaded: 2016-11-03T17:33Z
Check the source to verify that this is the current version before use.

APPENDIX B

Rc	Reference resistor for noise-ratio measurements (for crystal rectifiers).
rf	Radio frequency.
Rf	Resistance in series with filament or heater.
RFR	Reject failure rate.
Rg	Resistance in series with grid.
rg	Dynamic internal grid resistance.
Ri	Cathode interface resistance.
Rk	Resistance in series with cathode.
Rka1, Rka2, Rkrs, Rfrs, etc.	Tube resistance between the electrodes indicated.
Rl	Load resistance.
rms	Root mean square.
Rp	Resistance in series with plate or anode.
rp	Dynamic internal anode resistance of tube.
rrv	Rate of rise of voltage pulse.
rpc	Roundness of current pulse.
rs	Resonator.
Rsp	Resistance in series with spade.
$R_{SW(V S)}$	The static writing response.
Rta	Resistance in series with target.
Rv	Video impedance.
S	Static sensitivity (phototubes).
S	Scanning speed in inches per second.
s	Dynamic sensitivity (phototubes).
Sc	Conversion transconductance.
Sd	Spectral distribution.
sd	Shield.
se	Starter electrode.
SE	Luminance uniformity factor under static erasing conditions.

Source: https://assist.dla.mil -- Downloaded: 2016-11-03T17:33Z
Check the source to verify that this is the current version before use.

APPENDIX B

sh	Shell.
σ (sigma)	"Input" standing wave ratio in voltage.
σ' (sigma prime)	"Output" standing wave ratio in voltage.
Sm	Transconductance (control grid anode).
Smg1, g2, etc.	Transconductance between the elements indicated.
ΔSm Ef, etc.	Change in Sm, etc., of an individual tube caused by by the specified change in Ef.
ΔSm t, etc.	Change in Sm, etc., caused by a test (life, shock, fatigue, etc.).
sp	Spade.
spo	Spurious power output.
Sr	Sensitivity ratio (maximum Ib to minimum Ib).
ss	Storage surface.
SSB	Single sideband.
S_u	Output signal uniformity factor.
SW	Luminance uniformity factor under static writing conditions.
SSRD	Storage surface reference dimension.
T	Temperature (degrees Celsius (centigrade)).
t	Test duration (seconds, unless otherwise specified).
Δt	A time interval in suitable units.
T_1, T_2	Specific measured time periods.
TA	Ambient temperature.
ta	Target.
tad	Anode delay time (see method 3256).
Δtad	Anode delay time drift (see method 3256).
T_0	Reading time, usable.
TE	Envelope temperature.
TF	Flange temperature measured at point shown on outline drawings.

Source: https://assist.dla.mil -- Downloaded: 2016-11-03T17:33Z
Check the source to verify that this is the current version before use.

tf	Time of fall.
tfc	Time of fall of current pulse.
tfv	Time of fall of voltage pulse.
tg	Total time the erase train is applied.
TH_0	Temperature of condensed mercury in °C.
TIR	Total indicator reading.
tj	Variation in firing time (time jitter).
tk	Cathode-conditioning time (in seconds) necessary before the application of high voltage. In TR tubes, time delay between application of ignitor voltage and rf power.
tp	Erase pulse width.
tp	Pulse duration (excluding magnetrons).
tpc	Duration of current pulse.
TR tube	Transmit-receive tube.
tr	Time constant of rise (excluding magnetrons).
trc	Time of rise of current pulse in microseconds (for magnetrons).
trf	RF pulse duration.
trv	Time of rise of voltage pulse in microseconds.
tsrv	Time of steepest rise of the voltage pulse.
TSS	Tube specification sheet.
TUT	Tube under test.
	Indicated direction of power input and output of the TUT. (This symbol indicates input at left side, output at right side.)
TWT	Traveling-wave tube.
μ	Amplification factor.
μa	Microamperes, peak value.
μA ac	ac microamperes (rms).
μA dc	dc microamperes.

Source: https://assist.dla.mil -- Downloaded: 2016-11-03T17:33Z
Check the source to verify that this is the current version before use.

APPENDIX B

UAL	Upper acceptance limit for sample average or sample median.
µmhos	Micromhos.
µF	Microfarads.
µH	Microhenries.
µS	Microseconds.
µµf	Micromicrofarads (for revisions or new TSS's, use picofarads, (pF)).
µV ac	ac microvolts (rms).
µV dc	dc microvolts.
µW	Microwatts.
V	Grid drive.
V	Volts (may be either ac, rms, or dc).
v	Volts, peak value.
νp	The frequency equivalent of p in cycles/t.
VA	Volt amperes.
va	Peak volt amperes.
V ac	ac volts (rms).
V dc	dc volts.
v/in.	Volts, peak value, per inch of deflection.
Vj	Voltage jitter.
vs	Viewing screen.
VSWR	Voltage standing wave ratio.
vu	Volume units.
Vx	Extinguishing voltage.
w	Writing gun.
W	Watts.
w	Peak watts.
WRSL	Written raster scan-line(s).
Ws	Spike-leakage energy.

Source: https://assist.dla.mil -- Downloaded: 2016-11-03T17:33Z
Check the source to verify that this is the current version before use.

APPENDIX B

X	X axis (see appendix A).
X+, X-, Y+, etc.	Directional axis designations for use in shock and vibration tests. The plus and minus directions shall be specified on the TSS in accordance with the sketch below.

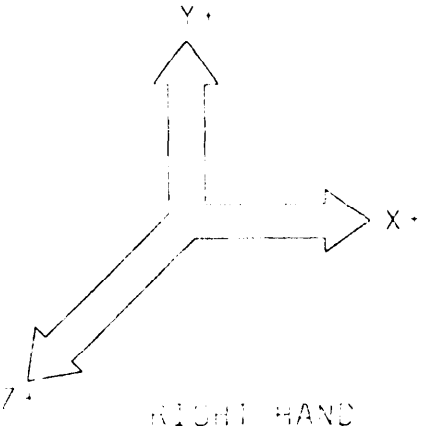

RIGHT HAND
COORDINATE SYSTEM

X1 (obsolete, use X)
X2 (obsolete, use Y)

x	Peak inverse value.
X_1	The assigned abscissa integer values of the line spread function.
Y	Y axis (see appendix A).
Y1 (obsolete, use Z)	
Y2 (obsolete, use Z)	
y	Peak forward.
Y_1	The value of the line spread function at point X_1.
Z	Impedance.
Z	Z axis (see appendix A).
Zd	Impedance to anode of deflection plate circuit at power supply frequency.
Zg	Impedance of the grid circuit.
Zgg	Impedance between grids of push-pull circuit.
Zgk	Impedance between grid and cathode.
Zi	Input impedance.
ZL	Load impedance (with negligible dc resistance).

Source: https://assist.dla.mil -- Downloaded: 2016-11-03T17:33Z
Check the source to verify that this is the current version before use.

APPENDIX B

Zm	Modulator frequency load impedance.	
Zo	Output impedance or characteristic impedance.	
Zp	Impedance in anode circuit.	
Zpp	Impedance between anodes in push-pull circuit.	
1D2	Deflection produced by the deflection plates nearer the screen (for cathode-ray tubes).	
3D4	Deflection produced by the deflection plates nearer the base (for cathode-ray tubes).	
**	Qualification test.	Obsolete
*	Standard-design test.	
#	Special-design test.	
# #	Periodic-check test.	
◂——	Indicates change on TSS.	
▮	Test to be performed at the conclusion of the holding period.	
✕	Directional coupler.	
Ⓐ, Ⓑ, Ⓒ, etc.	Indicates a change to the TSS performed during the first or subsequent revisions.	

Radiation symbol (see 3.4.7).

1. Cross-hatched area shall be magenta or purple.
2. Background shall be yellow.

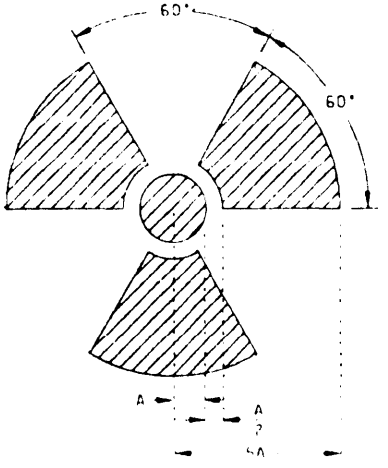

Source: https://assist.dla.mil -- Downloaded: 2016-11-03T17:33Z
Check the source to verify that this is the current version before use.

APPENDIX C

CRITICAL INTERFACE DATA - ELECTRON TUBES AND ACCESSORIES

C.1 SCOPE

C.1.1 Scope. This appendix provides for the standardization of shapes and sizes of electron tubes, their component parts, and accessories in order to ensure mechanical interchangeability (see 3.5). This appendix is a mandatory part of this specification. The information contained herein is intended for compliance.

C.2 APPLICABLE DOCUMENTS

C.2.1 General. The documents listed in this section are specified in section C.3 of this appendix. This section does not include documents cited in other sections of this appendix or recommended for additional information or as examples. While every effort has been made to ensure the completeness of this list, document users are cautioned that they must meet all specified requirements documents cited in section C.3 of this appendix, whether or not they are listed.

C.2.2 Non-Government publications. The following documents form a part of this document to the extent specified herein. Unless otherwise specified, the issues of the documents which are DoD adopted are those listed in the issue of the DODISS cited in the solicitation. Unless otherwise specified, the issues of documents not listed in the DODISS are the issues of the documents cited in the solicitation.

ELECTRONIC INDUSTRIES ASSOCIATION (EIA)

RS-191 - Measurement of Direct Interelectrode Capacitances for Electron Tubes.

RS-209 - Standards for Electron Tubes.

(Application for copies should be addressed to the Electronic Industries Association (EIA), 2001 Pennsylvania Avenue, NW, Washington, DC 20006.)

(Non-Government standards and other publications are normally available from the organizations that prepare or distribute the documents. These documents also may be available in or through libraries or other informational services.)

C.2.3 Order of precedence. In the event of a conflict between the test of this document and the references cited herein, the text of this document takes precedence. Nothing this document, however, supersedes applicable laws and regulations unless a specific exemption has been obtained.

C.3 TUBE OUTLINE DRAWINGS

C.3.1 Tubes and component parts. Electronic Industries Association (IA) Standard RS-209 shall be used whenever the TSS covers a tube or component part which has an applicable EIA outline drawing indicated.

C.3.1.1 EIA outline drawing number. The EIA outline drawing number shall be indicated; e.g., 5-1 (EIA), on the TSS in all cases where an EIA outline drawing number is assigned. When a particular configuration is not indicated in RS-209, a dimensional drawing shall be included on the TSS.

C.3.1.2 Metric equivalents. The equivalent metric dimensions provided on each drawing are for general information only.

C.3.1.3 Tube outline drawings. Tube specification sheets processed prior to September 1965 may have indicated a MIL-E-1 outline drawing number. For these cases, an outline drawing cross-reference list is shown in table C-1.

Source: https://assist.dla.mil -- Downloaded: 2016-11-03T17:33Z
Check the source to verify that this is the current version before use.

C.3.2 Capacitance shields. Standardized capacitance shields, sockets, and cap connectors for use in measuring direct-interelectrode capacitances shall be as indicated in EIA Standard RS-191.

C.3.3 Magnetron tube components. Unless otherwise specified, pole tips/gaps, and terminal plugs/jacks for magnetron tubes shall be as shown on figures C-1 and C-2, respectively.

TABLE C-I. Cross reference, tube outline drawings.

Former MIL-E-1 tube outline number	Equivalent EIA number	Former MIL-E-1 tube outline number	Equivalent EIA number
1- 4	9-26	4- 8	14- 3
1- 6	12- 5	4- 9	16- 3
1- 7	12- 6	5- 1	8- 5
1- 9	12- 2	5- 2	8- 3
2- 2	14- 1	5- 3	8- 1
2- 3	14- 2	5- 4	8- 4
2- 4	16- 1	5- 5	8- 2
3- 1	9- 1	5- 6	8- 6
3- 4	9- 7	5- 8	10- 1
3- 5	9-17	6- 1	5- 1
3- 6	9-11	6- 2	5- 2
3- 7	9-18	6- 3	9-30
3- 8	9-12	6- 4	9-31
3- 9	9-13	6- 5	5- 3
3-10	9-15	6- 6	6- 1
3-11	9-21	6- 7	6- 2
3-12	9-36	6- 8	6- 3
3-13	9-39	8- 1	3- 1
3-14	9-41	8- 2	3- 2
3-15	9-42	8- 3	3- 8
3-16	9-43	8- 4	3- 3
3-17	9-45	8- 5	3- 4
3-18	9-47	8- 7	3- 6
3-19	9-22	8- 8	2- 1
4- 4	12- 7	8- 9	2- 2
4- 5	12- 8	8-10	2- 5
4- 6	12- 3	8-11	2- 6
4- 7	12- 4	16- 2	16- 2

Source: https://assist.dla.mil -- Downloaded: 2016-11-03T17:33Z
Check the source to verify that this is the current version before use.

APPENDIX C

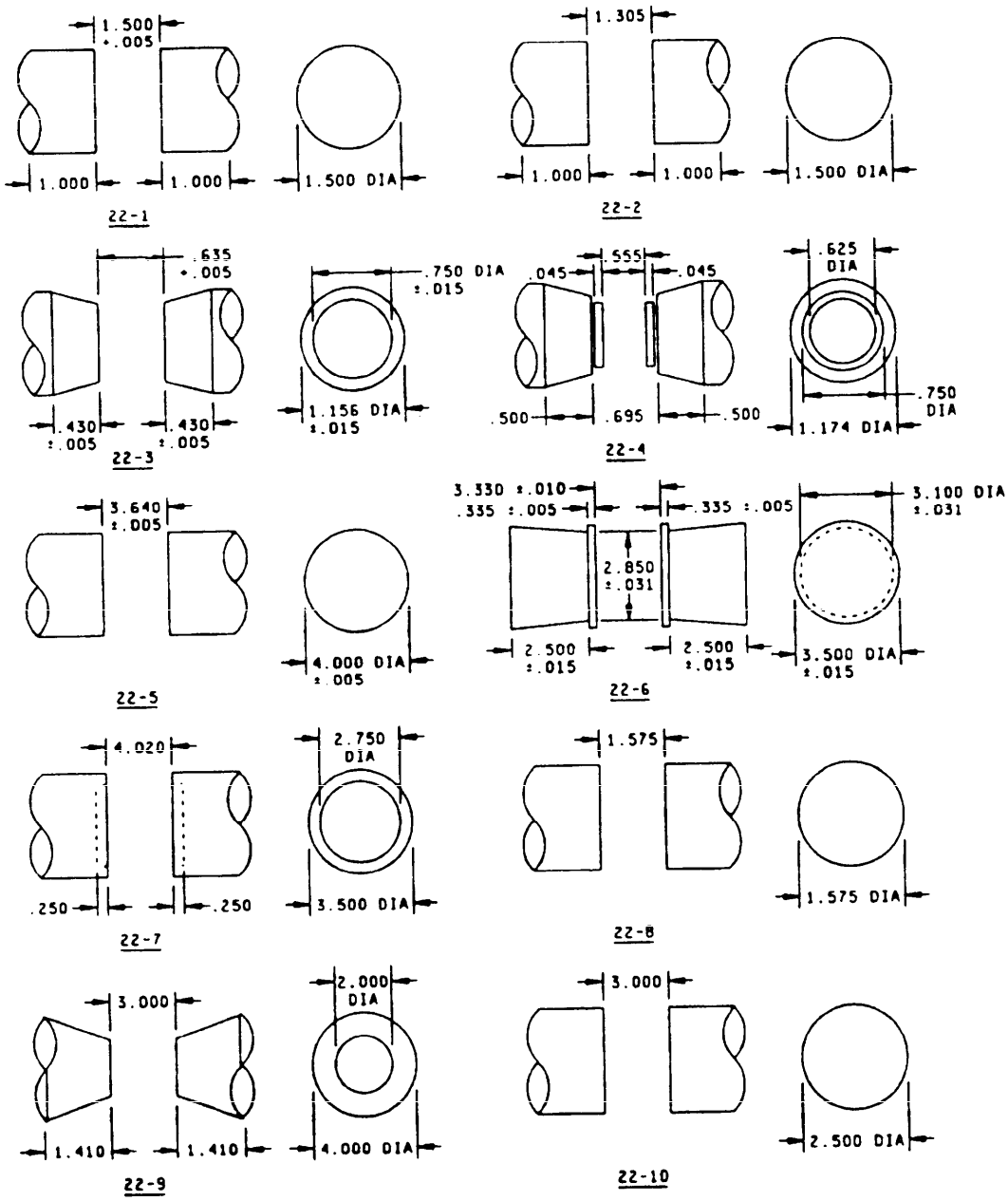

FIGURE C-1. Pole tips and gaps for magnetron tubes.

Source: https://assist.dla.mil -- Downloaded: 2016-11-03T17:33Z
Check the source to verify that this is the current version before use.

Inches	mm	Inches	mm
.005	0.13	1.174	29.82
.010	0.25	1.305	33.15
.015	0.38	1.410	35.81
.031	0.79	1.500	38.10
.045	1.14	1.575	40.01
.250	6.35	2.000	50.80
.335	8.51	2.500	63.50
.430	10.92	2.750	69.85
.500	12.70	2.850	72.39
.555	14.10	3.000	76.20
.625	15.88	3.100	78.74
.635	16.13	3.330	84.58
.695	17.65	3.500	88.90
.750	19.05	3.640	92.46
1.000	25.40	4.000	101.60
1.156	29.36	4.020	102.11

NOTES:
1. Dimensions are in inches.
2. Metric equivalents are given for general information only.
3. Material shall be soft iron, cold rolled steel, or equivalent.
4. Side and end views of pole faces are shown.

FIGURE C-1. Pole tips and gaps for magnetron tubes - Continued.

Source: https://assist.dla.mil -- Downloaded: 2016-11-03T17:33Z
Check the source to verify that this is the current version before use.

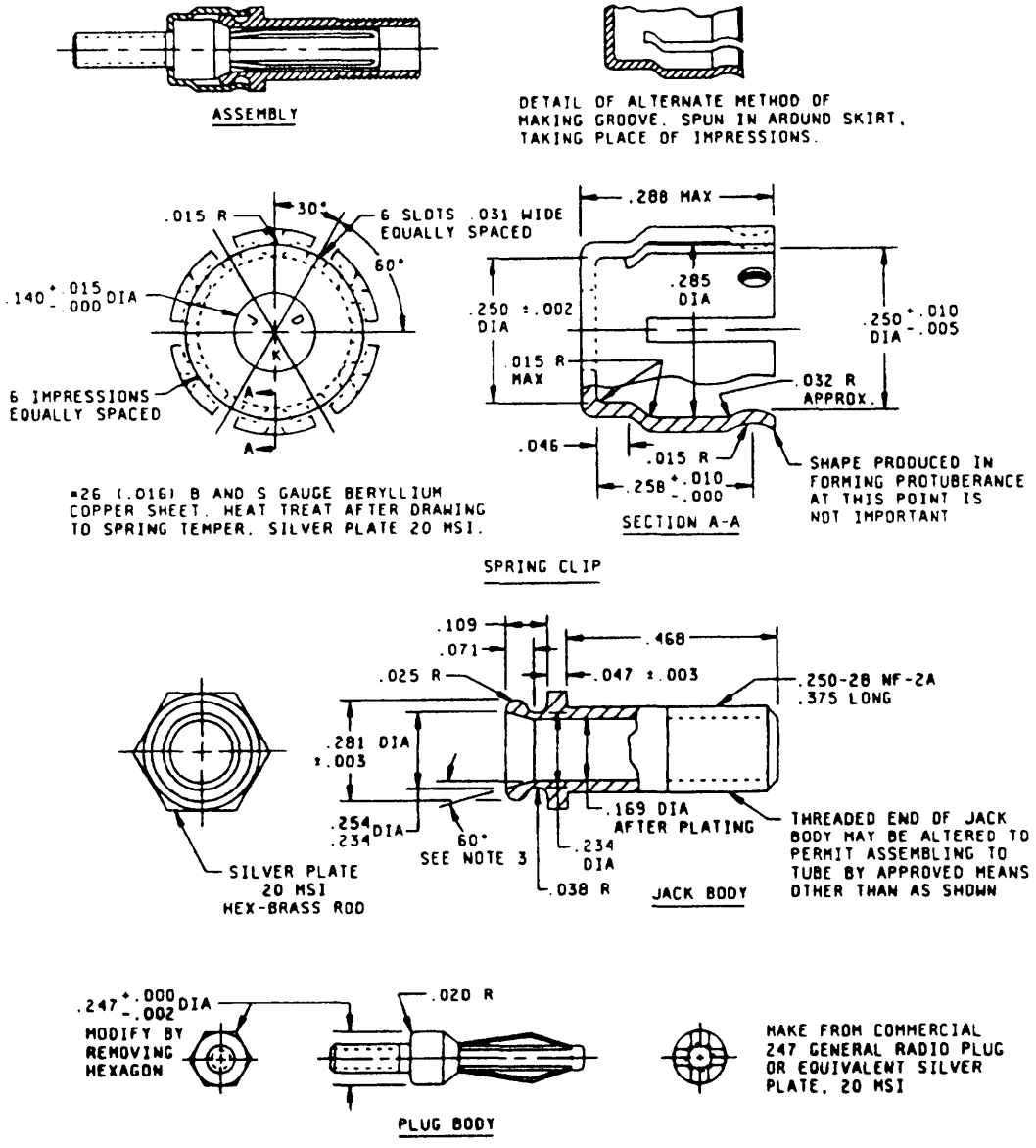

FIGURE C 2. Locking jack and plug for magnetron tubes.

Source: https://assist.dla.mil -- Downloaded: 2016-11-03T17:33Z
Check the source to verify that this is the current version before use.

Inches	mm	Inches	mm
.002	0.05	.109	2.77
.003	0.08	.140	3.56
.005	0.13	.169	4.29
.010	0.25	.234	5.94
.015	0.38	.247	6.27
.016	0.41	.250	6.35
.020	0.51	.254	6.45
.025	0.64	.258	6.55
.031	0.79	.281	7.14
.032	0.81	.285	7.24
.038	0.97	.288	7.32
.046	1.17	.312	7.92
.047	1.19	.375	9.53
.071	1.80	.468	11.89

NOTES:
1. Dimensions are in inches.
2. Metric equivalents are given for general information only.
3. Unless otherwise specified, tolerances are ±.005, ±1/2° on angles.
4. Blend countersink to drilled hole. No sharp corners.

FIGURE C-2. Locking jack and plug for magnetron tubes - Continued.

Source: https://assist.dla.mil -- Downloaded: 2016-11-03T17:33Z
Check the source to verify that this is the current version before use.

APPENDIX D

VISUAL AND MECHANICAL INSPECTION CRITERIA

D.1 SCOPE

D.1.1 Scope. This appendix establishes uniform criteria for evaluation and classifying defects on the individual tubes during visual and mechanical (physical) inspection. The criteria shall apply whether a 100-percent inspection or a sampling plan procedure is used. This appendix is a mandatory part of this specification. The information contained herein is intended for compliance.

D.2 APPLICABLE DOCUMENTS

D.2.1 General. The documents listed in this section are specified in sections D.3 through D.7 of this appendix. This section does not include documents cited in other sections of this appendix or recommended for additional information or as examples. While every effort has been made to ensure the completeness of this list, document users are cautioned that they must meet all specified requirements documents cited in sections D.3 through D.7 of this appendix, whether or not they are listed.

D.2.2 Non-Government publications. The following documents form a part of this document to the extent specified herein. Unless otherwise specified, the issues of the documents which are DoD adopted are those listed in the issue of the DoDISS cited in the solicitation. Unless otherwise specified, the issues of documents not listed in the DoDISS are the issues of the documents cited in the solicitation.

ELECTRONIC INDUSTRIES ASSOCIATION (EIA)

EIA Tube Publication TEP No. 29 - Hard Glass Bulb Criteria and Bulb Outlines (August 1963).

EIA Tube Publication TEP No. 123 - Glossary, Terms Used in the Description of Glass Components and Their Defects (March 1962).

RS-209 - Standards for Electron Tubes.

(Application for copies should be addressed to the Electronic Industries Association (EIA), 2001 Pennsylvania Avenue, NW, Washington, DC 20006.)

(Non-Government standards and other publications are normally available from the organizations that prepare or distribute the documents. These documents also may be available in or through libraries or other information services.)

D.2.3 Order of precedence. In the event of a conflict between the text of this document and the references cited herein, the text of this document takes precedence. Nothing in this document,however, supersedes applicable laws and regulations unless a specific exemption has been obtained.

D.3 GENERAL INSTRUCTIONS

D.3.1 Visual and mechanical. 100 percent of the tubes comprising the lot shall be subjected to visual and mechanical inspection (excluding dimensions) for overall workmanship and all applicable defects specified in this appendix. Refer to Table D-I for defect classification and acceptance numbers. Individual tubes shall not be rejected for control defects. The decision to accept or reject the lot shall be made independently for each defect.

TABLE D-I. Sampling plan for visual and mechanical inspection.

Lot Size	Type defect and acceptance numbers			
	Major 1 (combined)	Major 2 (each)	Minor (combined)	Control (each)
0 - 100	1	1	2	2
101- 200	2	2	4	4
201 and up	3	3	6	6

Source: https://assist.dla.mil -- Downloaded: 2016-11-03T17:33Z
Check the source to verify that this is the current version before use.

D.3.2 Dimensions.

(1) The physical characteristics of tubes shall be inspected for conformance with the specified outline drawing. Quality assurance provisions for standard outlines shall be as specified in table D-II. For tube configurations not listed in table D-II, an outline drawing and inspection provisions shall be included on the TSS. Reference (nominal) dimensions (those without tolerances) are for information only, not for inspection.

TABLE D-II. Standard inspection provisions for EIA outlines.

The following outline drawing prefix (T) number and reference letters refer to EIA Standard RS-209 designations. (See appendix C.)

Outline prefix (T)	Reference letters	Sampling plan category (table III)
2x3, 3, 5-1/2, 6-1/2	A through E	XI
2x3, 3, 5-1/2, 6-1/2	G, H, and note 8 of outline T2x3 and notes 4 and 5 of outline T3(3-6)	XV
8, 9, 10, 11, 12, 14, 15 (based types)	A, C, and D	XV
8, 9, 10, 11, 12, 14, 15, 16 (based types)	L and M	XV
9 and 12 (all glass)	A through E (where shown)	XI

(2) Cathode tube and cathode-ray charge storage tube dimensions with tolerances specified shall be inspected to table III, category XV.

D.3.3 Magnification. Unless otherwise specified (see D.5.1, this appendix), inspection shall be made without magnification.

D.3.4 Criteria. In addition to the general criteria for all tubes specified (see D.4), supplementary criteria for specific applications are located as follows:

Application	Paragraph
General instructions	D.3
General criteria	D.4
Miniature and subminiature receiving tubes .	D.5
Transmitting and power rectifier tubes . . .	D.6
Cathode-ray tubes	D.7

Source: https://assist.dla.mil -- Downloaded: 2016-11-03T17:33Z
Check the source to verify that this is the current version before use.

D.3.5 Glass defects and terminology.

a. Envelopes. Terms used in the description of glass components and of their defects shall be as specified in the EIA Tube Publication Tep No. 123.

b. Screens and faceplates. Cathode-ray and visual output cathode-ray charge storage tube screen and faceplate defects, and terms shall be as indicated in EIA Tube Publication TEP No. 123, supplemented by the following:

(1) Bright spot. A small area of light on the tube screen with an intensity (fluorescent or phosphorescent) at least twice the brightness of the surrounding area. Its color need not be the same as that of the surrounding area. 1/

(2) Chill wrinkle. Fine ripples or waves on the surface of the glass.

(3) Color. In these criteria "color", unless otherwise specified, refers to the color observed with the screen activated. 1/

(4) Color spot. A small area which is noticeably discolored and which has a fluorescent or phosphorescent intensity substantially different from the surrounding area but not within the limits of dead or bright spots. 1/

(5) Combination spots. Spots which appear to have combinations of the characteristics of dead, bright, and color spots, shall be classified as the type they most resemble. 1/

(6) Dead spot. A small area which emits practically no light for example, holes and nonfluorescent or nonphosphorescent spots in the screen, and opaque particles, open blisters, and bruise checks in the faceplate glass. 1/

(7) Face-contour variation. Variation in the inside or outside face surface contour, such as "bull's-eye top" or "suck-up".

(8) Lap. A fold in the surface.

(9) Loading mark. Minute variable indentations on the surface of the glass caused by air.

(10) Shaded or mottled area. Minor gradation in color or luminous intensity with respect to overall screen background, such as may be caused by uneven screen distribution, water marks, mold, or loading marks, and scum or spew. 1/

(11) Surface blemish. Inside or outside surface defect such as spot, chill wrinkle, and cord.

1/ Applies to cathode-ray tubes only.

Source: https://assist.dla.mil -- Downloaded: 2016-11-03T17:33Z
Check the source to verify that this is the current version before use.

D.4 GENERAL CRITERIA. The following criteria shall be applicable unless superseded in other portions of this appendix covering specific families of tubes.

D.4.1 Glass-envelope defect classification.

Soft and hard glasses. Unless otherwise specified herein, the criteria in D.4.1.1 through D.4.1.8 are established for glass codes as specified in EIA Tube Publication TEP No. 29.

D.4.1.1 Stones.

a. Soft glass stones.

(1) Size and number.

Up to .010 inch (.25 mm)	Acceptable.
.011 inch (.28 mm) to .020 inch (.51 mm)	
If in quantity of four or more	Minor.
.021 inch (.53 mm) and more	Minor.

b. Hard glass stones.

(1) Size and number.

Stones less than one-half the allowable dimensions shall not be considered	Minor.
Up to and including .047 inch (1.19 mm)	Acceptable.
Over .047 inch (1.19 mm): Size and number greater than as specified in EIA Tube Publication TEP No. 29 for acceptable stones	Minor.

(2) Overglazing.

Stones more than .031 inch (.79 mm) not overglazed	Minor.

D.4.1.2 Blisters.

a. Soft glass blisters (see figure D-1).

(1) Open blisters:

Open-surface blisters .025 inch (.64 mm) or more	Minor.

(2) Buried or unbroken surface blisters. No attempt shall be made to break unbroken blister.

Total number and class of blisters .025 inch (.64 mm) and more	Minor

Source: https://assist.dla.mil -- Downloaded: 2016-11-03T17:33Z
Check the source to verify that this is the current version before use.

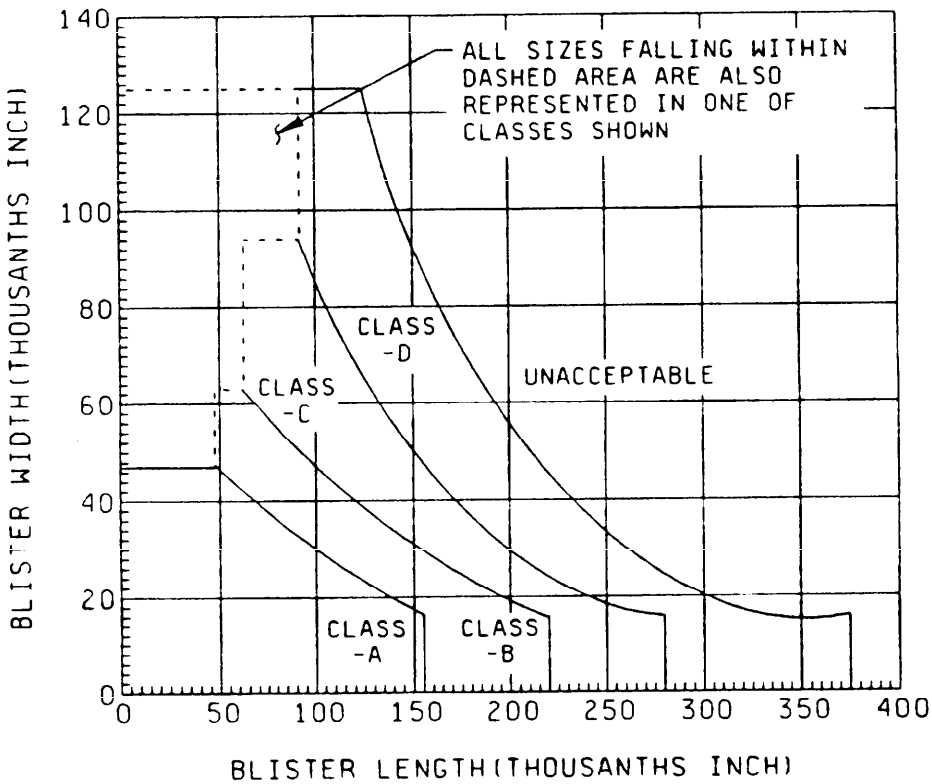

FIGURE D-1. Classification of soft glass unbroken blister sizes.

Source: https://assist.dla.mil -- Downloaded: 2016-11-03T17:33Z
Check the source to verify that this is the current version before use.

b. Hard glass blisters.

(1) Open-surface blisters .031 inch (.79 mm) or more. Accept if raw edges of the open-surface blisters are finished off . . . . . Minor

(2) Buried or unbroken blisters (class A or B, glass). No attempt shall be made to break unbroken blisters . . . . . Minor

Reject if: Four or more blisters with a maximum dimension of more than .188 inch (4.78 mm) occur in any area bounded by a one inch (25.4 mm) circle, or 13 or more blisters with a maximum dimension between .031 inch (.79 mm) and .047 inch (1.19 mm) occur in any area bounded by a one inch (25.4 mm) circle, or size of any blister is greater than as specified in EIA Tube Publication TEP No. 29 for acceptable unbroken blisters.

D.4.1.3 Scratches. Scratches on the envelope that exceed .010 inch (.25 mm) in width and aggregate length of more than 3.00 inches (76.2 mm) . . . . . Minor

D.4.1.4 Glass adhered. Maximum dimension of adhered glass more than .094 inch (2.39 mm) . . . . . Minor

D.4.1.5 Checks and cracks. Crack extending into or through the wall of the glass envelope. This does not include surface checks or cracks due to impact, that are less than .04 inch (1.02 mm) in the largest surface dimension . . . . . Major 1

D.4.1.6 Scale. Acceptable scale on hard glass bulbs in accordance with EIA Tube Publication TEP No. 29 . . . . . Minor

D.4.1.7 Glass knots (hard glass). Maximum dimensions and number of knots greater than as specified in EIA Tube Publication TEP No. 29. Maximum total length of string of knots shall be 6 inches (152.4 mm) in one envelope . . . . . Minor

D.4.1.8 Tip defects.

a. Sharp tips. Sharp, chipped, or stringy . . . . . Minor

b. Re-entrant (sucked-in) exhaust tip. Re-entrant depth more than one-third of tip diameter . . . . . Control

D.4.2 Metal envelope defect classification.

D.4.2.1 Dents.

a. Number. More than two dents in a tube . . . . . Minor

b. Depth. Any dent more than .031 inch (.79 mm) in depth . . . . . Minor

D.4.2.2 Paint finish.

a. Crimping. The base wafer crimping process causes exposed body metal to a distance more than .094 inch (2.39 mm) above top edge of base wafer . . . . . Minor

b. Mars and peeling blemishes. Combined total area of exposed metal more than .250 inch (6.35 mm) by .125 inch (3.18 mm), or equivalent area . . . . . Minor

c. Scratches. A scratch on the painted surface exposing body metal more than a half inch (12.7 mm) in length for metal receiving tube types or 2 inches (50.8 mm) in length for other types . . . . . Minor

Source: https://assist.dla.mil -- Downloaded: 2016-11-03T17:33Z
Check the source to verify that this is the current version before use.

D.4.3 Base, base pin, insert, and cap defect classification.

D.4.3.1 Thermosetting plastic bases.

D.4.3.1.1 Side blisters.

a. Buried or unbroken surface. Outside diameter of base more than maximum. (Unbroken blisters shall be subjected only to pressure of a fingernail) . . . . . Major 1

b. Open blisters.

(1) Size. Any single open-surface blisters more than .125 by .125 inch (3.18 mm), or equivalent area . . . . . Minor

(2) Number. More than five open-surface blisters more than .030 inch (.76 mm) in maximum dimension . . . . . Minor

D.4.3.1.2 Bottom blisters.

a. Position. Blisters connecting any two base pins . . . . . Major 1

b. Height. Blister more than .010 inch (.25 mm) in height . . . . . Major 1

c. Type. Open-surface blisters more than .030 inch (.76 mm) in maximum dimension. (Unbroken blisters shall be subjected only to pressure of a fingernail) . . . . . Minor

D.4.3.1.3 Guide lug blisters. Outside diameter of lug more than maximum . . . . . Major 1

D.4.3.1.4 Chips.

a. Size. Chips less than .030 inch (.76 mm) in maximum dimension shall be accepted.

b. Depth. Individual chips more than .031 inch (.79 mm) in depth . . . . . Minor

c. Area. Chips more than .125 by .125 inch (3.18 mm) or equivalent area . . . . . Minor

d. Location.

(1) Corner chips. Corner chips extending more than .125 inch (3.18 mm) along any of the intersecting surfaces . . . . . Control

(2) Guide lug key. Guide lug key chips more than .030 inch (.76 mm) in longest dimension . . . . . Minor

D.4.3.1.5 Combinations. More than five open-surface blisters or five chipped places . . . Minor

D.4.3.1.6 Cracks. Any cracks . . . . . Major 1

D.4.3.1.7 Scratches. Base scratch over .750 inch (19.05 mm) long and having sufficient depth to definitely catch a fingernail (scratches which do not catch a fingernail shall not be rejected) Control

D.4.3.2 Ceramic bases.

D.4.3.2.1 Chips.

a. Depth. Individual chips more than .031 inch (.79 mm) in depth . . . . . Minor

b. Area. Chips more than .125 by .125 inch (3.18 mm), or equivalent area . . . . . Minor

Source: https://assist.dla.mil -- Downloaded: 2016-11-03T17:33Z
Check the source to verify that this is the current version before use.

c. Location.	
(1) Corner. Corner chips extending more than .125 inch (3.18 mm) along any of the intersecting surfaces	Minor
(2) Guide lug key. Guide lug key chipped	Major 1
D.4.3.2.2 Combinations. More than five open-surface blisters or five chipped places . . .	Minor
D.4.3.2.3 Cracks.	
a. Deep cracks. Any body cracks	Major 1
b. Glaze cracks.	
(1) Any glaze cracks extending from one pin to another	Minor
(2) Any other glaze cracks	Control
D.4.3.2.4 Scratches. Base scratched	Control
D.4.3.3 Metal bases.	
D.4.3.3.1 Dents.	
a. Number. More than two dents in a tube	Minor
b. Depth. Any dent more than .031 inch (.79 mm) in depth	Minor
D.4.3.3.2 Plating.	
a. A scratch exposing base metal more than .500 inch (12.70 mm) in length	Minor
b. Scratches not exposing base metal	Control
D.4.3.3.2.1 Peeling and blistering.	
a. Any peeling of plating where plating is required for electrical reasons	Major 1
b. Peeling of plating where appearance is seriously affected	Minor
c. Peeling of plating, or blisters, where appearance is involved, provided the appearance of the tube is not seriously affected	Control
D.4.3.4 Base pins.	
D.4.3.4.1 Bayonet pins.	
a. Lateral motion. Total lateral motion more than .016 inch (.41 mm)	Minor
b. Rotation.	
(1) The staked bayonet pin rotates, but cannot be pushed into base wall	Control
(2) Unstaked pin rotates	Minor

Source: https://assist.dla.mil -- Downloaded: 2016-11-03T17:33Z
Check the source to verify that this is the current version before use.

D.4.3.4.2 Contact pins.

a. Lateral motion. Total lateral motion of contact pins, other than pins sealed directly in glass, more than .031 inch (.79 mm) at pin tip when moved with the fingers . . . . . Minor

b. Rotation. Any contact pin rotation . . . . . Minor

c. Alignment. Pin alignment not conforming to pin alignment gauge when gauge is specified . . . . . Minor

D.4.3.4.2.1 Increased diameter by solder. Maximum diameter by presence of solder is more than that specified in table D-III . . . . . Minor

TABLE D-III. Increased diameter of contact pin.

Bogey pin diameter (base drawing)		Maximum diameter	
Inch	mm	Inch	mm
.093	(2.36)	.098	(2.49)
.125	(3.18)	.131	(3.33)
.156	(3.96)	.162	(4.11)
.187	(4.75)	.195	(4.95)
.312	(7.92)	.320	(8.13)

D.4.3.5 Base inserts.

D.4.3.5.1 Ceramic wafer.

a. Deep cracks . . . . . Major 1

b. Glaze cracks extending from any pin to another pin or to the sleeve . . . . . Minor

D.4.3.5.2 Glass. Unless otherwise specified, all cracks and chips on candelabra or other lamp bases with glass insulation shall be accepted.

D.4.3.6 Soft-solder defects.

a. Loose or unsoldered wires. Loose or unsoldered wire or wires in pins or caps . . . . . Major 1

b. Exposed wire. More than .031 inch (.79 mm) of wire length exposed beyond end of pin or cap, or .031 inch (.79 mm) of wire length exposed beyond solder when end of pin or cap is concealed by solder . . . . . Minor

c. Excess solder on pin. Criteria specified in D.4.3.4.2.1 shall be used.

D.4.3.7 Envelope-to-base.

a. Alignment.

(1) Envelope and base alignment for miniature types. The maximum angle between base and bulb shall be within 90 ±3.5 degrees . . . . . Minor

(2) Envelope and base alignment for subminiature types. The maximum angle between base and bulb shall be within 90 ±5 degrees . . . . . Control

Source: https://assist.dla.mil -- Downloaded: 2016-11-03T17:33Z
Check the source to verify that this is the current version before use.

(3) Envelope and base alignment for other than miniature and subminiature types. The maximum angle between base and bulb shall be 90 ±2.5 degrees	Minor
b. Looseness. Any looseness of cemented junction of base	Major 1
c. Excess cement.	
(1) Cement protruding more than .062 inch (1.57 mm) on bases less than 1.500 inches (38.10 mm) in diameter	Minor
(2) Cement protruding more than .188 inch (4.78 mm) on bases 1.500 inches (38.10 mm) or more in diameter	Minor
d. Voids.	
(1) Bases used for tube support failing base, cap, and insert secureness test	Major 1
(2) Bases not used for tube support and voids not totaling more than one-eighth of tube circumference	Control
D.4.3.8 Wafer-to-base or envelope	
a. Rotation. Total rotational movement of wafer with respect to crimped metal more than .031 inch (.79 mm) when tried with the fingers	Minor
b. Lateral motion. Any movement separating any part of the wafer away from the crimped metal more than .016 inch (.41 mm) when tried with the fingers	Minor
c. Crimping. The base-wafer crimping process causes exposed body metal to a distance more than .094 inch (2.39 mm) above top edge of base	Minor
D.4.3.9 Cap-to-envelope.	
a. Alignment. Centerline of cap departing from centerline of bulb by more than 10 percent of diameter of dome	Minor
b. Looseness. Any looseness of cemented junction of cap	Major 1
c. Rotation. Total rotation movement from cap to envelope of metal tubes more than 15 degrees when tried with the fingers	Minor
d. Excess cement. Excess cement protruding more than .031 inch (.79 mm) from edge of cap with contact diameter of .375 inch (9.35 mm) or less, or more than .062 inch (1.57 mm) from edge of cap with contact diameter more than .375 inch (9.53 mm)	Minor
e. Dents.	
(1) Any dent more than .031 inch (.79 mm) in depth	Minor
(2) More than two dents greater than .010 inch (.25 mm) in depth	Minor
f. Welds. Any missing welds	Minor

Source: https://assist.dla.mil -- Downloaded: 2016-11-03T17:33Z
Check the source to verify that this is the current version before use.

D.4.4 Lead defect classification.

a. Unconnected. Except where intended	Major 1
b. Condition.	
(1) Leads knotted or severely kinked	Control
(2) Frayed leads (stranded conductors). More than 10 percent of the strands broken	Major 1

NOTE: The free ends of broken strands shall be removed.

D.4.5 Internal defect classification.

D.4.5.1 Spot welding. Broken, open or not welded	Major 1
D.4.5.2 Cracked micas. Cracked through, except for bumper point	Control
D.4.5.3 Plates fused. In the active area of the plate, fused or incipient melting (holes or blisters) due to bombardment	Control
D.4.5.4 Getter area. Getter not flashed; getter missing or detached	Major 1
D.4.5.5 Getter peel. Peeled or blistered more than .031 inch (.79 mm) in longest dimension for subminiature tubes, and .062 inch (1.57 mm) in longest dimension for all other tubes	Minor

D.4.5.6 Loose particles in any part of finished tube.

D.4.5.6.1 Application. In addition to the criteria specified in D.5.5.6.2 through D.4.5.6.4, the following paragraphs specify applicable revised criteria for the particular tube family indicated:

Type of tube	Paragraph
Miniature and subminiature receiving	D.5.4.2
Transmitting and power rectifier	D.6.2.5

NOTE: Tubes with debatable particles shall remain in the sample and shall be subjected to the particles indicator test, method 1206.

D.4.5.6.2 Nonconducting particles.

a. Micas.	
(1) Any single particle more than .375 inch (9.53 mm) in longest dimension	Minor
(2) More than five of the mica particles more than .031 inch (.79 mm) in longest dimension	Minor

Source: https://assist.dla.mil -- Downloaded: 2016-11-03T17:33Z
Check the source to verify that this is the current version before use.

b. Other nonconducting particles.

(1) Any single particle more than .125 inch (3.18 mm) in longest dimension . . . . . Minor

(2) More than three of the particles greater than .016 inch (.41 mm) in longest dimension . . . . . Minor

D.4.5.6.3 Conducting particles. Any particle whose largest dimension is more than three-fourths of the design minimum interelement spacing (except heater cathode) or .016 inch (.41 mm), whichever is greater, but in any case, not more than .062 inch (1.57 mm) . . . . . Major 2

D.4.5.6.4 Debatable particles. Loose particles that cannot be seen or that by visual means alone cannot be determined to be of a conducting or nonconducting nature. If a decision on acceptance or rejection cannot be made, the individual tube in question shall be subjected to the particles-indicator test, method 1206 . . . . . Major 2

D.4.6 Missing or incorrect marking. Etch or brand is incorrect, or not legible . . . . . Major 1

Note: When impractical to etch or brand the tubes during manufacturing processes because of production techniques, this inspection shall be performed after the permanence of marking test (method 1105) when applicable, and at any time after final marking in accordance with 3.5 has been completed.

D.4.7 Vacuum seal (metal-to-glass) defect classification.

D.4.7.1 Copper-to-glass feather-edge seals.

a. Color.

(1) Black seals and seal colors outside range of light straw to deep red, inclusive (and brownish green for code 7052 glass) . . . . . Major 1

(2) Nonacceptable color more than 25 percent of the seal width, or .062 inch (1.57 mm), whichever is less . . . . . Minor

b. Shale, (parting of the glass and the metal). Width of shale more than 25 percent of the seal width . . . . . Major 1

c. Cracks. Spent external circumferential or moon cracks more than 25 percent of the seal width from the glass edge, or more than .094 inch (2.39 mm), whichever is less . . . . . Major 1

d. Bubbles.

(1) Loss of seal width due to bubbles is more than one-third . . . . . Minor

(2) Any single bubble more than one-sixth of the seal circumference . . . . . Minor

(3) Combined length of all bubbles more than one-third of the seal circumference . . . . . Minor

Source: https://assist.dla.mil -- Downloaded: 2016-11-03T17:33Z
Check the source to verify that this is the current version before use.

e. Combinations. A combination of the above defects is more than 33 percent of the seal width . . . . . Major 1

f. Splits in feather edge. Any split more than 25 percent of the seal width . . . . . Minor

D.4.7.2 Fernico-, Kovar-, or Rodar-to-glass seals.

a. Cylindrical-edge-type seals.

(1) Color. Less than .062 inch (1.57 mm) of the seal width has a color ranging between metallic gray and dark gray . . . . . Minor

Note: This criterion does not apply to seals which are plated prior to glassing; for example, chrome-, gold-, or silver-plated seals.

(2) Bubbles.

(a) Loss of seal width due to bubbles is more than one-third . . . . . Minor

(b) Any single bubble more than one-sixth of the seal circumference . . . . . Minor

(c) Combined length of all bubbles more than one-third of the seal circumference . . . . . Minor

(3) Shale. Width of shale more than 25 percent of the seal width . . . . . Major 1

(4) Cracks. Spent external circumferential or moon cracks more than 25 percent of the seal width from the glass edge, or more than .094 inch (2.93 mm), whichever is less . . . . . Major 1

(5) Splits in metal edge. Any split more than 25 percent of the seal width . . . . . Minor

b. Disc- and window-type seals.

(1) Shale. Width of shale more than 25 percent of the seal width, on seals .125 inch (3.18 mm) or more in width . . . . . Minor

(2) Cracks. Spent external circumferential or moon cracks within 25 percent of the seal width from the glass edge, or .062 inch (1.57 mm), whichever is less, on seals .125 inch (3.18 mm) or more in width, shall be accepted.

(a) All other cracks on seals .125 inch (3.18 mm) or more in width . . . . . Major 1

(b) Any degree of cracks on seals less than .125 inch (3.18 mm) in width . . . . . Major 1

Source: https://assist.dla.mil -- Downloaded: 2016-11-03T17:33Z
Check the source to verify that this is the current version before use.

(3) Bubbles.

(a) Any bubble more than .031 inch (.79 mm) in maximum dimension on seals less than .125 inch (3.18 mm) in width . . . . . Minor

(b) Any bubble more than .062 inch (1.57 mm) in maximum dimension on seals .125 inch (3.18 mm) or more in width . . . . . Minor

(c) Distance between bubbles of .016 inch (.41 mm) to .031 inch (.79 mm) in maximum dimension is less than .016 inch (.41 mm) on seals less than .125 inch (3.18 mm) in width . . . . . Minor

(d) Distance between bubbles of .031 inch (.79 mm) to .062 inch (1.57 mm) in maximum dimension is less than .016 inch (.41 mm) on seals .125 inch (3.18 mm) or more in width . . . . . Minor

(e) Cluster of bubbles of any size causes loss of seal width of 33 percent or more . . . . . Major 1

(4) Color. Less than one-third of the seal width has color ranging between metallic gray and dark gray . . . . . Minor

Note: This criterion does not apply to seals which are plated prior to glassing; for example, chrome-, gold-, or silver-plated seals.

c. Eyelet-to-glass-to-lead seal cracks. Annular cracks which surround the leads (see figure D-2, A) and radial cracks not more than two in number, not extending more than halfway between the lead and inside edge of eyelet, and not deeper than height of glass above eyelet (figure D-2 B), shall be accepted.

(1) Cracks extending across eyelet seal. (See figure D-2 C) . . . . . Major 1

(2) Shaled seals or seals with cracks which fall outside the above limits . . . . . Major 1

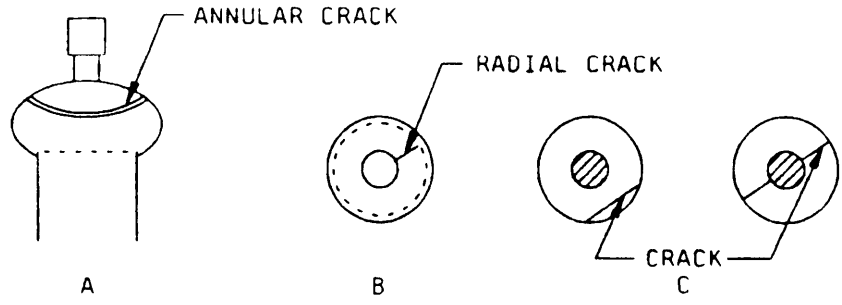

FIGURE D-2. Cracks.

Source: https://assist.dla.mil -- Downloaded: 2016-11-03T17:33Z
Check the source to verify that this is the current version before use.

D.4.7.3 Metallic rod-to-glass seals. Checks in envelope seals with external bosses.

a. Axial check exceeding in depth one-third of length of glass-to-metallic seal . . . . . Major 1

b. Radial checks extending more than .125 inch (3.18 mm) from the pin . . . . . Major 1

D.4.8 Air-cooled, fin-type radiator defect classification.

D.4.8.1 Solder obstruction. Solder between the fins completely around the edge of the envelope and inside the circumference of the outer shell up to .031 inch (.79 mm) or five percent of the fin width, whichever is greater. In addition, 10 percent of the spaces between the fins may be filled with solder up to 25 percent of the radial fin width . . . . . Control

Note: Fillets shall be accepted at all corners.

D.4.9 Surface conditions of die-cast aluminum sheeting. Sizes of flaws such as chipouts, unfilled areas, and blow holes shall conform to the limits specified in D.4.9.1. The filling material for such flaws shall be approved by the magnet user.

D.4.9.1 Limits.

a. Blow holes less than .030 inch (.76 mm) in diameter shall be accepted.

b. The maximum acceptable dimension (except as indicated for periphery of a cast or machined hole) of any defect, regardless of plug size specified, shall be .375 inch (9.53 mm). In areas other than the periphery of cast or machined holes provided for assembly or mounting purposes, blow holes shall not accept a gauge of the maximum size or appear with greater frequency than is indicated in the following:

(1) Not more than five flows .045 inch (1.14 mm) to .094 inch (2.39 mm), in a .500 inch (12.70 mm) diameter circle.

(2) Not more than 20 flaws .030 inch (.76 mm) to, but not including, .045 inch (1.14 mm), in a .500 inch (12.70 mm) diameter circle.

(3) Not more than a combination of 10 of the above flaws in a .500 inch (12.70 mm) diameter circle.

c. The maximum acceptable dimension of any defect occurring in the periphery of a cast or machined hole provided for assembly or mounting use, regardless of plug size specified, shall be .187 inch (4.75 mm). Not more than two defects shall appear in any periphery of a cast or machined hole.

d. Any defect capable of accepting the maximum plug gauge listed shall be filled, and the filler surface shall be made to conform to the shape of the adjacent surfaces.

e. Die-casting-holding-pin depressions, approximately .250 inch (6.35 mm) in diameter, uniform in size and location, shall be accepted.

f. Separation of aluminum cover and magnet shall not exceed .031 inch (.79 mm) where visible or exposed.

Source: https://assist.dla.mil -- Downloaded: 2016-11-03T17:33Z
Check the source to verify that this is the current version before use.

D.5 ADDITIONAL CRITERIA FOR MINIATURE AND SUBMINIATURE RECEIVING TUBES

D.5.1 Instructions. Internal and external defects shall be combined. A 10-power magnification shall be used for the defects described in the following paragraphs of this appendix:

D.4.1.8	D.5.3.2	D.5.4.2
D.4.5.1	D.5.3.3	D.5.4.3
D.4.5.2	D.5.3.4	D.5.4.5.1
D.5.2.1	D.5.4.1	

The requirements of D.4 to D.4.6, inclusive, of this appendix, shall be supplemented or amended by the requirements of D.5.2 to D.5.4.5.2, inclusive, of this appendix. Debatable tubes (tubes which cannot be determined to conform to any criteria of D.4.1.4 to D.4.1.8, inclusive, or D.5.2.1 or D.5.4.3 of this appendix) shall be subjected to the envelope strain test specified in method 2126. A tube passing the envelope strain test shall be considered acceptable under the visual inspection paragraph for which the tube was originally questioned. A tube failing the envelope strain tests shall be classified a defective under the visual inspection paragraph for which the tube was originally questioned.

D.5.2 Glass envelopes.

D.5.2.1 Chipped-out sections on external surface. Any chips deeper than .010 inch (.25 mm) or more than 1-1/2 mm in maximum dimension on the straight portion of the bulb, or on the header . . . . . Minor

D.5.2.2 Re-entrant exhaust tip. Re-entrant depth more than one-third of the tip diameter . . . . . Minor

D.5.2.3 Seals.

D.5.2.3.1 Blisters in dumet seals. Total length of blister-free seal less than twice the dumet wire diameter . . . . . Minor

D.5.2.3.2 Size. Tube does not fit applicable outline gauge . . . . . Control

D.5.3 Leads.

D.5.3.1 Missing pins or leads . . . . . Major 1

D.5.3.2 Corrosion (header and leads). Any corrosion of material causing a leakage path on the header, or any corrosion in the lead recesses of the header or on the leads . . . . . Minor

D.5.3.3 Burned dumet leads. Copper sheath has been burned through outside of the envelope . . . . . Minor

D.5.3.4 Tinning defects.

a. Tinning splashes. Foreign material adhering to the outside surface, or globules of tin adhering to the header of the untinned portion of the leads . . . . . Minor

b. Inadequate tinning. Bare spot encircling lead, or any spot .04 inch (1.02 mm) long or more, except within .05 inch (1.27 mm) or more than 1.50 inches (38.1 mm) from glass . . . . . Control

Source: https://assist.dla.mil -- Downloaded: 2016-11-03T17:33Z
Check the source to verify that this is the current version before use.

c. Excessive tinning. Maximum lead diameter is more than specified on the outline drawing from .05 inch (1.27 mm) to .25 inch (6.35 mm) from the base of the tube; or the lead diameter from .25 inch (6.35 mm) to 1.5 inches (38.1 mm) from the base of the tube is more than the maximum diameter by .021 inch (.53 mm). A micrometer shall be used for measurement . . . . . Minor

d. Lumpy tinning. Lumpy tinning shall be accepted if the lead diameter in individual spots is not more than one and one-half times the bogey lead diameter . . . . . Control

e. Incomplete tinning. Tinned portion of the lead does not extend to within .05 inch (1.27 mm) of the header . . . . . Minor

D.5.4 Internal defect classification.

D.5.4.1 Welds (other defects). Either element of a weldment reduced by more than one-half of its formed cross-sectional area, or splash from weld present on any element other than in original weld area . . . . . Control

D.5.4.1.1 Weldments (detached). Weldments that become detached . . . . . Major 1

D.5.4.2 Loose particles.

D.5.4.2.1 Procedure. All tubes shall be tapped in an upright position by the standard tapping procedure (specified in method 1201). Immediately after tapping, the tube shall be visually inspected for loose particles by rotating it about the main axis in a horizontal position. Tubes with debatable particles shall remain in the sample and shall be subjected to the particles indicator test, method 1206.

D.5.4.2.2 Nonconducting particles. Loose particles with a maximum dimension of more than .062 inch (1.57 mm) . . . . . Minor

D.5.4.2.3 Conducting particles.

a. Subminiature tubes. Loose particles with a maximum dimension of more than three-fourths of the nominal minimum interelement spacing (except heater cathode) or .003 inch (.08 mm), whichever is greater . . . . . Major 2

b. Miniature tubes. Loose particles with a maximum dimension greater than .016 inch (.41 mm) . . . . . Major 2

D.5.4.2.4 Debatable particles. Loose particles that cannot be seen or that by visual means alone cannot be determined to be conducting or non-conducting. If a decision on acceptance or rejection cannot be made, the individual tube in question shall be subjected to the particles indicator test, method 1206 . . . . . Major 2

D.5.4.2.5 Dangling particles or slivers. Dangling particles or slivers which are firmly attached shall be accepted. Debatable tubes shall be subjected to the particles indicator test, method 1206. The tube shall be considered acceptable if the particle is still attached at the conclusion of the particles indicator test . . . . . Major 2

D.5.4.3 Metal touching envelope. Metal parts of particles touching the envelope as identified by a white spot or check appearing in the glass (unless specifically intended by design) . . . . . Major 1

Source: https://assist.dla.mil -- Downloaded: 2016-11-03T17:33Z
Check the source to verify that this is the current version before use.

D.5.4.4 Missing points on mica. More than 25 percent of mica points on any mica that supports the tube structure . . . . . Control

D.5.4.5 Heater coating defects.

D.5.4.5.1 Chipped or cracked coating.

a. Heater coating on heater or heater legs missing or damaged exposing bare heater wire to within .020 inch (.51 mm) of entrance to cathode sleeve . . . . . Minor

b. Heater coating missing .020 inch (.51 mm) from the cathode or beyond exposing bare wire length exceeding the diameter of the coated heater wire . . . . . Control

c. Heater coating missing or exposing bare wire, length exceeding the diameter of the coated heater wire, when bare heater wire is contained within the cathode sleeve . . . . . Minor

D.5.4.5.2 Uncoated heater wire. Uncoated heater wire exceeding .062 inch (1.57 mm) measured from perimeter of weld toward the cathode . . . . . Minor

D.5.4.6 Getter defects.

a. Getter peel. Peeled or blistered larger than .031 inch (.79 mm) in longest dimensions . . . . . Minor

b. Getter area. Getter flash covers an area of less than .062 square inch (1.57 square mm) . . . . . Minor

c. Burned getter. Getter burned through . . . . . Major 2

D.5.4.7 Spacing. Spacing less than .010 inch (.25 mm) between elements, supports, etc., outside of the mount spacers, except where specifically intended by design . . . . . Minor

D.5.4.8 Cathode tabs. Any evidence of tear or crack in cathode tab occurring below the cathode weld . . . . . Minor

D.5.4.9 Mica coating. Clear mica path connecting any two adjacent elements exceeding in width the dimension of the smaller element (where coating is intended) . . . . . Minor

D.6 ADDITIONAL CRITERIA FOR TRANSMITTING AND POWER RECTIFIER TUBES

D.6.1 Instructions. Paragraphs D.3 to D.4.8 inclusive, of this appendix, as applicable, shall be supplemented or amended by D.6.2 to D.6.2.5.2, inclusive, of this appendix, as applicable.

D.6.2 Internal defect classification. During the inspection of glass envelope tubes, the class of defect shall be determined in accordance with the following criteria.

D.6.2.1 Metal touching envelope. Metal parts touching the envelope unless specifically intended by design . . . . . Major 1

D.6.2.2 Anode coating. Alloying of anode coating with anode basic material over 10 percent of the anode area as evidenced by shiny surfaces. Chipping or flaking of anode coating over 10 percent of the anode area . . . . . Minor

Source: https://assist.dla.mil -- Downloaded: 2016-11-03T17:33Z
Check the source to verify that this is the current version before use.

D.6.2.3 Welds (other defects). An element of a weldment reduced by more than one-half of its formed cross-sectional area . . . . . Control

D.6.2.4 Alignment of parts. Tubes with misaligned internal parts shall be accepted providing they pass other specified electrical and mechanical tests and inspections . . . . . Control

D.6.2.5 Loose particles.

a. With tube in an upright position, tap in accordance with procedure and tapping device specified in method 1201 for other than receiving tubes.

Note: In cases where the tap test is impractical due to design of application of the tube, for example, weight, size, mercury content, or operating position, the tapping may be omitted.

b. After tapping, the tube shall be inspected for nonadhering particles by holding the tube in one hand with the dome approximately 45 degrees below horizontal position and strike lightly, three times on the fingertips of the other hand. The tube shall then be rotated about its main axis and inspected for loose particles.

D.6.2.5.1 Power rectifier tubes.

a. Conducting particles. Two or more conducting particles, each having a dimension not greater than .031 inch (.79 mm) . . . . . Major 1

b. Nonconducting particles. Four or more nonconducting particles, each having a dimension not greater than .062 inch (1.57 mm) . . . . . Minor

D.6.2.5.2 Other transmitting tubes.

a. Conducting particles. Any particle whose largest dimension is more than three-fourths of the design minimum interelement spacing (except heater cathode) or .016 inch (.41 mm), whichever is greater, but in any case, not more than .062 inch (1.57 mm) . . . . . Major 2

b. Nonconducting particles.

(1) Glass slivers in tubes with metal-glass ring seals. any tube containing loose slivers where two or more slivers, each exceeding .156 inch (3.96 mm) longest dimension for seals 1.500 inches (38.10 mm) diameter or smaller, or three or more slivers each exceeding .250 inch (6.35 mm) longest dimension for seals larger than 1.500 inches (38.10 mm) diameter . . . . . Minor

(2) Tubes without metal-glass ring seals. Any tube containing loose nonconducting particles, exceeding .125 (3.18 mm) inch longest dimension in envelopes 2.500 inches (63.50 mm) diameter or smaller or exceeding .188 inch (4.78 mm) longest dimension in envelopes over 2.500 inches (63.50 mm) diameter . . . . . Minor

(3) Loose emission coating. Any tube containing three or more loose emission coating flakes, each exceeding .062 inch (1.57 mm) in longest dimension for tubes with filament power up to 40 watts, or five or more flakes, each exceeding 062 inch (1.57 mm) longest dimension for tubes with filament power of 40 watts or over . Minor

Source: https://assist.dla.mil -- Downloaded: 2016-11-03T17:33Z
Check the source to verify that this is the current version before use.

APPENDIX D

D.7 ADDITIONAL CRITERIA FOR CATHODE-RAY TUBES

D.7.1 Instructions. Paragraphs D.3 to D.4.8 inclusive, of this appendix, as applicable, shall be supplemented or amended by D.7.2 through D.7.3 of this appendix. This criteria applies to tubes of questionable quality only.

D.7.2 Screen and faceplate defects evaluation and classification. All screen and faceplate glass defects shall be classified as major 1 defects and assigned a group number.

a. Classification of screen and faceplate glass defects. All screen and faceplate glass defects shall be classified into one of the following groups:

Group 1	Dead spots
Group 2	Shaded or mottled area
Group 3	Face contour variations
Group 4	Surface blemish
Group 5	Color spot (cathode-ray tubes only)

b. Examples of common defects and applicable group numbers are as follows:

Defect	Group
Blister (except that clear buried or unbroken surface blister which which meets the requirements of D.7.2.4 of this appendix shall not be considered as defects)	1
Bruise or bruise check	1
Bull's-eye top	3
Carbonized mold (or plunger)	4
Chill wrinkle	4
Cold glass	4
Color spot	5
Color streak	2
Cord	4
Dirt on mold (or plunger)	1
Impact mark (outside surface)	4
Lap (inside surface)	4
Loading mark	2
Mold mark	2
Oil spot	4
Rust, rouge, or scale	1
Spew	2
Stone or embedded dirt	1
Suck-up or rundown	3

Source: https://assist.dla.mil -- Downloaded: 2016-11-03T17:33Z
Check the source to verify that this is the current version before use.

D.7.2.1 Spot defects.

a. Maximum sizes of nonelongated spots. Spots which are not elongated and are less than the dimensions specified below shall be acceptable:

Type of spot	Inch
Dead	.015 (.38 mm)
Bright	.015 (.38 mm)
Color	.040 (1.02 mm)

Spots which are not elongated and are more than the dimension specified above shall be assessed in accordance with tables D-IV, D-V, and D-VI.

b. Elongated spots.

(1) Elongated spots of any length whose maximum width is .010 inch (.25 mm) or less will be acceptable.

(2) Elongated spots between .010 inch (.25 mm) and .020 inch (.51 mm) in width whose length is .500 inch (12.70 mm) or less shall be included in the assessment of the total number of spots in accordance with tables D-IV, D-V, and D-VI. A tube shall be considered defective if it has elongated spots between .010 inch (.25 mm) and .020 inch (.51 mm) in width and more than .500 inch (12.70 mm) in length.

(3) The diameter of elongated spots whose width is more than .020 inch (.51 mm) shall be taken as half of the sum of the length and width. The resultant diameter shall be assessed in accordance with tables D-IV, D-V, and D-VI.

c. Size, number, and separation of spot defects. A tube shall be considered defective if the size and number of spots are more than or the separation of spots is less than, the values specified in tables D-IV, D-V, and D-VI.

TABLE D-IV. Acceptable spots (envelopes up to 7-1/2 inches in diameter or diagonal).

Type of spot	Maximum diameter		Number in one tube	Of which not more than	Are more than		Minimum separation	
	Inch	mm			Inch	mm	Inch	mm
Dead (blown envelopes)	.060	1.52	15	7	.030	.76	.250	6.35
Dead (pressed-face envelopes)	.040	1.02	15	5	.030	.76	.250	6.35
Bright	.040	1.02	6	2	.030	.76	.250	6.35
Color	.060	1.52	10	2	.050	1.27	.250	6.35

Source: https://assist.dla.mil -- Downloaded: 2016-11-03T17:33Z
Check the source to verify that this is the current version before use.

TABLE D-V. Acceptable spots (envelopes 7-1/2 to 17 inches in diameter or diagonal).

Type of spot	Maximum diameter		Number in one tube	Of which not more than	Are more than		Minimum separation	
	Inch	mm			Inch	mm	Inch	mm
Dead	.080	2.03	25	12	.040	1.02	.500	12.70
Bright	.060	1.52	9	2	.050	1.27	.500	12.70
Color	.080	2.03	16	2	.060	1.52	.500	12.70

(1) Zones for rectangular envelopes 17 inches or more diagonal. Faces of rectangular envelopes whose diagonals are more than 17 inches are divided into three zones, all centered on and aligned with the tube faceplate. Zone A is the central rectangle, zone B is a larger rectangle excluding zone A, and zone C is the area between zone B and the edge of the minimum useful screen (i.e., quality area). Sizes of zones A and B are as follows:

Envelope diagonal	Zone A	Zone B
Inches	Inches	Inches
17	5 x 7	10-1/4 x 11-1/4
20	6 x 8	11-1/2 x 13-1/4
21	6 x 8	11-1/2 x 14
24	7 x 9	13 x 15-1/2
27	10 x 12	15 x 18-1/2

TABLE D-VI. Acceptable spots (rectangular envelopes more than 17 inches diagonal).

Type of spot	Zone A			Zone B			Zone C			Total no. in one tube	Minimum separation 1/	
	Max dia		No.	Max dia		No.	Max dia		No.			
	Inch	mm		Inch	mm		Inch	mm			Inch	mm
Dead	.040	1.02	5	.060	1.52	7	.080	2.03	10	18	1	25.4
Bright	.040	1.02	2	.060	1.52	5	.070	1.78	6	12	1	25.4
Color	.060	1.52	6	.070	1.78	9	.080	2.03	12	20	1	25.4

1/ Any spot .030 inch (.76 mm) or less in diameter may be as close as .50 inch (12.7 mm) to any other spot.

D.7.2.2 Shaded or mottled areas. All degrees shall be accepted in which the florescent and, when applicable, phosphorescent characteristics are as specified, and in which there is not more than a two-to-one variation in any of these characteristics between the mottled or shaded areas and the surrounding unaffected area. A tube shall be considered defective if scum or spew is present whose length is more than 20 percent of the screen diameter or diagonal.

D.7.2.3 Face-contour variations. A tube shall be considered defective if face-contour variations are present which cause total internal reflection of light (for example, if the area looks black) when viewed at an angle of 30 degrees to the normal of the face surfaces at the point where the face-contour variation occurs.

Source: https://assist.dla.mil -- Downloaded: 2016-11-03T17:33Z
Check the source to verify that this is the current version before use.

D.7.2.4 Inside and outside surface blemishes. All degrees shall be accepted which are not visible to the unaided eye when viewed along the axis of the tube from a distance of three times the screen diameter or diagonal, or 12 inches, whichever is greater. Visible blemishes shall be classified as dead spots and shall conform to the requirements specified in tables D-IV, D-V, and D-VI.

D.7.2.5 Scratches.

a. A scratch of any length whose width is less than .002 inch (.05 mm) shall be accepted.

b. A tube having scratches of .002 inch (.05 mm) to .005 inch (.13 mm) in width whose combined total length is more than 2 inches (50.8 mm) shall be considered defective.

c. A tube having scratches of .005 inch (.13 mm) to .010 inch (.25 mm) in width whose combined total length is more than .500 inch (12.70 mm) shall be considered defective.

d. A tube having any scratches whose width is more than .010 inch (.25 mm) shall be considered defective.

D.7.2.6 Shear marks. A tube shall be considered defective if any outside shear marks are present in the useful screen area.

D.7.3 Envelope defects. All defects which fail to meet this criteria shall be classified as major 1 defects.

a. For elliptical defects in the form of stones, glass knots, bruises, and scales, the following equivalent diameter formula shall be used:

$$\text{Equivalent diameter} = \frac{\text{length} + \text{width}}{2}$$

b. All blisters, stones, glass knots, bruises and scales less than .030 inch (.76 mm) in diameter shall be accepted.

(1) Blisters.

(a) Open blisters. An envelope shall be considered defective if more than three open surface blisters are present which are more than .095 inch (2.41 mm) in diameter. This shall apply to envelopes of any size.

(b) Buried or unbroken blisters. An envelope shall be considered defective if the size and number of unbroken blisters are more than the values specified in table D-VII.

Source: https://assist.dla.mil -- Downloaded: 2016-11-03T17:33Z
Check the source to verify that this is the current version before use.

TABLE D-VII. Acceptable unbroken blisters.

Tube diameter	Blister size		Maximum number of blisters in any 2-inch (50.8 mm) diameter circle	Of which not more than	Have a length more than
	Maximum diameter	Elliptical limits			
Inches	Inch	Inches			Inch
1 to 3, incl	.095	.030 x .187 or .062 x .125 or .016 x .281	11	3	.062
Over 3 to 5-1/2, incl	.187	.125 x .281 or .062 x .500 or .031 x .750 or .016 x 1.000	11	3 and 2	.062 .500
Over 5-1/2 to 7, incl	.312	.250 x .500 or .125 x 1.000	11	3 and 2	.250 .500
Over 7	.375	.250 x .750 or .125 x 1.250	11	3 and 2	.312 .750

(2) Stones. An envelope shall be considered defective if stones exceed the following dimensions:

(a) More than .078 inch (1.98 mm) in diameter in envelopes up to and including 7 inches in diameter.

(b) More than .130 inch (3.30 mm) in diameter in envelopes over 7 inches in diameter.

(c) Exposed (not glazed over) stones more than .030 inch (.76 mm) in diameter on the outside glass surface.

(3) Glass knots. An envelope shall be considered defective if glass knots are more than .187 inch (4.75 mm) in diameter and if glass knots of any size protrude more than .030 inch (.76 mm).

(4) Bruises. An envelope shall be considered defective if bruises are more than .050 inch (1.27 mm) in diameter.

(5) Scale. An envelope shall be considered defective if scale exceeds the following dimensions:

(a) More than .030 inch (.76 mm) in diameter in envelopes up to and including 7 inches in diameter.

(b) More than .062 inch (1.57 mm) in diameter in envelopes over 7 inches in diameter.

Source: https://assist.dla.mil -- Downloaded: 2016-11-03T17:33Z
Check the source to verify that this is the current version before use.

(6) Cracks and checks. An envelope shall be considered defective if any cracks or checks are present.

(7) Chips. An envelope shall be considered defective if any unglazed chips are present.

(8) Scuff. An envelope shall be considered acceptable if scuff is present.

(9) Scratches. An envelope shall be considered defective if scratches exceed the following dimensions:

(a) Between .002 inch (.05 mm) and .004 inch (.10 mm) in width that are more than 2 inches (50.8 mm) in length.

(b) Between .004 inch (.10 mm) and .006 inch (.15 mm) in width that are more than .500 inch (12.70 mm) in length.

(c) More than .006 inch (.15 mm) in width.

(10) Radius lap and outside shear marks. Radius lap and outside shear marks shall be accepted.

(11) Finish. Splice contours shall be as smooth and as free from sharp reentrant angles as good commercial practice permits.

Source: https://assist.dla.mil -- Downloaded: 2016-11-03T17:33Z
Check the source to verify that this is the current version before use.

APPENDIX E

PROCEDURE FOR INSPECTION OF A MANUFACTURER'S PLANT

E.1 SCOPE

E.1.1 Scope. This appendix establishes the procedure for the inspection of a manufacturer's plant by the qualifying activity. This appendix is a mandatory part of this specification. The information contained herein is intended for compliance.

E.2 APPLICABLE DOCUMENTS

E.2.1 General. The documents listed in this section are specified in section E.3 of this appendix. This section does not include documents cited in other sections of this appendix or recommended for additional information or as examples. While every effort has been made to ensure the completeness of this list, document users are cautioned that they must meet all specified requirements documents cited in section E.3 of this appendix, whether or not they are listed.

E.2.2 Non-Government publications. The following document forms a part of this document to the extent specified herein. Unless otherwise specified, the issues of the documents which are DoD adopted are those listed in the issue of the DoDISS cited in the solicitation. Unless otherwise specified, the issues of documents not listed in the DoDISS are the issues of the documents cited in the solicitation.

AMERICAN NATIONAL STANDARDS INSTITUTE (ANSI)

ANSI-Z540.1 - Laboratories, Calibration, and Measuring and Test Equipement

(Application for copies should be addressed to the American National Standards Institute, 11 West 42nd Street, New York, NY 10036.)

E.2.3 Order of precedence. In the event of a conflict between the text of this document and the references cited herein, the text of this document takes precedence. Nothing in this document,however, supersedes applicable laws and regulations unless a specific exemption has been obtained.

E.3 INSPECTION OF MANUFACTURER'S PLANT

E.3.1 Instructions. If an inspection of the test facilities is required, the qualifying activity will inform the manufacturer of the date that the facilities are to be inspected. The manufacturer will have his proposed test equipement in operating condition and his test personnel, certificates, and records of calibration available at the time of the facilities' inspection. Certificates of calibration for the reference standards are to be obtained by the manufacturer from the National Institute of Standards and Technology (NIST), the original equipment manufacturer, or an acceptable independent calibration laboratory. Transfer standards may be calibrated by the manufacturer. Dates of calibration, historic charts, and/or graphs are to be maintained and available. All calibration standards and all equipment used for qualification testing must have been calibrated within one year of the initiation of tests or more frequently as required. Calibration systems will be evaluated against the requirements of the latest revision of ANSI-Z540.1. The calibration system description shall provide a complete detailed plan for monitoring the accuracy of every item of measuring and test equipment and every measurement standard utilized in qualification testing. A method, procedure, or standard practice must be prescribed for the satisfaction of each applicable requirement of the latest revision of ANSI-Z540.1. A resume of the pertinent education and experience for the personnel associated with qualification testing at the manufacturer's plant will be made available to the visiting Government inspection personnel.

Source: https://assist.dla.mil -- Downloaded: 2016-11-03T17:33Z
Check the source to verify that this is the current version before use.

APPENDIX F

PROCEDURE FOR CONDUCTING FIRST ARTICLE TESTING

F.1 SCOPE

F.1.1 Scope. This appendix establishes the procedure and criteria for invoking first article testing in lieu of qualification. This appendix is a mandatory part of this specification. The information contained herein is intended for compliance.

F.2 APPLICABLE DOCUMENTS. This section is not applicable to this document.

F.3 GENERAL INSTRUCTIONS

a. This procedure provides for first article testing as a replacement for qualification testing whenever there has been a TSS in existence for a long period of time and no source has qualified; or where sources have qualified a product and are nonresponsive to an invitation for bid (IFB), or where procurement is necessary before a source has qualified a product. Then, qualification requirements may be deleted or waived and first article inspection invoked for the acquisition of an item covered by a military specification.

b. The contract must specify the applicable document(s) for first article testing. The sample sizes and acceptance criteria for first article testing shall be as specified in table I of this specification (samples and acceptance criteria for qualification). The first article testing shall commence at the manufacturer's plant after award of the contract, unless otherwise specified. The specimens to be tested shall be representative of the product to be produced for delivery on the contract or purchase order.

c. The first article samples shall be forwarded to the contracting agency (or other agencies as designated by the contracting agency) for approval. The tested specimens shall be retained by the contracting agency to serve as a reference standard. Approval of the first article specimens is required prior to delivery of units on the contract. The fabrication of production units prior to approval of the specimens shall be at the manufacturer's risk.

d. Two copies of test reports, photographs, etc., shall be prepared. One copy of each shall be forwarded to the preparing activity or its agent for the specification.

Source: https://assist.dla.mil -- Downloaded: 2016-11-03T17:33Z
Check the source to verify that this is the current version before use.

INDEX

Title	Paragraph
Abbreviations and symbols	App. B-B.3
Absolute ratings	3.4.5
Acceptance and rejection criteria	4.3.5.3
Acquisition requirements	6.2
Additional criteria for cathode-ray tubes	App. D-D.7
Additional criteria for miniature and subminiature receiving tubes	App. D-D.5
Additional criteria for transmitting and power rectifier tubes	App. D-D.6
Air-cooled fin-type radiator defect classification	App. D-D.4.8
Alignment of parts	App. D-D.6.2.4
Anode coating	App. D-D.6.2.2
Anode voltage	3.4.5.2.1
Application	App. D-D.4.5.6.1
Applicable documents	2., App. A-A.2, B-B.2, C-C.2, D-D.2, E-E.2, F-F.2
Barometric pressure (altitude) rating	3.4.5.1
Base, base pin, insert and cap defect classification	App. D-D.4.3
Base cementing	3.4.3
Base connections	3.4.2
Base inserts	App. D-D.4.3.5
Base material	3.4.1
Base pins	App. D-D.4.3.4
Base-strain test, miniature tube, sampling	4.3.5
Bayonet pins	App. D-D.4.3.4.1
Blisters	App. D-D.4.1.2
Blisters in dumet seals	App. D-D.5.2.3.1
Bottom blisters	App. D-D.4.3.1.2
Burned dumet leads	App. D-D.5.3.3
Capacitance shields	App. C-C.3.2
Cap-to-envelope	App. D-D.4.3.9
Cathode-ray tubes, additional criteria	App. D-D.7
Cathode tabs	App. D-D.5.4.8
Ceramic bases	App. D-D.4.3.2
Ceramic wafer	App. D-D.4.3.5.1
Changes from previous issue	6.5
Checks and cracks	App. D-D.4.1.5
Chipped-out sections on external surface	App. D-D.5.2.1
Chipped or cracked coating	App. D-D.5.4.5.1
Chips	App. D-D.4.3.1.4 and D.4.3.2.1
Classification	1.2
Classification of inspections	4.1
Color coding	3.4.4
Combinations	App. D-D.4.3.1.5 and D.4.3.2.2
Contact pins	App. D-D.4.3.4.2
Conducting particles	App. D-D.4.5.6.3 and D.5.4.2.3
Copper-to-glass feather-edge seals	App. D-D.4.7.1
Corrosion (header and leads)	App. D-D.5.3.2
Country of origin	3.5.6
Cracked micas	App. D-D.4.5.2
Cracks	App. D-D.4.3.1.6 and D.4.3.2.3
Criteria	App. D-D.3.4
Critical interfaces	3.4

Source: https://assist.dla.mil -- Downloaded: 2016-11-03T17:33Z
Check the source to verify that this is the current version before use.

INDEX

Title	Paragraph
Dangling particles or slivers	App. D-D.5.4.2.5
Debatable particles	App. D-D.4.5.6.4 and D.5.4.2.4
Delayed shipment of inspected tubes	4.7
Default sampling plans	4.3.1.1
Dents	App. D-D.4.2.1 and and D.4.3.3.1
Dimensions	App. D.3.2
Discontinuance of production	4.2.7
Disposition of sample units	4.9
EIA outline drawing number	App. C-C.3.1.1
Envelope defects	App. D-D.7.3
Envelope-to-base	App. D-D.4.3.7
Face contour variations	App. D-D.7.2.3
Fernico-, Kovar-, or Rodar-to-glass seals	App. D-D.4.7.2
First article	3.3 and 6.3.1
General	2.1, 3.1, App. A-A.2.1, C-C.2.1, D-D.2.1, E-E.2.1
General criteria (visual and mechanical inspection)	App. D-D.4
General instructions	App. D-D.3, F-F.3
Getter area	App. D-D.4.5.4
Getter defects	App. D-D.5.4.6
Getter peel	App. D-D.4.5.5
Glass	App. D-D.4.3.5.2
Glass adhered	App. D-D.4.1.4
Glass defects and terminology	App. D-D.3.5
Glass envelopes	App. D-D.5.2
Glass-envelope defect classification	App. D-D.4.1
Glass knots	App. D-D.4.1.7
Government documents	2.2, App. A-A.2.2,
Group life tests	4.3.9.4
Guide lug blisters	App. D-D.4.3.1.3
Heater coating defects	App. D-D.5.4.5
Heater cycling life-test	4.3.9.3
Inadequate marking area	3.5.9
Increased diameter by solder	App. D-D.4.3.4.2.1
Inside and outside surface blemishes	App. D-D.7.2.4
Inspection conditions	4.4
Inspection of a manufacturers plant	App. E-E.3
Instructions	App. D-D.5.1, D.6.1, and D.7.1, E-E.3.1
Intended uses	6.1
Intermittent life-test	4.3.9.2
Internal defect classification	App. D-D.4.5, D.5.4, and D.6.2
"JAN" prefix	3.5.2
Lead defect classification	App. D-D.4.4
Leads	App. D-D.5.3
Limits	App. D-D.4.9.1
Life-test data	4.2.4
Life-testing	4.3.8
Life-test sampling plans	4.3.9
Loose particles	App. D-D.5.4.2 and D.6.2.5

Source: https://assist.dla.mil -- Downloaded: 2016-11-03T17:33Z
Check the source to verify that this is the current version before use.

INDEX

Title	Paragraph
Loose particles in any part of finished tube	App. D-D.4.5.6
Lot identification (lot data code)	3.5.3
Lot sizes for tubes listed on generic specification sheets	4.1.2
Magnetron tube components	App. C-C.3.3
Magnification	App. D-D.3.3
Manufacturer's designating symbol (CAGE code)	3.5.5
Manufacturer's identification	3.5.4
Marking	3.5
Marking of samples	4.2.1.1
Metal bases	App. D-D.4.3.3
Metal envelope defect classification	App. D-D.4.2,
Metal touching envelope	App. D-D.5.4.3 and D.6.2.1
Metallic rod-to-glass seals	App. D-D.4.7.3
Metric equivalents	App. C-C.3.1.2
Mica coating	App. D-D.5.4.9
Miniature and subminiature receiving tubes, additional criteria for	App. D-D.5
Missing or incorrect marking	App. D-D.4.6
Missing pins or leads	App. D-D.5.3.1
Missing points on mica	App. D-D.5.4.4
Nonconforming lots	4.3.4
Nonconducting particles	App. D-D.4.5.6.2
Normal inspection	4.3.2 and 4.3.5.1
Non-Government publications	2.3, App. A-A.2.3, C-C.2.2, D-D.2.2, E-E.2.2
Notes	6.
Operational life	4.2.3
Order of precedence	2.4, App. A-A.2.4, C-C.2.3, D-D.2.3, E-E.2.3
Other transmitting tubes	App. D-D.6.2.5.2
Packaging	5., 5.1
Paint finish	App. D-D.4.2.2
Peeling and blistering	App. D-D.4.3.3.2.1
Permanence of marking sampling	4.3.7
Plates fused	App. D-D.4.5.3
Plating	App. D-D.4.3.3.2
Power rectifier tubes	App. D-D.6.2.5.1
Prior Government approval	4.2.5
Procedure	App. D-D.5.4.2.1
Publications (non-Government)	2.2, App. A-A.2.2 C-C.2.1, D-D.2.1
Purpose	App. B-B.1.2
Qualification	3.2, 4.2, and 6.3
Qualification by similarity	4.2.2
Quality conformance inspection (QCI)	4.3
Radioactive marking	3.5.7
Receiving tube ratings	3.4.5.2
Records	4.3.5.5
Reduced pressure (altitude) rating	3.4.5.2.3
Re-entrant exhaust tip	App. D-D.5.2.2
Rejected tubes	4.3.5.4
Rejected lots	4.8
Requirements	3.
Retention of qualification	4.2.6

Source: https://assist.dla.mil -- Downloaded: 2016-11-03T17:33Z
Check the source to verify that this is the current version before use.

INDEX

Title	Paragraph
Samples and acceptance criteria	4.2.1
Sampling	4.3.5.2
Sampling plans	4.3.1
Scale	App. D-D.4.1.6
Scope	1., 1.1, App. A-A.1, B-B.1, C-C.1, D-D.1, E-E.1, F-F.1
Scratches	App. D-D.4.1.3, D.4.3.1.7, D.4.3.2.4, and D.7.5.2
Screen and faceplate defects evaluation and classification	App. D-D.7.2
Screen voltage	3.4.5.2.2
Seals	App. D-D.5.2.3
Service-life guarantee	3.5.8 and 4.5
Shaded or mottled areas	App. D-D.7.2.2
Shear marks	App. D-D.7.2.6
Shelf life	3.5.10 and 4.6
Shock test sampling	4.3.6
Side blisters	App. D-D.4.3.1.1
Size	App. D-D.5.2.3.2
Soft solder defects	App. D-D.4.3.6
Solder obstruction	App. D-D.4.8.1
Spacing	App. D-D.5.4.7
Specifications, and standards	2.2.1, App. A-A.2.2.1,
Spot defects	App. D-D.7.2.1
Spot welding	App. D-D.4.5.1
Stability life-test	4.3.9.1
Stones	App. D-D.4.1.1
Subject term (key word) listing	6.4
Surface conditions of die-cast aluminum sheeting	App. D-D.4.9
Terminology	App. A-A.3
Terms, definitions, methods, abbreviations, and symbols	3.1.2
Testing provisions and inspection conditions	4.1.1
Thermosetting plastic bases	App. D-D.4.3.1
Tightened inspection	4.3.3
Tinning defects	App. D-D.5.3.4
Tip defects	App. D-D.4.1.8
Transmitting tubes and power rectifier tubes, additional criteria for	App. D-D.6
Tube outline drawings	App. C-C.3, C.3.1.3
Tube specification sheets (TSS)	3.1.1
Tubes and component parts	App. C-C.3.1
Type number	3.5.1
Uncoated heater wire	App. D-D.5.4.5.2
Vacuum seal (metal-to-glass) defect classification	App. D-D.4.7
Verification	4.
Visual and mechanical	App. D-D.3.1
Wafer-to-base or envelope	App. D-D.4.3.8
Weldments (detached)	App. D-D.5.4.1.1
Welds (other defects)	App. D-D.5.4.1 and D.6.2.3
Workmanship	3.6

Source: https://assist.dla.mil -- Downloaded: 2016-11-03T17:33Z
Check the source to verify that this is the current version before use.

INDEX

Figure	Title
1.	Reduced pressure (altitude) voltage breakdown characteristics.
C-1.	Pole tips and gaps for magnetron tubes.
C-2.	Locking jack and plug for magnetron tubes.
D-1.	Classification of soft glass unbroken blister sizes.
D-2.	Cracks.

Table	
I.	Altitude/pressure conversion.
II.	Sample and acceptance criteria for qualification.
III.	Sampling plans.
C-I.	Cross reference, tube outline drawings.
D-I.	Sampling plan for visual and mechanical inspection.
D-II.	Standard inspection provision for EIA outlines.
D-III.	Increased diameter of contact pin.
D-IV.	Acceptable spots (envelopes up to 7-1/2 inches in diameter or diagonal).
D-V.	Acceptable spots (envelopes 7-1/2 to 17 inches in diameter or diagonal).
D-VI.	Acceptable spots (rectangular envelopes more than 17 inches diagonal).
D-VII.	Acceptable unbroken blisters.

CONCLUDING MATERIAL

Custodians:
Army - ER
Navy - EC
Air Force - 17

Review activities:
Army - AR, AT, AV, MI, SM
Navy - AS, CG, MC, OS, SH
Air Force - 11, 19, 85, 99

Preparing activity:
DLA - ES

(Project 5960-3422)

Source: https://assist.dla.mil -- Downloaded: 2016-11-03T17:33Z
Check the source to verify that this is the current version before use.

STANDARDIZATION DOCUMENT IMPROVEMENT PROPOSAL

INSTRUCTIONS

1. The preparing activity must complete blocks 1, 2, 3, and 8. In block 1, both the document number and revision letter should be given.
2. The submitter of this form must complete blocks 4, 5, 6, and 7.
3. The preparing activity must provide a reply within 30 days from receipt of the form.

NOTE: This form may not be used to request copies of documents, nor to request waivers, or clarification of requirements on current contracts. Comments submitted on this form do not constitute or imply authorization to waive any portion of the referenced document(s) or to amend contractual requirements.

[redacted]	1. DOCUMENT NUMBER MIL-PRF-1L	2. DOCUMENT DATE (YYMMDD) XX-XX-XX

3. DOCUMENT TITLE
ELECTRON TUBES, GENERAL SPECIFICATION FOR, APPENDIXES A THROUGH E

4. NATURE OF CHANGE (Identify paragraph number and include proposed rewrite, if possible. Attach extra sheets as needed.)

5. REASON FOR RECOMMENDATION

[redacted]

8. PREPARING ACTIVITY

a. NAME Tom Greger	b. TELEPHONE (Include Area Code) (1) Commercial: 513-296-6048 (2) AUTOVON: 986-6048
c. ADDRESS (Include Zip Code) Defense Electronics Supply Center Attn: DESC-ELDT Dayton, Ohio 45444-5765	IF YOU DO NOT RECEIVE A REPLY WITHIN 45 DAYS, CONTACT: Defense Quality and Standardization Office 5203 Leesburg Pike, Suite 1403, Falls Church, VA 22041-3466 Telephone (703) 756-2340 AUTOVON 289-2340

Source: https://assist.dla.mil -- Downloaded: 2016-11-03T17:33Z
Check the source to verify that this is the current version before use.