The documentation and process conversion measures necessary to comply with this revision shall be completed by 14 July 1995

INCH-POUND

MIL-S-19500/366D
14 April 1995
SUPERSEDING
MIL-S-19500/366C
25 April 1994

MILITARY SPECIFICATION

SEMICONDUCTOR DEVICE, TRANSISTOR, NPN, SILICON, AMPLIFIER
TYPES 2N3498, 2N3498L, 2N3499, 2N3499L, 2N3500, 2N3500L, 2N3501 AND 2N3501L
JAN, JANTX, JANTXV, AND JANS

Device types 2N3498, 2N3499, 2N3500, and their corresponding L suffix versions are INACTIVE FOR NEW DESIGN as of the date of this revision (see 6.3).

This specification is approved for use by all Departments and Agencies of the Department of Defense.

1. SCOPE

1.1 Scope. This specification covers the detail requirements for NPN, silicon, low-power amplifier and switching transistors. Four levels of product assurance are provided for each device type as specified in MIL-S-19500.

1.2 Physical dimensions. See 3.3 (similar to TO-5, TO-39).

1.3 Maximum ratings.

TYPES 1/	P_T 2/ T_A = +25°C	P_T 3/ T_C = +25°C	V_{CBO}	V_{CEO}	V_{EBO}	I_C	$R_{\theta JA}$	$R_{\theta JC}$	T_{STG} and T_{OP}
	W	W	V dc	V dc	V dc	mA dc	°C/W	°C/W	°C
2N3498	1	5	100	100	6	500	175	35	-55 to +200
2N3499	1	5	100	100	6	500	175	35	-55 to +200
2N3500	1	5	150	150	6	300	175	35	-55 to +200
2N3501	1	5	150	150	6	300	175	35	-55 to +200

1/ Electrical characteristics for "L" suffix devices are identical to their corresponding "non L" suffix devices.
2/ Derate linearly 5.71 mW/°C for TA > +25°C.
3/ Derate linearly 28.6 mW/°C for TC > +25°C.

Beneficial comments (recommendations, additions, deletions) and any pertinent data which may be of use in improving this document should be addressed to: Director, US Army Research Laboratory, Physical Sciences Directorate, ATTN: AMSRL-PS-DC, Ft. Monmouth, NJ 07703-5601 by using the Standardization Document Proposal (DD Form 1426) appearing at the end of this document or by letter.

AMSC N/A

FSC 5961

Distribution Statement A. Approved for Public release; distribution is unlimited.

Source: https://assist.dla.mil -- Downloaded: 2016-12-04T05:17Z
Check the source to verify that this is the current version before use.

1.4 Primary electrical characteristics at T_A = +25°C.

TYPE 1/	h_{FE} at V_{CE} = 10 V dc								$\|h_{fe}\|$ V_{CE} = 20 V dc I_C = 20 mA dc f = 100 MHz		C_{obo} V_{CE} = 10 V dc I_E = 0 100 kHz ≤ f ≤ 1 MHz	
	h_{FE1} 2/ I_C = 0.1 mA dc		h_{FE4} 2/ I_C = 150 mA dc		h_{FE5} 2/ I_C = 300 mA dc		h_{FE6} 2/ I_C = 500 mA dc					
	Min	Max	Min	Max	Min	Max	Min	Max	Min	Max	Min	Max
2N3498	20		40	120			15		1.5	8		10
2N3499	35		100	300			20		1.5	8		10
2N3500	20		40	120	15				1.5	8		8
2N3501	35		100	300	20				1.5	8		8

1/ Electrical characteristics for the "L" suffix devices are identical to the corresponding "non L" suffix devices.
2/ Pulsed (see 4.5.1)

Types 1/	$V_{CE(sat)}$ 2/				$V_{BE(sat)}$ 2/				t_{on}		t_{off}	
	I_C = 150 mA dc I_B = 15 mA dc		I_C = 300 mA dc I_B = 30 mA dc		I_C = 150 mA dc I_B = 15 mA dc		I_C = 300 mA dc I_B = 30 mA dc		I_C = 150 mA dc I_{B1} = 15 mA dc V_{EB} = 2 V dc		I_C = 150 mA dc I_{B1} = $-I_{B2}$ = 15 mA dc	
	Min	Max	Min	Max	Min	Max	Min	Max	Min (ns)	Max	Min (ns)	Max
2N3498				0.6				1.4		115		1150
2N3499				0.6				1.4		115		1150
2N3500		0.4				1.2				115		1150
2N3501		0.4				1.2				115		1150

1/ Electrical characteristics for the "L" suffix devices are identical to the corresponding "non L" suffix devices.
2/ Pulsed see 4.5.1.

Source: https://assist.dla.mil -- Downloaded: 2016-12-04T05:17Z
Check the source to verify that this is the current version before use.

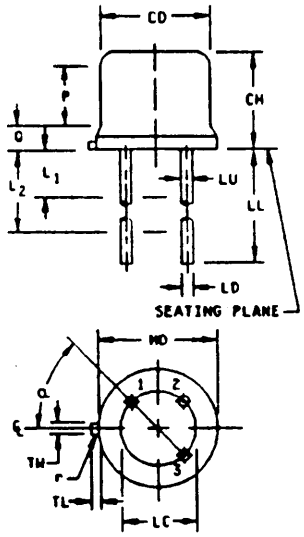

Symbol	Inches		Millimeters		Note
	Min	Max	Min	Max	
CD	.305	.335	7.75	8.51	
CH	.240	.260	6.10	6.60	
HD	.335	.370	8.51	9.40	
LC	.200 TP		5.08 TP		6
LD	.016	.021	.41	.53	7
LL	See notes 7, 12, 13,				
LU	.016	.019	.41	.48	7,13
L1		.050		1.27	13
L2	.250		6.35		13
TL	.029	.045	.74	1.14	3
TW	.028	.034	.710	.860	10,11
P	.100		2.54		5
Q		.050		1.27	4
r		.010		.250	11
α	45° TP		45° TP		6

NOTES:

1. Dimensions are in inches.
2. Metric equivalents are given for general information only.
3. Symbol TL is measured from HD maximum.
4. Details of outline in this zone are optional.
5. Symbol CD shall not vary more than .010 (0.25 mm) in zone P. This zone is controlled for automatic handling.
6. Leads at gauge plane .054 inch (1.37 mm) +.001 inch (0.03 mm) -.000 inch (0.00 mm) below seating plane shall be within .007 inch (0.18 mm) radius of true position (TP) relative to tab. Device may be measured by direct methods or by gauge.
7. Symbol LD applies between L_1 and L_2. Dimension LD applies between L_2 and LL minimum. Lead diameter shall not exceed .042 inch (1.07 mm) within L_1 and beyond LL minimum.
8. Lead designation, shall be as follows: 1 - emitter, 2 - base, 3 - collector.
9. Lead number three is electrically connected to case.
10. Beyond r maximum, TW shall be held for a minimum length of .011 inch (0.28 mm).
11. Symbol r applied to both inside corners of tab.
12. For transistor types 2N3498, 2N3499, 2N3500, and 2N3501, LL = .50 inch (12.70 mm) minimum and .750 inch (19.05 mm) maximum. For transistor types 2N3498L, 2N3499L, 2N3500L, and 2N3501L, LL = 1.50 inch (38.10 mm) minimum and 1.750 inch (44.45 mm) maximum.
13. All three leads.

FIGURE 1. Physical dimensions.

Source: https://assist.dla.mil -- Downloaded: 2016-12-04T05:17Z
Check the source to verify that this is the current version before use.

2. APPLICABLE DOCUMENTS

2.1 Government documents.

2.1.1 Specifications, standards, and handbooks. The following specifications, standards, and handbooks form a part of this document to the extent specified herein. Unless otherwise specified, the issues of these documents are those listed in the issue of the Department of Defense Index of Specifications and Standards (DODISS) and supplement thereto, cited in the solicitation (see 6.2).

SPECIFICATION

MILITARY

MIL-S-19500 - Semiconductor Devices, General Specification for.

STANDARD

MILITARY

MIL-STD-750 - Test Methods for Semiconductor Devices.

(Unless otherwise indicated, copies of federal and military specifications, standards and handbooks are available from the Defense Printing Service Detachment Office, Bldg. 4D (Customer Service), 700 Robbins Avenue, Philadelphia, PA 19111-5094.)

2.2 Order of precedence. In the event of a conflict between the text of this document and the references cited herein, the text of this document take precedence. Nothing in this document, however, supersedes applicable laws and regulations unless a specific exemption has been obtained.

3. REQUIREMENTS

3.1 Associated Detail specification. The individual item requirements shall be in accordance with MIL-S-19500 and as specified herein.

3.2 Abbreviations, symbols, and definitions. Abbreviations, symbols, and definitions used herein shall be as specified in MIL-S-19500.

3.3 Design, construction, and physical dimensions. The design, construction, and physical dimensions shall be as specified in figure 1 herein.

3.3.1 Lead finish. Lead finish shall be solderable as defined in Mil-S-19500.

3.4 Marking. Marking shall be in accordance with MIL-S-19500.

4. QUALITY ASSURANCE PROVISIONS

4.1 Sampling and inspection. Sampling and inspection shall be in accordance with MIL-S-19500, and as specified herein.

4.2 Qualification inspection. Qualification inspection shall be in accordance with MIL-S-19500.

Source: https://assist.dla.mil -- Downloaded: 2016-12-04T05:17Z
Check the source to verify that this is the current version before use.

4.3 Screening (JANS, JANTX, and JANTXV levels only). Screening shall be in accordance with table II of MIL-S-19500, and as specified herein. The following measurements shall be made in accordance with table I herein. Devices that exceed the limits of table I herein shall not be acceptable.

Screen (see table II of MIL-S-19500)	Measurement	
	JANS level	JANTX and JANTXV levels
9	I_{CBO1} and h_{FE4}	Not applicable
11	I_{CBO1} and h_{FE4}; ΔI_{CBO} = 100% of initial value or 5 nA dc, whichever is greater; Δh_{FE4} = ±15% of initial value.	I_{CBO1} and h_{FE4}
12	See 4.3.1	See 4.3.1
13	Subgroups 2 and 3 of table I herein; ΔI_{CBO1} = 100% of initial value or 5 nA dc, whichever is greater; Δh_{FE4} = ±15% of initial value.	Subgroup 2 of table I herein; ΔI_{CBO1} = 100% of initial value or 5 nA dc, whichever is greater; Δh_{FE4} = ±15% of initial value.

4.3.1 Power burn-in conditions. Power burn-in conditions are as follows: T_A = Room ambient as defined in the general requirements of MIL-STD-750 (see 4.5):

JANS (all device types) . . . . . V_{CB} = 30 V dc, P_T = 1.0 W .
JANTX, and JANTXV levels:
2N3498, 2N3499 . . . . . V_{CB} = 60 V dc, P_T = 1.0 W.
2N3500, 2N3501 . . . . . V_{CB} = 100 V dc, P_T = 1.0 W.

NOTE: No heat sink or forced air cooling on the devices shall be permitted. Electrical characteristics for the "L" suffix devices are identical to the corresponding non "L" suffix devices.

4.4 Quality conformance inspection. Quality conformance inspection shall be in accordance with MIL-S-19500.

4.4.1 Group A inspection. Group A inspection shall be conducted in accordance with MIL-S-19500 and table I herein. Electrical measurements (end-points) and delta requirements shall be in accordance with the applicable steps of table II herein.

4.4.2 Group B inspection. Group B inspection shall be conducted in accordance with the conditions specified for subgroup testing in table IVa (JANS) and table IVb (JAN, JANTX, and JANTXV) of MIL-S-19500 and as follows. Electrical measurements (end-points) and delta requirements shall be in accordance with the applicable steps of table II herein.

4.4.2.1 Group B inspection, table IVa (JANS) of MIL-S-19500.

Subgroup	Method	Condition
B4	1037	2N3498, 2N3498L, 2N3499, 2N3499L - V_{CE} = 10 V dc; 2N3500, 2N3500L, 2N3501, 2N3501L - V_{CE} = 15 V dc; P_T = 1.0 W at T_A = 30°C ±5°C; t_{on} = t_{off} = 3 minutes minimum for 2,000 cycles. No heat sink or forced-air cooling on devices shall be permitted.
B5	1027	V_{CB} = 10 V dc; T_A = 125°C ± 25°C for 96 hours, P_T = 1 W at T_A = 100°C or adjusted as required by the chosen T_A to give an average lot T_J = 275°C.
B5	2037	(Al-Au die-interconnect only) test condition A.

Source: https://assist.dla.mil -- Downloaded: 2016-12-04T05:17Z
Check the source to verify that this is the current version before use.

4.4.2.2 Group B inspection, table IVb (JANTX and JANTXV) of MIL-S-19500.

Subgroup	Method	Condition
B3	1027	2N3498, 2N3498L, 2N3499, 2N3499L: V_{CB} = 75 V dc; 2N3500, 2N3500L, 2N3501, 2N3501L: V_{CB} = 100 V dc; P_T = 1.0 W; T_A = 30°C ± 5°C. No heat sink or forced-air cooling on the devices shall be permitted.
B5	3131	See 4.5.2.

4.4.4 Group C inspection. Group C inspection shall be conducted in accordance with the conditions specified for subgroup testing in table V of MIL-S-19500. Electrical measurements (end-points) and delta requirements shall be in accordance with the applicable steps of table II herein.

Subgroup	Method	Condition
C2	2036	Test condition E.
C6	1026	2N3498, 2N3498L, 2N3499, 2N3499L: V_{CB} = 75 V dc; 2N3500, 2N3500L, 2N3501, 2N3501L: V_{CB} = 100 V dc; P_T = 1.0 W; T_A = 30°C ± 5°C. No heat sink or forced-air cooling on the devices shall be permitted.

4.5 Method of inspection. Methods of inspection shall be as specified in the appropriate tables and as follows.

4.5.1 Pulse measurements. Conditions for pulse measurement shall be as specified in section 4 of MIL-STD-750.

4.5.2 Thermal resistance. Thermal resistance measurements shall be conducted in accordance with method 3131 of MIL-STD-750. The following conditions shall apply:

a. Collector current magnitude during heating shall be 30 mA dc.

b. Collector emitter voltage magnitude shall be 20 V dc.

c. Reference temperature measuring point shall be case ambient air.

d. Reference point temperature shall be 25°C.

e. Mounting arrangement shall be case to ambient air.

f. Maximum limit shall be $R_{\theta JA}$ = 175°C/W.

Source: https://assist.dla.mil -- Downloaded: 2016-12-04T05:17Z
Check the source to verify that this is the current version before use.

TABLE I. Group A inspection. 1/

Inspection 2/	MIL-STD-750 Method	MIL-STD-750 Conditions	Symbol	Limit Min	Limit Max	Unit
Subgroup 1						
Visual and mechanical examination	2071					
Subgroup 2						
Breakdown voltage, collector to base	3001	Bias condition D; I_C = 10 μA dc	$V_{(BR)CBO}$			
2N3498, 2N3499				100		V dc
2N3500, 2N3501				150		V dc
Breakdown voltage, collector to emitter	3011	Bias condition D; I_C = 10 mA dc; pulsed (see 4.5.1)	$V_{(BR)CEO}$			
2N3498, 2N3499				100		V dc
2N3500, 2N3501				150		V dc
Breakdown voltage, emitter to base	3026	Bias condition D; I_E = 10 μA dc	$V_{(BR)EBO}$	6		V dc
Collector to base cutoff current	3036	Bias condition D;	I_{CBO1}			
2N3498, 2N3499		V_{CB} = 50 V dc			50	nA dc
2N3500, 2N3501		V_{CB} = 75 V dc			50	nA dc
Emitter to base cutoff current	3061	Bias condition D; V_{EB} = 4 V dc	I_{EBO}		25	nA dc
Collector to emitter saturation voltage	3071	I_C = 10 mA dc; I_B = 1 mA dc; pulsed (see 4.5.1)	$V_{CE(sat)1}$ 3/		0.2	V dc
Collector to emitter saturation voltage	3071	I_C = 150 mA dc; I_B = 15 mA dc; pulsed (see 4.5.1)	$V_{CE(sat)2}$ 3/		0.4	V dc
2N3500, 2N3501 only						
Collector to emitter saturation voltage	3071	I_C = 150 mA dc; I_B = 15 mA dc; pulsed (see 4.5.1)	$V_{CE(sat)3}$ 3/		0.6	V dc
2N3498, 2N3499 only						
Base emitter saturation voltage	3066	Test condition A; I_C = 10 mA dc; I_B = 1 mA dc; pulsed (see 4.5.1)	$V_{BE(sat)1}$ 3/		0.8	V dc

See footnotes at end of table.

Source: https://assist.dla.mil -- Downloaded: 2016-12-04T05:17Z
Check the source to verify that this is the current version before use.

TABLE I. Group A inspection 1/ - Continued.

Inspection 2/	MIL-STD-750		Symbol	Limit		Unit
	Method	Conditions		Min	Max	
Subgroup 2 - Continued						
Base emitter saturation voltage 2N3500, 2N3501 only	3066	Test condition A; I_C = 150 mA dc; I_B = 15 mA dc; pulsed (see 4.5.1)	$V_{BE(sat)2}$ 3/		1.2	V dc
Base emitter saturation voltage 2N3498, 2N3499 only	3066	Test condition A; I_C = 300 mA dc; I_B = 30 mA dc; pulsed (see 4.5.1)	$V_{BE(sat)3}$ 3/		1.4	V dc
Forward-current transfer ratio	3076	V_{CE} = 10 V dc; I_C = 0.1 mA dc; pulsed (see 4.5.1)	h_{FE1}			
2N3498, 2N3499				20		
2N3500, 2N3501				35		
Forward-current transfer ratio	3076	V_{CE} = 10 V dc; I_C = 1.0 mA dc; pulsed (see 4.5.1)	h_{FE2}			
2N3498, 2N3499				25		
2N3500, 2N3501				50		
Forward-current transfer ratio	3076	V_{CE} = 10 V dc; I_C = 10 mA dc; pulsed (see 4.5.1)	h_{FE3}			
2N3498, 2N3499				35		
2N3500, 2N3501				75		
Forward-current transfer ratio	3076	V_{CE} = 10 V dc; I_C = 150 mA dc; pulsed (see 4.5.1)	h_{FE4}			
2N3498, 2N3499				40	120	
2N3500, 2N3501				100	300	
Forward-current transfer ratio	3076	V_{CE} = 10 V dc; I_C = 300 mA dc; pulsed (see 4.5.1)	h_{FE5}			
2N3500				15		
2N3501				20		
Forward-current transfer ratio	3076	V_{CE} = 10 V dc; I_C = 500 mA dc; pulsed (see 4.5.1)	h_{FE6}			
2N3498				15		
2N3499				20		

See footnotes at end of table.

Source: https://assist.dla.mil -- Downloaded: 2016-12-04T05:17Z
Check the source to verify that this is the current version before use.

TABLE I. Group A inspection 1/ - Continued.

Inspection 2/	MIL-STD-750		Symbol	Limit		Unit
	Method	Conditions		Min	Max	
Subgroup 3						
High temperature operation:		T_A = +150°C				
Collector to base cutoff current	3036	Bias condition D;	I_{CBO2}		50	µA dc
2N3498, 2N3499		V_{CB} = 50 V dc				
2N3500, 2N3501		V_{CB} = 75 V dc				
Low temperature operation:		T_A = -55°C				
Forward-current transfer ratio	3076	V_{CE} = 10 V dc; I_C = 150 mA dc; pulsed (see 4.5.1)	h_{FE7}			
2N3498, 2N3499				22		
2N3500, 2N3501				45		
Subgroup 4						
Magnitude of common emitter small-signal short-circuit forward current transfer ratio	3306	V_{CE} = 20 V dc; I_C = 20 mA dc; f = 100 MHz	$\|h_{fe}\|$	1.5	8	
Small-signal short-circuit forward-current transfer ratio	3206	V_{CE} = 10 V dc; I_C = 10 mA dc; f = 1 kHz	h_{fe}			
2N3498, 2N3499				50	300	
2N3500, 2N3501				75	375	
Open circuit output capacitance	3236	V_{CB} = 10 V dc; I_E = 0; 100 kHz ≤ f ≤ 1 MHz	C_{obo}			
2N3498, 2N3499					10	pF
2N3500, 2N3501					8	pF
Input capacitance (output open-circuited)	3240	V_{EB} = 0.5 V dc; I_C = 0; 100 kHz ≤ f ≤ 1 MHz	C_{ibo}		80	pF
Noise figure (test 1)	3246	V_{CE} = 10 V dc; I_C = 0.5 mA dc; Rg = 1 kΩ; f = 1 kHz	NF		16	dB
Noise figure (test 2)	3246	V_{CE} = 10 V dc; I_C = 0.5 mA dc; Rg = 1 kΩ; f = 10 kHz	NF		6	dB

See footnotes at end of table.

Source: https://assist.dla.mil -- Downloaded: 2016-12-04T05:17Z
Check the source to verify that this is the current version before use.

TABLE I. Group A inspection 1/ - Continued.

Inspection 2/	MIL-STD-750		Symbol	Limit		Unit
	Method	Conditions		Min	Max	
Subgroup 4 - Continued						
Turn-on time		V_{EB} = 12 V dc; I_C = 150 mA dc; I_{B1} = 15 mA dc; (see figure 2)	t_{on}		115	ns
Turn-off time		I_C = 150 mA dc; I_{B1} = I_{B2} = -15 mA dc; (see figure 2)	t_{off}		1150	ns
Subgroup 5						
Safe operating area (continuous dc)	3051	T_C = 25°C; t_r ≥ 10 ns; 1 cycle; (see figure 3) t = 1 sec.				
Test 1						
2N3498, 2N3499		V_{CE} = 10 V dc; I_C = 500 mA dc				
2N3500, 2N3501		V_{CE} = 16.67 V dc; I_C = 300 mA dc				
Test 2		V_{CE} = 40 V dc; I_C = 125 mA dc				
Test 3		V_{CE} = 80 V dc; I_C = 60 mA dc				
Safe operating area (clamped switching	3053	T_A = 25°C; (see figure 4); device fails if clamp voltage is not reached				
2N3498, 2N3499		I_B = 85 mA dc; I_C = 500 mA dc				
2N3500, 2N3501		I_B = 50 mA dc; I_C = 300 mA dc				
Electrical measurements		See table II steps 1 and 7.				
Subgroups 6 and 7						
Not Applicable						

1/ For sampling plan see MIL-S-19500.
2/ Electrical characteristics for "L" suffix devices are identical to the corresponding "non L" suffix devices.
3/ Maximum limit for this test characterized at ≤ .125 inch (3.18 mm) from the case.

Source: https://assist.dla.mil -- Downloaded: 2016-12-04T05:17Z
Check the source to verify that this is the current version before use.

TABLE II. Group B and C electrical measurements. 1/ 2/ 3/

Step	Inspection 4/	MIL-STD-750 Method	MIL-STD-750 Conditions	Symbol	Limit Min	Limit Max	Unit
1.	Collector to base cutoff current	3036	Bias condition D;	I_{CBO1}		50	nA dc
	2N3498, 2N3499		V_{CB} = 50 V dc				
	2N3500, 2N3501		V_{CB} = 75 V dc				
2.	Collector to base cutoff current	3036	Bias condition D;	I_{CBO1}		100	nA dc
	2N3498, 2N3499		V_{CB} = 50 V dc				
	2N3500, 2N3501		V_{CB} = 75 V dc				
3.	Emitter to base cutoff current	3061	Bias condition D; V_{EB} = 4 V dc	I_{EBO}		25	nA dc
4.	Collector to emitter voltage (saturated)	3071	I_C = 10 mA dc; I_B = 1.0 mA dc pulsed (see 4.5.1)	$V_{CE(sat)1}$ 5/		0.2	V dc
5.	Base to emitter voltage (saturated)	3066	Test condition A I_C = 10 mA dc; I_B = 1.0 mA dc pulsed (see 4.5.1)	$V_{BE(sat)1}$ 5/		0.8	V dc
6.	Forward-current transfer ratio	3076	V_{CE} = 10 V dc; I_C = 10 mA dc	h_{FE3}			
	2N3498, 2N3499				35		
	2N3500, 2N3501				75		
7.	Forward-current transfer ratio	3076	V_{CE} = 10 V dc; I_C = 150 mA dc pulsed (see 4.5.1)	h_{FE4}			
	2N3498, 2N3499				40	120	
	2N3500, 2N3501				100	300	
8.	Collector to base cutoff current	3036	Bias condition D;	ΔI_{CBO1} 6/	±100% of initial value or 5 nA dc whichever is greater		
	2N3498, 2N3499		V_{CB} = 50 V dc				
	2N3500, 2N3501		V_{CB} = 75 V dc				
9.	Forward-current transfer ratio	3076	V_{CE} = 10 V dc; I_C = 10 mA dc pulsed (see 4.5.1)	Δh_{FE3} 6/	±25% change from initial reading		
10.	Forward-current transfer ratio	3076	V_{CE} = 10 V dc; I_C = 150 mA dc pulsed (see 4.5.1)	Δh_{FE4} 6/	±25% change from initial reading		
11.	Collector to emitter voltage (saturated)	3071	I_C = 10 mA dc; I_B = 1.0 mA dc pulsed (see 4.5.1)	$\Delta V_{CE(sat)1}$ 5/ 6/	±50 mV dc change from previous measured value		

See footnotes at end of table.

Source: https://assist.dla.mil -- Downloaded: 2016-12-04T05:17Z
Check the source to verify that this is the current version before use.

TABLE II. Group B and C electrical measurements 1/ 2/ 3/ - Continued.

1/ The electrical measurements for table IVa (JANS) of MIL-S-19500 are as follows:

a. Subgroup 3, see table II herein, steps 1, 3, 4, 5, 6, and 7.

b. Subgroup 4, see table II herein, steps 2, 3, 4, 5, 6, 7, 10, and 11.

c. Subgroup 5, see table II herein, steps 2, 3, 4, 5, 6, 7, 8, and 9.

2/ The electrical measurements for table IVb (JAN, JANTX, and JANTXV) of MIL-S-19500 are as follows:

a. Subgroup 2, see table II herein, steps 1 and 7.

b. Subgroups 3 and 6, see table II herein, steps 2, 7, and 10.

3/ The electrical measurements for table V of MIL-S-19500 are as follows:

a. Subgroups 2 and 3, see table II herein, steps 1, 3, 6, and 7 (JANS); steps 1 and 7 (JAN, JANTX, and JANTXV).

b. Subgroup 6, see table II herein, steps 2, 3, 6, 7, and 8 (JANS); steps 2, 7, and 10 (JAN, JANTX, and JANTXV).

4/ Electrical characteristics for "L" suffix devices are identical to their corresponding "non L" suffix devices.

5/ Maximum limit for this test characterized at ≤ .125 inch (3.18 mm) from the case.

6/ Devices which exceed the group A limits shall not be returned to the lot, but will not be considered failures.

Source: https://assist.dla.mil -- Downloaded: 2016-12-04T05:17Z
Check the source to verify that this is the current version before use.

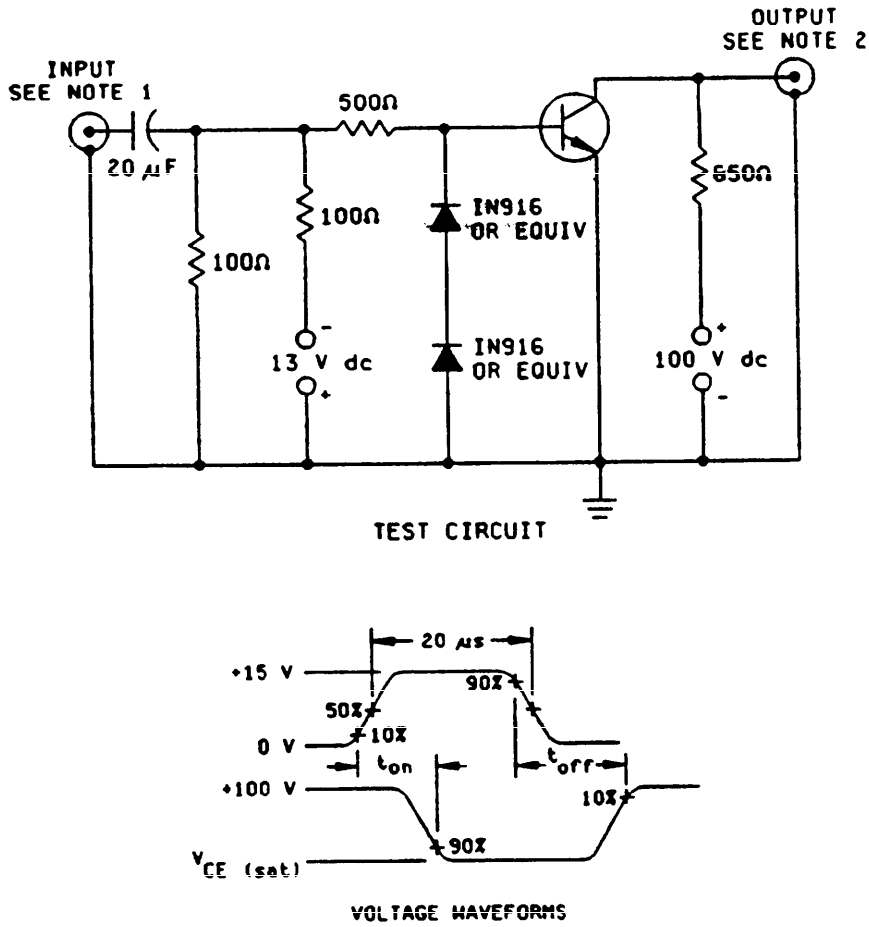

NOTES:

1. The input waveform is supplied by a pulse generator with the following characteristics: Pulse width = 20 μs, Pulse repetition rate = 1 kHz, rise time (t_r) and fall time (t_f) ≤ 10 ns, duty cycle ≤ 2%.
2. The output waveform is monitored on a sampling oscilloscope with Z_{in} ≥ 1 MΩ and t_r ≤ 1 ns.

FIGURE 2. Turn-on turn-off switching time test circuit.

Source: https://assist.dla.mil -- Downloaded: 2016-12-04T05:17Z
Check the source to verify that this is the current version before use.

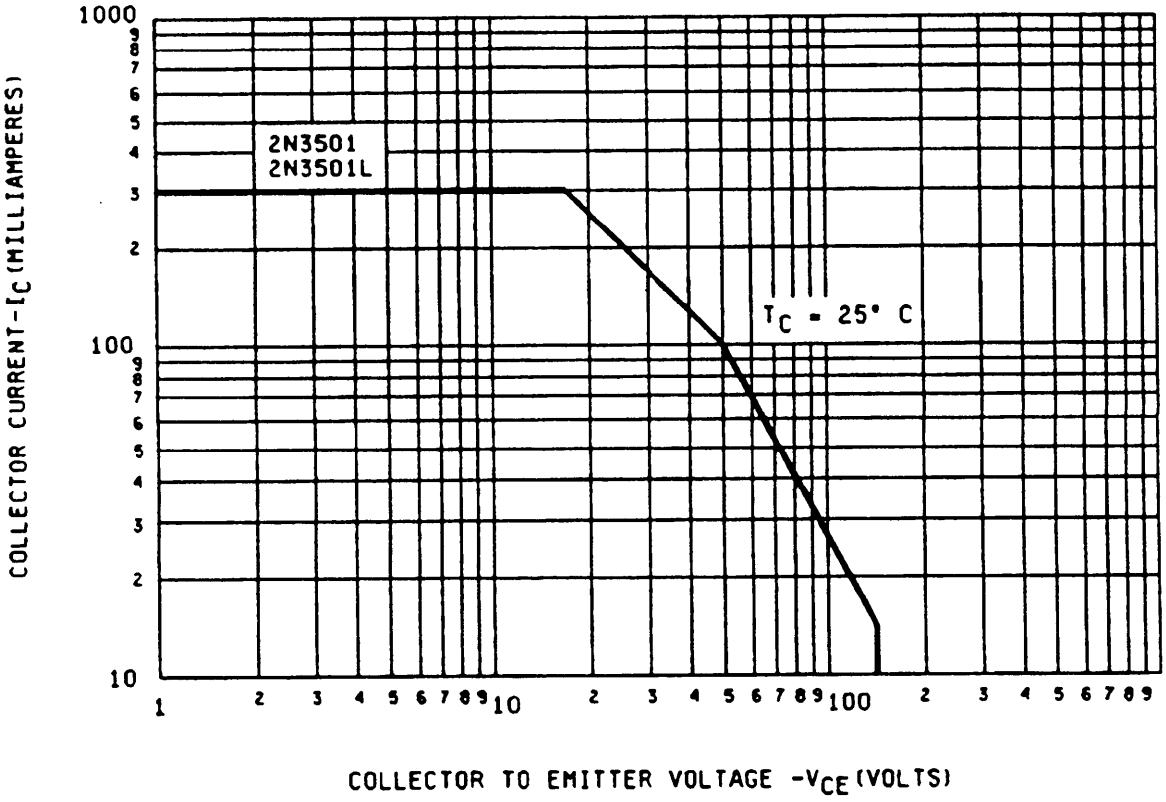

FIGURE 3. Maximum safe operating area.

Source: https://assist.dla.mil -- Downloaded: 2016-12-04T05:17Z
Check the source to verify that this is the current version before use.

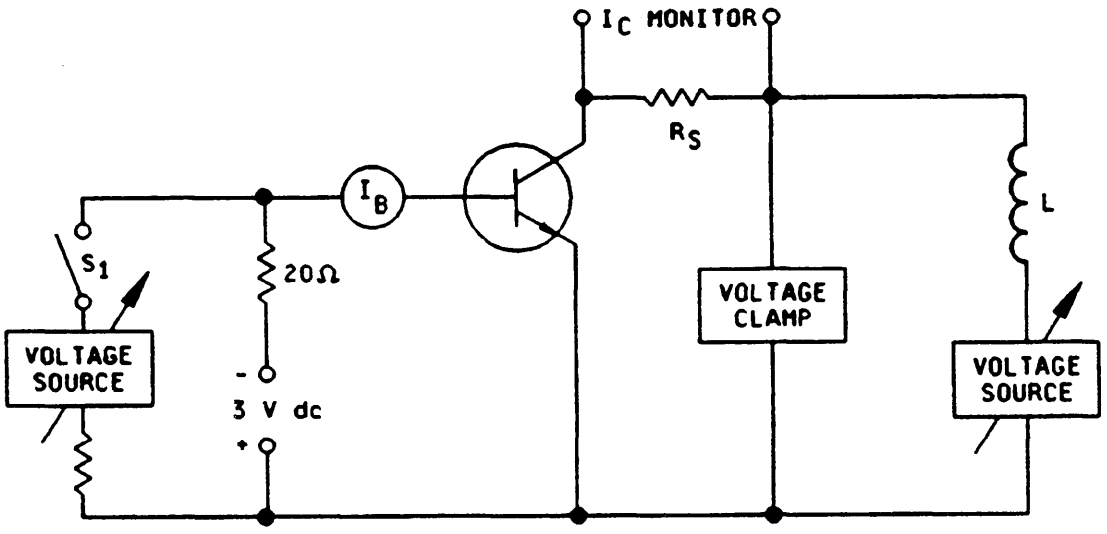

Voltage clamp:

2N3498, 2N3498L, 2N3499, 2N3499L = 100 V dc
2N3500, 2N3500L, 2N3501, 2N3501L = 150 V dc

R_S ≤ 1.0 ohm (noninductive)
L = 13.3 mH (STANCOR C-2688, 0.425 ohm, or equivalent)

Procedure:
1. With switch S_1 closed, set the specified test conditions.
2. Open S_1.
3. Perform specified end-point tests.

FIGURE 4. Clamped inductive sweep test circuit diagram.

Source: https://assist.dla.mil -- Downloaded: 2016-12-04T05:17Z
Check the source to verify that this is the current version before use.

5. PACKAGING

5.1 Packaging requirements. The requirements for packaging shall be in accordance with MIL-S-19500.

6. NOTES

(This section contains information of a general or explanatory nature that may be helpful, but is not mandatory.)

6.1 Notes. The notes specified in MIL-S-19500 are applicable to this specification.

6.2 Acquisition requirements. Acquisition documents should specify the following:

a. Issue of DODISS to be cited in the solicitation.

b. Lead finish (see 3.3.1).

c. Product assurance level and type designator.

6.3 Substitutability. The 2N3498, 2N3499 and 2N3500 devices (including "L" suffix versions) are now inactive for new design. The 2N3501 is the preferred item and is a direct substitute for the 2N3499, however, due to the higher gain of the 2N3501, it should be evaluated on a case by case basis before it is substituted for the 2N3498 and 2N3500.

6.4 Changes from previous issue. Marginal notations are not used in this revision to identify changes with respect to the previous issue due to the extensiveness of the changes.

CONCLUDING MATERIAL

Custodians:
Army - ER
Navy - EC
Air Force - 17

Review activities:
Army - AR, MI, SM
Navy - AS, CG, MC
Air Force - 19, 85
DLA - ES

Preparing activity:
Army - ER

Agent:
DLA - ES

(Project 5961-1720)

Source: https://assist.dla.mil -- Downloaded: 2016-12-04T05:17Z
Check the source to verify that this is the current version before use.

STANDARDIZATION DOCUMENT IMPROVEMENT PROPOSAL

INSTRUCTIONS

1. The preparing activity must complete blocks 1, 2, 3, and 8. In block 1, both the document number and revision letter should be given.

2. The submitter of this form must complete blocks 4, 5, 6, and 7.

3. The preparing activity must provide a reply within 30 days from receipt of the form.

NOTE: This form may not be used to request copies of documents, nor to request waivers, or clarification of requirements on current contracts. Comments submitted on this form do not constitute or imply authorization to waive any portion of the referenced document(s) or to amend contractual requirements.

I RECOMMEND A CHANGE:

1. DOCUMENT NUMBER
MIL-S-19500/366D

2. DOCUMENT DATE (YYMMDD)
950414

3. DOCUMENT TITLE SEMICONDUCTOR DEVICE, TRANSISTOR, NPN, SILICON, AMPLIFIER TYPES 2N3498, 2N3498L, 2N3499, 2N3499L, 2N3500, 2N3500L, 2N3501 and 2N3501L JAN, JANTX, JANTXV, AND JANS

4. NATURE OF CHANGE (Identify paragraph number and include proposed rewrite, if possible. Attach extra sheets as needed.)

5. REASON FOR RECOMMENDATION

6. SUBMITTER

a. NAME (Last, First, Middle Initial)	b. ORGANIZATION	
c. ADDRESS (Include Zip Code)	d. TELEPHONE (Include Area Code) (1) Commercial (2) AUTOVON (If applicable)	e. DATE SUBMITTED YYMMDD

8. PREPARING ACTIVITY

a. NAME	b. TELEPHONE (Include Area Code)
DIRECTOR, US ARMY RESEARCH LAB/PSD	(1) Commercial 908-427-3441/3148 (2) AUTOVON 987-3441/3148
c. ADDRESS (Include Zip Code) ATTN: AMSRL-PS-DC FORT MONMOUTH, NJ 07703-5601	IF YOU DO NOT RECEIVE A REPLY WITHIN 45 DAYS, CONTACT: Defense Quality and Standardization Office 5203 Leesburg Pike, Suite 1403, Falls Church, VA 22041-3466 Telephone (703) 756-2340 AUTOVON 289-2340

DD Form 1426, OCT 89 Previous editions are obsolete 98/290

Source: https://assist.dla.mil -- Downloaded: 2016-12-04T05:17Z
Check the source to verify that this is the current version before use.