Inch-Pound

MIL-HDBK-304C

1 June 1997

SUPERSEDING

MIL-HDBK-304B

31 October 1978

DEPARTMENT OF DEFENSE HANDBOOK

PACKAGE CUSHIONING DESIGN

This handbook is for guidance only. Do not cite this document as a requirement.

AMSC N/A AREA PACK

DISTRIBUTION STATEMENT A. Approved for public release; distribution is unlimited.

Source: https://assist.dla.mil -- Downloaded: 2016-12-05T12:15Z
Check the source to verify that this is the current version before use.

FOREWORD

1. This handbook is approved for use by all Departments and Agencies of the Department of Defense (DOD).

2. This handbook is for guidance only. This handbook cannot be cited as a requirement. If it is, the contractor does not have to comply.

3. This document provides basic and fundamental information on cushioning materials and their uses. It will provide valuable information and guidance to engineering and technical personnel concerned with designing cushioning systems and specifying required cushioning for protecting fragile equipment.

4. Military Handbook 304C contains many changes from the last revision.
-- This version contains both English and metric units.
-- The sections have been arranged according to a six-step design approach shown in Table III.
-- The previous version's Section 5 has been deleted (MIL-C-26861- Ramifications in Cushioning Design).
-- Graphical data is now available in electronic format.
-- Figures have been moved into the text.
-- Equipment photographs have been added.
-- This revision reflects the changes to the Cushion Design Computer Program now called "Package Designer".
-- This document complies with the DOD Acquisition Reform Initiatives.

5. General requirements, theories, illustrations, example problems, cushioning techniques and testing procedures are presented in Sections 4-10.

6. The graphical data is available in electronic format from the Air Force Packaging Technology and Engineering Facility for Appendix A (Stress-Strain Curves), Appendix B (Peak Acceleration-Static Stress Curves) and Appendix C (Transmissibility-Frequency Curves). See the appendices for further information.

7. Appendix D contains a bibliography of other documents which are referenced in this handbook. These documents provide an in-depth background to the topics listed in this handbook. Parenthetical numbering, such as **(3), (12),** etc., placed throughout the text will be used to reference literature in Appendix D. Appendix E contains an index based on key words throughout the document.

8. Beneficial comments (recommendations, additions, deletions) and any pertinent data which may be of use in improving this document should be addressed to Air Force Packaging Technology and Engineering Facility, AFMC LSO/LOP, 5215 Thurlow Street, Wright-Patterson Air Force Base OH 45433-5540 or by using the self-addressed Standardization Document Improvement Proposal (DD Form 1426) appearing at the end of this document or by letter.

Source: https://assist.dla.mil -- Downloaded: 2016-12-05T12:15Z
Check the source to verify that this is the current version before use.

CONTENTS

PARAGRAPH		PAGE
	Foreword	ii
	Table of Contents	iii
	List of Appendices	vi
	List of Tables	vi
	List of Figures	vii
	Unit Abbreviations and Metric Equivalents	ix
1.0	**Introduction**	**1**
1.1	Purpose	1
1.2	Scope	1
1.3	Objective	1
2.0	**Applicable Documents**	3
2.1	General	3
2.2	Government documents	3
2.2.1	Specifications, standards, and handbooks	3
2.3	Non-Government standards and other publications	4
2.3.1	Other Publications	4
2.4	Order of Precedence	5
3.0	**Definitions**	**6**
	3.1 through 3.72 -- Definitions	6
4.0	**Define Environments**	**10**
4.1	Introduction	10
4.2	Rough Handling Considerations	10
4.3	Levels of Protection	10
4.3.1	Level A	10
4.3.2	Level B	10
4.4	Shock	10
4.4.1	Shock Spectrum	12
4.4.2	Intensity of Shocks	12
4.4.3	Drop Heights and Handling Effects	13
4.5	Vibration Caused by Shipment	14
4.5.1	Railway	14
4.5.2	Truck	14
4.5.3	Aircraft	16
4.5.4	Ship	17
5.0	**Determine Item Characteristics**	**18**
5.1	Cushioning Characteristics	18
5.2	Item Fragility	18
5.2.1	Fragility Assessment	19
5.2.2	Product Improvement Feedback	21
5.3	Shock Isolation Cush. System	22
5.3.1	Shock Isolation	22
5.3.2	Shock Isolation Considerations	22

Source: https://assist.dla.mil -- Downloaded: 2016-12-05T12:15Z
Check the source to verify that this is the current version before use.

5.3.3	Shock Background	22
5.4	Shock Absorption Capability	24
5.4.1	Peak Accel.-Static Stress Curves	24
5.4.2	Environmental Effects on Static Stress Curves	25
5.5	Vibration Isolation Cush. System	26
5.5.1	Vibration Isolation Considerations	26
5.5.2	Vibration Background	26
5.5.3	Vibration Transmissibility	28
5.5.4	Natural Frequency Calculations	28
5.5.5	Transmissibility Curve Dev.	30
5.6	Density	32
5.7	Cost	32
5.8	Recoverability (Compression Set)	34
5.8.1	Static Comp. Force-Displacement	35
5.8.2	Creep	36
5.9	Tensile Strength and Flexibility	37
5.10	Dusting and Fragmentation	37
5.11	Corrosion Prevention	37
5.12	Hydrolytic Stability	38
5.13	Abrasive Qualities	38
5.14	Fungus Resistance	38
6.0	**Application Techniques**	**39**
6.1	Shock Design Procedure	39
6.1.1	Make Initial Estimate	39
6.1.2	Material Identification	41
6.1.3	Select Cush. Application Method	41
6.1.4	Check for Buckling	41
6.2	Vibration Design Procedure	42
6.2.1	Example	42
6.3	Cushioning Applic. Techniques	43
6.3.1	Common Applic. Techniques	43
6.3.2	Area Adjustment Techniques	44
6.4	Application of Dunnage	49
6.4.1	Filling Voids	49
6.4.2	Padding Projections	49
6.5	Misc. Application Techniques	49
6.5.1	Nesting Items	49
6.5.2	Disassembly of Lrg, Fragile Items	49
6.5.3	Abrasion Prevention	50
6.5.4	Cushioned Bases or Pallets	50
6.5.5	Foam-in-Place	50
7.0	**Cushioning Design Procedures**	**52**
7.1	Summary	52
7.2	Comprehensive Sample Problem	52
7.3	Cushion Design by Computer	53
7.3.1	Reason for Program	54
7.3.2	“Package Designer” Ordering Data	54
7.3.3	Cushion Design Program	54

Source: https://assist.dla.mil -- Downloaded: 2016-12-05T12:15Z
Check the source to verify that this is the current version before use.

8.0	**Container/Cushion System Test Procedures**	**58**
8.1	Instrumented Drop/Vibration Tests	58
8.1.1	Rebound Effects	58
8.1.2	Corner Crushing/Side Buckling	58
8.1.3	Pneumatic Frictional Effects	59
8.2	Impact Testing	59
8.2.1	Scope	59
8.2.2	Outline of Test Method	60
8.2.3	Measurement of Displacement	60
8.2.4	Accelerometer Mounting	61
8.2.5	Simulated Test Items	62
8.2.6	Orientation and Numbering of Package and Item	62
8.2.7	Instrumentation Requirements	63
8.2.8	Analysis of Data	63
8.3	General Principles of Instrumentation for Shock Measurement	65
8.3.1	Frequency Response Rqmts.	65
8.3.2	Transducers and Signal Conditioning Equipment	65
8.3.3	Recording Devices	68
8.3.4	Calibration	69
8.3.5	Summary	69
9.0	**Cushioning Material Test Procedures and Apparatus**	**70**
9.1	Determination of Cushioning Material Characteristics	70
9.1.1	Sample Preparation	70
9.1.2	Measuring Dimensions	71
9.1.3	Density	71
9.1.4	Moisture Content	73
9.1.5	Dynamic Compression	73
9.1.6	Vibration Transmissibility	77
9.1.7	Abrasion	77
9.1.8	Creep	78
9.1.9	Static-Compressive Force Displacement	78
9.1.10	Tensile Strength	81
9.1.11	Fragmentation	81
9.1.12	Fungus Resistance	81
9.1.13	Hydrolytic Stability	81
9.1.14	Flexibility	82
9.1.15	Contact Corrosivity Test	82
9.1.16	Preworking	83
9.1.17	Fragility Testing	83
10.0	**Notes**	**85**
10.1	Intended Use	85
10.2	Subject term (key word) listing	85
10.3	Identification of changes	85

Source: https://assist.dla.mil -- Downloaded: 2016-12-05T12:15Z
Check the source to verify that this is the current version before use.

LISTING OF APPENDICES

Appendix A	Stress-Strain Curves	86
Appendix B	Peak Acceleration - Static Stress Curves	87
Appendix C	Transmissibility - Frequency Curves	88
Appendix D	Bibliography	89
Appendix E	Index	91

LISTING OF TABLES

Table I.	Unit Abbreviations	ix
Table II.	English/Metric Abbreviations	ix
Table III.	Container Development Procedure	2
Table IV.	Drop Height/Assurance Levels	13
Table V.	Typical Fragility Ratings	20
Table VI.	Foam Minimum "Safe Temperatures"	26
Table VII.	Cushioning Cost Index	33
Table VIII.	Material Listing with Identification Numbers	41
Table IX.	Analysis of Best Materials	53

Source: https://assist.dla.mil -- Downloaded: 2016-12-05T12:15Z
Check the source to verify that this is the current version before use.

LISTING OF FIGURES

Figure		Page
	Section 4	
4-1	Some Shock-producing Shipping Practices.	11
4-2A	Shock Pulse Types.	12
4-2B	Basic Parameters of a Shock Pulse.	12
4-3	Frequency Spectra, Railroad, Vertical Direction, Composite of Various Conditions.	15
4-4	Frequency Spectra, Tractor - Semi-loaded Vertical Direction, Composite of Various Road Types and Road Speeds.	15
4-5	Frequency Spectra, Tractor - Trailer Van Air-ride Suspension, Vertical Direction.	16
4-6	Aircraft Acceleration Envelope Composite (Propeller, Helicopter, Jet).	16
4-7	Frequency Spectra, C-130 Aircraft Takeoff, Vertical Direction.	17
4-8	Ship Acceleration Envelope - Composites	17
	Section 5	
5-1	Amplification factors for linear damped system.	18
5-2	Damage Boundary Curve	20
5-3	Idealized Mechanical System Representing a Falling Package that Contains a Cushioned Item.	23
5-4	Acceleration-time pulse showing shock wave effects.	24
5-5	A Typical Set of Peak Acceleration-Static Stress Curves	25
5-6	Idealized item-cushioning system bearing on a vibrating foundation.	25
5-7	Force-displacement curves for various types of cushions.	27
5-8	Sample Transmissibility Curve for Polyurethane Foam (Ether).	28
5-9	Effects of damping on the transmissibility curve for the viscous-damped linear cushioning system depicted in Figure 5-6.	30
5-10	Static compressive stress-strain curve for a hypothetical cushioning material.	31
5-11	Vibration Transmissibility Test Setup	31
5-12	Amplification / Attenuation Curve and Transmissibility at 3.0 PSI	32
5-13	Effects of looseness on a package.	35
	Section 6	
6-1	A Typical Set of Peak-Acceleration / Static Stress Curves	39
6-2	Corner pads according to the problem.	40
6-3	Columnar buckling of cushion.	42
6-4	Sample Transmissibility Curve for Polyurethane Foam (Ether).	43
6-5	Common Cushioning Application Techniques. **A**, Complete Encapsulation, **B**, Corner Pads	44
6-6	Load Spreaders used to increase the bearing area of an item against cushions.	44
6-7	Convoluted material used to decrease bearing area.	45
6-8	Cushioning of an item with projections.	45
6-9	Use of precut pad to float an irregularly shaped item.	46
6-10	Use of molded pads.	46
6-11	Use of folded die-cut corrugated fiberboard to immobilize item.	47
6-12	Use of molded or cut rigid material to immobilize item.	47
6-13	Use of corrugated fiberboard blocking to immobilize items.	48
6-14	Use of corrugated fiberboard blocking and wood anchoring base to immobilize item.	48
6-15	Use of a combination of materials to immobilize and cushion item.	49
6-16	Nesting items in cushioning material.	50
6-17	A cushioned base.	51

Source: https://assist.dla.mil -- Downloaded: 2016-12-05T12:15Z
Check the source to verify that this is the current version before use.

LISTING OF FIGURES (Continued)

Figure	Section 7	Page
7-1	Complete Encapsulation Computer Analysis	56
7-2	Cornerpad Computer Analysis	57
	Section 8	
8-1	Container rebound immediately after collision with a rigid surface.	58
8-2	Buckling of side during impact of heavily loaded flexible container.	59
8-3	Container drop tester.	60
8-4	Vector diagram and cosine table indicating effects of accelerometer misalignment.	61
8-5	Recommended tri-axial accelerometer mounting technique.	62
8-6	Accelerometer mounting technique for commonly used simulated test items.	63
8-7	Diagrammatic sketch of tri-axial recording system.	64
8-8	Sample data analysis computation sheet for one instrumented container drop test.	64
8-9	Typical recording system employing a strain gage accelerometer.	66
8-10	Negative "overshoot" on acceleration-time record obtained with a piezoelectric accelerometer.	67
8-11	Typical recording system employing a piezoelectric accelerometer.	68
	Section 9	
9-1	Apparatus for measuring the length and width of a cushion.	71
9-2	Equipment used to measure the thickness of a cushion.	72
9-3	Dynamic Cushion Tester	74
9-4	Acceleration-time curve showing distortion caused by shock-excited ringing of the loading head.	75
9-5	Acceleration-time pulse showing shock wave effects.	75
9-6	Creep test fixture.	79
9-7	Compression/Tension testing machine.	79
9-8	Programmable Shock Machine	84

Source: https://assist.dla.mil -- Downloaded: 2016-12-05T12:15Z
Check the source to verify that this is the current version before use.

UNIT ABBREVIATIONS AND METRIC EQUIVALENTS

Table I
Unit Abbreviations

Feet	ft
Frequency	Hz
Kilogram	Kg
Inch	in
Meter	m
Millimeter	mm
Newton	N
Pound	lb
Second	sec

Table II
English/Metric Equivalents

	English	Metric	English to Metric Conversion Factor
Acceleration	ft/sec^2	m/sec^2	0.305
Area	in^2	mm^2	645.2
Density	lb (mass)/ft^3	kg/m^3	16.02
Force	lb (force)	N or kg(m)/sec^2	4.448
Frequency	Hz	Hz	N/A
Length	inch	mm	25.4
Length	foot	meter	0.305
Stress/Pressure	lb (force)/in^2	kg/cm^2	0.07
Weight	lb (mass)	kg	0.454

Source: https://assist.dla.mil -- Downloaded: 2016-12-05T12:15Z
Check the source to verify that this is the current version before use.

1.0 INTRODUCTION

1.1 Purpose. The development of adequate cushioned packages for the vast quantity of Department of Defense (DOD) equipment and material is a challenging task, especially when you consider that this includes an extremely wide range of items. This range includes everything from small, fragile electronic instruments to bulky aircraft structures. The package designer must not only protect these items from the hazards they encounter in worldwide shipment, but they must also do it economically.

This handbook provides the user orderly, concise procedures for effective cushioning design for all package design applications. Of special help is the liberal use of illustrations that provide graphic depiction of key points and concepts.

The successful package designer utilizes not only these scientific design principles, but also a liberal amount of sound judgment and common sense. Therefore, this handbook includes discussions on both scientific and practical considerations.

1.2 Scope. This handbook is for guidance only. This handbook cannot be cited as a requirement. If it is, the contractor does not have to comply. The information in this handbook applies chiefly to conventional cushioning materials. These materials include polyurethane foam, foamed polystyrene, and foamed polyethylene, etc.

This document omits data on creep characteristics, and special cushioning devices. The graphical data for the Stress-Strain Curves (Appendix A), Peak Acceleration-Static Stress Curves (Appendix B) and Transmissibility-Frequency Curves (Appendix C) is available in electronic format from the Air Force Packaging Technology and Engineering Facility. See the appendices for further information.

Frequently, for brevity sake, this handbook excludes detailed background information on particular topics from the main text. However, Section 2.0 and Appendix D cite references that present these topics in much more detail.

This document's units of measurement are in both English and metric. The English unit is first. The reason the document is not totally metric is because the curves referenced in Appendix B are in English units. When the curves are changed to metric, this document will be totally converted to metric. See page ix for unit abbreviations and metric equivalents.

1.3 Objective. The objective of this handbook is the presentation of the various design concepts and ramifications in as simple a format as possible.

The container development process involves the steps listed in Table III. **(16)**

In other words, the package designer must consider the item, the container, and the distribution cycle as components of the overall system. Viewing each design project this way will help the package designer understand that each distribution method poses its own specific hazards. Once they identify these hazards, the package designer can then evaluate the item's resistance to them. The result is a package that protects the item from the hazards of anticipated transportation and storage conditions.

After consideration of the above, the package designer must provide a design that meets all of these parameters and does it as economically as possible. Of course this is relative to the value, number, and logistical importance of the item.

Source: https://assist.dla.mil -- Downloaded: 2016-12-05T12:15Z
Check the source to verify that this is the current version before use.

Step 1	**Define the Shipping, Handling, and Storage Environments**	**The shipping, handling and storage environments must be determined. With this information, the Preservation and Packing Levels are determined. They may be either be Military Packing Level A or Level B. (Section 4)**
Step 2	**Determine Item Characteristics**	**Determine dimensions, weight, fragility rating, number of items to be shipped, and any other special considerations. (Sections 5 and 9)**
Step 3	**Product Redesign**	**The weakest elements of the item may be modified to improve its durability. This can usually be done inexpensively if done during the item's design process. After redesign the item characteristics in Step 1 are recalculated.**
Step 4	**Design Cushioning System**	**Choosing the proper cushioning material and designing its configuration requires a knowledge of both item characteristics (Step 2) and drop height determined from the Packing Level in Step 1 and the weight from Step 2. (Sections 4, 6 and 7)**
Step 5	**Design the Package System**	**The inner size of the container is determined from the size of the item plus its cushioning. The container can be made of a variety of materials. The package designer chooses the one that fits best with the Packing Level determined in Step 1.**
Step 6	**Test the Package System**	**The prototype container is then subjected to shock and vibration tests. Test levels are derived from the Packing Level determination in Step 1. (Section 8)**

TABLE III. Container Development Procedure. (16)

Source: https://assist.dla.mil -- Downloaded: 2016-12-05T12:15Z
Check the source to verify that this is the current version before use.

2.0 APPLICABLE DOCUMENTS

2.1 General. The documents listed below are not necessarily all of the documents referenced herein, but are the ones needed to fully understand the information provided in this handbook. Appendix D contains a bibliography of references not included in this section.

2.2 Government documents.

2.2.1 Specifications, standards, and handbooks. The following specifications, standards, and handbooks form a part of this document to the extent specified herein. Unless otherwise specified, the issues of these documents are those listed in the latest issue of the Department of Defense Index of Specifications and Standards (DODISS) and supplement thereto.

SPECIFICATIONS

FEDERAL

PPP-C-795	Cushioning Material, Packaging (Flexible Closed Cell Plastic Film for Long Shipping Applications)
PPP-C-850	Cushioning Material, Polystyrene, Expanded, Resilient (For Packaging Uses)
PPP-C-1120	Cushioning Material, Uncompressed Bound Fiber for Packaging
PPP-B-1672	Boxes, Shipping, Reusable, with Cushioning
PPP-C-1752	Cushioning Material, Packaging, Polyethylene Foam
PPP-C-1797	Cushioning Material, Resilient, Low Density, Unicellular, Polypropylene Foam
PPP-C-1842	Cushioning Material, Flexible Open-Cell Plastic Film (For Packaging Applications)

DEPARTMENT OF DEFENSE

MIL-PRF-26514	Polyurethane Foam, Rigid or Flexible, for Packaging
MIL-PRF-83671	Foam-In-Place Packaging Materials, General Specification for

STANDARDS

FEDERAL

FED-STD-101	Federal Test Method Standard, Test Procedures for Packaging Materials

DEPARTMENT OF DEFENSE

MIL-STD-810	Environmental Test Methods and Engineering Guidelines

Source: https://assist.dla.mil -- Downloaded: 2016-12-05T12:15Z
Check the source to verify that this is the current version before use.

MIL-STD-1186 Standard Practice, Cushioning, Anchoring, Bracing, Blocking, and Waterproofing; with Appropriate Test Methods

MIL-STD-2073 Standard Practice for Military Packaging

(Unless otherwise indicated, copies of the above documents are available from the Standardization Document Order Desk, 700 Robbins Avenue, Building 4D, Philadelphia, PA 19111-5094.)

2.3 Non-Government standards and other publications. The following documents form a part of this document to the extent specified herein. Unless otherwise specified, the issues of the documents which are DOD adopted are those listed in the latest issue of the DODISS, and supplement thereto.

ASTM

ASTM C 421 - Standard Test Method for Tumbling Friability of Preformed Block-Type Thermal Insulation (DOD Adopted)

ASTM D 775 - Standard Test Method for Drop Test for Loaded Boxes

ASTM D 999 - Methods of Vibration Testing of Shipping Containers

ASTM D 1596 - Standard Test Method for Dynamic Shock Cushioning Characteristics of Packaging Material

ASTM D 1623 - Standard Test Method for Tensile and Tensile Adhesion Properties of Rigid Cellular Plastics (DOD Adopted)

ASTM D 2221 - Standard Test Method for Creep Properties of Package Cushioning Materials (DOD Adopted)

ASTM D 3332 - Standard Test Methods of Mechanical Shock Fragility of Products Using Shock Machines

ASTM D 4169 - Standard Practice for Performance Testing of Shipping Containers and Systems (DOD Adopted)

ASTM D 4442 - Standard Test Methods for Direct Moisture Content Measurement of Wood and Wood-Base Materials

ASTM D 4728 - Standard Test Method for Random Vibration Testing of Shipping Containers

ASTM D 5276 - Standard Test Method for Drop Test of Loaded Containers by Free Fall

ASTM G 21 - Standard Practice for Determining Resistance of Synthetic Polymeric Materials to Fungi (DOD Adopted)

(Application for copies should be addressed to ASTM, 1916 Race Street, Philadelphia, PA 19103-1187).

Source: https://assist.dla.mil -- Downloaded: 2016-12-05T12:15Z
Check the source to verify that this is the current version before use.

2.3.1 Other Publications. Appendix D contains a bibliography of other documents which are referenced in this handbook. These documents provide an in-depth background to the topics listed in this handbook. Parenthetical numbering, such as **(3), (12),** etc., placed throughout the text will be used to reference literature in Appendix D.

2.4 Order of Precedence. In the event of a conflict between the text of this document and the references cited herein, the text of this document takes precedence. Nothing in this document, however, supersedes applicable laws and regulations unless a specific exemption has been obtained.

Source: https://assist.dla.mil -- Downloaded: 2016-12-05T12:15Z
Check the source to verify that this is the current version before use.

3.0 DEFINITIONS

3.1 Acceleration. A vector quantity describing the time rate of change of velocity of a body in relation to a fixed reference point.

3.2 Amplification. As used in this document, the ratio of the peak acceleration response to an applied acceleration pulse.

3.3 Blocking. Relatively stiff materials used in packaging to immobilize items.

3.4 Compression set. The loss of cushion specimen thickness after a specified interval following removal of a compression load.

3.5 Container. As used in this document, any box, crate, can, or drum used as a unit pack to ship an item.

3.6 Container, exterior. As used in this document, the outermost container of a unit pack.

3.7 Container, interior pack. As used in this document, the container used internally in a unit pack.

3.8 Corrosion. The deterioration of a material by chemical action, usually as the result of oxidation, galvanic, acid, or alkali action. Corrosion can cause pitting or etching or the formation of loose or granular particles.

3.9 Creep. The strain-time response of a material to a constant stress or the dimensional change over time of a material under static load. Creep is expressed in percentage loss.

3.10 Cushioning. A material, as distinguished from a built-up device, used as to absorb the energy of shock and vibration through a gradual but increasing resistance to the movement of the item.

3.11 Cushioning Cost. A relative factor reflecting the cost elements of a particular cushioning material or system used in a specific application.

3.12 Cushioning, anomalous type. A cushioning material characterized by a force-displacement curve that does not correspond to any general type.

3.13 Cushioning, ideal type. A cushioning material that exerts a constant resistive force to variable material, displacement. Theoretically possible, but not attainable in practice.

3.14 Cushioning, tangent type. A cushioning material having a force-displacement curve that is linear material, at small values of displacement, but which increases non-linearly at tangent type higher values of displacement.

3.15 Damping. The dissipation of energy with time or distance.

3.16 Damping, critical. The minimum viscous damping that will allow a displaced system to return to its initial position without oscillation.

3.17 Damping ratio. The ratio of the system's critical damping to viscous damping. Viscous damping is the ratio of actual damping coefficient to the critical damping coefficient.

Source: https://assist.dla.mil -- Downloaded: 2016-12-05T12:15Z
Check the source to verify that this is the current version before use.

3.18 Design, analytical. Design by calculation.

3.19 Design, empirical. Design by trial and error.

3.20 Displacement. A vector quantity describing the change of position of a body, point, or surface relative to a fixed reference point.

3.21 Dunnage. Packaging material that is used primarily to fill void spaces or to pad projections in packages. Not used to cushion against dynamic forces.

3.22 Dust. Fine particles that are liberated from a material as a result of agitation and which tend to remain airborne for an appreciable period of time.

3.23 Dusting test. A test to measure the propensity of a material to liberate dust.

3.24 Effective bearing area. The item's surface area in the direction of impact.

3.25 Elasticity. The force-displacement characteristic of a material.

3.26 Encapsulation, complete. A method involving application of cushioning material completely around the entire exterior surface of an item.

3.27 Equivalent drop height. The height of free fall required by a body in a vacuum to attain a drop height particular instantaneous velocity.

3.28 Flotation. Completely encapsulated (see encapsulation, complete).

3.29 Fragility rating. The ratio of the maximum acceleration that an object can safely withstand to the acceleration of gravity, or the maximum acceleration that any specific item can withstand in any direction before breakage, damage, or malfunction occurs (also (G-factor, G-value).

3.30 Fragments. Small material particles that are liberated as a result of agitation and tend to settle immediately after liberation.

3.31 Fragmentation. A test to measure the propensity of a material to liberate fragments (including dust particles) during handling.

3.32 Frequency. The number of repetitions of a periodic process in a unit of time. Generally measured in Hertz (Hz) or cycles per second.

3.33 Frequency, discrete. A single, distinct frequency of sinusoidal oscillation.

3.34 Frequency of excitation. The frequency of an externally applied force or other input that causes the system to respond in some way.

3.35 Frequency, forcing. An input frequency of excitation.

3.36 Frequency, natural. The frequency produced by the system when a force is applied to the natural system and then withdrawn.

3.37 Frequency, resonant. A frequency at which resonance exists. (See Resonance).

Source: https://assist.dla.mil -- Downloaded: 2016-12-05T12:15Z
Check the source to verify that this is the current version before use.

3.38 Hydrolytic stability test. A test to determine the resistance of a material to a combination of elevated temperature and humidity.

3.39 Immobilize. To make the external parts of an object essentially stationary relative to each other.

3.40 Isolator. A device or material used to reduce the severity of applied shock and/or vibration to a packaged item.

3.41 Nesting. As used in this document, cushioning a series of like items with intermediate layers of cushioning material.

3.42 Overshoot. Excessive momentary response of a recording system to an applied signal.

3.43 Pad, corner. A tri-faceted cushion used at an interior corner of a shipping container to cushion a regularly shaped item or interior container.

3.44 Pad, face. A cushion that is applied adjacent to the face of an item or interior container in a package.

3.45 Peak Acceleration. The maximum acceleration recorded (after filtering) from a shock pulse.

3.46 Piezoelectric. The capability of some crystalline materials to generate an electric charge when stressed.

3.47 Preworking. Cyclic loading of a cushion prior to testing or use in order to produce essentially consistent compression characteristics.

3.48 Pulse rise time. The interval of time required for the leading edge of a pulse to rise from some specified small fraction to some specified larger fraction of the maximum value (Frequently, "rise time" is taken to include the time required to increase from 1/10 to 9/10 of the maximum value.)

3.49 Recoverability. The ability of a cushioning material to regain its original dimensions following removal of a deformation-causing load.

3.50 Resonance. Resonance of a system exists when any change in the forcing frequency results in an extremely large vibration output. Resonance of a system also occurs when the forcing frequency equals the natural frequency.

3.51 Shock. A sudden, severe non-periodic excitation of an object or system.

3.52 Shock pulse. A substantial disturbance characterized by a rise and decay of acceleration from a constant value in a short period of time. Shock pulses are normally displayed graphically as acceleration-time curves.

3.53 Shock pulse, simple. A shock pulse characterized by a smooth acceleration-time curve.

3.54 Shock pulse, complex. A shock pulse comprised of a wide range of frequency components that are not related harmonically to each other.

3.55 Shock Response Spectra. A plot of the maximum acceleration experienced by a single-spectrum degree-of-freedom system as a function of its own natural frequency in response to an applied shock.

Source: https://assist.dla.mil -- Downloaded: 2016-12-05T12:15Z
Check the source to verify that this is the current version before use.

3.56 Shock, velocity. A mechanical shock resulting from a non-oscillatory change in velocity of an entire system.

3.57 Single-degree-of-freedom system. A system, consisting of a rigid mass attached to a reference foundation by a massless spring, that is constrained along a straight line.

3.58 Spring Rate. The spring rate is the slope of the load-displacement curve or the change in weight in proportion to the change in displacement as the load is applied to the spring.

3.59 Strain. Deformation per unit thickness.

3.60 Stress. Force per unit area.

3.61 Transducer. An instrument that converts shock and vibration or other phenomena to a corresponding electrical or mechanical signal. An accelerometer is one type of transducer.

3.62 Transmissibility. A non-dimensional ratio of the response amplitude of a system in steady-state forced vibration to the excitation amplitude. The ratio may represent accelerations, forces, displacements, or velocities. Frequently in packaging testing, transmissibility represents the input acceleration from the vibration table over the output acceleration from the item.

3.63 Velocity. A vector quantity describing the time rate of change of displacement of a body in relation to a fixed reference point.

3.64 Velocity change. The difference in system velocity magnitude and direction from the start to the end of the shock pulse. Velocity change is also equal to the impact velocity plus rebound velocity.

3.65 Velocity shock. Mechanical shock resulting from a rapid net change in velocity.

3.66 Viability control. Specimen(s) of pure filter paper used in fungus resistance test to prove the viability of the inoculated fungus spores.

3.67 Vibration. The oscillation of an element of a mechanical system about a set point.

3.68 Vibration, periodic. A vibration consisting of a wave form that is repeated at equal time intervals.

3.69 Vibration, quasi-periodic. A vibration that deviates slightly from periodic vibration.

3.70 Vibration, random. A vibration having an instantaneous amplitude that can be specified only on a probability basis.

3.71 Vibration, steady-state. A periodic vibration.

3.72 Viscoelastic. An adjective indicating that a material or system has both energy-storing and energy-dissipating capability during deformation.

Source: https://assist.dla.mil -- Downloaded: 2016-12-05T12:15Z
Check the source to verify that this is the current version before use.

4.0 Define Shipping, Handling and Storage Environments

4.1 Introduction. An essential step to designing a cushioned package system is to determine the severity of the environment in which it will be shipped. The general idea is to evaluate the method of distribution to determine the hazards which exist and the levels at which they are present. These may include such things as accidental drops during handling, vehicle vibration, shock inputs, temperature extremes, humidity levels, and compression loads during storage. This handbook focuses on the areas of shock and vibration, but it is important that the other areas receive proper consideration during the design process.

4.2 Rough-Handling Considerations Associated with Shipping.

The nature and amount of rough handling a package receives in distribution depends on a number of factors. However, the two principal elements of rough handling are shock and vibration. The field of shock and vibration analysis is a highly complex branch of engineering science. Therefore, a detailed discussion of this subject is beyond the scope of this document. The following information is a brief summary of shock and vibration analysis concepts. [For a more detailed discussion see **(1-5, 9, 10, 17, 18)** in Appendix D].

4.3 Military Packing Levels. Packaging designed to protect an item during shipment, handling, indeterminate storage, and distribution to consignees worldwide. There are two military levels of protection. The definitions are listed below. (MIL-STD-2073-1C)

4.3.1 *Level A* (Assurance Level I from ASTM D4169). Protection required to meet the most severe worldwide shipment, handling, and storage conditions. A *Level A* pack must, in tandem with the applied preservation, be capable of protecting materiel from the effects of direct exposure to extremes of climate, terrain, and operational and transportation environments. Examples of situations which indicate a need for use of a *Level A* pack are: mobilization, strategic and theater deployment, open storage, and deck loading. Examples of containers used for *Level A* packing requirements include, but are not limited to, overseas-type wood boxes, sealed plastic and metal reusable containers.

4.3.2 *Level B* (Assurance Level II). Intermediate protection to meet moderate worldwide shipment, handling, and storage conditions. A *Level B* pack must, in tandem with the applied preservation, be capable of protecting materiel not directly exposed to extremes of climate, terrain, and operational and transportation environments. Examples of situations which indicate a need for use of a *Level B* pack are: security assistance (e.g., Foreign Military Sales) and containerized overseas shipments (MIL-VAN or SEA-VAN). Examples of containers used for *Level B* packing requirement include, but are not limited to, domestic wood crates, weather-resistant fiberboard containers, fast-pack containers (PPP-B-1672), weather-resistant fiber drums, and weather-resistant paper and multi-wall shipping sacks.

4.4 Shock.

A shock is a sudden, severe, non-periodic excitation of an object or system. Rough-handling practices during distribution produce the various types of shock (Figure 4-1). Generally, shock pulses are either half-sine, triangular, rectangular, or complex (Figure 4-2A). A simple shock pulse is characterized by a smooth acceleration-time curve. A complex shock pulse is comprised of a wide range of frequency components that are not related harmonically to each other. Simple shock pulses consist of everything but complex shock pulses (half-sine, saw-tooth, or rectangular). Pulse shape, peak amplitude, duration, and rise time express the intensity of simple shock pulses (Figure 4-2B). Rise time is the interval of time the leading edge of a pulse requires to rise from some small fraction, normally 1/10, to some larger fraction, normally 9/10, of the

Source: https://assist.dla.mil -- Downloaded: 2016-12-05T12:15Z
Check the source to verify that this is the current version before use.

maximum value. Adequate description of the intensity of more complex shock pulses necessitates graphical representation. Because the description of complex shock pulses by graphs is often considered unwieldy, the "shock spectrum" method has been used as an alternative. Pulses involving very sudden changes of velocity, i.e., extremely short rise times, are sometimes expressed as velocity shock.

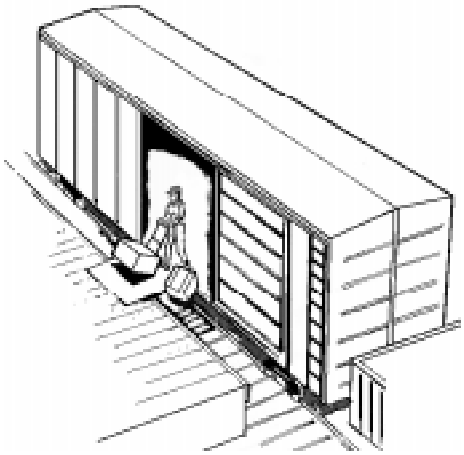

A. Train

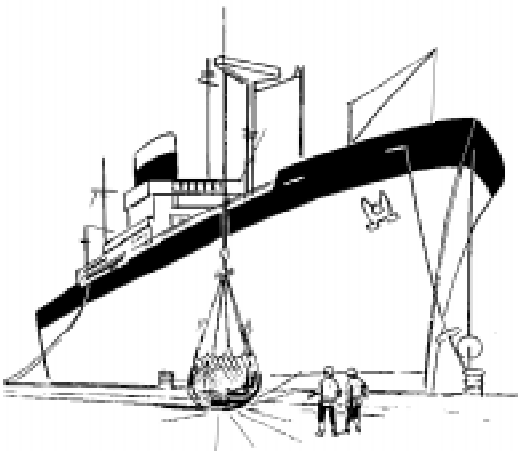

B. Ship

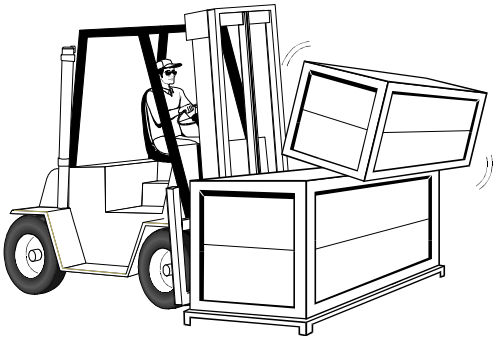

C. Forklift

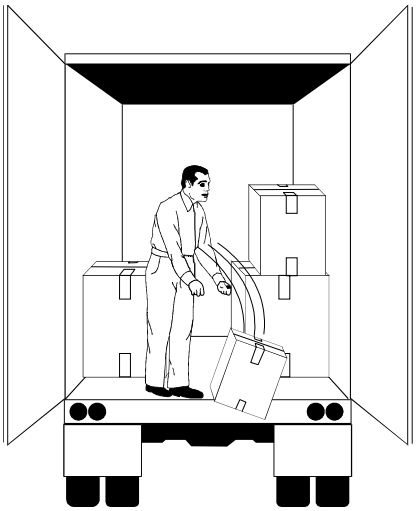

D. Truck

FIGURE 4-1. Some common shock-producing shipping practices.

Source: https://assist.dla.mil -- Downloaded: 2016-12-05T12:15Z
Check the source to verify that this is the current version before use.

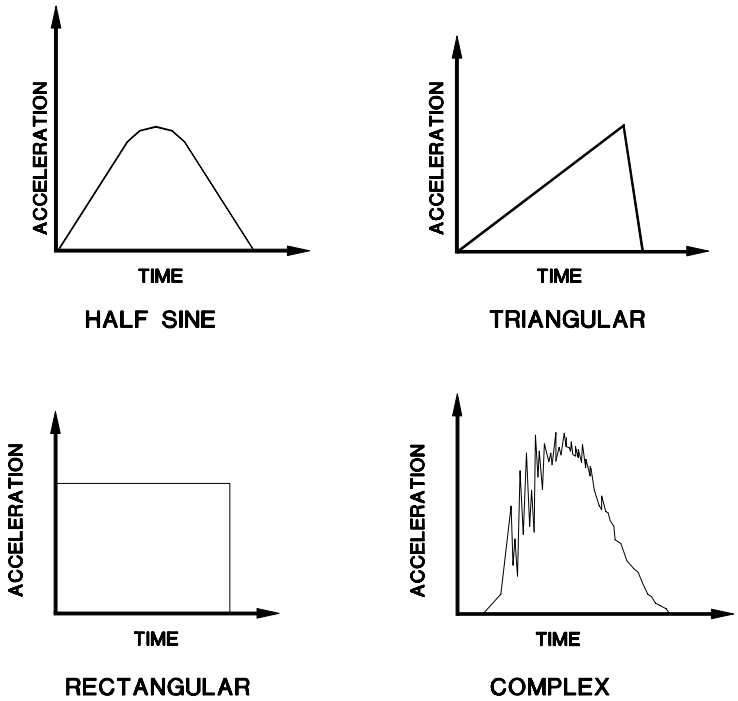

FIGURE 4-2A. Shock pulse types.

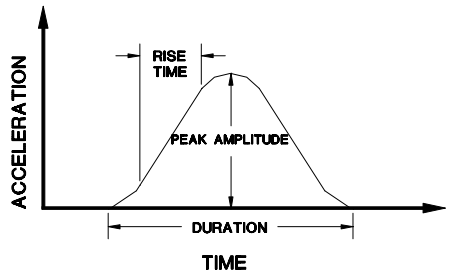

FIGURE 4-2B. Basic parameters of a shock pulse.

4.4.1 Shock Spectrum. The peak acceleration and relative displacement of the elements are particularly significant in describing the response of the item to the applied shock. For any particular acceleration-time pulse, the distribution of the maximum acceleration responses of a series of single-degree-of-freedom systems, (damped or undamped) plotted as a function of the frequencies of the system is called the "shock spectrum" for the pulse. Systems are assumed to be undamped, unless otherwise specified.

The engineer uses the shock spectrum extensively to calibrate and to ensure operational readiness of the shock testing equipment. It is also useful for specification of input wave forms in fragility rating tests (see 9.1.17). For a more detailed discussion of this concept refer to **(1, 5, 11, 12)**.

4.4.2 Intensity of shocks received by cushioned items. Certain factors that cause shocks to packaged items are common to all modes of shipment. For example, transfer or storage of lading usually involves human handling with or without the aid of mechanical equipment. Mishandling,

Source: https://assist.dla.mil -- Downloaded: 2016-12-05T12:15Z
Check the source to verify that this is the current version before use.

during these operations as exemplified by Figure 4-1, produces severe impacts to the packages that might exceed all other forces received during shipment.

Packaging designers have achieved much success in preventing shipping losses due to shock by designing their packages and cushioning systems according to the presumption that shocks received by the packages during handling operations will be the most severe received during the entire shipment. Generally, the intensity of shocks applied during laboratory testing of military packages is controlled by the impact velocities and surfaces required by various performance tests.

4.4.3 Drop Heights and Handling Effects. Shocks result from many types of events, but it is generally agreed that the most severe shocks a package will receive occur during handling operations. These include the time when a package is dropped while being loaded or unloaded from a vehicle, sorted or staged for further distribution, or when bulk is being made or broken. It is important, therefore, to identify the drop height from which the package will be expected to fall. **(16)**

4.4.3.1 General Conclusions. The following are some general conclusions about drop heights resulting from handling. **(14)**

1.) The probability of a package being dropped from a high height is minimal.
2.) Most packages receive many drops at low heights, while relatively few receive more than one drop from higher heights.
3.) Unitized loads are subjected to fewer and lower drops than individual packages.
4.) Most packages are dropped on their bases. In most studies, base drops have averaged over 50% of the total number of drops.
5.) The heavier the package, the lower the drop height.
6.) The larger the package, the lower the drop height.
7.) Handholds reduce the drop height by lowering the container relative to the floor during handling.
8.) Labels such as fragile and handle with care have some effect but can be considered minor.

4.4.3.2 Drop Height Determination. The drop height is determined from a number of factors. The size, weight and Level of Protection (4.3) are used to determine the appropriate drop height for analysis and testing purposes. See the table below revised from ASTM D 4169, Performance Testing of Shipping Containers and Systems, for an example of how to determine drop heights. These are recommended drop heights, check with the specific DOD entity to determine specific drop heights. (See Table IV).

TABLE IV
Drop Height, in. (mm) Assurance Level

Shipping Weight, lb (kg)	I (Level A)	II (Level B)
0 to 30 (0 to 13.6)	36 (914)	36 (914)
over 30 to 75 (to 34)	30 (762)	24 (610)
over 75 to 150 (to 68)	18 (457)	15 (381)

Source: https://assist.dla.mil -- Downloaded: 2016-12-05T12:15Z
Check the source to verify that this is the current version before use.

4.5 Vibration Caused by Shipment.

It is virtually impossible to travel in a vehicle without experiencing some form of vibration. The rotation of engine and wheels induce vibration to the frame. Inconsistencies in the travel medium cause the suspension system to respond and the frame to flex. These inconsistencies may be semi-periodic in nature such as the expansion joints in a road or rail joints in train tracks, or they may be purely random occurrences such as potholes or railroad crossings. In any event, all these types of vibration become mixed together to form a composite input to the package system.

The vibration encountered in the distribution environment is very complex in nature, consisting of intermixed frequency excitations emanating from a variety of sources. The nature of vibration is often categorized as being either random or periodic. Random vibration is defined as an oscillation whose amplitude can be specified only on a probability basis. Periodic vibration is the repetition of a particular wave form at equal time intervals.

The vibration encountered in the distribution environment is very complex in nature, consisting of intermixed frequency excitations emanating from a variety of sources. This type of vibration is often considered random in terms of the time domain because it is almost impossible to predict what will happen at any one instant. Yet in the frequency domain, a vehicle may display a very distinct signature which allows for the determination of the frequencies and levels which are present.

In the field of package cushioning design, knowledge of shipping vibration conditions is a prerequisite for design of a cushioning system that will not resonate within the package and thereby produce damage. Resonance conditions can result in large amplification of input forces and displacements thereby significantly increasing the probability of damage to the container and/or item contained therein **(13, 16)**.

4.5.1 Railway. The principal source of both vertical and lateral vibrations of lading during shipment by railway is the movement of the car wheels along the rails. Elasticity of the rails, irregularities in their surfaces, gaps between adjacent rails, flat spots on the wheels and wheel imbalance cause vertical forcing vibrations. The resultant vibrations, which obviously vary with the speed of the car, are applied through the trucks and spring suspension systems of the car, to the car beds. The combined weights of the car body plus lading constitute the mass of the mass-spring system. The principal forcing frequencies related to rail shipment and of concern to the cushioning designer range from 2.5 to 7.5 Hz and from 50 to 70 Hz.(**5**) Vibration environment measurements on railroad flat cars (**14**) are presented in Figure 4-3. Recorded events included switching, stopping, crossing intersecting tracks, level runs at 40 mph (64 kph), hill ascents and descents, bridge crossings, rough tracks, curves and tunnels. In recognition of the fact that many recorded inputs are the result of transient impulses rather than steady state vibrations, the data in Figure 4-3 has been presented in the form of probability curves, each curve indicating the percentage probability that the amplitude of a recorded vibration input will lie below the envelope of the curve.

4.5.2 Truck. Vibration transmitted to packages during shipment by truck may be caused by a variety of conditions. Some of the most common are impacts of the wheels at various speeds against irregularities in the road, wheel shimmy, engine vibration, and suspension imbalance. Under normal highway conditions, some of the more significant vibration inputs may occur in the 5-7 Hz ranges which are representative of the truck suspension system and tire natural frequencies, respectively. The vibration environment (vertical direction) for a flatbed semi-trailer (**14**) loaded with 15 tons (4.4 metric tons) of cargo is presented in Figure 4-4.

Source: https://assist.dla.mil -- Downloaded: 2016-12-05T12:15Z
Check the source to verify that this is the current version before use.

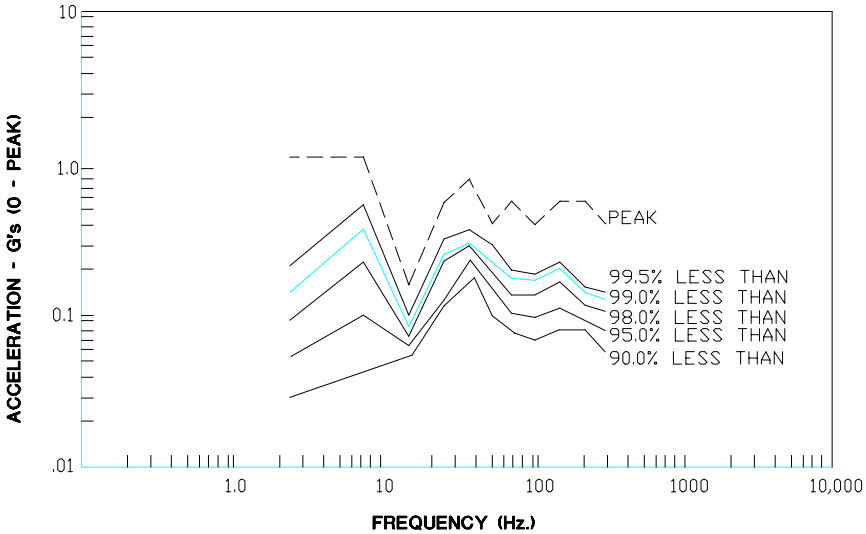

FIGURE 4-3. Frequency spectra, railroad, vertical direction, composite of various conditions.

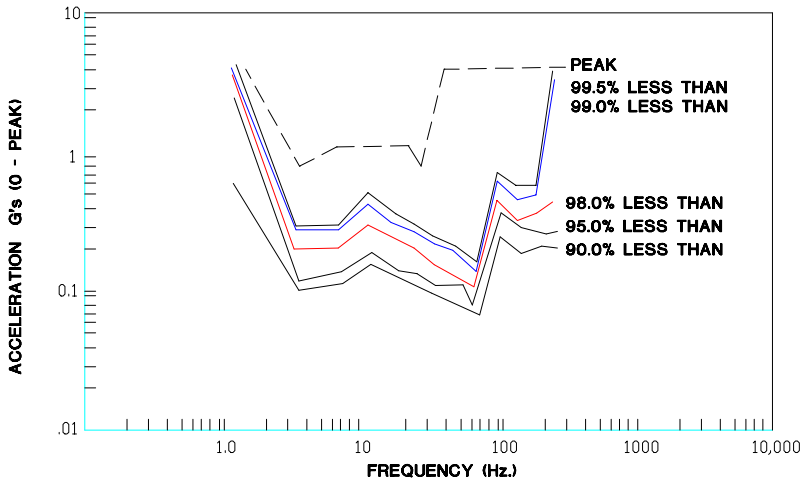

FIGURE 4-4. Frequency spectra, tractor-semiloaded, vertical front, center, aft) composite of various road types and speeds.

Measurements were made at various locations on the trailer floor. The plotted data represents a composite of sixteen different road conditions traversed at speeds varying from 10 to 60 mph (16 to 97 kph).

The probability curves indicate the percentage probability that the amplitude of a recorded vibration input will be below the envelop of the curve. Vibration measurements (vertical direction) made on the floor of an air-ride trailer van (**14**) are presented in Figure 4-5. Acceleration levels are expressed in G's. One conclusion drawn from the study which produced this data was that the amplitudes measured on the van floor rarely exceed one G peak.

Source: https://assist.dla.mil -- Downloaded: 2016-12-05T12:15Z
Check the source to verify that this is the current version before use.

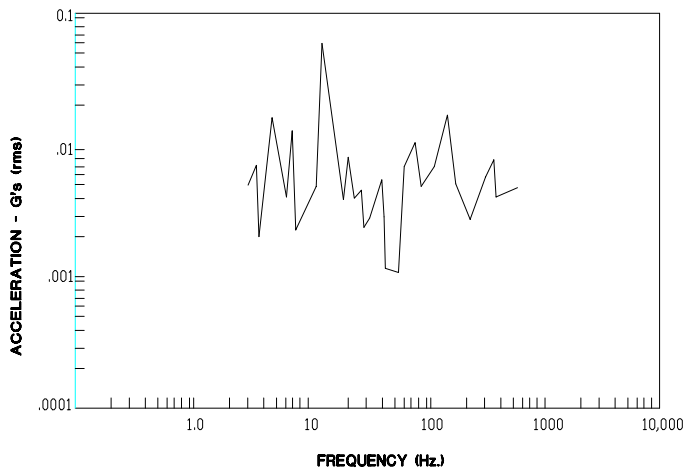

FIGURE 4-5. Frequency spectra tractor - trailer van air-ride suspension, vertical direction.

4.5.3 Aircraft. The principal aircraft used for transportation of cargo are powered either by propellers (with turbine engines) or by jet engines. Vibration transmitted to cargo as a result of the operation of these aircraft is traceable to a number of causes, such as propeller imbalance, flexural vibrations of propeller blades and other aircraft members due to aerodynamic disturbances, and engine vibrations. Additionally, impact of the tires with irregularities of the ground surface produces vibration in the aircraft during taxiing operations and during takeoff and landing. During taxi operations, maximum vertical accelerations of 0.2 to 0.5 G may be expected in the frequency range of 1 to 3 Hz. Packages resting on the cargo decks of various types of cargo aircraft in flight may be expected to experience maximum accelerations of less than 4 G's in the range of 8 to 500 Hz. Separate vibration data on propeller, jet and helicopter aircraft **(14)** operating under a variety of conditions are presented in Figure 4-6. Specific vibration data (vertical direction) for the C-130 cargo aircraft during take-off **(14)** are illustrated in Figure 4-7. This operation produced the maximum vibration environment.

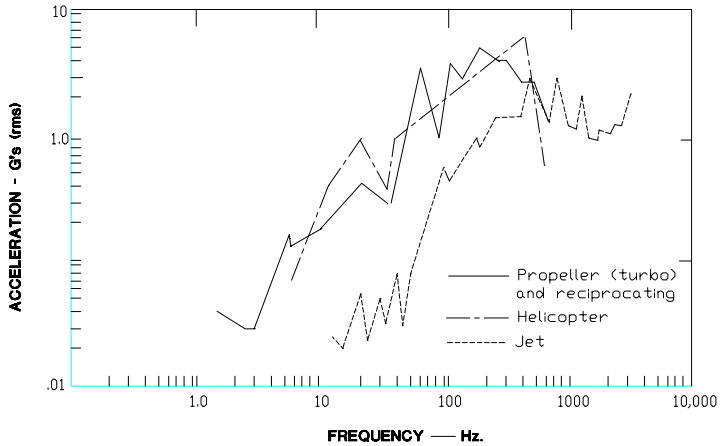

FIGURE 4-6. Aircraft acceleration envelope composite (Propeller, Helicopter, Jet).

Source: https://assist.dla.mil -- Downloaded: 2016-12-05T12:15Z
Check the source to verify that this is the current version before use.

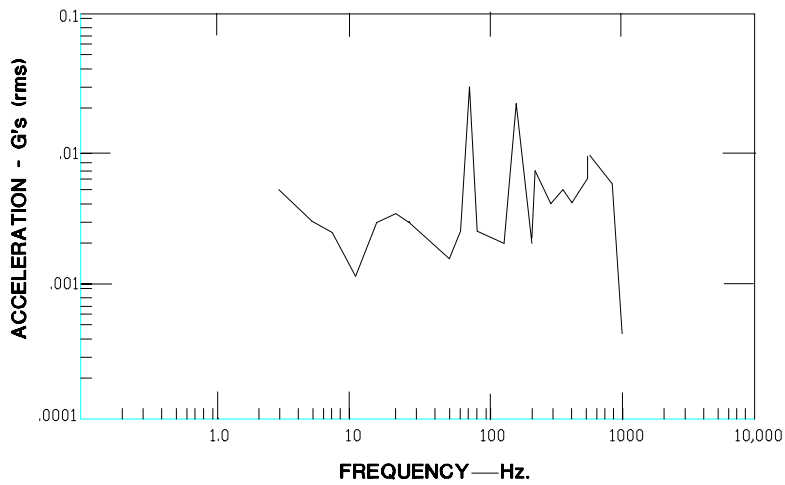

FIGURE 4-7. Frequency spectra, C-130 Aircraft takeoff, vertical direction.

4.5.4 Ship. Cargo transports can be considered to be complicated freely floating beams with many natural modes of vibration. The principal sources of vibration excitation of cargo ships are the beating against the hull of the pressure fields generated by the propeller blades, propeller drive shaft unbalance, and hydrodynamic buffeting of the hull. Because the nature of vibration transmitted to cargo is largely dependent upon the flexural response of the decks to the input vibration, it is obvious that the specific location of the cargo is important. Figure 4-8 presents a summary of vibration data produced under various operating conditions for many sizes and types of ships **(14)**. The plots include measurements in all directions and locations.

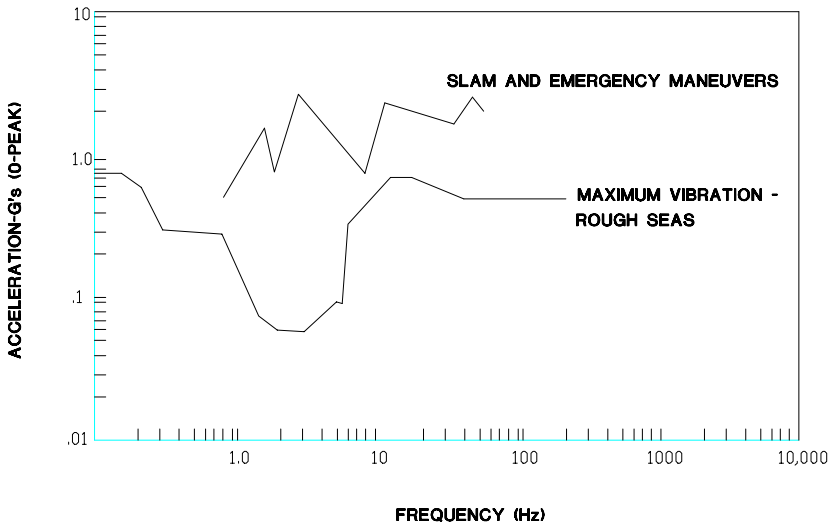

FIGURE 4-8. Ship acceleration envelope - composites (slam and emergency, maximum vibration).

Source: https://assist.dla.mil -- Downloaded: 2016-12-05T12:15Z
Check the source to verify that this is the current version before use.

5.0 DETERMINE ITEM CHARACTERISTICS

5.1 Design According to the Various Cushioning Characteristics.

Generally, each cushioning material has a combination of features that make it ideal for certain applications but not for others. Consequently, selection of a specific material for use in any application should include consideration of all of the characteristics of the cushioning material that relate to its function as a packaging material. Package cushioning design based upon the pertinent characteristics of cushioning materials is discussed in 5.2 through 5.16.

5.2 Item Fragility.

The index of fragility of packaged items customarily used by packaging engineers is the maximum acceleration (or shock) that any specific item can withstand in any direction before breakage or malfunction occurs. However, it is most essential that the packaging engineer recognize that amplification phenomena can produce drastically different peak accelerations of different parts of an item as a result of a single impact. Consequently, the part of the item to which the fragility rating is referred is most important. For example, Figure 5-1A shows the relationship of a fragile element in an item and the relationship of that item in a container when the system is acted on by a step velocity. The acceleration of the fragile element m_1 might differ greatly from that of the basic structure m_2 because of the differing amplification factors determined from Figure 5-1B which shows amplification factors for linearly damped systems.

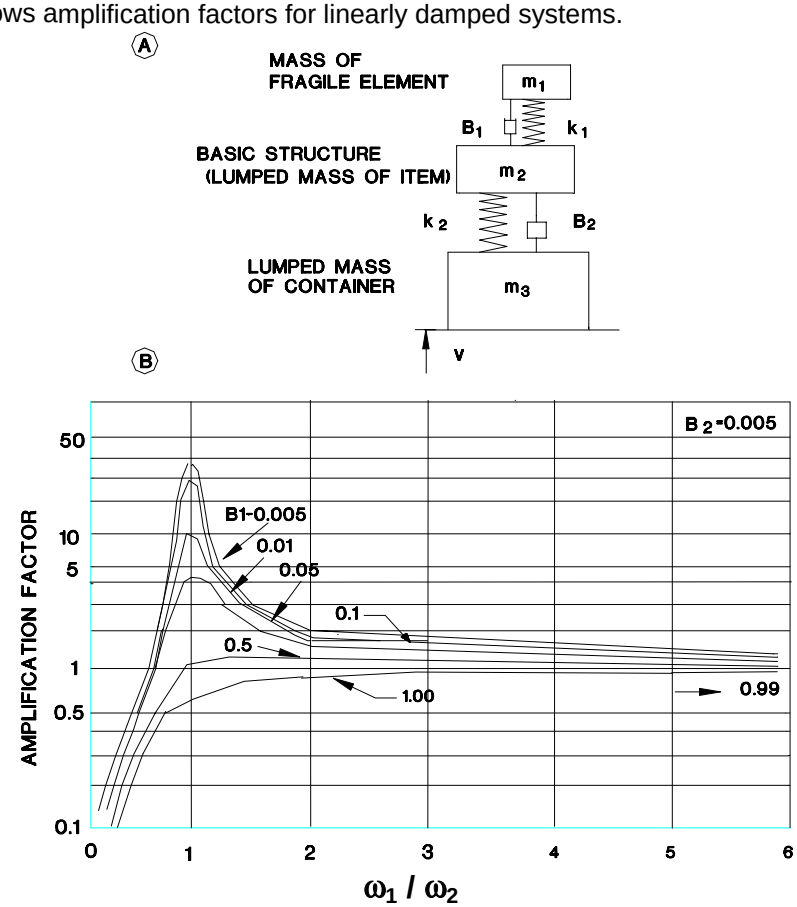

Figure 5-1. A, Shows that the acceleration of the fragile element m_1 might differ greatly from that of the basic structure m_2 because of the differing amplification factors.
B, Amplification factors for linearly damped systems.

Source: https://assist.dla.mil -- Downloaded: 2016-12-05T12:15Z
Check the source to verify that this is the current version before use.

Amplification Factor = Maximum Acceleration m_1 / Maximum Acceleration m_2
B_1 = Fraction of critical damping of the element across spring k_1
B_2 = Fraction of critical damping of the element across spring k_2
k_1 = Spring rate of fragile element of packaged item
k_2 = Spring rate of linear cushioning
m_1 = lumped mass of fragile element of packaged article
m_2 = lumped mass of packaged item
m_3 = lumped mass of outer container
v = velocity
ω_1 = Radian frequency of vibration of package item-cushioning system (k_1 /m_1)
ω_2 = Radian frequency of vibration of an element of a packaged item (k_2 /m_2)

Therefore, in order to effect a standard fragility rating procedure, all fragility assessment, cushioning design methods, and test procedures to determine shock transmission to packaged items considered herein are based upon peak acceleration rating of the basic rigid structures of items. In those instances where none of the accessible portions of items are relatively rigid, the item should be enclosed or blocked in position inside a relatively rigid interior container; acceleration measurements should be based upon the peak acceleration of the substituted case corresponding to damage or malfunction of the enclosed item. Paragraph 6.3.2 discusses techniques for "immobilizing" items.

5.2.1 Fragility Assessment. The objective of the fragility test is to determine by laboratory test methods the maximum shock an item can sustain during shipment before damage will occur. Cushioning systems lower the shock levels felt by the item so the item is less likely to break.

5.2.1.1 Shock Duration. The time duration of the shock pulse is an important consideration. Many times there is confusion between the acceleration levels felt in aircraft (e.g. 2 G's) and those felt with packaged items. The difference is the duration of the shock. Aircraft acceleration has duration of seconds so only very small accelerations can be tolerated, while cushioned packaged items have a duration of milliseconds. The duration of most acceleration-time pulses that cushioned packaged items received because of dropping from heights of 18 to 36 inches range from 10 to 40 milliseconds. When determining fragility levels for items, it is important to remember that package system drops have a very short duration. See 5.2.1.4 for estimating fragility ratings. Fragility Testing is the best way to determine the fragility levels. Also Table V gives a listing of Typical Fragility Ratings. **(7)(21)**

5.2.1.2 Fragility Assessment By Testing. The most accurate method for fragility assessment of the item (not the container) is by testing the item until damage occurs. The concept that is considered to be most appropriate is the Damage Boundary Concept.

5.2.1.3 Damage Boundary Concept. The Damage Boundary concept of fragility determination advanced by Newton (**11**)(**12**) is based on a rectangular waveform shock pulse. This pulse is used to approximate the complex waveforms seen by the item during impact. The Damage Boundary Curve depicted in Figure 5-2, can be defined for any particular item through testing of the item on a programmable shock machine. See 9.1.17 for the referenced test procedure and a photograph of the programmable shock machine.

The Damage Boundary Curve relates peak shock acceleration on the vertical axis and total velocity change on the horizontal axis to product damage. A point or combination of peak acceleration and velocity change that fall above and to the right of the curve results in product damage. *Point C* is such a combination. However, *Points A and B* will not result in damage. *Point B*, although it represents a relatively high acceleration level, it also represents a very low velocity

Source: https://assist.dla.mil -- Downloaded: 2016-12-05T12:15Z
Check the source to verify that this is the current version before use.

change. From the relationship shown in Figure 5-2, a high acceleration level and a low velocity change can only result from a shock pulse of a very short duration. For *Point A*, although the shock pulse may have produced a response from the product or its components, the acceleration level was not great enough to cause damage. (**1**)

TABLE V
Typical Fragility Ratings

15-24 G's -- Missile Guidance Systems, Precision Aligned Test Equipment, Gyros, Inertial Guidance Platforms

25-39 G's -- Mechanically Shock-Mounted Instruments, Digital Electronics Equipment, Altimeters, Airborne Radar Antennas

40-59 G's -- Aircraft Accessories, Most Solid-State Electronics Equipment, Computer Equipment

60-84 G's -- TV Receivers, Aircraft Accessories

85-110 G's -- Refrigerators, Appliances, Electro-Mechanical Equipment

110 + G's -- Machinery, Aircraft Structural Parts such as Landing Gear, Control Surfaces, Hydraulic Equipment

CAUTION: Beware of estimating item fragility values without accurate knowledge of actual fragility values for types of equipment as a basis for inference. Such estimates frequently are grossly conservative and incompatible with economical cushioning design.

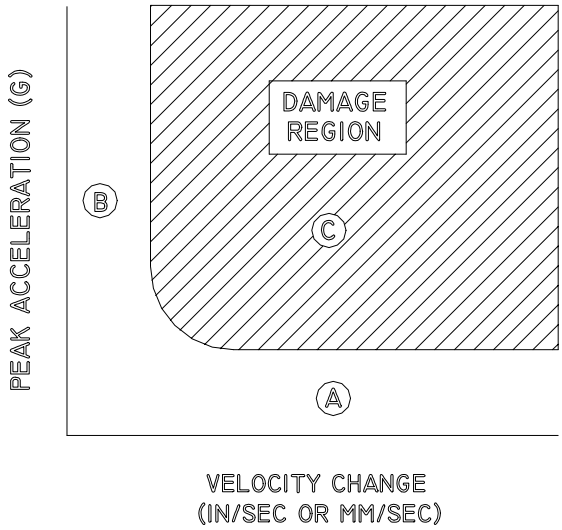

FIGURE 5-2. DAMAGE BOUNDARY CURVE.
POINT A: NO DAMAGE
POINT B: NO DAMAGE
POINT C: DAMAGE
REFERENCE (1)

Source: https://assist.dla.mil -- Downloaded: 2016-12-05T12:15Z
Check the source to verify that this is the current version before use.

5.2.1.4 Fragility Assessment By Estimation. While testing of items to determine equitable fragility ratings is desirable for cushioning design, on many occasions, such testing is infeasible. Some common reasons for this are:
(1) Sufficiently accurate testing and recording equipment is not available.
(2) Only a few expensive items are to be shipped and, therefore, the potential savings to be realized by accurate cushioning design are insignificant compared to the expense of fragility testing.
(3) Records from previously conducted fragility tests of similar items are available for estimation of the fragility ratings.

It is important that the packaging designer interpret clearly the results of environmental shock tests, such as those specified in MIL-STD-810. The shock levels required by such environmental performance tests are intended to simulate operational conditions, but not necessarily the shipping environment--which is often more severe. Unfortunately because of item cost or uniqueness, designers rarely perform actual fragility tests. As an alternative, the package designers merely use the operational environmental test shock input values as the fragility ratings for the items for cushioning design purposes. The operational environmental shock test values for items are sometimes only about 20 percent of actual fragility ratings. The packaging engineer must differentiate between operational environmental test conditions and actual fragility values, since the accuracy of their cushioning design will vary with the accuracy of their assessment of the design parameters.

In some instances, a particular kind of item is shipped in successive lots. Once shipping records (including damage claims) have been obtained, redesign of the packaging for greater efficiency is possible for subsequent shipments. To accomplish this, it is necessary to estimate the fragility of the item on the basis of the known performance of the cushioning used in previous shipments and to compute the most economical cushioning system. The following example will illustrate how shipping records might be used to estimate the fragility rating of an item.

PROBLEM: A rigid 8-inch (200-mm) cubical item that weighs 12 pounds (5.5 kg) has been shipped successfully in a package utilizing 8 x 8 x 4--inch (200 x 200 x 100--mm) polyethylene pads. During a subsequent shipment involving the same kind of items and containers but 8 x 8 x 3--inch (200 x 200 x 75--mm) polyethylene pads, some items were damaged by impact. The maximum drop height is unknown. Estimate the fragility rating of the items.

SOLUTION: Since both the maximum height of drop and item fragility rating are unknown, it is necessary to assume a fixed value for one of these parameters in order to calculate the other. Accordingly, assume a flat drop from 30 inches (0.75 m). (For purposes of illustration in this problem, assume that a check of cushioning performance data indicates that, for the loading condition involved, and 8 x 8 x 3--inch (200 x 200 x 75--mm) polyethylene pad will produce a peak acceleration of 97 G; a 4-inch (100-mm) pad would produce a peak acceleration of 53 G.)

Therefore, the mean fragility rating of this kind of item probably lies between 53 and 97 G. If desirable, the package designer should base the cushioning redesign upon a fragility rating of about 50 G and a 30-inch (0.75m) flat drop.

Note: The design methods involving the use of peak acceleration-static-stress curves are described in 5.4.

5.2.2 Product Improvement Feedback. Based upon the results of the fragility tests, it may be desirable to strengthen the product rather than ship each one inside an expensive package. Tradeoffs between product cost, product reliability, and packaging costs should be identified and

Source: https://assist.dla.mil -- Downloaded: 2016-12-05T12:15Z
Check the source to verify that this is the current version before use.

ranked for effectiveness. Often it is possible to raise the fragility level of a product with minor modifications or design changes. This may add a slight cost to each product, but if the packaging requirements drop significantly, the total system price goes down. **(16)**

5.3 Shock Isolation of the Cushioning System.

5.3.1 Shock Isolation.

The shock isolation capability of cushioning materials is dependent upon such factors as their dynamic force-displacement characteristics, damping qualities, loading rates, and item weights. However, for purposes of cushioning design against shock, this handbook advocates methods involving "peak acceleration-static stress" curves described in paragraph 5.4.1.

While these curves serve as indicators of the shock isolation capability of cushioning materials, one can gain a better understanding of this cushioning property by additionally considering that compressive force-displacement (stress-strain) curves indicate the shock absorption capability of the cushioning materials (5.3.3) **(6)(18)**.

5.3.2 Shock Isolation Considerations. Package shock isolation problems usually involve the following considerations:

1.) **Determine item fragility.**
2.) **Determine the shock protection characteristics of commonly used cushion materials**
3.) **Design and test the package system that will properly attenuate vibration input at product critical frequencies.**

5.3.3 Shock Background. To allow analysis of the effects of shock upon a cushioned package by the use of relatively simple laws, it is advantageous to consider the cushioned item within a container as a simple, damped, single-degree-of-freedom mass-spring system (Figure 5-3). Additionally, consider the item to be homogeneous. Consider the cushioning to be viscoelastic, to have linear elasticity and to be of insignificant mass relative to the item. Furthermore, consider the item, container and impacting surface to be rigid, and assume that the container will not rebound.

In order to properly understand the phenomenon of shock, it is necessary to define the terms displacement, velocity, velocity change, and acceleration, all of which play a role in development of a shock pulse. **(17)**

5.3.3.1 Maximum Cushioning Displacement (D). Maximum cushioning displacement is the maximum amount of movement of the item/cushioning system in the container. Displacement is measured in millimeters in the metric system and inches in the English system. Displacement is important factor for static-compressive force-displacement as discussed in paragraph 9.1.9.

5.3.3.2 Drop Height (h) (or Container Displacement). Drop height (or container displacement) is the free fall drop height measured in meters in the metric system or inches or feet in the English system (See Figure 5-3A).

5.3.3.3 Velocity. Velocity is the rate at which distance changes or the ratio of the drop height over the time it takes the package to drop. It is measured in meters per second, kilometers per hour, inches per second, miles per hour, or similar units. Velocity is a vector quantity which means it has both magnitude and direction. (It is the integral of acceleration and the differential of container displacement with respect to time.)

Source: https://assist.dla.mil -- Downloaded: 2016-12-05T12:15Z
Check the source to verify that this is the current version before use.

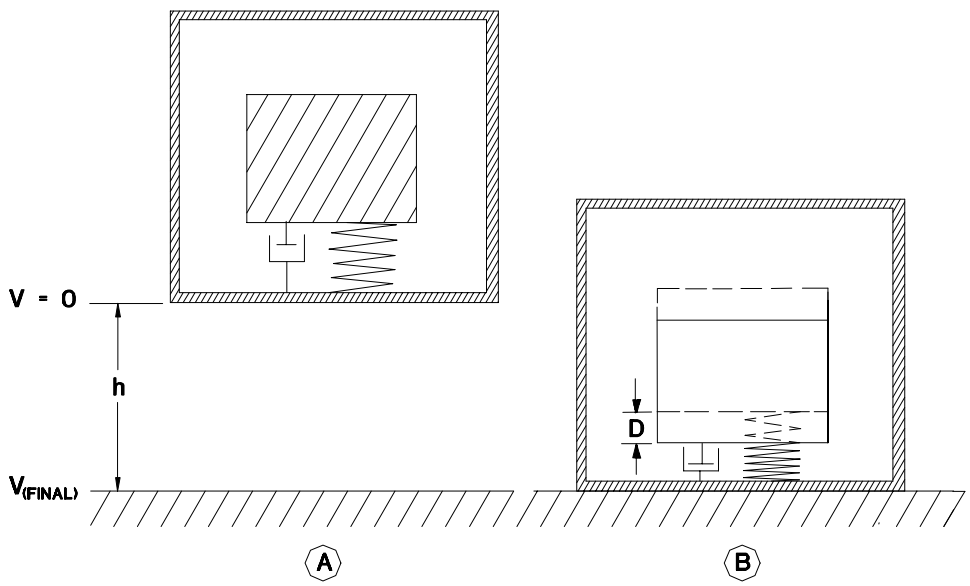

FIGURE 5-3. Idealized mechanical system representing a falling package that contains a cushioned item.
A, at the instant of release,
B, at the instant of maximum cushioning displacement.

5.3.3.4 Acceleration. Acceleration is the rate at which velocity changes. It is measured in meters/sec/sec, inches/sec/sec, or similar units. It is generally defined as a percentage of Earth's gravitational acceleration at sea level (g) = 9.8 m/sec/sec (386 in/sec/sec) which is a constant. Therefore, 10G equals 10 times 9.8 m/sec/sec. (See equation **5:1**)

5.3.3.5 Peak Acceleration and Deceleration. Peak acceleration is also the peak or the high point of the acceleration vs. time pulse. Note that deceleration is negative acceleration. The two terms are often used interchangeably, although acceleration properly refers to an increasing rate of velocity change whereas deceleration describes a decreasing rate of velocity change. (Acceleration is the differential of velocity with respect to time).

In package testing, acceleration is measured with an accelerometer on the item. The accelerometer's output is in G's. Section 8.0 discusses package testing in detail. See Figure 5-4 for an example of acceleration versus time output.

G = a/g (5:1)

Where:

G = output ratio of the item's acceleration over earth's gravitional acceleration
a = input acceleration (units of m/sec/sec or in/sec/sec)
g = earth's graviational acceleration [Constant of 9.8 m/sec/sec (386 in/sec/sec)]

Velocity Change (ΔV) is another unit often used in dynamic packaging work. It refers to the difference between initial and final velocity and can be thought of as a measure of energy dissipated. It is equal to the area under the acceleration vs. time pulse (the integral of the pulse) See Figure 5-4.

ΔV = Peak Acceleration x Effective Duration (5:2)

Source: https://assist.dla.mil -- Downloaded: 2016-12-05T12:15Z
Check the source to verify that this is the current version before use.

For a body in freefall, the following also applies:

IF:

$$\Delta V = V_i - (-V_f)$$

$$\Delta V = V_i + (V_f) \qquad (5:3)$$

AND:

$$V_i = 0$$

$$V_f = \sqrt{2gh} \qquad (5:4)$$

THEN:

$$\Delta V = \sqrt{2gh} \qquad (5:5)$$

Where:

ΔV = Change in Velocity (m/sec or in/sec)
V_i = Initial or rest velocity (m/sec or in/sec)
V_f = Final Velocity (m/sec or in/sec)
g = 9.8 m/sec² or 386 in/ sec²
h = container drop height

In other words, the change in velocity equals the difference between initial velocity and final velocity. The initial velocity is generally the "at rest" velocity where the velocity would be zero. So the change in velocity would be equal to the final velocity or $\sqrt{2gh}$.

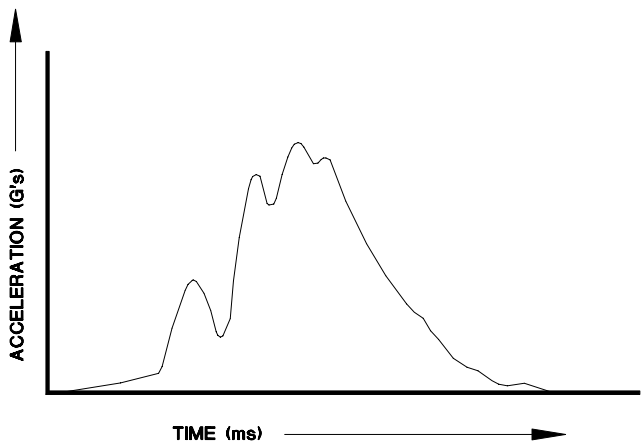

FIGURE 5-4. Acceleration-time pulse showing shock wave effects.

5.4 Shock Absorption Capability.

5.4.1 Peak Acceleration-Static Stress Curves as Shock Absorption Indicators. In general, peak acceleration-static stress curves have proved to be the most practical basis for indicating the shock absorption capability of cushioning materials and for solving problems of this nature.

Peak acceleration-static stress curves are derived from dynamic compression test data according to the test procedure and computations given in paragraph 9.1.5. Essentially, this procedure involves impact tests with relatively rigid loading devices that strike the cushioning specimens squarely (thereby simulating flat drops). The specimens are mounted on a rigid impact base.

Source: https://assist.dla.mil -- Downloaded: 2016-12-05T12:15Z
Check the source to verify that this is the current version before use.

A typical set of peak acceleration-static stress curves representing the different thicknesses of a polyethylene foam (2.0 pcf) (32.0 kg/m^3) for a 30-inch (0.75-m) drop height is shown in Figure 5-5. Additionally, sets of peak acceleration-static stress curves for various cushioning materials and design parameters are shown in Appendix B graphs.

Since peak acceleration-static stress curves indicate directly the relationship between peak acceleration (Gm) and static stress (force/area), their shapes also indicate the versatility and efficiency of the materials. The lower its curve swings (toward Gm = 0), the better protection a material will provide. Also, materials characterized by curves that occur through a broad static stress range are more versatile than those that extend through a more limited range.

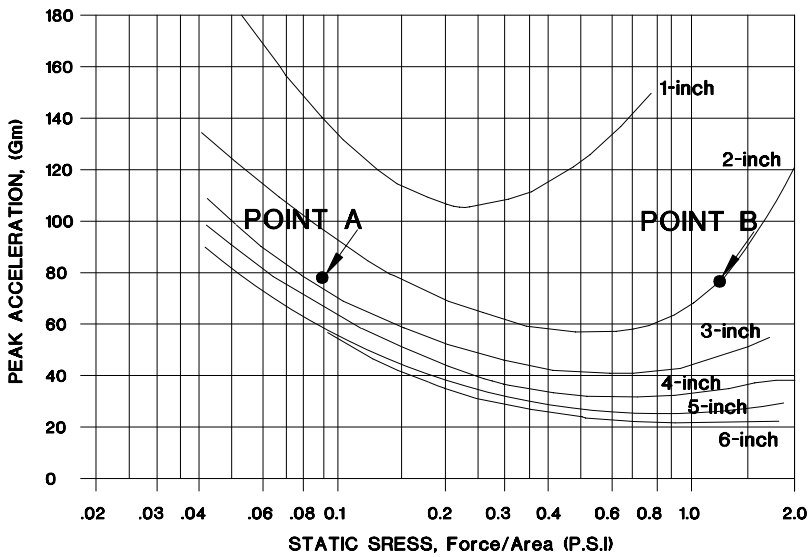

FIGURE 5-5. A Typical Set of Peak Acceleration-Static Stress Curves (Polyethylene, 2 pcf, 30-inch drop height).

To determine approximately how much of a particular kind of cushioning material is required to protect a specific item, two steps are necessary: first, determine the bearing area of the item; second, select the minimum thickness from a set of peak acceleration-static stress curves for the cushioning material that will apply a peak acceleration that is less than the fragility rating for the item.

For flat drops, the cushioning material bearing area against the sides of regularly shaped rectangular items can be determined by a simple calculation using the area of the sides. However, calculation of the effective bearing area of the same items for corner-wise impacts is more complicated. Many times estimations from the flat drops are made for corner-wise impacts.

Also troublesome is the calculation of the effective bearing area of irregularly shaped items. However, for such items, it may be simpler to measure the effective bearing areas for flat and corner-wise impacts by light projection methods.

This can be accomplished simply by holding the item on the floor in the proper impact attitude directly below an illuminated light bulb. The effective bearing area is the area within the shadow cast by the item. The bulb should be located a sufficient distance away to minimize the error caused by parallax.

Source: https://assist.dla.mil -- Downloaded: 2016-12-05T12:15Z
Check the source to verify that this is the current version before use.

The described light projection method for determining effective bearing area of items is suitable when the cushioning material is to be applied by complete encapsulation, but it is unsuitable for application by corner pads and side pads. These application techniques are discussed in Section 6.0.

5.4.2 Effects of variable temperature, altitude and humidity upon peak acceleration-static stress curves. The compression characteristics of different kinds of cushioning material when exposed to high humidity or temperature extremes are highly variable. Consequently, if packages containing cushioning material are expected to be exposed to temperature extremes, high altitude or high humidity during shipment or storage, the packaging designer must recognize the danger in designing by data that indicate material performance only at moderate atmospheric conditions. It is very important that the package designer must test each design at the extreme temperatures which the package may encounter.

Table VI shows the minimum “Safe Temperatures” for the different types of foam cushioning material. Until more complete knowledge about the low temperature performance characteristics of all kinds of materials is gained, it is recommended that the designer use cushioning materials according to the minimum "safe" temperatures listed **(8, 22)**.

TABLE VI
Foam Minimum "Safe Temperatures"

Material	Probable Minimum "Safe" Temperature
Urethane foam (polyester type)	-10°F (-23°C)
Urethane foam (polyether type)	-20°F (-29°C)
Expanded polystyrene	-20°F (-29°C)
Polyethylene	below -60°F (-51°C)

5.5 Vibration Isolation of the Cushioning System.

Generally shock isolation is considered first in the design of packaging for items of a size and weight which are susceptible to free fall drop during manual handling. After an acceptable pack has been designed with regard to shock protection it should then be evaluated with respect to its vibration response and isolation characteristics.

5.5.1 Vibration Isolation Considerations. Package vibration problems usually involve the following considerations:

1.) **The response of the pack "as a whole" to its vibration environment.**
2.) **The response of secondary elements of the item to the vibration environment.**
3.) **Determine the vibration characteristics of commonly used cushion materials**
4.) **Design and test the package system that will properly attenuate vibration input at product critical frequencies.**

5.5.2 Vibration Background. Although principal emphasis in package cushioning design is placed upon achieving protection of items from shock, the cushioning system must also protect items from vibration received during shipment. Steady state vibration inputs at relatively low fragility levels can cause damage if their frequencies match or approach natural frequencies of secondary elements or components of the item. In a situation such as this, the resultant resonant conditions can amplify component acceleration and displacements to the failure level.

Source: https://assist.dla.mil -- Downloaded: 2016-12-05T12:15Z
Check the source to verify that this is the current version before use.

Vibration input conditions can also contribute to damage indirectly if they cause the item-cushioning system itself to vibrate at its natural frequency. Continuous "working" of the cushioning material under this condition could result in degradation of the cushioning to the extent that subsequent shock inputs might reach damaging levels. The fact that most common package cushioning materials exhibit non-linear load-displacement characteristics complicates the practical analytical method for solving packaging vibration isolation problems. The mathematical functions representing non-linear systems are not amenable to direct solution. Despite these difficulties, a rational design method is available for the solution of vibration problems using a combined analytical and experimental approach as described in the following text.

5.5.2.1 Linear Systems. A linear system is one whose response is directly proportional to the excitation force. Although most package cushioning materials exhibit non-linear characteristics, a brief discussion of linear systems will aid in understanding some of the fundamental aspects of vibration as related to packaging considerations. A rigid item cushioned in a package can be idealized as the linear viscoelastic single-degree-of-freedom system represented by Figure 5-6. The forcing vibrations caused by shipment are applied to the outer container and transmitted to the contents.

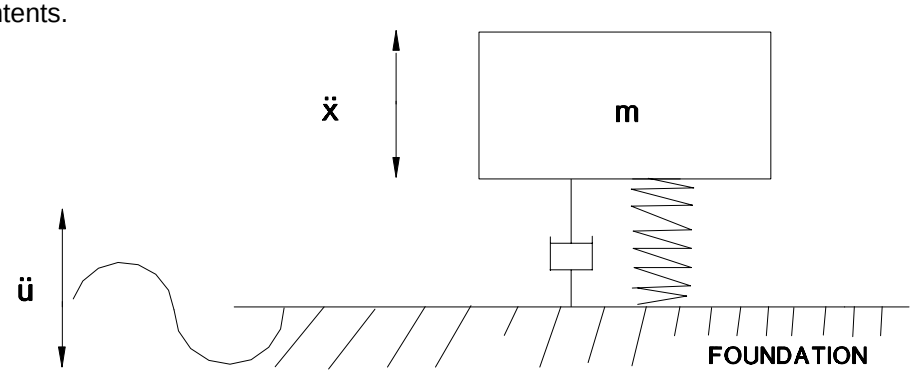

FIGURE 5-6. Idealized item-cushioning system bearing on a vibrating foundation.

5.5.2.2 Non-linear Systems. A non-linear system is one whose response is not directly proportional to the excitation force. The slope of the force-displacement curve for non-linear materials is continuously changing with displacement as represented by the tangent and anomalous type materials in Figure 5-7.

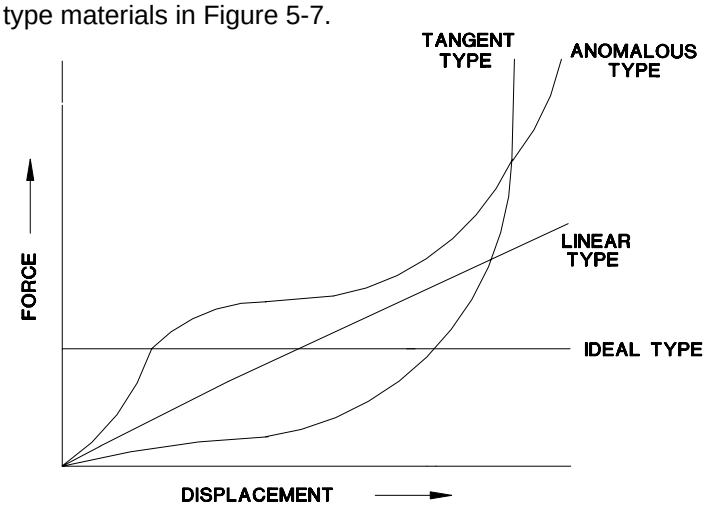

FIGURE 5-7. Force-displacement curves for various types of cushions.

Source: https://assist.dla.mil -- Downloaded: 2016-12-05T12:15Z
Check the source to verify that this is the current version before use.

5.5.3 Vibration Transmissibility. Any linear cushioning system can be represented by the set of generalized transmissibility curves presented in Figure 5-8 and those referenced in Appendix C. The transmissibility of a cushioning system is expressed as a non-dimensional ratio of its response amplitude to the excitation amplitude. The ratio may be one of forces, displacements, velocities, or acceleration. As indicated in Figure 5-8, the shape of the curve is affected by the degree of damping in the system. The transmissibility curves are referenced in Appendix C. For best results, it is recommended that the designer use actual instrumented testing of each package system design to determine the system transmissibility.

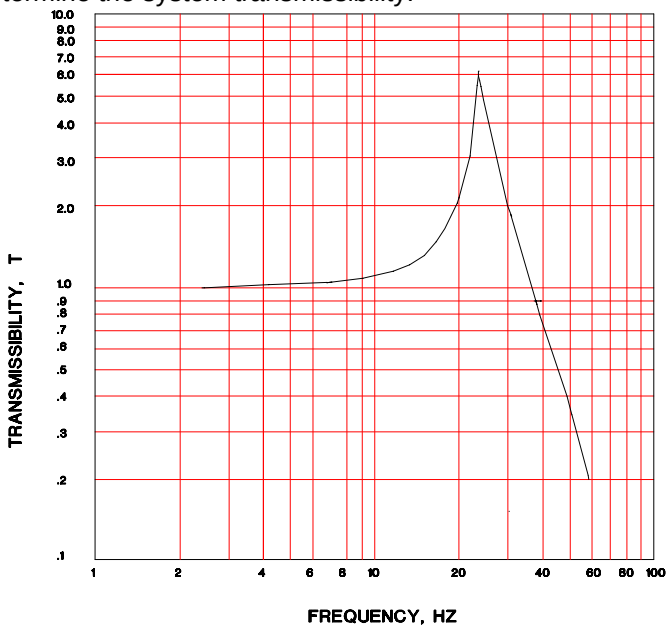

FIGURE 5-8. Polyurethane Foam (Ether). 2 PCF, 4-Inch Material Thickness, .18 PSI Static Stress.

Note: In packaging testing, transmissibility represents the input acceleration from the vibration table over the output acceleration from the item.

5.5.3.1 Transmissibility Formula. The vibration transmissibility for a linear cushioning system is indicated by the function $\mathbf{T_r}$, which is defined as the ratio of the force or motion transmitted to the mass through an isolation system to the force or motion exerted or described by the foundation (vehicle bed). The equation representing transmissibility ($\mathbf{T_r}$) is as follows:

$$T_r = \sqrt{\frac{1 + [2B_2 (f_f / f_n)]^2}{[1 - (f_f / f_n)]^2 + [2B_2 (f_f / f_n)^2]^2}} \qquad \textbf{(5:6)}$$

Where:

f_f = the forcing frequency of the foundation

f_n = the undamped natural frequency of the item-cushioning system

B_2 = the fraction of critical damping of the cushioning material **(1,5)**

The relationship between $\mathbf{T_r}$, $\mathbf{B_2}$, and forcing frequency $\mathbf{f_f}$ for a viscous-damped linear system such as depicted by Figure 5-6 is illustrated in Figure 5-9. As shown, the transmissibility of such a system increases from unity to a maximum as $\mathbf{f_f / f_n}$ **approaches 1.0** (resonance). Theoretically, for $\mathbf{B_2 = 0}$, **Tr** is an infinite value. However, since all systems possess some damping, $\mathbf{T_r}$ is

Source: https://assist.dla.mil -- Downloaded: 2016-12-05T12:15Z
Check the source to verify that this is the current version before use.

reduced accordingly. Since the maximum acceleration **x** experienced by the item during vibration is:

$$\ddot{x} = T_r \ddot{u} \qquad \textbf{(5:7)}$$

Where **ü** is the maximum acceleration of the foundation, clearly the greatest danger of damage to the item of a vibrating cushioned system occurs at resonance. Figure 5-9 also indicates that vibration isolation of a viscous-damped linear system only begins when:

$$f_f / f_n > \sqrt{2} \qquad \textbf{(5:8)}$$

The foregoing discussion indicates that appreciable damping in the cushioning material is desirable. Similarly, the f_f / f_n ratio should be larger than $\sqrt{2}$. A practical limit on the desirability of high damping inherent in the cushioning is the adverse effect (increase of transmitted shock) caused by fractions of critical damping above 0.5 (**1**).

At resonance, The transmissibility of a viscous-damped system is a function solely of the damping fraction **B**. For systems where **B < 0.1**:

$$T_r = 1/2\ B \qquad \textbf{(5:9)}$$

5.5.4 Natural Frequency Calculations.

5.5.4.1 Calculation of natural frequency of a linear-cushioned system. The undamped natural frequency (f_n) of the linear system illustrated in Figure 5-6 can be determined from the following equation:

$$f_n = \frac{1}{2\pi}\sqrt{\frac{kg}{W}} \qquad \textbf{(5:10)}$$

Where: **k** = the linear stiffness of the spring.
W = the weight of the item.
g = 32.2 ft/sec² (9.8 m/sec²)

5.5.4.2 Determination of natural frequency of a non-linear system. Because of the variation in the stiffness (k) of non-linear cushioning materials as they are deformed, the natural frequency (f_n) of package cushioning systems employing these materials cannot be calculated directly from equation (**5:6**) presented in 5.5.3.2. To estimate the natural frequency of a non-linear cushioning system, a static compressive stress-strain curve, such as shown in Figure 5-10, is required for the cushioning material. This curve is then used in conjunction with the following modified form of equation (**5:10**) for natural frequency:

$$f_n = \frac{1}{2\pi}\sqrt{\frac{df/ds}{WT/gA}} \qquad \textbf{(5:11)}$$

where: f = unit stress (exerted by the item against the cushion)
s = strain
W = the weight of the item
T = the original thickness of the cushion
A = the bearing area of the cushion
g = 32.2 ft/sec² (9.8 m/sec²)

Source: https://assist.dla.mil -- Downloaded: 2016-12-05T12:15Z
Check the source to verify that this is the current version before use.

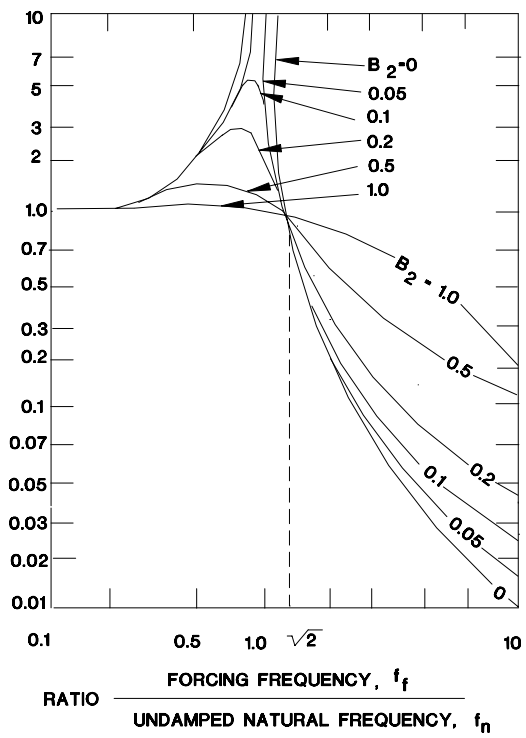

FIGURE 5-9. Effects of damping on the transmissibility curve for the viscous-damped linear cushioning system depicted in Figure 5-6.

This formula serves as an approximation of the natural frequency of the cushioning system if the displacement of the item during vibration is small and if the stress-strain behavior of the cushion is not abruptly non-linear in the range of interest. The natural frequency (f_n) of a cushioning system may be calculated by determining the slope (df/ds) of a static compressive stress-strain curve for the cushioning material (see Figure 5-10) at the static stress point representative of the cushion bearing load and then substituting the value for (df/ds) in equation **5:11**.

Static stress-strain curves may be derived from tests according to the procedure described in paragraph 9.1.9. Curves for the cushioning material considered in this handbook are referenced in Appendix A.

5.5.5 Transmissibility Curve Development. Because of non-linear elasticity and a lack of quantitative data for the damping characteristics of most package cushioning materials, it is necessary to derive transmissibility curves by testing. The transmissibility curve presented in Figure 5-8 is typical of the curves referenced in Appendix C.

The transmissibility curve is derived from the amplification attenuation curve. The amplification/attenuation curve defines the frequencies at which a cushion material will amplify vibration input and the frequencies at which it will filter out or attenuate the vibration. One amplification/attenuation curve is generated for each material type and material thickness combination.

To run the test, a block is monitored with a response accelerometer and loaded with weight until it reaches the desired static stress level when resting on a cushion sample. One cushion sample is placed below the test block and another is placed above it. This whole configuration is then placed in a corrugated container and secured to the table of the vibration test machine. See Figure 5-11 for test setup and paragraph 9.1.6 for test parameters.

Source: https://assist.dla.mil -- Downloaded: 2016-12-05T12:15Z
Check the source to verify that this is the current version before use.

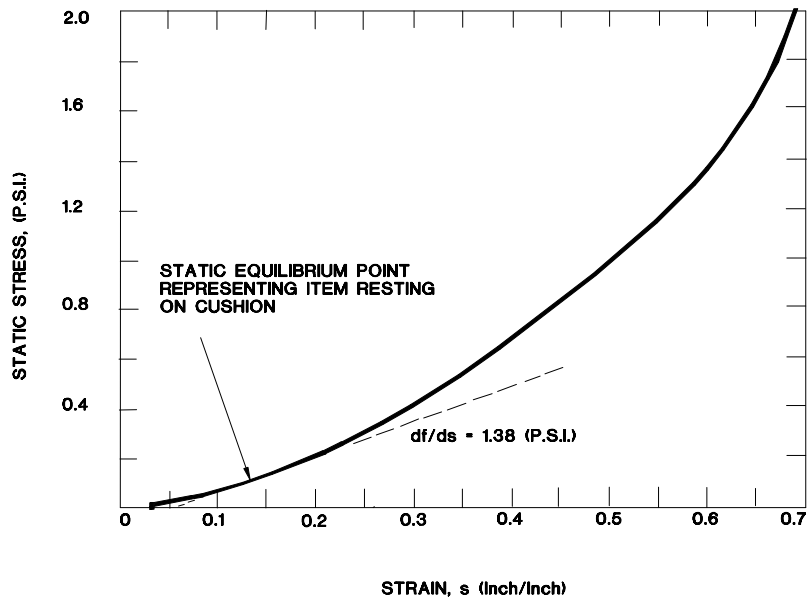

FIGURE 5-10. Static compressive stress-strain curve for a hypothetical cushioning material.

A resonance search test is performed and a transmissibility plot of the cushion response is generated. **(Remembering that the transmissibility is equal to the response of the cushion accelerometer over the table accelerometer. See Figure 5-11.)** The weight in the test block is then changed to obtain the next desired static stress loading and the test is repeated with fresh cushion samples. This process is repeated until the desired range of static loading has been explored. A minimum of five static loading test points are used to generate an amplification/attenuation curve. Random vibration testing may also be used to generate the transmissibility plot.

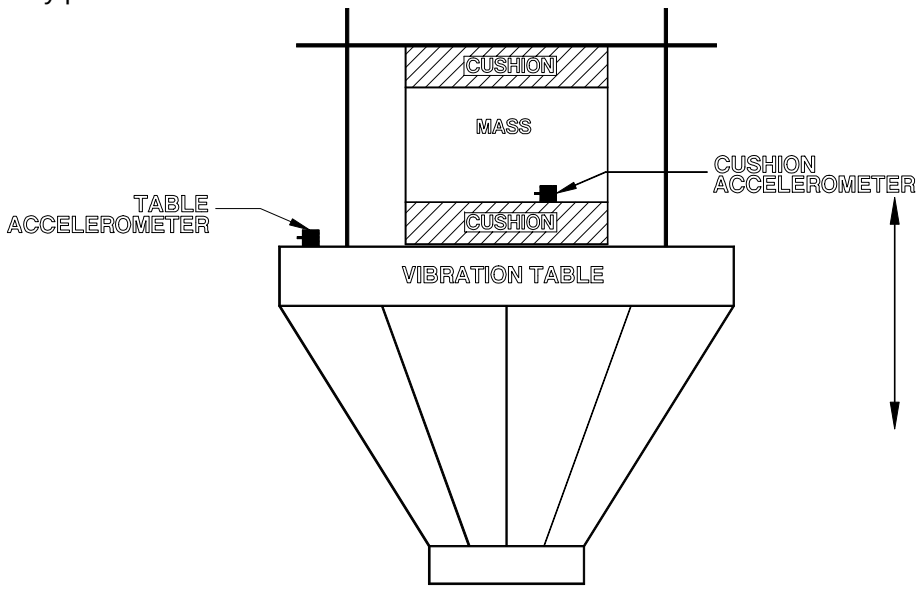

FIGURE 5-11. Vibration Transmissibility Test Setup
(See Reference **No. 18)**

Source: https://assist.dla.mil -- Downloaded: 2016-12-05T12:15Z
Check the source to verify that this is the current version before use.

Once all the transmissibility plots have been generated, the data is plotted on the amplification/attenuation curve as shown in Figure 5-12. The amplification/attenuation curve describes the vibration performance of the material as a function of static loading.

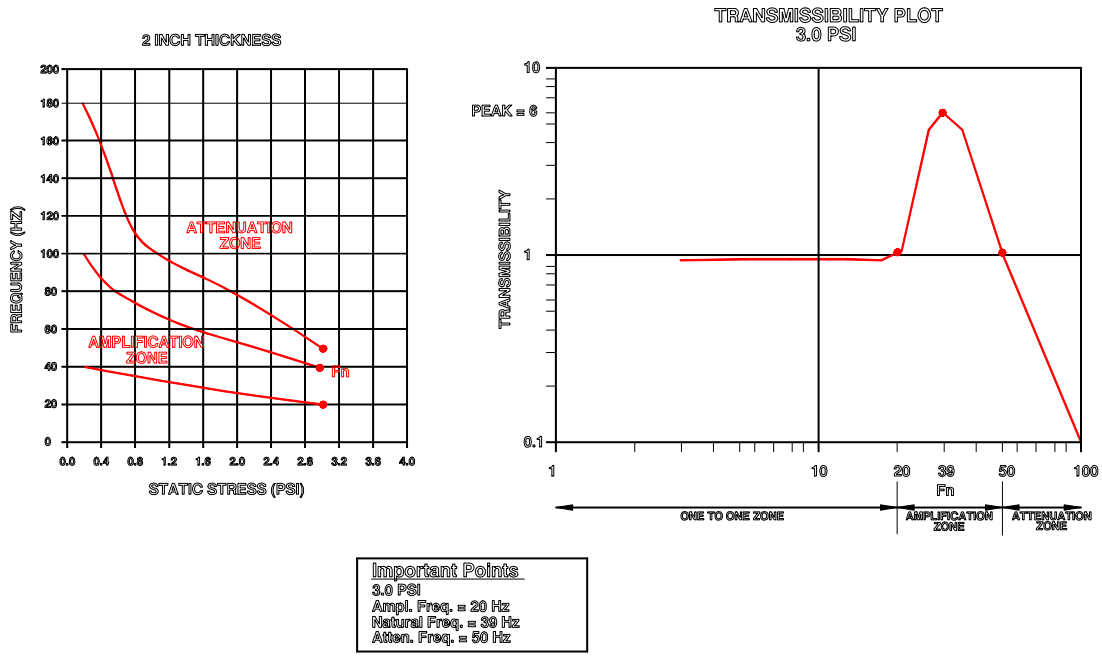

FIGURE 5-12. AMPLIFICATION / ATTENUATION CURVE AND TRANSMISSIBILITY AT 3.0 PSI (16)

In general, the shape of the amplification/attenuation curve slopes downward as static loading increases. This results from the basic characteristics of spring-mass systems. As static loading increases, the amount of weight supported by a given area of cushion increases. Since the cushion/spring characteristics have not changed, the natural frequency of the system tends to decrease.

5.6 Density.

Density of a cushioning material is important in affecting its cost of usage, since its weight contributes to the tare weight of a package; cost of shipment is directly related to the tare weight of the packages. A recommended procedure for determining density is given in paragraph 9.1.3.

Note: Density is also of some value as an indicator of cushioning performance of some materials. However, generalizations about the correlation between cushioning performance and density of material should be avoided, since many materials (especially the plastic foams) exhibit little direct correlation between performance and density.

5.7 Cost.

Progressive packaging design requires the designer to minimize the cost of packaging wherever possible. Unfortunately, the true total cost of cushioning in specific applications usually involves b many factors, some of which are intangible. In practice, calculation of the true total cushioning cost is usually too laborious to justify the effort required for such calculations. Nevertheless,

Source: https://assist.dla.mil -- Downloaded: 2016-12-05T12:15Z
Check the source to verify that this is the current version before use.

rational selection of the most inexpensive material for particular applications requires an equitable computation based upon the principal elements of cost. Accordingly, the "Cushioning Cost Index" (Cx) is suggested herein as a reasonable basis for equitable comparison of cushioning costs.

Cost comparison by equation (**5:12**) (See **Table VII**) considers materials according to the required thicknesses as indicated by the method given in paragraph 5.4.3.1 (without extra thickness allowance for expected creep of the pad as determined in paragraph 5.10). This exclusion is considered expedient to simplify the cost comparison without introducing large error.

To determine the most economical cushioning material for particular applications, first decide which of the materials available will protect the item, according to the methods and considerations discussed elsewhere in Sections 5.0 and 6.0. Once the materials and cushioning application techniques have been selected, the appropriate information can be substituted in equation (**5:16**) and the most economical methods and materials computed. To further illustrate the use of equation (**5:16**), the following example is given (**Table VII**):

PROBLEM: Five rigid items, each 16 x 16 x 12-inches (400 x 400 x 300-mm) weighing 10 pounds (4.5 kg), and having a fragility rating of 50 Gs, must be packed individually in corrugated fiberboard boxes to withstand flat drops from a 30-inch (0.8 m) height. Because only five items are involved, complete encapsulation is considered to be the simplest and most economical cushioning application method (Section 6.0). By reference to the peak acceleration-static stress curves for 30-inch (0.8m) drop in Appendix B, it is determined that adequate protection would be afforded by materials 1 through 6, 12 through 15, 17 and 18 (see **Table VIII** for decoding). Of these, only 1 and 5 are stocked. Therefore, determine which of the stocked materials are most economical for packaging the items separately by complete encapsulation.

Packaging Cost Index: The format given in equation **5:16** has been developed to provide an orderly cost computation procedure. When the details are entered into the formula, the "cushioning cost index" (Cx) for each cushioning material will be the result. These values can then be compared to determine the most economical cushioning material to use. In this example, since Cx is lowest for material number 1, it is the least expensive material for this application.

TABLE VII
Cushioning Cost Index

Cost of Materials	Cost of Labor	Cost of Shipping

$$C_x = \left[\left(\frac{VC_m}{n} + C_p + C_{ic} + C_{ec}\right)\right] + \left[C_L\left(P_p + P_{ic} + P_{ec}\right)\right] + \left[C_s\right] \qquad (5:16)$$

Where:

V is the volume of cushioning material required to protect the item.

C_m is the initial cost per unit volume of cushioning material (delivered to the package designer's plant) in dollars.

n is the number of trips for the entire package. In the formula, those items divided by “n” will be reused for each trip.

C_p is the material cost of platens or die-cut trays in dollars.

Source: https://assist.dla.mil -- Downloaded: 2016-12-05T12:15Z
Check the source to verify that this is the current version before use.

C_{ic} is the cost of the interior container in dollars.

C_{ec} is the cost of the exterior container in dollars.

C_L is the cost of the labor per man-minute in dollars.

P_p is the labor in man-minutes that is required to fabricate and apply the platens or die-cut trays.

P_{ic} is the labor in man-minutes that is required to set up, load, and close the interior container.

P_{ec} is the labor in man-minutes that is required to set up, load, and close the exterior container.

C_s is the cost of shipping the complete package to its destination.

Note 1: The cost of storage of cushioning materials prior to use is excluded from this formula because it is highly intangible and usually considered to be part of overhead.

5.8 Recoverability (Compression Set)

Cushioning materials have varied ability to regain original thickness in the direction of compressive deformation after removal of the load. In the field of packaging it is common to express any deviation from perfect recoverability (100 percent of original thickness) as "set", because most cushioning applications involve compression loading of cushioning materials, the set is usually "compression set".

Various types of loading can cause compression set. During shelf storage wherein materials are subjected to relatively long-term static compressive loads, most cushioning materials tend to acquire a certain amount of compression set. Similarly, dynamic compression loading occurring during shipment can cause compression set. Because compression set can be caused by various forms of loading, several procedures are recommended herein for evaluation of this characteristic (See paragraph 9.1).

Compression set is undesirable in cushioning material for two principal reasons:

(1) Looseness (and the related increased likelihood of damage)

(2) With some cushioning materials it indicates that the compressive stress-strain behavior of the material has changed and the possibility of damage caused by "bottoming" has also increased.

Some effects of looseness in a packaged item. See Figure 5-13. Where (**A**) represents a cushioned item being displaced normally from its original position during a drop against a flat rigid surface; (**B**) illustrates the same item in a different position due to jostling and looseness and thus receiving an impact on a point; and (**C**) represents a loosely packaged item moving in a direction opposite from that of the exterior container and cushioning. The instance of (**C**) could occur during vibration of the package as it rests on the bed of a truck or rail car; the vibration causes larger peak forces and accelerations to be developed and these, in turn, increase the likelihood of damage to the item. Compensation for compression set is usually accomplished by:

(1) Designing according to data that have involved a realistic amount of preworking prior to test (paragraph 9.1.16) and repetition of impacts, or

(2) Applying an excess of cushioning material in pre-compressed condition [usually accomplished indirectly when such compensation is made for creep (paragraph 5.8.3)].

Source: https://assist.dla.mil -- Downloaded: 2016-12-05T12:15Z
Check the source to verify that this is the current version before use.

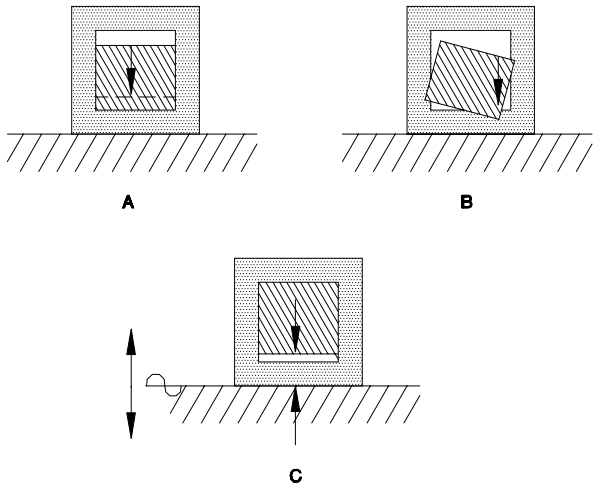

FIGURE 5-13. Effects of looseness in a package.
[A], Normal displacement during impact.
[B], Non-uniform loading during impact by item misoriented because of its looseness.
[C], Out-of phase motion of item/container during vibration.

5.8.1 Static Compressive Force-Displacement Characteristic.
This characteristic is used to evaluate the relationship between a slowly applied compressive load and the resultant displacement of cushioning materials. Knowledge of this characteristic (especially in the converted form, stress-strain curves) is useful to the packaging designer for the following applications:
(1) Solution of vibration isolation problems (See Section 6), and
(2) Determining the outer container size required to accommodate the item and cushioning.

A recommended procedure for determining the static force-displacement (and stress-strain) characteristics of cushioning materials is given in paragraph 9.1.9. Static stress-strain curves for various kinds of cushioning materials are referenced in charts 1 through 18 of Appendix A.

The information on displacement of cushioning material by an item at rest is required by the packaging designer to estimate the maximum Static Stress (Force/Area) for which a particular cushioning material should be used. Although the maximum amount of initial static compression of the cushion cannot be prescribed by rule, it is reasonable to restrict this to within 15 percent (a strain of 0.15) of the initial cushioning thickness. In some instances, the shape of the stress-strain curve provides a rather sharp indication of the maximum usable static stress value for the material.

For example, with any of the styrene foam cushions represented by the compressive stress-strain curves referenced in charts 9 and 10 in Appendix A, any static stress value that would load a material in the "plateau" region may be undesirable. Such a condition would cause the cushion to bottom quite rapidly, especially when loaded toward the part of the curve where the strain begins to increase abruptly, such as any point above the 0.6 in/in (0.6 mm/mm) point on the curve in chart 9.

The amount of displacement of the cushion by the item at rest is also useful to the designer in calculation of the inside dimensions for the exterior container. To prevent looseness, the container dimensions are calculated to be the minimum that will accommodate the cushioning and

Source: https://assist.dla.mil -- Downloaded: 2016-12-05T12:15Z
Check the source to verify that this is the current version before use.

item while at rest. The following example problem is given to illustrate further the use of static cushioning displacement data:

Note: Exclude creep considerations when calculating the exterior container dimensions. As a practical consideration, when the calculated container height occurs between multiples of 1/4 inch, the next lower multiple of 1/4 inch should be used. (For metric, use the lower centimeter value).

PROBLEM: An 11 x 8 x 8-inch (280 x 200 x 200-mm) item that weighs 50 pounds (222.4 N) is to be packaged in Polyurethane Ester [(2 pcf, 4 inch) (0.032, 100mm) by complete encapsulation. Determine what size of corrugated fiberboard container is required to accommodate the item and cushioning. [Assume that the bottom of the item is 11 x 8 inches (280mm x 200mm).]

SOLUTION:
Bearing stress of the bottom of the item =

$$\frac{\text{50 pounds force}}{\text{8 in x 11 in}} = 0.56 \text{ psi } (.039 \text{ kg/cm}^2)$$

From Appendix A, graph Total deflection = 4 x 0.1 = 0.4 inch

Therefore, the container height (inside dimensions) would be:

Container height = full thickness of top pad + item height + compressed thickness of bottom pad

= 4" + 8" + (4.0" - 0.4")

= 15.6 inches (0.4 meters)

Assuming all cushions are four inches thick, then the dimensions of the exterior container would be:

19 x 16 x 15.6--inches (0.48 x 0.41 x 0.40--meters).

5.8.2 Creep.

Virtually all cushioning materials, when subjected to a constant load for a long period of time, tend to lose thickness. This phenomenon is called the creep characteristic of the material. The creep rate for all common package cushioning materials is greatest at initial loading and declines exponentially with elapsed time thereafter. After a load is removed, a cushion will regain most of its original thickness, but some permanent set will have been produced. Therefore, to prevent looseness in packages, it is desirable to apply extra thickness of cushioning material (in a pre-compressed state) in the package. However, because of the difficulty of closing a container after insertion of pre-compressed cushions, their use to offset creep is practicable only if relatively light pre-compression forces are required for application. In practice, it is customary to limit pre-compression of pads to the top-to-bottom direction in packages.

The amount of extra cushioning thickness required to offset creep can be estimated arbitrarily or, preferably, be calculated when creep-time data and knowledge of the shipment time is available. Regardless of the method of determination used, it is customary to add extra thickness to either the top or bottom cushioning--but not to both.

Source: https://assist.dla.mil -- Downloaded: 2016-12-05T12:15Z
Check the source to verify that this is the current version before use.

Creep-time curves for various cushioning materials are not given herein because these data have, so far, been unavailable for the commonly used range of static stress. However, designers might be able to obtain creep-time data from the manufacturers or vendors of cushioning material.

If creep-time data are available, the extra thickness required to offset creep can be calculated by the following formula:

$$T_a = T + \frac{(\text{Creep\%})\,(T)}{100} \qquad (5:17)$$

Where:

T_a is the thickness of material required to protect the item, including the extra allowance to offset creep
T is the original thickness of material required to protect the item without allowance for creep.
Creep is the expected percentage loss of material over time

If the calculation of **T_a** indicates an unavailable thickness, it is generally advisable to use the next greater thickness of material.

A suggested method for determining the creep characteristics of cushioning materials is given in paragraph 9.1.8.

5.9 Tensile Strength and Flexibility.

Minimum tensile strength and flexibility are customarily prescribed in cushioning material specifications in order to make sure that the materials will not fail during normal handling and application, especially during wrapping operations. Suggested test procedures to evaluate minimum tensile strength and flexibility are given in paragraphs 9.1.10 and 9.1.14, respectively.

5.10 Dusting and Fragmentation.

Despite large differences in their composition, all cushioning materials, if subjected to scuffing or miscellaneous rough handling, will release some fragments. These fragments might then become widely scattered.

Inside a package, the liberation of such particles is particularly objectionable when such items as optical equipment are being shipped because the jostling associated with shipment causes the particles to work into remote spaces of the item. In addition to possible damage to the item, considerable labor in cleaning might be required before the part is usable. Outside a package, the liberation of such particles may constitute a nuisance, both as litter and airborne particles. Dusting and fragmentation testing procedures are discussed in paragraph 9.1.11.

5.11 Corrosion Prevention

Cushions may react to the container material causing corrosion. Corrosion is the deterioration of a material by chemical action, usually as the result of oxidation, galvanic, acid, or alkali action. Corrosion can cause pitting or etching or the formation of loose or granular particles. The package designer must insure that the cushioning material will not react with the container or the item so as to cause corrosion. The contact corrosivity test is commonly used to determine if the cushioning material will cause corrosion. See paragraph 9.1.15.

Source: https://assist.dla.mil -- Downloaded: 2016-12-05T12:15Z
Check the source to verify that this is the current version before use.

5.12 Hydrolytic Stability.

Some cushioning materials, especially certain formulations of polyester-type urethane foam, tend to deteriorate rapidly in the presence of high humidity and temperature. Since the degradation of the material might result in substantial reduction of the stiffness of the material (and therefore cushioning ability), a hydrolytic stability test (paragraph 9.1.13) is included in material specifications to insure the stability of the performance characteristics of the material in the presence of high temperature and humidity.

5.13 Abrasive Qualities.

Two aspects of abrasion relative to cushioning materials concern the package designer: (1) the inherent abrasiveness of the component material of cushion materials themselves, and (2) the capability of cushioning materials to prevent abrasion of the item by rough surfaces or projections of other objects (staples, surfaces of crate members, impinging corners of exterior containers of nearby packages, etc.).

Currently, no generally accepted test for the abrasion prevention capability of cushioning materials exists. One formidable obstacle deterring the development of such a test method is that little is known about the nature of the abrasion hazards of service on which such a test must be based.

Amounts of material required to prevent abrasion must be selected according to past shipping records, sound judgment, and common carrier regulations. A suggested test for the abrasiveness of cushioning materials is given in paragraph 9.1.7.

5.14 Fungus Resistance.

In some instances, cushioning materials are used in conjunction with open packages or crates that are exposed during shipment and storage to warm, humid environments for rather long periods of time. Since such environmental conditions are conducive to fungus growth and some cushioning materials are inherently susceptible to fungus attack, a fungus resistance test, such as is given in paragraph 9.1.12, is sometimes required in the procurement documents to insure adequate performance of materials under the described conditions.

The packaging designer should use discretion, however, in specifying the use of fungus-resistant cushioning materials. While practically any cushioning material can be made fungus resistant, treatment of naturally non-resistant cushioning materials for fungus resistance usually involves impregnation with a salt. Unfortunately, the salt impregnation can introduce corrosion tendencies.

Note: After the package designer has completed their design, it is essential that testing be performed to ensure that the container system will withstand the expected container life and the predicted environments.

Source: https://assist.dla.mil -- Downloaded: 2016-12-05T12:15Z
Check the source to verify that this is the current version before use.

6.0 PACKAGE DESIGN AND APPLICATION TECHNIQUES

After the package designer has: defined the shipping, handling and storage environments; determined the item characteristics; researched product redesign (if necessary); and has researched the various cushioning materials, it is now time to design the cushioning system which in turn determines the size of the container needed. Shock and vibration calculations are required to ensure that the packaging system will adequately and efficiently protect the item.

6.1 Shock Design Procedure. Cushioning design for shock protection primarily involves peak acceleration-static stress curves. However, cushioning design also requires various supplemental considerations, including application techniques and buckling. **In all cases, it is very important to perform actual drop tests of packaging configurations, as the theoretical calculations can only estimate actual performance.**

6.1.1 Make initial estimate. To obtain an initial estimate of the type of cushioning and its dimensions needed to protect a particular item, the designer will refer to the peak acceleration-static stress curves referenced in **Appendix B**.

The designer first determines the static stress of the item against the cushioning. Then the designer refers to sets of peak acceleration-static stress curves for the anticipated impact conditions and determines directly the kind and thickness of material required to protect the item. To illustrate the method, the following example is given:

PROBLEM: A 20-pound (9 kg), 15-inch (375-mm) cubical rigid item having a fragility rating of 80 G must be protected from a 30-inch (0.75 m) flat drop. Determine what size of pads of the polyethylene represented by Figure 6-1 is optimum for protection of each face of the item by (a) complete encapsulation, (b) side pads, and (c) corner pads (See paragraph 6.3).

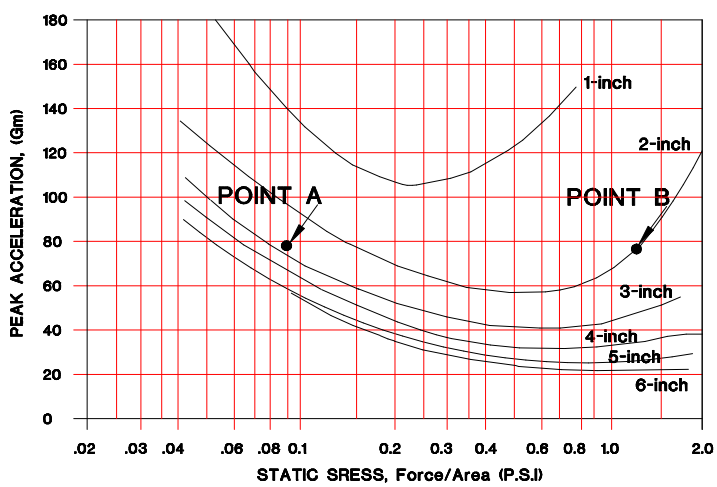

FIGURE 6-1. A Typical Set of Peak Acceleration-Static Stress Curves (Polyethylene, 2 pcf, 30-inch drop height).

SOLUTION: The static stress (force/area) of any side of the item is 20 lbs force /(15x15) in² = 0.09 psi (621 Pa). In Figure 6-1, point "A" represents the coordinated 0.09 psi and 80 g. The curves for the various thicknesses of material indicate that a 3-inch thickness (75 mm) of material is required to protect the item. Thus, if the item is to be encapsulated in cushioning material, a 3-inch thickness (75 mm) of material on all faces is required.

Source: https://assist.dla.mil -- Downloaded: 2016-12-05T12:15Z
Check the source to verify that this is the current version before use.

Three-inch face pads x 15 x 15 inches (75 x 380 x 380 mm face pads), could also be used to protect the item. However, the designer should recognize that these might not be the least size that will furnish adequate protection. In checking the possibility of using smaller face pads, the fragility rating and weight of the item are fixed, but the bearing area of the item against the pad can be changed. Furthermore, the curve for the 2-inch (50 mm) material indicates that adequate protection could be obtained in the static stress range from about 0.14 to 1.30 psi. The maximum savings in material would result from the highest value of static stress (at point "B"), since this would involve the least bearing area (therefore, size of cushion). The required bearing area can be computed by: Force/area = 1.30 psi.

$$A = \frac{20 \text{ lbs force}}{1.30 \text{ psi}} = 15.4 \text{ in}^2 = (3.9 \text{ in})^2$$

Therefore, a set of six 2.0 x 3.9 x 3.9 inch (50 x 100 x 100 millimeter) face pads would suffice.

The use of corner pads provides four small pads for protection against flat drops perpendicular to each face. The required size of each of the three component pads comprising each corner pad would be figured as follows:

$$\frac{15.4 \text{ in}^2}{4} = 3.9 \text{ in}^2$$

Each corner pad should have an area of 3.9 in². If you take the square root of 3.9 in², you will get the dimensions of the corner pad.

$$\sqrt{3.9} \text{ in}^2 = \text{about 2 inches (50 millimeters)}$$

The dimensions of the corner pad would be 2 x 2 x 2 inches or 50 x 50 x 50 millimeters (Figure 6-2A). For added protection against bottoming during corner-wise impacts, it is usually prudent to fill the void spaces along the edges (Figure 6-2B).

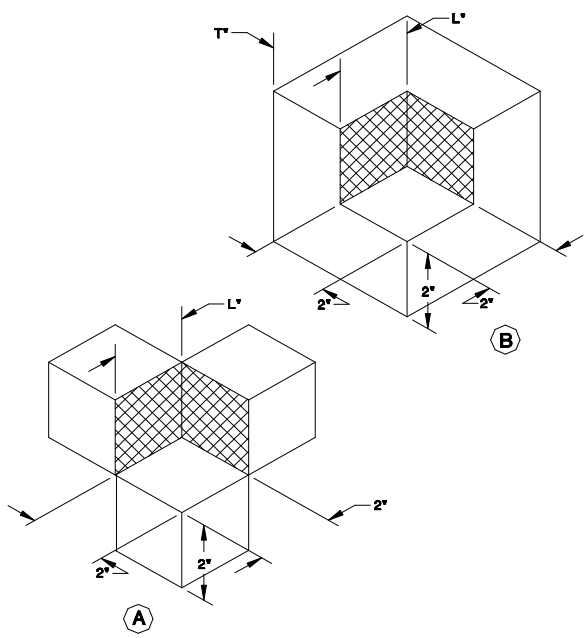

FIGURE 6-2. Corner pads according to the problem
A, with void spaces along edges.
B, without void spaces along edges.

Source: https://assist.dla.mil -- Downloaded: 2016-12-05T12:15Z
Check the source to verify that this is the current version before use.

6.1.2 Material identification. For convenience, the materials for which stress-strain, peak acceleration-static stress curves, and transmissibility curves which are referenced in Appendices A-C are identified by the following numbers. (See Table VIII).

TABLE VIII
Appendices A-C Materials Listing

NUMBER	MATERIAL	DENSITY (pcf)	DENSITY (kg/m^3)
1	Polyurethane-Ether (MIL-PRF-26514)	1.5	24.0
2	Polyurethane-Ether (MIL-PRF-26514)	2.0	32.0
3	Polyurethane-Ether (MIL-PRF-26514)	4.0	64.0
4	Polyurethane-Ester (MIL-PRF-26514)	1.5	24.0
5	Polyurethane-Ester (MIL-PRF-26514)	2.0	64.0
6	Polyurethane-Ester (MIL-PRF-26514)	4.0	64.0
7	Bound Fiber (Rubberized Hair) PPP-C-1120	Type II	
8	Bound Fiber (Rubberized Hair) PPP-C-1120	Type III	
9	Bound Fiber (Rubberized Hair) PPP-C-1120	Type IV	
10	Polyethylene Foam (PPP-C-1752)	2.0	32.0
11	Polyethylene Foam (PPP-C-1752)	4.0	64.0
12	Polystyrene Foam (PPP-C-850)	1.5	24.0
13	Polystyrene Foam (PPP-C-850)	2.5	40.0
14	Polyethylene, Chemically Crosslinked	2.0	32.0
15	Convoluted Ether Polyurethane-1", 2", 3"	1.1	17.6
16	Convoluted Ether Polyurethane 2", 4", 6"	1.1	17.6
17	Convoluted Ether Polyurethane-1", 2", 3"	1.5	24.0
18	Convoluted Ether Polyurethane-2", 4", 6"	1.5	24.0
19	Cellulose Wadding		
20	Air Encapsulated Film, .5" ply thickness (PPP-C-795)	0.69	11.0
21	Hexagonal Film, Open Cell (PPP-C-1842)	1.40	22.4
22	Hexagonal Film, Reinforced Cell (PPP-C-1842)	1.80	28.8

6.1.3 Select cushioning application method. Once the designer has made an initial estimate of the amounts of different kinds of cushioning that will protect the item, their next step in the design should be to compute the cost (see paragraph 5.7) related to the use of the different materials and application methods. The designer can then select the most suitable material and application method. Some of the most common application techniques involve complete encapsulation, corner pads, and face pads. These and various other application techniques are discussed in the paragraphs and sub-paragraphs of 6.3.

6.1.4 Check for buckling (if pertinent). Long, slender cushions may tend to buckle, instead of becoming uniformly compressed, when subjected to a compressive force applied along the lengthwise axis of the cushion. Generally, this is undesirable because the item might tip (Figure 6-3) and become damaged as a result of collision of the item with the container. (NOTE: Under certain circumstances, controlled buckling in cushioning can be desirable). For impacts where buckling occurs, the data from Peak Acceleration--Static Stress cushioning curves becomes invalid and damage is likely to occur. In order to preclude the chance of buckling, if the designer

Source: https://assist.dla.mil -- Downloaded: 2016-12-05T12:15Z
Check the source to verify that this is the current version before use.

is using long slender cushions, they should use the following formula to determine if buckling is likely to occur. Normally, a cushion will be relatively stable if:

$A_{min} > (1.33T)^2$ **(6:1)**

where T is the original thickness of the cushioning material and A_{min} is the minimum bearing area that will insure stability of a cushion. No buckling should occur if A_{min} is greater than $(1.33T)^2$.

CAUTION: Although economy of cushioning design might dictate reduction of cushioning bearing area to a minimum, the designer must insure that the load-bearing portion of the item can withstand the resultant stress (1), (15).

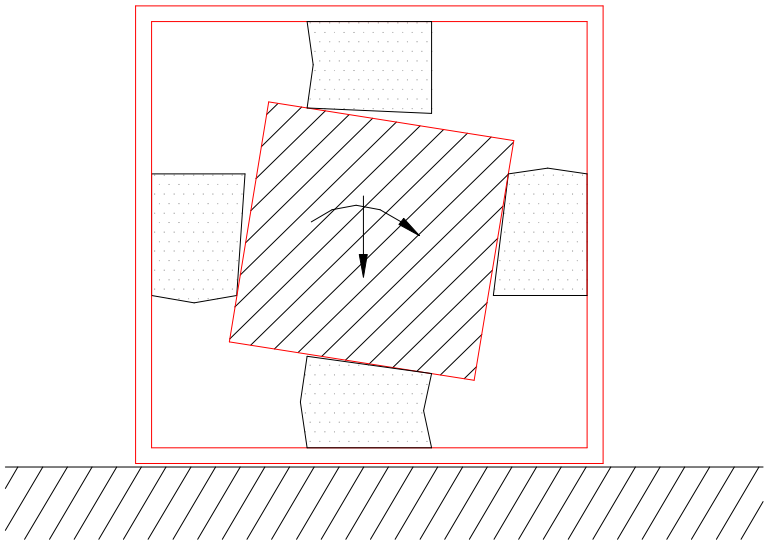

Figure 6-3. Columnar buckling of cushion.

6.2 Vibration Design Procedure. For vibration consideration, the package designer needs to check to make sure that the static loading which they selected for shock design does not conflict with vibration design. If the static loading from the shock design matches the natural frequency or high point of the transmissibility curve, the design will most likely fail because the package will shake apart if it sees that frequency during transportation.

6.2.1 Example: The package designer chose 4-inch, 2 pound density Polyurethane Ether. The static loading best for shock is 0.18 psi. The expected mode of transportation is by truck or by air. From looking at the charts in Section 4.0, the frequencies which generate over 0.5 G's acceleration are expected are from under 20 Hz and above 100 Hz. The maximum transmissibility factor can be 5.0. (For testing purposes, the general rule of thumb for transmissibility factor is 5.0). See Figure 6-4.

By looking at the transmissibility curve for 4-inch, 2 pound density Polyurethane Ether at 0.18 psi, we can see that the worst frequency (or the natural frequency) is at about 27 Hz. If the package system were to see this frequency, the transmissibility would be 6.0, or if the transportation input was 3 G's the package would see 18 G's repeatedly. This would most likely cause package damage. Since the expected frequencies for transportation do not normally fall within the 25 Hz range, this design should be acceptable for vibration. If the transmissibility factor was determined to be over 5.0, the package designer would have to redesign the package with another material or

Source: https://assist.dla.mil -- Downloaded: 2016-12-05T12:15Z
Check the source to verify that this is the current version before use.

a different static stress and then check the transmissibility factor again. **In all cases, it is very important to perform actual vibration tests of packaging configurations, as the theoretical calculations can only estimate actual performance.**

Once the static loadings which appear to provide adequate shock and vibration protection have been identified, material and thickness selections can be made. The actual static loading which is chosen for the package is dependent upon several factors, however designing at the highest possible static loading means using less material. When other considerations such as compressive creep are important, designing at the lowest possible static loading may be warranted.

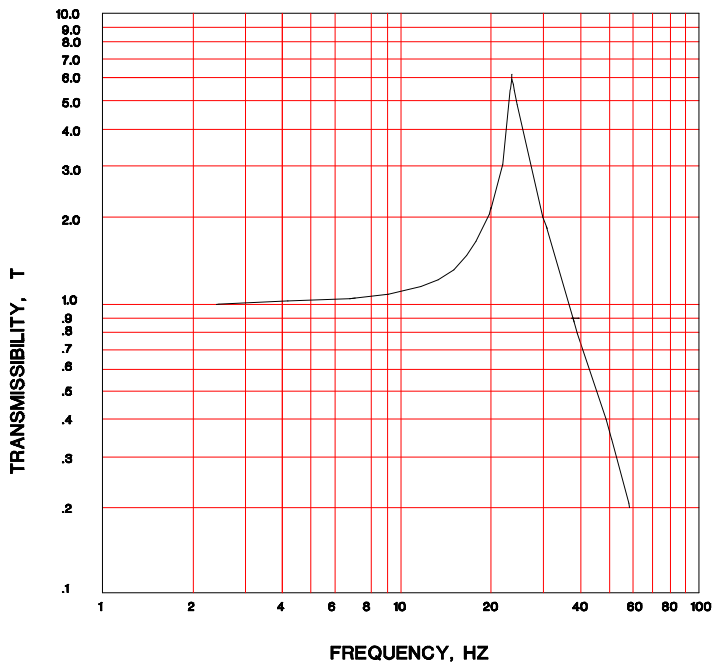

FIGURE 6-4. Polyurethane Foam (Ether). 2 PCF, 4-Inch Material Thickness, .18 PSI Static Stress.

6.3 Cushioning Application Techniques.

Selection of the most advantageous cushioning application techniques for any particular problem requires consideration of various factors. Especially the nature of the item and the cost related to each technique. Hopefully, this chapter not only provides examples of usable application techniques, but also inspires other creative design solutions.

6.3.1 Common Application Techniques.

6.3.1.1 Complete Encapsulation.
In complete encapsulation, the designer covers the entire surface of the item with cushioning material. There are two primary encapsulation techniques. These are cushion wraps (wrap item in cushioning) and cushion pads (cover container interior with 6 precut pads) (Figure 6-5A). Note: When you use pads, leave approximately 1/8 inch clearance between each pad. This prevents binding.

6.3.1.2 Corner Pads.
Properly designed corner pads (Figure 6-5B) effectively protect items with square corners (or irregularly shaped items within an interior container).

Source: https://assist.dla.mil -- Downloaded: 2016-12-05T12:15Z
Check the source to verify that this is the current version before use.

6.3.2 Area Adjustment Techniques.

Use of a cushioning material in its optimum load-bearing range often requires the use of a pad size different from the full bearing area of the item. In this case ensure that the static stress (psi) loading allows proper compression of the cushioning and at the same time prevents over compression (bottoming out) during impact. This section identifies common area adjustment techniques which allow proper static stress loading.

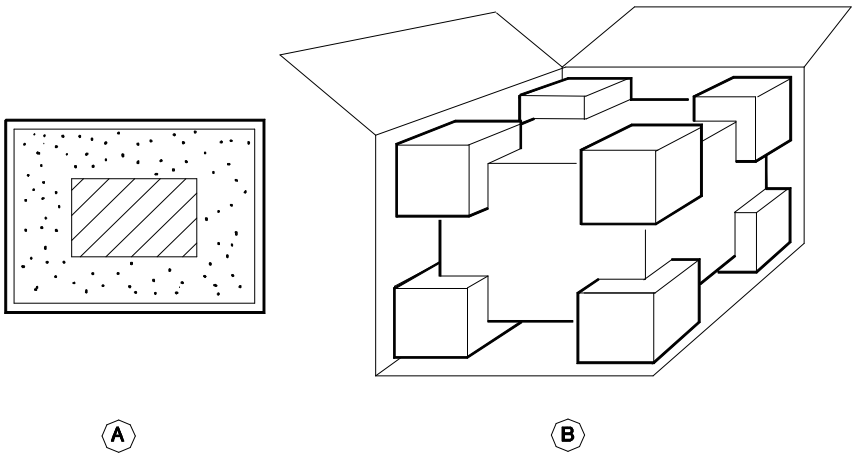

FIGURE 6-5. Common cushioning application techniques. A, Complete Encapsulation, B, Corner Pads.

6.3.2.1 Increased Bearing Area.

The principal devices that increase the load-bearing area of an item against a cushion are load spreaders. These are usually fabricated out of solid or corrugated fiberboard, or plywood platens (Figure 6-6). Make sure you chose a material that adequately distributes the load and prevents excessive flex.

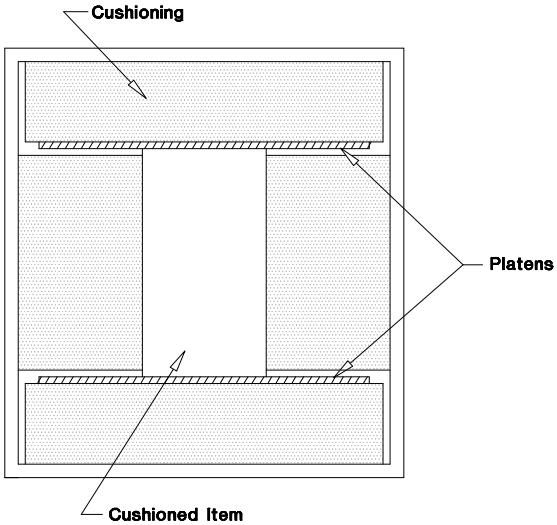

FIGURE 6-6. Load Spreaders used to increase the bearing area of an item against cushions.

Source: https://assist.dla.mil -- Downloaded: 2016-12-05T12:15Z
Check the source to verify that this is the current version before use.

6.3.2.2 Decreased Bearing Area. The most common bearing area reduction technique is simply a reduction in pad size. However, prevention of unwanted rotation is sometimes very troublesome. Three possible solutions to this problem include the use of (1) Corner Pads (Figure 6-5B), (2) Glued Face Pads, and (3) Complete Encapsulation in Convoluted Material (Figure 6-7). The use of convoluted material (usually polyurethane foams) effectively decreases the bearing area, since the item rests only on the peaks of the convolutions. More foam material bearing area is in use when the convoluted cushioning material is in compression.

6.3.2.3 Cushioning Irregularly Shaped Items. The cushioning of irregularly shaped items often presents special problems, especially when projections are fragile. The methods in this section fall into two general categories: (1) Direct Flotation or Encapsulation, and (2) Immobilization and Cushioning. Regardless of the method you use, you must ensure adequate cushioning thickness. Otherwise, the potential exists for damage to the projection due to the bottoming out of the cushion. Therefore measure the clearance from the outer container to the outermost projection (Figure 6-8), not the item body. Unfortunately, many times the designer overlooks this consideration, especially in the production of molded cushions.

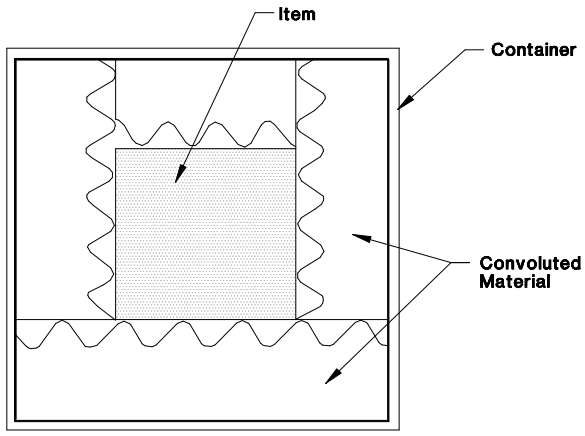

FIGURE 6-7. Convoluted material used to decrease bearing area.

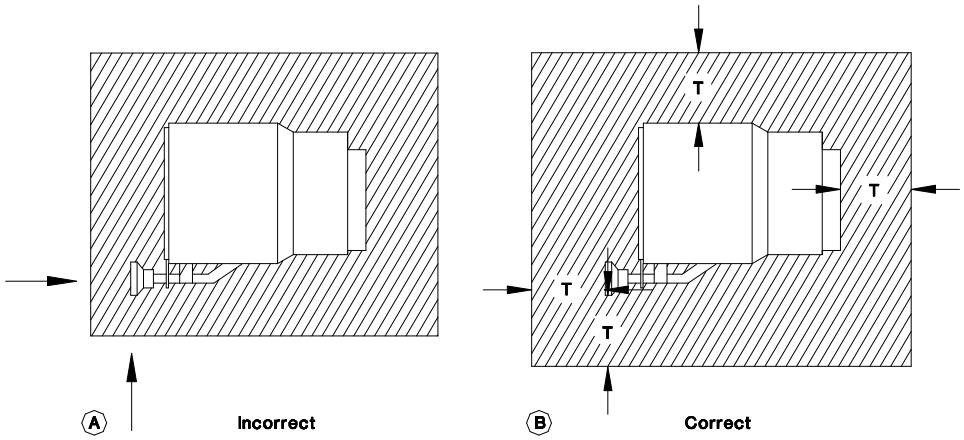

FIGURE 6-8 Cushioning of an item with projections.

Source: https://assist.dla.mil -- Downloaded: 2016-12-05T12:15Z
Check the source to verify that this is the current version before use.

6.3.2.4 Floating Items in Cushioning Material.

6.3.2.4.1 Pre-cut Sheet Stocks. Small, lightweight, irregularly shaped items lend themselves very well to flotation or complete encapsulation. A wide variety of cushioning and wrapping materials are satisfactory for applications of this nature. Figure 6-9 illustrates the use of precut pads to encapsulate an irregularly shaped item.

6.3.2.4.2 Use of Molded Pads. Another alternative technique for irregularly shaped items is molded pads. There are many moldable resins available for pads of this kind (i.e., Foam-In-Place, Polyethylene, Copolymers, Polypropylene, etc.). Figure 6-10 illustrates an example of a molded pad.

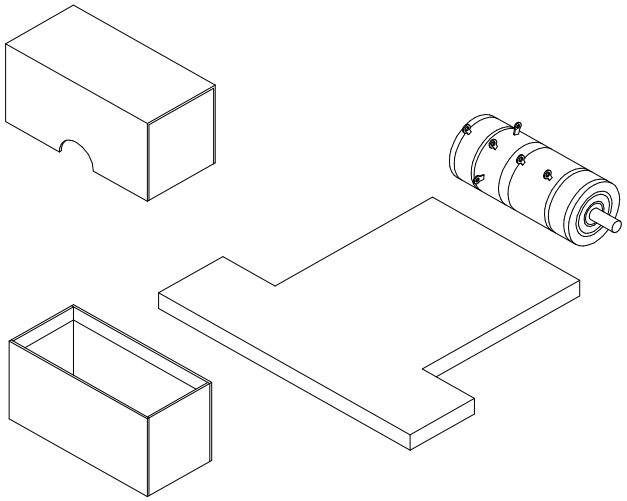

FIGURE 6-9 Use of precut pad to float irregularly shaped item.

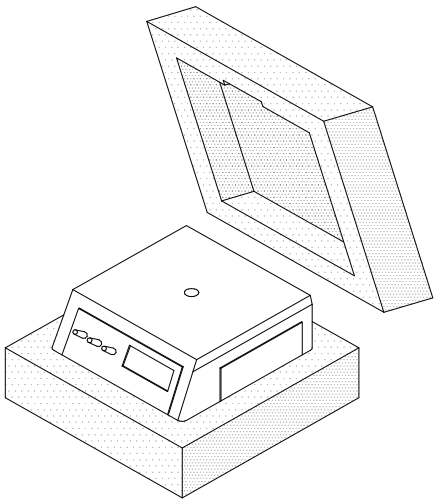

FIGURE 6-10. Use of molded pads.

Source: https://assist.dla.mil -- Downloaded: 2016-12-05T12:15Z
Check the source to verify that this is the current version before use.

6.3.4.3 Immobilizing the Item in an Interior Container. Some items have fragile protrusions that extend beyond the main body of the item. Examples may include knobs, switches, arms, extended necks, etc. (Figure 6-11). Items of this nature often require internal blocking and bracing in fiberboard, plywood, etc., before application of cushioning (Figure 6-11). Often this technique includes the placement of the blocked and braced item into an internal fiberboard container. This procedure, often called "Box-in-a-Box", not only protects the exposed fragile elements, but also provides a simple rectangular shape for uniform load distribution and simplification of design calculation. See MIL-STD-1186 for a guide on blocking, and bracing, and anchoring techniques.

Some of the more common immobilization techniques are:

(1) Fiberboard pads and die-cut inserts (Figure 6-11).
(2) Molded or cut rigid materials, such as certain types of expanded polystyrene or foamed polyurethane (Figure 6-12).
(3) Corrugated fiberboard blocking (Figures 6-13).
(4) Corrugated fiberboard blocking and wood anchoring base. (Figure 6-14).
(5) A combination of materials. (Figure 6-15).

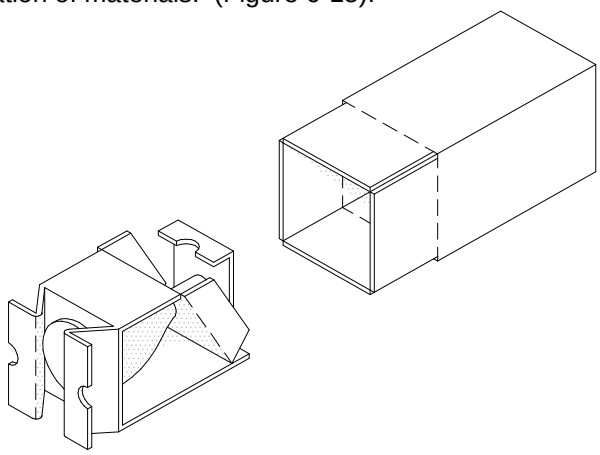

FIGURE 6-11. Use of folded die-cut corrugated fiberboard to immobilize item.

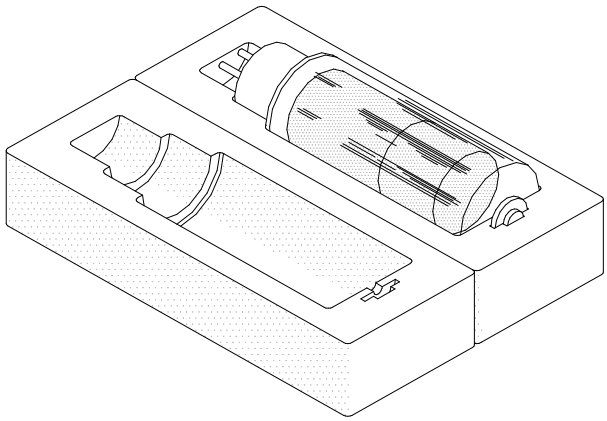

FIGURE 6-12. Use of molded or cut rigid material to immobilize item.

Source: https://assist.dla.mil -- Downloaded: 2016-12-05T12:15Z
Check the source to verify that this is the current version before use.

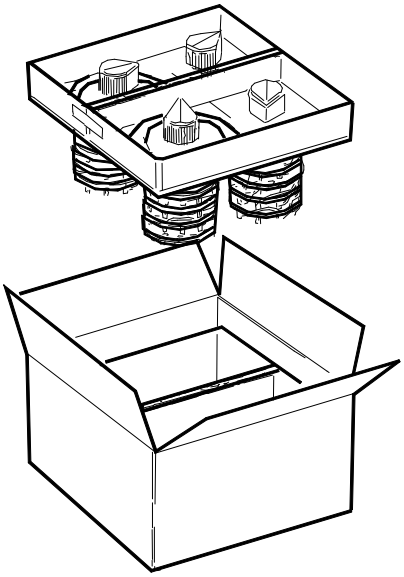

FIGURE 6-13. Use of corrugated fiberboard blocking to immobilize fragile items.

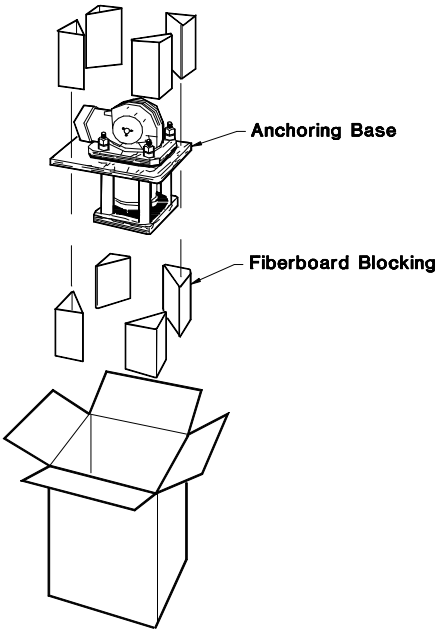

FIGURE 6-14. Use of corrugated fiberboard blocking and wood anchoring base to immobilize item.

Some items, such as the delicate electronic tube in Figure 6-15, require a combination of immobilization materials. This large glass envelope that houses a massive rotating anode. The most delicate portion of the item is the collar where the glass joins the metal shaft. Use of ordinary cushioning procedures results in the application of the acceleration force directly on the most fragile portions of the tube. Figure 6-15 illustrates one potential solution for packaging this

Source: https://assist.dla.mil -- Downloaded: 2016-12-05T12:15Z
Check the source to verify that this is the current version before use.

item. The wooden collar immobilizes the metal element within the relatively rigid molded polystyrene pad.

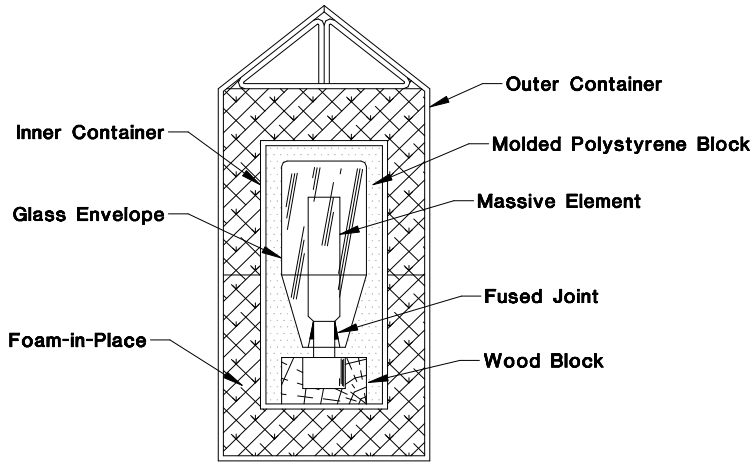

FIGURE 6-15. Use of a combination of materials to immobilize and cushion item.

6.4 Application of Dunnage.

6.4.1 Filling Voids.

6.4.1.1 Loose Fill. Until recently military packagers used loose-fill dunnage materials extensively. Many problems surfaced with the use of this dunnage material. Now this material is not recommended for military use. One problem with loose fill was the shifting of the item within the package so that no cushioning protection was available. Also, foreign object debris (F.O.D.) on the flight line was a problem. For example, polystyrene peanuts may find their way into the aircraft engine causing costly damage upon engine start-up.

6.4.1.2 Wrap Materials. Many wrap materials such as polyethylene, polyurethane, and polypropylene foams, flexible cellular plastic films (PPP-C-795 and PPP-C-1842), and thin-sheet polypropylene foam (PPP-C-1797), are also acceptable for void fill. The packer simply wads up several sheets and forces them into the void.

6.4.2 Padding projections. Generally, when there are sharp protrusions the designer wraps them with one of the above wrap materials for additional protection.

6.5 Miscellaneous Application Techniques. Satisfactory cushioning application techniques for certain kinds of items often involve consolidation or separation of parts and the use of a variety of materials and application techniques. Some examples of such applications are as follows:

6.5.1 Nesting Items between Layers of Cushioning Material. The nesting technique (Figure 6-16) works well for packaging of a series of relatively small, similarly shaped items. Section 5.0 identifies proper material selection procedures for applications of this nature.

6.5.2 Disassembly of Large, Fragile Items. Occasionally, you must separate fragile components from the item and package them individually. The principal advantage of this technique is that it is

Source: https://assist.dla.mil -- Downloaded: 2016-12-05T12:15Z
Check the source to verify that this is the current version before use.

more cost effective when you provide extra protection to only those components that require it. However, ensure you have proper authorization prior to disassembly.

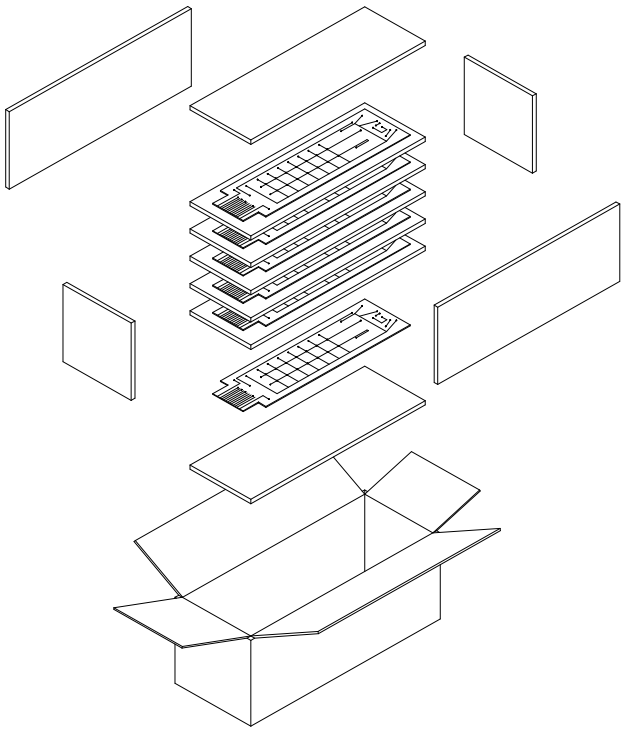

FIGURE 6-16. Nesting items in cushioning material.

6.5.3 Use of Cushioning Materials to Prevent Abrasion. Certain items have polished or painted surfaces that require protection from abrasion during shipment. In many applications cushioning materials provide adequate abrasion protection.

Figure 6-17 depicts one example where cushioning prevents abrasion on the electronic console from the strapping. Adhesive-backed foamed plastics, heavily wax-coated corrugated fiberboard, or wrap materials also are suitable for similar applications.

6.5.4 Cushioned Bases or Pallets. In cases of large, heavy items consider attachment to a cushioned base or pallet (Figure 6-17). Since these items remain upright during shipment they require only bottom cushioning. In addition to its role as shock and vibration isolator, the cushioned base serves as an integral part of the container.

6.5.5 Foam-In-Place. Many types of polyurethane foams, both rigid (for blocking and bracing) and flexible, are available in foam-in-place form. (See MIL-PRF-83671 for more information). Foam-in-place techniques permit creation of a cushion that completely surrounds the actual item.

This process requires special dispensing equipment that mixes the two foam chemicals in proper proportions that expands and produces a polyurethane foam cushion. This technique is especially effective for applications where the design of a custom package is cost prohibitive. Even though these materials can be used for complete product encapsulation, there are many other applications for which foam-in-place may be used.

Source: https://assist.dla.mil -- Downloaded: 2016-12-05T12:15Z
Check the source to verify that this is the current version before use.

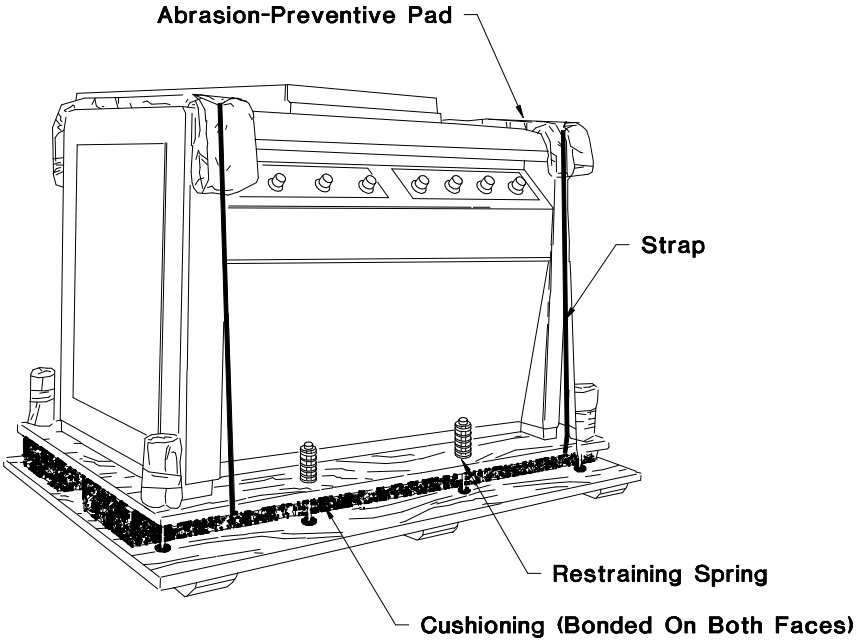

FIGURE 6-17. A cushioned base.

Source: https://assist.dla.mil -- Downloaded: 2016-12-05T12:15Z
Check the source to verify that this is the current version before use.

7.0 CUSHIONING DESIGN PROCEDURES

7.1 Cushioning Design Procedure Summary.

Rational cushioning design requires consideration of many factors as listed in Section 5.0. Therefore, the following Container Development Procedures given in Table III provide a summary of the steps required in the cushion design procedure. A typical comprehensive cushioning problem follows in paragraph 7.2.

7.2 Comprehensive Sample Problem.

Twenty video display units are to be repackaged individually for shipment to various locations worldwide in moderate but known conditions. Each package must contain sufficient cushioning to allow the item to withstand flat and cornerwise drops. The item size is 20x20x16--inches (0.51x0.51x.41--meters) and the item weight is 40 lb (18 kg). The item can withstand up to 40 G's. The item is used for deployment, and the expected number of trips for the item is 40. Each trip is estimated at 1200 miles mostly by truck, some by air. The estimated gross weight of the container and its contents is 60 lb using a plastic container (See reasoning in Step 5). Determine the most economical cushioning design and interior container size.

SOLUTION: (by procedure of Table III)

Step (1) Define the Shipping, Handling, and Storage Environment
Level B -- Moderate worldwide shipment, known conditions, moderate value
Gross Weight (Shipping Weight): 60 pounds (27 kilograms)
Look at Table IV
Drop Height -- 24" (0.6 meters)
Estimated Shipping: 1200 miles, Truck

Step (2) Determine Item Characteristics
Dimensions -- 20" x 20" x 16" (0.51x0.51x.41--meters)
Fragility -- 25 G's
Item Weight -- 40 pounds (3.4 kg)
Moderate Value
Quantity -- 20

Step (3) Product Redesign
Comparing the moderate value of the item with low cost of Level B packaging and since the production rate is not high, little prospect exists for appreciable savings by refining the item's design.

Step (4) Design Cushioning System
The package designer can work the problem solving for each material and then determining which is the best material based on cost, material characteristics and the container size based on the Peak G/Static Stress Curves in Appendix B. The package designer could also work the problem using "Package Designer" software (See 7.3). The designer would then choose the best material based on cost, material characteristics and the container size from the solutions given in the results. *(Suggestion: If you do use the computer program, it is best to work out in long hand your top picks to determine the best material. Remember to look at other cushioning characteristics from Section 5.0 when choosing a material.)*

See Figures 7-1 and 7-2 for the computer solutions of this problem. There are 13 complete encapsulation solutions and 10 cornerpad solutions for this problem. To save on space, only the

Source: https://assist.dla.mil -- Downloaded: 2016-12-05T12:15Z
Check the source to verify that this is the current version before use.

top three picks of each configuration are shown here. (Note that fiberboard is listed as the exterior container in the program. Even though the computer program does not have plastic as an option, it is still the choice for the exterior container because of the environmental conditions the video display unit will encounter. The type of exterior container does not effect the outcome of the cushioning design.)

Note: After the package designer has completed their design, it is essential testing be performed to ensure that the container system will withstand the expected container life and the predicted environments.

TABLE IX
Analysis of Best Materials.

Cushion Material	Cushion Dimensions (Inches)	Interior Cntr. Dimensions (Inches)	Config.	Cost
Polystyrene, 1.5 pcf	2.8”x2.8”x3, 2.8”x2.8”x3, 2.8”x2.8”x3	26”x26”x21”	Corner-pad	$19.50
Polyurethane, 1.5 pcf	3.7”x3.7”x3”, 3.7”x3.7”x3”, 3.7”x3.7”x3”	26”x26”x21”	Corner-pad	$22.21
Polystyrene, 2.5 pcf	2.3”x2.3”x4”, 2.3”x2.3”x4”, 2.3”x2.3”x4”,	28”x28”x23”	Corner-pad	$22.49
Polyurethane Ether, 1.5 pcf	20”x20”x2”, 20”x20”x2”, 20”x24”x2”	24”x24”x20”	Complete Encap.	$24.47
Polyurethane Ether, 2 pcf	20”x20”x2”, 20”x20”x2”, 20”x24”x2”	24”x24”x20”	Complete Encap.	$26.36
Rubberized Hair, Type III	20”x20”x2.5”, 20”x20”x3”, 21”x26”x3”	26”x26”x21”	Complete Encap.	$29.43

-- Decision: The cornerpad solutions are the most economical. Although, the container size is slightly smaller with complete encapsulation. Because the container is plastic, the cost differential will be higher than with fiberboard, so a smaller container is more desirable. Because the container size is not much larger, the designer talks to the user. They would like the least cube as possible because they will be deploying with this piece of equipment and they need all the room they can get. The choice is complete encapsulation in Polyurethane Ether, 1.5 pcf.

Step (5) Design the Package System
The interior dimensions of the container using Polyurethane-Ether 1.5 pcf are 24” x 24” x 20”. Because the video display units are being deployed in these containers and the field predicts many trips, this package designer chooses plastic containers for their added durability and moisture resistance over fiberboard.

Step (6) Test the Package/Cushioning System
Instrumented drop tests of a complete package containing a dummy item and cushioning, from a height of 24 inches (0.60 meters), yield the following results: Flat drop (on bottom)--29 G; flat drop (on end)--35 G; and corner-wise drop--33 G.

Based upon the test results, it is decided to accept the design. The accepted cushioning design is not excessively conservative because some safety margin is desirable to hedge against variation in material performance and the severity of service handling conditions.

7.3 Cushion Design by Computer.

Source: https://assist.dla.mil -- Downloaded: 2016-12-05T12:15Z
Check the source to verify that this is the current version before use.

7.3.1 Reasons for Computer Design. The design procedures outlined in preceding sections of this chapter are, of necessity, detailed and often tedious. If all design possibilities are fully considered, including the many cushion materials, and comparative labor and transportation costs, the design procedure becomes very time-consuming. In fact, if this process is carried to the extreme of finding the absolute optimum design, the expense of the packaging engineer's labor may become a significant percentage of total package costs.

7.3.2 "Package Designer" Ordering Data. A means by which these calculations may be simplified is available through a program which has been developed by the Air Force Packaging Technology and Engineering Facility (AFPTEF), Wright-Patterson AFB, in cooperation with Frontier Engineering, Inc., to find the most economical package cushioning design considering all of the parameters discussed above. The program called "Package Designer" is described in 7.3.3.

U.S. Government offices may obtain the program by contacting:

AFMC LSO/LOP, 5215 Thurlow Street, Wright-Patterson AFB OH 45433
937-257-4519 or DSN 787-4519, FAX 937-656-1350 or DSN 986-1350.

U.S. industry and foreign government/industry may obtain the program by submitting a request to:

Federal Computer Products Center, National Technical Information Service (NTIS)
U.S. Department of Commerce, 5285 Port Royal Road, Springfield VA 22161
703-487-4650, FAX 703-321-8547
Order #PB95-500369GE1

7.3.3 Cushion Design Program.
"Package Designer" is a cushion design program which generates design information on peak acceleration for an existing cushion pack and assists in the design for complete cushioning encapsulation of an item and corner-pad cushioning design of an item. Each of the options consider drop heights, dimensions, weight, fragility, container type, container materials, cost and mode of transportation. Costs and output results are either displayed to the screen or to both the screen and printer. An option is provided to make changes to the current input data and then rerun the analysis.

The materials listed in the program are the same materials whose Peak Acceleration versus Static Stress curves are shown in Appendix B of this Handbook.

7.3.3.1 Basic Functions. "Package Designer" performs two basic functions. The first function is a performance evaluation of a known package design or the determination of the package design for a specific item under known conditions. The second function lets the designer choose the cushion configuration. The first function (*peak acceleration*) is to determine the performance (*fragility rating*) of an existing package design. The package designer inputs information on the desired drop height, kind of material, weight, surface area (one fact at a time), and cushion thickness. The computer response (output) is in terms of the peak acceleration (fragility) that the packaged item would experience. The process can be repeated as often as necessary to evaluate all surfaces of the item and for different materials and drop heights.

The designer now uses the cushion configuration option. The designer chooses either corner pad or complete encapsulation. With these options, the packaging engineer can essentially design the total package. For each option the drop height, item dimensions, item weight, fragility, container style and material, and transportation mode and distance are the required input. The program then computes total costs for all materials available. If a particular material is not feasible for an item (i.e., the cushion characteristics show that the cushion will not protect the item), it is not printed. All feasible materials are printed in order of increasing cost.

Source: https://assist.dla.mil -- Downloaded: 2016-12-05T12:15Z
Check the source to verify that this is the current version before use.

Complete design data can then be obtained by inputting the number of the material desired. This data includes cushion dimensions (depending on complete encapsulation or corner pads), container dimensions (Inner Dimensions), total package weight, and costs for cushioning materials, container, transportation, and labor. This step may be repeated for all materials which were considered feasible in the initial cost table. The complete data input procedure must be repeated for each additional option and for each separate material.

7.3.3.2 Computer Solution Advantages.

"Package Designer" provides many benefits. The program is Windows compatible and is user-friendly. The container designer is able to see the graph of the curve and the area of concern. Also the program will have on-line help and the ability to use a mouse. Because the program is in Windows, the user will be able to "click" on the various characteristics they want and then save them to a file for later use. The major advantage of the computer program is time savings. Generally, the design procedure can be carried out in a few minutes instead of the several hours required using the manual computational techniques.

Source: https://assist.dla.mil -- Downloaded: 2016-12-05T12:15Z
Check the source to verify that this is the current version before use.

Figure 7-1
Package Designer Analysis Results
Complete Encapsulation

Package Designer - Package Design Results

02-Apr-97 — *13 Solutions*

Item Dimensions				Fragility	Drop Height (in.)	Encapsulation Type
Length (in.)	Width (in.)	Height (in.)	Weight (lbs.)	Top (G) 40.00	24.00	Complete Encapsulation
20.00	20.00	16.00	40.00	Side (G) 40.00	Container Type	Container Material
Shipped by: Truck			Distance: 1200	End (G) 40.00	RSC	Double Wall V-11C

Cushion Material
Polyurethane-Ether 1.5 lb/cubic ft.

Cushion Dimensions

	Length (in.)	Width (in.)	Thickness (in.)	Stress (psi)
Top	20.00	20.00	2.00	0.10
Side	20.00	20.00	2.00	0.13
End	20.00	24.00	2.00	0.13

Container Dimensions

Length (in.)	Width (in.)	Height (in.)	Weight (lb.)
24.00	24.00	20.00	8.32

Costs	
Cushion	$6.97
Cushion Cutting	$0.07
Container	$4.03
Closing	$0.70
Tape	$0.10
Shipping	$12.60
Total Cost	$24.47
Total Weight	52.76 lbs.

Cushion Material
Polyurethane-Ether 2 lb/cubic ft.

Cushion Dimensions

	Length (in.)	Width (in.)	Thickness (in.)	Stress (psi)
Top	20.00	20.00	2.00	0.10
Side	20.00	20.00	2.00	0.13
End	20.00	24.00	2.00	0.13

Container Dimensions

Length (in.)	Width (in.)	Height (in.)	Weight (lb.)
24.00	24.00	20.00	8.32

Costs	
Cushion	$8.85
Cushion Cutting	$0.07
Container	$4.03
Closing	$0.70
Tape	$0.10
Shipping	$12.60
Total Cost	$26.36
Total Weight	54.25 lbs.

Cushion Material
Rubberized Hair Type III

Cushion Dimensions

	Length (in.)	Width (in.)	Thickness (in.)	Stress (psi)
Top	20.00	20.00	2.50	0.10
Side	20.00	21.00	3.00	0.13
End	21.00	26.00	3.00	0.13

Container Dimensions

Length (in.)	Width (in.)	Height (in.)	Weight (lb.)
26.00	26.00	21.00	9.58

Costs	
Cushion	$11.23
Cushion Cutting	$0.07
Container	$4.62
Closing	$0.79
Tape	$0.10
Shipping	$12.60
Total Cost	$29.43
Total Weight	56.34 lbs.

Note: To save on space, only the top three picks are shown in the handbook. There are 13 solutions total.

Source: https://assist.dla.mil -- Downloaded: 2016-12-05T12:15Z
Check the source to verify that this is the current version before use.

Figure 7-2
Package Designer Analysis Results
Cornerpad

Package Designer - Package Design Results

02-Apr-97 — *10 Solutions*

Item Dimensions				Fragility	Drop Height (in.)	Encapsulation Type
Length (in.)	Width (in.)	Height (in.)	Weight (lbs.)	Top (G) 40.00	24.00	Corner Pad Encapsulation
20.00	20.00	16.00	40.00	Side (G) 40.00	Container Type	Container Material
Shipped by: Truck			Distance: 1200	End (G) 40.00	RSC	Double Wall V11C

Cushion Material
Polystyrene Foam 1.5 lb/cubic ft.

Cushion Dimensions

	Length (in.)	Width (in.)	Thickness (in.)	Stress (psi)
Top	2.76	2.76	3.00	1.31
Side	2.76	2.76	3.00	1.21
End	2.76	2.76	3.00	1.21

Container Dimensions

Length (in.)	Width (in.)	Height (in.)	Weight (lb.)
26.00	26.00	22.00	9.86

Costs	
Cushion	$1.36
Cushion Cutting	$0.03
Container	$4.71
Closing	$0.81
Tape	$0.10
Shipping	$12.60
Total Cost	$19.62
Total Weight	51.04 lbs.

Cushion Material
Polyurethane-Ester 1.5 lb/cubic ft.

Cushion Dimensions

	Length (in.)	Width (in.)	Thickness (in.)	Stress (psi)
Top	3.65	3.65	3.00	0.75
Side	3.65	3.65	3.00	0.91
End	3.65	3.65	3.00	0.91

Container Dimensions

Length (in.)	Width (in.)	Height (in.)	Weight (lb.)
26.00	26.00	22.00	9.86

Costs	
Cushion	$4.06
Cushion Cutting	$0.04
Container	$4.71
Closing	$0.81
Tape	$0.10
Shipping	$12.60
Total Cost	$22.33
Total Weight	51.56 lbs.

Cushion Material
Polystyrene Foam 2.5 lb/cubic ft.

Cushion Dimensions

	Length (in.)	Width (in.)	Thickness (in.)	Stress (psi)
Top	2.34	2.34	4.00	1.83
Side	2.34	2.34	4.00	1.07
End	2.34	2.34	4.00	1.07

Container Dimensions

Length (in.)	Width (in.)	Height (in.)	Weight (lb.)
28.00	28.00	24.00	11.53

Costs	
Cushion	$3.49
Cushion Cutting	$0.03
Container	$5.45
Closing	$0.93
Tape	$0.11
Shipping	$12.60
Total Cost	$22.61
Total Weight	54.33 lbs.

Note: To save on space, only the top three picks are shown in the handbook. There are 10 solutions total.

Source: https://assist.dla.mil -- Downloaded: 2016-12-05T12:15Z
Check the source to verify that this is the current version before use.

8.0 CONTAINER/CUSHION SYSTEM TEST PROCEDURES

8.1 Conduct instrumented complete package drop and vibration tests.

The data referenced in Appendix B will give a first estimate of the cushioning performance requirements, but shock and/or vibration tests of the complete package should be conducted before the package design is finally accepted. Some empirical adjustment of cushioning thickness might be indicated by the test results.

The nature of the tests will be dictated by applicable specifications or other pertinent requirements. Recommended techniques for instrumenting the items (or dummy items) for testing of complete packages are given in 8.3.

The peak acceleration-static stress curves in Appendix B were derived according to the test procedure referenced in paragraph 8.2, which is based upon tests involving relatively rigid testing surfaces. Therefore, the effects of container behavior are not included.

Note: The performance of cushioning materials inside complete packages under certain conditions can vary appreciably from the performance exhibited during tests of a cushion pad alone using a cushion testing apparatus (5).

8.1.1 Rebound effects. Immediately after a flat drop, the container usually rebounds to some extent. This phenomenon (Figure 8-1) causes the container (and cushion) to move vectorially opposite to the motion of the item and increases the peak acceleration experienced by the item. The quantitative nature of effects caused by rebound have not been clearly defined but work by the U.S. Forest Products Laboratory indicates that under certain loading conditions (especially where very lightweight items and flat drops are involved) the increase in peak acceleration of the item can be large.

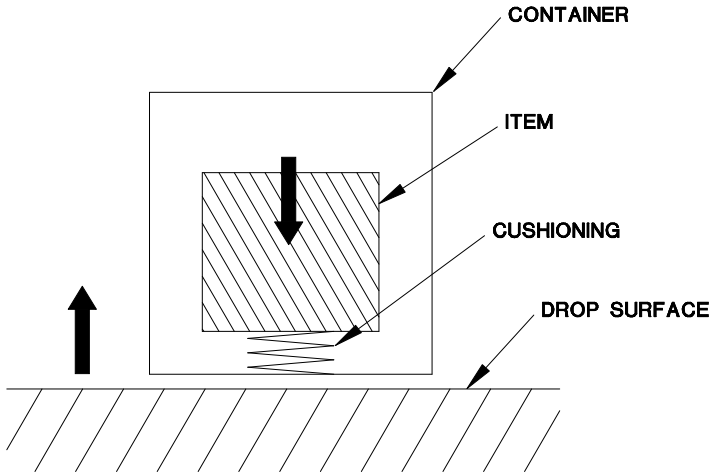

FIGURE 8-1. Container rebound immediately after collision with a rigid surface.

8.1.2 Corner crushing and buckling of sides. In certain instances, especially when relatively flexible containers (some kinds of corrugated fiberboard containers) containing heavy items are dropped on corners or edges, the sides tend to buckle and the corners crush as indicated in Figure 8-2. In this instance, the energy absorption capacity of the supporting cushioning material is partially bypassed, thereby causing the corner of the item to "bottom" and be damaged.

Source: https://assist.dla.mil -- Downloaded: 2016-12-05T12:15Z
Check the source to verify that this is the current version before use.

In other instances, the peak acceleration of items during corner impacts of packages is reduced because the corners crush together with only slight flexure of the sides.

Obviously, the beneficial or deleterious nature of corner crushing and side buckling is dependent upon the stiffness of the container and the amount of applied energy and can best be quantified by specific complete package testing.

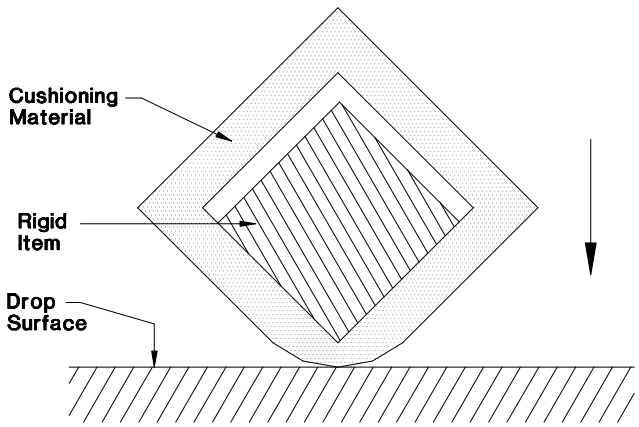

FIGURE 8-2. Buckling of sides during impact of heavily loaded flexible container.

8.1.3 Pneumatic and frictional effects. Since the dynamic compression performance of most cushioning materials is viscoelastic in nature, enclosure of such materials in a container may influence both peak acceleration and static stress loading values. Viscous damping may be increased when the cushion pads are enclosed, thus, restricting air flow within the box and increasing the effective load bearing capability of the pad under rapid loading rates. In addition, frictional (Coulomb) damping may retard movement of the item in relation to the side pads.

8.2 Impact Testing of Instrumented Complete Packages.

8.2.1 Scope.

This section presents methods of instrumentation and data analysis for instrumented impact tests on complete packages. Also, detailed information on instrumentation may be found in Chapters 12 to 20 of (**5**).

These methods provide standard test procedures for evaluating package design effectiveness by simulating the magnitude and characteristics of shock under service conditions. Knowledge of package shock protection and item fragility will permit the packaging engineer to design or select proper item packaging.

Item fragility is expressed in terms of the shock experienced by the base structure of the item. Ideally, a packaged item is a rigid homogenous, highly damped, body. This body ideally experiences a uniform level of shock throughout its structure. In reality, most items will have a more complex response to a shock input with different portions of the item experiencing different levels of shock. Therefore, primary shock input measurement must be made either on this rigid base structure, or on a rigid base attached to the item. If this procedure is not practical, such shock measurements should be made on a simulated test item.

Source: https://assist.dla.mil -- Downloaded: 2016-12-05T12:15Z
Check the source to verify that this is the current version before use.

8.2.2 Outline of Test Method.

An actual or simulated test item is instrumented and packed in the test container. Then the container is subjected to the desired impact test conditions as shown in Figure 8-3. The acceleration versus time pulse received by the item is recorded using accelerometers and associated electronic equipment. Recorded data are analyzed to determine the magnitude of transmitted shock. See ASTM D 5276, “Standard Test Method for Drop test of Loaded Containers by Free Fall”, for detailed procedures.

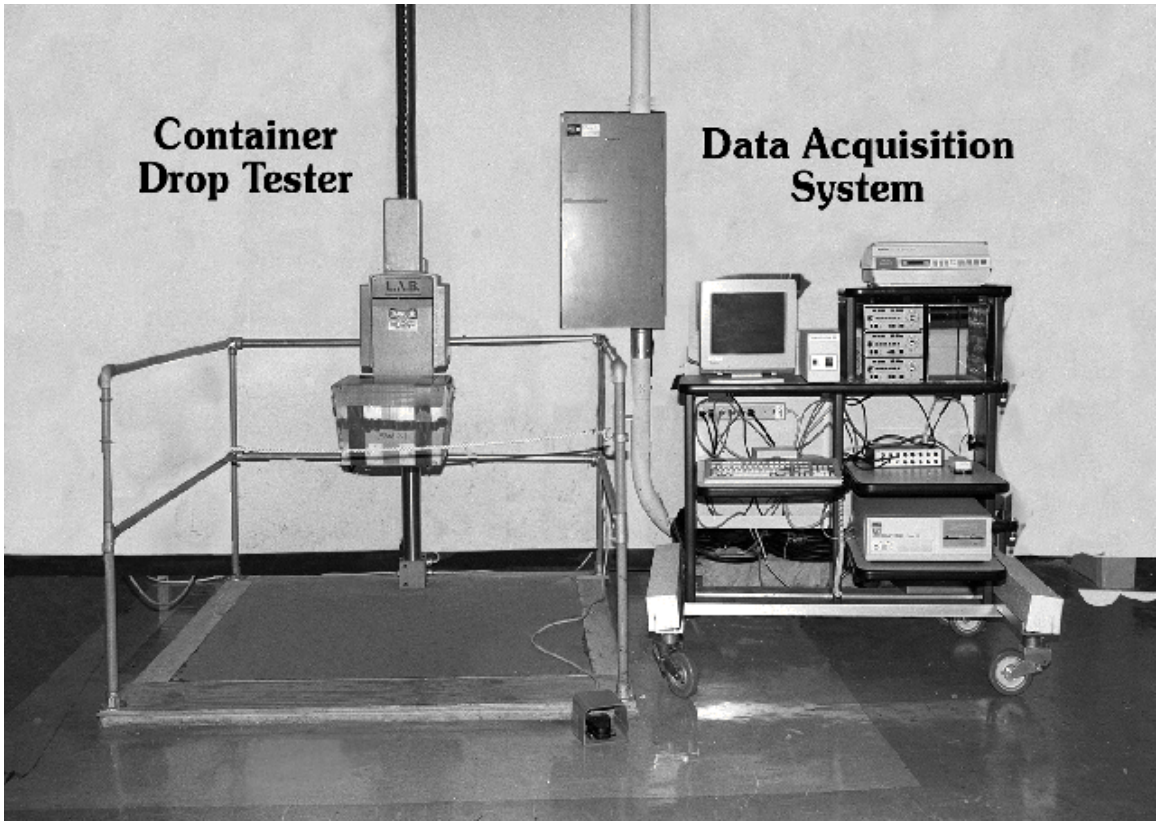

FIGURE 8-3. Container Drop Tester.

8.2.3 Measurement of Displacement.

It is important to determine the relative displacement of an item within a package. If the item displacement is large enough to allow contact between the item and the outer container, damage may occur. If contact occurs, the package cushioning is no longer effective and excessive shocks may be transmitted to the item.

Measurement may be made with sufficient accuracy by use of simple mechanical methods. The deformation of a small block of putty, or the penetration of a pin in a small block of soft material (lead or balsa wood are examples). The energy used in such methods must be kept small to avoid influencing the cushioning characteristics of the package.

Source: https://assist.dla.mil -- Downloaded: 2016-12-05T12:15Z
Check the source to verify that this is the current version before use.

8.2.4 Accelerometer Mounting Considerations.

A transducer is an instrument that converts shock and vibration or other phenomena to a corresponding electrical or mechanical signal. An accelerometer is one type of transducer. Data accuracy and usefulness are directly affected by the mounting method and the accelerometer's location on the test item. As a general rule, the accelerometer should be mounted as close to the test item center of gravity as possible. Its sensitive axis should be on a plane that passes through the center of gravity and directly in line with the applied force.

8.2.4.1 Use of a Single Accelerometer. Acceleration is a vector quantity which has both magnitude and direction but accelerometers are uni-axial sensing devices. Therefore, a single accelerometer should be used only if the direction of the applied shock is controllable and known. Then the sensitive axis of the accelerometer may be aligned in the direction of the applied shock. Some amount of misalignment is tolerable, as the errors produced by small angles of misalignment are very small. The component of acceleration sensed by the accelerometer is:

$$a_S = a_t \cos q \qquad (8:1)$$

where a_t = total acceleration; q = angle of misalignment in degrees; and a_S = acceleration sensed by the accelerometer as shown in Figure 8-4. A table of cosines of angles given in Figure 8-4 shows that for small angles the difference between a_S and a_t will be small.

8.2.4.2 Use of Three Mutually Perpendicular Accelerometers. Containers generally do not drop perfectly in the x, y, or z axes, Therefore, acceleration measurement must be made on three mutually perpendicular axes. The actual acceleration magnitude is determined by the vector summation of these three components. Further discussion of this procedure is given in paragraph 8.2.8.

The three accelerometers should be mounted on a common rigid mounting block as close together as possible with their sensitive axes on three mutually perpendicular planes. These planes should pass through a common point as shown in Figure 8-5.

The mounting block should be firmly attached to the basic rigid structure of the item as close to the item's center of gravity as possible. The farther the accelerometers are from the item's center of gravity, the less representative the measured accelerations will be.

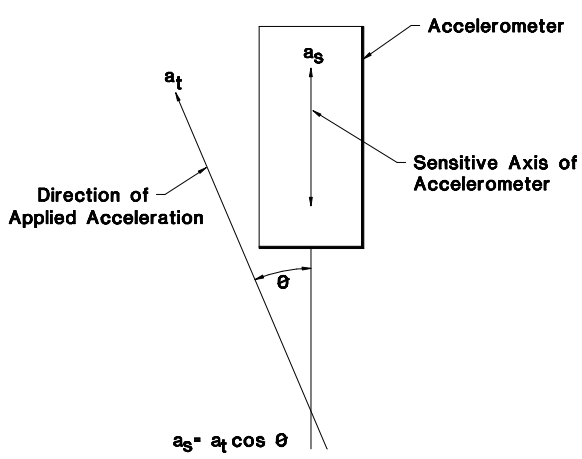

θ (Degrees)	Cosine
1	0.99985
2	0.99939
3	0.99863
4	0.99756
5	0.99619
6	0.99452
7	0.99255
8	0.99027
9	0.98769
10	0.98481
11	0.98163
12	0.97815

FIGURE 8-4. Vector diagram and cosine table indicating effects of accelerometer misalignment.

Source: https://assist.dla.mil -- Downloaded: 2016-12-05T12:15Z
Check the source to verify that this is the current version before use.

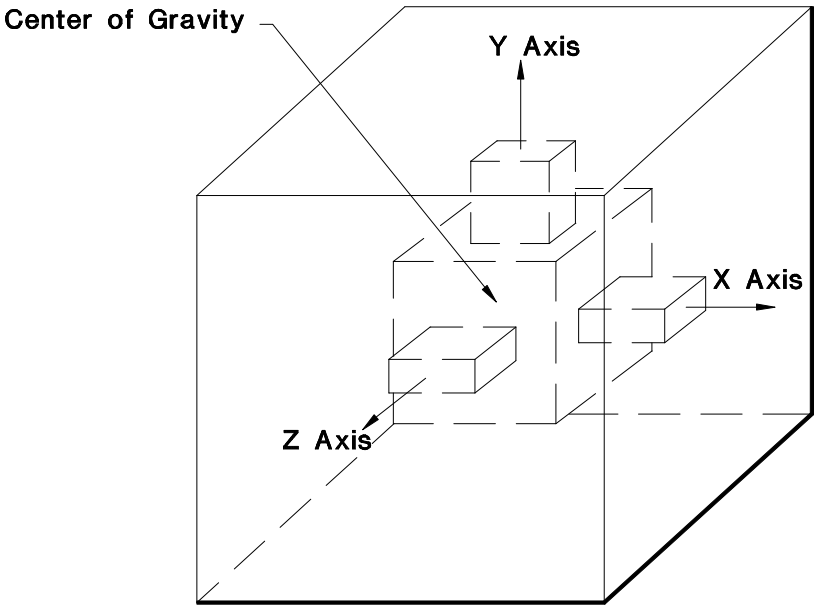

FIGURE 8-5. Recommended tri-axial accelerometer mounting technique.

8.2.4.3 Special Mounting Problems. The nature of some test items might cause difficulty in accelerometer mounting. Some mounting problems can be overcome by attaching a rigid mounting plate to the test item and mounting the transducers on this plate. Accelerometer mounting techniques are discussed in more detail in (**5**).

8.2.5 Construction of Simulated Test Items.

Because of prohibitive cost or test item unavailability, it may be necessary to construct and test a simulated load. Often, the difficulty associated with proper transducer mounting on the item makes use of a simulated test item desirable. Therefore, a simulated test item must be constructed which has the same size and density characteristics as the actual item. The materials used should be stiff and rigidly fastened together so that the shocks recorded by the transducers are the same as the shocks experienced by the main structure of the actual item. Proper size and density characteristics may be obtained by using various material combinations. Frequently wood has been found to be a desirable material for construction of simulated test items.

Insure that the simulated test item center of mass is located at the same point as in the actual item. Mount the transducers at this location. A symmetrical test item such as shown in Figure 8-6 is used when performing comparative container tests, cushioning materials tests, or developing test methods.

8.2.6 Orientation and Numbering of Package and Item. Test container surfaces should be identified by a standard system of notation such as used in ASTM D 775, Standard Test Method for Drop Test for Loaded Boxes. The accelerometers location and the item's orientation with respect to this identification system should be recorded for each test.

Source: https://assist.dla.mil -- Downloaded: 2016-12-05T12:15Z
Check the source to verify that this is the current version before use.

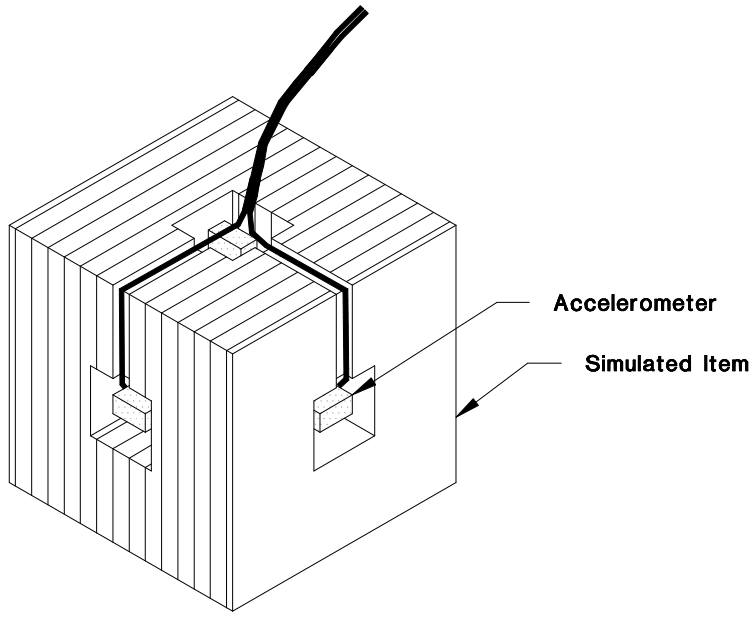

FIGURE 8-6. Accelerometer mounting technique for commonly used simulated test items.

8.2.7 Instrumentation Requirements for Complete Package Testing. The general principles and requirements for shock measurement apply to complete package testing. In addition, a number of special requirements must be considered. The entire acceleration versus time response must be analyzed in complete packaging testing. The requirements are more stringent in complete package testing than for determination of peak acceleration alone. In general, the better the overall instrumentation system frequency response characteristics, the more accurately the entire acceleration versus time response will be reproduced.

While it is considered inadvisable to specify exact frequency response requirements, a uniform frequency response extending from almost zero frequency to about 1,000 Hz is suggested as a reasonable response characteristic for initial testing.

Another important requirement for complete package testing is that three (or more) data recording channels will be operating simultaneously. All channels should be identical so that phase or time differences do not exist between channels. The recorder should be a multi-channel type employing a common recording medium to maintain proper time relationships between channels.

A diagrammatic sketch of an instrumentation system for complete package testing depicting the relationship between channels is shown in Figure 8-7.

8.2.8 Analysis of Data.

Acceleration is a vector quantity. Since direction of accelerations experienced in container tests are not known, the magnitudes cannot be measured directly. However, the magnitude can be determined by the vector addition of three components whose magnitudes and direction are known. These three components are measured by accelerometers whose sensitive axes are mounted 90 degrees from each other, along axes, x, y, and z as shown in Figure 8-7. The magnitude of the vector sum of these accelerations is determined by the equation:

$$a_r = \sqrt{a_x^2 + a_y^2 + a_z^2} \qquad (8:2)$$

Source: https://assist.dla.mil -- Downloaded: 2016-12-05T12:15Z
Check the source to verify that this is the current version before use.

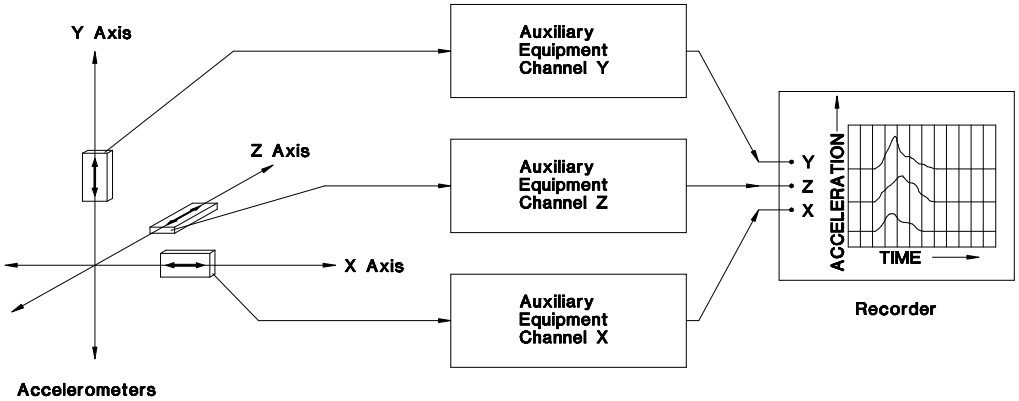

FIGURE 8-7. Diagrammatic sketch of tri-axial recording system.

Peak acceleration will not necessarily occur along all axes at the same instant of time. Therefore the peak resultant acceleration may or may not coincide with peak values of any of the components. As a result, it is necessary to analyze the data point by point along the common time base to determine resultant peak acceleration. Figure 8-8 shows a typical test record with the peaks in bold indicating the difference in time at which peak acceleration values occur.

Test of *Corrugated Fiberboard* Container No. *4* Date *18 September 1996*

Test Condition *24" Corner Drop* Time *2:00 PM*

Package Orientation *Corner 5-3-4 - Impacted* By *Phyllis D. Box*

TIME (ms)	a_X (G)	a_Y (G)	a_Z (G)	Resultant a_r (G)
6	7.2	6.5	3.6	11.45
8	11.9	7.6	7.1	15.78
7	15.7	9.2	**10.1**	20.81
10	16.9	10.2	9.4	21.86
11	**17.1**	10.4	9.2	**22.02**
12	14.2	12.9	9.2	21.19
13	11.2	**13.5**	8.3	19.36
14	9.8	13.1	7.8	18.11
16	8.5	10.6	7.4	15.46
18	8.3	8.1	7.4	13.75
20	6.5	6	7.8	11.79

* Resultant (a_r) = $\sqrt{ax^2 + ay^2 + az^2}$

*** PEAKS IN BOLD**

FIGURE 8-8. Sample data analysis computation sheet for one instrumented container drop test.

Note: Figure 8-8 lists the data and manually computes the resultant using vector addition as shown in the last column. Many computer programs are available to capture the data and perform the vector addition automatically.

Source: https://assist.dla.mil -- Downloaded: 2016-12-05T12:15Z
Check the source to verify that this is the current version before use.

The acceleration along each axis at each time instant is determined by multiplying the corresponding recorded pulse height by the calibration factor of that recording channel. The resulting information can be compiled in a table as shown in Figure 8-8 and from this data the maximum shock experienced by the packaged item can be determined. Using digital techniques for recording and analyzing data, the resultant curve can be calculated and plotted automatically.

8.3 General Principals of Instrumentation for Shock Measurement.

Measurement of shock customarily is made in terms of the acceleration experienced by the item. Magnitude of shock is usually expressed in G units, G = a/g where (a) is the measured acceleration and (g) the acceleration due to gravity.

Electronic instrumentation is necessary to measure impact shock accurately. These instrumentation systems are composed of three basic elements: The transducer, signal conditioning amplifiers, and the recording device. In general, the choice of signal conditioning amplifiers is dictated by the transducer used. Detailed information on instrumentation may be found in Chapters 12 to 20 of reference (**5**) or contact AFPTEF for advice.

8.3.1 Frequency Response Requirements of Components and Systems.

The instrumentation system must have an overall frequency response adequate to accurately measure and record the acceleration versus time pulse. The quality of the system should be such that peak acceleration values can be measured to within ± 5 % of their actual value. Acceleration versus time pulses are generally transients approximating half-sine, triangular, or trapezoidal shapes. These transient signals are composed of a wide range or bands of frequencies. Therefore, to accurately reproduce these signals, each measuring system component must be capable of responding linearly to this frequency band.

Accelerometer type transducers are basically spring mass systems. As such, they have a natural resonant frequency. Therefore, they respond much more easily to inputs close to resonance than to frequencies above or below this point. This type of response is said to be nonlinear. At frequencies up to about one fifth of resonance, the transducer output can be assumed linear (proportional to acceleration) for most applications. By employing damping, the linear response region can be greatly extended.

8.3.2 Transducers and Signal Conditioning Equipment.

An accelerometer is a transducer that senses the reaction of a spring-mass system to acceleration and converts the resulting motion into an electrical signal proportional to acceleration. This transducer and its conditioning amplifier must be considered together as the transducer type determines the conditioning amplifier required.

Three types of accelerometers, the resistance strain gage, piezoresistive, and piezoelectric, are commonly used in shock and vibration testing. They differ greatly in principle of operation, characteristics, and required auxiliary equipment. Each type has its own advantages and disadvantages. However, each is capable of producing accurate and reliable test data.

8.3.2.1 Resistance Strain Gage Accelerometers and Conditioning Amplifiers.

8.3.2.1.1 Accelerometers. The resistance strain gage is basically a length of very fine wire or foil that exhibits a change in resistance proportional to the mechanical strain imposed on it. The strain gage accelerometer consists of a mass so mounted as to produce strain in the gages (usually four gages) that is proportional to the accelerating force.

Source: https://assist.dla.mil -- Downloaded: 2016-12-05T12:15Z
Check the source to verify that this is the current version before use.

The major advantage of this transducer type is its ability to respond to low frequency signals, including DC. Undamped strain gage transducers are limited in high frequency response because of a relatively low resonant frequency. To extend the usable upper limit of this response, viscous damping is usually employed.

As a guide to adequate frequency response for damped transducers, the following rule is recommended: To obtain an accuracy of better than 5 % of the peak acceleration a transducer damped 0.4 to 0.7 of critical must have a natural period of about one-third or less of the duration of the acceleration pulse. This rule applies to the measurement of acceleration pulses with the general characteristics of triangular, half-sine, versed sine, and trapezoidal pulses (**5**).

Most strain gage accelerometers employ viscous damping of about 0.7 of critical damping. This damping ratio produces an essentially linear frequency response to about 0.6 of the transducers natural resonance frequency. Furthermore, this damping factor produces linear phase shift, thus avoiding distortion of the pulse shape. The usable frequency response of damped strain gage accelerometers can extend from zero frequency to several hundred Hz.

8.3.2.1.2 Conditioning Amplifiers. Usually four strain gages are used in a strain gage accelerometer. These gages are hooked up electrically to form a bridge. A bridge amplifier is required to balance the bridge network. This amplifier converts the small resistance changes to voltage changes, and amplifies these changes to a usable output level.

To convert the resistance changes to voltage changes, the bridge amplifier must supply a constant excitation voltage across the bridge network. This voltage can be either a DC or an AC voltage. If an AC voltage is used, its frequency must be at least ten times the highest frequency of interest in the shock pulse.

Resistance gage output impedance's are low. This permits use of relatively long cables from the accelerometer without introducing signal loss or pickup interference problems. A typical system using a resistance strain gage accelerometer is diagrammed in Figure 8-9.

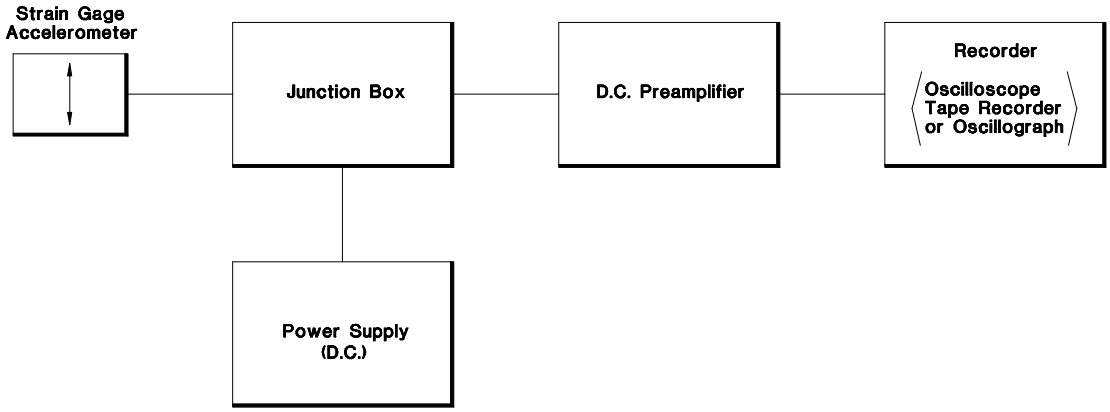

FIGURE 8-9. Typical recording system employing a strain gage accelerometer.

8.3.2.2 Piezoresistive Accelerometers and Conditioning Amplifiers.

8.3.2.2.1 Accelerometers. The piezoresistive accelerometer is a strain gage accelerometer in which the wire or foil strain gages have been replaced with silicon chips. These semiconductor chips have a much greater gage factor (greater resistance change per unit strain) than standard

Source: https://assist.dla.mil -- Downloaded: 2016-12-05T12:15Z
Check the source to verify that this is the current version before use.

wire or foil gage types. This means that the accelerometer will produce a larger (higher output) signal requiring less amplification. Alternatively, the active spring mass system (chip and mass) can be made smaller; thus raising the resonant frequency and linear usable frequency range of the transducer. The major problem with these transducers is their sensitivity to temperature change.

8.3.2.2.2 Conditioning Amplifiers. The accelerometers use the same types of conditioning amplifiers as 8.3.2.1.2.

8.3.2.3 Piezoelectric Accelerometers and Conditioning Amplifiers.

8.3.2.3.1 Accelerometers. Piezoelectric accelerometers employ small pieces of piezoelectric material, such as barium titanate or lead zirconate, as the sensing element. When subjected to mechanical stress or acceleration, this material generates an electric charge that is proportional to the applied force or acceleration.

The output signals are relatively large and the transducers can be made very small and lightweight. The accelerometer natural response frequency may be on the order of 50 KHz with essentially linear frequency response to about one-fifth of this frequency. Its one major limitation is low frequency response, it will not respond to DC. For cushioning test work the transducer should have a low frequency cut off no greater than 1 to 2 Hz.

The piezoelectric accelerometer generates a signal without the need for an external power source and has a high internal capacitive impedance. This capacitance and the input circuit resistance to which it is connected establishes an RC time constant that limits the accelerometer low frequency response. When the time constant is small and the pulse duration is sufficiently large, a portion of the generated charge may leak off before the pulse is completed. Therefore, peak acceleration accuracy measurement is dependent on the ratio of the time constant to the pulse length. A small time constant is indicated by a "negative overshoot" as shown in Figure 8-10.

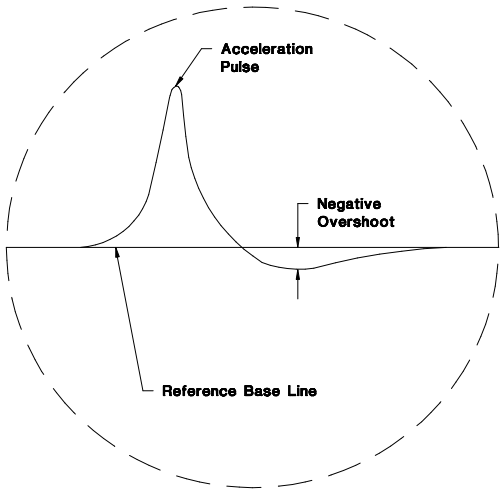

FIGURE 8-10. Negative "overshoot" on acceleration-time record obtained with a piezoelectric accelerometer.

As the overshoot increases, the error between the apparent peak acceleration and the actual peak acceleration increases. A more complete discussion of the response characteristics of piezoelectric accelerometer may be found in **(5).**

Source: https://assist.dla.mil -- Downloaded: 2016-12-05T12:15Z
Check the source to verify that this is the current version before use.

8.3.2.3.2 Conditioning Amplifiers.
The time constant may be increased by using high impedance matching circuits, usually of the cathode follower type. The cathode follower should have an input impedance of at least 100 megohms. When this condition is met, the low frequency response should extend downward to between 2 to 10 Hz. The high output impedance of the accelerometer also increases the importance of cable length and quality. The cable length from the accelerometer to the cathode follower usually is limited to a few feet. One instrumentation system using a piezoelectric accelerometer and cathode follower is diagrammed in Figure 8-11.

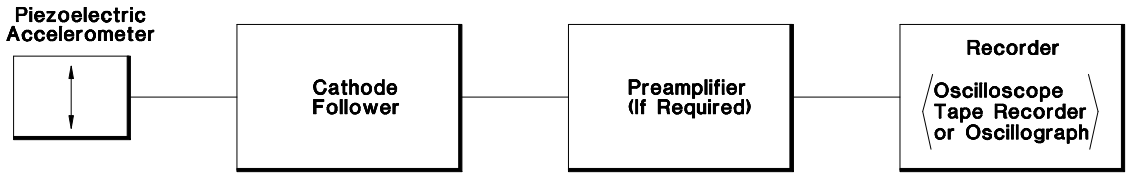

FIGURE 8-11. Typical recording system employing a piezoelectric accelerometer.

The solid state charge amplifiers development has further increased the simplicity and reliability of piezoelectric accelerometer systems. The accelerometer is connected directly to the charge amplifier. The input signal is applied to a field effect transistor (FET) which provides a high impedance input and the resulting signal is amplified.

The basic difference between the charge amplifier and the cathode follower is that the charge amplifier in effect converts the input charge (from the piezoelectric accelerometer) to an output voltage which is directly proportional to the charge. The system advantages are better frequency response (2 to 1000 Hz) and a signal level essentially independent of cable length. Some models also include a variable filter system to further improve the signal-to-noise ratio.

As a maximum, the cutoff frequency should be no higher than the linear range of the transducer. The slope in the attenuation band should not be less than 12 dB per octave. As a rule of thumb, this frequency should never be lower than 2.5 times the reciprocal of the pulse width. Also as a rule of thumb, shock pulses experienced in packaging generally have a filter cutoff in the range of 200 to 800 Hz.

8.3.3 Recording Devices.

Many types of recording devices are available but only a few are suitable for recording the short period transient signals encountered in shock testing. Suitable types include the cathode ray oscilloscopes and computer-controlled data acquisition systems.

8.3.3.1 Cathode Ray Oscilloscopes. The cathode ray oscilloscope is well suited for this type of data recording. Since the only moving element is an electron beam, the oscilloscope frequency response is limited only by its electronic amplifier circuits. The oscilloscope may be adjusted for single sweep operation and thus a single transient event may be recorded. A storage type oscilloscope has the ability to retain a trace image for as long as desired. Permanent recording is usually desired and may be easily accomplished by photographing the trace. The oscilloscope is basically a single channel device. Two or more channels may be obtained by the use of multi-gun cathode ray tubes or by electronic switching of a single beam.

8.3.3.2 Computer-Controlled Data Acquisition Systems. With the advent of the mini-computer a practical means for digitizing analog signals has become available. A computer equipped with an

Source: https://assist.dla.mil -- Downloaded: 2016-12-05T12:15Z
Check the source to verify that this is the current version before use.

analog to digital converter and appropriate software makes it possible to capture, store, retrieve, and analyze shock pulses quickly and easily. These systems are cost competitive with tape recorder systems, but far surpasses them in ease of use and versatility.

8.3.4 Calibration.

The probable component accuracy limits of an instrumentation system can be estimated from the information supplied by manufacturers' specifications and calibration data. However, empirical calibration testing is needed to establish the initial overall system calibration sensitivity and to assure accurate calibration maintenance during subsequent use.

A minimal safeguard against gross calibration error would be periodic calibration of the accelerometer and signal conditioning amplifiers by the manufacturer. **(5)**

8.3.5 Summary of Requirements for Instrumentation.

The entire instrumentation system should be capable of accurately reproducing complex signals associated with shock. For a reasonable accuracy level, a linear frequency response from near zero frequency to at least several hundred hertz is required. Phase shift should either be zero or linear with frequency. The accuracy of input signal reproduction is directly related to the overall system instrumentation accuracy. Thus, to avoid data recording errors, periodic recording system checks must be performed.

Source: https://assist.dla.mil -- Downloaded: 2016-12-05T12:15Z
Check the source to verify that this is the current version before use.

9.0 CUSHIONING MATERIAL TEST PROCEDURES AND APPARATUS

9.1 Determination of Cushioning Material Characteristics.

Design data for the pertinent characteristics of cushioning materials are a prerequisite for rational cushioning design. Generally, this information is obtained by designers, **(1)** directly from vendors, **(2)** by conducting their own tests, **(3)** from published literature, and **(4)** by deduction from material specification tests.

To be useful, test data for design purposes should be collected under environmental conditions approximating the service environment. Therefore, the practical value of published test data must be assessed by a designer primarily according to their knowledge of the test procedures and apparatus used. Some knowledge about the reliability of the testing facility is also helpful.

The information in this chapter is presented to provide the designer with sufficient information about test methods, apparatus, and underlying principles to enable them to conduct their own tests of cushioning characteristics and to assess the applicability and practical value of published design data.

9.1.1 Sample Preparation. The specimens should be the cushioning materials used in the various tests. They should have six rectangular faces. The length and width of the top and bottom faces usually will be equal and at least four inches long. Height should not exceed width or length of the specimen.

9.1.1.1 Cutting. Care is required in cutting properly sized specimens to ensure flat, smooth, mutually perpendicular, and correctly dimensioned cushion faces. Equipment for cutting the material include band saws, hot wires, and table saws equipped with circular knife edged blades.

9.1.1.2 Checking. Unless otherwise specified, the following material checks should be performed on the specimens. Only test samples passing these checks should be accepted for testing.

9.1.1.2.1 Homogeneity. Materials should show no visual evidence of non-uniformity in the mixture of their various component ingredients. Cell size should be uniform throughout the sample. Check with the specific foam material specification for exact homogeneity requirements.

9.1.1.2.2 Perpendicular Surfaces. All intersecting specimen faces should be mutually perpendicular to within 2 degrees.

9.1.1.2.3 Parallel Surfaces. All parallel faces should be parallel to within 2 degrees.

9.1.1.2.4 Flatness. All surfaces should be flat to within 1/32 inch (0.75 mm).

9.1.1.2.5 Dimensions. The length and width should be within 1/16 inch (1.5 mm) of nominal. The height should be within 1/32 inch (0.75 mm) of nominal when measured in accordance with paragraph 9.1.2.

9.1.1.2.6 Density. Material density, when specified, should be within 10 percent of the specified density when measured in accordance with paragraph 9.1.3.

9.1.1.3 Identification. Assign an identification code to each specimen and mark specimens accordingly.

9.1.1.4 Conditioning. Unless otherwise noted in a test specification, specimens should be conditioned to equilibrium in air uniformly maintained at 73º $\pm$ 4ºF (23 $\pm$ 2ºC) and 50 $\pm$ 2 % relative humidity. Ambient conditions during conditioning should conform to those during testing. A specimen should be considered at equilibrium when its weight change during a one hour conditioning period does not exceed 0.02 % of its final weight for that period.

Source: https://assist.dla.mil -- Downloaded: 2016-12-05T12:15Z
Check the source to verify that this is the current version before use.

9.1.2 Measuring Dimensions.

9.1.2.1 Scope. This procedure is used to determine the overall length, width, and thickness of a cushion specimen.

9.1.2.2 Apparatus. Length will be measured using a jig with one moveable block (Figure 9-1) and a measuring scale graduated to .01 inch (0.3 mm). A plate and dial indicator (Figure 9-2) may be used to measure thickness. The plate should be of suitable size and weight to provide a uniform load of 0.025 (1.75 kg/mm²) the entire specimen.

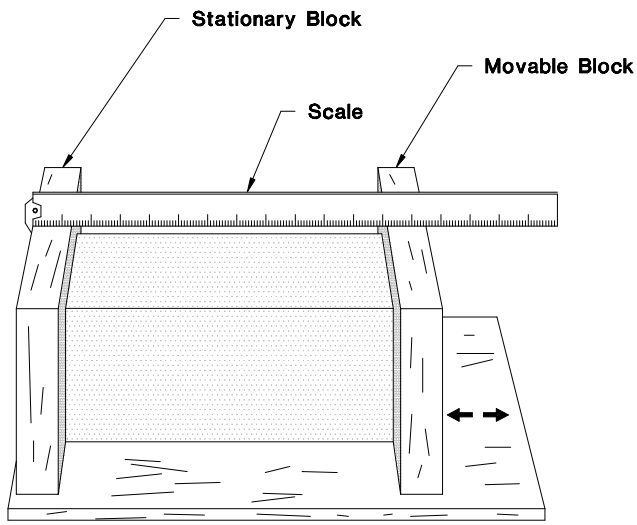

FIGURE 9-1. Apparatus for measuring the length and width of a cushion.

9.1.2.3 Conditioning. Test specimens should be conditioned per paragraph 9.1.1.4.

9.1.2.4 Test Procedure. Length of specimen should be determined in the jig (Figure 9-1). Place the movable block firmly against the end of the specimen and measure the distance between the two blocks at the midpoints of the specimen edges to the nearest 0.01 inch (0.3 mm). Width of the specimen will be determined in like manner.

To determine the thickness of the specimen, load the top surface area of the specimen with a flat plate (Figure 9-2) to of 0.025 (175 kg/mm²), To determine the load in English, use the following example: 4" x 4" x (0.025 psi) = 0.40 pounds force. To determine the load in Metric use the following example: 102mm x 102mm x 1.75 x 10^{-5} kg/mm² = 0.183 kg force. After a 30 second interval and while the specimen is still under load, either measure the thickness at the geometric center of the specimen's top surface with the dial indicator or average the thickness measurements at the four corners using a scale.

9.1.3 Density.

9.1.3.1 Scope. This procedure is used to determine cushion material density in pounds per cubic foot.

9.1.3.2 Apparatus. The apparatus will be a weighing scale or torsion balance capable of weighing a specimen to within 0.02 % of its weight.

9.1.3.3 Conditioning. Test specimens should be conditioned per paragraph 9.1.1.4.

Source: https://assist.dla.mil -- Downloaded: 2016-12-05T12:15Z
Check the source to verify that this is the current version before use.

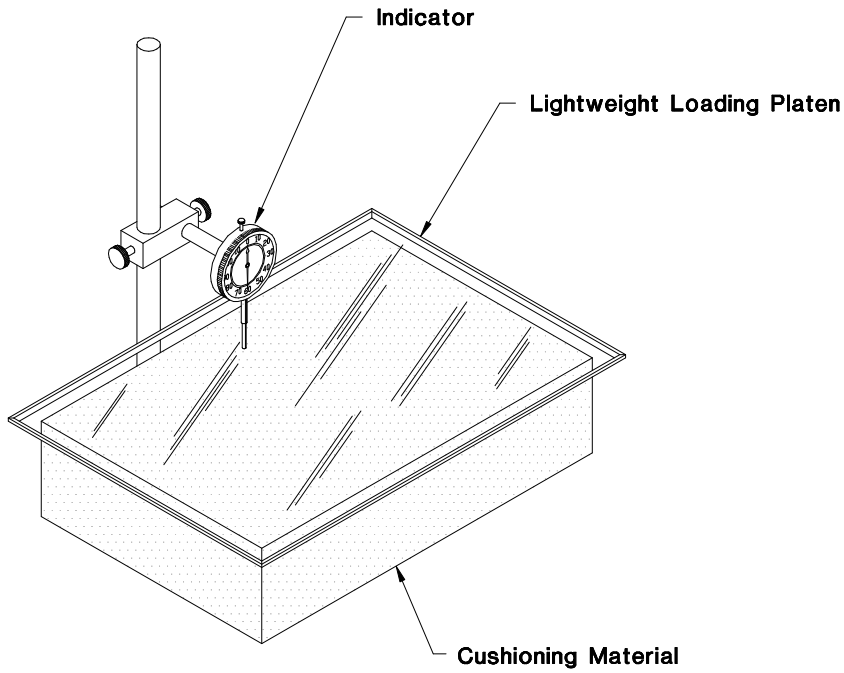

FIGURE 9-2. Equipment used to measure the thickness of a cushion.

9.1.3.4 Test Procedure. Determine the length, width, and thickness of each specimen per paragraph 9.1.2 and weigh to within 0.1% of total specimen weight.

9.1.3.5 Calculation.

9.1.3.5.1 Density (English). Density should be calculated as follows:

$$D = \frac{w}{L\,W\,T} = \text{lb / cubic inches} \qquad (\mathbf{9:1})$$

Where D = density in pounds per cubic inches
w = specimen weight in pounds
L = specimen length in inches
W = specimen width in inches
T = specimen thickness in inches

9.1.3.5.2 Density (Metric). Density should be calculated as follows:

$$D = \frac{w}{L\,W\,T} = \text{kg/mm}^3 \qquad (\mathbf{9:1})$$

Where D = density in kg/mm^3
w = specimen weight in kilograms
L = specimen length in millimeters
W = specimen width in millimeters
T = specimen thickness in millimeters

Source: https://assist.dla.mil -- Downloaded: 2016-12-05T12:15Z
Check the source to verify that this is the current version before use.

9.1.4 Moisture Content.

9.1.4.1 Scope. This procedure is used to determine cushioning material moisture content as a percentage of the oven-dry weight. Note that because the point of reference for the calculation is the oven dry weight rather than the original weight it is possible to obtain percentages greater than 100 %. Thus, a moisture content of 150 percent means that the weight of the water in the specimen is 1.5 times the specimens dry weight.

9.1.4.2 Outline of Test Method. The moisture content is calculated from weight values obtained before and after oven drying a representative material sample. This test method is limited to materials that are not physically damaged by the test temperature and do not contain volatile materials that would be driven off during the drying process.

9.1.4.3 Test Procedure. Refer to ASTM D 4442, Standard Test Methods for Direct Moisture Content Measurement of Wood and Wood-Base Materials. Use specification test procedure Method A or Method B and report format.

9.1.5 Dynamic Compression.

9.1.5.1 Scope. This section covers a method for determining the shock isolation capability of cushioning materials, especially those that exhibit a high degree of compressibility and recovery. The shock isolation performance of these materials is influenced by several factors. The ratios of material length, width, and height; degree of material constraint within a package; and the ratio of the load bearing area to total cushion area are some of the more important factors. This procedure establishes idealized but controllable parameters for testing package cushioning materials. Therefore, the data derived can be used only to estimate the protection provided by any given package design. Design finalization must be accomplished through an appropriate packaging drop test procedure. However, the data obtained from the estimate usually are sufficiently accurate for the purpose of initial design.

9.1.5.2 Outline of Method. A test cushion is placed on a flat impact surface and dynamically compressed by a free falling loading head. On impact with the cushion, the deceleration of the loading head is measured by a transducer mounted on the head. The transducer signal (acceleration versus time) is fed into a suitable recording system which has been calibrated to read in gravitational units (G's), multiples of acceleration due to gravity (g). The peak G value of each drop and its associated "static stress" are recorded for later analysis. Static stress is defined as the dropping head weight divided by the cushion top surface area. Plots of peak acceleration versus static stress data are useful for solving cushioning problems involving shock isolation and reduction.

9.1.5.3 Testing Apparatus. As a minimum, the dynamic cushion tester should consist of an adjustable weight dropping head and a massive stationary impact base. The dropping head has a flat impact surface that is larger than the top surface of the test cushion. The dropping head should be suitably guided for movement in a vertical direction with a minimum of friction. More complex machines can have a winch to lift the dropping head, brakes to catch the rebounding head, etc. The impact base must have a face parallel to the face of the dropping head. A typical dynamic cushion tester and associated instrumentation are shown in Figure 9-3.

The dropping head and the impact base of the tester must be rigid. Insufficient rigidity can cause undesirable vibrations in the tester which are recorded in the acceleration versus time curve. Much can be learned about system rigidity by examination of the trace. Shock excited ringing of the loading head can be confirmed by the existence of oscillation on the trace beyond the time when the pulse returns to zero acceleration. At this instant the loading head is no longer in contact with the cushion (it has rebounded away); therefore, distortion at this time must be caused by residual vibration of the loading head. An example of shock-excited ringing of the dropping head is illustrated in Figure 9-4. Another

Source: https://assist.dla.mil -- Downloaded: 2016-12-05T12:15Z
Check the source to verify that this is the current version before use.

indication of undesirable flexural vibrations in the loading head and/or impact base is the existence of sharp irregularities in the curves plotted for successive recorded peak acceleration values.

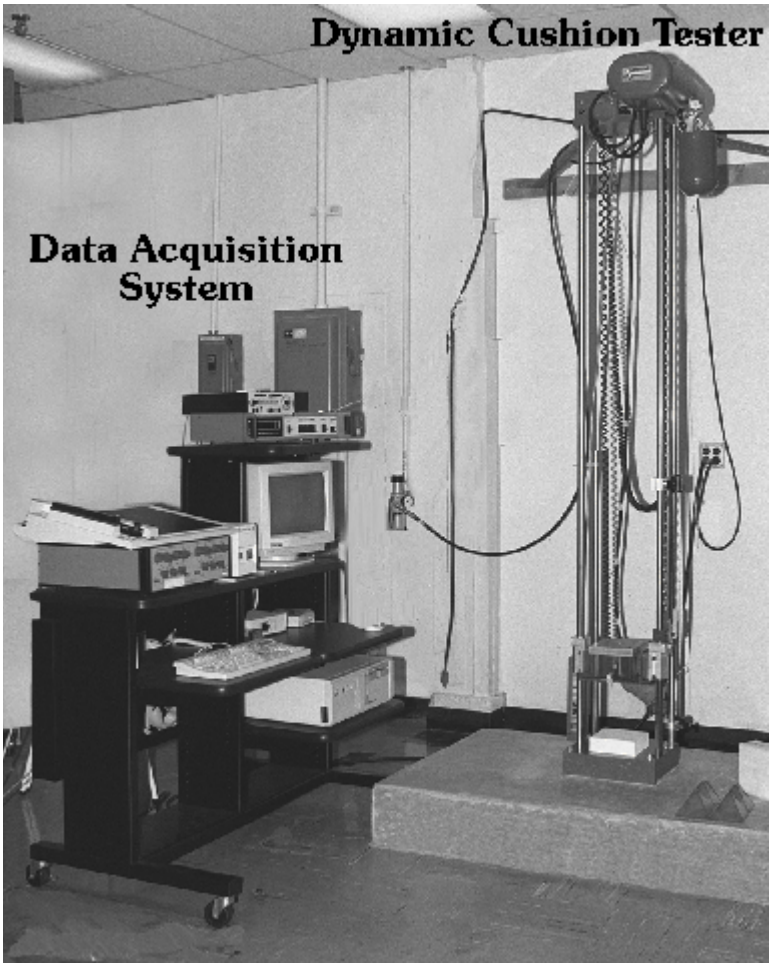

FIGURE 9-3. DYNAMIC CUSHION TESTER WITH DATA ACQUISITION SYSTEM

The impact base mass must be large compared to the dropping mass to avoid movement of the base during impact. One rule of thumb for the impact base design is that its mass be at least 50 times greater than the maximum anticipated mass of the loading head.

Under certain conditions, such as tests of high-density polyethylene with a lightweight loading head, secondary peaks on the leading edges of acceleration versus time pulses may be observed. These secondary peaks are caused by shock wave propagation in the cushioning material. A typical illustration of this phenomenon is shown in Figure 9-5. Shock wave effects are generally manifested by gradual peaks on the leading edge of pulses. They seldom cause appreciable distortion of the peak acceleration value for the pulses. The acceleration and resultant impact velocity of all dynamic dropping heads are influenced by guide friction and air resistance. These effects vary not only with the type of apparatus but with the dropping head weight. Accordingly, the drop height is specified as equivalent free-fall height, based upon impact velocity, rather than actual drop height [a 24-inch (0.6-meter) free fall is equivalent to 136.1 inches

Source: https://assist.dla.mil -- Downloaded: 2016-12-05T12:15Z
Check the source to verify that this is the current version before use.

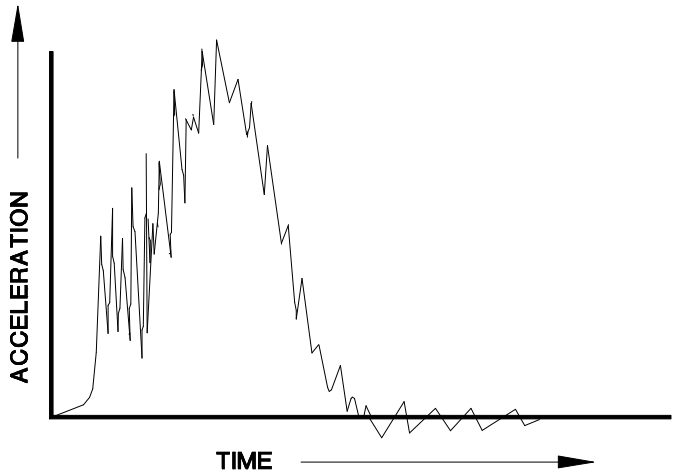

FIGURE 9-4. Acceleration-time curve showing distortion caused by shock-excited ringing of the loading head.

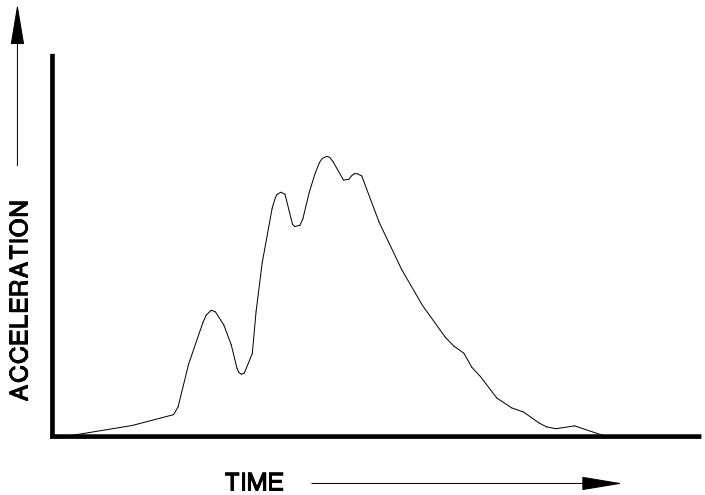

FIGURE 9-5. Acceleration-time pulse showing shock wave effects.

9.1.5.4 Recording Apparatus. Generally a recording system will consist of three components: a transducer (accelerometer) to sense acceleration and transform it into an electrical signal; a conditioning amplifier to prepare the signal for recording; and the recording device to preserve the signal for viewing.

There are three basic types of accelerometers including: strain gage, piezoresistive, and piezoelectric, each requiring their own specialized conditioning amplifiers. For more information, refer to paragraph 8.3.

Source: https://assist.dla.mil -- Downloaded: 2016-12-05T12:15Z
Check the source to verify that this is the current version before use.

The third element in signal recording is the data capture system. This system can be as simple as a storage oscilloscope or as complex as a computer controlled data acquisition system where the data is digitized and stored for later analysis by sophisticated computer software.

For information on recording instrumentation, refer to paragraph 8.3.3.

9.1.5.5 Test Specimens. Generally five test specimens are required. An extra specimen is required as a velocity test cushion for determining free fall drop height. Check the specific foam material specification for the number and size of cushions needed. Dimensions should be measured per paragraph 9.1.2. The weight and density of the test specimens should be determined per paragraph 9.1.3.

9.1.5.6 Conditioning. Test specimens will be conditioned per paragraph 9.1.1.4.

9.1.5.7 Prework. When required, prework material per paragraph 9.1.16.

9.1.5.8 Test Procedure. **Note: The following is an example of a cushion curve test procedure. Use the specific foam material specification for the exact procedure.** Adjust the dropping head weight for the lowest static stress point. Using the velocity test cushion as a target, adjust the dropping head release point to obtain the desired equivalent free fall drop height velocity. When this height has been set, replace the velocity test cushion with the first test specimen and begin the test sequence.

Impact each test specimen five times. Record the dropping head acceleration versus time record and peak acceleration during cushion compression for each drop. Allow a minimum of one minute between drops on the same cushion. To speed up the testing procedure it is useful to perform the first drop on all of the test specimens before performing a second drop on the first specimen.

After completing all five drops on all test specimens increase the dropping head weight for the next static stress point. Again use the velocity test cushion to adjust the free fall drop height. Then repeat the five drop sequence on the test specimens.

Testing will be done at each of the chosen static stress points progressing from the lowest to the highest static stress point. If the testing is to be used for material qualification purposes, do not replace the test specimen at each static stress point. If the testing is to be used for design purposes, replace the test specimen at each static stress point. If dynamic set is to be calculated, measure the test specimen final thickness one hour after impact testing per paragraph 9.1.2.

Note: For further information on Dynamic Compression Test Procedures see ASTM D 1596, Standard Test Method for Dynamic Shock Cushioning Characteristics of Packaging Material and the foam material specifications listed in Section 2.0. Also see (**17**) in Appendix D.

9.1.5.9 Calculations.

9.1.5.9.1 Average Peak Acceleration Values. At each static stress, disregard the first peak acceleration value on each specimen and average the remaining four peak accelerations. Then average these average peak acceleration values to obtain an overall average peak acceleration value for each static stress point.

9.1.5.9.2 Dynamic Set. Dynamic set should be calculated as follows:

$$\text{Set} = \frac{T_o - T_f}{T_o} \times 100\ \% \qquad (9:2)$$

where T_o = original specimen thickness; T_f = final specimen thickness.

Source: https://assist.dla.mil -- Downloaded: 2016-12-05T12:15Z
Check the source to verify that this is the current version before use.

9.1.6 Vibration Transmissibility.

9.1.6.1 Scope. This section covers a method for determining the vibration transmissibility/isolation capability of cushioning materials, especially those that exhibit nonlinear dynamic load-deflection characteristics. The data derived by this method may not necessarily represent the actual performance of these materials in packages. The method of specimen containment, specimen size, and frequency sweep rate can all affect the data. However, the data obtained by this test procedure should provide useful guidance for initial package design.

9.1.6.2 Outline of Method. A test block representing a packaged item is fixtured on a vibration tester. The signal outputs from transducers located in the test block and on the platform of the vibration tester are fed into a suitable recording system. The recorded test data can then be analyzed and presented in the form of vibration transmissibility-frequency curves.

9.1.6.3 Testing Apparatus. The transmissibility tester should consist of a test block and fixture mounted on the platform of the vibration tester. The test block is a rectangular parallelepiped constructed to facilitate incremental changes in weight. The faces of the test block in contact with the cushion test specimens should measure 8" x 8" (200mm x 200mm). An accelerometer will be mounted in a cavity located at the geometric center of the test block.

The test fixture is designed to restrict the test block to essentially vertical movement with a minimum of friction. A second accelerometer should be attached to the vibration tester platform to monitor its vertical movement. It is important that the test block be free from friction and rotation which would reduce transmissibility and change the frequency at resonance. Also, care must be taken to avoid separation between the test block and the test material during testing to prevent test data distortion. The existence of a void between the test material and test block can result in shock excited ringing of the test block.

9.1.6.4 Recording Apparatus. A computer controlled data acquisition system provides detailed analysis of data and the direct plotting of transmissibility versus frequency curves. All recording systems, regardless of type (including transducers and recorders) must have a frequency response which is adequate to measure the peak acceleration versus frequency values to an accuracy of $\pm$ 5 % of the actual value.

9.1.6.5 Test Specimens. Each test specimen will have length and width dimensions of 8 inches (200 mm) unless otherwise specified. Specimen thickness should be those of particular interest to the investigator or as required in the material specification. Dimensions should be measured according to paragraph 9.1.2. The weight and density of the test specimens should be determined in accordance with paragraph 9.1.3.

9.1.6.6 Conditioning. Test specimens will be conditioned per paragraph 9.1.1.4.

9.1.6.7 Test Procedure. See paragraph 5.5.6 on Transmissibility Curve Development for the test procedure. Use ASTM D 999, Methods of Vibration Testing of Shipping Containers, and ASTM D 4728, Standard Test Method for Random Vibration of Shipping Containers for Vibration Test Setup.

9.1.7 Abrasion.

9.1.7.1 Scope. This procedure provides a qualitative abrasive index for cushioning material.

9.1.7.2 Apparatus. The following apparatus will be used:

a. A flat sheet of aluminum, with an area of not less than a total of 9 square inches (or 5806 mm^2) and having one side bright finish. The test area should be a portion of the bright surface that is clean and free from mars and scratches.

Source: https://assist.dla.mil -- Downloaded: 2016-12-05T12:15Z
Check the source to verify that this is the current version before use.

b. A rectangular metal weight of 4.00 ± 0.02 pounds (1.81 ± 0.009 kg). The bottom surface of the weight should be 2.0 to 2-1/16 square inches (2580 to 2744--mm²) milled smooth and cleaned.

9.1.7.3 Test Specimens. The cushioning specimens should be 1-7/8 to 2 square inches (2268 to 2580--mm²) with a uniform thickness not greater than 1/2 inch (13 mm) and should be representative of the material as supplied by the manufacturer.

9.1.7.4 Conditioning. Test specimens will be conditioned per paragraph 9.1.1.4.

9.1.7.5 Test Procedure. Center the cushioning specimen on the bottom of the weight and fasten it with a single layer of pressure-sensitive, double-coated tape. The test specimen surface conditions must be equivalent to the material surface conditions normally in contact with a packaged item.

Place the specimen and weight on the test area of the aluminum sheet, so that the specimen supports the weight. Insure that the specimen and the aluminum test surface remain clean. The specimen, supporting the weight, should be rubbed back and forth for 30 seconds on the bright side of the aluminum sheet. The direction of motion should be perpendicular to the machine direction, if present, of the aluminum sheet. A stroke of approximately 6 inches at a speed of approximately one foot per second should be employed. The technique of rubbing should not alter the pressure between the aluminum and the specimen.

Use direct and side lighting at various angles to the plane and direction of rubbing, to visually examine the aluminum sheet for any scratches or other effects resulting from the test.

Classify the effect on the rubbed surface as "scratched", "dulled", "polished", or "not affected".

If the aluminum surface appears dulled, examine with a 10-power magnifying glass and wash the area with a non-abrasive liquid cleaning solution to determine whether the dull appearance was caused by scratching or by deposition of specimen fragments on the aluminum.

9.1.8 Creep.

9.1.8.1 Scope. This test method determines the creep characteristics of cushioning materials in bulk, sheet, or molded form. Cushioning material creep is the dimensional change over time of a material under static load. The creep rates determined by this test might differ from those that actually exist in a package during shipment because of variations in specimen dimensions, temperature, humidity, shock, and vibration. See Figure 9-6 for test setup.

9.1.8.2 Test Procedure. Refer to ASTM D 2221, “Standard Test Method for Creep Properties of Package Cushioning Materials”. Follow specification test procedure and report format.

9.1.8.3 Prework. When required, prework material per paragraph 9.1.16.

9.1.9 Static Compressive Force-Displacement.

9.1.9.1 Scope. This procedure is intended to evaluate the relationship between a slowly applied compressive load and the resultant displacement of cushioning materials. This information is helpful in determining the outer container size required to accommodate item and cushioning.

9.1.9.2 Apparatus. A compression/tension testing machine similar to that shown in Figure 9-7 is required. The universal testing machine must be equipped with both force and displacement transducers to record the data. Testing at temperature conditions other than room temperature is an option if the equipment is fitted with an environmental chamber.

Source: https://assist.dla.mil -- Downloaded: 2016-12-05T12:15Z
Check the source to verify that this is the current version before use.

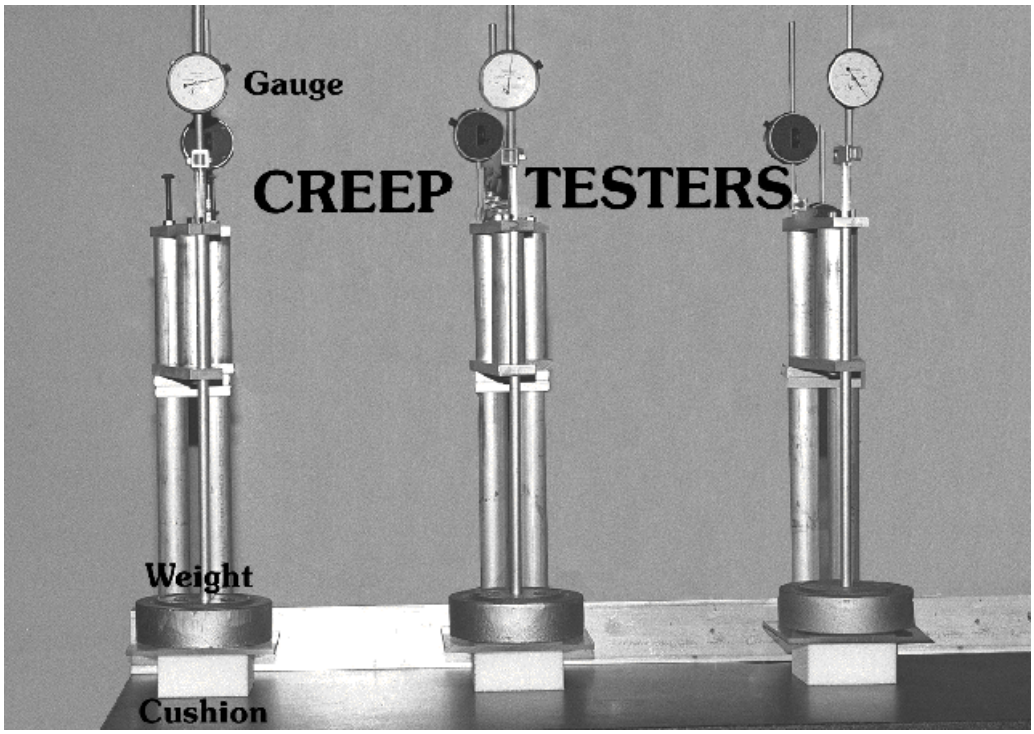

FIGURE 9-6. COMPRESSIVE CREEP TEST SETUP.

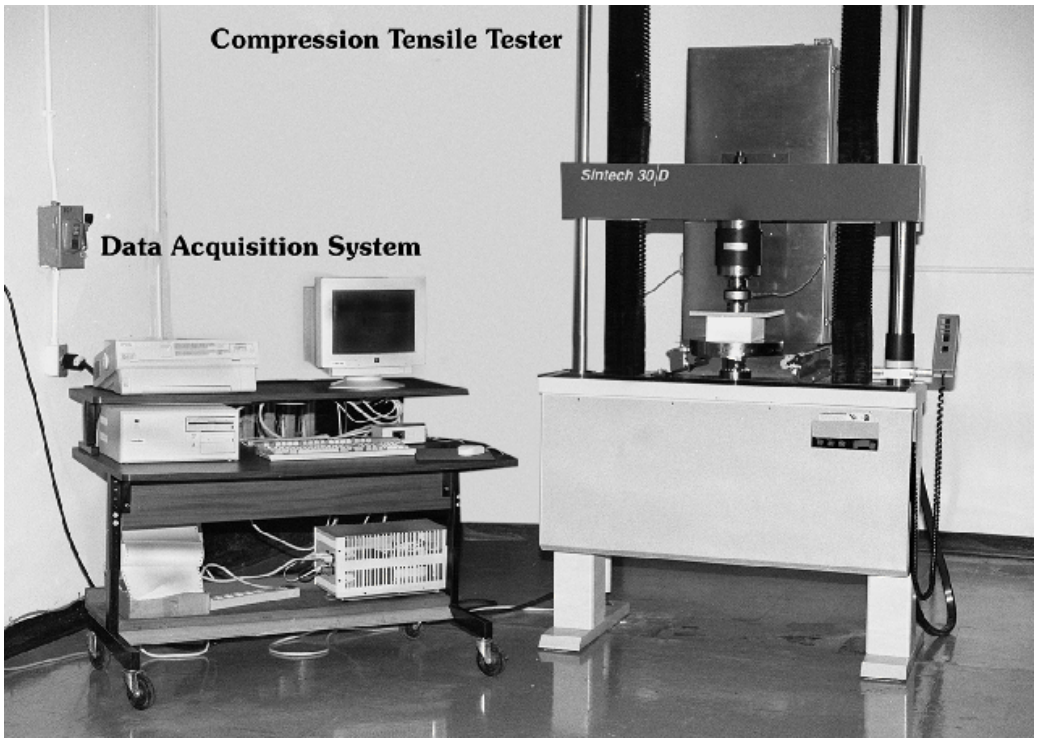

FIGURE 9-7. COMPRESSION / TENSILE TESTER
WITH DATA ACQUISITION SYSTEM

Source: https://assist.dla.mil -- Downloaded: 2016-12-05T12:15Z
Check the source to verify that this is the current version before use.

9.1.9.3 Test specimens. Each test specimen will have length and width dimensions of not less than 4 inches (100 mm). Larger specimens [8 x 8--inches (200 x 200--mm)] are recommended, machine capacity permitting. Specimen thickness should be 1 inch (25 mm) minimum. Materials less than 1 inch (25 mm) thick should be stacked to the required minimum thickness.

9.1.9.4 Conditioning. Test specimens will be conditioned per paragraph 9.1.1.4.

9.1.9.5 Prework. When required, prework material per paragraph 9.1.16.

9.1.9.6 Test Procedure. The specimen should be loaded in a compression/tension testing machine using a strain rate not greater than 1.0 inch per minute per inch of specimen thickness (25 mm per minute for each 25 mm of specimen thickness). If the specimen has been preworked, use the specimen thickness after prework.

The load should be recorded at increments small enough to obtain a minimum of 15 readings for the curve. Continue loading the specimen until at least a 50% deflection is reached and a 5 percent change in initial thickness causes a 100 percent increase in load. Then unload the specimen. A continuous curve of load versus deflection should be plotted. Plot a compressive force displacement curve with force as the ordinate and displacement as the abscissa.

9.1.9.7 Calculations. For stress strain curves, compute the compressive stress in pounds per square inch at various points along each force displacement curve

9.1.9.7.1 Stress. Stress should be calculated as follows:

$$f = \frac{F}{LW} \qquad (9:3)$$

where:
f = stress applied to specimen
F = force exerted by the testing machine in pounds
L = specimen length in inches
W = specimen width in inches.

9.1.9.7.2 Strain. Strain corresponding to stress should be calculated as follows:

$$s = \frac{x}{T} \qquad (9:4)$$

where:
s = strain resulting from stress (f)
x = cushioning material displacement by an object
T = either original cushion thickness (T0), or preworked thickness (Tp), whichever applies.

9.1.9.7.3 Compression Set. Compression set should be calculated as follows:

$$\text{Compression Set} = \frac{T - T_c}{T}(100)\,\% \qquad (9:5)$$

where:
T = either original cushion thickness (T_0), or preworked thickness (Tp), whichever applies
T_c = specimen thickness after compression testing.

Source: https://assist.dla.mil -- Downloaded: 2016-12-05T12:15Z
Check the source to verify that this is the current version before use.

9.1.10 Tensile Strength.

9.1.10.1 Scope. This procedure is used to check compliance of the cushioning material tensile strength with a minimum strength requirement.

9.1.10.2 Test Procedure. Refer to ASTM D 1623, "Standard Test Method for Tensile and Tensile Adhesion Properties of Rigid Cellular Plastics". Follow specification test procedure and report format. Use of the compression/tension testing machine shown in Figure 9-7 is required.

9.1.11 Fragmentation.

9.1.11.1 Scope. This procedure is used to measure the dusting and fragmentation characteristics of commonly used cushioning materials.

9.1.11.2 Test Procedure. Refer to ASTM C 421, "Standard Test Method for Tumbling Friability of Preformed Block Type Thermal Insulation". Follow specification test procedure and report format.

9.1.12 Fungus Resistance.

9.1.12.1 Scope. This procedure is designed to show if a material is subject to attack by fungi. Cushioning material is sprayed with a standard test fungi suspension of mixed spores. Specimens are observed for fungus growth while stored under conditions of elevated temperature and humidity.

9.1.12.2 Test Procedure. Refer to ASTM G 21, "Standard Practice for Determining Resistance of Synthetic Polymeric Materials To Fungi". Follow specification test procedure and report format.

9.1.13 Hydrolytic Stability.

9.1.13.1 Scope. This procedure determines the change in static compressive strength of cushioning specimens at room temperature that are subjected to high temperature and humidity conditions over an extended period of time.

9.1.13.2 Apparatus. The apparatus required for this test is as follows:

a. An environmental chamber of a suitable size to hold the specimens and capable of maintaining the required temperature and humidity over an extended period of time.

b. A balance or scales with an accuracy of ± 0.01 pound (± 5 grams).

c. A compression/tension testing machine similar to the one in Figure 9-7.

9.1.13.3 Test Specimens. The specimens should be per paragrah 9.1.9.3.

9.1.13.4 Conditioning. Test specimens should be conditioned per paragraph 9.1.1.4.

9.1.13.5 Test Procedure.

a. Measure and record specimen length, width, and thickness per paragraph 9.1.2.

b. Weigh and record specimen weight to within 0.01 pounds (5 grams).

c. Prework specimens per paragraph 9.1.16.

d. Compute the displacement(s) for the required strain(s) before aging.

Source: https://assist.dla.mil -- Downloaded: 2016-12-05T12:15Z
Check the source to verify that this is the current version before use.

e. Compress the specimens per paragraph 9.1.9.6 and record the compressive load(s), before aging **(F_b),** at the displacements(s) computed in *step d*.

f. Age specimens for 14 days in environmental chamber. Unless otherwise specified, the chamber conditions should be 120 ± 2º F (49 ± 1º C) and 95 ± 5 % relative humidity.

g. Dry the specimens for 24 hours at 120 ± 2º F (49 ± 1º C) in a mechanically-convected drying oven or environmental chamber.

h. Condition specimens for at least 16 hours per paragraph 9.1.1.4.

i. Compress specimens without further preworking per paragraph 9.1.9.6. Use the thickness and displacements from *steps d and e* and record the compressive load(s) after aging **(F_a)**.

9.1.13.6 Calculation. Change in resistance to compression before and after aging should be calculated as follows:

$$\textbf{Compression resistance change (\%)} = \frac{F_b - F_a}{Fb}(100) \qquad (9:6)$$

where:
Fb = compressive load after preworking but before aging
Fa = compressive load at the same deformation after aging

9.1.14 Flexibility.

9.1.14.1 Scope. This procedure is used to check the cushioning material flexibility.

9.1.14.2 Apparatus. A cylinder or mandrel with a diameter three times (+10 percent) the thickness of the specimen will be required for this test.

9.1.14.3 Test Specimen. Each test specimen should be a strip of the cushioning material with a length approximately 12 times its thickness and a width one half its length.

9.1.14.4 Conditioning. Test specimens must be conditioned per paragraph 9.1.1.4. Specimens to be tested at other than ambient conditions must be conditioned at the test temperature for a period of 4 hours immediately preceding the test. The test cylinder should be conditioned for at least 1/2 hour immediately preceding the test at the same conditions specified for the test specimens.

9.1.14.5 Test Procedure. The specimen should be bent snugly around the mandrel through a total angle of 180 degrees. The specimen should be examined for failure while it is in place on the mandrel. Failures such as cracking, delamination, surface spalling, or any other failure should be noted.

9.1.15 Contact Corrosivity Test.

9.15.1 Scope. The package designer must insure that the cushioning material will not react with the container or the item so as to cause corrosion. The contact corrosivity test is commonly used to determine if the cushioning material may cause corrosion.

9.15.2 Test Procedure. See FED-STD-101, Test Method 3005, “Contact Corrosivity Testing for Packaging Materials”, as an example of a test procedure. Other test procedures may be acceptable. Check with the procuring activity.

Source: https://assist.dla.mil -- Downloaded: 2016-12-05T12:15Z
Check the source to verify that this is the current version before use.

9.1.16 Preworking.

9.1.16.1 Scope. Preworking is a material conditioning procedure which mechanically compression cycles the material. The compression characteristics of many highly compressible materials change during the first few compression cycles, until a threshold is reached. Thereafter, performance remains essentially constant. Preworking the material helps to eliminate this initial variation in compression effects and so reduces the variation in data collected in other test procedures which evaluate cushion compression.

9.1.16.2 Apparatus. A universal testing machine similar to that shown in Figure 9-7.

9.1.16.3 Test Procedure. All preworking should be performed under conditions per paragraph 9.1.1.4, unless otherwise specified. Each specimen should be cyclically loaded 10 times at a rate of 10 to 20--inches (250 to 500--mm) per minute. Unless otherwise specified the deflection should be 65% of the original thickness. After this preworking, the specimen should be rested for a minimum of 1 hour before performing additional testing. The thickness of the specimen after the rest period (Tp) should be measured per paragraph 9.1.2 and recorded.

9.1.17 Fragility Testing.

9.1.17.1 Scope.

The Damage Boundary Test Procedure is recommended for determination of item fragility ratings that are usable with the design methods for shock protection. This method requires the use of a standard programmable shock testing machine (See Figure 9-8). An item's sensitivity to shock generally is referred to as its fragility. This fragility is dependent on three parameters: shock pulse shape, shock pulse velocity change, and shock pulse maximum faired acceleration. For a given item the interrelation of these three parameters defines a damage boundary curve. In turn, the curve establishes the level of protection that must be designed into a shipping container to protect the item from damage in the shipping environment. Refer to paragraph 5.2.1 for a discussion on fragility assessment and the damage boundary curve.

9.1.17.2 Test Procedure. Refer to ASTM D 3332, “Standard Test Methods of Mechanical Shock Fragility of Products, Using Shock Machines”. Follow specification test procedure and report format.

Source: https://assist.dla.mil -- Downloaded: 2016-12-05T12:15Z
Check the source to verify that this is the current version before use.

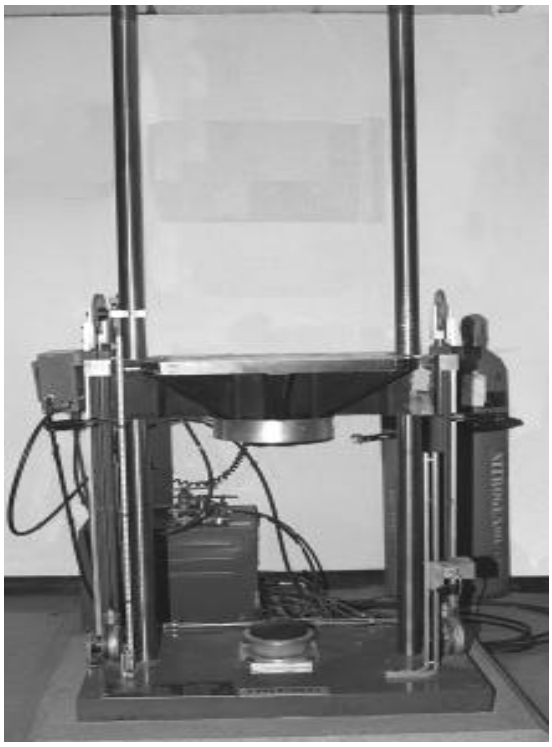

Figure 9-8. Programmable Shock Machine.

Source: https://assist.dla.mil -- Downloaded: 2016-12-05T12:15Z
Check the source to verify that this is the current version before use.

10.0 Notes

10.1 Intended Use. This document provides basic and fundamental information on cushioning materials and their uses. It will provide valuable information and guidance to engineering and technical personnel concerning designing cushioning systems and specifying required cushioning for protecting fragile military equipment.

10.2 Key Word Listing.

Cushion
Cushioning design
Package
Packaging
Package Designer
Packaging design computer program

10.3 Changes from the previous issue. Marginal notations are not used in this revision to identify changes with respect to the previous issue due to the extent of the changes. The following areas have been changed.

-- This version contains both English and metric units.
-- The sections have been arranged according to a six-step design approach shown in Table III.
-- The previous version's Section 5 has been deleted (MIL-C-26861- Ramifications in Cushioning Design).
-- Graphical data is now available in electronic format.
-- Figures have been moved into the text.
-- Equipment photographs have been added.
-- This revision reflects the changes to the Cushion Design Computer Program now called "Package Designer".
-- This document complies with Acquisition Reform Initiatives.

Source: https://assist.dla.mil -- Downloaded: 2016-12-05T12:15Z
Check the source to verify that this is the current version before use.

APPENDIX A

STRESS - STRAIN CURVES

Static compressive stress-strain curves for the materials listed in Table VIII are available apart from this document in electronic format through AFPTEF. The static compressive stress-strain curves are unchanged from the previous version and are not reprinted in this version. You can access these charts on the internet or you can write or phone AFPTEF to get an electronic copy on disk. AFPTEF's internet address, mailing address and phone and fax numbers are listed below.

Paragraph 9.1.9 describes the derivation of stress-strain curves, while paragraphs 5.3.3 and 5.9 describes their use.

All data given herein were derived from empirical tests conducted by contract for AFPTEF under controlled atmospheric conditions of 73ºF and 50 percent relative humidity and are generally representative of commercially available materials (See Table VIII).

AFPTEF
AFMC LSO/LOP
5215 Thurlow Street
Wright Patterson AFB OH 45433-5540

Commercial Phone: 937-257-4519
DSN Phone: 787-4519
Commercial Fax: 937-656-1350
DSN Fax: 986-1350

Internet Address: http://packweb.wpafb.af.mil

Source: https://assist.dla.mil -- Downloaded: 2016-12-05T12:15Z
Check the source to verify that this is the current version before use.

APPENDIX B

PEAK ACCELERATION - STATIC STRESS CURVES

Peak acceleration-static stress curves for the materials listed in Table VIII are for drop heights of 12, 18, 24, 30, 36, 42 and 48 inches. Material thicknesses are given in inches at the end of each curve.

The peak acceleration-static stress curves are available apart from this document in electronic format through AFPTEF. The peak acceleration-static stress curves are unchanged from the previous version and are not reprinted in this version. You can access these charts on the internet or you can write or phone AFPTEF to get an electronic copy on disk. AFPTEF's internet address, mailing address and phone and fax numbers are listed below. Another way to get design curve information is through the Package Designer Program (See 7.3).

For discussion of the derivation peak acceleration-static stress curves, refer to 9.1.5; for details about their use, refer to 5.4.1.

All data given herein were derived from empirical tests conducted by contract for AFPTEF, Wright-Patterson AFB OH, under controlled atmospheric conditions of 73ºF and 50 percent relative humidity and are generally representative of commercially available materials (See Table VIII). However due to manufacturing variations in some materials, shock levels in the resulting package may not be identical to the data represented here. If excessive variation is suspected, free fall drop testing as outlined in paragraph 8.2.2 is encouraged to verify desired levels of protection.

AFPTEF
AFMC LSO/LOP
5215 Thurlow Street
Wright Patterson AFB OH 45433-5540

Commercial Phone: 937-257-4519
DSN Phone: 787-4519
Commercial Fax: 937-656-1350
DSN Fax: 986-1350

Internet Address: http://packweb.wpafb.af.mil

Source: https://assist.dla.mil -- Downloaded: 2016-12-05T12:15Z
Check the source to verify that this is the current version before use.

APPENDIX C

TRANSMISSIBILITY - FREQUENCY CURVES

Transmissibility-frequency curves are for 1, 2, 3, 4, 5, and 6 inches of material thickness at ten different static stress levels are available apart from this document in electronic format through AFPTEF. The transmissibility-frequency curves are unchanged from the previous version and are not reprinted in this version. You can access these charts on the internet or you can write or phone AFPTEF to get an electronic copy on disk. AFPTEF's internet address, mailing address and phone and fax numbers are listed below.

Paragraph 5.5 describes the Derivation and the use of transmissibility curves, while testing for transmissibility is discussed in paragraph 9.1.6.

All data were derived from empirical tests conducted by contract for AFPTEF, under controlled atmospheric conditions of 73ºF and 50 percent relative humidity and are generally representative of commercially available materials (see Table VIII). However, due to manufacturing variations in some materials, transmissibility levels in the resulting package may not be identical to the data represented here. If excessive variation is suspected, transmissibility testing as outlined in paragraph 9.1.6 is encouraged to verify desired levels of protection.

AFPTEF
AFMC LSO/LOP
5215 Thurlow Street
Wright Patterson AFB OH 45433-5540

Commercial Phone: 937-257-4519
DSN Phone: 787-4519
Commercial Fax: 937-656-1350
DSN Fax: 986-1350

Internet Address: http://packweb.wpafb.af.mil

Source: https://assist.dla.mil -- Downloaded: 2016-12-05T12:15Z
Check the source to verify that this is the current version before use.

APPENDIX D

BIBLIOGRAPHY

1. Brandenburg, R. K., and Lee, J. J., "Fundamentals of Packaging Dynamics", 4th Edition, L.A.B., Skaneateles, NY, 1991.

2. Brown, K., "Package Design Engineering", John Wiley and Sons, Inc., New York, 1959.

3. Gigliotti, M. E., "Design Criteria for Plastic Package Cushioning Materials", Plastics Technical Evaluation Center, Dover, NJ, 1962.

4. Grabowski, T. J., "Design and Evaluation of Packages Containing Cushioned Items Using Peak Acceleration Versus Static Stress Data", Shock, Vibration and Associated Environments Bulletin No. 30, part II, Office of the Secretary of Defense, Research and Engineering, Washington DC, 1962.

5. Harris, C. M., and Crede, C. E. "Shock and Vibration Handbook", Third Edition, McGraw-Hill Book Co., New York, 1961.

6. Henny, C., and Leslie, F., "An Approach to the Solution of Shock and Vibration Isolation Problems as Applied to Package Cushioning Materials", Shock, Vibration and Associated Environments Bulletin No. 30, part II, Office of the Secretary of Defense, Research and Engineering, Washington DC, 1962.

7. Klein, E., Ayre, R. S., and Vigness, I., "Fundamentals of Guided Missile Packaging", Naval Research Laboratory, Office of Assistant Secretary of Defense, Research and Development, 1955.

8. Letchford, A., "The Dynamic Performance of Certain Cushioning Materials at Temperatures Down to -50°C", Proceeding of Symposium on Dynamics of Package Cushioning, Royal Radar Establishment, Ministry of Aviation, Malvern England, 1960.

9. Mazzei, J. H., "Confined State Testing of Dynamic Properties of Cushioning Materials", Technical Report FRL-TR-45, Feltman Research and Engineering Laboratories, Picatinny Arsenal, Dover, NJ, 1961.

10. Mustin, S., "Theory and Practice of Cushion Design", Shock and Vibration Information Center, U. S. Department of Defense, Washington DC, 1968.

11. Newton, R.E., "Fragility Assessment Theory and Test Procedure", Monterey Research Laboratory, Inc., Monterey, CA, 1968.

12. Newton, R.E., "Damage Boundary Theory Revisited", American Society of Mechanical Engineers paper, 89-WA/EEP-24, ASME, New York, NY, 1989.

13. Ostrem, F.E. and Godshall, W.D., "An Assessment of the Common Carrier Shipping Environment", U.S. Forest Products Laboratory for U.S. Department of Agriculture, Madison, WI, 1979.

14. Ostrem, F. E., and Libovica, B., "A Survey of Environmental Conditions Incident to the Transportation of Materials", Report PB-204 442, General American Transportation Corp., Niles, IL, 1971.

15. Pearsons, K. S., and Ungar, E. E., "Development of Packaging Material with Constant Restoring Force", WADD TR 60-573, US Air Force, Wright-Patterson AFB, OH, 1961.

Source: https://assist.dla.mil -- Downloaded: 2016-12-05T12:15Z
Check the source to verify that this is the current version before use.

16. Root, Dale, "6-Step Product/Package Development Method", Lansmont Corporation, Monterey, CA 1992.

17. Schueneman, H.H., “Package Engineering, Design and Testing”, Westpak, Inc., San Jose, CA, 1996.

18. Schueneman, H.H., “Vibration Testing of Products and Package Systems”, Westpak, Inc., San Jose, CA, 1995.

19. Stern, R. K., "FPL Dynamic Compression Testing Equipment for Testing Package Cushioning Materials.", U.S. Forest Products Laboratory Report No. 2120, Madison, WI, 1958.

20. Stern, R. K., "Trends in the Isolation of Packaged Items", Shock, Vibration and Associated Environments Bulletin No. 30, part II, Office of the Secretary of Defense, Research and Engineering, Washington DC, 1962.

21. Venetos, M. A., "Determination of Fragility Values for the LN-12 Inertial Guidance Platform and Associated G-200 Gyroscope", Air Force Packaging Technology and Engineering Facility (AFPTEF), DSPT Report No. 73-55, Wright-Patterson AFB, OH, 1973.

22. Whiting G. W., "Effect of Outdoor Storage Environment on Cushioning Properties", Air Force Packaging Technology and Engineering Facility, DSPT Report No. 50, Wright-Patterson AFB, OH, 1973.

Source: https://assist.dla.mil -- Downloaded: 2016-12-05T12:15Z
Check the source to verify that this is the current version before use.

APPENDIX E

INDEX

A
Abrasion *5.13, 6.5.3, 9.17*
Acceleration *3.1, Section 4, Section 8*
Accelerometer *8.2 - 8.2.6*
Aircraft Vibration *4.5.3*
Amplification *3.2, 4.5, 5.2*
Amplifier *8.3.2*
Analysis of Data *8.2.8*
Area Adjustment Techniques *6.3.2*

B
Bases, Cushioned *6.5.4*
Bearing Area *3.2.4, 6.1.4, 6.3.2*
Blocking *3.13, 6.4.3, 6.5.5*
Buckling *6.1, 6.1.4*

C
Calibration *8.2.8, 8.3.4*
Cathode Ray Oscilloscope *8.3.3.1*
Complete Encapsulation *3.2.6, 3.2.8, 6.3.1.1*
Compression Set *3.4, 5.8, 9.19*
Computer Program *Section 7*
Corrosion *3.8, 5.11, 9.1.15*
Corner Pads *3.4.3, 6.1.1, 6.3.1.2*
Cost *5.7*
Creep *3.9, 5.8.2, 9.1.8*
Cushioning Characteristics *Section 5*
Cushioning Design Factors *Section 6*
Cushioning Design Procedure Summary *Section 1, 52*
Cutting *9.1.1.1*

D
Damage Boundary Curve *5.2.1.3, 9.1.17*
Damping *3.15-3.17, 4.4.1, 8.1.3, 8.2.1*
Data Acquisition System *8.3.3.2*
Density *5.6, 9.1.1.2.6, 9.1.3*
Disassembly of Large, Fragile Items *6.5.2*
Displacement *3.20, 5.3.3.1, 8.2.3*
Drop Height *4.4.3*
Drop Testing *Section 8*
Dunnage *3.21, 6.4*
Dusting *3.22, 3.23, 5.10*
Dynamic Compression *9.1.5*

E
Example Problems *Sections 6 & 7*

Source: https://assist.dla.mil -- Downloaded: 2016-12-05T12:15Z
Check the source to verify that this is the current version before use.

F
Flatness *9.1.1.2.4*
Flexibility *5.9, 9.1.14*
Floating Items *6.3.2.4*
Foam-In-Place *6.5.5*
Fragility *3.29, 5.2, 8.2.1*
Fragility Assessment of Item *5.2.1*
Fragility Ratings, Typical *5.2.1.1*
Fragility Testing of Item *9.17*
Fragmentation *3.31, 5.10, 9.1.11*
Frequency *3.32 - 3.37*
Frequency Response Requirements *8.3.1*
Fungus Resistance *5.14, 9.1.12*

H
Homogeneity *9.1.1.2.1*
Hydrolytic Stability *3.38, 5.12, 9.1.13*

I
Immobilizing *3.39, 6.3.4.3*
Impact Testing *Section 8*
Instrumentation *Section 8*
Irregularly Shaped Items *6.3.2.3*

L
Level A *4.3.1, 4.4.3.2*
Level B *4.3.2, 4.4.3.2*

M
Measuring Dimensions *9.1.2*
Moisture Content *9.1.4*
Molded Pads *6.3.2.4.2*

N
Natural Frequency Calculations *5.5.4*
Nesting Items *3.41, 6.5.1*

O
Orientation and Numbering of Package and Item *8.2.6*
Overshoot *3.42, 8.3.2.3.1*

P
Package Designer Computer Program *Section 7*
Pallets, Cushioned *6.5.4*
Parallel Surfaces *9.1.1.2.3*
Peak Acceleration Definition *3.45*
Perpendicular Surfaces *9.1.1.2.2*
Piezoresistive/Piezoelectric Accelerometers *3.46, 8.3.2*
Prework *3.47, 9.1.16*
Product Improvement Feedback *5.2.2*
Projections, Padding *6.4.2*
Pulses *3.48, 4.4, 8.3.3*

Source: https://assist.dla.mil -- Downloaded: 2016-12-05T12:15Z
Check the source to verify that this is the current version before use.

R
Railway Vibration *4.5.1*
Rebound Effects *8.1.1*
Recording Devices *8.3.3*
Recoverability *3.49, 5.8*
Resonance *3.50, 8.3.1, 8.3.2.1.1*
Rough Handling *4.2*

S
Sample Preparation *9.1.1*
Ship Vibration *4.5.4*
Shock Absorption *4.4, 5.4*
Shock Isolation *5.3*
Shock Design Procedure *6.1*
Shock Measurement *4.4, 8.3*
Shock Spectrum *4.4.1*
Simulated Test Items *8.2.5*
Spring Rate *3.5.8*
Static Compressive Force-Displacement *5.8.1, 9.1.9*
Strain, Definition *3.59*
Stress, Definition *3.60*

T
Temperature Effects on Curves *5.4.2*
Tensile Strength *5.9, 9.1.10*
Transducer *3.61, 8.2.4, 8.3.2*
Transmissibility *3.62, 5.5.3, 9.1.6*
Transmissibility Curve Development *5.5.5, 9.1.17*
Truck Vibration *4.5.2*

V
Velocity *3.63, 4.4, 5.3.3.3*
Vibration Definitions *3.67-3.71*
Vibration Design Procedure *6.2*
Vibration Caused by Shipment *4.5*
Vibration Isolation *5.5*
Viscoelastic *3.72, 5.3.3, 5.5.2.1, 8.1.3*
Voids, Filling *6.4.1*

Source: https://assist.dla.mil -- Downloaded: 2016-12-05T12:15Z
Check the source to verify that this is the current version before use.

Custodians

Air Force - 69
Navy - AS
Army - AR

Review

Air Force - 10, 11, 99
Navy - MC, OS, SA, SH, YD2
Army - AT, CR4, SM

Preparing Activity

Air Force - 69

Project No. - PACK 1067

Source: https://assist.dla.mil -- Downloaded: 2016-12-05T12:15Z
Check the source to verify that this is the current version before use.

STANDARDIZATION DOCUMENT IMPROVEMENT PROPOSAL

INSTRUCTIONS

1. The preparing activity must complete blocks 1, 2, 3, and 8. In block 1, both the document number and revision letter should be given.
2. The submitter of this form must complete blocks 4, 5, 6, and 7.
3. The preparing activity must provide a reply within 30 days from receipt of the form.

NOTE: This form may not be used to request copies of documents, nor to request waivers, or clarification of requirements on current contracts. Comments submitted on this form do not constitute or imply authorization to waive any portion of the referenced document(s) or to amend contractual requirements.

I RECOMMEND A CHANGE:	1. DOCUMENT NUMBER MIL-HDBK-304C	2. DOCUMENT DATE (YYMMDD) 970601

3. DOCUMENT TITLE PACKAGE CUSHIONING DESIGN

4. NATURE OF CHANGE *(Identify paragraph number and include proposed rewrite, if possible. Attach extra sheets as needed.)*

5. REASON FOR RECOMMENDATION

6. SUBMITTER

a. NAME *(Last, First, Middle Initial)*	b. ORGANIZATION	
c. ADDRESS *(Include Zip Code)*	d. TELEPHONE *(Include Area Code)* (1) Commercial (2) AUTOVON *(If applicable)*	7. DATE SUBMITTED *(YYMMDD)*

8. PREPARING ACTIVITY

a. NAME	b. TELEPHONE *(Include Area Code)* (1) Commercial	(2) AUTOVON
Air Force Packaging Technology and Engineering Facility	937-257-4519	787-4519
c. ADDRESS *(Include Zip Code)* AFMC LSO/LOP 5215 Thurlow Street Wright-Patterson AFB OH 45433-5540	IF YOU DO NOT RECEIVE A REPLY WITHIN 45 DAYS, CONTACT: Defense Quality and Standardization Office 5203 Leesburg Pike, Suite 1403, Falls Church, VA 22041-3466 Telephone (703) 756-2340 AUTOVON 289-2340	

Source: https://assist.dla.mil -- Downloaded: 2016-12-05T12:15Z
Check the source to verify that this is the current version before use.