MILITARY SPECIFICATION

RELAYS, ELECTROMAGNETIC,

GENERAL SPECIFICATION FOR

This specification is approved for use by all Departments and Agencies of the Department of Defense

1. SCOPE

1.1 Scope. This specification covers the general requirements for electrical relays with contact ratings up to and including 10 amperes for use in electronic, communication, and other type applications (see 6.1).

CAUTION: The use of any coil voltage less than the rated coil voltage will compromise the operation of the relay.

1.2 Classification. Relays shall be classified as specified herein.

1.2.1 Enclosure design. The enclosure design is identified by a single digit in accordance with table I.

TABLE I. Enclosure design.

Symbol	Type
3 - - - - - - - - - - -	Sealed (other than hermetically)
4 - - - - - - - - - - -	Hermetically sealed (A relay contained within an enclosure that is sealed by fusion to insure a low rate of gas leakage-This usually refers to metal-to-metal, metal to ceramic, or metal to glass sealing.)

1.2.2 Vibration characteristic. The vibration characteristic is identified by a single digit in accordance with table II.

TABLE II. Vibration characteristic.

Symbol	Maximum acceleration value	Frequency range Hz
1 - - - - - - - - - - -	0.060" D.A.	10 to 55
2 - - - - - - - - - - -	10G	10 to 500
3 - - - - - - - - - - -	15G	10 to 2,000
4 - - - - - - - - - - -	20G	10 to 2,000
5 - - - - - - - - - - -	30G	10 to 3,000
6 - - - - - - - - - - -	Random (see 3.1)	50 to 2,000

1.2.3 Temperature range. The temperature range is identified by a single letter in accordance with table III.

Beneficial comments (recommendations, additions, deletions) and any pertinent data which may be of use in improving this document should be addressed to. Naval Electronic Systems Command, ATTN: ELEX 8111, Department of the Navy, Washington, D.C. 20360 by using the self-addressed Standardization Document Improvement Proposal (DD Form 1426) appearing at the end of this document or by letter.

FSC 5945

Source: https://assist.dla.mil -- Downloaded: 2016-11-13T03:20Z
Check the source to verify that this is the current version before use.

TABLE III. Temperature range.

Symbol	Range
	°C
A - - - - - - - - -	-55 to +85
B - - - - - - - - -	-65 to +125

1.2.4 Shock type. The shock type is identified by a single digit in accordance with table IV.

TABLE IV. Shock type.

Symbol	Shock type (in accordance with MIL-STD-202)
1 - - - - - - - - - - -	50G (test condition A method 213)
2 - - - - - - - - - - -	75G (test condition B method 213)
3 - - - - - - - - - - -	100G (test condition C method 213)
5 - - - - - - - - - - -	High-impact (method 207)

1.2.5 Military part number. The military part number shall consist of the letter "M", the basic number of the specification sheet, and an assigned dash number as shown in the following example (see 3.1, 6.2.1, and 6.2.2)

EXAMPLE

M5757	/10-	001
Military specification	Specification sheet number	Dash number

2. APPLICABLE DOCUMENTS

2 1 Government specifications and standards. Unless otherwise specified, the following specifications and standards, of the issue listed in that issue of the Department of Defense Index of Specifications and Standards specified in the solicitation, form a part of this specification to the extent specified herein.

SPECIFICATIONS

FEDERAL

J-W-1177 - Wire, Magnet, Electrical.
NN-P-71 - Pallet, Material Handling, Wood, Stringer Construction, 2 Way and 4 Way (Partial).
QQ-S-571 - Solder, Tin Alloy, Lead-Tin Alloy, and Lead Alloy.
QQ-S-781 - Strapping, Steel, and Seals.
ZZ-R-765 - Rubber, Silicone.
LLL-R-626 - Rosin, Gum Wood, and Tall Oil.
PPP-B-566 - Boxes, Folding, Paperboard.
PPP-B-585 - Box, Wood, Wirebound
PPP-B-601 - Boxes, Wood, Cleated Plywood.
PPP-B-621 - Box, wood, Nailed and Lock Corner.
PPP-B-636 - Box, Shipping, Fiberboard.
PPP-B-676 - Boxes, Setup.
PPP-T-60 - Tape Packaging, Waterproof.
PPP-T-76 - Tape Packaging, Paper (For Carton Sealing).

MILITARY

MIL-I-10 - Insulating Materials, Electrical, Ceramic, Class L.
MIL-M-14 - Molding Plastics and Molded Plastic Parts, Thermosetting.
MIL-C-17 - Cables, Radio Frequency, Flexible and Semirigid, General Specification For.

Source: https://assist.dla.mil -- Downloaded: 2016-11-13T03:20Z
Check the source to verify that this is the current version before use.

MIL-P-116	-	Preservation-Packaging, Methods of.
MIL-P-997	-	Plastic Material, Laminated, Thermosetting, Electrical Insulation Sheets, Glass Cloth, Silicone Resin.
MIL-S-12883	-	Sockets and Accessories, for Plug-in Electronic Components, General Specification For.
MIL-P-15037	-	Plastic Sheet, Laminated, Thermosetting, Glass-Cloth, Melamine-Resin.
MIL-P-15047	-	Plastic Material, Laminated, Thermosetting, Sheets, Nylon Fabric Base, Phenolic-Resin.
MIL-S-19500	-	Semiconductor Devices, General Specification For.
MIL-G-45204	-	Gold Plating, Electrodeposited.
MIL-P-46133	-	Plastic Molding and Extrusion Material, Poly (Aryl Sulfone Ether) Resin Thermoplastic.
MIL-S-55433	-	Switch Capsules, Dry Reed Type, General Specification For.

(See supplement 1 for list of associated specification sheets.)

STANDARDS

FEDERAL

FED-STD-H28	-	Screw Thread Standards For Federal Service.

MILITARY

MIL-STD-105	-	Sampling Procedures and Tables for Inspection by Attributes.
MIL-STD-129	-	Marking for Shipment and Storage.
MIL-STD-147	-	Palletized Unit Loads for 40" x 48" Pallets.
MIL-STD-202	-	Test Methods for Electronic and Electrical Component Parts.
MIL-STD-454	-	Standard General Requirements for Electronic Equipment.
MIL-STD-794	-	Part and Equipment, Procedures for Packaging and Packing of.
MIL-STD-810	-	Environmental Test Methods.
MIL-STD-883	-	Test Methods and Procedures for Microelectronics.
MIL-STD-965	-	Parts Control Program.
MIL-STD-1188	-	Commercial Packaging of Supplies and Equipment.
MIL-STD-1285	-	Marking of Electrical and Electronic Parts.
MIL-STD-45662	-	Calibration Systems Requirements.

(Copies of specifications, standards, handbooks, drawings, and publications required by manufacturers in connection with specific acquisition functions should be obtained from the contracting activity or as directed by the contracting officer.)

2.2 Other publications. The following document forms a part of this specification to the extent specified herein. The issues of the documents which are indicated as DoD adopted shall be the issue listed in the current DoDISS and the supplement thereto, if applicable.

Underwriters Laboratories Inc

UL94 - Tests for Flammability of Plastic Materials.

(Application for copies should be addressed to UL, Publications Stock, 333 Pfingsten Road, Northbrook, IL 60062.)

(Industry association specificatins and standards are generally available for reference from libraries. They are also distributed among technical groups and using Federal agencies.)

Source: https://assist.dla.mil -- Downloaded: 2016-11-13T03:20Z
Check the source to verify that this is the current version before use.

3. REQUIREMENTS

3.1 Specification sheets. The individual item requirements shall be as specified herein and in accordance with the applicable specification sheets. In the event of any conflict between requirements of this specification and the specification sheets, the latter shall govern (see 6.2.1).

3.2 Relay categories. Relays furnished under this specification shall be category I, II, or III as defined herein.

3.2.1 Category I. Relays completely defined by a military specification sheet (see 3.1, 4.5, and 6.2.1).

3.2.2 Category II. Relays the same as category I, except for minor differences such as terminations, mounting means, or coil resistance, which do not change the basic design or construction of the qualified relay. Category II relays shall be procured from a source listed on the applicable qualified products list for the particular similar product in category I. Category II relays are nonstandard 1/ (see 4.6.1 and 6.2.2).

3.2.3 Category III. Relays not covered by specification sheets. These relays are nonstandard 1/ (see 4.6.2 and 6.2.3).

3.3 Qualification. Category I relays furnished under this specification shall be products which are qualified for listing on the applicable qualified products list at the time set for opening of bids (see 4.5 and 6.3).

3 4 Materials. The materials shall conform to requirements specified herein. When a definite material is not specified, the selection of material shall be at the discretion of the relay manufacturer. Materials specified shall be such that the relays will meet the performance requirements and product characteristics specified herein. After qualification, any change of parts or materials shall be submitted to the Government qualifying activity for approval. Acceptance or approval of any constituent part or material shall not be construed as a guaranty of acceptance of the finished product.

3.4.1 Metals. Metals shall be of a corrosion-resistant type or shall be plated or treated to resist corrosion, except that zinc, cadmium, or unfused pure tin plating shall not be used internally. Zinc or cadmium shall not be used externally. Unfused tin plating shall have a plating thickness of 200 microinches minimum if used for external parts.

3.4.1.1 Dissimilar metals. When dissimilar metals are used in intimate contact with each other, protection against electrolysis and corrosion shall be provided. The use of dissimilar metal in contact, which tends toward active electrolytic corrosion (particularly brass, copper, or steel used in contact with aluminum or aluminum alloy), is not acceptable. However, metal spraying or metal plating of dissimilar base metals to provide similar or suitable abutting surfaces is permitted. Dissimilar metals shall be as defined in 6.5 through 6.5.4, inclusive. In hermetic seals, the 0.25 volt difference between the header material and the housing material is not applicable. The use of dissimilar metals separated by suitable insulating material is also permitted. This paragraph does not prohibit the use of dissimilar metals within hermetically sealed enclosures. Metals and finishes shall meet the environmental requirements of this specification.

3.4.1.2 Magnet wire. Magnet wire shall conform to J-W-1177, except when wire not covered by J-W-1177 is required due to physical size or temperature range consideration, then a suitable wire may be substituted; as evidenced by meeting the performance requirements of this specification.

3.4.1.3 Mercury. The use of mercury or mercury compounds is prohibited.

3.4.1.4 Magnesium. The use of magnesium or magnesium alloys is prohibited.

1/ Testing of category II and III relays shall be as specified in MIL-STD-965.

Source: https://assist.dla.mil -- Downloaded: 2016-11-13T03:20Z
Check the source to verify that this is the current version before use.

3.4.2 Nonmetals Nonmetals, including protective finishes shall be moisture resistant, self-extinguishing, shall not support combustion, give off noxious gases in harmful quantities, give off gases in sufficient quantity to cause explosion of sealed enclosures, shall not support fungus growth, and shall not be adversely affected by weathering in aircraft, missile, and spacecraft fluids at the specified temperature (see 3.1). The manufacturer shall submit certification to the Government qualifying activity that materials will not support fungus growth (see requirement 4 of MIL-STD-454). Materials in hermetically sealed envelopes are not required to meet the moisture and fungus resistance requirements

3 4.2 1 Plastic material. Except as specified herein, plastic material shall conform to MIL-M-14 and MIL-P-46133 for molded material, MIL-P-997, MIL-P-15037, and MIL-P-15047 for laminated material. Other types of plastic materials possessing superior characteristics may be used, provided the manufacturer submits acceptable evidence to the activity responsible for qualification that such material meets the performance requirements of MIL-M-14, MIL-P-997, MIL-P-15037, MIL-P-15047 or MIL-P-46133, whichever is applicable. In addition to these specifications and the requirements of 3.4.2, the manufacturer shall submit certification to the Government qualifying activity that materials meet the requirements of UL94, material classed 94V-0.

3.4.2.2 Ceramic. Ceramic insulation material shall conform to grade L422 (or better) of MIL-I-10. All external ceramic surfaces shall be glazed in accordance with MIL-I-10.

3 4.2.3 Rubber. Rubber shall conform to ZZ-R-765

3 5 Design and construction. Relays shall be of the design, construction, weight, and physical dimensions specified (see 3 1). Relays shall be constructed to insure proper operation when mounted in any position. Unless otherwise specified (see 3.1), relays shall be designed for continuous duty at rated voltage and current. Relays shall be sealed, or hermetically sealed as specified (see 3.1).

3.5.1 Threaded parts. All threaded parts shall be in accordance with FED-STD-H28. Where practical, all threads shall be in conformity with the coarse-thread series. The fine-thread series may be used only for applications that show a definite advantage through their use. Where a special diameter-pitch combination is required, the thread shall be of American National Form and of any pitch between 16 and 36, which is used in the fine-thread series. Terminal threads shall be class 2A and 2B for external and internal threads, respectively.

3.5.1.1 Engagement of threaded parts. All threaded external parts shall engage by at least three full threads

3.5.2 Case. The case shall not be electrically connected to the contacts or coil, however, it may be used as part of the magnetic circuit.

3 5.3 Cover. The relay cover shall be rugged in design, constructed of high-impact materials, and shall be securely mounted on the relay.

CAUTION In order to reduce personnel hazard, metal covers shall be provided with a means for grounding.

3.5 4 Sealing process (enclosure 4 relays only). Relays shall be dried, degassed, and backfilled with gas having a dew point less than -65°C (see 6.4). Unless otherwise specified (see 3.1 and 6.2 3), relays shall be sealed by welding (for case sizes having a volume of 2 cubic inches or less) or by soldering, brazing, or welding (for case sizes having a volume greater than 2 cubic inches) (NOTE The volume shall be computed using the external dimensions of the relay case, disregarding any mounting bracket).

3.5.5 Contacts. Contacts shall have the load ratings and arrangements (see MIL-STD-1285) as specified (see 3.1 and 6.2.3) and shall be capable of carrying the maximum rated current continuously as well as making and breaking the specified current.

3.5.5.1 Orientation of contact motion (dry reed relays only). The flat surface of the reed contact shall be parallel to two sides at right angles of the relay housing unless otherwise specified (ses 3.1 and 6 2.3).

Source: https://assist.dla.mil -- Downloaded: 2016-11-13T03:20Z
Check the source to verify that this is the current version before use.

3.5.6 Coils. Coils shall be adequately insulated electrically from the frame, the contacts, and the case. The resistance and rated voltage (or current) shall be as specified (see 3.1 and 6.2.3). Coils shall be designed for continuous operation at rated voltage (or current) except that coils of latching relays shall be designed for the duty cycle specified (sees 3.1 and 6.2.3). Coils shall be rigidly secured to prevent any permanent change in the relative position of the parts.

3.5.6.1 Terminal identification (enclosure 4 relays only). Unless otherwise specified (see 3 1 and 6.2.3), a bead of contrasting color shall be used to designate the X1 (positive, if applicable) terminal (see figure 1 and MIL-STD-1285).

3.5.7 Circuit diagram. The circuit diagram, as specified (see 3.1 and 6.2.3), shall be a terminal view. Circuit symbols shall be in accordance with MIL-STD-1285 and figure 1. For relays without an orientation tab, the circuit diagram, as specified (see 3.1) shall be orientated so that when the relay is held with the circuit diagram right side up as shown (see 3.1) and rotated away from the viewer about a horizontal axis through the diagram until the header terminals face the viewer, then each terminal shall be in the location shown in the circuit diagram.

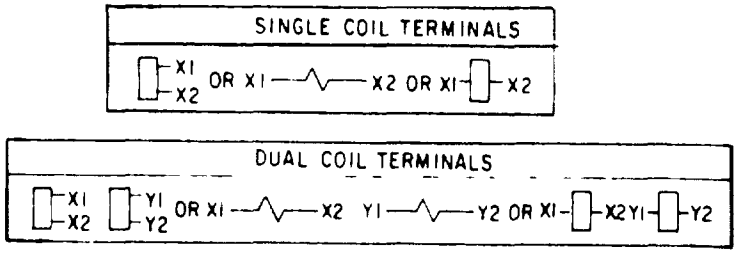

FIGURE 1 Symbols and marking for relay coil terminals

3.5.8 Mounting means (see 3.1 and 6.2.3).

3.5.8.1 Socket. Plug-in relays shall be so designed that the weight of the relay will be supported and the stability of the mounting will be provided by means other than the terminals.

3.5.8.2 Bracket. Mounting brackets shall be an integral part of the relay housing or shall be securely attached thereto in a manner to prevent any movement between the relay and the mounting bracket.

3.5.8.3 Stud mounting means. Each stud shall be supplied with two flat washers, one nut, and one lockwasher. For direct Government orders, hardware shall be assembled on the stud. Mounting hardware may be omitted when specified (see 6.2).

3.5.9 Terminals (see 3.1 and 6.2.3). Terminals shall be as specified herein

3.5.9.1 Solder. Unless otherwise specified, solder terminals may be of any shape, and shall be capable of being readily soldered. Solder-lug terminals shall be designed to accommodate two conductors - each rated to carry the maximum rated current of the contact or coil terminated Unless otherwise specified, solder terminals shall not be gold plated.

3.5.9.2 Pin type.

3.5.9.2.1 Printed-circuit. Terminals shall be spaced in multiples of 0.050 inch for compatibility with printed-circuit grid spacing.

3.5.9.2.2 Plug-in. Plug-in terminals shall conform to the arrangements or dimensions necessary for proper mating with the applicable connectors or sockets covered by MIL-S-12883. Unless otherwise specified, terminals shall be gold plated in accordance with MIL-G-45204, type II, class 1, over nickel plate 0.0001 to 0.0003 inch thick.

Source: https://assist.dla.mil -- Downloaded: 2016-11-13T03:20Z
Check the source to verify that this is the current version before use.

3.5.9.3 Stud-terminal. Stud terminals shall be supplied with two flat washers, one nut, and one lockwasher. The size of the stud thread and length shall be as specified. For direct Government orders, hardware shall be assembled on the stud. Mounting hardware may be omitted when specified (see 6.2).

3 5 9.4 Integrated. Relays designed for removable and insertable terminations shall accept 0.040- to 0.083-inch diameter wire leads.

3.5.10 Switch capsules Unless otherwise specified (see 3 1 and 6.2 3), switch capsules used in dry reed relays shall conform to MIL-S-55433, switch capsule leads shall not be used as terminals.

3.5.11 Rectifier diodes. Internal rectifier diodes used in relays designed for coil operation at 115 volts shall be silicon semiconductors with a minimum peak inverse voltage rating of 600 volts and shall conform to MIL-S-19500

3.5.12 Springs Springs shall be fabricated from noncorrosive materials and may be plated, except that zinc, cadmium, or unfused tin plating shall not be used.

3.5.13 Solder. Solder shall not be used primarily for obtaining mechanical strength All flux shall be removed after soldering.

3 5 14 Stabilization of permanent magnets. Permanent magnets and magnetic assemblies shall be artificially aged to prevent decay of flux levels. The residual flux in the permanent magnetic assemblies shall be reduced to a level where it will not be affected by demagnetizing forces encountered in normal service, handling, and any tests specified herein The magnetic assembly shall have a specific flux density at any given temperature over the temperature range specified (see 3.1 and 6 2.3).

3 6 Internal moisture (when specified, see 3.1 and 6.2.3). When relays are tested as specified in 4 8.2, any relay shall have a final measurement of 10,000 megohms or greater.

3.7 Run-in (when specified see 3 1 and 6 2 3) When relays are tested as specified in 4.8 3, the dynamic contact resistance (or voltage drop) shall be as specified in table V

TABLE V. Dynamic contact resistance (or voltage drop)

Contact rating or relay type	Load conditions	Maximum allowable dynamic contact resistance (or voltage drop)
High level	Rated current at rated voltage	10% open-circuit voltage
Intermediate current	Level 1 (see 4 8.30 1) Level 2 (see 4.8 30.2)	1 ohm 3 ohms
Low level	10 to 50 μA at 10 to 50 mV open-circuit (maximum dc or peak ac)	100 ohms
Dry reed	10 mA maximum at 30 mV open-circuit (maximum dc or peak ac)	50 ohms

3.8 Solderability (applicable to solder terminals). When relays are tested as specified in 4.8.4, the dipped surface of solid wire-lead and pin terminals shall be at least 95 percent covered with a continuous new solder coating. The remaining 5 percent may contain only small pinholes or rough spots, these shall not be concentrated in one area. Bare base metal where the solder dip failed to cover the original coating is an indication of poor solderability, and shall be cause for failure For solder-lug terminals greater than 0.045 inch in diameter, 95 percent of the total length of fillet, which is between the standard wrap wire and the terminal, shall be tangent to the surface of the terminal being tested, and shall be free of pinholes, voids, etc. A ragged or interrupted line at the point of tangency between the fillet and the terminal under test shall be considered a failure.

Source: https://assist.dla.mil -- Downloaded: 2016-11-13T03:20Z
Check the source to verify that this is the current version before use.

3.9 Seal

3.9.1 Test I (enclosure 3 relays only). When relays are tested as specified in 4.8.5.1, there shall be no evidence of leakage.

3.9.2 Test II (enclosure 4 relays only). When relays are tested as specified in 4 8.5.2, there shall be no leakage in excess of the applicable value specified in the following

Sealed volume of case	Maximum allowable leakage
Greater than 2 cubic inches - - - - - -	10^{-6} atm cm^3/s
2 cubic inches or less- - - - - - - - -	10^{-8} atm cm^3/s

3.10 Insulation resistance. When relays are tested as specified in 4.8.6, the insulation resistance shall be 10,000 megohms or more, unless otherwise specified (see 3.1 and 6.2.3).

3.11 Dielectric withstanding voltage. When tested as specified in 4.8.7, relays shall withstand the test voltage specified without damage, and there shall be no leakage current in excess of 1.0 milliampere (mA) nor evidence of damage due to arcing (air discharge), flashover (surface discharge), or insulation breakdown (puncture discharge). After high level life tests, the dielectric withstanding voltage should be at least 75 percent of the initial seal level value (see 3.1).

3.12 Electrical characteristics.

3.12.1 Static contact resistance (or voltage drop). When relays are tested as specified in 4.8.8.1, the static contact resistance (or voltage drop) of any pair of mated contacts shall not exceed the applicable values specified in table VI.

TABLE VI. Static contact resistance (or voltage drop).

Contact rating or relay type	Load conditions	Maximum allowable static contact resistance (or voltage drop)	
		Before life	During and after life
High level (more 2 amp but not in excess of 10 amp)	Rated current at 6 or 28 V dc or peak ac	100 mV	200 mV
High level (2 amp or less)	Rated current at 6 or 28 V dc or peak ac	0 05 ohm	0.10 ohm
Intermediate current	100 ±5 mA at 28 V dc or peak ac	0.05 ohm	Level 1-1.0 ohm, Level 2-3.0 ohms
Low level	10 mA maximum at 6 V open-circuit (maximum dc or peak ac)	0.05 ohm	0.15 ohm
Dry reed	10 mA maximum at 30 mV open-circuit (maximum dc or peak ac)	0.20 ohm	2.0 ohms

3.12.2 Pickup, hold, and dropout voltage (or current). When relays are tested as specified in 4.8.8.2, the pickup, hold, and dropout voltage 2/ shall be as specified (see 3.1 and 6.2.3).

3.12.3 DC coil resistance. When relays are tested as specified in 4.8.8.3, the dc coil resistance shall be as specified (see 3.1 and 6.2.3).

3.12.4 Coil inductance (when specified, see 3.1 and 6.2.3). When relays are tested as specified in 4.8.8.4, the coil inductance shall be as specified (see 3.1 and 6.2.3).

2/ Wherever "voltage" is used herein, it is considered to include "current" if applicable.

Source: https://assist.dla.mil -- Downloaded: 2016-11-13T03:20Z
Check the source to verify that this is the current version before use.

3.12.5 Operate and release time. When relays are tested as specified in 4.8.8.5, the operate and release time shall be as specified (see 3.1 and 6.2.3). In multipole relays, all poles of each relay shall function simultaneously within 1 millisecond. Double throw contacts shall show no evidence of an open contact being closed concurrently with a closed contact unless make-before-break action is specified (see 3.1)

3 12.6 Contact bounce When relays are tested as specified in 4.8.8 6, the duration of contact bounce shall not exceed 2 milliseconds (ms) unless otherwise specified (see 3.1 and 6.2.3).

3 13 Thermal shock and high and low temperature operation. When tested as specified in 4.8 9, relays shall meet the following requirements at each temperature extreme

Insulation resistance - - - - - - - - - - - - - -	As specified in 3.10. At high temperature, insulation resistance between coil and case shall be 500 megohms or more.
Pickup and dropout voltage (or current) - - - -	As specified in 3.12.2
Operate and release time- - - - - - - - - - - - -	As specified in 3.12.5.
Visual examination- - - - - - - - - - - - - - - -	No cracking, peeling, or flaking of the finish

3 14 Shock types 1, 2, 3, and 5. When relays are tested as specified in 4.8.10, there shall be no evidence of mechanical or electrical damage, no closing of open contacts, and no opening of closed contacts in excess of the following

Types 1, 2, and 3	- 10 microseconds (μs) duration
Type 5	- 20-ms duration, unless otherwise specified (see 3.1 and 6.2.3).

3 15 Vibration. When relays are tested as specified in 4 8.11, there shall be no opening of closed contacts in excess of 10 μs unless otherwise specified (see 3.1 and 6.2 3), and there shall be no closing of open contacts in excess of 10 μs Following this test there shall be no evidence of loosening of parts

3 16 Acceleration (when specified, see 3.1 and 6.2.3). When relays are tested as specified in 4 8.12, the contacts of the relay shall remain in the de-energized condition with no voltage across the coil and in the energized position when the coil voltage is reduced from the specified rated voltage to one half of the specified rated voltage. Latching-type relays shall remain in each latched position with no voltage on the coil. Following the test, there shall be no structural failure, loss of seal, or other damage which might impair the operation of the relay.

3 17 Terminal strength. When relays are tested as specified in 4.8 13, there shall be no evidence of loosening or breaking of the terminals, and there shall be no deformation to the threads of screw terminals, no bending (see NOTE) of a pin or damage to the insulating base of plug-in relays, nor shall there be any other damage which would adversely affect the normal operation of the relay.

NOTE Bending of solder terminals shall not be construed as damage, bending of plug-in terminals shall not be construed as damage provided they can be re-formed in a manner to permit proper mating with the applicable socket.

Source: https://assist.dla.mil -- Downloaded: 2016-11-13T03:20Z
Check the source to verify that this is the current version before use.

3.18 Moisture resistance (enclosure 3 relays only). When relays are tested as specified in 4.8.14, there shall be no evidence of breaking, cracking, chipping, or loosening of terminals. Immediately after step 6 of the final cycle, the insulation resistance shall be 100 megohms or more. After the 24-hour drying period, relays shall meet the following requirements, as applicable

Dielectric withstanding voltage - - - - - - - - - - As specified in 3.11.

Insulation resistance - - - - - - - - - - - - - - - - As specified in 3.10.

Static contact resistance - - - - - - - - - - - - - - As specified in 3.12.1

Pickup and dropout voltage (or current) - - - - - As specified in 3.12.2.

3 19 Magnetic interference (when specified, see 3.1 and 6.2.3). When relays are tested as specified in 4.8.15, the pickup and dropout values shall be within the limits specified (sees 3.1 and 6.2.3).

3.20 Acoustical noise (when specified, see 3.1 and 6.2.3). When relays are tested as specified in 4 8 16, there shall be no closing of open contacts, no opening of closed contacts in excess of 10-μs duration, and no evidence of damage.

3.21 Sand and dust (enclosure 3 relays only). When relays are tested as specified in 4.8.17, there shall be no evidence of damage sufficient to impair the operation of the relay.

3 22 Contact sticking (when specified, see 3.1 and 6.2.3). When relays are tested as specified in 4.8.18, the release time shall be as specified (see 3.1 and 6.2.3).

3.23 Coil life (unless otherwise specified, see 3.1 and 6.2.3) (not applicable to intermittent duty delays). When relays are tested as specified in 4.8.19, there shall be no evidence of damage.

3 24 Resistance to soldering heat (when specified, see 3.1 and 6.2.3). When relays are tested as specified in 4.8.20, there shall be no damage which would adversely affect normal operation of the relay.

3.25 Salt spray (corrosion). When relays are tested as specified in 4.8.21, there shall be no evidence of breaking, cracking, chipping, or flaking of the finish, nor exposure of the base metal, due to corrosion, which would adversely affect the application or performance characteristics of the relay

3 26 Contact operating differential (when specified, see 3.1 and 6.2 3). When relays are tested as specified in 4.8.22, the contact operating differential (see 6.7) shall be as specified (see 3.1 and 6.2.3).

3.27 Contact noise (when specified, see 3.1 and 6.2.3). When relays are tested as specified in 4 8 23, the contact noise shall have decayed to less than 0.05 millivolt (mV) peak-to-peak in less than 10 ms.

3.28 Cross-talk (dry reed relays only and other types when specified, see 3.1 and 6.2.3). When relays are tested as specified in 4.8.24, the attenuation shall be -20 decibels (dB) minimum.

3.29 Capacitance (when specified, see 3.1 and 6.2.3). When relays are tested as specified in 4.8.25, the capacitance shall not exceed the value specified (see 3.1 and 6.2.3).

3.30 Thermal EMF (when specified, see 3.1 and 6.2.3). When relays are tested as specified in 4.8.26, the thermal EMF (voltage) shall be as specified (see 3.1 and 6.2 3)

3 31 Overload (applicable to high level relays only). When relays are tested as specified in 4.8.27, the voltage drop across closed contacts shall be not more than 5 percent of applied circuit load voltage and the voltage across open contacts shall be not less than 95 percent of applied circuit voltage. The case-to-ground fuse shall remain electrically continuous.

Source: https://assist.dla.mil -- Downloaded: 2016-11-13T03:20Z
Check the source to verify that this is the current version before use.

3.32 Load transfer, 3 phase ac (when specified, see 3.1 and 6.2.3). When relays are tested as specified in 4.8.28, there shall be no phase-to-phase arcing, nor welding (sticking) of relay contacts. The case-to-ground fuse shall remain electrically continuous.

3.33 Life. When relays are tested as specified in 4.8.29, during cycling, the contact miss detector's monitoring level shall be less than 100 ohms for low level testing and less than 5 percent of the open-circuit voltage for high level testing and the voltage across open contacts shall be 95 percent or more of the open circuit voltage. The case to ground fuse shall remain electrically continuous. The static contact resistance during and following cycling shall not be greater than twice the initial specified contact resistance (or voltage drop) except low level (see table VI).

3.34 Intermediate current (applicable to high level relays only)(see 6.2.3). When relays are tested as specified in 4.8.30, during cycling, unless otherwise specified, the dynamic contact resistance of a closed contact shall not exceed the applicable value specified in table V and the voltage across an open contact shall be 95 percent or more of applied load voltage. After cycling, the closed static contact resistance shall not exceed the limits specified in table VI.

3.35 Resistance to solvents. When relays are tested as specified in 4.8.31, the mraking shall remain legible.

3.36 Marking (see 3.1, 6.2.2 and 6.2.3). Relays shall be marked in accordance with MIL-STD-1285, with the following information

a. Military part number (category I only) (see 1.2.5).
b. Rated coil voltage (or current) (see 3.5.6 and 3.1) and when applicable, operating frequency.
c. Coil resistance (see 3.5.6 and 3.12.1).
d. Coil inductance when specified (see 3.12.4).
e. Contact rating (the highest dc resistive load rating shall be marked when plural loads are specified (see 3.5.5 and 3.1).
f. Circuit diagram (see 3.5.7).
g. Terminals (see 3.5.9).
h. Source and date codes in accordance with MIL-STD-1285.

3.37 Workmanship. The relays shall be fabricated in such a manner as to be uniform in quality, and shall be free from cracked or displaced parts, sharp edges, burrs, and other defects that will affect life, serviceability, and appearance

4. QUALITY ASSURANCE PROVISIONS

4.1 Responsibility for inspection Unless otherwise specified in the contract or purchase order, the contractor is responsible for the performance of all inspection requirements as specified herein. Except as otherwise specified in the contract or order, the contractor may use his own or any other facilities suitable for the performance of the inspection requirements specified herein, unless disapproved by the Government. The Government reserves the right to perform any of the inspections set forth in the specification where such inspections are deemed necessary to assure supplies and services conform to prescribed requirements.

4.1.1 Test equipment and inspection facilities. The contractor shall establish and maintain a calibration system in accordance with MIL-STD-45662.

4.2 Classification of inspections. The inspections specified herein are classified as follows

a. Materials inspection (see 4.3).
b. Qualification inspection (see 4.5)
c. Inspection of categories II and III relays (see 4.6).
d. Quality conformance inspection (see 4.7).

4.3 Materials inspection. Materials inspection shall consist of certification supported by verifying data that the materials listed in table VII, used in fabricating the relays, are in accordance with the applicable referenced specifications prior to such fabrication.

Source: https://assist.dla.mil -- Downloaded: 2016-11-13T03:20Z
Check the source to verify that this is the current version before use.

TABLE VII. Materials inspection.

Material	Requirement paragraph	Applicable specification
Plastic - - - - - -	3.4.2.1	MIL-P-997, MIL-P-15037, MIL-P-15047, MIL-M-14, MIL-P-46133
Ceramic - - - - - -	3.4.2.2	MIL-I-10
Magnet wire - - - -	3.4.1.2	J-W-1177
Rubber- - - - - - -	3.4.2.3	ZZ-R-765

4 4 Inspection conditions. Unless otherwise specified herein, all inspections shall be performed in accordance with the test conditions specified in the GENERAL REQUIREMENTS of MIL-STD-202.

4 4.1 Power supply. Unless otherwise specified herein, the power supply shall have no more than 10 percent regulation at 110 percent of the specified test load current A dc power supply shall have no more than 5 percent voltage ripple. An ac power supply shall be within 1 percent of the specified frequency and shall be sinusoidal with a form factor between 0.95 and 1.25.

4 4.2 Grounding. Unless otherwise specified (see 3 1 and 6 2 3), the negative side of the dc power supply shall be grounded, one side of single-phase ac power supply shall be grounded, or the neutral of 3-phase ac power supply shall be grounded, as applicable.

4.4.3 Load conditions during tests. The coil(s) of the relay being tested shall be connected to the grounded side of their power supply, the loads of the relay being tested shall be connected to the grounded side of their power supply, and each stationary contact shall be connected to an individual load. All tests during which the contacts are loaded and being cycled, except dielectric withstanding voltage, shall be conducted with the case of the relay connected to the power supply ground or neutral through a normal blow fuse rated at 5 percent of the contact load, maximum, but not less than 0.100 ampere. For relays with nongrounded case ratings, tests for isolated-case ratings may be made with the case electrically isolated from the power supply ground

4 4 4 Testing devices Devices used in the testing of low level relays shall not load the contacts above 10 mA resistive at 6 Vdc or peak AC maximum open circuit unless otherwise specified herein High level contacts shall not be loaded above their lowest rating.

4.4.5 Mounting relays for ambient temperature tests When relays are subjected to the tests specified in 4.8.18 and 4 8 22 (intermediate current and coil life, respectively), they may be mounted on a heat sink in accordance with the following

a. Each relay may be attached by its normal mounting means to a 1/16 inch thick, minimum flat aluminum plate heat sink. The heat sink shall be designed to place every relay in the center of its own square space whose total surface area (both sides) is eight times the outside surface area of ther relay, excluding mounting. Relays without mounts shall be held to the heat sink with a metal strap 1/4 inch wide by 0.015 inch maximum thickness. The heat sink assembly shall be suspended by twine or other nonheat conducting material in a plane parallel to the normal air flow in the oven The leads shall not constitute a heat sink.
b Chamber temperature shall be controlled to maintain the temperature at the specified ambient extremes (see 3.1).

4.4.6 Methods of examination and test. Application of coil power to relays under test shall be such that plus polarity is applied to the color coded terminal when applicable, or to the lower numbered terminal when color coding is not used. Testing of dual-coil relays shall be repeated with each coil serving as the operating coil, and testing of latching relays shall be repeated with the relay in each operated position. When applicable, testing of relays with plug-in termination shall be performed with the appropriate or specified socket or connector mated to the relay

4.5 Qualification inspection (category I relays only, see 3.2.1). Qualification inspection shall be performed at a laboratory acceptable to the Government (see 6.3) on sample units produced with equipment and procedures normally used in production.

Source: https://assist.dla.mil -- Downloaded: 2016-11-13T03:20Z
Check the source to verify that this is the current version before use.

4.5.1 Sample size. The number of relays to be subjected to qualification inspection shall be as specified in table VIII.

4.5.2 Inspection routine. The sample shall be subjected to the inspections specified in the table VIII, in the order shown. With the exception of the one unsealed sample unit which is to be examined internally, all sample units shall be subjected to the inspections of group I. The sample shall then be divided as specified in table VIII for groups II though IV (as applicable), and subjected to the inspections for their particular groups.

4 5.3 Failures. Failures in excess of those allowed in table VIII shall be cause for refusal to grant qualification approval.

TABLE VIII. Qualification inspection.

Inspection	Requirement	Test method paragraph	Number of sample units for inspection	Number of defectives permitted
Group I				
Visual and mechanical inspection				
Internal 1/ - - - - - - - - - -	3.1,3.4,3.5, and 3.37	4.8 1		
External - - - - - - - - - - - -	3.1,3.4,3.5, 3.36 and 3.37	4 8.1		
Internal moisture (when specified)	3.6	4.8.2		
Run-in (when specified)- - - - -	3.7	4.8 3		
Solderability (applicable to solder terminals)(3 sample units) - -	3.8	4.8 4		
Seal - - - - - - - - - - - - - - -	3.9	4.8.5	All sample units	0
Insulation resistance- - - - - -	3.10	4.8.6		
Dielectric withstanding voltage-	3.11	4.8.7		
Electrical characteristics				
Static contact resistance (or voltage drop)- - - - - -	3.12.1	4.8.8.1		
Pickup, hold, and dropout voltage- - - - - - - - - - - -	3.12.2	4 8.8.2		
DC coil resistance - - - - - - -	3.12.3	4 8.8.3		
Coil inductance (when specified) (1 sample unit) 1/- - - - -	3.12.4	4.8.8.4		
Operate and release time - - -	3.12 5	4.8.8.5		
Contact bounce - - - - - - - - -	3.12.6	4.8 8.6		
Group II				
Thermal shock and high and low temperature operation- - - - - -	3 13	4.8.9		
Resistance to solvents - - - - - -	3.35	4.8.31		
Shock- - - - - - - - - - - - - - -	3.14	4.8.10		
Vibration- - - - - - - - - - - - -	3 15	4.8.11		
Acceleration (when specified)- - -	3.16	4.8.12		
Terminal strength- - - - - - - - -	3.17	4.8.13		
Moisture resistance(except encl 4)- - - - - - - - - - - -	3.18	4.8.14		
Seal (encl 4 only) - - - - - - - -	3 9.2	4.8.5.2		
Insulation resistance- - - - - - -	3.10	4.8.6	4	
Dielectric withstanding voltage- -	3 11	4.8.7		
Electrical characteristics				
Static contact resistance (or voltage drop)- - - - - - -	3.12.1	4.8.8.1		
Pickup, hold, and dropout voltage- - - - - - - - - - - -	3.12.2	4.8.8.2		
DC coil resistance - - - - - - -	3.12.3	4.8.8.3		
Operate and release time - - - -	3 12.5	4.8.8.5		
Contact bounce - - - - - - - - -	3 12.6	4.8.8.6		
Visual and mechanical inspection -	3..1,3.4,3.5, 3.36 and 3.37	4.8.1		

Source: https://assist.dla.mil -- Downloaded: 2016-11-13T03:20Z
Check the source to verify that this is the current version before use.

TABLE VIII Qualification inspection - Continued.

Inspection	Requirement	Test method paragraph	Number of sample units for inspection	Number of defectives permitted
Group III				
Magnetic interference (when specified)	3.19	4.8.15	4	1
Acoustical noise (when specified)	3.20	4.8.16		
Sand and dust (encl 3 only)	3.21	4.8.17		
Contact sticking (when specified)	3.22	4.8.18		
Coil life (except intermittent duty relays)	3.23	4.8.19		
Resistance to soldering heat (when specified)	3.24	4.8.20		
Salt spray (corrosion)	3 25	4.8.21		
Moisture resistance (except encl 4)	3.18	4.8.14		
Seal (encl 4 only)	3.9.2	4 8.5 2		
Insulation resistance	3 10	4.8 6		
Dielectric withstanding voltage	3.11	4 8.7		
Electrical characteristics				
Static contact resistance (or voltage drop)	3.12.1	4 8.8 1		
Pickup, hold, and dropout voltage	3.12 2	4.8.8 2		
DC coil resistance	3.12.3	4.8 8.3		
Operate and release time	3 12 5	4 8 8 5		
Contact bounce	3.12.6	4.8.8 6		
Visual and mechanical inspection	3 1, 3 4,3 5, 3 36 and 3.37	4.8 1		
Group IV				
Contact operating differential (when specified)	3 26	4.8.22	4 relays, minimum. For relays with more than 2 contact ratings, 2 relays per contact rating shall be tested.	0
Contact noise (when specified)	3.27	4.8.23		
Cross-talk (dry reed relays only and others when specified)	3.28	4 8.24		
Capacitance (when specified)	3 29	4.8.25		
Thermal EMF (when specified)	3 30	4 8.26		
Overload (not applicable to low level relays)	3 31	4.8 27		
Load transfer, 3 phase ac (when specified)	3 32	4.8.28		
Life	3 33	4.8.29		
Terminal strength 2/	3.17	4.8 13		
Seal	3 9	4.8.5		
Insulation resistance	3 10	4.8.6		
Dielectric withstanding voltage	3 11	4 8 7		
Electrical characteristics.				
Static contact resistance (or voltage drop)	3.12.1	4.8 8.1		
Pickup, hold, and dropout voltage	3.12.2	4.8 8.2		
DC coil resistance	3.12.3	4.8.8.3		
Operate and release time	3.12.5	4.8.8.5		
Contact bounce	3.12.6	4 8.8.6		
Visual and mechanical inspection	3.1,3 4,3.5, 3.36 and 3.37	4.8.1		

Source: https://assist.dla.mil -- Downloaded: 2016-11-13T03:20Z
Check the source to verify that this is the current version before use.

TABLE VIII. Qualification inspection - Continued.

Inspection	Requirement	Test method paragraph	Number of sample units for inspection	Number of defectives permitted
Group V				
Intermediate current- - - - - - - -	3.34	4.8.30		
Insulation resistance - - - - - - - -	3.10	4.8 6		
Dielectric withstanding voltage - -	3.11	4.8.7		
Electrical characteristics:				
Static contact resistance (or voltage drop) - - - - - - - -	3.12.1	4.8.8.1	4	0
Pickup, hold, and dropout voltage - - - - - - - - - - - - - -	3.12.2	4.8.8.2		
DC coil resistance- - - - - - - -	3.12.3	4.8.8 3		
Operate and release time- - - - -	3.12 5	4.8 8.5		
Contact bounce- - - - - - - - - -	3.12.6	4.8.8.6		
Visual and mechanical inspection- -	3.1,3.4,3.5, 3.36 and 3.37	4.8.1		

1/ One unsealed sample unit shall be subjected to the internal inspection, and, when applicable, this same unsealed sample unit shall be subjected to the coil inductance test.

2/ Test four sample relays which have been subjected to the highest current loads.

4.5.4 Retention of qualification. To retain qualification, the contractor shall forward to the qualifying activity at 12-month intervals a summary of groups A and B. At 36-month intervals a group C report shall be submitted. The qualifying activity shall establish the initial reporting date. The report shall consist of

a. A summary of the results of the tests performed for inspection of product for delivery, groups A and B, indicating as a minimum the nmber of lots that have passed and the number that have failed. The results of tests of all reworked lots shall be identified and accounted for.

b. The results of tests performed for periodic inspection, group C, including the number and mode of failures The test report shall include results of all periodic inspection tests performed and completed during the 36-month period. If the test results indicate nonconformance with specification requirements, and corrective action acceptable to the qualifying activity has not been taken, action may be taken to remove the failing product from the qualified products list.

Failure to submit the report within 60 days after the end of each 36-month period may result in loss of qualification for the product. In addition to the periodic submission of inspection data, the contractor shall immediately notify the qualifying activity at any time during the 36-month period that the inspection data indicates failure of the qualified product to meet the requirements of this specification (see 4.7.2.2)

In the event that no production occurred during the reporting period, a report shall be submitted certifying that the company still has the capabilities and facilities necessary to produce the item If during two consecutive reporting periods there has been no production, the manufacturer may be required, at the discretion of the qualifying activity, to submit a representative product of each part number to testing in accordance with the qualification inspection requirements.

4.6 Inspection of categories II and III relays (items not covered by specification sheets). Inspection requirements for items not covered by specification sheets shall be performed by the contractor, after award of contract, and prior to production (see 6.2.2 and 6.2.3).

Source: https://assist.dla.mil -- Downloaded: 2016-11-13T03:20Z
Check the source to verify that this is the current version before use.

4.6.1 Category II relays. Additional tests to verify suitability of the variations from category I relays shall be as specified (see 6.2.2).

4.6.2 Category III relays. Unless otherwise specified (see 6.2.3), the inspection requirements shall be as specified in 4.5 through 4.5.2 inclusive.

4.7 Quality conformance inspection.

4.7.1 Inspection of product for delivery. Inspection of product for delivery shall consist of group A inspection. Except as specified in 4.7.2.2.3, delivery of products which have passed group A inspection shall not be delayed pending the results of the groups B and C inspections.

4.7.1.1 Inspection lot. An inspection lot, as far as practicable, shall consist of all relays of the same enclosure, configuration, vibration characteristic, temperature class, shock type, and terminal type, produced under essentially the same conditions within a period not to exceed 4 weeks, and offered for inspection at one time.

4 7.1.2 Group A inspection. Group A inspection shall consist of the inspections specified in table IX. If the manufacturer performs an equal or more stringent inspection than required for subgroup 1 as the final step of his production process, the subgroup 1 inspection, if applicable, may be waived. The results of group A inspection shall be recorded on the attributes basis. A summary of group A tests, indicating the number of lots which have passed and the number which have failed, shall be submitted to the qualifying activity at 12-month intervals.

4.7.1.2.1 Sampling plan. The inspections in subgroups 2 and 3 shall be performed on each relay offered for inspection except as noted For subgroup 1, sampling shall be as specified in table IX. The inspection of internal moisture (when specified) shall be performed on each inspection lot by statistical sampling and inspection in accordance with MIL-STD-105 for normal inspection. The degree of sampling (normal or tightened) shall be determined independently for each lot as applicable.

4.7.2 Periodic inspection. Periodic inspection shall consist of groups B and C inspection.

4.7.2 1 Group B inspection. Group B inspection shall consist of the inspections specified in table X, and shall be performed in the order shown. A summary of group B tests indicating the number of lots accepted and the number rejected shall be submitted to the qualifying activity at 12-month intervals.

4.7.2.1.1 Sampling plan. Four sample units shall be selected every 3 months from inspection lots which have passed group A inspection. No failures shall be allowed.

4.7.2.1.2 Disposition of sample units. Sample units which have been subjected to group B inspection shall not be delivered on any contract or purchase order.

4.7 2.2 Group C inspection. Group C inspection shall consist of the inspections specified in table VIII, in the order shown. Group C inspection shall be made on sample units selected from inspection lots which have passed the group A inspection.

Source: https://assist.dla.mil -- Downloaded: 2016-11-13T03:20Z
Check the source to verify that this is the current version before use.

TABLE IX Group A inspection

Inspection	Requirement paragraph	Test method paragraph	
Subgroup 1			
Internal moisture (when specified) - -	3.6	4.8 2	AQL percent defective Major 4.0
Run-in (when specified)- - - - - - - -	3.7	4 8 3	100% inspection Discard all failed relays
Subgroup 2 1/			
Insulation resistance- - - - - - - - -	3.10	4 8 6	
Dielectric withstanding voltage- - - -	3.11	4.8 7	
Electrical characteristics			
Static contact resistance (or voltage drop)- - - - - - - - -	3 12.1	4.8.8 1	100% inspection Discard all failed relays
Pickup, hold, and dropout voltage- -	3.12 2	4 8 8 2	
DC coil resistance - - - - - - - - -	3 12 3	4 8.8.3	
Operate and release time - - - - - -	3 12.5	4.8.8 5	
Contact bounce - - - - - - - - - - -	3 12.6	4.8.8 6	
Subgroup 3			
Solderability- - - - - - - - - - - - - -	3 8	4 8.4	2/
Seal - - - - - - - - - - - - - - - - - -	3 9	4 8 5	100% inspection 3/
Visual and mechanical inspection (external) 4/- - - - - - - - - - - -	3 1,3.4,3 5, 3 36 and 3 37	4 8 1	100% inspection Discard all failed relays 5/

1/ Inspection sequence optional
2/ Solderability shall be required on two sample relays drawn at random from each formed lot In the event of a failure, the entire lot shall be reworked and a second random sample taken When rework requires the replating of the relay, the entire lot shall be resubmitted for all group A inspection, after passing solderability If the rework requires only the solder dipping of the terminals, then the entire lot shall be resubmitted for subgroup 2 and 3 testing, after passing solderability
3/ Seal failures may be reworked and resubmitted for all group A inspection
4/ Physical dimensions and weight shall be measured on two sample units per lot
5/ Minor defects such as marking may be reworked

TABLE X Group B inspection

Inspection	Requirement paragraph	Test method paragraph
Vibration 1/- -	3 15	4 8 11
Intermediate current (when applicable) 2/ - - - -	3 34	4 8 30
Insulation resistance - - - - - - - - - - - - - - -	3 10	4 8 6
Dielectric withstanding voltage - - - - - - - - -	3 11	4 8 7
Electrical characteristics		
Static contact resistance (or voltage drop) - -	3 12 1	4 8 8 1
Pickup, hold, and dropout voltage - - - - - - -	3 12 2	4.8 8.2
DC coil resistance- - - - - - - - - - - - - - - -	3 12.3	4.8 8 3
Operate and release time- - - - - - - - - - - - -	3.12 5	4 8.8 5
Contact bounce- - - - - - - - - - - - - - - - - -	3.12 6	4 8 8 6
Terminal strength - - - - - - - - - - - - - - - - -	3.17	4 8 13
Moisture resistance (all encl except 4) - - - - -	3 18	4 8.14
Seal (encl 4 only)- - - - - - - - - - - - - - - - -	3.9	4 8 5
Visual and mechanical inspection- - - - - - - - -	3 1,3 4,3 5, 3 36 and 3.37	4 8 1

1/ In traversing the frequency range, duration of test shall be reduced to 5 minutes instead of 1 hour for 4 8 11 1 and one cycle instead of 12 cycles for 4 8 11.2, 4 8.11 3, 4 8 11 4, and 4 8.11 5
2/ When intermediate current is not applicable, low level testing, as specified, shall be performed in accordance with life test 3 33, using procedure 4 8 29 5 only, otherwise, use procedure 4.8 29 1 only for maximum rated resistive current

Source: https://assist.dla.mil -- Downloaded: 2016-11-13T03:20Z
Check the source to verify that this is the current version before use.

4.7.2.2.1 Sampling plan. Every 36 months, the number of sample units specified in 4.5.1, shall be subjected to the inspections of table VIII, and shall be performed in the order shown. The number of failures allowed shall be as specified in table VIII.

4.7.2.2.2 Disposition of sample units. Sample units which have been subjected to group C inspection shall not be delivered on the contract or purchase order.

4.7.2.2.3 Noncompliance. If a sample fails to pass the group B or C inspection, the manufacturer shall notify the qualifying activity and the cognizant inspection activity of such failure and take corrective action on the materials or processes, or both, as warranted, and on all units of product which can be corrected and which were manufactured under essentially the same materials and processes, and which are considered subject to the same failure. Accepance and shipment of the product shall be discontinued until corrective action, acceptable to the qualifying activity has been taken. After the corrective action has been taken, group C inspection shall be repeated on additional sample units (all inspection, or the inspection which the original sample failed, at the option of the qualifying activity). Groups A and B inspection may be reinstituted, however, final acceptance and shipment shall be withheld until the group C inspection has shown that the corrective action was successful In the event of failure after reinspection, information concerning the failure shall be furnished to the cognizant inspection activity and the qualifying activity.

4.7.3 Inspection of packaging. Except when commercial packaging is specified, the sampling and inspection of the preservation and interior package marking shall be in accordance with the group A and B quality conformance inspection requirements of MIL-P-116. The sampling and inspection of the packing and marking for shipment and storage shall be in accordance with the quality assurance provisions of the applicable container specification and the marking requirements of MIL-STD-129. The inspection of commercial packaging shall be as specified in the contract (see 6.2).

4 8 Methods of inspection.

4.8.1 Visual and mechanical. Relays shall be examined to verify that the materials, external design and construction, physical dimensions, marking, and workmanship are in accordance with the applicable requirements (sees 3.1, 3.4, 3 5, 3.36 and 3 37).

4.8.2 Internal moisture (when specified, see 3.1 and 6.2.3) Relays (coils de-energized) shall be held at 15° to 25°C for a minimum of 6 hours. The insulation resistance of all contact pins to case only, shall be measured and observed. The relay coil shall be energized with 140 percent of rated voltage for a period of 2-1/2 minutes THe insultaion resistance of all contact pins to case only shall be verified a minimum of once each 30 seconds during this period and the lowest value shall meet the requirements of 3.6.

4 8.3 Run-in (when specified, see 3.1 and 6.2.3)(see 3.7). Relays shall be subjected to 5,000 operations The operation rate shall be a maximum of .1/maximum operate time (seconds) plus maximum release time (seconds) operations per second where the operate and release times are those of the relay under test. The following conditions shall apply

a The coil shall be energized at rated voltage (see 3.1 and 6.2.30.
b Each pair of mated contacts shall be monitored for dynamic contact resistance.
c. The load conditions shall be at low level unless otherwise specified.

Source: https://assist.dla.mil -- Downloaded: 2016-11-13T03:20Z
Check the source to verify that this is the current version before use.

4.8.4 Solderability (applicable to solder terminals) (see 3.8). Relays shall be tested in accordanca with method 208 of MIL-STD-202 The following detail and exception shall apply

a. Number of terminations of each part to be tested - All.
b The temperature of the molten solder shall be a uniform 260° ±5°C (500° ±9°F).

4.8.5 Seal (see 3.9)

4.8.5.1 Test I (enclosure 3 relays only). Relays shall be tested in accordance with method 112 of MIL-STD-202. The following details shall apply

a. Test condition letter - A (for temperature characteristic B) or B (for temperature characteristic A).
b. Measurements after test - Not applicable.

4.8.5.2 Test II (enclosure 4 relays only). Relays shall be tested in accordance with 4.8.5.2.1 or 4.8.5.2.2 as applicable.

4 8 5 2 1 Relays sealed with a tracer gas. Relays sealed with a tracer gas shall be tested in accordance with method 112 of MIL-STD-202, or at the option of the manufacturer, method 1014 of MIL-STD-883 The following details shall apply.

a Mehtod 112 of MIL-STD-202.

(1) Test condition C, procedure IV Relays shall be back-filled with a helium tracer gas (90 percent dry gas and 10 percent helium). Silicone oil shall not be used
(2) Leakage rate sensitivity - 1×10^{-8} atm cm^3/s.
(3) Measurements after test - Not applicable.

b. Method 1014 of MIL-STD-883, test condition B.

4.8 5.2.2 Relays sealed without a tracer gas. Relays sealed without a tracer gas shall be tested in accordance with method 1014 of MIL-STD-883. At the option of the manufacturer, either "a" or "b" may be used. The following details shall apply

a. Method 1014 of MIL-STD-883

(1) Test condition A_1 or A_2.
(2) Measurements after test - Perform a gross leak test per method 112 of MIL-STD-202, test condition A, B, or D. Silicone oil shall not be used. At the option of the manufacturer, the gross leak test of method 1014 of MIL-STD-883, test condition C may be used.

b. Method 1014 of MIL-STD-883, test condition B.

4.8 6 Insulation resistance (see 3.10) Relays shall be tested in accordance with method 302 of MIL-STD-202 with the relay in the energized and de-energized positions. The following details shall apply

a. Test-condition letter - A or B (for relays with coil and contact ratings below 60 volts), and B (for all other relays).
b. Points of measurement - As specified in points of application in table XI.

4.8.7 Dielectric withstanding voltage (see 3.11). Relays shall be tested as specified in 4.8.7.1, and when specified (see 3.1 and 6.2.3), in accordance with 4.8.7.2. Testing in accordance 4.8.7.2 is not required for group A testing.

4.8.7.1 At atmospheric pressure. Relays shall be tested in accordance with method 301 of MIL-STD-202. The following details shall apply

a. Points of application and magnitude of test voltage - As shown in table XI.
b. Maximum leakage current -1.0 mA.
c. Duration of application - 60 seconds for qualification and group B and C tests, 5 seconds for group A tests.

Source: https://assist.dla.mil -- Downloaded: 2016-11-13T03:20Z
Check the source to verify that this is the current version before use.

TABLE XI. Test details for dielectric withstanding voltage.

Points of application	Test voltage
Between case, frame, or enclosure, and between open contacts in the energized and de-energized position- - -	1,000 volts ac plus twice rated voltage or as specified (see 3 1)
Between case, frame, or enclosure and coil(s)- - - - - -	
Between all contacts and coil(s) - - - - - - - - - - - - -	
Between open contacts in the energized and de-energized position- - - - - - - - - - - - - - - - - - -	
Between coils of dual-coil relays- - - - - - - - - - - - -	
Between contact poles- - - - - - - - - - - - - - - - - - -	

4.8.7.2 At reduced barometric pressure. Relays specified for operation above 10,000 feet shall be tested in accordance with method 105 of MIL-STD-202. The following details shall apply

a. Method of mounting - Normal mounting means.
b. Test-condition letter - C (unless otherwise specified, see 3.1 and 6.2.3).
c. Tests during subjection to reduced pressure - As specified in 4.8.7.1, except test voltage shall be 350 volts.

Following these tests, relays shall be examined for evidence of arcing, flashover, insulation breakdown, and damage.

4.8.8 Electrical characteristics.

4.8.8.1 Static contact resistance (or voltage drop)(see 3.12.1). Relays shall be tested in accordance with method 307 of MIL-STD-202 The following details and exception shall apply

a Method of connection - Between the measuring apparatus and the relay terminals (for relays with wire-lead terminals, this measurement shall be made 1/2 ± 3/32 inch from the emergence of the lead from the relay). Voltage-sensing leads shall be connected in such a way so as to exclude the resistance of the current-carrying leads.
b Test current - As specified in table VI.
c. Maximum open-circuit test voltage - As specified in table VI.
d Points of measurements - All contacts in their closed position, the coil shall be energized with rated voltage (or current) if necessary to effect contact closure.
e. Number of actuations prior to measurement - None.
f. Number of test actuations - Three (no contact voltage shall be applied during contact transfer). For quality conformance inspection, one test actuation shall be made.
g. Number of measurements per actuation - One in each closed contact position.

4 8.8.2 Pickup, hold, and dropout voltage)(see 3.1.2.2). Pickup, hold, and dropout voltage shall be measured as specified in 4.8.8.2.1, 4.8.8.2.2, 4.8.8.2.3, or 4.8.8.2.4). For qualification inspection, the relay shall be mounted in each of three mutually perpendicular planes, unless otherwise specified (see 3.1). For quality conformance inspection, the relay mounting position is optional. A suitable indicating device shall be used to monitor contact position. During the test, all contacts shall not change state (break or remake) when the coil is energized above the pull-in voltage, when the coil voltage is lowered to any value above the specified hold (maximum dropout) voltage, or when the coil voltage is reduced from (minimum) dropout voltage to zero.

Source: https://assist.dla.mil -- Downloaded: 2016-11-13T03:20Z
Check the source to verify that this is the current version before use.

4.8 8 2.1 Pickup voltage (not applicable to latching relays). Rated voltage shall be applied to the coil for a period of 1 to 3 seconds, then reduced to zero. The voltage shall then be gradually increased until the relay operates, and the pickup voltage shall be measured For group A inspection, it is permissible to perform pickup and dropout voltage using step function voltage changes as follows and as illustrated in figure 2

a Apply rated coil voltage.
b Stepdown to hold voltage, normally open contacts must still be making
c Stepdown to dropout voltage, all contacts should have transferred and all normally closed contacts should be making
d Stepdown to zero voltage
e Stepup to the maximum pickup voltage, contacts should have transferred and all normally open contacts should be made.

4.8.8.2.2 Pickup (operate) voltage (applicable to latching relays only). Before measuring the pickup voltage, establish that all contacts are in their last energized mode for dual coil relays or in the plus (+) contrasting color bead mode for single coil relays (see 3 1). If not, apply rated voltage to establish last energized contact position. Gradually increase the voltage to the latching coil or in the latching direction for single coil relays until the contacts transfer and the latch (operate) voltage measured. Apply rated latching voltage and reduce to zero. Gradually increase the voltage to the reset coil or in the reset direction for single coil relay until the contacts transfer and the reset (operate) voltage measured For group A inspection, it is permissible to perform this operate voltage measurement using step function voltage changes illustrated in figure 2.

4.8 8 2.3 Hold voltage Rated voltage shall be applied to the coil The voltage shall then be reduced to the specified hold voltage (see 3 1). All contacts shall not change state. For group A inspection, it is permissible to perform this test using the step function voltage program described in 4 8.7 2 1 and figure 2.

4.8 8.2 4 Dropout voltage (not applicable to latching relays) Rated voltage shall be applied to the coil The voltage shall then be gradually reduced until all contacts return to the de-energized position and the dropout voltage shall be measured. For group A inspection, it is permissible to perform this test using the step function voltage program described in 4 8 7 2 1 and figure 2.

4 8 8 3 DC coil resistance (see 3 12.3). Relays shall be tested in accordance with method 303 of MIL-STD-202

4.8 8.4 Coil inductance (when specified, see 3 1 and 6 2 3) (see 3 12.4) Coil inductance shall be measured at 1,000 Hz, using a conventional impedance bridge. The relay armature shall be held in the operated position(s)

4 8.8.5 Operate and release time (see 3 12 5) Operate and release time shall be measured using an oscilloscope or other acceptable means approved by the qualifying activity. Rated voltage shall be applied to the coil Contact load conditions shall be as required in 4 8 8.6. The circuit shown on figure 3, or equivalent, shall be used The operate and release time shall be exclusive of contact bounce Timing measurements shall be made on all contact sets, electronic instrumentation or other suitable means may be used for group A inspection.

4.8.8 6 Contact bounce (see 3.12 6). Contact bounce shall be measured on each contact set using an oscilloscope or other acceptable means approved by the qualifying activity. The trace shall show contact switching at operate and release and appropriate timing markers Rated voltage shall be applied to the coil Low level contacts shall be loaded with 6 volts dc maximum or peak ac at 10 mA maximum High level contacts shall be loaded at 100 mA at 28 Vdc. After high level rated load life and intermediate current tests, contact bounce shall be measured at 100 mA at 28 Vdc. A contact bounce shall be considered any occurence equal to or greater than 90 percent of the open circuit voltage with a pulse width of 10 microseconds or greater. The circuit shown on figure 3, or equivalent, shall be used

Source: https://assist.dla.mil -- Downloaded: 2016-11-13T03:20Z
Check the source to verify that this is the current version before use.

PICKUP, HOLD & DROPOUT

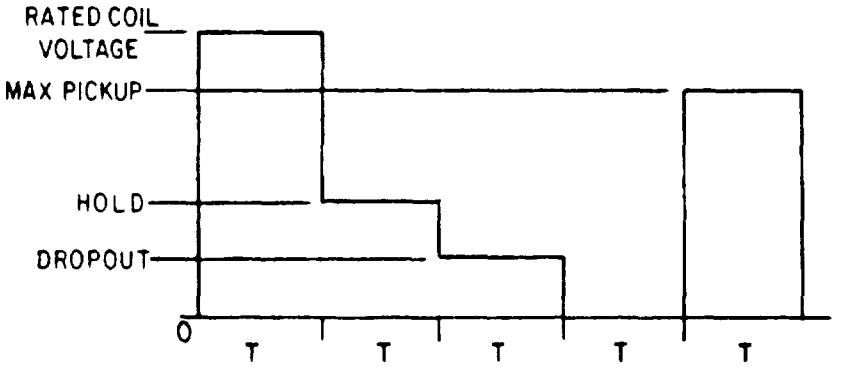

LATCHING RELAYS

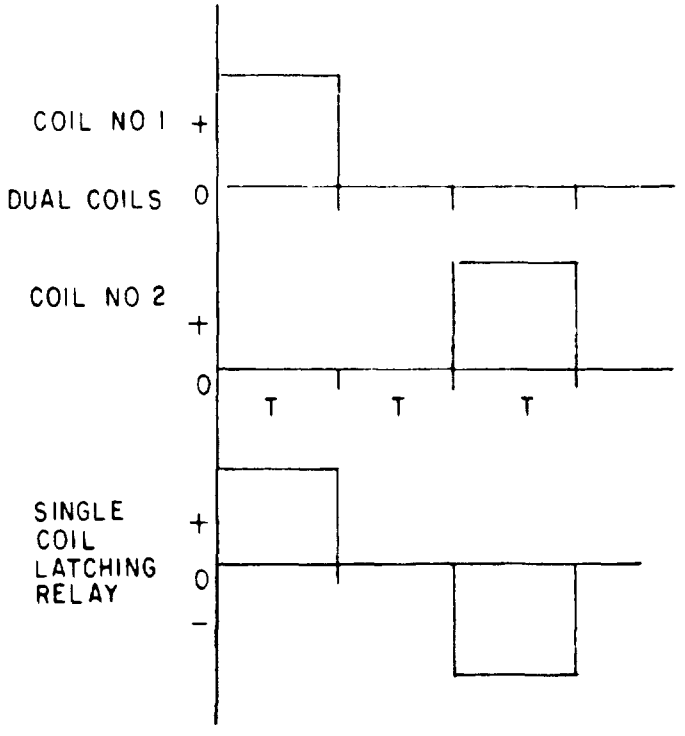

FIGURE 2 Optional pickup, hold, and dropout sequencing for group A inspection

Source: https://assist.dla.mil -- Downloaded: 2016-11-13T03:20Z
Check the source to verify that this is the current version before use.

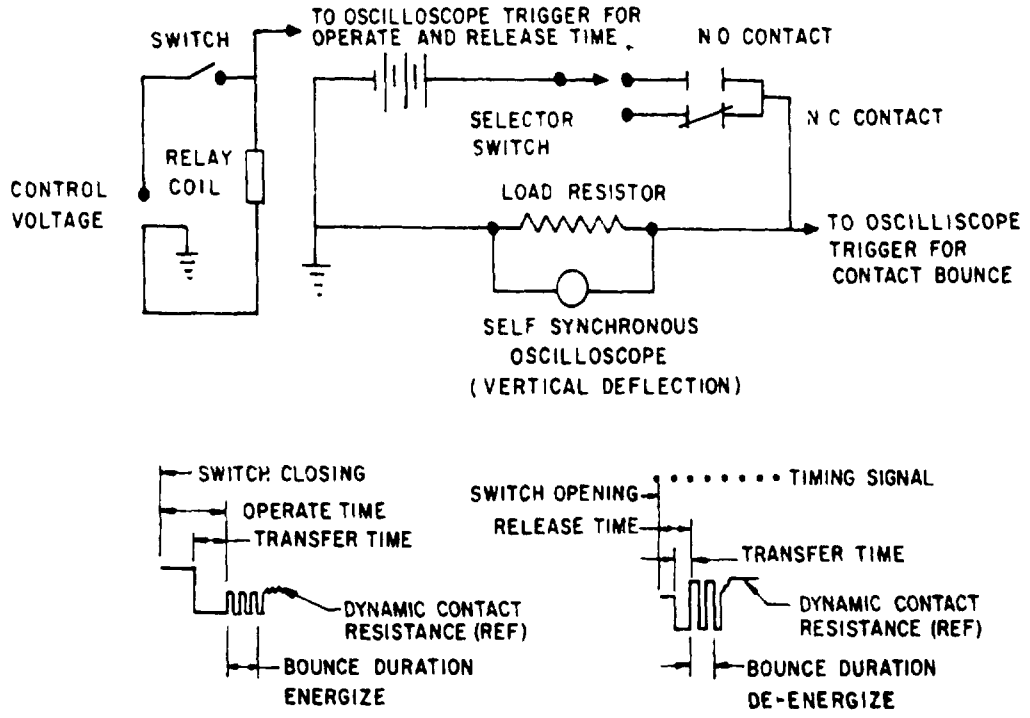

NOTE The horizontal scan rate of the oscilloscope shall show the required pertinent data

FIGURE 3 Typical circuit for operate and release time and contact bounce with typical traces

4.8.9 Thermal shock and high and low temperature operation (see 3.13). Relays shall be tested in accordance with method 107 of MIL-STD-202. The following details and exception shall apply

a. Special mounting - relays shall be suspended in the test chamber by twine, or other nonheat-conducting material, in a plane parallel to the normal air flow. Test leads may be used for mounting, however, they shall not provide a heat sink.
b. Test-condition letter A, B, or C, as applicable (see table III), except exposure time at temperature extreme during the fifth cycle, shall be for 2 hours each.
c. Measurements at each temperature extreme during steps 1 and 3 of the fifth cycle at the end of each temperature exposure, and with the relays still in the conditioning chamber, the insulation resistance, pickup and dropout voltage (or current) and operate and release time, shall be measured as specified in 4.8.6, 4.8.8.2, and 4.8.8.5, respectively. Pickup and dropout voltage or current shall be measured in only one plane.
d. Measurements after test - Relays shall be visually examined for cracking, peeling, and flaking of the finish.

4.8.10 Shock (see 3.14). Relays shall be tested as specified in 4.8.10.1 through 4.8.10.2, as applicable (see table IV).

Source: https://assist.dla.mil -- Downloaded: 2016-11-13T03:20Z
Check the source to verify that this is the current version before use.

4.8.10.1 Types 1, 2, and 3. Relays shall be tested in accordance with method 213 of MIL-STD-202. The following details and exceptions shall apply

a. Mounting method - As specified in 4.8.11.1b.
b Test-condition letters - A, B, or C, as applicable (see table IV).
c. Electrical-load conditions - In each direction of shock, the coil shall be de-energized during two shocks and energized with rated voltage (or current) during one shock.
d. Measurements during test - As specified in 4 8.11 1d
e. Examination after test - As specified in 4.8.11.1e.

4.8.10.2 Type 5. Relays shall be tested in accordance with method 207 of MIL-STD-202. The following details and exceptions shall apply

a. Mounting method - As specified in 4.8.11.1b
b Electrical-load conditions - In each direction of shock, the coil shall be de-energized during one shock and energized with rated voltage (or current) during one shock.
c Measurements during test - As specified in 4.8 11.1d, except test-condition letter E.
d. Examination after test - As specified in 4.8 11.1e.

4.8.11 Vibration (see 3.15). Relays shall be tested as specified in 4.8.11.1 through 4 8.11.6, as applicable (see table II) The test table shall be calibrated using a substitute mass having weight and dimensions equivalent to the relay to be tested, as follows (or equivalent)

a Three accelerometers shall be mounted in mutually perpendicular planes within two inches of the item under test. Isolators which might tend to alter the output of the accelerometer shall not be used
b For vibration characteristics 1 through 5, the output of the accelerometer which is monitoring vibration shall be connected to the input of an amplifier. The amplifier shall have a flat response within 5 percent from 10 to 10,000 Hz The output of the amplifier shall be connected to one input of an oscilloscope which is operating in the differential mode, and shall also be connected to the input of a tracking filter The tracking filter shall have a band pass of 25 Hz, or less, and a flat response within 5 percent over the applicable frequency range The output of the tracking filter shall be connected to the second input of the oscilloscope The peak of the trace shall not exceed 10 percent of the peak acceleration shown on table II, when compensating for phase shift.

NOTE For vibration characteristic 6, the random vibration level shall be determined by the use of a true rms meter

c Two accelerometers, used to measure side G's, shall be mounted on the fixture Their outputs shall be connected to the input of an amplifier The amplifier shall be connected to a voltmeter. The voltmeter and amplifier system shall have a flat response within 5 percent from 10 to 10,000 Hz The rms side motion of the measured output shall not exceed 30 percent of the rms value of the desired table motion.

Prior to test, one relay shall be mounted on the test table and pickup, hold, and dropout voltage (or current) shall be measured as specified in 4.8.8.2, with the table coil de-energized, the measurement shall then be repeated with the table coil energized. If the value measured with the table coil energized varies more than 5 percent from that obtained with the table coil de-energized, magnetic shielding shall be added so that the value measured with the table coil energized does not vary more than 5 percent from the value measured with the table coil de-energized.

4 8.11 1 Vibration 1 (0 060" D A., 10-55 Hz) Relays shall be tested in accordance with method 201 of MIL-STD-202. The following details and exception shall apply

a. Tests and measurements prior to vibration - None.
b. Method of mounting - Rigidly mounted by normal mounting means. (Relays designed without mounting provisions shall be rigidly secured to a suitable

Source: https://assist.dla.mil -- Downloaded: 2016-11-13T03:20Z
Check the source to verify that this is the current version before use.

nonmagnetic mounting plate by means of potting or adhesive applied between the top of the relay and the mounting plate. Connections to the relay shall be made by soldering stranded flexible wires to the relay terminals).

c. Electrical-load conditions - Relays shall be tested with the coil energized for 1 hour at rated voltage (or current), and with the coil de-energized for 1 hour, in each of the three mutually perpendicular directions (relays with intermittent duty coils shall not be energized above their duty cycle). Contacts shall be loaded as specified in d.
d. Measurements during test - Contacts shall be monitored as specified in method 310 of MIL-STD-202, test condition B, test-condition letter A (contacts may be wired together or individually).
e. Examination after test - Relays shall be examined for evidence of structual failure or other damage which might impair the operation of the relay

4.8.11.2 Vibration 2 (10G, 10-500 Hz). Relays shall be tested in accordance with method 204 of MIL-STD-202. The following details and exception shall apply:

a. Mounting of specimens - As specified in 4.8.11.1b.
b. Electrical-load conditions - As specified in 4.8.11.1c, except time durations shall be 1-1/2 hours.
c. Test-condition letter - A.
d. Measurements during test - As specified in 4.8.11.1d.
e. Examination after test - As specified in 4 8.11.1e.

4.8.11 3 Vibration 3 (15G, 10-2,000 Hz). Relays shall be tested in accordance with method 204 of MIL-STD-202. The following details and exception shall apply.

a. Mounting of specimens - As specified in 4.8.11.1b.
b. Electrical-load conditions - As specified in 4.8.11.1c, except time durations shall be 2 hours.
c. Test-condition letter - B.
d. Measurements during test - As specified in 4.8.11.1d.
e. Examination after test - As specified in 4.8.11.1e.

4.8.11.4 Vibration 4 (20G, 10-2,000 Hz). Relays shall be tested in accordance with method 204 of MIL-STD-202. The following details and exception shall apply

a. Mounting of specimens - As specified in 4.8.11.1b.
b. Electrical-load conditions - As specified in 4.8.11.1c, except time durations shall be 2 hours.
c. Test-condition letter - D.
d. Measurements during test - As specified in 4.8.11.1d.
e. Examination after test - As specified in 4.8.11.1e.

4.8.11.5 Vibration 5 (30G, 10 to 3,000 Hz). Relays shall be tested in accordance with method 204 of MIL-STD-202. The following details and exceptions shall apply.

a. Mounting of specimens - As specified in 4.8.11.1b.
b. Electrical-load conditions - As specified in 4.8.11.1c, except time durations shall be 2 hours.
c. Vibration level - 0.195 inch double amplitude or 30G, whichever is less
d. Measurements during test - As specified in 4.8.11.1d.
e. Examination after test - As specified in 4.8.11.1e.

4.8.11.6 Vibration 6 (random). Relays shall be tested in accordance with method 214 of MIL-STD-202. The following details and exceptions shall apply

a. Method of mounting - As specified in 4.8.11.1b.
b. Test-condition letter - As specified (see 3.1 and 6.2.3)
c. Duration of test - 15 minutes with coil energized at rated voltage (or current) and 15 minutes with coil de-energized in each of the three planes.
d. Measurements during test - As specified in 4.8.11.1d.
e. Examination after test - As specified in 4.8.11.1e.

Source: https://assist.dla.mil -- Downloaded: 2016-11-13T03:20Z
Check the source to verify that this is the current version before use.

4.8.12 Acceleration (when specified, see 3.1 and 6.2.3)(see 3.16). Relays shall be tested in accordance with method 212 of MIL-STD-202 The following detail and exceptions shall apply

a. Mounting of specimens - As specified in 4.8.11.1b.
b. Test conditions - Test-condition letter A, 17 G's, unless otherwise specified (see 3.1 and 6.2.3) (acceleration shall be applied in each direction along three mutually perpendicular axes of the specimen - one axis shall be in the direction most likely to cause malfunction). In each direction, the coil shall be de-energized for 5 minutes, rated coil voltage (or current) shall be momentarily applied, and the voltage (or current) shall be reduced to one-half rated for an additional 5 minutes. Contacts shall be monitored for proper position.
c. Examination after test - Relays shall be examined for evidence of structural failure or other damage which might impair the operation of the relay.

4.8 13 Terminal strength (see 3.17). Relays shall be tested in accordance with method 211 of MIL-STD-202 and in accordance with the following, as applicable Unless otherwise specified herein, two terminals of each discrete design, size, and configuration shall be tested, however, if there is only one of such design, size, and configuration, it shall be tested.

4.8.13.1 Pull test (all terminal types). Terminals shall be tested as specified in test-condition letter A, the force shall be as specified (see 3.1 and 6.2.3).

4.8.13.2 Bend test (not applicable to plug-in terminals). Terminals shall be tested as specified in test-condition letter B (two bends) or C, as applicable. Loads for test-condition letter C shall be as specified (see 3.1 and 6.2.3).

4.8.13.3 Bend test (plug-in terminals of a standard octal base only). The lesser of five or all terminals shall be tested by applying a force of 5 pounds perpendicular to the axis of the pin within 1/8 inch of the tip of the pin.

4.8.13.4 Twist test (wire lead terminals only). All terminals shall be tested as specified in test-condition letter D, except during application of torsion, each terminal shall be rotated 45 degrees in one direction, then returned to start, rotated in opposite direction 45 degrees, then returned to start. Each terminal shall be subjected to two such rotations and returns. Each terminal shall be held at a point 3/4 inch from the point of emergence from the relay and in one plane shall be bent 20 ±5 degrees in one direction, then returned to start, rotated in opposite direction 20 ±5 degrees, then returned to start, this procedure shall then be repeated in the perpendicular plane.

4.8.13.5 Torque test (screw terminals only). All terminals shall be tested as specified in test-condition letter E, except as follows:

Screw size	Torque pound-inches
4-40	4.4
6-32	10.0
8-32	20.0
10-32	32.0
10-24	35.0

Following these tests, relays shall be examined for evidence of loosening or breaking of the terminals and other damage that could adversely affect the normal operation of the relay.

Source: https://assist.dla.mil -- Downloaded: 2016-11-13T03:20Z
Check the source to verify that this is the current version before use.

4.8.14 Moisture resistance (enclosure 3 relays only)(see 3.18). Relays shall be tested in accordance with method 106 of MIL-STD-202. The following details and exceptions shall apply

a. Mounting - On a corrosion-resistant panel by normal mounting means.
b. Initial measurement - Not applicable.
c. Polarization - During steps 1 through 6, 100 volts dc shall be applied between the coil (positive) and the case, frame, or enclosure (negative), on one-half the sample units.
d. Final measurements. Upon completion of step 6 of the final cycle, insulation resistance shall be measured as specified in 4.8.6. After a 24-hour drying period at a relative humidity of 50 ±5 percent, dielectric withstanding voltage shall be measured as specified in 4.8.7.1, except the test voltage shall be 90 percent of initial potential; and insulation resistance, static contact resistance, and pickup, hold, and dropout voltage (or current) shall be measured as specified in 4.8.6, 4 8.8.1, and 4.8.8.2, respectively.
e. Examination after test - Relays shall be examined for evidence of breaking, cracking, chipping, and loosening of terminals.

4.8.15 Magnetic interference (when specified, see 3.1 and 6.2.3) (see 3.19) Relays shall be tested in accordance with 4.8.15.1 or 4.8.15.2, as specified (see 3.1 and 6.2.3).

4.8.15.1 Uniform-stray-field. The relay shall be mounted by suitable nonmagnetic means within the central volume of the test coil (see 6.6). The critical axis of the relay shall be alined with the longitudinal axis of the test coil. Pickup, hold, and dropout voltage (or current) shall be measured as specified in 4.8.8.2 in 0 magnetic field and in 100 gauss magnetic field of both polarities.

4.8.15.2 Adjacent-similiar-relay. The relay under test and eight similar relays shall be mounted in the same physical orientation by nonmagnetic means, as shown on figure 4. Unless otherwise specified, grid-spaced relays shall be mounted so that all terminals are positioned in the closest possible grid pattern. The spacing between terminals and tops of adjacent terminals shall be as shown on figure 4, unless otherwise specified. Pickup, hold, and dropout voltage (or current) shall be measured on the relay under test as specified in 4.8.8.2 with the coils of the eight outer relays energized at rated voltage (the magnetic polarity of each relay shall be similarly oriented) (see 6.6). This measurement shall be repeated with the coils of the eight outer relays de-energized.

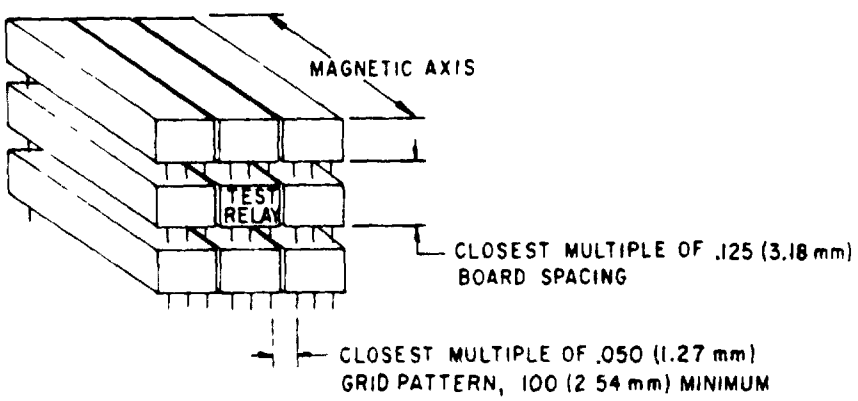

FIGURE 4 Mounting array for adjacent similar relays

Source: https://assist.dla.mil -- Downloaded: 2016-11-13T03:20Z
Check the source to verify that this is the current version before use.

4.8.16 Acoustical noise (when specified, see 3.1 and 6.2.3) (see 3.20). Relays shall be tested in accordance with method 515 of MIL-STD-810. The following details and exceptions shall apply

a. Test category - A The overall noise level and relative power distribution shall be as specified (see 3.1 and 6.2.3).
b. Method of mounting - As specified in 4.8.11.1b.
c Operation during test - Relays shall be tested with the coil energized for 30 minutes at rated voltage (or current), and with the coil de-energized for 30 minutes. Contacts shall be monitored as specified in 4.8.11.1d.
d. Examination after test - Relays shall be examined for evidence of damage.

4.8.17 Sand and dust (enclosures 3 relays only)(see 3.21). Relays shall be tested in accordance with method 110 of MIL-STD-202. The following details and exception shall apply

a. Test-condition letter - A (except during part II, the temperature shall be the maximum temperature rating of the relay, see table III).
b. Measurements after test - Immediately after reaching room temperature, static contact resistance (or voltage drop) and pickup, hold, and dropout voltage (or current) shall be measured as specified in 4.8.8.1 and 4.8.8.2, respectively.

4.8.18 Contact sticking (when specified, see 3.1 and 6.2.3)(see 3.22). Relays shall be energized for 96 hours with 120 percent of rated voltage applied to the coil. No load shall be applied to the contacts. At the end of this period, without physically disturbing the relay, the coil shall be de-energized and the release time shall be measured as specified in 4.8.8 5. This test may be performed as a part of coil life test (see 4.8.19)

4.8.19 Coil life (unless otherwise specified, (see 3.1 and 6.2.3)(see 3.23). Relays shall be tested for 1,000 hours as follows (see figure 5).

a. Relays shall be mounted as specified in 4.4 5 Each contact terminal shall be connected as specified in 4.8.8.1a.
b. During the maximum temperature portion of the test, rated coil voltage (see 3.1 and 6 2.3) shall be applied continuously and at least half of the normally open contacts shall carry rated current During room temperature and minimum temperature exposures, the coil shall be de-energized and contacts shall not be loaded. Ambient temperatures shall be varied as shown on figure 5, with heating and cooling rates not to exceed 1°C per second average. The portion of the cycle run at minimum temperature shall be approximately 10 percent of the test cycle time
c After the first 100 hours, and while still at the low temperature extreme, static contact resistance (or voltage drop) and operate and release time shall be measured as specified in 4.8.8.1 and 4 8.8 5 and the values shall be recorded. Measurements of dc coil resistance and static contact resistance (or voltage drop) as specified in 4.8.8.3 and 4.8.8.1, shall be taken at room temperature initially, then again after 250 ±25, 500 ±25, and 750 ±25 hours and the values shall be recorded. Pickup, hold, and dropout voltage (or current) measurements shall be as made as specified in 4.8.8.2 during the last temperature cycle after allowing the relay to stabilize, de-energized, at each of the temperature extremes, and the values shall be recorded Measurements shall then be taken at room temperature of dielectric withstanding voltage, insulation resistance, static contact resistance, dc coil resistance, operate and release time, and contact bounce as specified in 4.8.7.1, 4.8.6, 4.8.8.1, 4.8 8.3, 4.8.8.5, and 4.8.8.6, respectively. Relays shall then be examined for evidence of damage.

4.8.20 Resistance to soldering heat (when specified, see 3.1 and 6.2.3)(see 3.24). Relays shall be tested in accordance with method 210 of MIL-STD-202 The following details and exception shall apply

a. Depth of immersion in molten solder - Within .060 ±.020 inch of the relay base.
b. Test-condition letter - B.
c Examination after test - As specified in 4.8.11.1e.

Source: https://assist.dla.mil -- Downloaded: 2016-11-13T03:20Z
Check the source to verify that this is the current version before use.

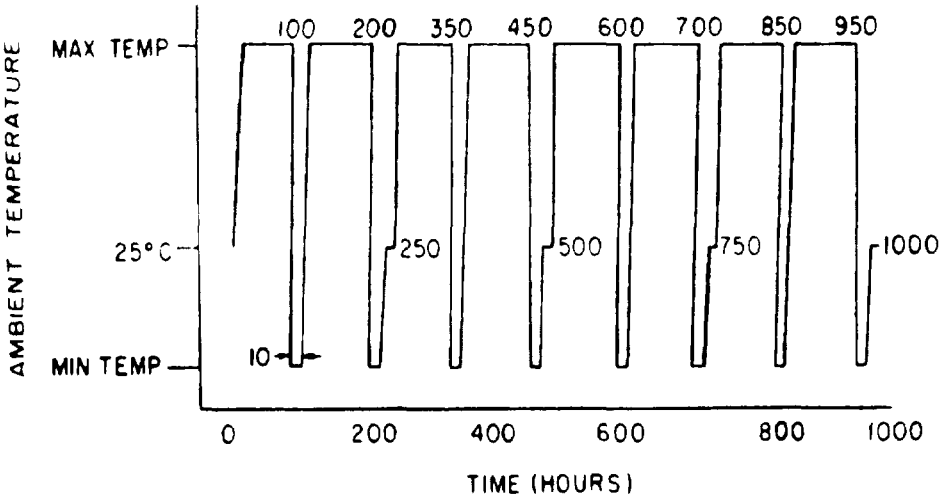

FIGURE 5 Ambient temperatures

4.8.21 Salt spray (corrosion) (see 3.25). Relays shall be tested in accordance with method 101 of MIL-STD-202. The following details and exceptions shall apply

a. Applicable salt solution - 5 percent.
b. Test condition - B.
c. Examination after test - Relays shall be examined for evidence of peeling, chipping, blistering of the finish, and exposure of base metal due to corrosion.

4.8.22 Contact operating differential (when specified, see 3.1 and 6.2.3)(see 3.26). Operating differential shall be measured as specified in 4.8.8.5, except the traces shall be expanded as required.

4.8.23 Contact noise (when specified, see 3.1 and 6.2.3)(see 3.27). Contact noise shall be measured using the test circuit shown on figure 6. The mercury switch shall be pulsed at a rate not to exceed 5 Hz with "on" and "off" time approximately equal. The input filter bandwidth of the oscilloscope shall be set at 600 Hz to 100 kHz. An oscilloscope, such as Tektronix, Inc., type 561A, with type 2A61 plug-in, or equal, shall be used, with its time scale adjusted to 2 ms per centimeter and its gain control adjusted for adequate deflection. The peak-to-peak voltage shall be determined at 10 ms. The oscilloscope trace shall be recorded using an oscilloscope record camera.

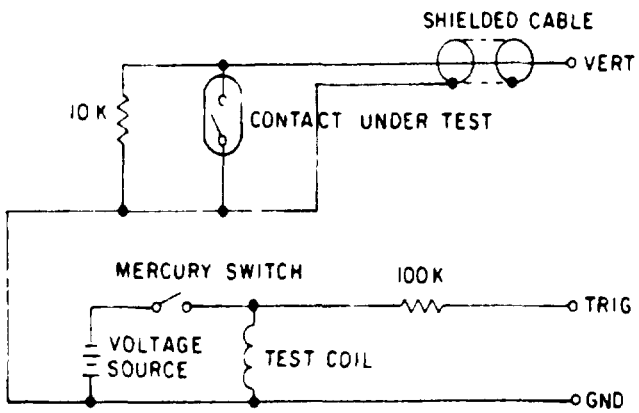

FIGURE 6 Procedure for observing contact noise on closing

Source: https://assist.dla.mil -- Downloaded: 2016-11-13T03:20Z
Check the source to verify that this is the current version before use.

4 8.24 Crosstalk (dry reed relays only and other types when specified, see 3 1 and 6.2.3) (see 3.28). Crosstalk shall be measured using equipment which shall have an input impedance of 1 megohm, minimum, and shall be paralleled with a capacitance of 20 picofarads maximum A 1.0 to 10.0 volts peak-to-peak input signal at frequencies up to 10 megahertz shall be applied to the switching circuit through coaxial cable, terminated in 50 ohms ±5 percent at the device terminal. The coaxial cable shall conform to MIL-C-17 The input signal amplitude shall be measured at the input connection of the switch. The crosstalk signal shall be connected through a similar type coaxial cable, terminated in 50 ohms ±5 percent at the measuring device. The resultant attenuation, in decibels (dB), equals

20 (Log (to the base 10) of E in divided by E out)

4.8.25 Capacitance (when specified, see 3.1 and 6.2.3)(see 3.29) Relays shall be tested in accordance with method 305 of MIL-STD-202. The following detail and exception shall apply

a Test frequency - 1 kilohertz, unless otherwise specified (see 3.1 and 6.2.3).
b. Points of measurement - As specified (see 3 1 and 6.2.3)

4.8.26 Thermal EMF (when specified, see 3.1 and 6.2.3) (see 3 30). The terminals of a normally-open contact shall be soldered to bare copper wire using Sn60 solder conforming to QQ-S-571 (the flux shall be 75 percent alcohol and 25 percent rosin conforming to LLL-R-626, class A, type I, grade WW). The bare copper wire shall be connected to measuring equipment maintained at room temperature. The relay shall be mounted as specified in 4 8 9a The ambient temperature of the test chamber shall be within ±5°C of the maximum temperature rating of the relay (see table III). The coil shall be energized at rated voltage (or current). After 4 hours, the voltage across the bare copper wire shall be measured.

4 8 27 Overload (not applicable to low level relays)(see 3.31). Relay contacts (both normally open and normally closed) shall be subjected to the loads specified in 4.8.27 1 through 4.8.27.3, as applicable. All normally open contacts shall be tested together, then all normally closed contacts tested together. The number of operations shall be 100 for dc contact loads, and 200 for ac contact loads ("on" and "off" times shall be approximately equal). The coil shall be energized at rated voltage Overload current shall be twice rated load current. The opening and closing of all contacts shall be continuously monitored to detect the actual mechanical and electrical switching of the contacts. The equipment shall be capable of monitoring 50 percent of the actual opened and closed time of each contact. The equipment shall automatically cut off when a failure occurs, or shall record any failures. The relay frame, case, or enclosure shall be connected to system-ground through a normal-blow fuse rated at 5 percent of the test load or 100 mA, whichever is greater After the test, the fuse shall be tested for electrical continuity.

4.8.27 1 Resistive. Suitable resistors shall be used Cycling rate shall be 20 ±2 cycles per minute (c/m).

4 8.27.2 Inductive. Cycling rate shall be 10 ±1 c/m.

4 8 27 2.1 Inductive, dc. Unless otherwise specified (see 3.1 and 6 2 3), inductive dc loads shall be computed in accordance with the formula $CE^2 = (0.28) I^{1.18}$. A shunting capacitor shall be placed across the test contacts to absorb the arc energy The voltage across the capacitors shall be measured upon circuit interruption by means of an oscilloscope and shall be taken as the peak value of the first oscillation.

Where W = energy (in joules).
C = capacitance of shunt capacitor (in farads)
E = voltage across capacitor (in volts).
I = maximum dc inductive current rating of the contacts.

The energy thus calculated is the energy which would be dissipated by the contacts if the capacitor were removed. This energy shall be within 10 percent of the energy calculated by the formula $W = (0\ 14) I^{1.18}$. This method of energy measurement requires the use of a pulse-type noninductive capacitor having a working voltage of

Source: https://assist.dla.mil -- Downloaded: 2016-11-13T03:20Z
Check the source to verify that this is the current version before use.

1,000 volts. The size of the capacitor shall be such that the peak voltage measured shall be not less than 200, nor greater than 900 volts. During the overload test, the capacitor shall be disconnected. When specified (see 3.1 and 6.2.3), the inductive load shall have an L/R ratio of 0.008.

4.8.27.2.2 Inductive, ac. The load shall consist of inductive and resistive elements with 0.7 ±0.05 lagging power factor at the voltage and frequency specified (see 3.1 and 6.2.3).

4.8.27.3. Lamp load. Unless otherwise specified, the lamp load shall be performed with the 28 Vdc power supply voltage. Relays shall make 12 times the rated lamp load and break the rated lamp load. The duration of the 12 times inrush shall be 0.015-0.020 second, the total "on" time shall be 2 ±0.05 seconds and the "off" time shall be 7±2 seconds.

4.8.28 Load transfer, 3 phase ac (when specified, see 3.1 and 6.2.3 (see 3.32). Relay contacts shall be subjected to 10,000 operations using the circuit shown on figure 7, or equivalent. The cycling rate shall be 5 ±1 seconds "on" and 5 ±1 seconds "off". The load currents and voltages shall be as specified (see 3.1 and 6.2.3). The fuse shall be rated at 5 percent of the rated load or 100 mA, whichever is greater. The cycling shall be initiated by a single-pole double-throw switching device. Continuous monitoring shall be used to detect phase-to-phase arcing and contact welding (sticking). After the test, the fuse shall be tested for electrical continuity.

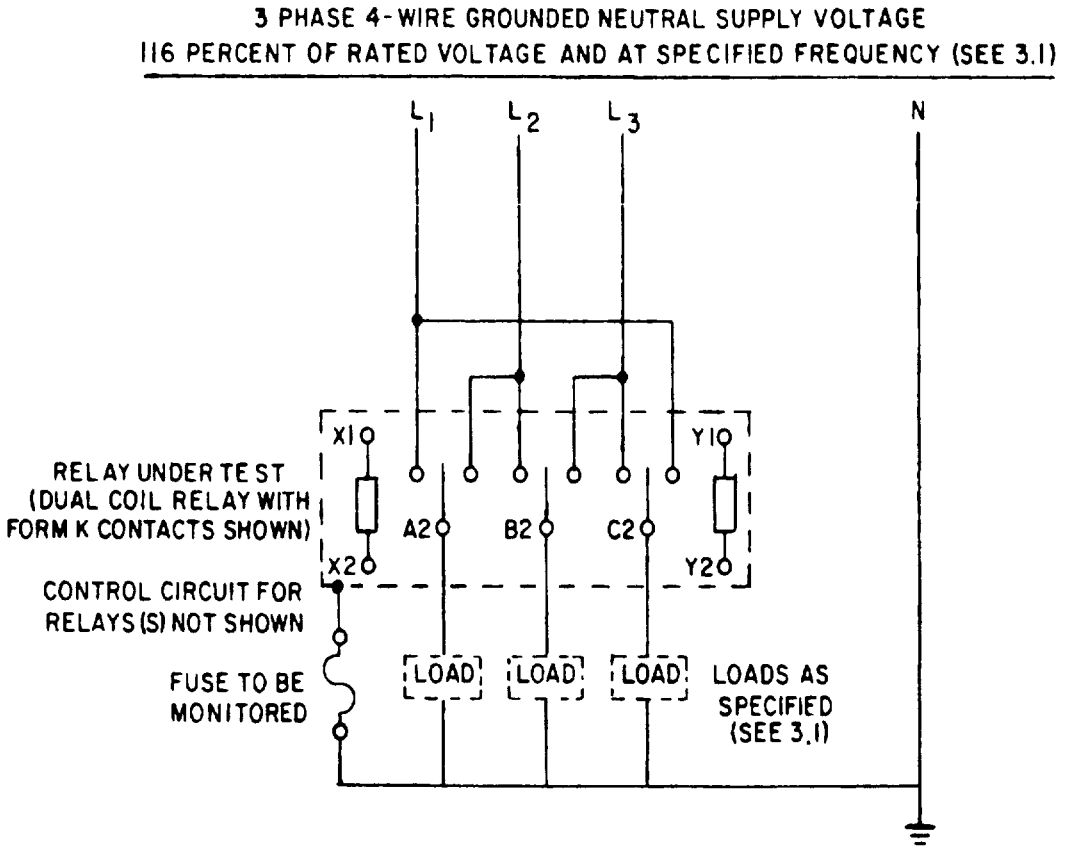

FIGURE 7 Load transfer circuit

Source: https://assist.dla.mil -- Downloaded: 2016-11-13T03:20Z
Check the source to verify that this is the current version before use.

4.8.29 Life (see 3.33). Unless otherwise specified (see 3 1 and 6.2 3), relays shall be cycled for 100,000 operations with contacts loaded in accordance with 4.8.29.1 through 4.8.29.5 as applicable. The relay coil energization shall be nonsynchronous with the power supply for ac loads. The relay case, cover, or enclosure shall be connected to the system-ground by a normal-blow fuse rated at 5 percent of the test current or 100 mA, whichever is greater. This test shall be performed at the maximum ambient temperature of the relay (see table III) With the exception of motor loads, opening and closing of all contacts shall be continuously monitored as specified in 4 8 3 The equipment shall be capable of testing 50 percent of the actual closed time of the contact This equipment shall automatically cut off when a failure occurs, or shall record any failures. After the test, the fuse shall be tested for electrical continuity.

4.8.29.1 Resistive load. Cycling rate shall be 20 ±2 operations per minute Suitable resistors shall be used. Current shall be rated resistive current as specified (see 3 1 and 6 2.3). When specified (see 3.1 and 6.2.3), following the 100,000 operations at rated resistive current, the relay shall be cycled for an additional 400,000 operations with the current reduced to 25 percent of the rated resistive current.

4.8.29.2 Inductive load Current shall be rated current. Appropriate inductive load components (see 4 8.27.2.1) shall be used. A suitable resistor may be placed in the circuit to obtain rated steady-state current flow. Cycling rate shall be 10 ±1 c/m with equal "on" and "off" periods.

4.8.29.3 Lamp load. The load and cycling rate shall be as specified in 4.8 27.3.

4.8.29 4 Motor load. Unless otherwise specified (see 3.1 and 6.2.3), resistors shall be used. Resistive load current shall be five times rated motor load current (see 3 1 and 6.2 3) Cycling rate shall be 2 to 3 c/m with equal "on" and "off" times.

4.8 29.5 Low level. Relays shall be tested in accordance with method 311 of MIL-STD-202 The following details shall apply

a Number of misses which will be considered a failure - One.
b. Maximum contact resistance allowed - As specified in tables V and VI, as applicable.
c. Number of cycles of operation and cycling rate - 100,000 cycles, unless otherwise specified (see 3.1 and 6.2 3) at the rate of 60 to 300 cycles per minute (c/m).
d Contact load - As specified in table V.

4 8.30 Intermediate current (see 3 34). For qualification inspection, relays shall be tested in accordance with 4 8 30.1 or 4 8 30.2, as specified (see 3 1 and 6.2 3). Relays shall be mounted as specified in 4.4 5. The ambient temperature of the test chamber shall be the maximum temperature rating of the relay (see table III). Unless otherwise specified (see 3.1 and 6 2.3), coils shall be energized with rated voltage at the rate specified herein, however, intermittent duty and pulse-operated relays shall be operated as specified (sees 3.1 and 6.2.3). The same type load shall be used for each contact of the same pole Contacts shall be monitored for dynamic contact resistance at each opeation, however, unless other-wise specified (see 3.1 and 6.2 3), contacts carrying rated resistive load need not be monitored Unless otherwise specified (see 3.1 and 6.2 3), contacts shall be loaded as follows, however, if any load specified herein exceeds the contact rating (see 3 1 and 6.2 3), the load shall be as specified (see 3 1 and 6.2.3).

First pole - 0.1 ampere resistive at 28 ±1 volts dc
Second pole - 0 3 ampere inductive (220 millihenries) at 28 ±1 volts dc.
Third pole - 0.5 ampere resistive at 28 ±1 volt dc.
Fourth pole - Rated resistive at 28 ±1 volts dc

NOTE Single-pole relays shall not be tested at rated resistive load and the other three loads shall be distributed throughout the test sample in the order shown Two-pole and three-pole relays shall have one pole loaded with rated resistive load and the other three loads shall be distributed throughout the test sample in the order shown. Relays having more than four poles shall alternate the 0.1 ampere resistive and rated loads on the remaining poles.

Source: https://assist.dla.mil -- Downloaded: 2016-11-13T03:20Z
Check the source to verify that this is the current version before use.

For group B inspection, relays shall be tested as specifiesd herein, except the operations shall be 10,000.

4.8.30.1 Level I. Relays shall be subjected to 100,000 operations (unless otherwise specified, see 3.1 and 6.2.3) at the rate of 20 ±2 cycles per minute, with "on" and "off" times approximately equal.

4.8.30.2 Level II. Relays shall be subjected to 50,000 operations (unless otherwise specified, see 3.1 and 6.2.3) at the rate of 29 ±3 seconds "on" and 1.5 ±0.5 seconds "off".

4.8.31 Resistance to solvents (see 3.35). Relays shall be tested in accordance with method 215 of MIL-STD-202. The following details and exceptions shall apply:

a. Portion to be brushed - All marking.
b. Specimens to be tested - Two, using first solvent solution And one specimen each, using second and third solvent solutions. A total of four specimens shall be used.
c. Examination - Specimens shall be examined for illegibility of marking.

5. PACKAGING

5.1 Preservation. Preservation shall be level A, C or commercial, or as specified (see 6.2).

5.1.1 Level A.

5.1.1.1 Cleaning Relays shall be cleaned in accordance with MIL-P-116, process C-1.

5.1.1.2 Drying. Relays shall be dried in accordance with MIL-P-116.

5.1.1.3 Preservative applications. Preservatives shall not be used.

5.1.1.4 Unit packs. Unless otherwise specified (see 6.2), each relay shall be individually unit packed in accordance with the methods of MIL-P-116 designated herein insuring compliance with the applicable requirements of that specification.

5.1.1.4.1 Hermetically sealed relays. Hermetically sealed relays shall be individually unit packed in accordancae with MIL-P-116, method III.

5.1.1.4.2 Nonhermetically sealed relays. Nonhermetically sealed relays shall be individually unit packed in accordance with MIL-P-116, submethod IA-8.

5.1.1.5 Intermediate packs. Relays, packaged as specified in 5.1.1.4, shall be placed in intermediate containers conforming to PPP-B-566 or PPP-B-676. Intermediate containers shall be uniform in size, shape and quantities, shall be of minimum tare and cube and shall contain multiples of five unit packs, not to exceed 100 unit packs. No intermediate packs are required when the total quantity shipped to a single destination is less than 100 unit packs.

5.1.2 Level C. The level C preservation for relays shall conform to the MIL-STD-794 requirements for this level.

5.1.3 Commercial. The commercial preservation of relays shall be in accordance with the requirements of MIL-STD-1188.

5.2 Packing. Packing shall be level A, B, C or commercial, or as specified (see 6.2).

5.2.1 Level A. The packaged relays shall be packed in fiberboard containers conforming to PPP-B-636, class weather resistant, style optional, special requirements. in lieu of the closure and waterproofing requirement in the appendix of PPP-B-636, closure and waterproofing shall be accomplished by sealing all seams, corners and manufacturer's joints with tape, two inches minimum width, conforming to PPP-T-60, class 1 or PPP-T-76. Banding (reinforcement requirements) shall be applied in accordance with the appendix to PPP-B-636 using nonmetallic or tape banding only.

Source: https://assist.dla.mil -- Downloaded: 2016-11-13T03:20Z
Check the source to verify that this is the current version before use.

5.2.2 Level B. The packaged relays shall be packed in fiberboard containers conforming to PPP-B-636, class domestic, style optional, special requirements. Closure shall be in accordance with the appendix thereto.

5.2.3 Level C. The level C packing for relays shall conform to the MIL-STD-794 requirements for this level.

5.2.4 Commercial. The preserved relays shall be packed in accordance with the requirements of MIL-STD-1188.

5.2.5 Unitized loads. Unitized loads, commensurate with the level of packing specified in the contract or order, shall be used whenever total quantities for shipment to one destination equal 40 cubic feet or more. Quantities less than 40 cubic feet need not be unitized. Unitized loads shall be uniform in size and quantities to the greatest extent practicable.

5.2.5.1 Level A. Relays, packed as specified in 5.2.1, shall be unitized on pallets in conformance with MIL-STD-147, load type I, with a fiberboard cap (storage aid 4) positioned over the load.

5.2.5.2 Level B. Relays, packed as specified in 5.2.2, shall be unitized as specified in 5.2.4.1 except that the fiberboard caps shall be class domestic.

5.2.5.3 Level C. Relays, packed as specified in 5.2.3, shall be unitized as specified in MIL-STD-794 except that conformance to MIL-STD-147 is not required.

5.3 Marking.

5.3.1 Levels A, B, and C. In addition to any special or other identification marking required by the contract (see 6.2), each unit pack, intermediate and exterior container and unitized load shall be marked in accordance with MIL-STD-129.

5.3.2 Commercial. Commercial marking shall be in accordance with the requirements of MIL-STD-1188.

5.4 General.

5.4.1 Exterior containers. Exterior containers (see 5.2.1, 5.2.2, and 5.2.3) shall be of a minimum tare and cube consistent with the protection required and shall contain equal quantities of identical stock numbered items to the greatest extent practicable.

5.4.2 Packaging inspection. The inspection of these packaging requirements shall be in accordance with 4.7.3.

5.4.3 Army procurements.

5.4.3.1 Level A unit and intermediate packs. All unit and intermediate containers shall be either weather (or water) resistant or overwrapped with waterproof barrier materials (see 5.1.1.4.1 and 5.1.1.5).

5.4.3.2 Level A and level B packing. For level A packing the fiberboard containers shall not be banded but shall be placed in a close fitting box conforming to PPP-B-601, overseas type, PPP-B-621, class 2, style 4 or PPP-B-585, class 3, style 2 or 3. Closure and strapping shall be in accordance with applicable container specification except that metal strapping shall conform to QQ-S-781, type I, finish A. When the gross weight exceeds 100 pounds or the container length and width is 48 x 24 inches or more and the weight exceeds 100 pounds, 3 x 4 inch skids (laid flat) shall be applied in accordance with the requirements of the container specification. If not described in the container specification, the skids shall be applied in a manner which will adequately support the item and facilitate the use of material handling equipment. For level B packing, fiberboard boxes shall be weather resistant as specified in level A and the containers shall be banded (see 5.2.1 and 5.2.2).

Source: https://assist.dla.mil -- Downloaded: 2016-11-13T03:20Z
Check the source to verify that this is the current version before use.

5.4.3.3 Level A and B unitization. For level A and B unitization, softwood pallets conforming to NN-P-71, type IV, size 2 shall be used. Weather resistant fiberboard caps shall also be used for level B unitization. The loads for both levels shall be bonded to the pallets by strapping conforming to QQ-S-781, type I, finish A or shrink film (see 5.2.5.1 and 5.2.5.2).

6. NOTES

6.1 Intended use. Relays conforming to this specification are intended for use in dc or ac (single or polyphase) electronic and communication equipment as a means of controlling the making and breaking of circuits for electrically operated equipment and devices. Their principal areas of application are for aircraft, missiles, spacecraft, and ground-support electronic and communication equipment This does not preclude the use of these relays in other military applications. This specification excludes thermal and completely solid state type relays. For established reliability relays, see MIL-R-39016 "Relays, Electromagnetic, Establlished Reliability, General Specification For". Consult MIL-STD-1346, Relays Selection and Application, as to selection and application.

6.1.1 Contact rating. The contact ratings of relays covered by this specification are based on load endurance tests which establish the relay capability to switch rated loads, minimum loads from 100 mA up to rated loads, and low level loads. Performance may be unsatisfactory when contact current or voltage differs substantially from the rated values.

6.1.2 Voltage rating. Users of relays are cautioned that a 115/200 V rating implies that the relay is designed for use in a 3 phase system. The contacts may not be capable of switching 200 V. For cirucit applications requiring relay contacts to interrupt 200 volts, the manufacturers of the relay should be consulted.

6.1.3 Intermediate current (minimum current). The current range within which the contact arc intensity is insufficient to consistently burn away carbonaceous materials on contact faces. The carbonaceous deposits are a result of breakdown of gases within a relay which originates from contaminants such as cleaning fluids, outgassing of materials within the relay, etc., which are broken down to carbon within the contact arc.

NOTE Because intermediate current testing is exceedingly time consuming and because 50,000 operations of test cycles is sufficent to prove compliance capability, relays can be safely used for 100,000 operations applications.

6.1.4 Load transfer rating. Relays should not be used in 3-phase load transfer applications unless a 3-phase ac load transfer rating specifying both current and system voltage is specified.

NOTE When two position relays (typically with form C contacts) are considered for transferring loads from one source to another, even relays with large contact gaps and slow operate and release times should be properly derated. Reliance should not be misplaced on sophisticated relay coil control circuitry, since the transfer time depends only on the operate and release times of the relay. Transfer relay contacts shall not be used to ground load in one position and to 115 volt terminal in other position. Transfer relay contacts shall not be used to transfer load between phases, nor between unsynchronized ac sources.

6.1.5 Paralleling contacts. Contacts shall not be paralleled on the assumption that doing so will increase their switching capacity. Being paralleled for the sake of redundancy may result in make-before-break instead of break-before-make, due to one transfer contact operating slightly ahead of the other.

6.1.6 Latching relays. When latching relays are installed in equipment, the latch and reset coils should not be pulsed simultaneously. Coils should not be pulsed with less than the nominal coil voltage and the pulse width should be a minimum of three times the specified operate time of the relay. If these conditions are not followed, it is possible for the relay to be in the magnetically neutral position.

6.2 Ordering data. The acquisition document should specify the following

Source: https://assist.dla.mil -- Downloaded: 2016-11-13T03:20Z
Check the source to verify that this is the current version before use.

6.2.1 Category I relays (items covered by specification sheets, see 3.2.1).

a. Title, number, and date of this specification.
b. Title, number, and date of the applicable specification sheet, and the part number.
c. Inspection of commercial packaging (see 4.7.3).
d. Levels of preservation and packing required (see 5.1 and 5.2).
e. Special or other identification marking if required (see 5.3.1).

6.2.2 Category II relays (qualified relays with modification, see 3.2.2).

a. Title, number, and date of this specification.
b. Title, number, and date of applicable specification sheet for similar relay.
c. Military part number of similar qualified relay.
d. Manufacturer's part number of modified relay.
e. Details of the variations from the specification sheet.
f. Inspection requirements (to verify variations from category I relays) (see 4.6)
   (1) Tests to be performed (if any).
   (2) The laboratory at which inspection is to be performed.
   (3) Samples and submission of data, if other than that specified.
g. The packaging and packing level specified (see section 5).

NOTE A copy of the drawing furnished to cover the description of the variations from the specification sheet, shall be sent to the preparing activity as listed on the individual specfication sheet.

6.2.3 Category III relays (items not covered by specification sheets) (see 3.2.3). For relays not covered by specification sheets, the contract or purchase order should specify the following

a. Title, number, and date of this specification.
b. Enclosure design, vibration characteristic, temperature range, and shock type (see 1.2.1, through 1.2.4).
c. Design, construction, weight, and dimensions and whether or not repairable (see 3.5).
d. Whether hermetically sealed relays are not sealed by welding (see 3.5.4).
e Contact ratings (see 3.5.5).
f. Coil resistance, coil voltage (or current), and duty cycle, if latching relay or intermittent duty (see 3.5 6) (see 3.12.3).
g Circuit diagram (see 3.5 7).
h. Mounting means (see 3.5 8)
i. Terminals (see 3.5.9).
j Switch capsules of dry reed relays (see 3.5.10)
k. Flux density of permanent magnets (see 3.5.14).
l. If internal moisture is required (see 3.6)
m. If run-in is required (see 3.7).
n. If solderability test is applicable (see 3.8).
o. Applicable insulation resistance values (see 3.10).
p. Pickup, hold, and dropout voltage (see 3.12.2).
q. Coil inductance, if applicable (see 3.12.4).
r Operate and release time (see 3.12.5).
s. Applicable bounce time and duration (see 3.12.6).
t Applicable open time of closed contacts during vibration (see 3.15).
u. Applicable acceleration test value (see 3.16 and 4.8.12).
v Applicable pickup and dropout voltage values for magnetic interference test, and procedure and dimensions (see 3.19, 4.8.15, or 4.8.15.1).
w. Applicable value of contact opening during shock test, and details of procedure (see 3.14 and 4.8.10).
x. Whether acoustical noise test is applicable (see 3.20).
y. Applicable current values for intermediate current test and procedure (see 3.34, 4.8.30).
z. Whether contact sticking test is applicable (see 3.22).
aa. Whether resistance to soldering heat test is applicable (see 3.24).
ab. Applicable contact operating differential time (see 3.26).
ac. Applicable attentuation for contact noise test (see 3.27).
ad. Applicable attenuation for cross-talk test (see 3.28).
ae. Applicable capacitance value for capacitance test, and frequency and points of measurement for procedure (see 3.29).

Source: https://assist.dla.mil -- Downloaded: 2016-11-13T03:20Z
Check the source to verify that this is the current version before use.

af. Applicable voltage for thermal EMF test (see 3.30).
ag. Applicable overload test and inductance computation or value (see 3.31, 4 8.27.2.1, and 4.8.27 2.2).
ah. Applicable contact ratings during 3-phase load transfer test (see 3.32).
ai. Applicable marking (see 3.36).
aj. Applicable voltage for dielectric withstanding voltage test and if dielectric withstanding voltage at reduced barometric pressure is required (see 4.8 7).
ak. Applicable current and voltage for contact bounce test (see 4.8.8.6).
al. Applicable values for terminal strength tests (see 4.8.13).
am. Applicable test procedure and operations for life tests (see 4.8.29).
an. The packaging and packing level required (see section 5).

6.2.4 Indirect shipments. The preservation and packaging, packing, and marking specified in section 5 apply only to direct purchases by or direct shipments to the Government and are not intended to apply to contracts or orders between the contractor and prime contractor.

6.3 Qualification. With respect to products requiring qualification, awards will be made only for products which are at the time set for opening of bids, qualified for inclusion in applicable Qualified Products List QPL 5757 whether or not such products have actually been so listed by that date. The attention of the contractors is called to this requirement, and manufacturers are urged to arrange to have the products that they propose to offer to the Federal Government tested for qualification in order thay they may be eligible to be awarded contracts or orders for the products covered by this specification. The activity responsible for the Qualified Products List is the Naval Electronics System Command, Code 0517, Department of the Navy, Washington, D.C. 20360, however, information pertaining to qualification of products may be obtained from the Defense Electronics Supply Center (DESC), Dayton, OH 45444. Application for qualification tests shall be made in accordance with Provisions Governing Qualification SD-6 (see 6.3.1).

6.3.1 Copies of "Provisions Governing Qualification SD-6" may be obtained upon application to Commanding Officer, Naval Publications and Forms Center, 5801 Tabor Avenue, Philadelphia, PA 19120

6.4 Sealing (degassing). The following procedure is suggested as a guide; however, every effort should be made to utilize the most effective procedure consistent with the state of the art.

a. Evacuate to less than 200 microns.
b. Heat to maximum rated ambient temperature with continued evacuation (see 3.1).
c. Maintain heat and vacuum for 12 hours or longer, continuing the treatment until a maximum pressure of 80 microns is reached.
d. Turn off heaters and maintain pressure for 4 hours.
e. Close evacuation valve and fill chamber with the desired inert pressurizing gas.
f. Seal relay before removing from chamber.

6.5 Intermetallic contact. The finishing of metallic areas to be placed in intimate contact by assembly presents a special problem, since intermetallic contact of dissimilar metals results in electrolytic couples which promote corrosion through galvanic action. To provide the required corrosion protection, intermetallic couples are restricted to those permitted by table XII. Table XII shows metals and alloys (or plates) by groups which have common electromotive forces (EMF) within 0.05 volt when coupled with a saturated calomel electrode in sea-water at room ambient temperatures. All members of a group are considered as completely compatible, one with the other. Compatible couples between groups have been specified in table XII based on a potential difference of 0.25 volt maximum. To simplify any arithmetic involved, table XII shown, in addition to EMF against a calomel electrode, a derived "anodic index" with group A (gold, etc.) as 0 and group 18 (magnesium, etc.) as 175. Subtraction of a lower group anodic index gives the EMF difference in hundredths of a volt.

Source: https://assist.dla.mil -- Downloaded: 2016-11-13T03:20Z
Check the source to verify that this is the current version before use.

6.5.1 Groups. Table XII sets up 18 primary groups. It may be noted that neither the metallurgical similarity or dissimilarity of metals is the parameter for selection of compatible couples. All members within a group, regardless of metallurgical similarity, are considered inherently nonsusceptible to galvanic action, when coupled with any member within the group, for example, such dissimilar metals as platinum and gold. Similarly, such basically dissimilar alloys as austenitic stainless steel, silver-solder, and low brass (all members of group 5) are inherently nonsusceptible when coupled together.

6.5.2 Compatibility graphs. Permissible couple series are shown in table XII by the graphs at the right. Members of groups connected by lines will form permissible couples. A O indicates the most cathode member of each series, a o an anodic member, and the arrow indicates the anodic direction.

6.5.3 Selection of compatible couples. Proper selection of metals in the design of equipment will result in fewer intermetallic contact problems. For example, for sheltered exposure, neither silver nor tin require protective finishes. However, since silver has an anodic index of 15 and tin 65, the EMF generated as a couple is 0.50 volt, which is not allowable by table XII. In this case, other metals or platings will be required It should be noted that, in intermetallic couples, the member with the higher anodic index is anodic to the member with the lower anodic index and will be susceptible to corrosion in the presence of an electrolytic medium. If the surface area of the cathodic part is significantly greater than that of the anodic part, the corrosive attack on the contact area of the anodic part may be greatly itensified. Material selection for intermetallic contact parts, therefore, should establish the smaller part as the cathodic member of the couple, whenever practicable.

6.5 4 Plating. When base metals intended for intermetallic contact form couples not allowed by table XII, they are to be plated with those metals which will reduce the potential difference to that allowed by table XII.

6.6 Magnetic orientation. Magnetic orientation of a relay may be determined by energizing the coil with a known polarity and checking for attraction or repulsion of a permanent magnet to an external surface of the relay.

6.7 Glossary. The definitions listed below are not a complete glossary of relay terminology, but rather are intended as definitions of the technical terms as applied within the specification.

Actuator - That part of the relay that converts electrical power into force.

Armature - The moving magnetic member of an electro-magnetic relay structure.

Armature gap - The distance in air separating the magnetic portion of the armature, when fully restored to its unoperated position, and the coil core face.

Backstop - That part of the relay which limits the movement of the armature away from the pole face or core. In some relays a normally closed contact may serve as backstop.

Bifilar winding - Two or more windings with the wire of each winding alongside the other, matching turn for turn, may be either inductive or noninductive.

Bistable (latching) relay - A two-position relay whose contacts transfer only as as result of coil energization (depending on design) (of either a particular polarity, or of a particular coil), remain in that position with no coil energization, and transfer to the alternate position only as a result of coil energization (of either the opposite polarity, or of the other coil, respectively).

Bounce time - The interval between first make of the contact until the uncontrolled making and breaking of the contact ceases.

Source: https://assist.dla.mil -- Downloaded: 2016-11-13T03:20Z
Check the source to verify that this is the current version before use.

TABLE XII Compatible couples (see 6.5.1) [1]

Group No	Metallurgical category	EMF (volt)	Anodic index (0.01 v)	Compatible couples
1	Gold, solid and plated, gold-platinum alloys, wrought platinum (most cathodic)	+0.15	0	
2	Rhodium plated on silver-plated copper	+0.05	10	
3	Silver, solid or plated, high silver alloys	0	15	
4	Nickel, solid or plated, monel metal, high nickel-copper alloys	-0.15	30	
5	Copper, solid or plated, low brasses or bronzes, silver solder, German silver, high copper-nickel alloys, nickel-chromium alloys, austenitic corrosion-resistant steels	-0.20	35	
6	Commercial yellow brasses and bronzes	-0.25	40	
7	High brasses and bronzes, naval brass, Muntz metal	-0.30	45	
8	18 percent chromium type corrosion-resistant steels	-0.35	50	
9	Chromium, plated, tin, plated, 12 percent chromium type corrosion-resistant steels	-0.45	60	
10	Tin-plate, terneplate, tin-lead solder	-0.50	65	
11	Lead, solid or plated, high lead alloys	-0.55	70	
12	Aluminum, wrought alloys of the duralumin type	-0.60	75	
13	Iron, wrought, gray, or malleable, plain carbon and low alloy steels, armco iron	-0.70	85	
14	Aluminum, wrought alloys other than duralumin type, aluminum, case alloys of the silicon type	-0.75	90	
15	Aluminum, cast alloys other than silicon type, cadmium, plated and chromated	-0.80	95	
16	Hot-dip-zinc plate, galvanized steel	-1.05	120	
17	Zinc, wrought, zinc-base die-casting alloys, zinc, plated	-1.10	125	
18	Magnesium and magnesium-base alloys, cast or wrought (most anodic)	-1.60	175	

1/ Compatible couples - potential difference of 0.25 volt maximum between groups.

Source: https://assist.dla.mil -- Downloaded: 2016-11-13T03:20Z
Check the source to verify that this is the current version before use.

Break time - The break time is the amount of time that the movable contact is not closed to one stationary contact or the other, while the relay is being cycled, expressed as a percentage of the total cycle time. In telegraphy, the time that the contacts are open during transfer from mark to space and from space to mark. Usually expressed as a percent of total cycle time. Contact efficiency, the percentage of time that the contacts are conducting, is equal to 100 percent minus the break time percentage. All these times depend upon the coil current, supply voltage, and the wave form.

Chatter, contact - The undesired vibration of mating cntacts resulting from uncompensated ac operation, or from external shock and vibraiton.

Coil - One or more windings on a common form.

Concentric winding - A coil with two or more insulated windings, wound radially one over the other.

Contacts - The current-carrying parts of a relay that open or close electrical circuits.

Contact, bifurcated - A forked or branched, contacting member so formed or arranged, as to provide dual contacting.

Contact, dry reed - A glass enclosed magnetically operated contact using reeds as the contacting members.

Contact, movable - A member of a contact arrangement that is moved directly by the actuating system.

Contact, stationary - A member of a contact arrangement that is not moved by the actuating system.

Contact arrangement - The combination of contact forms that make up the entire relay switching structure.

Contact bounce - Intermittent opening of contacts as they close, due to contact inpact.

Contact force - The force exerted by a movable contact against a fixed contact when the contacts are closed.

Contact gap - The distance between a pair of mating relay contacts when the contacts are open.

Contact weld - A contact failure due to fusing of closed contacts, resulting in their failure to open.

Hermetically sealed relay - A relay contained within an enclosure that is sealed by fusion to insure a low rate of gas leakage. This usually refers to metal-to-metal, or metal-to-glass sealing.

Hold current or voltage - As the current or voltage applied to the coil on an operated relay is decreased, the value must be reached before any contact change occurs.

Intermediate current - The value of current at, or below, which there is insufficient current density at the mating contact surfaces to insure low contact resistance for the kind of contact material, shape, and pressure employed, or enough arcing to break down insulating deposits.

Latching relay - A bistable relay.

Monostable relay - A (two-position and three position) relay whose contacts remain in or return to their normal (de-energized) position when no coil is energized.

Non-operating current or voltage - The maximum coil current or voltage at which a relay remains in the de-energized condition.

Source: https://assist.dla.mil -- Downloaded: 2016-11-13T03:20Z
Check the source to verify that this is the current version before use.

Operate time - The interval between the application of a step function input signal and closing of all normally open contacts. Bounce time is not included.

Pickup current or voltage - The current or voltage at which the armature seats against the coil core by assuming its fully operated position.

Relay - Most simply defined as an electrically controlled device that opens and closes electrical contacts to effect the operation of other devices in the same or another electrical circuit.

Relay, bistable - A two-position relay capable of remaining in either position when a coil signal is removed and of being driven to the opposite position only by applying a signal of suitable polarity. (Bistable relays are sometimes referred to as polar, latching relays which differ from latching relays having separate and non-polar inputs for latching and unlatching, respectively).

Relay, null-seeking - A relay of double-throw configuration and a stable center-off position. Either side of the double-throw contact can be activated by and for the duration of the polar actuating signal.

Realy, sensitive - A relay that operates on low input power, commonly defined as 100 milliwatts or less.

Release time - The interval between the trailing edge of a step function input signal and closing of all normally closed contacts. Bounce time is not included.

Saturation - The condition attained in a magnetic material when an increase in magnetizing (coil) curent produces no appreciable increase in flux.

Sensitivity - Pickup current or voltage.

Talk, cross (cross-talk) - For the purpose of this specification, cross talk is defined as the signal in decibels (dB) down coupled across the open contacts of a switching device or the signal coupled between switching circuits within the same device.

Tandem winding - A coil having two or more windings, one behind the other, along the longitudinal axis.

Telephone-type relay - A relay with an end-mounted coil, an "L" shaped heelpiece, and contact springs parallel to the axis of the coil.

Time, contact bounce - The time interval from initial actuation of a contact to the end of bounce during pickup and dropout.

Time, operate - The time interval from coil energization to the functioning time of the last contact to function. Unless otherwise stated, it does not include contact bounce time.

Time, release - The time interval from coil de-energization to the functioning time of the last contact to function. Unless otherwise stated, it does not include bounce time.

Time, transfer - The time interval between the opening of the closed contact and the closing of the open contact and vice versa, of a break-make-contact combination.

Voltage, rated coil, or voltage nominal - The coil voltage at which the relay is intended to operate for the prescribed duty cycle.

6.8 Changes from previous issue. Asterisks are not used in this revision to identify changes with respect to the previous issue, due to the extensiveness of the changes.

Source: https://assistdla.mil -- Downloaded: 2016-11-13T03:20Z
Check the source to verify that this is the current version before use.

Custodians
Army - ER
Navy - EC
Air Force - 85

Review activities
Army - MI, AV
Navy - AS, OS,
Air Force - 11, 99
DLA - ES

User activities
Army - AT, ME
Navy - MC
Air Force -

Agent
DLA - ES

Preparing activity
Navy - EC

(Project 5945-0447)

Source: https://assist.dla.mil -- Downloaded: 2016-11-13T03:20Z
Check the source to verify that this is the current version before use.

INSTRUCTIONS In a continuing effort to make our standardization documents better, the DoD provides this form for use in submitting comments and suggestions for improvements All users of military standardization documents are invited to provide suggestions This form may be detached, folded along the lines indicated, taped along the loose edge *(DO NOT STAPLE)*, and mailed In block 5, be as specific as possible about particular problem areas such as wording which required interpretation, was too rigid, restrictive, loose, ambiguous, or was incompatible, and give proposed wording changes which would alleviate the problems Enter in block 6 any remarks not related to a specific paragraph of the document If block 7 is filled out, an acknowledgement will be mailed to you within 30 days to let you know that your comments were received and are being considered

NOTE This form may not be used to request copies of documents, nor to request waivers, deviations, or clarification of specification requirements on current contracts Comments submitted on this form do not constitute or imply authorization to waive any portion of the referenced document(s) or to amend contractual requirements

(Fold along this line)

(Fold along this line)

DEPARTMENT OF THE NAVY

NO POSTAGE NECESSARY IF MAILED IN THE UNITED STATES

OFFICIAL BUSINESS
PENALTY FOR PRIVATE USE $300

BUSINESS REPLY MAIL
FIRST CLASS PERMIT NO 12503 WASHINGTON D C

POSTAGE WILL BE PAID BY THE DEPARTMENT OF THE NAVY

COMMANDER
NAVAL ELECTRONIC SYSTEMS COMMAND (ELEX 8111)
WASHINGTON, DC 20360

Source: https://assist.dla.mil -- Downloaded: 2016-11-13T03:20Z
Check the source to verify that this is the current version before use.

STANDARDIZATION DOCUMENT IMPROVEMENT PROPOSAL

(See Instructions – Reverse Side)

1 DOCUMENT NUMBER	2 DOCUMENT TITLE

3a NAME OF SUBMITTING ORGANIZATION	4 TYPE OF ORGANIZATION *(Mark one)*
b ADDRESS *(Street City State ZIP Code)*	☐ VENDOR ☐ USER ☐ MANUFACTURER ☐ OTHER *(Specify)* _____

5 PROBLEM AREAS

a. Paragraph Number and Wording

b. Recommended Wording

c. Reason Rationale for Recommendation

6 REMARKS

7a NAME OF SUBMITTER *(Last First MI)* – Optional	b WORK TELEPHONE NUMBER *(Include Area Code)* – Optional
c MAILING ADDRESS *(Street City State ZIP Code)* – Optional	8 DATE OF SUBMISSION *(YYMMDD)*

DD FORM 82 MAR 1426 PREVIOUS EDITION IS OBSOLETE

Source: https://assist.dla.mil -- Downloaded: 2016-11-13T03:20Z
Check the source to verify that this is the current version before use.