INCH-POUND

MIL-STD-147D
10 DECEMBER 1988
SUPERSEDING
MIL-STD-147C
30 AUGUST 1979

MILITARY STANDARD

PALLETIZED UNIT LOADS

AMSC N/A

AREA PACK

DISTRIBUTION STATEMENT A. Approved for public release; distribution is unlimited.

Source: https://assist.dla.mil -- Downloaded: 2017-02-09T05:28Z
Check the source to verify that this is the current version before use.

DEPARTMENT OF DEFENSE
Washington, DC 20402

Palletized Unit Loads

1. This military standard is approved for use by all Departments and Agencies of the Department of Defense.

2. Beneficial comments (recommendations, additions, deletions) and any pertinent data which may be of use in improving this document should be addressed to: Director, U.S. Army Materiel Command Packaging, Storage, and Containerization Center, ATTN: SDSTO-TE-S, Tobyhanna, PA 18466-5097, by using the Standardization Document Improvement Proposal (DD Form 1426) appearing at the end of this document or by letter.

Source: https://assist.dla.mil -- Downloaded: 2017-02-09T05:28Z
Check the source to verify that this is the current version before use.

CONTENTS

			Page
Paragraph	1.	SCOPE	1
	1.1	Purpose	1
	1.2	Application	1
	1.3	English-metric conversion	1
	2.	REFERENCED DOCUMENTS	4
	2.1	Government documents	4
	2.2	Other publications	5
	2.3	Order of precedence	6
	3.	DEFINITIONS	7
	4.	GENERAL REQUIREMENTS	13
	4.1	Abbreviations	13
	4.2	Formation of the load	14
	5.	DETAILED REQUIREMENTS	17
	5.1	Formation of the palletized load	17
	5.2	Load types	19
	5.3	Bonding methods	22
	5.4	Storage aids	28
	5.5	Marking	40
	6.	NOTES (Not applicable)	

APPENDIXES

Appendix	A.	Classification of commodities or units by load type	65
	B.	Load pattern selection	83
	C.	Standard containers for modular packaging unitization	92

TABLES

Table	I.	Standard English-metric equivalents	2
	II.	MIL-STD-147 English-metric conversions	3
	III.	Load pattern determination	84
	IV.	Standard unit containers	95

Source: https://assist.dla.mil -- Downloaded: 2017-02-09T05:28Z
Check the source to verify that this is the current version before use.

CONTENTS - Continued.

			Page
Table	V.	Standard unit and intermediate containers	95
	VI.	Standard exterior cleated plywood containers	96
	VII.	Standard exterior nailed wood containers	96
	VIII.	Standard exterior wirebound containers	97
	IX.	Standard exterior triple-wall fiberboard containers	97
	X.	Standard exterior double-wall fiberboard containers	98
	XI.	Unit load arrangements of exterior containers on a 40- by 48-inch pallet	98
		INDEX	102

Source: https://assist.dla.mil -- Downloaded: 2017-02-09T05:28Z
Check the source to verify that this is the current version before use.

1. SCOPE

1.1 Purpose. This standard establishes the methods, materials, and techniques to be employed in the formation of bonded palletized unit loads of military supplies which are adaptable to unit loading. The methods prescribed herein are to be utilized with the standard, general purpose, 40- by 48-inch pallet conforming to MIL-P-15011 or NN-P-71. However, the various methods of bonding and types of storage aids may be modified for use with other size pallets. This standard will not be used for the palletization of ammunition, explosives, or semiperishable subsistence unless specifically prescribed by the cognizant technical activity. (Ammunition unit loads shall be in accordance with MIL-STD-1660, while semiperishable subsistence unit loads shall be in accordance with MIL-L-35078.)

1.2 Application. The contents of this standard apply to contracts requiring the preparation and shipment of bonded palletized unit loads for DOD facilities. It is also applicable for the movement of materiel between or within the military services.

1.2.1 The guidance herein may be applied independently or collectively. Variations from the load types or in the application and use of bonding methods and storage aids to meet unusual requirements are permitted but should be coordinated with and approved by the requiring agency or activity prior to implementation.

1.2.2 The applicable loading patterns are listed numerically in figure 51 of appendix B. Determination of the applicable pattern shall be accomplished by referring to table III of appendix B. Loads will be tied by reversing the pattern for each layer.

1.3 English-metric conversion. To accommodate the requirements of DOD Directive 4120.18, Metric System of Measurement, two tables describing English-metric conversion applicable to this standard are provided, beginning on page two. For convenience in calculation, metric equivalents are expressed to two decimal places (nearest hundredth), wherever practical.

Source: https://assist.dla.mil -- Downloaded: 2017-02-09T05:28Z
Check the source to verify that this is the current version before use.

TABLE I. Standard English-metric equivalents

Volume:

1 fluid ounce	=	29.57 milliliters
1 pint	=	0.47 liter
1 quart	=	0.95 liter
1 gallon	=	3.79 liters
1 cubic foot	=	0.03 cubic meter

NOTE: To change cubic inches to cubic feet, divide by 1728.

Weight:

1 ounce (avoirdupois)	=	28.35 grams
1 pound (avoirdupois)	=	453.59 grams, 0.454 kilogram
2.2 pounds	=	1.00 kilogram

Length:

1 inch	=	2.54	centimeters, 25.4 millimeters
1 foot	=	30.48	centimeters, 0.305 meter
39.37 inches	=	1.00	meter
3.28 feet	=	1.00	meter
25.00 feet	=	7.625	meters
50.00 feet	=	15.25	meters

NOTE: Centimeters times 10 equals millimeters (cm X 10 = mm).

Temperature conversion:

To change degrees Celsius (C) to degrees Fahrenheit (F), multiply temperature by 1.8 and add 32 degrees F.

To change degrees Fahrenheit (F) to degrees Celsius (C), subtract 32 from the temperature and divide by 1.8.

Degrees Fahrenheit	=	Degrees Celsius
0		-18
32		0
212		100

Source: https://assist.dla.mil -- Downloaded: 2017-02-09T05:28Z
Check the source to verify that this is the current version before use.

TABLE II. MIL-STD-147 English-metric conversions

Volume (Liquid):

Gallons	=	Liters
1		3.79
5		18.95
30		113.70
55		208.45

Volume (Solid):

Cubic feet	=	Cubic meters
1.0		0.03
20.0		0.60
66.6		1.998

Pounds	=	Kilograms
1		0.454
10		4.54
15		6.81
32		14.53
45		20.43
100		45.40
120		54.48
250		113.50
900		408.6
2000		908.0
2500		1135.0
3000		1362.0
6000		2724.0
9000		4086.0

Inches	=	Centimeters
0.025		0.06
0.030		0.08
0.035		0.09
0.042		0.11
0.063	(1/16)	0.16
0.125	(1/8)	0.32
0.188	(3/16)	0.48
0.25	(1/4)	0.64
0.50	(1/2)	1.27
0.625	(5/8)	1.59
0.75	(3/4)	1.91
0.875	(7/8)	2.22
1.0		2.54
1.25		3.18
1.5		3.81
2.0		5.08
2.75		6.99
3.0		7.62
4.0		10.16
5.0		12.70
6.0		15.24
7.0		17.78
8.0		20.32
9.0		22.86
10.0		25.40
14.875		37.79
20.0		50.80
26.875		69.53
30.0		76.20
40.0		101.60
45.5		115.57
48.0		121.92
50.0		127.00
53.0		134.62
60.0		152.40

Source: https://assist.dla.mil -- Downloaded: 2017-02-09T05:28Z
Check the source to verify that this is the current version before use.

2. REFERENCED DOCUMENTS

(The documents cited in this section are for guidance and information.)

2.1 Government documents.

2.1.1 Specifications and standards. The following specifications and standards form a part of this document to the extent specified herein. Unless otherwise specified, the issues of these documents are those listed in the issue of the Department of Defense Index of Specifications and Standards (DODISS) and supplement thereto, cited in the solicitation.

SPECIFICATIONS

FEDERAL

L-P-378	- Plastic Sheet and Strip, Thin Gauge, Polyolefin
FF-N-105	- Nail, Brads, Staples & Spikes, Wire, Cut & Wrought
NN-P-71	- Pallets, Material Handling, Wood, Stringer Construction, 2-Way and 4-Way (Partial)
NN-P-530	- Plywood, Flat Panel
UU-P-268	- Paper, Kraft, Wrapping
CCC-C-428	- Cloth, Duck, Cotton, Fire, Water, Weather and Mildew Resistant
MMM-A-250	- Adhesive, Water-resistant (For Closure of Fiberboard Boxes)
MMM-A-260	- Adhesive, Water-resistant, (For Sealing Waterproofed Paper)
PPP-B-1055	- Barrier Material, Waterproofed Flexible
PPP-F-320	- Fiberboard, Corrugated and Solid, Sheet Stock (Container Grade), and Cut Shapes
PPP-T-76	- Tape, Pressure Sensitive Adhesive, Packaging/ paper (For Carton Sealing)

MILITARY

MIL-T-4	- Tire, Pneumatic, and Inner Tube, Pneumatic Tire, Tire With Flap, Packaging and Packing of
MIL-P-15011	- Pallets, Material Handling, Wood, Post Construction, 4-Way Entry
MIL-L-35078	- Load Unit Preparation of Semiperishable Subsistence Items, Clothing, Personal Equipment, and Equipage, General Specification for

Source: https://assist.dla.mil -- Downloaded: 2017-02-09T05:28Z
Check the source to verify that this is the current version before use.

STANDARDS

MILITARY

MIL-STD-129 - Marking for Shipment and Storage
MIL-STD-163 - Steel Mill Products Preparation for Shipment and Storage
MIL-STD-290 - Packaging of Petroleum and Related Products
MIL-STD-731 - Quality of Wood Members for Containers and Pallets
MIL-STD-1660 - Design Criteria for Ammunition Unit Loads

(Unless otherwise indicated, copies of Federal and military specifications, standards, and handbooks are available from the Naval Publications and Forms Center, ATTN: NPODS, 5801 Tabor Avenue, Philadelphia, PA 19120-5099.)

2.1.2 Other Government documents, drawings, and publications. The following other Government documents, drawings, and publications form a part of this document to the extent specified herein. Unless otherwise specified, the issues are those cited in the solicitation.

DEPARTMENT OF COMMERCE

US Product Standard (PS) PS-1, Construction and Industrial Plywood

(Application for copies should be addressed to the Superintendent of Documents, U.S. Government Printing Office, Washington, DC 20402.)

NORTH ATLANTIC TREATY ORGANIZATION (NATO)

STANAG 2828 MH - Military Pallets, Packages, and Containers

(Copies of Standardization Agreements (STANAGS) are available from the Department of Navy, Naval Publications and Forms Center, 5801 Tabor Avenue, Philadelphia, PA 19120.)

2.2 Non-Government publications. The following documents form a part of this document to the extent specified herein. Unless otherwise specified, the issues of the documents which are DOD adopted are those listed in the issue of the DODISS cited in the solicitation. Unless otherwise specified, the issues of documents not listed in the DODISS are the issues of the documents cited in the solicitation.

Source: https://assist.dla.mil -- Downloaded: 2017-02-09T05:28Z
Check the source to verify that this is the current version before use.

AMERICAN NATIONAL STANDARDS INSTITUTE (ANSI)

ANSI MH 1.1.2-79 - Pallet Definitions & Terminology

(Application for copies should be addressed to the American National Standards Institute, 1430 Broadway, New York, NY 10018.)

AMERICAN SOCIETY FOR TESTING AND MATERIALS (ASTM)

ASTM D-996 - Standard Terminology of Packaging and Distribution Environments

ASTM D-3950 - Standard Specification for Strapping, Plastic (and Seals)

ASTM D-3953 - Standard Specification for Strapping, Flat Steel (and Seals)

ASTM D-4675 - Standard Guide for Selection and Use of Flat Strapping Materials

(Application for copies should be addressed to the American Society for Testing and Materials, 1916 Race Street, Philadelphia, PA 19103.)

2.3 Order of precedence. In the event of a conflict between the text of this document and the references cited herein, the text of this document takes precedence. Nothing in this document, however, supersedes applicable laws and regulations unless a specific exemption has been obtained.

Source: https://assist.dla.mil -- Downloaded: 2017-02-09T05:28Z
Check the source to verify that this is the current version before use.

3. DEFINITIONS

General packaging definitions may be found in ASTM D-996 or in other referenced documents. Pallet definitions and terminology may be found in ANSI MH 1.1.2-79. For purposes of this standard, the following definitions shall apply:

3.1 Batten. A wooden member used to fill space, protect against damage, provide additional surface for strapping, or help create a stable load.

3.2 Bonding. The securing of units of material on a pallet to form a consolidated and stable load which itself can be handled as a unit.

3.2.1 Bonding methods (previously called "bonding means"). The methods used to secure units on and to a pallet to form a load.

3.3 Cap. A cover, with sides extending perpendicular from its perimeter, which is used to protect against damage or to help create a stable load. Made from canvas, fiberboard, wood, or plywood, a cap may be used over the load, inverted under a load, or used under or over intermediate layers.

3.4 Collar. An open frame, made of heavy wood, used to contain the upper perimeter of a load. It protects the tops of the units, prevents lateral motion of the unit, and provides a substantial base for superimposed loads.

3.5 Cross-ties or intersection seal. A 2-way seal applied to straps intersecting at right angles and crimped to prevent lateral movement of the straps.

3.6 Deck. The horizontal load-carrying or load-bearing surface of a pallet.

3.7 Edge protector. A light piece of metal, fiberboard, or other material used at the edge of a load to prevent damage by strapping.

3.8 End of load. The vertical surface of a load along the 40 inch length of the pallet.

3.9 Extra heavy weight units. Units weighing more than 45 pounds per cubic foot.

3.10 Frame. A wooden structure, consisting of wood or plywood sheathing, which is nailed to stringers and used to protect the

Source: https://assist.dla.mil -- Downloaded: 2017-02-09T05:28Z
Check the source to verify that this is the current version before use.

load or to help stabilize the load by containing, compacting, compressing, or supporting the units in the load.

3.10.1 Frame supports. Boards laid on the pallet deck under a load to carry the weight of the frame used with the load. A method of structuring corner board supports and stringers to the pallet to provide additional support for stacking pallets upon one another when the load will not support stacking by itself.

3.11 Glue. A water-resistant adhesive compound which will bond units to the pallet and to each other to prevent lateral movement, but which will permit their vertical removal at the point of use without damage to the container or its contents.

3.11.1 Glued load. A load bonded with glue or glued strips.

3.11.2 Glued strip. A piece of chipboard or newsboard, with glue applied to both sides, used to bond units to the pallet and to each other. Newsboard is paperboard made chiefly from repulped newspaper.

3.11.3 Glue stripe. Glue applied manually or mechanically to a pallet or container.

3.12 Heavy weight units. Units weighing over 32 pounds but not more than 45 pounds per cubic foot.

3.13 Interlocking pattern. An arrangement of units in successive layers, by which the units in one layer overlap the inner edges of units in the adjacent layers by 2 inches or more.

3.14 Layer (previously called "course"). A horizontal layer of units in a load.

3.15 Length of pallet. For this standard, the length is the 40-inch dimension of the pallet.

3.16 Lightweight units. Units weighing not more than 15 pounds per cubic foot.

3.17 Load. As used in this standard, "load" indicates a stable palletized unit.

3.17.1 Load (or pallet) pattern. The arrangement of layers on a pallet in such a manner as to use the greatest number of units within weight and dimension limits. Whenever possible, layers should interlock, and void spaces should be eliminated.

Source: https://assist.dla.mil -- Downloaded: 2017-02-09T05:28Z
Check the source to verify that this is the current version before use.

3.17.2 Load type. Units grouped according to the shape or the nature of the containers or of the material itself, and arranged in a pallet pattern which will permit the most effective use of bonding methods and storage aids.

3.18 Margin. The amount of pallet deck at the edge or edges of a load which is not covered by the load.

3.19 Medium weight units. Units weighing over 15 pounds but not more than 32 pounds per cubic foot.

3.20 MILVAN. A military-owned demountable, intermodal container used for containerization.

3.21 Narrow unit. A unit which has a base not greater than 6 by 6 inches square or 6 inches in diameter when stacked in the load.

3.22 Nested. Units in a load stacked within each other or arranged in diagonal rows to reduce unused space.

3.22.1 Nested packer. A container provided with interior partitions into which small units can be packed.

3.23 Overhang. That portion of the unit load exceeding the length or width dimension(s) of a pallet.

3.24 Pallet. A low, portable, horizontal platform device used as a base for assembling, storing, handling, and transporting materials and products in a unit load.

3.24.1 Pallet design. Construction of a pallet to allow for easy entry. The most common designs of wooden pallets are two- and four-way entry.

3.24.1.1 Four-way entry. This pallet design permits entry of handling equipment from four sides. A four-way pallet may be designed for partial four-way entry (also called notched stringer design) and full four-way entry (also called post design). Partial four-way entry allows four-way entry only with forklift trucks and two-way entry with hand pallet trucks, while full four-way entry allows four-way entry of both forklift and hand pallet trucks.

3.24.1.2 Two-way entry. This pallet design permits entry of fork or hand pallet trucks from two sides only and in opposite directions.

Source: https://assist.dla.mil -- Downloaded: 2017-02-09T05:28Z
Check the source to verify that this is the current version before use.

3.24.2 Pallet strips. Narrow lengths of light wood which are nailed to the pallet deck, or inside an inverted cap, to provide slots for the rigid positioning of vertical separators.

3.25 Palletized unit load. Quantity of any item, packed or unpacked, which is arranged on a pallet in a specified manner and securely strapped or fastened thereto so that the whole is handled as a single unit.

3.26 SEAVAN. A commercial- or Government-owned (or-leased) shipping container which is moved via ocean transportation without bogie wheels attached. It is similar in design to a MILVAN.

3.27 Separators, container. Strips of fiberboard used between empty containers when nested inside one another to prevent them from binding and making their separation difficult.

3.27.1 Separators, horizontal. Pieces of fiberboard or light wood placed between layers in a load to prevent damage to the units or to make a stable load.

3.27.2 Separators, vertical. Strips of fiberboard or light wood placed on edge between rows of units in alternate layers. The separators run crosswise and lengthwise on the pallet to form cells for the individual units and are used as a protection against damage to the units.

3.28 Sheathing. Boards or plywood strips nailed to the framework or stringers of caps and frames.

3.29 Shrink wrapping. A process of enclosing a load (usually pallet size) in a preformed polymer bag or polymer roll stock. With the application of heat, a reduction of the enclosure size occurs, thus creating a firm form fit around the load.

3.30 Side of the load. The vertical surface of a load along the 48 inch width of the pallet.

3.31 Spacer, notched. A piece of heavy lumber cut out across one face or opposing faces at regular intervals, which is placed underneath and between layers of horizontally stacked units. It protects the units against damage or makes a stable load by supporting the units.

3.32 Storage aids. Materials used to form a stable load by containment, compression, compaction, or support when bonding alone is insufficient. Also used as protection against damage to, or pilferage of, the material in the load.

Source: https://assist.dla.mil -- Downloaded: 2017-02-09T05:28Z
Check the source to verify that this is the current version before use.

3.33 Strap. A length of metal or nonmetallic material placed around a load to compact and bond the load under tension.

3.33.1 Strap, auxiliary. Any over-the-load strap, either tie-down or load, which is not a primary or secondary strap.

3.33.2 Strap, horizontal. A strap secured around the load parallel to the pallet deck.

3.33.3 Strap, load. An over-the-load strap which passes under the load but not under the pallet deck.

3.33.4 Strap, over-the-load. A strap which is secured on the top of the load, either a tie-down strap or a load strap.

3.33.5 Strap, tie-down. An over-the-load strap which passes under the pallet deck.

3.33.6 Straps, primary. The first two tie-down straps secured to a load passing over the load and under the pallet deck in the 40-inch direction inside the outboard pallet stringers.

3.33.7 Straps, secondary. The first two tie-down straps secured to a load passing over the load and under the pallet deck in the 48-inch direction and through the strapping slots in the stringers.

3.34 Strapped load. A load which is bonded to the pallet by the proper number and type of tie-down straps.

3.35 Strapped unit. A unit which has been bound by flat or round strapping.

3.36 Stretch wrap. The use of thermoplastic films having elastic properties that enable them to be stretched and sealed around small groups of products as well as pallet loads.

3.37 Stringer. A continuous longitudinal deck spacer.

3.38 Substantial unit (box). A unit or filled box which, with other like units, will form a stable load without additional storage aids.

3.39 Support load. A load which will safely support a minimum superimposed weight of 9,000 pounds or three loads of like material without rocking, buckling, listing, or causing damage to the material in the load.

Source: https://assist.dla.mil -- Downloaded: 2017-02-09T05:28Z
Check the source to verify that this is the current version before use.

3.40 Supports, separator. Boards of at least 1-inch nominal thickness used horizontally on edge to separate rows of units in a layer and to support the weight of superimposed pallet loads.

3.41 Supports, vertical. Boards of at least 1- by 4-inch nominal measurement applied vertically within corners of wood caps to prevent compaction of nested, tapered cans.

3.42 Top nesting units. Units with tops which have flared or raised rims and bottoms of such dimension that they may be placed or nested within the tops of like units for loading.

3.43 Underhang. That portion of the unit load less than the length or width dimension(s) of a pallet.

3.44 Unit. The container or item which forms a part of the load.

3.45 Unit load. An item or assemblage of items (in or out of a container) packed to be handled or transported as a single entity.

3.46 Unstable unit. A unit which will not form a stable load unless storage aids such as caps, trays, or frames are used in addition to bonding.

3.47 Vertical row. A column of units in a load, perpendicular to the pallet deck, which is not in an interlocking pattern.

3.48 Weight/volume categories of units. Weight/volume categories into which units have been divided in order to determine the bonding and storage aids to be used in forming stable loads.

3.49 Width of pallet. The horizontal dimension at right angles to the pallet length. For this standard, the width is the 48-inch dimension.

3.50 Wing pallet. A pallet whose decks protrude along two sides beyond the outer edges of the deck spacers.

Source: https://assist.dla.mil -- Downloaded: 2017-02-09T05:28Z
Check the source to verify that this is the current version before use.

4. GENERAL REQUIREMENTS

4.1 Abbreviations. The following authorized abbreviations are provided for information purposes only and shall not be misinterpreted by contractors for unit of issue abbreviations. The correct unit of issue for marking is the unit of issue shown in the contract or requisition. Abbreviations of the item descriptions will be permitted when approved by the cognizant activity concerned. Periods shall not be used with abbreviations.

a. Package units:

Assembly	AY	Key	KE	Pallet	PT
Carton	CT	Kit	KT	Piece	PC
Case	CS	Packaging	PG	Set	SE
Crate	CR	Pail	PL	Unit	UN

b. Quantitative units/expressions:

Bale	BE	Coil	CL	Pair	PR
Barrel	BL	Dozen	DZ	Reel	RL
Box	BX	Drum	DR	Roll	RO
Bundle	BD	Each	EA	Spool	SP
Can	CN	Hundred	HD	Thousand	MX

c. Weights and measure units:

Centimeter	cm	Inch	in	Ounce	oz
Cubic foot	cf	Kilogram	kg	Pint	pt
Cubic inch	ci	Kilometer	km	Pound	lb
Cubic meter	cm	Liter	li	Quart	qt
Foot	ft	Meter	mr	Square foot	sf
Gallon	gl	Milliliter	ml	Square inch	si
Gram	gm	Millimeter	mm	Square meter	sm

d. Miscellaneous abbreviations:

Ammunition	ammo	Mark	mk
Battery	btry	Military	mil
Copy	cy	Packed	pkd
Dimension	dmn	Pallet	plt
Engine	eng	Quantity	qty
Identification	ident	Report	rept
Invoice	inv	Requisition	rqn
Manufactured	mfd	Vehicle	ve

Source: https://assist.dla.mil -- Downloaded: 2017-02-09T05:28Z
Check the source to verify that this is the current version before use.

4.2 Formation of the load.

4.2.1 Load types. Loads are grouped into load types for the designation of bonding methods and storage aids.

4.2.2 Load size. Limitations on weights and dimensions have been established for uniform loads which meet the requirements of military and nonmilitary agencies and can be handled by existing materials handling equipment. Variations in load size shall not affect the standard pallet size of 40 by 48 inches.

4.2.3 Load patterns. Units of uniform size and content shall be loaded on the pallet in a pattern which will incorporate the greatest number practicable to effect maximum utilization of the area permitted by weight and dimension limits. The 124 load patterns shown in figure 51 of appendix B provide for efficient use of at least 80 percent of the 40- by 48-inch pallet surface and encompass containers ranging in size from 6 inches by 6 inches to 43 inches by 52 inches. These load patterns do not apply to ammunition, weapons, and components. To determine the proper load pattern number for containers of any size in the above range, refer to table III of appendix B.

4.2.4 Use of appendixes when forming the load. Units have been grouped into load types according to their physical characteristics for subsequent designation of bonding methods and application of storage aids. The various load types, bonding methods, and storage aids associated with palletized unit loads are discussed in detail in section 5. Each load type covers one or more types of units intended for formation into palletized loads by the applications listed in appendix A. All load types, bonding methods, and storage aids are listed in appendix A. In addition, appendix A contains a list of commodities or units and containers, with specific load types, bonding methods, and storage aids identified for use with each. The various combinations listed are not binding or mandatory but are recommended as the preferred bonding methods and storage aids to be used with the applicable commodities and load types. It should be stressed that the unitization method selected should be the one which makes the best use of available space in both the carrier and in storage. Bonding methods and storage aids listed in parentheses in 30.1 of appendix A are to be used to meet specific requirements, generally dictated by the physical nature of specific units or by the availability of the storage aid designated.

4.2.5 Wrapping. Canvas, paper, polyethylene (PE), polyvinyl chloride (PVC), and ethylene vinyl acetate (EVA) films may be used as wrapping to encase an entire load or part of a load as required.

Source: https://assist.dla.mil -- Downloaded: 2017-02-09T05:28Z
Check the source to verify that this is the current version before use.

4.2.6 Types of pallets (see figure 1, page 16).

4.2.6.1 NN-P-71. Types I (2-way entry), II, and III of NN-P-71 are intended for use in storage operations. Types IV and V of NN-P-71 are for use in storage and shipment worldwide regardless of mode of transportation.

4.2.6.2 MIL-P-15011. Type I (4-way entry) of MIL-P-15011 should be used for the palletization of military supplies whenever 4-way entry is required in the storage and distribution system and in support of NATO forces. Nonstandard 4-way entry 40- by 48-inch pallets should be reused for the storage and shipment of materiel to CONUS consignees. It should be noted that STANAG 2828 MH allows for the use of both 32- by 48-inch and 40- by 48-inch post construction pallets.

4.2.7 Lumber quality. Lumber used in the construction of palletized loads shall be well seasoned, commercially dry lumber, which shall also be free from decay, wanes, loose knots, knots that would interfere with nailing, and from other defects that would materially lessen its strength.

Source: https://assist.dla.mil -- Downloaded: 2017-02-09T05:28Z
Check the source to verify that this is the current version before use.

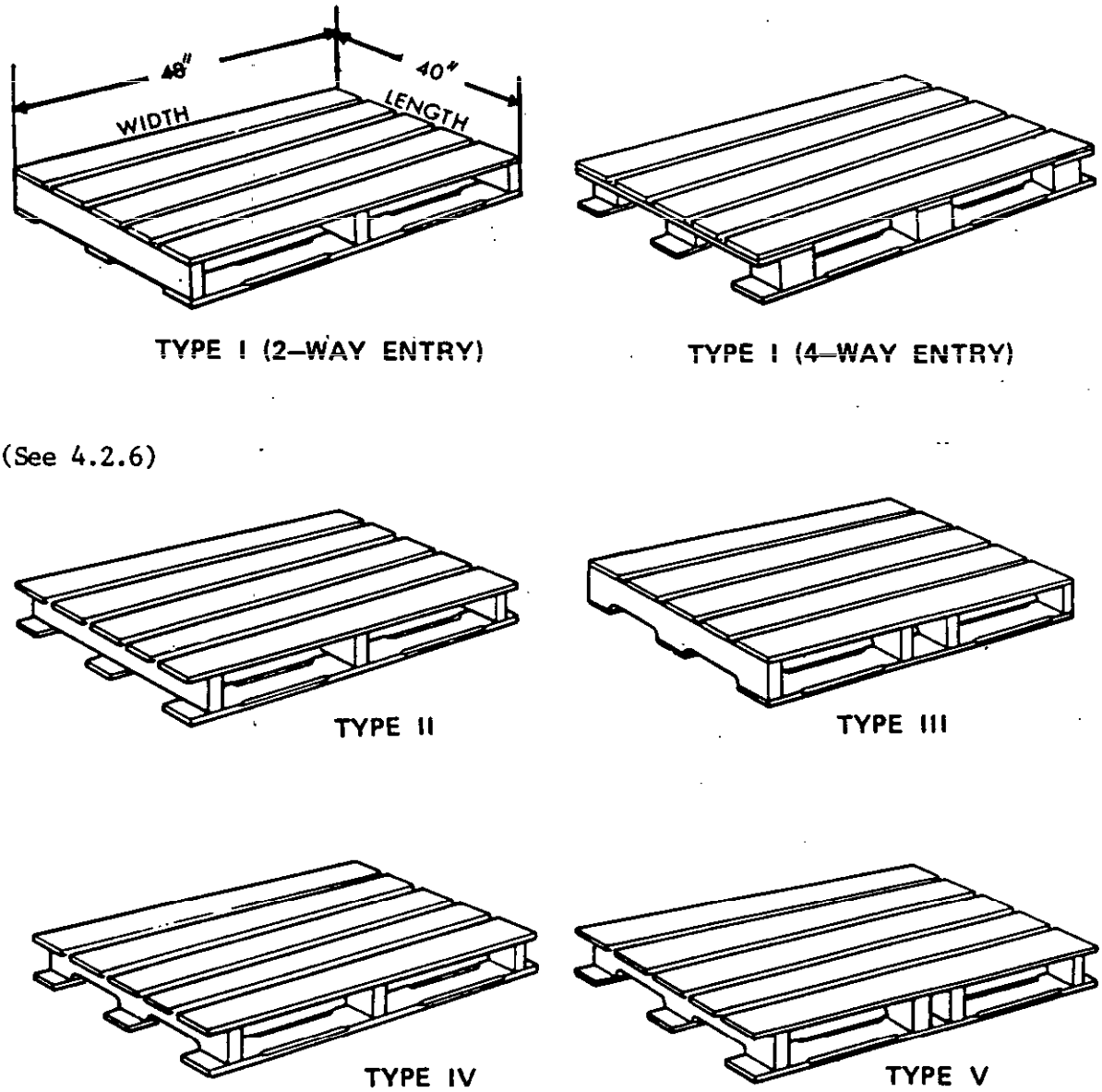

FIGURE 1. Types of pallets.

Source: https://assist.dla.mil -- Downloaded: 2017-02-09T05:28Z
Check the source to verify that this is the current version before use.

5. DETAILED REQUIREMENTS

5.1 Formation of the palletized load (see figures 2 and 3, page 41). Shipping containers in each palletized unit load shall be uniformly arranged in a load or pallet pattern as determined by table III and shown in figure 51 of appendix B. When the size of the individual shipping container does not fit any of the load patterns of table III, the proposed load pattern or request to use a different size pallet shall be submitted to the contracting officer for approval. This is only required when the contract calls for palletizing in accordance with MIL-STD-147; otherwise, this type deviation would not violate MIL-STD-147 requirements. The amount of materiel to be loaded on a pallet should exceed 250 pounds (excluding the pallet) or a volume of 20 cubic feet. The overall dimensions of palletized loads shall not exceed the applicable dimensions as shown. Shipping containers shall be stacked to form a compact squared load centered on the load base and shall be squared with all corners of the pallet. Overhang should be avoided because of containerization requirements. Uniform sized containers on a pallet for shipment should be stacked in a column and should have a sheet of paper or fiberboard placed between every other layer to increase load stability. Generally, 50-pound basis weight kraft paper is used for lightweight containers under 10 pounds. However, solid or corrugated fiberboard should be used for heavier containers. Shipping containers of type I loads, providing complete and uniform support to all faces of the shipping container, may be interlocked in a pallet load by reversing the patterns for each layer. Shipping containers of load types II and III should be column stacked on a pallet to provide greater stackability and supporting strength to the load. The top surface of the loading pallet must be level or made level for stacking purposes. This can be accomplished by applying a wooden top frame or leveling boards with supporting framework. Palletized loads for NATO forces shall be in accordance with 5.1.2.3. Whenever voids or gaps are created by equalizing container sides with the side or ends of the pallet, any spaces created shall be filled with an appropriately shaped storage aid (e.g., separator supports, chimney filler, etc.).

5.1.1 Palletized unit load size and weight. Dimensional and weight limitations apply to the complete load including pallet, bonding, and storage aids, and not merely to the stacked units.

5.1.1.1 Size (see figure 2, page 41). Unless otherwise specified by the procuring activity, unit loads prepared for shipment in SEAVANs, MILVANs, and passenger aircraft modified to transport cargo in the Civil Reserve Air Fleet (CRAF) shall not exceed 40 inches in length (end of load) and 48 inches in width (side of load). Unit loads prepared for shipment in SEAVANs shall not

Source: https://assist.dla.mil -- Downloaded: 2017-02-09T05:28Z
Check the source to verify that this is the current version before use.

exceed 43 inches in height and in MILVANs 41 inches in height when 2 pallet high stacking is desirable. The height of the pallets should be related directly to their stackability in the carrier. (NOTE: When palletizing ammunition for truck or MILVAN, unit loads shall not exceed 45 1/2 inches in one horizontal dimension.)

5.1.1.2 Weight limits. Weight limits apply to the entire load including the pallet, bonding methods, storage aids, and units. The maximum weight of a load for domestic, intercoastal, or overseas shipments shall not exceed 3,000 pounds per single pallet load. Shipments to NATO forces shall not exceed 2,500 pounds.

5.1.1.3 Decreasing weight of unit loads. When it is necessary to decrease the dimensions of a load in order to remain within the weight limitations, the height of the load will be decreased rather than decreasing its length or width.

5.1.2 Other palletized unit load sizes (see figure 3, page 41). This paragraph applies to unit load shipments that are not shipped by the containerization media or by CRAF. Unless otherwise specified, these unit loads shall not exceed 43 inches in length, 52 inches in width, and 54 inches in height.

5.1.2.1 Modular size unit loads. Unit loads of fiberboard modular sized containers conforming to the requirements in appendix C shall not exceed 41 inches in height for MILVAN and SEAVAN shipments to ensure compatibility with various vertical door openings. The length and width of the containers shall be as shown in appendix C, with no overhang permitted.

5.1.2.2 Pallet load sizes for Navy afloat units. Unit loads for delivery to Navy afloat units shall not exceed 40 inches in length when the unit containers are not fully supported internally. When unit containers are fully supported, unit loads shall not exceed 43 inches in length. This permits an overhang of 1 1/2 inches at each side of the pallet for fully supported unit containers (e.g., wood boxes, metal containers, etc.). In addition, the height of palletized unit loads for delivery to Navy afloat units shall not exceed 41 inches (not applicable to petroleum products).

5.1.2.3 Pallet load sizes for NATO forces. The MIL-P-15011 pallet shall be used for shipments of palletized loads to NATO forces. The outer dimensions of the load in principle should not exceed the outer dimension of the pallet base; however, the load may be permitted to exceed the outer pallet dimension by 1 1/2 inches on each side of the short dimension (40 inches) and by 2 inches on each end of the long dimension (48 inches). The maximum height and weight of the load shall not exceed 41 inches and 2,500

Source: https://assist.dla.mil -- Downloaded: 2017-02-09T05:28Z
Check the source to verify that this is the current version before use.

pounds, respectively. STANAG 2828 MH allows for the use of both 32- by 48-inch and 40- by 48-inch post construction pallets.

5.2 Load types. Wood used to fabricate caps, cornerposts, and separators for the various load types shall conform to the requirements of MIL-STD-731.

5.2.1 Load type I (see figure 4, page 42). Load type I consists of wood or metal boxes or other stable, hard surface units stacked in single or multiple layers.

5.2.1.1 Load type Ia (see figure 5, page 42). Load type Ia consists of fiberboard boxes stacked in single or multiple layers. Containers not fully supported internally shall not be permitted pallet overhang.

5.2.2 Load type II (see figure 6, page 42). Load type II consists of rectangular-shaped bales or bundles enclosed in paper or cloth stacked in single or multiple layers.

5.2.3 Load type III (see figure 7, page 43). Load type III consists of closed-head, top-nesting, cylindrical or rectangular cans, pails, or buckets stacked in multiple layers utilizing an inverted wood cap under the load and a wood cap over the load.

5.2.3.1 Load type IIIa (see figure 8, page 43). Load type IIIa consists of closed-head, top-nesting, cylindrical cans, pails, or buckets stacked in multiple layers for shrink- or stretch-wrap palletization. Wood caps should not be used with this type load. Shrink-wrap bonding shall be used for nonflammable loads only.

5.2.4 Load type IV (see figure 9, page 43). Load type IV consists of cylindrical or rectangular cans or pails with removable covers containing paints, plastics, and semiliquids (grease and lard) and non-top-nesting, closed-head cans stacked in multiple layers with wood caps between layers.

5.2.5 Load type V (see figure 10, page 44). Load type V consists of tapered empty containers without covers such as buckets and trash cans nested inside one another to form telescoped stacks. Units shall be internally nested one on top of another to form alternately inverted stacks and shall be placed on an inverted wood cap. Corner supports, cut approximately 1/4 of an inch shorter than the height of the stacks of nested units, shall be positioned accordingly, and a wood cap shall be placed over the units. The corner supports shall be nailed to the wood cap, with appropriate strapping applied. After tensioning, the corner supports shall be nailed to the inverted wood cap.

Source: https://assist.dla.mil -- Downloaded: 2017-02-09T05:28Z
Check the source to verify that this is the current version before use.

5.2.6 Load type VI (see figure 11, page 44). Load type VI consisting of units of flat paper stock or printed matter not encased in containers and rolls of cloth or fabric which require special weather protection shall be stacked in multiple layers, encased in a waterproof wrapping, and framed. An inverted wood cap shall also be placed under and over the load.

5.2.7 Load type VII (see figure 12, page 45). Load type VII consists of individual units of storage batteries or glass window lights that are isolated from superimposed loads by vertical wood separators arranged on the pallet in single layers with an inverted wood cap over and under the load. The height of each unit shall not exceed 11 inches. Units containing glass window lights shall be stacked in the load so that the glass is on edge.

5.2.8 Load type VIII (see figure 13, page 45). Load type VIII consists of rectangular units with irregular surfaces, nonuniform shapes, or nonlocking surfaces such as coffee cans which have double tray caps between layers and an inverted wood cap under the load and a wood cap over the load. Strapping is also used. Lightweight, metal, rectangular units may use fiberboard caps or horizontal fiberboard separators in lieu of a double tray cap.

5.2.9 Load type IX (see figure 14, page 46). Load type IX consisting of large cylinders for the containment of oxygen, freon, and other gases under pressure are arranged in a vertical unnested position on the pallet. A wood collar shall be used over the load, with battens placed around the bottom of the load with the lower edges resting on the pallet. Lumber shall be in nominal sizes.

5.2.10 Load type X (see figure 15, page 47). Load type X consists of cellular load formations such as cylindrical or rectangular cans containing welding electrodes which require separation of units to prevent damage caused by component contact. Units shall be arranged in a single layer of perpendicular rows, with vertical wood separators placed between the rows to create cells for each of the units. The load shall be framed on the sides, ends, and top.

5.2.11 Load type XI (see figure 16, page 47). Load type XI consists of flexible, thin material such as rope, wire, or hose wound or coiled on reels or spools which are arranged in multiple layers consisting of not less than two rows in each direction. A cap, top frame, or battens may be used. Some of the units may be placed on edge along the center line of the load if their dimensions do not permit placing them in the preferred position.

5.2.12 Load type XII (see figure 17, page 48). Load type XII consists of kegs arranged vertically in a single layer, with each

Source: https://assist.dla.mil -- Downloaded: 2017-02-09T05:28Z
Check the source to verify that this is the current version before use.

row in the layer staggered. A wood cap shall be inverted under the load, and one shall be placed over the load. When shipping 55-gallon drums (empty or full), there will be no more than 3 drums per pallet, except as designated in the Arctic Supply System.)

5.2.12.1 Load type XIIa (see figure 18, page 48). Load type XIIa consists of drums, kegs, or barrels arranged vertically in a single layer, with each row in the layer staggered and with an inverted wood cap on the bottom and a wood cap over the top of the layer. Internal dimensions of the tray and cap are approximately 41 by 46 inches, and it is to be placed on the pallet with the 46-inch side arranged along the 48-inch dimension of the pallet.

5.2.12.2 Load type XIIb (see figure 19, page 49). Load type XIIb consists of drums, kegs, or barrels, arranged vertically in a single layer with each row staggered, but without caps. Shrink-wrap bonding may be used when the load is nonflammable. If the load is flammable, use load type XIIa. Stretch-wrap bonding may also be used for lightweight loads. When stretch wrap is used, horizontal fiberboard separators should also be used to increase the load-bearing area.

5.2.13 Load type XIII (see figure 20, page 49). Load type XIII consists of cylindrical shaped items in rolls such as wire, cloth, canvas, wrapping paper, and sheet metal which are stacked vertically in single or multiple layers. When kegs and small drums are stacked in multiple layers, the unit will have a wood cap over and under the load and a double tray wood cap between layers.

5.2.14 Load type XIV (see figure 21, page 50). Load type XIV consists of small units, not normally in overpack containers but capable of supporting superimposed loads, which are packed in a fiberboard nested packer.

5.2.15 Load type XV (see figure 22, page 50). Load type XV consists of units in cloth bags, plain paper bags, or lined paper bags which are arranged in interlocking layers. Lined paper bags or multiwall paper bags will generally require compression for bonding purposes. Fiberboard sheets should be placed on the deck of the pallet to prevent material such as flour or sugar from shifting through the slots. Shrink- or stretch-wrap bonding may be used with this type load.

5.2.16 Load type XVI (see figure 23, page 51). Load type XVI consists of units of great value or extreme fragility, or items of irregular shape which cannot in themselves be formed into a stable load when overpacking is required to preclude pilferage or damage. These items may be packed in sectional pallet boxes.

Source: https://assist.dla.mil -- Downloaded: 2017-02-09T05:28Z
Check the source to verify that this is the current version before use.

5.2.17 Load type XVII (see figure 24, page 51). Load type XVII consists of units not overpacked such as narrow and short drums and cans, small gas cylinders, hand fire extinguishers, and unstable units such as bags stacked on a long edge. These units shall be made up in framed loads.

5.2.18 Load type XVIII (see figure 25, page 51). Load type XVIII consists of minimum framed pallets to be used for loads that are not normally capable of supporting superimposed loads caused by the stacking of pallets in the normal depot fashion of 3 or 4 pallets high. The wood frame will be set on top of the deck of the pallet even with the outside of the perimeter.

5.3 Bonding methods.

5.3.1 Glue bonding. Glue bonding methods A (glue stripes) and B (glued strips), as applicable to load type I, shall be used only when specified by the procuring activity. Bonding methods A and B may be used by themselves or in combination with other bonding methods when forming palletized unit loads. Glue bonding shall not be used with bagged material, metal containers, non-capped loads of substantial wooden boxes, or any load having both primary and secondary tie-down straps. Bonding with glue stripes shall be made on unstrapped fiberboard containers. The adhesive should set in approximately 10 minutes, binding the containers together, and, when unloaded at the destination, the containers should pull apart without disfiguring or tearing the fiber surfaces of the boxes. Bonding methods A and B may be accomplished with commercially available glue dispensing equipment. Although various types of adhesives may be used (e.g., MMM-A-250, MMM-A-260, or commercial equivalent), they must perform as specified herein. Use bonding methods A and B only in loads when filled, lined paper bags can be compacted and are to be glued. When glue is not used for such units, horizontal straps, tie-down straps, canvas covers, and battens shall be employed.

5.3.1.1 Glue bonding method A (glue stripes) (see figure 26, page 52). Glue bonding method A consists of three glue stripes half an inch in width evenly spaced, running the full length of each unit. In mechanical application, the glue stripes shall be applied to the bottom surface by a power driven glue wheel applicator. In manual application, nine glue spots, approximately 3 inches in diameter and evenly spaced, shall be heavily brushed on the top deck boards of the pallet prior to formation of glued loads. When mechanical glue application is not available, gluing may be done manually with a small paint brush. Three stripes shall be required for fiberboard boxes, fiberboard containers, etc.

Source: https://assist.dla.mil -- Downloaded: 2017-02-09T05:28Z
Check the source to verify that this is the current version before use.

5.3.1.2 Glue bonding method B (glued strips) (see figure 27, page 52). Glued strips consist of chipboard or newsboard not less than 0.03 inch thick, 4 inches wide, and 20 to 24 inches long, coated uniformly on both sides with glue applied either manually or mechanically. Glued strips shall provide an adequate bonding surface for the bonding of loads of rectangular nonmetal units which have cleats, nails, staples, straps, or even tops or bottoms. Glued strips shall be applied to the pallet deck and to the top of each layer of a load before the next layer is positioned. At least six strips shall be placed around the perimeter of the load at each level of application in conjunction with four strips placed within the perimeter to form an "X." This will allow the strips to effectively contact every unit in the adjacent layers.

5.3.2 Strapping. Strapping shall be metallic or nonmetallic as specified in 5.3.2.1 and 5.3.2.2, respectively. Guidance on the selection and use of flat strapping materials, both flat carbon steel and plastic, is contained in ASTM D-4675.

5.3.2.1 Metallic strapping. Metallic strapping shall be flat steel conforming to the appropriate type and finish of ASTM D-3953. Breaking strength of the strapping shall be as shown in the ASTM. Straps shall be held in tension on the load by double crimped steel seals of a size suited to the flat steel strapping used or of a type approved by the procurement agency.

5.3.2.2 Nonmetallic strapping. Nonmetallic strapping shall conform to the appropriate type and grade of ASTM D-3950. Unless otherwise specified in the ordering data or by the procuring activity, nonmetallic strapping is not authorized for the strapping of palletized loads of plywood or metal shipping containers. Strapping seals shall be as specified in ASTM D-3950.

5.3.2.3 Determination of strap size.

5.3.2.3.1 Tie-down strap size. The gross weight of a load divided by the total number of tie-down straps to be used determines the weight which must be borne by each strap. This weight is compared with strap capacities listed in ASTMs D-3950 or D-3953. Strapping having the same or next higher capacity must be used.

5.3.2.3.2 Horizontal strap size. The gross weight of the layer compared with strap capacities listed in ASTMs D-3950 or D-3953 determines the strapping size required. Horizontal straps used in conjunction with tie-down straps will be the same size as the tie-down straps.

Source: https://assist.dla.mil -- Downloaded: 2017-02-09T05:28Z
Check the source to verify that this is the current version before use.

5.3.2.4 Securing straps. All metallic and nonmetallic straps applied to a load shall be applied straight and shall be tensioned equally to a degree that precludes looseness on the side or top of the load and prevents excess strain on some straps that may cause looseness or breaking during handling and shipment. Straps will be held in tension by appropriate seals.

5.3.2.4.1 Sequence of securing straps. When straps are used in combinations, they should be secured in proper sequence to acquire and maintain a stable load. Horizontal straps must always be secured first, beginning with the lowest one of the load and working upward. Primary and secondary straps are next to be secured. When both are used, the strap which spans the greatest number of units shall be secured first, followed by one strap positioned at right angles to the first. Next, the strap paralleling the second strap shall be secured. Auxiliary straps will be secured last.

5.3.2.4.2 Edge protectors. Metallic edge protectors shall be a one piece sheet of strip steel pickled and oiled having a minimum gauge of 0.042 inch, a minimum width of 2 3/4 inches, and a minimum leg length of 2 inches. Nonmetallic edge protectors (e.g., fiberboard, plastic, etc.) shall be selected based on the size, weight, and configuration of the load. Fiberboard edge protectors shall be of weather resistant, double-faced, corrugated fiberboard, minimum 3 inches square, with or without a center score line. Although there are no restrictions on the types of plastic edge protectors to be used, they must provide the same degree of protection as other nonmetallic edge protectors. Edge protectors are to be used in conjunction with straps at corners or edges of containers.

5.3.2.4.3 Cross-ties or intersection seals (see figure 6, page 42). Straps applied to a load at right angles to each other and in the same plane (vertical and horizontal) shall be prevented from lateral movement and displacement by the application of cross-ties or intersection seals of a size appropriate for the strapping used.

5.3.3 Strap bonding methods.

5.3.3.1 Bonding method C (horizontal straps) (see figures 28 through 34, pages 53-56). Except for shrink- and stretch-wrap bonded loads, horizontal straps may be used around virtually all other loads, from glued loads of rectangular units to framed loads which are capped by a top frame. The type and position of horizontal straps will vary depending on the load type. Horizontal straps may be placed around a load as follows: top layer or single layer, each layer, each layer except the top, bottom of a framed load outside the frame, top of a framed load outside the frame, center of a framed load outside the frame, and one strap at the

Source: https://assist.dla.mil -- Downloaded: 2017-02-09T05:28Z
Check the source to verify that this is the current version before use.

bottom of a load of compressed gas cylinders outside the battens. Figures 28 through 34 illustrate the various types of horizontal straps used with different load types. These illustrations are for guidance only. When palletizing a load, various situations or problems may arise which might affect the number and placement of the various horizontal straps to be used. Therefore, actual load configurations may vary from those illustrated herein.

NOTES: 1. For load type II, use a horizontal strap around each layer when under-strap battens are required to stabilize bales or bundles.

2. For load types III and IIIa, use a horizontal strap around each layer except the top layer for wood-capped loads of nesting, cylindrical units. Position the strap just below the tops of units in each layer except for the top layer.

3. For load types VII and VIII, use a horizontal strap around the center of all multiple-layer, framed loads and all single-layer, framed loads which exceed 30 inches in height.

4. For load type VIII, use horizontal straps around each layer in noncapped, multiple-layer loads in conjunction with horizontal fiberboard separators or cross-strap battens.

5. For load type XV, use a horizontal strap around the top layer or single layer of a load of substantial cloth bags made of a material which will not be damaged by straps or edge protectors.

6. For load type XVII, use a horizontal strap around the center of multiple- and single-layer, framed loads which exceed 30 inches in height. Use a horizontal strap around the top of framed loads when the top frame is used in lieu of a wood cap over the top of the load.

5.3.3.2 Bonding method D (tie-down straps) (see figure 35, page 56). There are three types of tie-down straps: primary, secondary, and auxiliary (see 3.33.6, 3.33.7, and 3.33.1, respectively, for definitions). Primary straps pass under the pallet deck in the 40-inch direction, while secondary straps pass under the pallet deck in the 48-inch direction. Primary and secondary straps are the first two tie-down straps secured to a load; auxiliary straps are the third and subsequent straps added to secure the load. Primary straps are used on all loads except glued loads intended for

Source: https://assist.dla.mil -- Downloaded: 2017-02-09T05:28Z
Check the source to verify that this is the current version before use.

domestic shipment. When primary straps are used with edge protectors, they are positioned so the edge protectors will bridge two rows of units, if practicable, to create integral bonding. Secondary straps are used on all loads except glued loads of compressed gas cylinders intended for domestic shipment. Auxiliary tie-down straps will be used with all framed loads, capped loads, and loads of reels, spools, coils, or rolls with three or more units in width. Auxiliary straps will be positioned over the load and under the pallet deck boards in the 40-inch direction and will be evenly spaced. When used with noncapped, nonglued loads, auxiliary straps will be positioned at the horizontal center of each row in excess of two.

NOTES: 1. For load type VIII, use auxiliary tie-down straps on capped loads of bricks, refractories, or similar material made up of heavy individual items in smaller rectangular unit packages, and on noncapped loads of medium through extra heavy rectangular units bonded with cross-strap (vertical) battens.

2. For load type IX, use secondary tie-down straps with loads of cylinders for overseas shipments but not for such loads intended for domestic shipment only. Also, use auxiliary tie-down straps with both domestic and overseas loads containing only oxygen cylinders.

3. For load type XI, use auxiliary tie-down straps with large rolls or reels of barbed wire and other material on reels, spools, or rolls not contained in an overpack when such units stack more than two units wide in the 48-inch direction of the load.

4. For load type XIIa, use both primary and secondary tie-down straps in conjunction with wood caps for loads of 55-gallon drums or barrels.

5. For load type XV, use both primary and secondary tie-down straps with all loads of bagged material with canvas covers.

5.3.3.3 Bonding method E (load straps, auxiliary) (see figure 36, page 57). Load straps secure only the load because they pass under the load but not under the pallet deck. They are used with framed, capped, or noncapped loads. When noncapped, nonglued loads contain more than two rows of units in both directions, with the greater number of rows in the 40-inch direction, load straps will be used in the 48-inch direction over the intermediate rows. As stated above, they may be used when the pallet stringers preclude

Source: https://assist.dla.mil -- Downloaded: 2017-02-09T05:28Z
Check the source to verify that this is the current version before use.

the use of auxiliary tie-down straps. The specified number of load straps will be positioned on the pallet deck in the proper direction with the ends of the strapping free. The load is then stacked on the pallet, and the straps are drawn over the complete load, tensioned in proper sequence, and secured with strapping seals. Use auxiliary load straps on load type I loads containing units of dry packaged or unpackaged storage batteries, small glass window lights, or similar heavy units in substantial wood boxes, or use the straps with crates as needed to stabilize the load. In these type loads, the applicable strap(s) will be placed in the one lateral direction which spans the intermediate row(s) containing the greater number of units. If the same number of units are positioned both ways, use these straps only one way.

5.3.4 Shrink- and stretch-wrap bonding.

5.3.4.1 Bonding method F (shrink wrap) (see figure 37, page 57). Shrink-wrap bonding is appropriate for all commodities except ammunition; nuclear explosives; petroleum, oil, and lubricants (POL); and other flammable materials. PE shrink wrap for use in pallet load bonding shall conform to type IV, class 3, grade A, finish 1, of L-P-378. The film will be a bag encapsulated over the entire load and will extend at least evenly with the underside of the bottom deck board of the pallet. Unless otherwise specified, wing-type pallets, conforming to NN-P-71 and MIL-P-15011, must be used in order to properly anchor the load to the pallet. For example, pallet types I and III of NN-P-71 are flush-type pallets (without wings) and are not as suitable as wing-type pallets (types II, IV, and V of NN-P-71 and type I of MIL-P-15011) for anchoring the load to the pallet when either shrink wrap or stretch wrap is applied. Thermoplastic films of 6-mil PE or 2.5-mil PVC are acceptable for loads up to 2,000 pounds. Loads from 2,000 to 3,000 pounds need a PE film of 8-mil thickness or a PVC film of 4-mil thickness.

5.3.4.2 Bonding method G (stretch wrap) (see figure 38, page 58). Stretch wrap is appropriate for all commodities and types of palletized loads of materiel shipped in the continental United States (CONUS) or when shipped containerized. When specified, variations in size and type of pallets shall be permitted for CONUS shipments only. As described in the previous paragraph, wing-type pallets must be used in order to properly anchor the load to the pallet. Stretch wrap shall be clear, extruded PE, 0.9 mil minimum thickness, or when specified, pigmented or tinted; PVC; or EVA, 0.8 mil minimum thickness. Multiwraps of PE shall add up to a minimum of 2.7 mils thickness, prior to wrapping, on loads up to 1,000 pounds, 4.5 mils thickness on loads up to 2,000 pounds, and 5.6 mils thickness on loads up to 3,000 pounds. When using PVC or EVA film, a minimum thickness of 1.6 mils is required for loads up to

Source: https://assist.dla.mil -- Downloaded: 2017-02-09T05:28Z
Check the source to verify that this is the current version before use.

1,000 pounds, 2.4 mils thickness for loads up to 2,000 pounds, and 3.2 mils thickness for loads up to 3,000 pounds. Film shall be wrapped around the load in multiple wraps, either by the spiral, full wrap method or by the push-through method. Wrap the load from the top of the bottom deckboard to not less than 2 inches above the height of the load. To provide additional protection, a sheet of weather-resistant fiberboard or plastic film, the same size as the perimeter of the load, shall be placed on top of the load prior to wrapping. When handheld, stretch-wrap equipment is used, ensure that a uniform tension exists throughout the load.

5.4 Storage aids. Storage aids shall always be used when bonding alone is insufficient or when the containers require protection from bonding methods. Storage aids are constructed of paper, wood, PE sheet, canvas, fiberboard, steel, or other materials. Storage aids constructed of wood shall be made of lightweight material consistent with the type of protection required.

5.4.1 Metallic edge protectors (storage aid 1) (see figure 33, page 55). In order to add structural stength, metallic edge protectors shall be used at the edges of crates fabricated from light wood, at intersections of side and top frames, and under a strap crossing the long edge of substantially constructed wood boxes containing breakable material such as glass in noncapped loads. If the use of edge protectors directly applied to units of cloth, paper, or other fragile material could result in damage, battens shall be substituted for edge protectors. Metallic edge protectors should not be used with nonmetallic strappings.

NOTE: This note applies to load types I, II, VI, VII, VIII, XIII, XV, and XVII. Do not use storage aid 1 at edges of wood boxes, except for noncapped loads of glass window lights as described above; on battened gas cylinders, wood caps, and collars; or at the pallet deck where margin exists. Also, do not use on loads with cloth or paper units when battens are utilized. Use on noncapped loads with cartons, crates with thin slats, framed loads where two frames meet, and on nonbattened loads of bales when such application will not damage the material.

5.4.2 Nonmetallic edge protectors (storage aid 2) (see figure 28, page 53). Nonmetallic edge protectors shall be used under horizontal straps on loads to protect against damage to the finish on the units and to provide a compressible base for tensioning each strap to preclude slipping. These type protectors shall be placed under each horizontal strap at points adjacent to the corners of the pallet after the strap has been positioned but before it is tensioned. Fiberboard edge protectors shall consist of narrow

Source: https://assist.dla.mil -- Downloaded: 2017-02-09T05:28Z
Check the source to verify that this is the current version before use.

strips of double-faced, corrugated fiberboard (CF) folded in the middle to form a 90 degree angle. Other nonmetallic edge protectors are authorized, but they must provide the required protection.

5.4.3 Caps. Caps shall be used over, or under and over, loads when required for the creation of stable loads or for protection, containment, compression, or compaction of the units in the load.

5.4.3.1 Canvas cap (storage aid 3). This cap shall be made from cotton duck cloth, which is fire, water, weather, and mildew resistant in accordance with CCC-C-428. Canvas, 60 inches in width, is preferable to preclude splicing and shall be prepared to the size of the load for which it is intended. The cap shall cover the load and extend down on the sides and ends to a point at least halfway down the top layer. The load shall then be subjected to a superimposed weight of 6,000 pounds or 3 loads of like material, whichever is lesser, after which the sides of the cap shall be pulled down tightly and secured with a horizontal strap around the top layer over the canvas. Kraft paper conforming to UU-P-268 may be substituted for the canvas.

5.4.3.2 Fiberboard cap (storage aid 4) (see figure 39, page 58). This cap shall be made from a piece of solid fiberboard (SF) or CF conforming to PPP-F-320, class weather-resistant, and shall be creased with corners cut to form the top. It will be prepared to fit its intended load. This cap shall be used with nonglued loads of lightweight rectangular units to hold the units securely and to preclude lateral movement. These caps may be used in pairs, with one over the load and one under the load or one over and one under each layer. The depth of the cap can be extended up to 12 inches for loads such as boxed wire fabric which require more stability.

NOTE: For load type VIII, use storage aid 4 under and over each layer in loads of lightweight, rectangular units. Do not use in loads utilizing sectional pallet boxes or in lieu of wood caps over the top and bottom of loads, intermediate wood caps, or cross-strap battens for units heavier than lightweight.

5.4.3.3 Wood cap (storage aid 5) (see figure 40, page 59). Wood caps shall be of the open sheathing type except when specified by the procuring activity. Closed sheathing wood caps shall be used for loads of cloth or paper which require special protection. The outside dimensions of the wood cap shall not be less than the dimensions of the pallet unless otherwise specified and shall never exceed outside dimensions of 43 inches by 52 inches when providing for an allowable overhang. When the dimensions of the unit load are less than the wood cap, the space between the load and the

Source: https://assist.dla.mil -- Downloaded: 2017-02-09T05:28Z
Check the source to verify that this is the current version before use.

inside of the wood cap shall be blocked as necessary to prevent shifting of containers when pallets are impacted. The end and side slats of wood caps shall be not less than nominal 1- by 4-inch lumber secured at each end with two 8d cement-coated nails. Corner straps shall conform to ASTM D-3953 and shall extend a minimum of 6 inches on the end and side slats. Corner straps shall be secured to the slats with a minimum of 6 nails (3 per slat) clinched not less than a quarter of an inch. Sheathing for open type wood caps shall be not less than nominal 1- by 4-inch lumber spaced not more than 2 inches apart. Unless otherwise specified, lumber for slats and sheathing shall conform to group II, III, or IV of MIL-STD-731. Sheathing for closed-type wood caps shall be not less than 1/2-inch plywood conforming to NN-P-530, PS-1, grade C-D, interior with exterior glue, or PS-51, grade 3 or 4, type I. Sheathing shall be secured to side and end slats with 8d cement-coated nails, conforming to FF-N-105, spaced not more than 3 inches on center, with no less than 2 nails used per sheathing board. Wood caps may be used with framed or unframed loads and may be used over, or over and under a load. When used under a load, the cap is inverted on the pallet and the first layer of units is arranged therein. When a closed sheathing-type wood cap is used under the load, drainage holes half an inch in diameter shall be drilled in the wood cap over spacing in the deck boards of the pallet located in a manner to ensure drainage. When wood caps are used with a framed load, the bottoms of the side frames shall be enclosed in the inverted cap. When used to cover a framed load, the cap shall be made to enclose the top of the side frame. Dry packed or unpacked storage batteries, glass window lights, or similar material in cartons or nonsubstantial containers will be capped under and over the load.

NOTES: 1. For load types III, VI, VII, XII, and XIIa, use storage aid 5 under and over the load. (Not required if stretch-wrap bonding is used.)

2. For load type V, use storage aid 5 over the load only.

3. For load type VIII, use storage aid 5 under and over the load when double tray caps are used intermediately in multiple-layer loads; when loads of brick, refractories, or similar material in multiple- or single-layer loads are utilized; and when single-layer loads contain tapered units which are heavier than lightweight. Do not use storage aid 5 on load type VIII loads when units are lightweight or are of medium to extra heavy weight in multiple layers when cross- and under-strap battens are employed.

4. For load type XI, a wood cap may be used in lieu of top battens to facilitate placement of over-the-load straps.

Source: https://assist.dla.mil -- Downloaded: 2017-02-09T05:28Z
Check the source to verify that this is the current version before use.

5. For load type XIII, do not use storage aid 5 over, under, or intermediately in loads utilizing sectional pallet boxes or nested packers.

6. For load type XVII, top frames should be used. If they cannot be used, use storage aid 5. Use inverted wood caps under all loads except those which stack with margin on pallet and those whose units will remain stacked without aid while the load is completed. In addition, use between layers, over the lower layers, and in framed loads of metal or metal encased units, except when horizontal wood or plywood separators can be utilized or when notched wood spacers are required.

5.4.3.4 Tray caps (storage aid 6) (see figure 41, page 60). Tray caps shall be of the open or closed sheathing type, with two longitudinal partitions which serve to separate the rows of units in a layer to prevent damage around the top edges of the units. Tray caps shall be fabricated in accordance with wood cap requirements (see 5.4.3.3) and shall be modified by the addition of two longitudinal partitions of not less than nominal 1- by 4-inch lumber. These partitions shall be secured to the sheathing and slats with 8d cement-coated nails spaced not more than 3 inches on center, with no less than two nails used per sheathing board. For load type IV, a tray cap shall be used to cover each layer of units in the load, including the top layer, when loading 5-gallon pails with removable covers such as paint pails.

5.4.3.5 Double tray cap (storage aid 7) (see figure 42, page 60). This cap shall be fabricated in accordance with requirements for open sheathing wood caps (see 5.4.3.3) except that the slats shall extend equally in both perpendicular directions from the sheathing to enclose the top of the units in one layer and the bottoms in another. The sheathing shall be secured to the bottom cleat prior to securing the top cleat. Cleats shall be not less than nominal 1-inch lumber and secured to the slats with cement-coated nails clinched a minimum of a quarter of an inch and spaced not less than 3 inches on center. Strapping shall conform to ASTM D-3953. It shall be centered on the slats around the entire perimeter of the cap and shall be secured to the slats with a minimum of eight staples conforming to FF-N-105. Staples shall be spaced 6 to 8 inches from each corner. Lumber shall be in accordance with MIL-STD-731. For load types VIII and XIII, use double tray caps between layers only with loads which have multiple layers and are capped over the top and under the bottom with wood caps.

5.4.4 Canvas cover (storage aid 8). This cover shall consist of a piece of canvas large enough to cover at least the upper

Source: https://assist.dla.mil -- Downloaded: 2017-02-09T05:28Z
Check the source to verify that this is the current version before use.

two-thirds of the load. It differs from the canvas cap by having much longer sides. This cover shall meet the requirements of CCC-C-428. The canvas cover shall be used with loads of plain paper bags and loads of cloth bags to protect against damage to bags or contained material. The cover shall be placed over the load, centered, and folded down around the sides. The load shall be subjected to a superimposed weight of at least 6,000 pounds, or three loads of like material, whichever is lesser, after which the cover shall be pulled down tightly at the sides of the load and secured by horizontal straps. Kraft paper, conforming to UU-P-268, may be substituted for the canvas. A canvas cover shall be used with load type XV units such as lined or plain paper bags which could be damaged by strapping or edge protectors. When using a canvas cover for this type load, battens should be placed over or under the load. Two battens should be placed horizontally at each side of the load to form two layers or tiers of battens around the load. The load should then be secured with horizontal straps placed around each layer in conjunction with the required number of primary and secondary tie-down straps.

5.4.5 Waterproof wrapping (storage aid 9). Waterproof wrapping shall consist of two pieces of duplex, asphaltic-laminated, waterproof paper per load, conforming to PPP-B-1055. Each piece of paper shall cover the top of the load and shall fold around the sides to enwrap at least two-thirds of the load. This wrapping shall be used with framed loads of horizontally stacked, cylindrical units of fabric and with loads of flat, paper stock or printed matter not contained in cartons or boxes provided with inside waterproof protection. The wrapping shall be positioned outside all the units in the load and inside the frames. One piece of paper shall be placed in an empty inverted wood cap on a pallet, with the units of the first layer arranged in the cap on the paper and other layers added until the load is stacked within its limitations. Then the paper shall be folded up tightly around the sides of the load and secured with waterproof tape conforming to PPP-T-76 or water-resistant adhesive conforming to MMM-A-260. The other piece of paper shall then be placed over the load, folded down tightly around the sides of the load, and secured with waterproof tape or water-resistant adhesive, as described above. All spliced seams must be sealed in a like manner. The load is then framed, capped, and strapped. Loads of non-boxed horizontally stacked rolls or cylindrical units of fabric are handled differently. After the first layer of units has been arranged in the inverted wood cap on the paper, the paper shall be folded in over the load and two opposing side frames, set inside the inverted cap, and shall be secured temporarily in a vertical position. The paper shall then be folded out to the frames, and the remainer of the load shall be stacked.

Source: https://assist.dla.mil -- Downloaded: 2017-02-09T05:28Z
Check the source to verify that this is the current version before use.

5.4.6 Frames (see figure 43, page 61). Frames shall be used to protect the load or to help make a stable load by containing, compacting, compressing, or supporting the units in the load.

5.4.6.1 Side frames (storage aid 10). Side frames shall be prepared to size for the load. They shall be constructed of not less than nominal 1- by 4-inch lumber conforming to MIL-STD-731 or half-inch plywood conforming to PS-1, grade C-D, interior with exterior glue. The intermediate stringer may be applied diagonally when racking must be prevented to make a stable load. When the load contains compressible or compactible materiel, the frame dimensions shall be less than the corresponding dimensions of the unsecured load by an amount which will allow for compression or compaction so that the framed load will be stable when strapped. When the load is bonded and frames are used on all four sides of the load, frames in the 48-inch direction shall overlap those in the 40-inch direction. Side frames shall be used on all sides of the following loads: unstable or odd-shaped units; flat paper stock or printed matter (except when in waterproof cartons or boxes); cylindrical units stacked horizontally; side-rimmed cylindrical units or units which are narrow and short; and plastic-type containers requiring protection from superimposed loads and racking during storage and shipment. A top frame or wood cap over the load shall be used in conjunction with side frames in the aforementioned loads. For loads of glass window lights or storage batteries which exceed 11 inches in height and are not encased in substantial wood boxes, side frames will be used only at the ends. The frames shall be positioned around the load with the bottom edges inside the inverted wood cap, when used, so that the weight of the frames rests upon the wood caps, the frame supports, or the pallet deck. When used with loads of cylindrical units stacked horizontally, two opposing side frames shall be placed along the length of the units with the bottom edges inside the wood cap, and they shall be temporarily braced in a vertical position to prevent movement of the units while the load is being completed.

NOTES: 1. For load type VII, use side frames at the 40-inch ends of the load only in conjunction with separator supports. Also, use side frames intermediately in this type load when the overall height of the units in the load exceeds 11 inches.

2. For load type VIII, use side frames on four sides of a load of noncontained fiberboard sheets.

5.4.6.2 Top frame (storage aid 11). The top frame shall be constructed in the same manner as the side frames and shall be built to size for the load for which it is intended and shall overlap

Source: https://assist.dla.mil -- Downloaded: 2017-02-09T05:28Z
Check the source to verify that this is the current version before use.

the side frames when the load is bonded. When used with loads of compressible or compactible materiel, the dimensions of the top frame shall be less than the corresponding dimensions of the unsecured load by an amount which will allow for compression or compaction so that the framed load will be stable when strapped. A top frame shall be used to reduce weight with any framed load which does not require the heavier wood cap. The top frame shall be placed over the load and secured after the side frames have been positioned.

NOTES: 1. For load type VIII, use storage aid 11 in lieu of wood caps, when practicable, over loads of noncontained sheets of fiberboard. Such loads shall have four side frames.

2. For load type XI, a top frame may be used in lieu of top battens to ease the placement of over-the-load straps.

3. For load type XVII, use side frames on four sides of the load.

5.4.6.3 End frames (storage aid 12). These frames shall be constructed similar to the side frames except that they will be made from nominal 2-inch thick lumber. End frames shall be used with loads such as glass window lights or storage batteries not encased in substantial wood boxes when separator supports cannot be used intermediately in the load due to the size of the units. Before the wood cap is placed over the load, end frames shall be positioned at the 48-inch ends of the load, with their bottom edges inside the inverted wood cap used under the load.

NOTES: 1. For load type VII, use end frames at the 40-inch ends of loads only when separator supports cannot be used intermediately in the load.

2. For load type XVII, use end frames in framed loads in lieu of wood caps over loads whenever they can be used effectively. Do not use storage aid 12 in lieu of wood caps in framed loads containing "unstable units."

5.4.7 Frame supports (storage aid 13). Frame supports shall consist of plain boards cut to length for the load and made from substantial lumber of random widths from 2 to 12 inches. At least two supports used with a load shall be not less than 4 inches in width. The boards shall be of nominal 1-inch thickness to provide adequate support for a superimposed minimum weight of 6,000 pounds or 3 loads of like material, whichever is lesser. Frame supports may be used in lieu of the inverted wood cap under framed loads of unstable or odd-shaped units to effect a reduction in tare weight.

Source: https://assist.dla.mil -- Downloaded: 2017-02-09T05:28Z
Check the source to verify that this is the current version before use.

The frame supports shall overhang all four sides of the pallet by an amount which will make them flush with the bottom edges of the frames when the load is bonded securely. Frame supports shall be laid on the pallet parallel to the deckboards and positioned with proper overhang at the ends and sides. The outboard supports which overhang the sides of the pallet shall be not less than 4 inches in width. One or more additional supports shall be spaced intermediately between the outboard supports, as required, to bridge approximately half of the bottom surface of each unit in the bottom layer and provide for a level, stable load. If the area occupied by the frame supports required for a load is more than 60 percent of the pallet deck, an inverted wood cap of open sheathing shall be used in lieu of the frame supports.

5.4.8 Separator supports (storage aid 14) (see figure 12, page 45). These supports shall consist of substantial lumber of not less than 1-inch nominal thickness, cut to length for the load so that they will extend flush with the outside edges of the outboard units in the rows they separate. The lumber shall be strong enough that the load, with which the supports are used, will support a superimposed minimum weight of 6,000 pounds or 3 loads of like material, whichever is lesser. Separator supports shall be used with framed loads to provide support for the wood cap used over the loads, thus preventing the cap from resting on the units in the load. The supports may be spaced intermediately and across the ends of the load or spaced intermediately alone in the 40-inch direction. When units in a load do not exceed 11 inches in height, 1 separator support shall be placed at each end of the load and 1 placed intermediately in the center if 3 supports are used, or on equal sides of the center if 4 supports are used. When the load is composed of units exceeding 11 inches in height, 1 or 2 separator support sets (2 or more boards each) shall be placed intermediately in the load provided 1 set can be located within 6 inches of the center of the load. Side frames (see 5.4.6.1) shall be used at the ends in lieu of separator supports when units are over 11 inches high.

NOTES: 1. For load type VII, use separator supports at the 40-inch ends of the load and intermediately in the load when the height of the units in the load does not exceed 11 inches; otherwise, use the separators in multiple sets intermediately in the load only in conjunction with side frames at the 40-inch ends of the load.

2. For load type XVII, use separator supports in lieu of inverted wood caps under small or narrow, framed loads when units are stable and when the combined area of the supports does not total more than 60 percent of the pallet area.

Source: https://assist.dla.mil -- Downloaded: 2017-02-09T05:28Z
Check the source to verify that this is the current version before use.

5.4.9 Separators. Separators shall be used to protect and support the individual units in a load.

5.4.9.1 Horizontal fiberboard separator (storage aid 15) (see figure 44, page 61). This separator shall consist of a single piece of double-faced CF or SF conforming to PPP-F-320, class weather-resistant. Storage aid 15 may be used between layers of nonframed loads containing lightweight units when fiberboard caps are not available. In such cases, a separator shall be placed over each layer of units (except the top layer) after each layer has been horizontally strapped. Storage aid 15 may be used between layers in framed loads of unstable or odd-shaped units which have tops and bottoms of metal, or within sectional pallet boxes as practicable, in lieu of a horizontal wood separator when such use will not result in damage to the units or contained material. Storage aid 15 may also be used with load types VIII and XVI when palletizing cylindrical or rectangular units.

5.4.9.2 Horizontal wood separator (storage aid 16) (see figure 44, page 61). This storage aid will be made from lightweight wood and may be used between layers in framed loads of unstable or odd-shaped units which have metal tops and bottoms. Its use will reduce tare weight in those instances when wood caps are not required to stabilize the load. It may also be used for separating layers of material in load type XIV, nested packer.

5.4.9.3 Separator for nested containers (storage aid 17) (see figure 21, page 50). This separator shall consist of a narrow strip of plain fiberboard cut to length so that when placed on the outside of a unit it will span the bottom and extend along the sides beyond the points at which the unit would normally bind when nested inside another like unit. Storage aid 17 may be used whenever practicable in lieu of wood caps between layers in framed loads of metal or metal-encased units. It may also be used, when necessary, in load type XVI, sectional pallet box.

5.4.9.4 Vertical wood separators (storage aid 18) (see figure 45, page 61). These separators shall be made of box lumber, three-sixteenths of an inch in thickness and nominal 4 to 6 inches in width, cut so they extend to the extreme outside of the outermost units in the rows they separate. Vertical wood separators shall be used with framed loads of side-rimmed, cylindrical or rectangular units to preclude damage to the units or to the contained material through pressure or friction resulting from handling or shipment. These type separators shall be placed on a long edge between rows of units, with at least two layers of separators used for each layer of units in the load. The first layer of separators shall be placed between rows in the 40-inch

Source: https://assist.dla.mil -- Downloaded: 2017-02-09T05:28Z
Check the source to verify that this is the current version before use.

direction, with succeeding layers placed at right angles to the layers immediately beneath. This will create individual cells for the units and will separate each one from the other units in the layer. When used with loads in which the units or contained material could be damaged by contact with the wood cap or top frame used over the entire load, the cumulative height of the several layers of separators shall be such that the top layer will extend about one-eighth of an inch above the tops of the units in the layer; otherwise, the top layer of separators will extend flush with the tops of the units.

5.4.10 Pallet strips (storage aid 19) (see figure 46, page 62). Pallet strips shall be used with vertical wood separators and will be the same thickness as the sound box lumber used for separators. They shall be the same width as the units in the load and shall extend to the extreme outside of the outboard units in the rows running in the 40-inch direction of the pallet. The pallet strips shall be nailed flat to the pallet deck in the 40-inch direction and shall be spaced approximately one-sixteenth of an inch further apart than the thickness of the strips to create slots into which the bottom edges of the lower tier separators will fit.

5.4.11 Battens. Battens are used to fill space, protect against damage, provide additional strapping surface, or help create a more stable load.

5.4.11.1 Battens, cross-strap (storage aid 20) (see figure 47, page 62). Battens shall be made of nominal 1-inch thick lumber or 1/2-inch plywood and shall be 4 to 6 inches wide (as dictated by the weight of the units). The length of the battens shall equal the height of the load. Three or more battens shall be placed in a vertical position at each 48 inch width and at the 40 inch length, when necessary. Each batten should, if practical, bridge two rows of units. Straps should be held firmly in place by staples in accordance with FF-N-105. Use cross-strap battens with noncapped load type VIII loads of rectangular units of medium through extra heavy weight. Three battens will be placed at each 48-inch side of the load, and, when required, 1 or 2 battens will be placed at each end of the load, in vertical position, with each batten bridging 2 vertical rows of units, when practical.

5.4.11.2 Battens, under- or over-the-load (storage aid 21) (see figure 48, page 63). Used for load types I and IX, these battens shall be made of nominal 1-inch thick lumber or 1/2-inch plywood and shall be 6 inches wide. Battens are cut to a length that will extend approximately to the edges of the load in the 48 inch width. When the load is compactible or compressible, the battens shall be shorter than the applicable dimensions. These battens may also be

Source: https://assist.dla.mil -- Downloaded: 2017-02-09T05:28Z
Check the source to verify that this is the current version before use.

used in conjunction with cross-strap battens. When over-the-load battens are used, the battens shall be positioned in the 48 inch width to bridge 2 rows of units.

NOTES: 1. For load type II, use storage aid 21 at sides and tops of loads in conjunction with bonding methods C and D (horizontal straps around each layer and tie-down straps) when bales or bundles of material cannot be formed into stable loads with strapping alone.

2. For load type VIII, use storage aid 21 with noncapped loads of rectangular units of medium through extra heavy weight in conjunction with cross-strap battens. Two battens will be positioned on top of the load in the 48-inch direction.

3. For load type XI, use storage aid 21 with all rolled loads, including barbed wire on reels, spools, or coils, stacked more than 2 rows in the 48-inch direction. The battens will be positioned on top of the load in the 40-inch direction and will be secured with secondary tie-down straps.

4. For load type XV, use storage aid 21 in conjunction with canvas covers. Two battens will be placed at each side of the load in a horizontal position to form two layers or tiers of battens around the load. They shall be secured with horizontal straps.

5.4.11.3 Battens, oxygen cylinder or gas cylinder (storage aids 22 and 23) (see figure 14, page 46). These battens shall be made of nominal 1-inch thick by 4-inch width lumber cut so that they extend to the center lines of the outboard rows of units. The ends shall be beveled along one face and will be placed against the load with the bevels outboard. They shall be positioned in one horizontal layer around the bottom of the load at the pallet level and held in place against the load by one horizontal steel strap 1 1/4 inches wide by .030-inch thick. The straps shall be secured to the battens with staples driven fully into the batten after the straps have been secured. When deemed necessary, battens made from nominal 2-inch thick by 4-inch width lumber may be used.

5.4.12 Wood collar (storage aid 24) (see figure 14, page 46). Wood collars shall be used with loads of compressed gas cylinders to make a stable load by creating integral bonding of the units and preventing lateral movement of the unit cylinders. A wood collar also provides a level platform for superimposed loads. Wood collars are constructed so that their height extends beyond the tops

Source: https://assist.dla.mil -- Downloaded: 2017-02-09T05:28Z
Check the source to verify that this is the current version before use.

of the units encompassed. The outside member of a collar shall enclose the tops of the units around the perimeter of the load. The inner partitions shall contain or separate the rows of gas cylinders with the edges of the collar resting upon the shoulder of the cylinders. The collar shall be placed over the load after the units have been arranged on the pallet and before positioning the battens. The tops of all units shall be enclosed by the sides of the collar and its partitions. The collar shall be held in position by the appropriate number of tie-down straps.

5.4.13 Notched wood spacer (storage aid 25) (see figure 49, page 64). This spacer is made from heavy lumber and notched or recessed across opposing faces at regular intervals along its length. The notches shall be cut to fit snugly around part of the perimeter of the units of the load. The notched wood spacer shall be used with framed loads of unboxed cylindrical units stacked horizontally to stabilize the load and to protect the units against damage from handling during shipment. Two or more spacers are required for the safe stacking of cylindrical units, and they shall be placed under the load at right angles to the length of the units. An equal number of spacers shall be used between each course, but none on the top of the load. The length of the spacers in a load shall be sufficient to extend to or slightly beyond the edge of the load. For load type XVII, use storage aid 25 under the load, on top of inverted caps, and between layers of framed, cylindrical, self-supporting units stacked horizontally such as metal or concrete pipes or axles. Do not use notched wood spacers with rolls of cloth, screening, or similar material.

5.4.14 Sectional pallet box (storage aid 26) (see figure 23, page 51). This box shall be made from nominal 1-inch lumber or 5/8-inch thick plywood panel, using a pallet as the base or bottom of the box. Each section shall consist of four boards of the same width nailed together to form a hollow rectangle of the same size as the pallet deck. An approximate 1- by 2-inch piece of lumber with its length equal to the width of the boards shall be nailed inside each corner of the section and positioned so that all extend about 1 inch beyond the same edge of the section. These corners or posts serve to keep superimposed sections correctly positioned. By constructing sections from various widths of lumber or plywood, the pallet box may be assembled to the exact height required by the units comprising any load. One section of the box shall be placed on an empty pallet, with the units arranged inside up to the height of the section. The superimposed sections are then positioned and individually stacked until the load has been completed. Horizontal fiberboard or wood separators may be used at intermediate top levels of each section. The box shall be covered by a one-piece

Source: https://assist.dla.mil -- Downloaded: 2017-02-09T05:28Z
Check the source to verify that this is the current version before use.

lid of fiberboard, closed wood, or plywood sheathing, nailed in place and secured by the prescribed number of tie-down straps.

5.4.15 Nested packer (storage aid 27) (see figure 21, page 50). This packer shall be constructed of fiberboard or light wood. It will have a base the size of the pallet deck and will consist of interior interlocking partitions. Requirements for packaging items going into the nested packer will depend on the nature of the item.

5.4.16 Chimney filler (storage aid 28) (see figure 50, page 64). The chimney filler shall be made from SF or double-wall CF, minimum 275 pounds bursting strength, scored and folded to the required size to fit into the chimney or void which occasionally develops in a load due to the size or shape of the units. The filler must fill the void snugly in the top layer of rectangular units to preclude the lateral movement of such units away from the perimeter of the load. When the pallet pattern results in voids which are staggered from layer to layer, the filler shall be required only in the top layer. When the voids in each layer are superimposed, the filler shall extend the full length of the chimney. This filler is primarily used with load types I and VIII for noncapped, nonframed, or nonboxed strapped loads when voids exist between rectangular units within the load. A framework of light wood may be used in lieu of solid fiberboard for the chimney filler.

5.4.17 Polyethylene Sheeting, 1 mil (storage aid 29). This aid consists of a sheet of PE, large enough to drape over the top of a palletized load and extend at least 6 inches down each side and each end. The sheet should be placed over the top after the first wrap is applied. For load types Ia, II, and XV, use storage aid 29 over the top of a stretch-wrap load prior to wrapping the load to provide bonding and water protection. This storage aid is only required when protection from water is necessary.

5.5 Marking. Except as noted below, marking shall be in accordance with MIL-STD-129.

5.5.1 Marking of petroleum and petroleum related products shall be as specified in MIL-STD-290.

5.5.2 Marking of tires shall be as specified in MIL-STD-129 and in MIL-T-4.

5.5.3 Marking of unfabricated steel mill products shall be as specified in MIL-STD-129 and in MIL-STD-163.

Source: https://assist.dla.mil -- Downloaded: 2017-02-09T05:28Z
Check the source to verify that this is the current version before use.

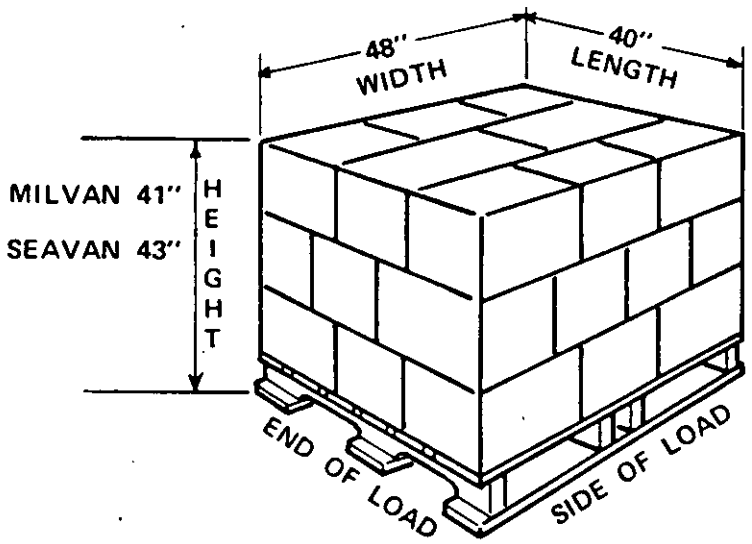

(See 5.1.1.1)

FIGURE 2. Palletized unit load sizes.

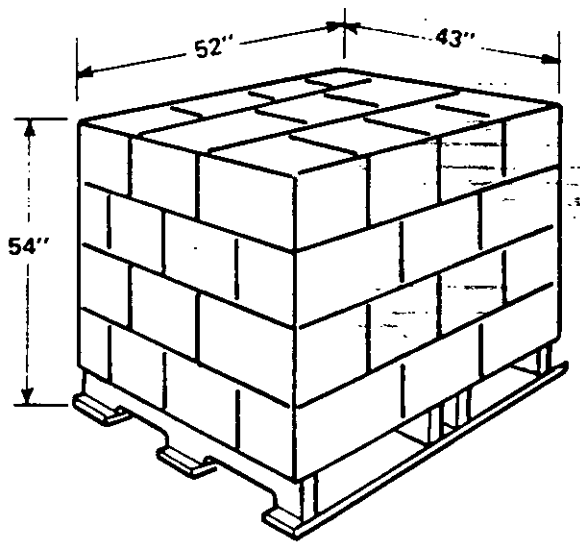

(See 5.1.2)

FIGURE 3. Other palletized unit load sizes.

Source: https://assist.dla.mil -- Downloaded: 2017-02-09T05:28Z
Check the source to verify that this is the current version before use.

(See 5.2.1)

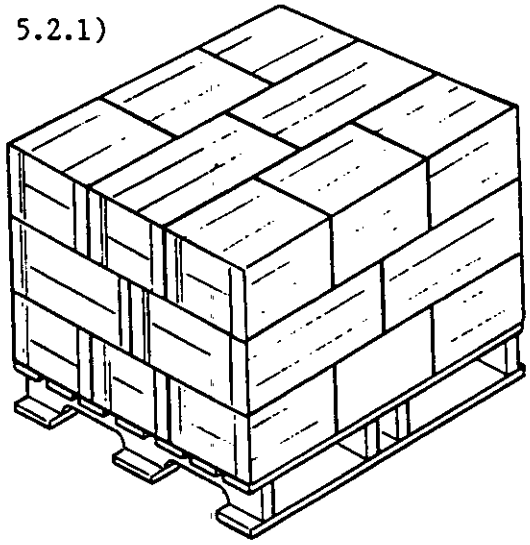

FIGURE 4. Load type I.

(See 5.2.1.1)

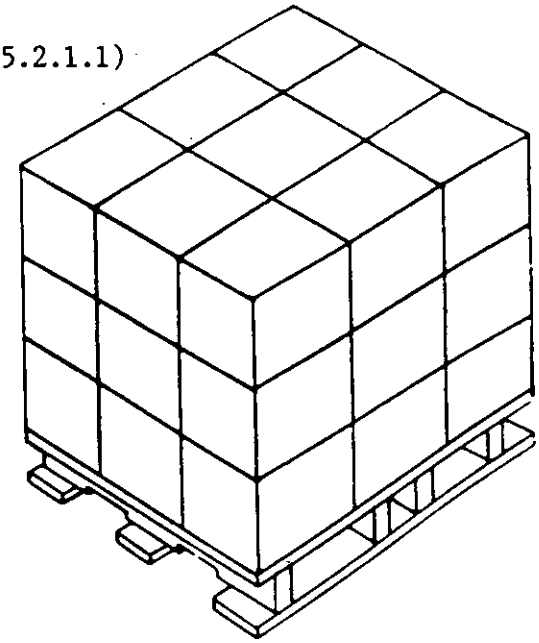

FIGURE 5. Load type Ia.

(See 5.2.2)

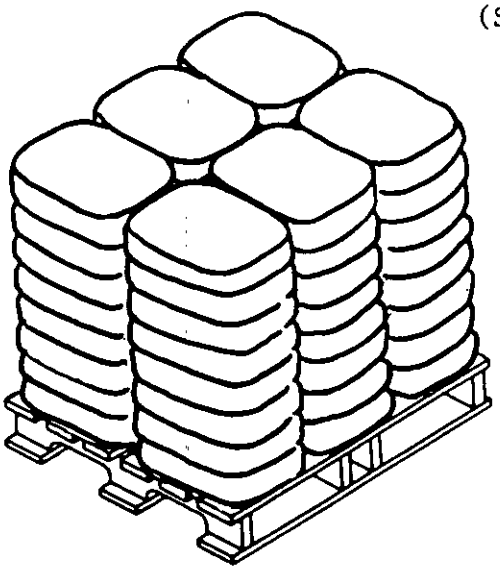

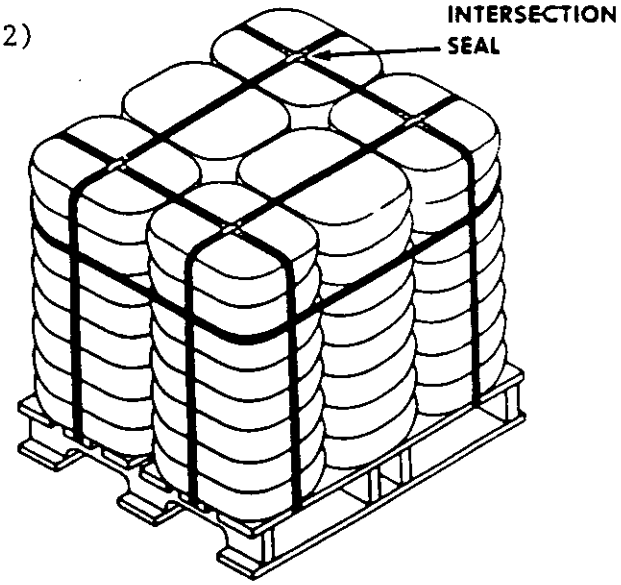

FIGURE 6. Load type II (unstrapped and strapped).

Source: https://assist.dla.mil -- Downloaded: 2017-02-09T05:28Z
Check the source to verify that this is the current version before use.

(See 5.2.3)

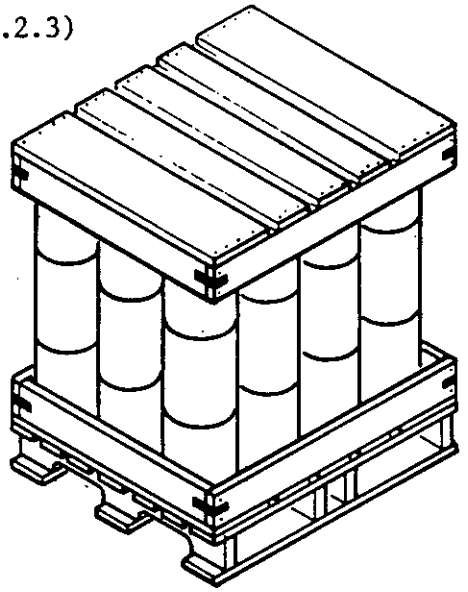

FIGURE 7. Load type III.

(See 5.2.3.1)

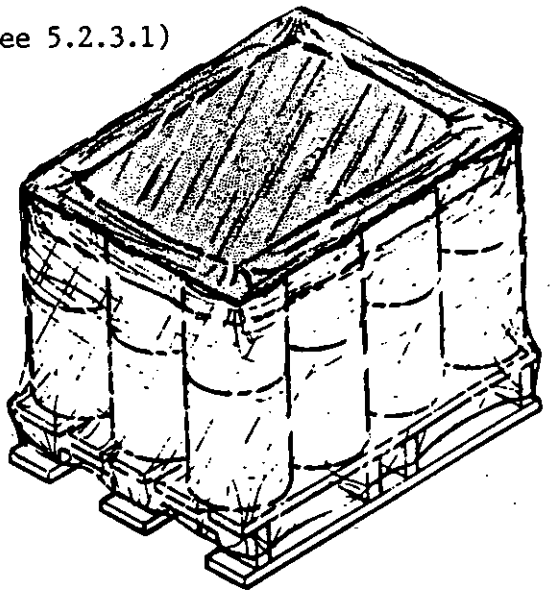

FIGURE 8. Load type IIIa.

(See 5.2.4)

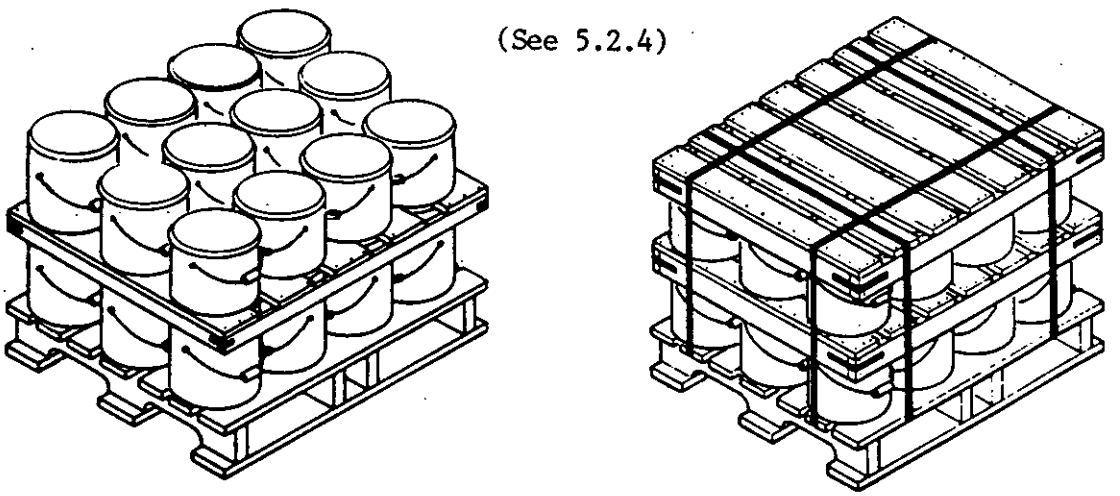

FIGURE 9. Load type IV (unstrapped and strapped).

Source: https://assist.dla.mil -- Downloaded: 2017-02-09T05:28Z
Check the source to verify that this is the current version before use.

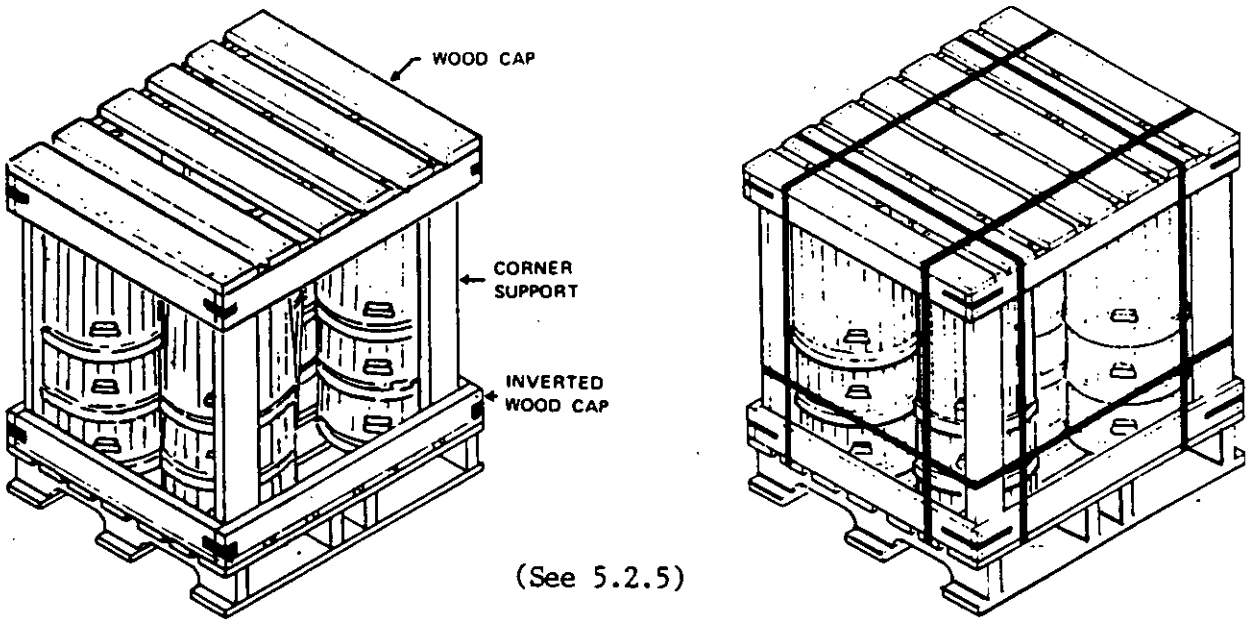

FIGURE 10. Load type V (unstrapped and strapped).

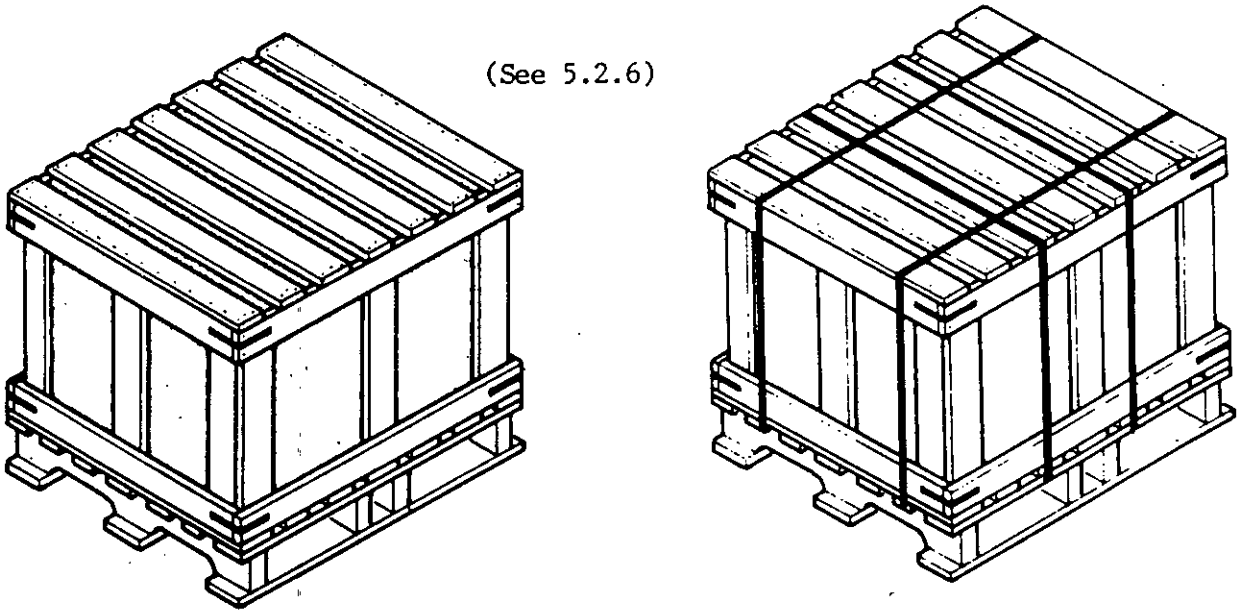

FIGURE 11. Load type VI (unstrapped and strapped).

Source: https://assist.dla.mil -- Downloaded: 2017-02-09T05:28Z
Check the source to verify that this is the current version before use.

(See 5.2.7 & 5.4.8)

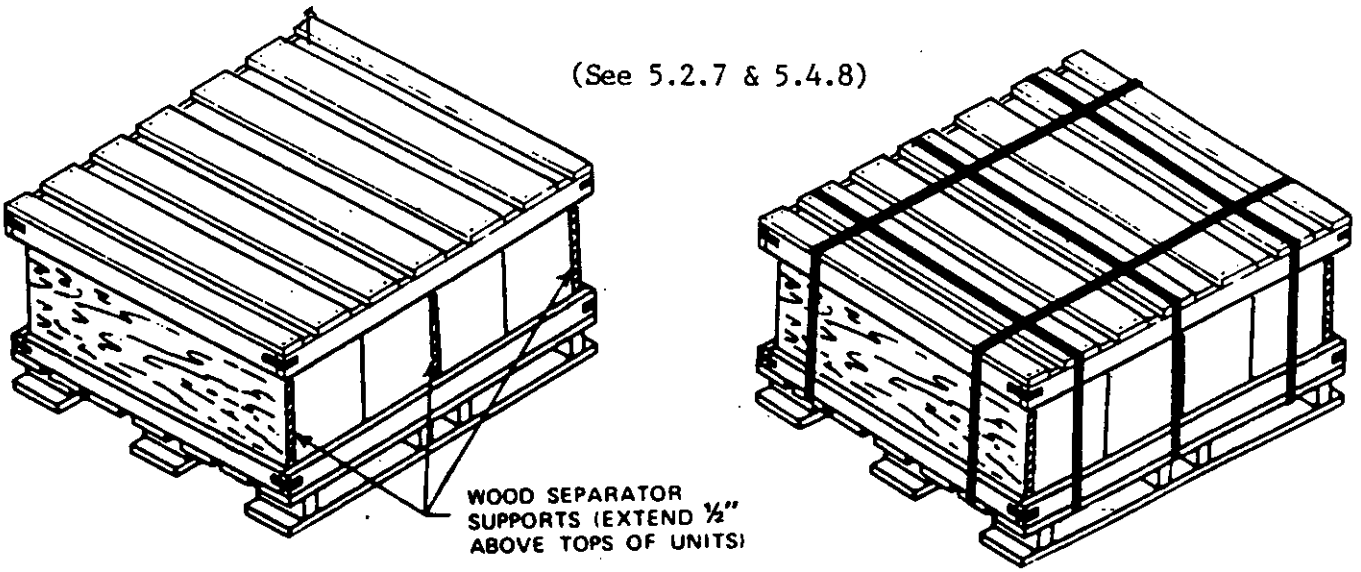

FIGURE 12. Load type VII (unstrapped and strapped).

(See 5.2.8)

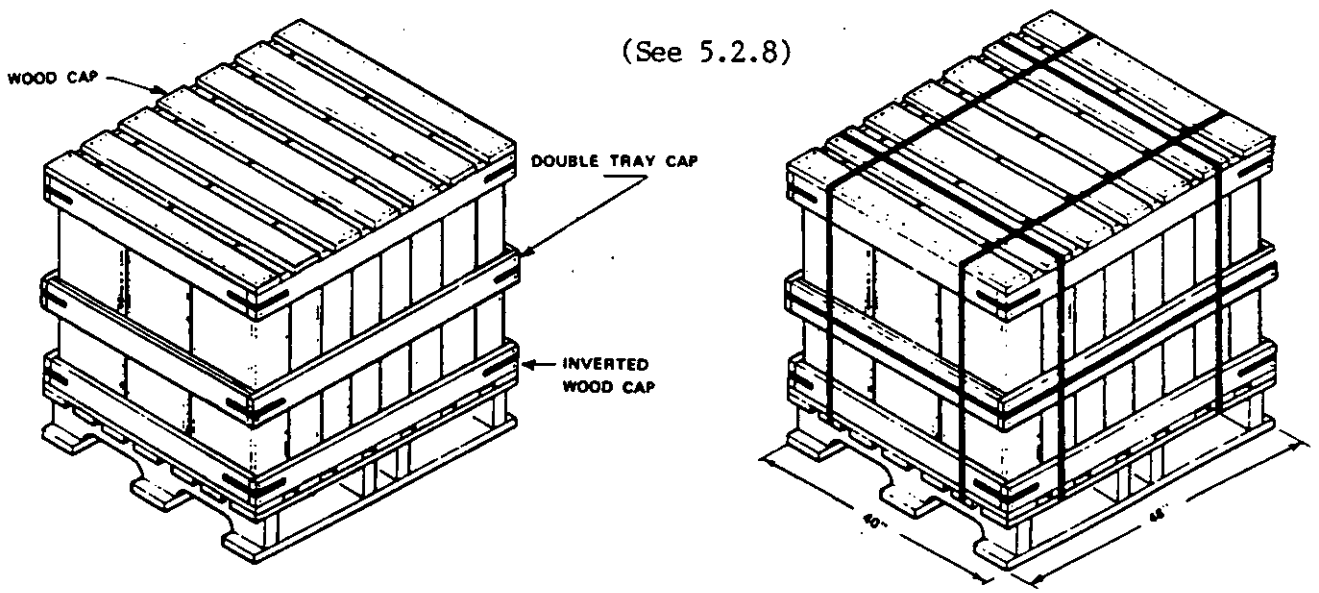

FIGURE 13. Load type VIII (unstrapped and strapped).

Source: https://assist.dla.mil -- Downloaded: 2017-02-09T05:28Z
Check the source to verify that this is the current version before use.

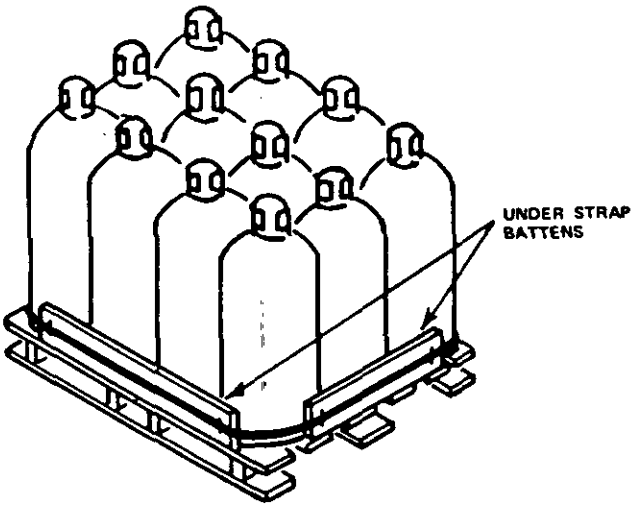

(See 5.2.9, 5.4.11.3, & 5.4.12)

BILL OF MATERIALS			
(a)			
WOOD COLLAR FOR ACETYLINE CYLINDERS			
ITEM	DESCRIPTION	QTY	SIZE
A	SIDE SLATS	2	2"X8"X42"
B	END SLATS	2	2"X8"X33½"
C	PARTITIONS	2	2"X8"X 30½"
D	STEEL STRAP	1	1¼"X.035"X15'6"
E	STRAPPING SEALS	1	1¼"
F	STAPLES	8	1¼"
G	COATED NAILS	40	12d
(b)			
WOOD COLLAR FOR OXYGEN CYLINDERS			
ITEM	DESCRIPTION	QTY	SIZE
A	SIDE SLATS	2	2"X8"X41"
B	END SLATS	2	2"X8"X35¼"
C	PARTITIONS	2	2"X8"X32¼"
D	STEEL STRAP	1	1¼"X.035"X14'6"
E	STRAPPING SEALS	1	1¼"
F	STAPLES	8	1¼"
G	COATED NAILS	40	12d
(c)			
WOOD COLLAR FOR FREON CYLINDERS			
ITEM	DESCRIPTION	QTY	SIZE
A	SIDE SLATS	2	2"X8"X45½"
B	END SLATS	2	2"X8"X41"
C	PARTITIONS	2	2"X8"X 38"
D	STEEL STRAP	1	1¼"X.035"X15'6"
E	STRAPPING SEALS	1	1¼"
F	STAPLES	8	1¼"
G	COATED NAILS	40	12d

NOTE: USE 5 12d COATED NAILS AT EACH JOINT

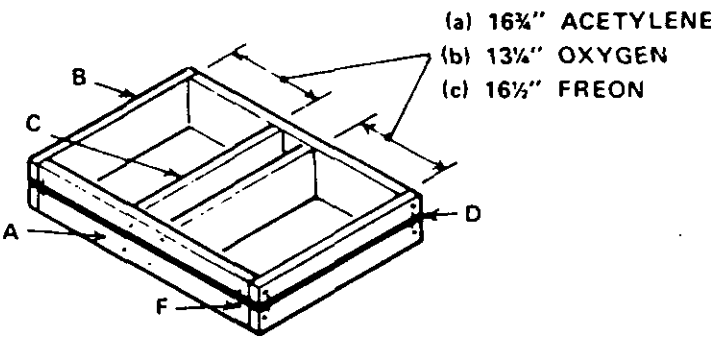

WOOD COLLAR

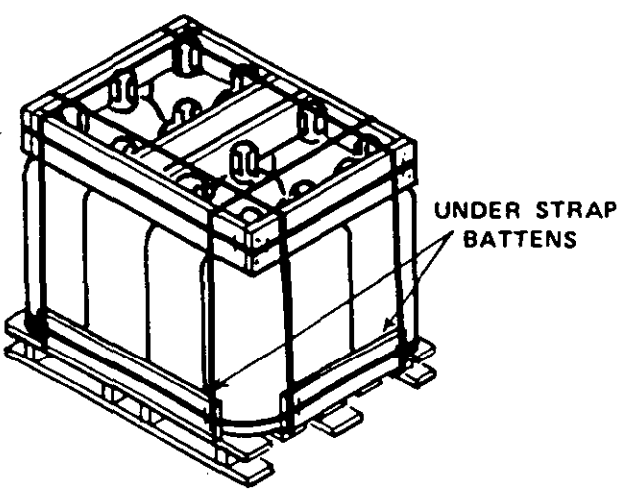

FIGURE 14. Load type IX (unstrapped and strapped).

Source: https://assist.dla.mil -- Downloaded: 2017-02-09T05:28Z
Check the source to verify that this is the current version before use.

(See 5.2.10)

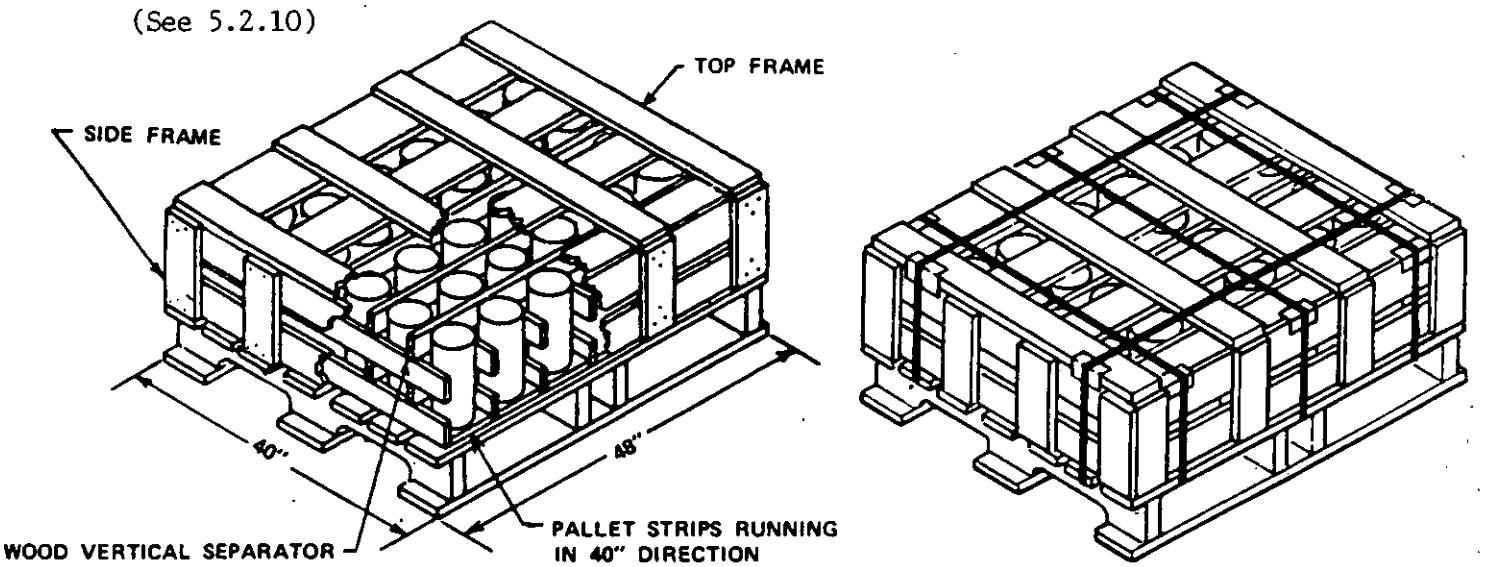

FIGURE 15. Load type X (unstrapped and strapped).

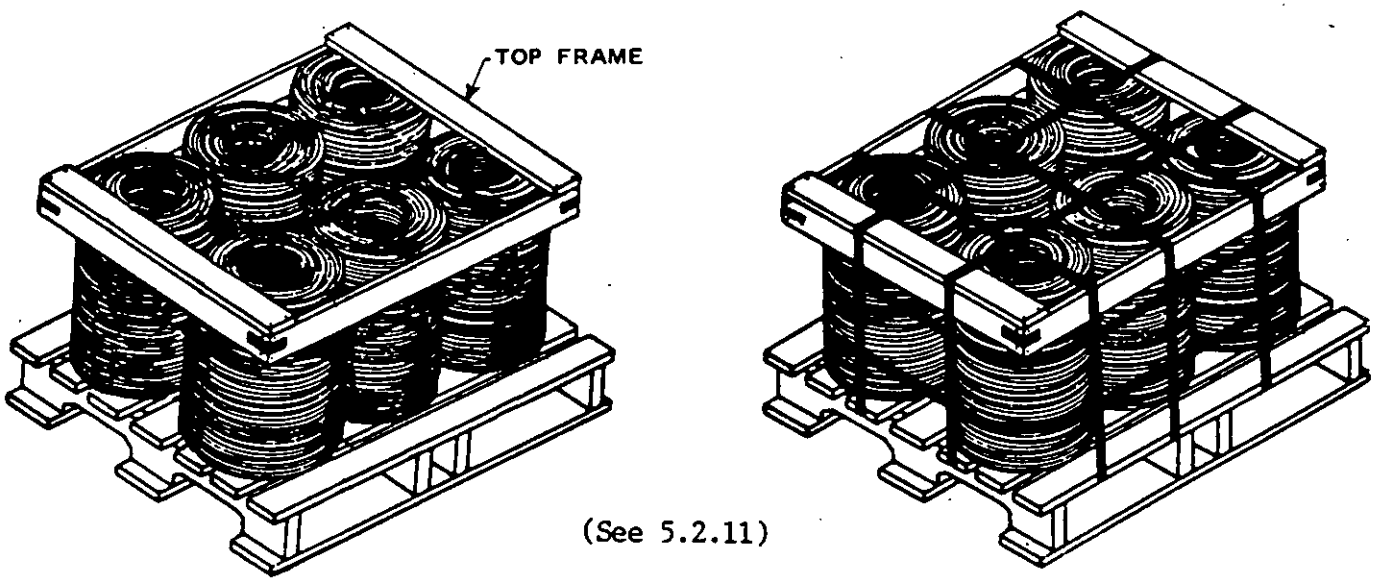

(See 5.2.11)

FIGURE 16. Load type XI (unstrapped and strapped).

Source: https://assist.dla.mil -- Downloaded: 2017-02-09T05:28Z
Check the source to verify that this is the current version before use.

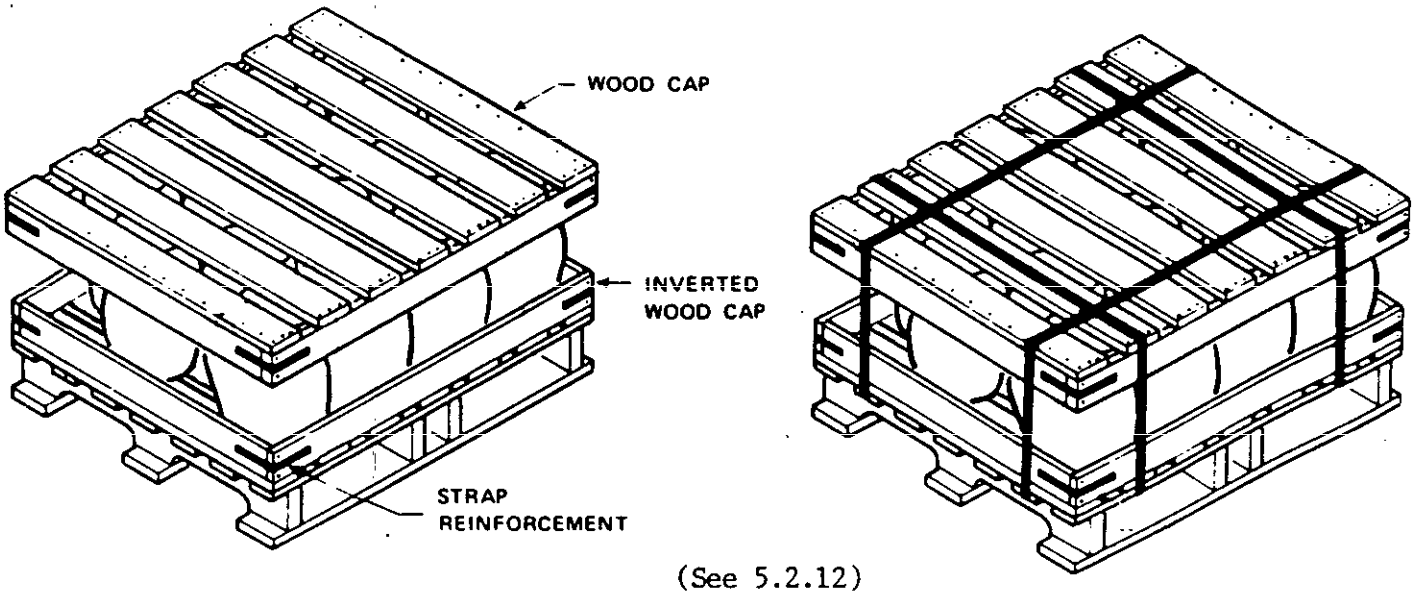

(See 5.2.12)

FIGURE 17. Load type XII (unstrapped and strapped).

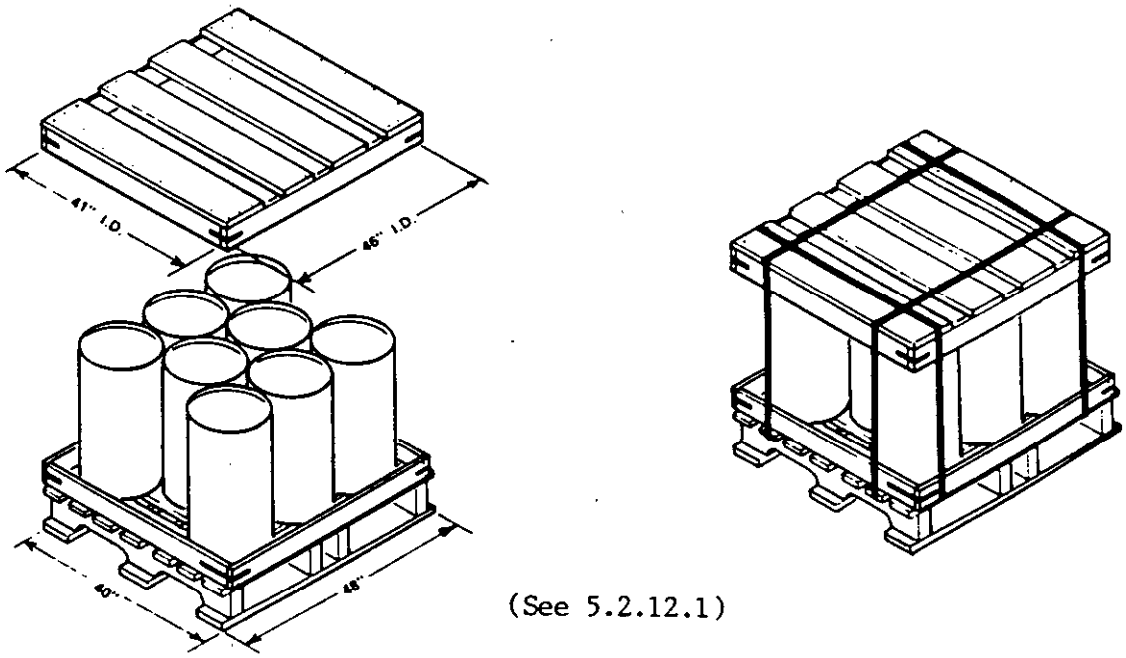

(See 5.2.12.1)

FIGURE 18. Load type XIIa (unstrapped and strapped).

Source: https://assist.dla.mil -- Downloaded: 2017-02-09T05:28Z
Check the source to verify that this is the current version before use.

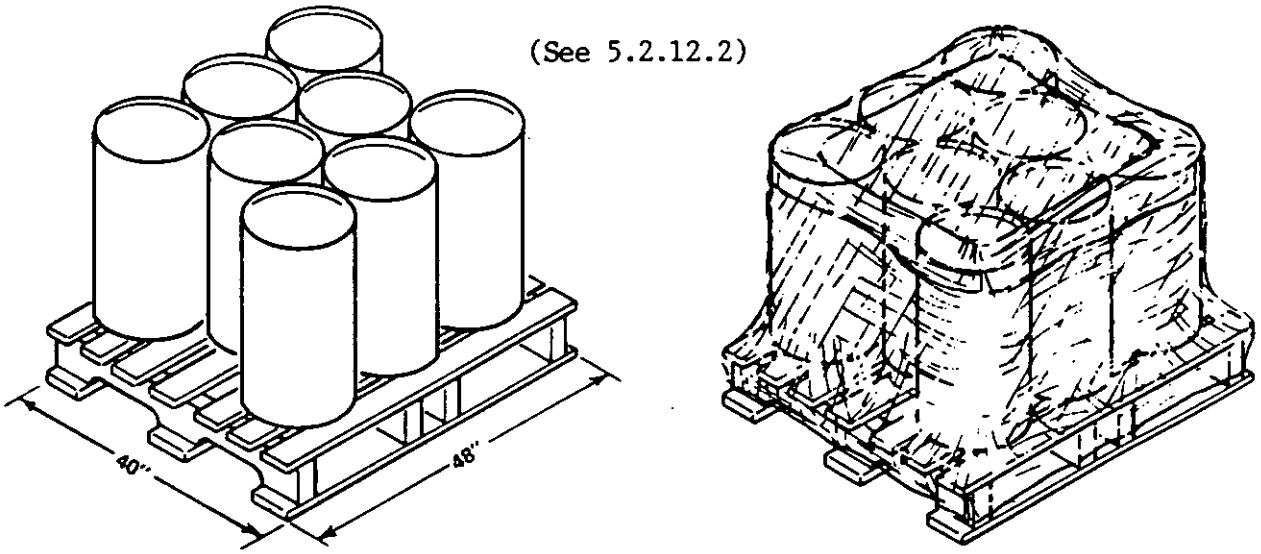

FIGURE 19. Load type XIIb (uncovered and stretch-wrapped).

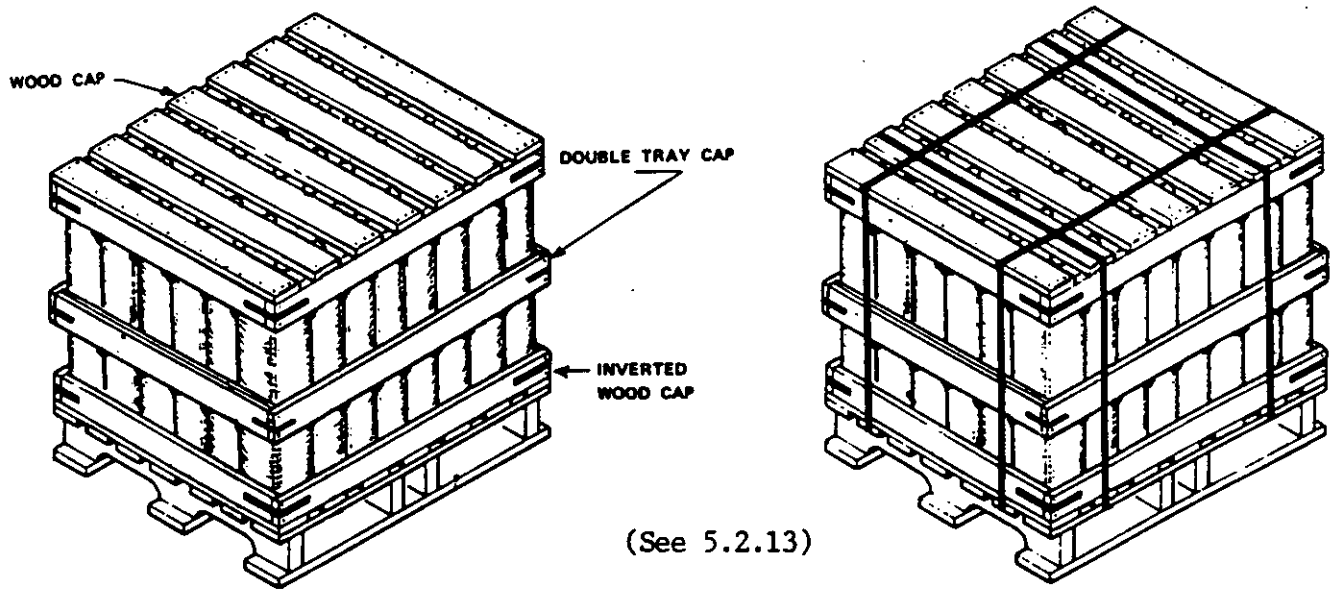

FIGURE 20. Load type XIII (unstrapped and strapped).

Source: https://assist.dla.mil -- Downloaded: 2017-02-09T05:28Z
Check the source to verify that this is the current version before use.

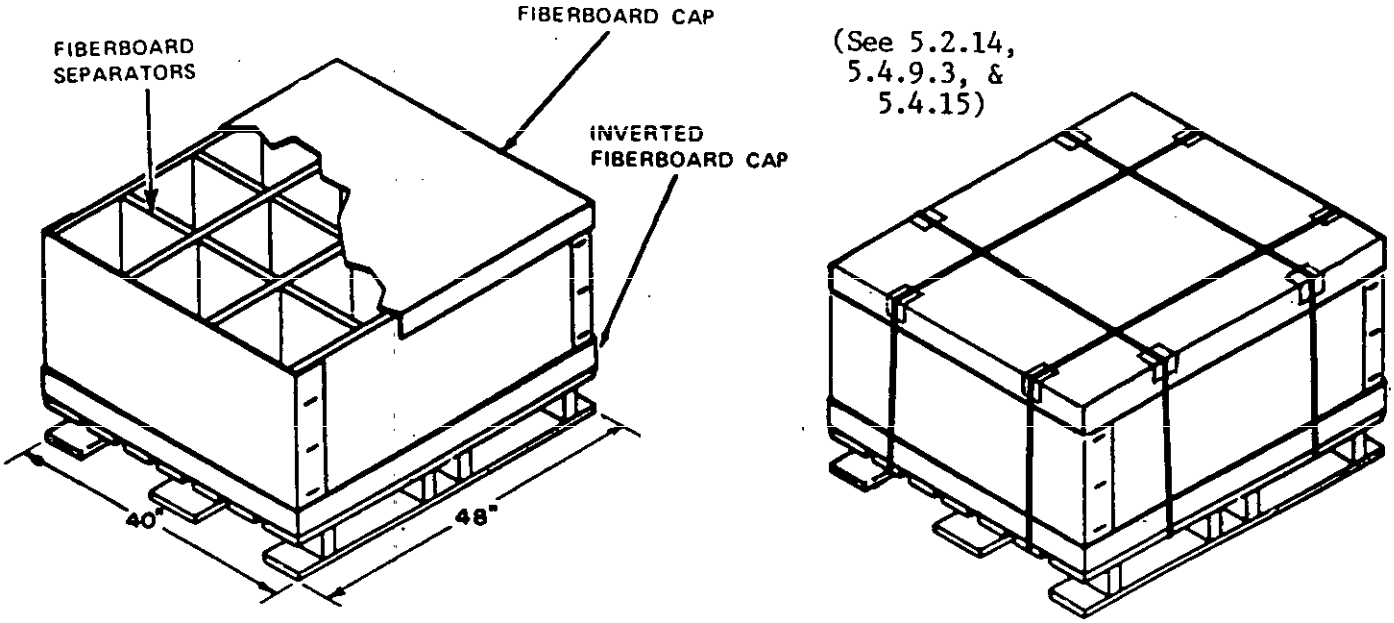

FIGURE 21. Load type XIV (unstrapped and strapped).

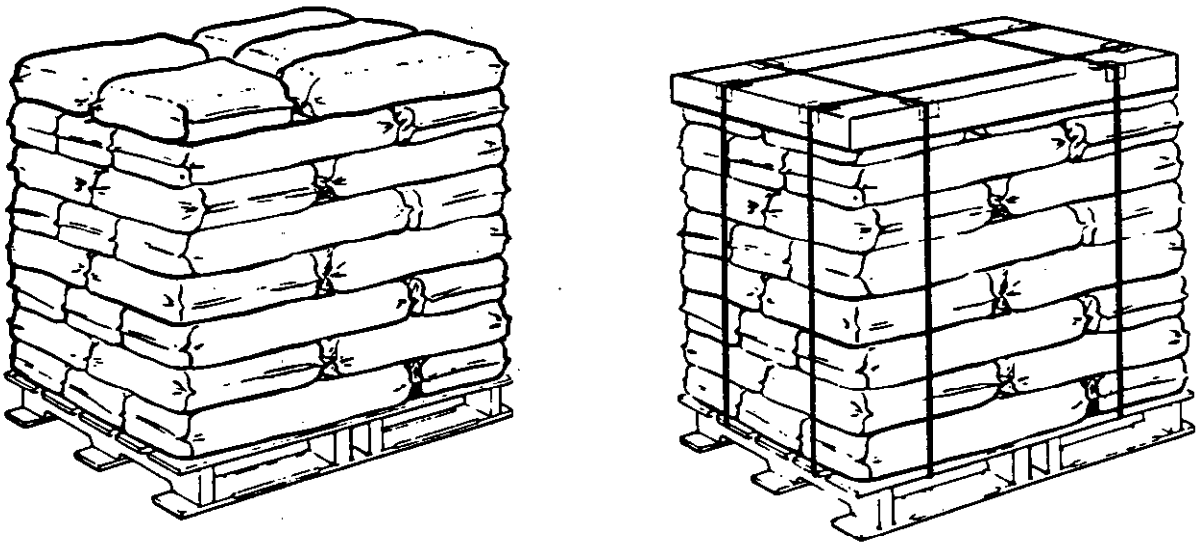

(See 5.2.15)

FIGURE 22. Load type XV (unstrapped and strapped).

Source: https://assist.dla.mil -- Downloaded: 2017-02-09T05:28Z
Check the source to verify that this is the current version before use.

(See 5.2.16 & 5.4.14)

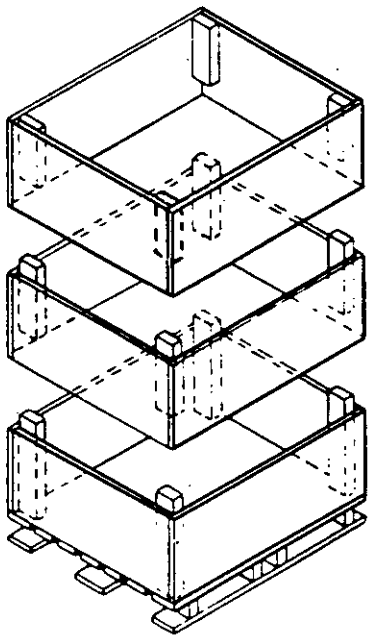

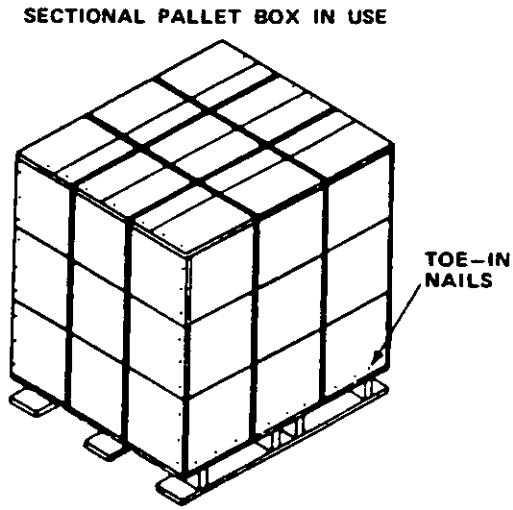

FIGURE 23. Load type XVI.

(See 5.2.17)

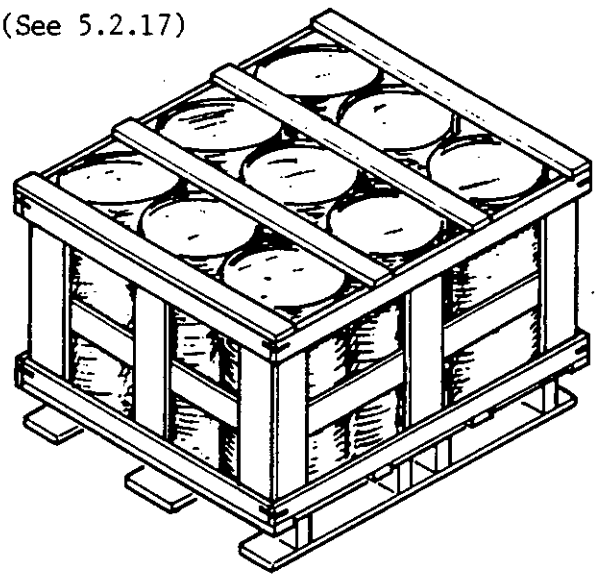

(See 5.2.18)

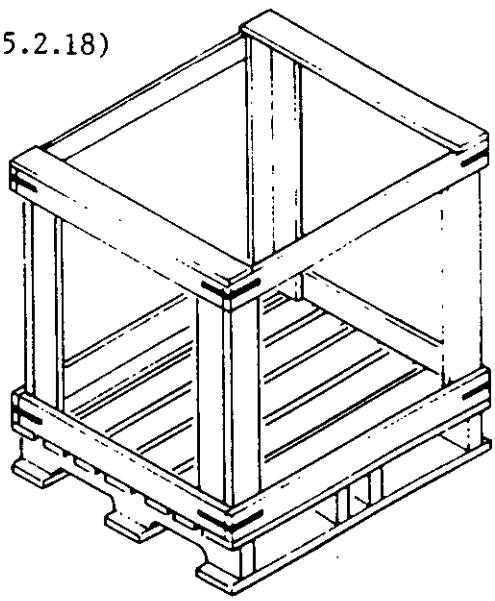

FIGURE 24. Load type XVII.

FIGURE 25. Load type XVIII.

Source: https://assist.dla.mil -- Downloaded: 2017-02-09T05:28Z
Check the source to verify that this is the current version before use.

(See 5.3.1.1)

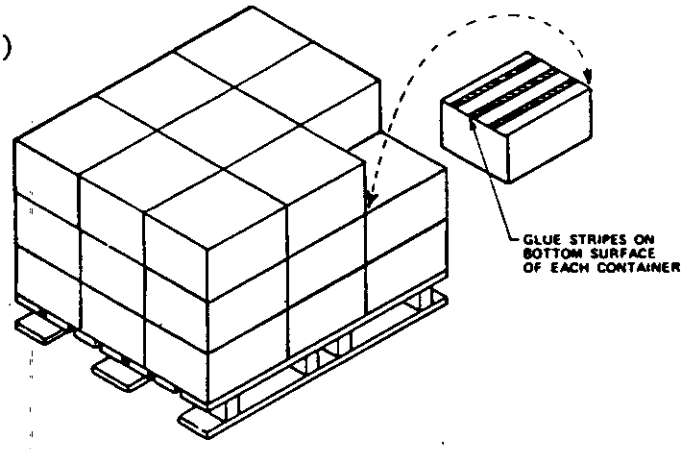

FIGURE 26. Bonding method A (glue stripes).

(See 5.3.1.2)

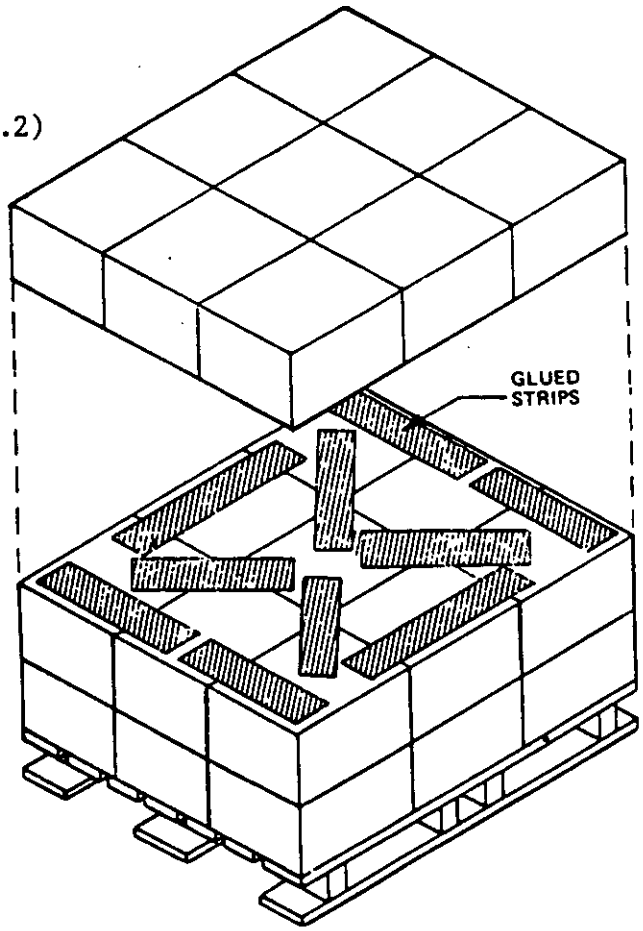

FIGURE 27. Bonding method B (glued strips).

Source: https://assist.dla.mil -- Downloaded: 2017-02-09T05:28Z
Check the source to verify that this is the current version before use.

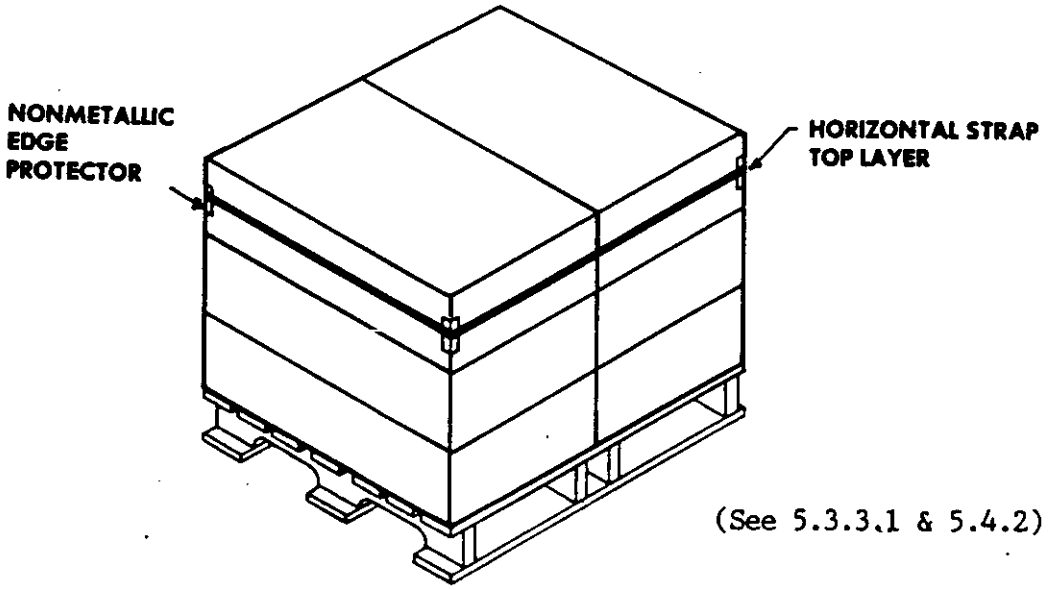

FIGURE 28. Bonding method C (top layer or single layer).

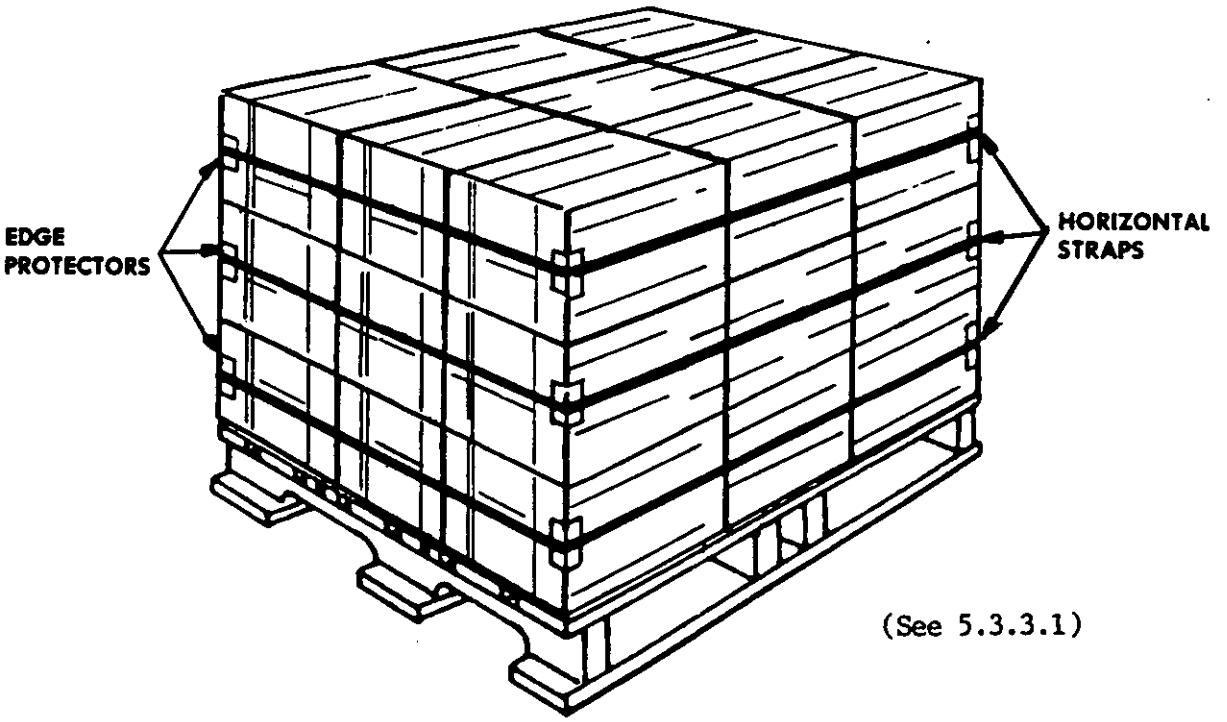

FIGURE 29. Bonding method C (each layer).

Source: https://assist.dla.mil -- Downloaded: 2017-02-09T05:28Z
Check the source to verify that this is the current version before use.

(See 5.3.3.1)

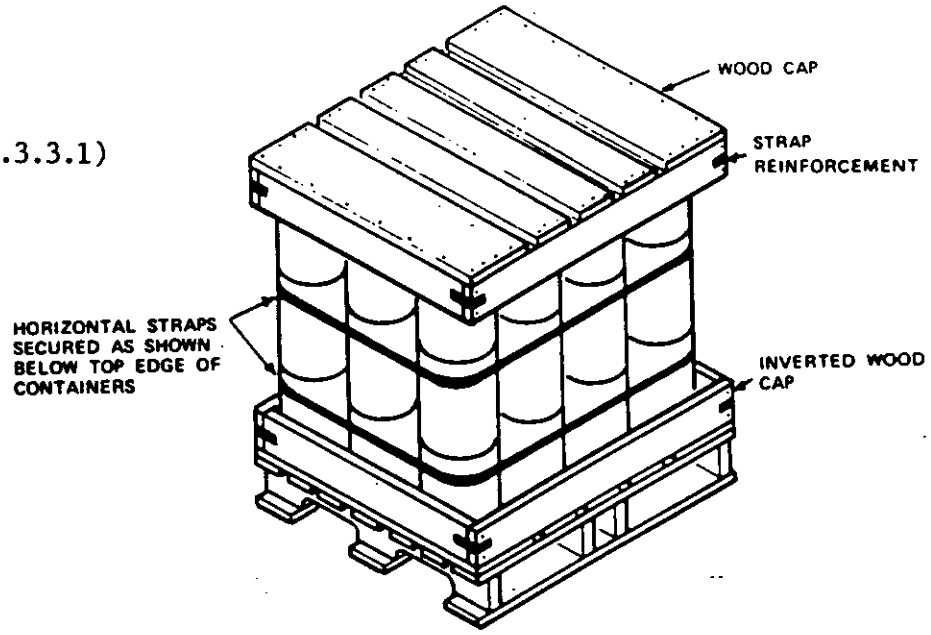

FIGURE 30. Bonding method C (each layer except top layer).

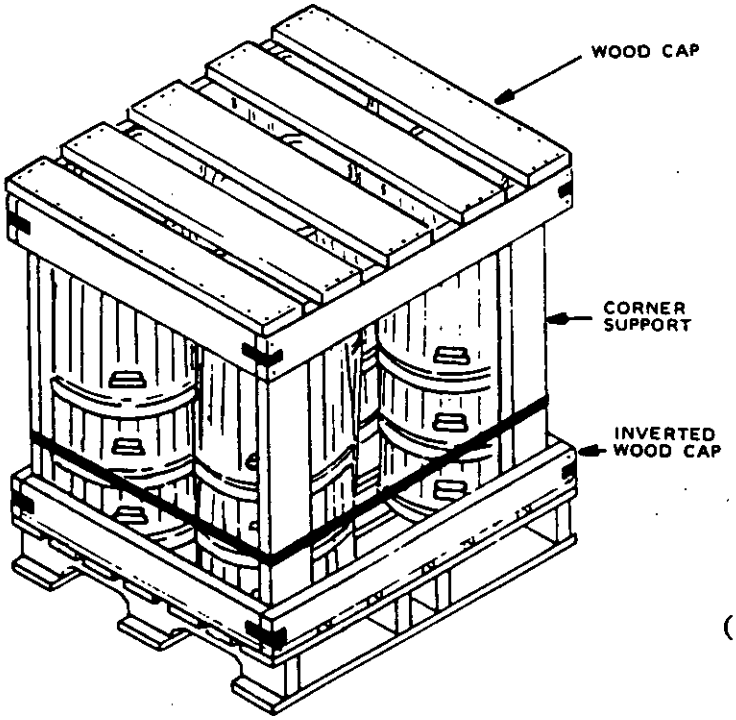

(See 5.3.3.1)

FIGURE 31. Bonding method C (bottom of framed load outside the frame).

Source: https://assist.dla.mil -- Downloaded: 2017-02-09T05:28Z
Check the source to verify that this is the current version before use.

(See 5.3.3.1)

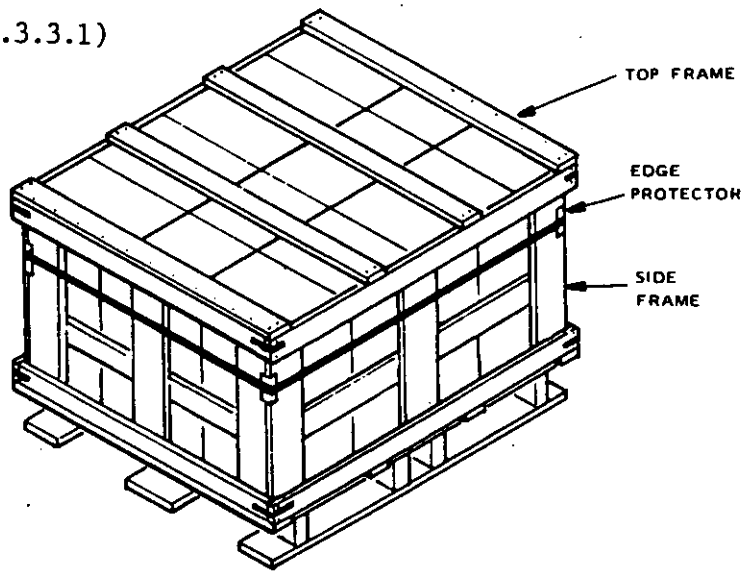

FIGURE 32. Bonding method C (top of a framed load outside the frame).

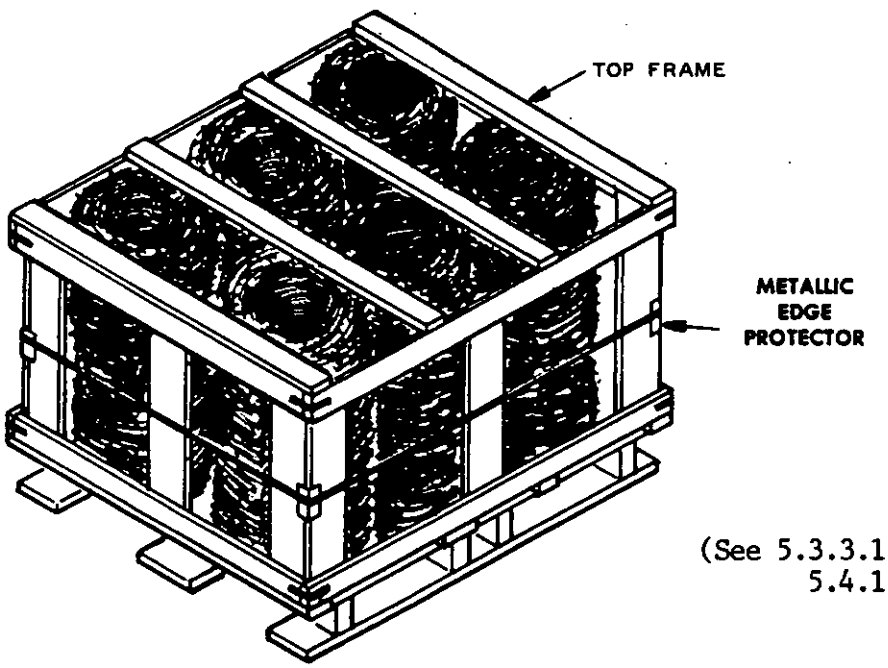

(See 5.3.3.1 & 5.4.1)

FIGURE 33. Bonding method C (center of a framed load outside the frame).

Source: https://assist.dla.mil -- Downloaded: 2017-02-09T05:28Z
Check the source to verify that this is the current version before use.

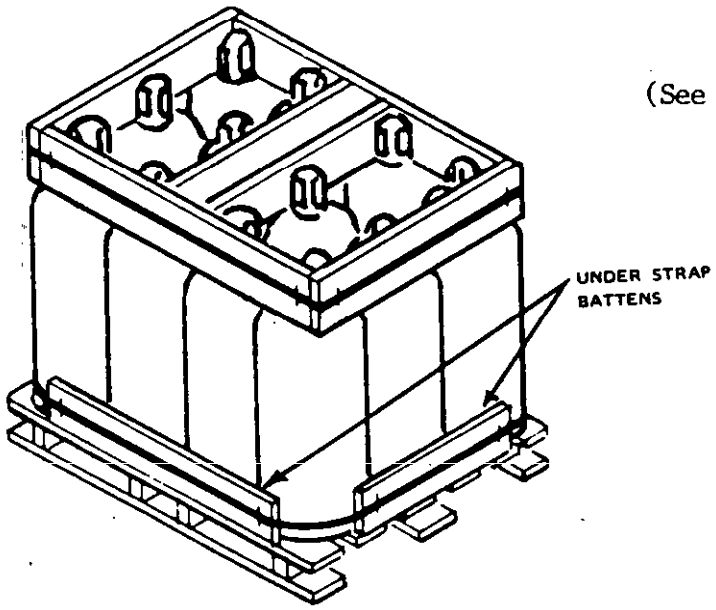

(See 5.3.3.1)

FIGURE 34. Bonding method C (one strap at bottom of a load of compressed gas cylinders outside the battens).

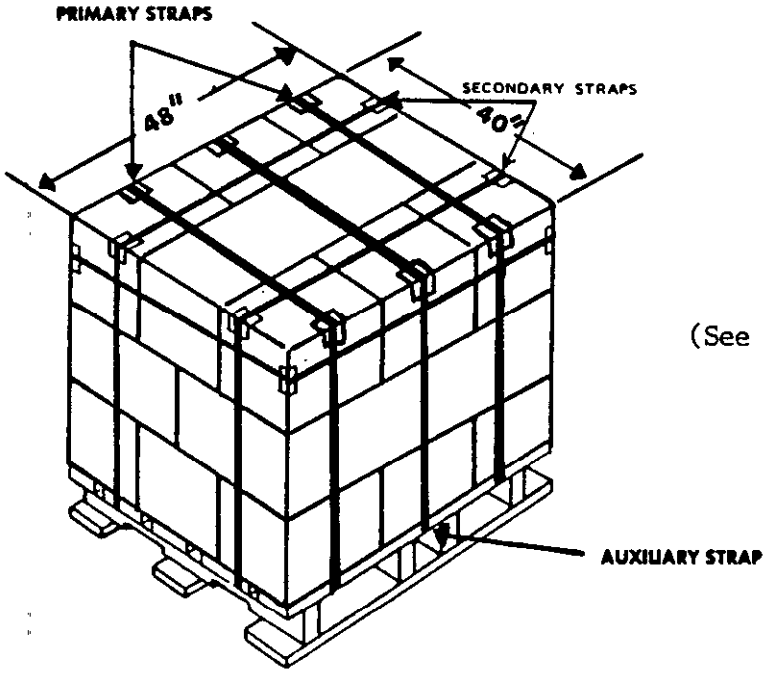

(See 5.3.3.2)

FIGURE 35. Bonding method D (tie-down straps).

Source: https://assist.dla.mil -- Downloaded: 2017-02-09T05:28Z
Check the source to verify that this is the current version before use.

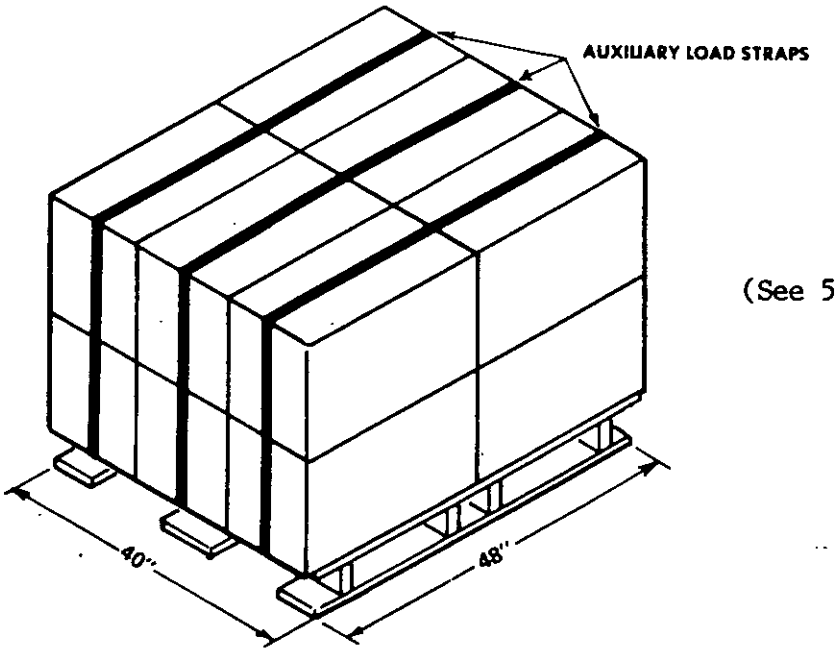

(See 5.3.3.3)

FIGURE 36. Bonding method E (auxiliary load straps).

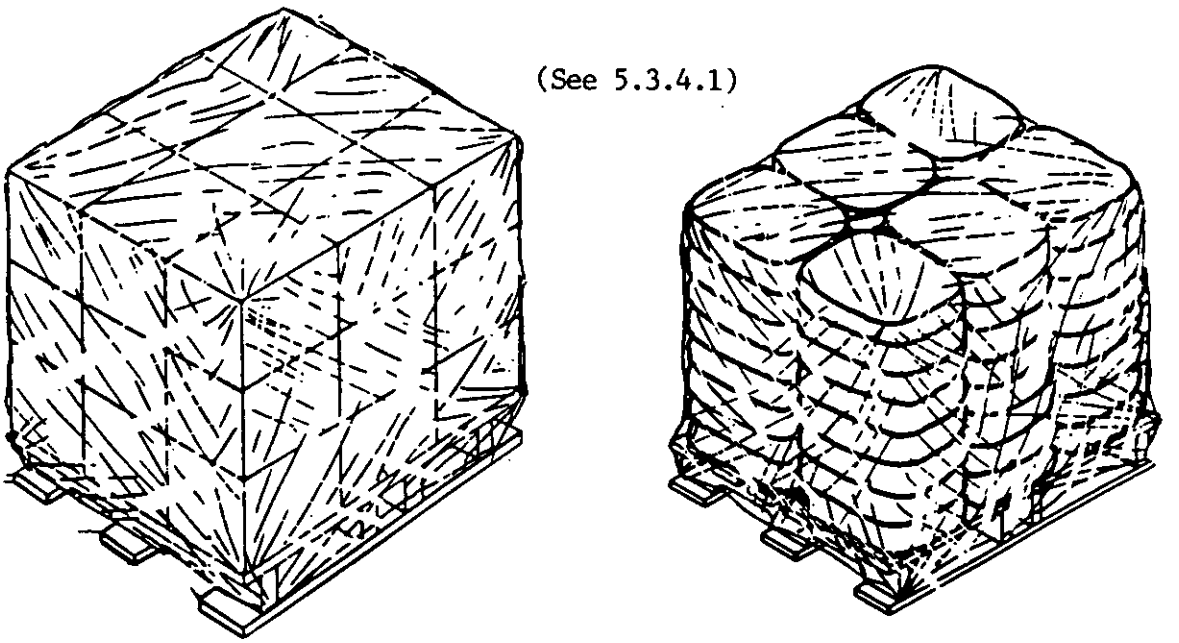

(See 5.3.4.1)

FIGURE 37. Bonding method F (shrink wrap).

Source: https://assist.dla.mil -- Downloaded: 2017-02-09T05:28Z
Check the source to verify that this is the current version before use.

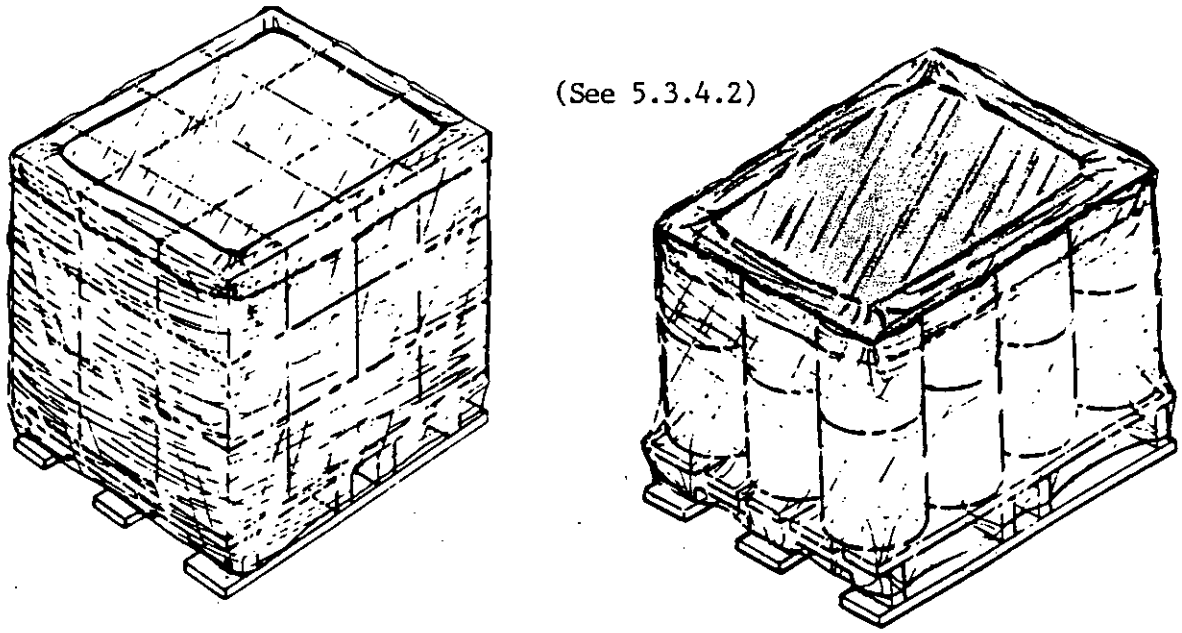

FIGURE 38. Bonding method G (stretch wrap).

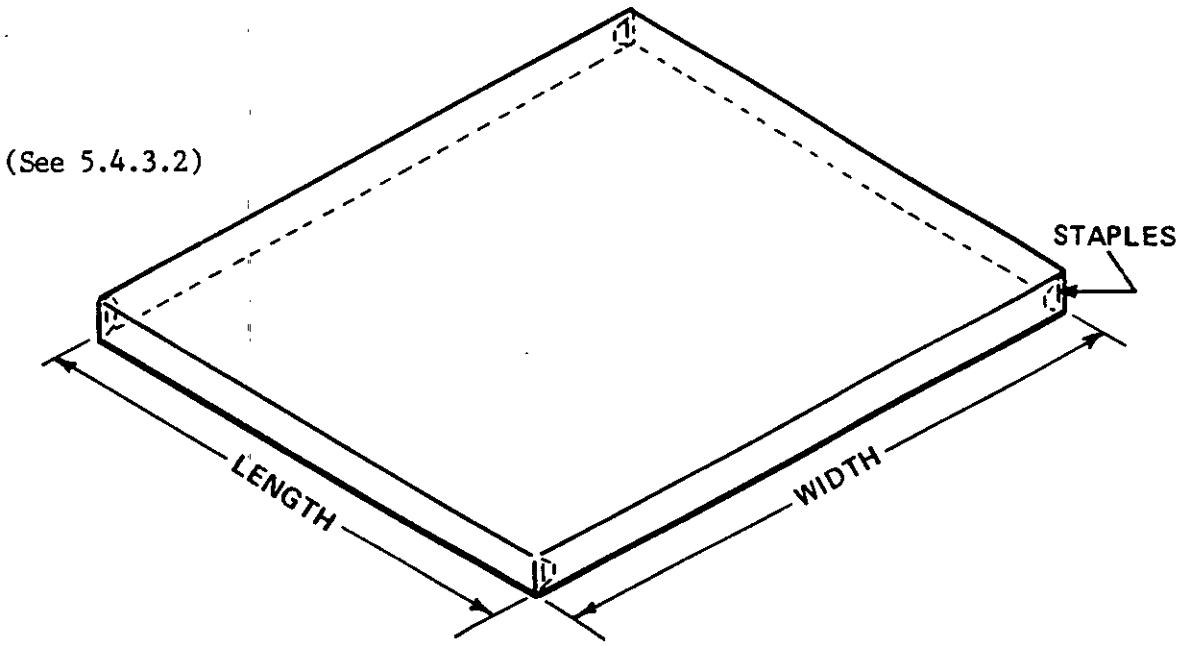

FIGURE 39. Fiberboard cap (one piece construction).

Source: https://assist.dla.mil -- Downloaded: 2017-02-09T05:28Z
Check the source to verify that this is the current version before use.

(OPEN CAP)

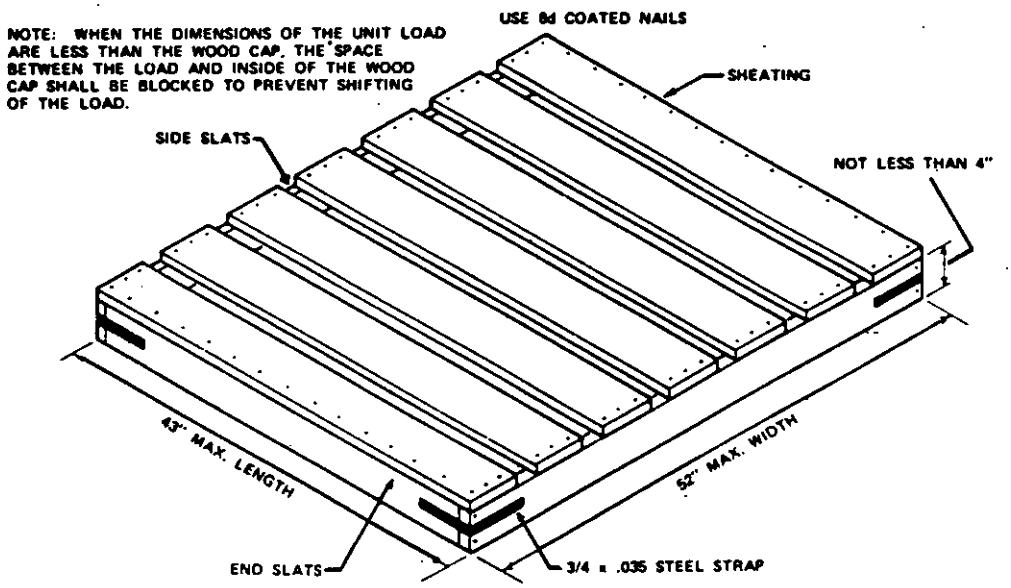

(CLOSED CAP) (See 5.4.3.3)

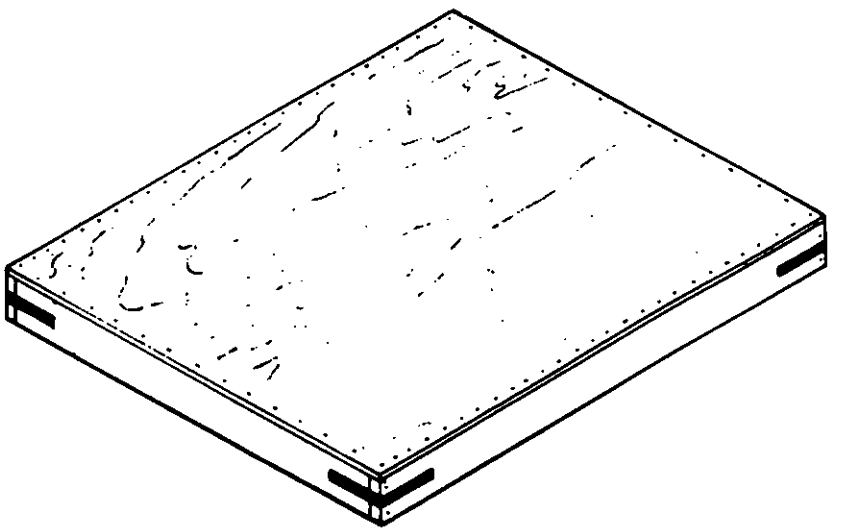

FIGURE 40. Open and closed wood caps.

Source: https://assist.dla.mil -- Downloaded: 2017-02-09T05:28Z
Check the source to verify that this is the current version before use.

(See 5.4.3.4)

NOTE: WHEN THE DIMENSIONS OF THE UNIT LOAD ARE LESS THAN THE TRAY CAP, THE SPACE BETWEEN THE LOAD AND INSIDE OF THE TRAY CAP SHALL BE BLOCKED TO PREVENT SHIFTING OF THE LOAD.

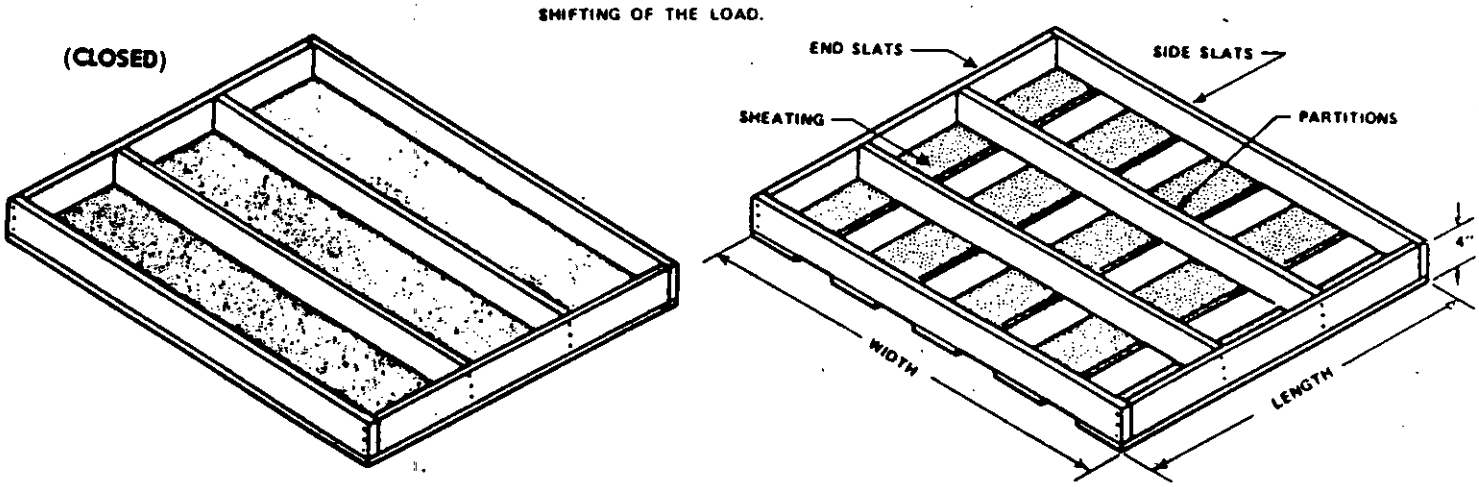

FIGURE 41. Open and closed tray caps.

NOTE: WHEN THE DIMENSIONS OF THE UNIT LOAD ARE LESS THAN THE DOUBLE TRAY CAP, THE SPACE BETWEEN THE LOAD AND INSIDE OF THE DOUBLE TRAY CAP SHALL BE BLOCKED TO PREVENT SHIFTING OF THE LOAD.

(See 5.4.3.5)

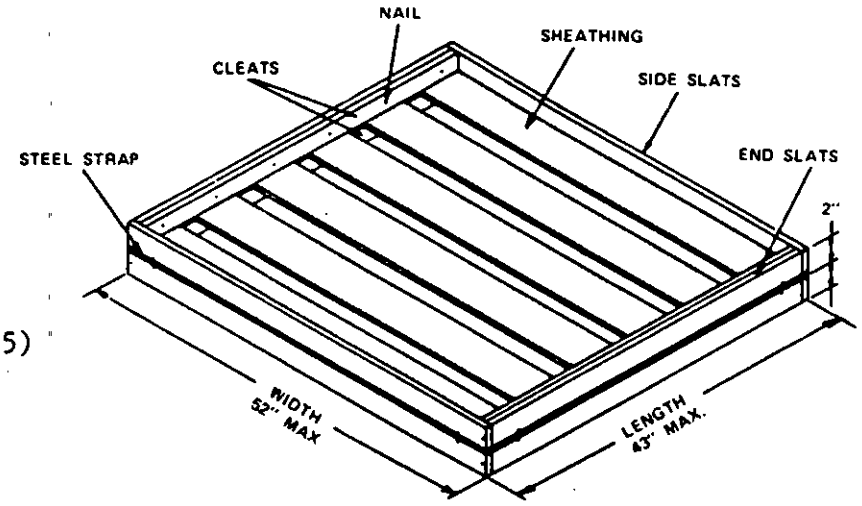

FIGURE 42. Double tray caps.

Source: https://assist.dla.mil -- Downloaded: 2017-02-09T05:28Z
Check the source to verify that this is the current version before use.

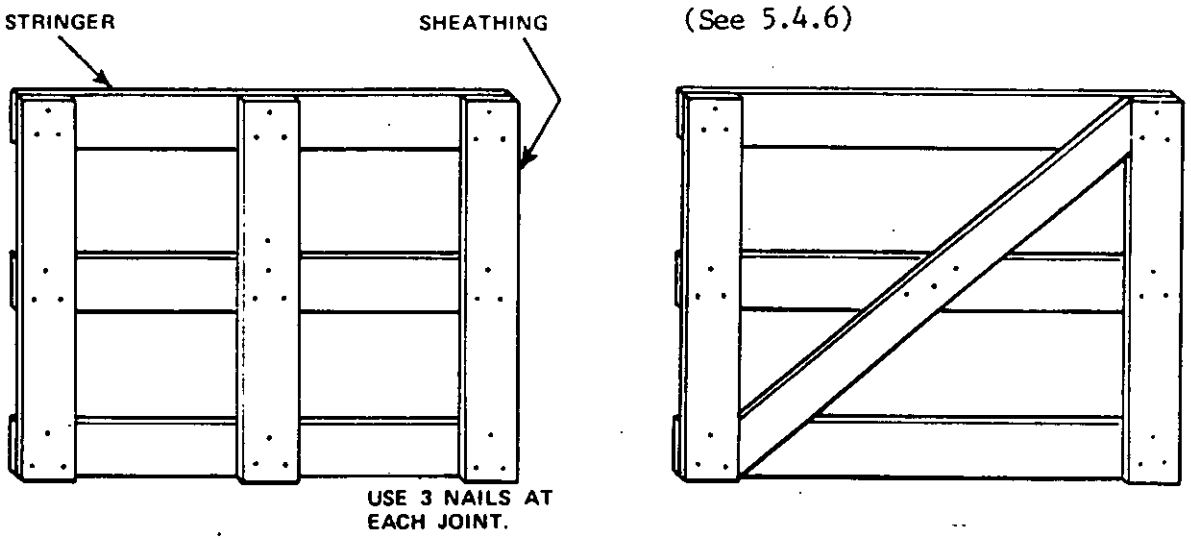

FIGURE 43. Top, side, or end frame (typical).

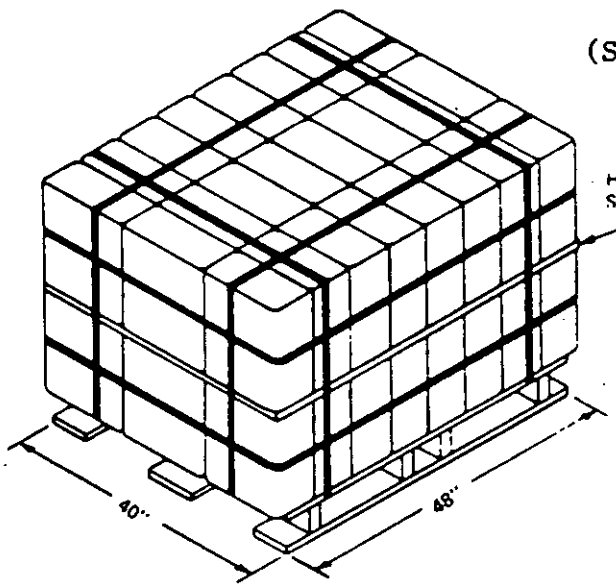

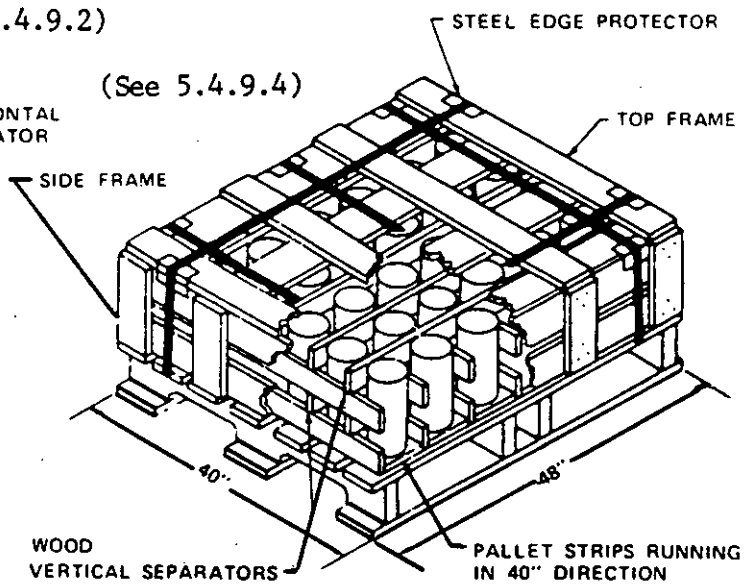

FIGURE 44. Horizontal separator (fiberboard or wood).

FIGURE 45. Vertical wood separator.

Source: https://assist.dla.mil -- Downloaded: 2017-02-09T05:28Z
Check the source to verify that this is the current version before use.

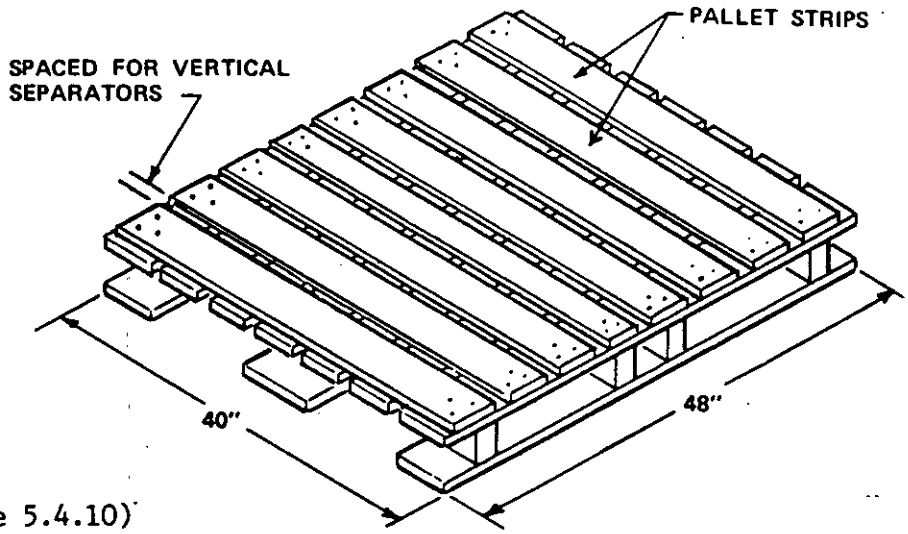

(See 5.4.10)

FIGURE 46. Pallet strips.

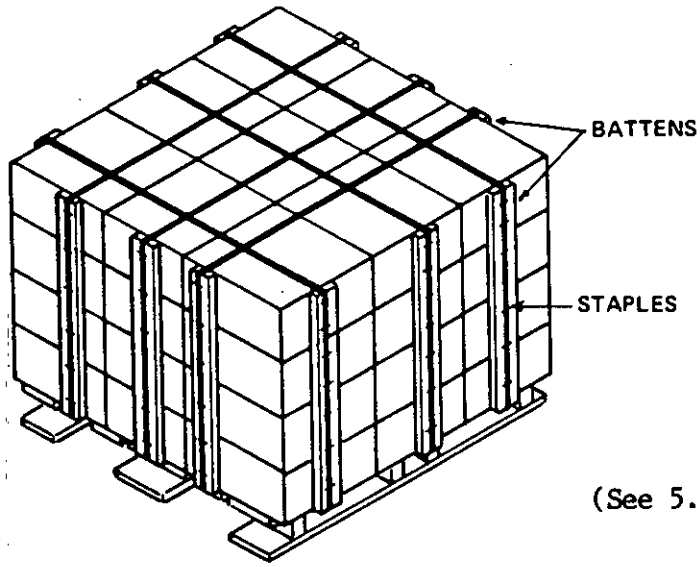

(See 5.4.11.1)

FIGURE 47. Cross-strap battens.

Source: https://assist.dla.mil -- Downloaded: 2017-02-09T05:28Z
Check the source to verify that this is the current version before use.

(See 5.4.11.2)

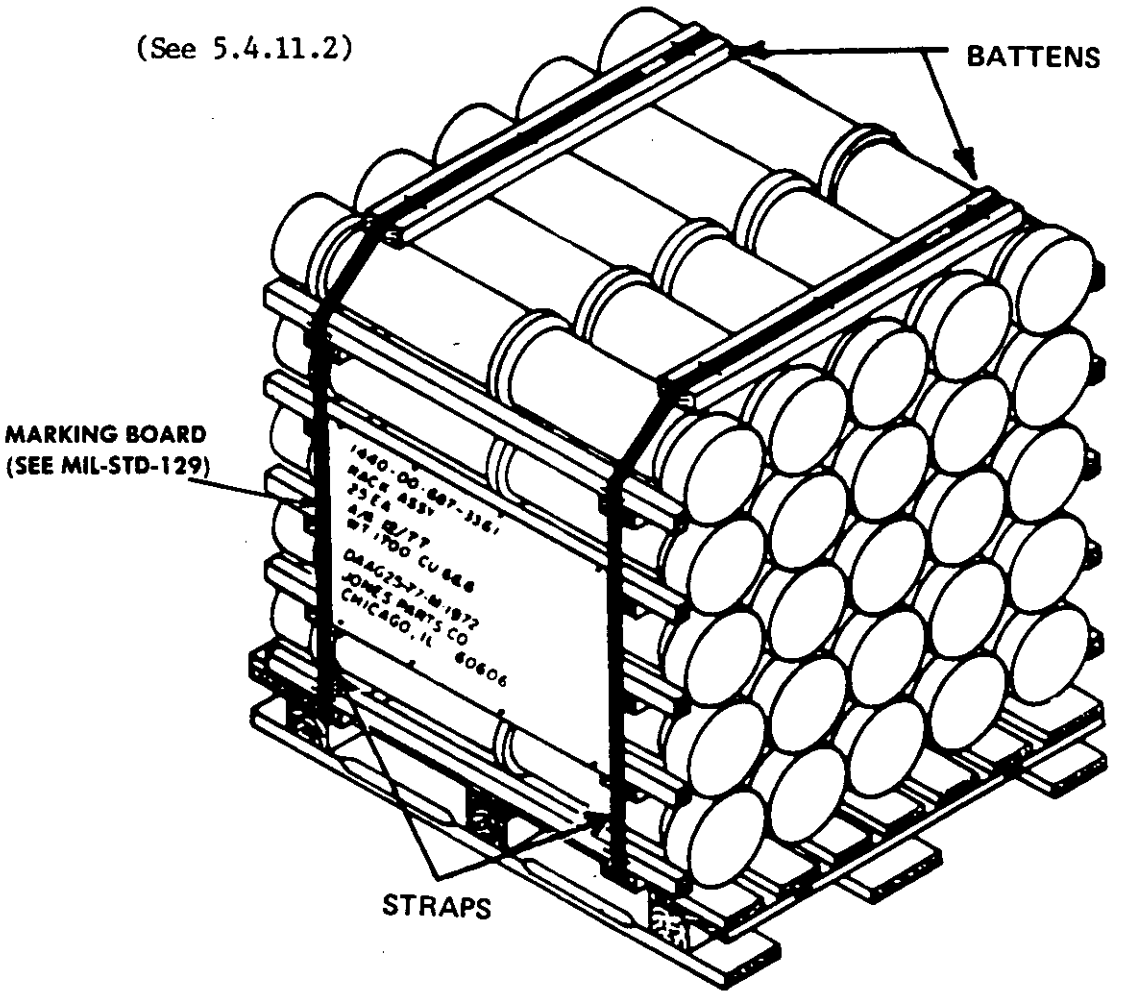

FIGURE 48. Battens under- or over-the-load.

Source: https://assist.dla.mil -- Downloaded: 2017-02-09T05:28Z
Check the source to verify that this is the current version before use.

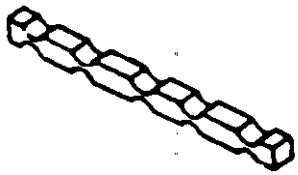

NOTCHED SPACER

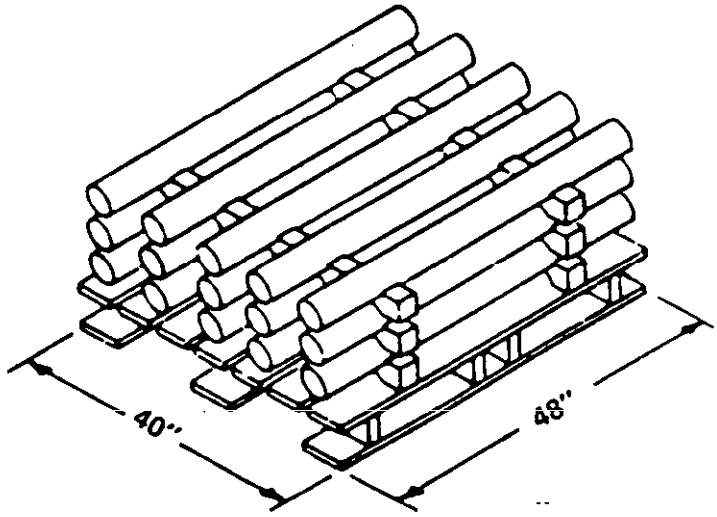

(See 5.4.13)

FIGURE 49. Notched spacers.

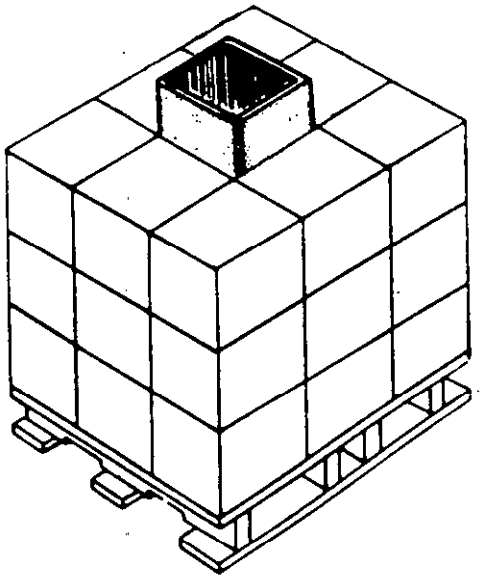

(See 5.4.16)

FIGURE 50. Chimney filler.

Source: https://assist.dla.mil -- Downloaded: 2017-02-09T05:28Z
Check the source to verify that this is the current version before use.

APPENDIX A

CLASSIFICATION OF COMMODITIES OR UNITS BY LOAD TYPE

(see 4.2.4)

10. SCOPE

10.1 Purpose. The various load types, bonding methods, and storage aids associated with palletized unit loads are discussed in detail in section 5. When determining the bonding method(s) and storage aid(s) to be used with a specific load type, many variables associated with the physical characteristics of the commodities or units must be considered. For most commodities or units, there are no right or wrong bonding methods or storage aids to be used. There are usually several combinations available which will provide the necessary unitized load protection. To assist in developing palletized unit loads, the load types, bonding methods, and storage aids are listed in this appendix. In addition, there is a list of commodities, units, and containers with their associated load types and recommended bonding methods and storage aids for use during palletization of the unit load.

20. LOAD TYPES, BONDING METHODS, AND STORAGE AIDS

20.1 Load types. Loads are grouped into load types for the designation of bonding methods and storage aids. The load types are:

a. Load type I - Rectangular wood boxes, metal boxes, or other stable, hard surface units.

b. Load type Ia - Fiberboard boxes stacked in single or multiple layers.

c. Load type II - Rectangular bales or bundles.

d. Load type III - Closed-head, top-nesting, cylindrical or rectangular cans, pails, or buckets utilizing wood caps.

e. Load type IIIa - Same as load type III except that stretch wrap is used instead of wood caps.

f. Load type IV - Cylindrical or rectangular cans or pails with removable covers (i.e., 5-gal, filled, paint cans).

g. Load type V - Nested, empty cans, pails, buckets, etc., and noncovered, internal nesting units.

Source: https://assist.dla.mil -- Downloaded: 2017-02-09T05:28Z
Check the source to verify that this is the current version before use.

h. Load type VI - Flat paper stock or printed matter and rolls of cloth or fabric requiring waterproof wrapping.

i. Load type VII - Storage batteries, window lights, and similar units requiring separator supports.

j. Load type VIII - Rectangular units with irregular surfaces requiring storage aids.

k. Load type IX - Compressed gas cylinders (e.g., oxygen, freon, actylene, etc.).

m. Load type X - Cellular load configurations requiring vertical separators.

n. Load type XI - Reels, spools, coils, or rolls of wire, rope, hose, etc.

p. Load type XII - Heavy, vertically nested kegs, casks, or small drums in a single layer requiring a wood cap over and under the load.

q. Load type XIIa - Drums, kegs, or barrels on a 40- by 48-inch pallet, with an inverted tray and cap having internal dimensions of 41 inches by 46 inches.

r. Load type XIIb - Drums, kegs, or barrels arranged vertically but without caps, suitable for stretch- or shrink-wrap bonding.

s. Load type XIII - Cylindrical units such as rolls of wire and kegs and small drums stacked vertically in multiple layers.

t. Load type XIV - Fiberboard nested packer.

u. Load type XV - Bagged units (units packed in cloth bags, plain paper bags, or lined paper bags) arranged in interlocking layers.

v. Load type XVI - Sectional pallet box (units of great value or extreme fragility).

w. Load type XVII - Unstable, small and odd-shaped units which require a framed load.

x. Load type XVIII - Contents incapable of supporting loads and requiring a minimum framed pallet.

Source: https://assist.dla.mil -- Downloaded: 2017-02-09T05:28Z
Check the source to verify that this is the current version before use.

20.2 Bonding methods. Bonding methods are used to secure units of material and a pallet together into a consolidated and stable load which itself can be handled as a unit. The number of bonding methods has been reduced from 15 to 7 by combining the 7 horizontal strap methods into 1 method (horizontal straps) and the 3 tie-down strap methods into 1 method (tie-down straps). These changes will permit more leeway when selecting the types of horizontal and tie-down straps to be placed on a palletized unit load. The bonding methods are:

a. Bonding method A - Glue stripes.

b. Bonding method B - Glued strips.

c. Bonding method C - Horizontal straps. Horizontal straps may be placed around a load as follows: top layer or single layer, each layer, each layer except the top, bottom of a framed load outside the frame, top of a framed load outside the frame, center of a framed load outside the frame, and one strap at the bottom of a load of compressed cylinders outside the battens. The selection of horizontal straps will vary depending on the load type and physical characteristics of the units comprising the load.

d. Bonding method D - Tie-down straps. There are three types of tie-down straps. Primary tie-down straps pass under the pallet deck in the 40-inch direction. Secondary tie-down straps pass under the pallet deck in the 48-inch direction. Auxiliary tie-down straps are placed on a load after the primary and secondary straps are applied.

e. Bonding method E - Auxiliary load straps. They secure only the load because they pass under the load but not under the pallet deck.

f. Bonding method F - Shrink wrap.

g. Bonding method G - Stretch wrap.

20.3 Storage aids. Storage aids shall always be used when bonding alone is insufficient. They are constructed of paper, PE sheeting, canvas, fiberboard, wood, steel, or other materials. The storage aids are:

a. Storage aid 1 - Metallic edge protector.

b. Storage aid 2 - Nonmetallic edge protector.

Source: https://assist.dla.mil -- Downloaded: 2017-02-09T05:28Z
Check the source to verify that this is the current version before use.

c. Storage aid 3 - Canvas cap.

d. Storage aid 4 - Fiberboard cap.

e. Storage aid 5 - Wood cap.

f. Storage aid 6 - Tray cap.

g. Storage aid 7 - Double tray cap.

h. Storage aid 8 - Canvas cover.

i. Storage aid 9 - Waterproof wrapping.

j. Storage aid 10 - Side frames.

k. Storage aid 11 - Top frame.

m. Storage aid 12 - End frame.

n. Storage aid 13 - Frame supports.

p. Storage aid 14 - Separator supports.

q. Storage aid 15 - Horizontal fiberboard separator.

r. Storage aid 16 - Horizontal wood separator.

s. Storage aid 17 - Separator for nested container.

t. Storage aid 18 - Vertical wood separator.

u. Storage aid 19 - Pallet strips.

v. Storage aid 20 - Cross-strap battens.

w. Storage aid 21 - Under- or over-the-load battens.

x. Storage aid 22 - Oxygen cylinder battens.

y. Storage aid 23 - Gas cylinder battens.

z. Storage aid 24 - Wood collar.

aa. Storage aid 25 - Notched wood spacer.

bb. Storage aid 26 - Sectional pallet box.

Source: https://assist.dla.mil -- Downloaded: 2017-02-09T05:28Z
Check the source to verify that this is the current version before use.

cc. Storage aid 27 - Nested packer.

dd. Storage aid 28 - Chimney filler.

ee. Storage aid 29 - Polyethylene sheeting, 1 mil.

30. CLASSIFICATION OF COMMODITIES AND CONTAINERS

30.1 List of commodities and containers. The following list of commodities or units and containers indicates the classification by load type and also denotes the preferred bonding methods and storage aids to be used with each commodity or unit. Various combinations of bonding methods and storage aids may be used with each palletized unit load predicated on such variables as the size and weight of the units comprising the load, the load type to be used, and the cost to palletize the load. Because of similarities among the load types, some commodities or units may qualify as more than one load type. Because of this, there are no right or wrong combinations. Each palletization effort must be evaluated on its own merit. Bonding methods and storage aids listed in parentheses are to be used to meet specific requirements. These requirements are explained in the paragraphs in section 5 for the specific bonding method or storage aid being considered.

NOTE: Paragraphs 5.3.4.1 and 5.3.4.2 describe bonding methods F (shrink wrap) and G (stretch wrap), respectively. When shrink-wrap bonding is selected, other methods of bonding do not apply. When stretch-wrap bonding is selected, other methods of bonding are not necessary but may be used such as over-the-load straps to bond a unitized load to the pallet.

Commodity or unit	Load type	Bonding methods	Storage aids
Accessories:			
In cartons, without cleats, staples or straps	I,Ia	A,C,D,F,G	1,2,(28),(29)
In other cartons or wood boxes	I,Ia	B,C,D,F,G	(1),2,(28),(29)
In small containers	XVII	C,D,F,G	1,2,10,(11),13
In unstable containers	XVII	C,D	1,2,(5),10
Unboxed, stacked horizontally, tubes, axles, pipe (long narrow items), etc.	XVII	(C),D	1,5,10,(25)

Source: https://assist.dla.mil -- Downloaded: 2017-02-09T05:28Z
Check the source to verify that this is the current version before use.

Commodity or unit	Load type	Bonding methods	Storage aids
Air hose on spools or reels	XI	C,D	(21)
Axes, heads only, boxed	XVII	C,D	1,2,(5),10,(16)
Bags, filled:			
Cloth, including canvas (capable of bonding with straps only, without damage)	XV	(C),D,F,G	(1),2,8,21,(29)
Cloth, stable, subject to damage by straps	XV	C,(D),F,G	(1),2,(8),(21),(29)
Paper, lined, compactible	XV	(A),C,(D),F,G	(1),2,(8),(21),(29)
Paper, lined, noncompactible (stacked on large edge)	XVII	C,D,F,G	1,2,(5),10
Paper or cloth, any type, unstable	XVII	C,D,F	1,2,(5),10
Paper, plain (unlined)	XV	C,(D),F,G	(1),2,(8),(21),(29)
Bales of:			
Bags, cloth or paper (empty)	II	(C),D,F,G	(1),2,(21),(29)
Bags, lined, compactible (empty)	XV	C,(D),F,G	(1),2,(8),(21),(29)
Bags, paper, plain (not lined), (empty)	XV	C,(D),F,G	(1),2,(8),(21),(29)
Bags, scrap (stable)	II	C,D,F,G	1,2,21,(29)
Bags, shredded (stable)	II	C,D,F,G	1,2,(29)
Burlap	II	(C),D,F,G	(1),2,(21),(29)
Cellulose (stable)	II	C,D,F,G	1,2,(29)
Cellulose (unstable)	II	C,D,F,G	21,(29)
Cloth, wiping (stable)	II	C,D,F,G	21,(29)
Cloth, wiping (unstable)	II	C,D,F,G	21,(29)
Excelsior (stable)	II	C,D,F,G	1,2,(29)
Excelsior (unstable)	II	C,D,F,G	21,(29)
Fiber (stable)	II	C,D,F,G	1,2,(29)
Fiber (unstable)	II	C,D,F,G	21,(29)
Fiberboard sheets (labeled)	II	C,D,F,G	1,2,(29)
Fiber caulking (stable)	II	C,D,F,G	1,2,(29)

Source: https://assist.dla.mil -- Downloaded: 2017-02-09T05:28Z
Check the source to verify that this is the current version before use.

Commodity or unit	Load type	Bonding methods	Storage aids
Fiber caulking (unstable)	II	C,D,F,G	21,(29)
Jute, fiber	II	(C),D,F,G	(1),2,(21),(29)
Oakum	II	C,D,G	1,2,21,(29)
Paper, scrap	II	(C),D,F,G	(1),2,(21),(29)
Paper, shredded	II	(C),D,F,G	(1),2,(21),(29)
Rags, wiping (stable)	II	(C),D,F,G	(1),2,(21),(29)
Rags, wiping (unstable)	II	(C),D,F,G	21,(29)
Rope, fiber	II	(C),D,F,G	(1),2,(21),(29)
Batteries, storage, single layer:			
In substantial wood boxes	I	C,D,(E)	(1)
Units not over 11" high	VII	D	(5),(14)
Units over 11" high	VII	(C),D,(E)	(5),(10),(12),(14)
Batteries, packaged dry storage, multiple layers	I	(C),D,(E)	1,2,(5),(28)
Boxes, fiberboard:			
Without cleats, staples or straps	I,Ia	A,C,D,F,G	1,2,(28),(29)
Boxes, multiple-layer loads:			
Metal, lightweight	VIII	C,D	(1),(4),15,(28)
Metal, medium, heavy and extra heavy weight, with nonlevel tops or bottoms	VIII	D	(5),(7)
Metal, medium thru extra heavy weight, with level tops and bottoms	VIII	C,D	(20),(21),(28)
Wood (except containing storage batteries or small glass window lights)	I	B,C,D	(28)
Wood or metal, small size	XVII	(C),D	1,10,(11)
Wood or metal, unstable	XVII	C,D	1,(5);10,13,(16)

Source: https://assist.dla.mil -- Downloaded: 2017-02-09T05:28Z
Check the source to verify that this is the current version before use.

Commodity or unit	Load type	Bonding methods	Storage aids
Boxes, single-layer loads:			
Brick or brick refractories in packages of about 10 bricks each	VIII	(D)	(5),6
Metal (nontapered)	I	C,D	(28)
Metal (tapered)	XIII	D	(5)
Wood	I	B,C,D	(28)
Buckets:			
Inverted, nested	V	C,D	2,(5),17
Unboxed, small size	XVII	(C),D	1,10,(11), 13,(16)
Bundles, rectangular:			
Cloth bags, paper bags or sacks	II	(C),D	1,2,(21)
Fiberboard sheets	II	C,D	1,2
Flat paper stock or printed matter	VI	C,D	(1),2,(5),9, 10
Cans, cylindrical:			
Ash, uncovered, nested	V	C,D	2,(5),17
Electrodes (in side-rimmed cans)	X	C,D	1,10,11,12, 14,18,19
Flared top, top nesting, tapered, multiple layers (see "pails, 5-gal paint type")	IV	D	5,(6)
Garbage, empty, nested, uncovered, inverted	V	C,D	2,(5),17
Non-top nesting, multiple layers	XIII	C,D	(5),(7)
Raised rim, top nesting, nontapered, multiple layers	III	(C),D	(5)
Small sized, unboxed, nesting	XVII	(C),D	(1),2,10, (11),13,(16)
Small sized, unboxed, non-nesting	XVII	C,D	1,2,5,10, (16)
Single layer, nontapered	XIII	C,D	(5)
Single layer, tapered	XIII	D	(5)

Source: https://assist.dla.mil -- Downloaded: 2017-02-09T05:28Z
Check the source to verify that this is the current version before use.

Commodity or unit	Load type	Bonding methods	Storage aids
Cans, rectangular:			
Flared top, top nesting, tapered, multiple layers	IV	D	6
Multiple layers, non-nesting, lightweight	VIII	C,D	1,2,(4),(15)
Non-top nesting, multiple layers, medium, heavy and extra heavy weight, with nonlevel tops and bottoms	VIII	(C),(D)	(5),(7),(15)
Non-top nesting, multiple layers, medium thru extra heavy weight, with level tops and bottoms	VIII	(C),(D)	(15),(20),(21),(28)
Raised rim, top nesting, nontapered, multiple layers	III, IIIa	(C),D,F,G	(5),(29)
Single layer, nontapered	I	C,D	1,2
Single layer, tapered	VIII	D	1,2,(4),(5)
Small sized, unboxed, nesting	XVII	(C),D,G	1,2,10,(11),13
Small sized, unboxed, non-nesting	XVII	C,D	1,2,5,18,19
Cargo net (not boxes):	XVII	(C),D	1,2,(5),10
Cartons, fiberboard:			
Without cleats, staples or straps (see boxes, fiberboard)	I,Ia	A,C,D,F,G	1,2,(28),(29)
Cartons (other):			
Cloth in rolls (excluding duck) stacked horizontally	VI	C,D,F,G	1,2,(5),9 10,29
Cloth, wire screening in rolls, vertical	XIII	D,F,G	(5),(7),29
Electrodes in cartons	I	B,C,D,F,G	1,2,(28)
Fire extinguishers, portable	XVII	(C),D	1,2,(5),10,(16)

Source: https://assist.dla.mil -- Downloaded: 2017-02-09T05:28Z
Check the source to verify that this is the current version before use.

Commodity or unit	Load type	Bonding methods	Storage aids
Flat paper stock or printed matter in cartons or boxes with inner waterproof protection:			
Cartons without cleats, staples, or straps	I,Ia	A,(C),(D),F	1,2,(28),(29)
Other waterproof cartons or wood boxes	I,Ia	B,(C),(D)	(1),2,(28),(29)
Packed any method (not waterproof)	VI	C,D	1,2,(5),9,10
Unstable or narrow and short	XVII	(C),D	1,2,(5),10
Coils:			
Jute, in coils, unboxed	XI	C,(D)	(5),(11),(21)
Rope, large coils	XI	C,(D)	(5),(11),(21)
Rope, small coils	XI	C,(D)	(5),(11),(21)
Rope, stable coils	XI	C,(D)	(5),(11),(21)
Rope, unstable coils	XVII	(C),D	1,(5),10
Wire rope, unboxed (not on reels)	XVII	(C),D	1,(5),10
Wire (not wire rope) not reeled, unboxed	XVII	(C),D	1,(5),10
Cylinders:			
Stacked horizontally in a load:			
Axles, unboxed	XVII	(C),D	1,(5),10,(25)
Concrete pipe, small	XVII	(C),D	1,(5),10 (25)
Soil pipe, small	XVII	(C),D	1,(5),10 (25)
Stacked upright in load:			
Carbon-dioxide, small	XVII	(C),(D)	1,(5),10
Compressed gas:			
Acetylene	IX	C,(D)	(21),23,24
Freon	IX	C,(D)	(21),23,24
Oxygen	IX	C,(D)	(21),23,24

Source: https://assist.dla.mil -- Downloaded: 2017-02-09T05:28Z
Check the source to verify that this is the current version before use.

Commodity or unit	Load type	Bonding methods	Storage aids
Cylinders not over 20" long, multiple layers	XVII	(C),D	1,10,11,13, (16)
Other cylinders	XVII	(C),D	1,(5),10, (25)
Drums, filled: (Usually 30-gal size or less, excluding 55-gal size):			
Metal or nonmetal, non-tapered, without bilges, single layer	XII, XIIa, XIIb	D,F,(G)	1,2,(5),(15) (29)
Metal or nonmetal, tapered or with bilges, single layer	XII, XIIa, XIIb	D,F,(G)	1,2,(5),(15) (29)
Metal or nonmetal, multiple layers	XIII	D,F,G	1,2,(5),(7)
Drums or barrels, 55-gal size, filled or empty	XIIa, XIIb	C,(D),(F)	1,2,(5)
Fiberboard sheets, noncontained	VIII	C,D	1,2,(10), (11)
Gas, compressed (stacked horizontally):			
Other (in cylinders not exceeding load limits or not restricted to vertical placement)	XVII	(C),D	1,(5),10 (25)
Glass, window lights:			
Single layer, stacked on edge	VII	C,D	1,2,(5),(14)
Small panes in wood boxes (not crates)	I	C,D,(E)	1,2
Glass, panes packed otherwise:			
Large panes	VII	D	1,2,(5)
Small panes, units not over 11" high	VII	D	(5),(14)
Small panes, units over 11" high	VII	(C),D	(5),(10), (12),(14)

Source: https://assist.dla.mil -- Downloaded: 2017-02-09T05:28Z
Check the source to verify that this is the current version before use.

Commodity or unit	Load type	Bonding methods	Storage aids
Hose:			
In cartons without cleats, staples, or straps	I	A,C,D	1,2,(28)
In unstable cartons or boxes	XVII	(C),D	1,2,(5),10
In wood boxes or cartons with cleats, etc.	I	B,C,D	(1),(28)
Unboxed, on reels or spools	XI	C,(D)	(5),(11),(21)
Items of great value	XVI	D	(15),(17),26
Kegs, wooden heavy: (in staggered, nested rows):			
Nails (1 layer load) (see "nails in cartons or boxes")	XII, XIIa, XIIb	D,F,(G)	(5),(15),(29)
Nuts, bolts, washer (1 layer load)	XII, XIIa, XIIb	D,F,(G)	(5),(15)(29)
Kerosene in rectangular cans, unboxed	VIII	C,D	(15),(20),(21)
Kits, portable, oxyacetylene welding, multiple layers (stacked on kit bottom)	VIII	(C),D	(20),(21),(28)
Kits, portable, oxyacetylene welding, single layer (stacked on kit bottom)	I	C,D	(21),(28)
Liquids or semiliquids: (In noncontained, cylindrical cans or pails):			
Multiple layers, non-top nesting	XIII	D	(5),(7)
Single layer, nontapered	XVI	C,D	5,(15)
Single layer, tapered	XIII	D	(5),(7)
Small size, unboxed	XVII	(C),D	1,2,10,(11),13,(16)

Source: https://assist.dla.mil -- Downloaded: 2017-02-09T05:28Z
Check the source to verify that this is the current version before use.

Commodity or unit	Load type	Bonding methods	Storage aids
Top nesting, multiple layers, closed top	III, IIIa	(C),D,F,G	(5),(29)
Top nesting, multiple layers (see "pails, 5-gal paint type, removable cover")	IV	D	6
In noncontained, rectangular cans:			
Multiple layers, medium, heavy and extra heavy weight, with nonlevel tops and bottoms	VIII	D	(5),(7)
Multiple layers, medium thru extra heavy weight, with level tops and bottoms	VIII	(C),D	(20),(21),(28)
Single layer, nontapered	I,Ia	C,D,G	1,2,(29)
Single layer, tapered	VIII	D,G	(5)
Small size, unboxed	XVII	(C),D	1,2,10,(11),13,(16)
Top nesting, raised rims, multiple layers, closed head	III, IIIa	(C),D,F,G	(5),(29)
In pails in cartons with cleats, staples or straps or in wood boxes	I,Ia	B,(C),(D),G	(1),(2),(28),(29)
In pails in cartons without cleats, staples, or straps	I,Ia	A,(C),(D),G	1,(2),(28),(29)
Pails, 5-gal paint type, removable cover	IV	D	6
Metal sheeting in rolls:			
Stacked horizontally, long	XVII	(C),D	1,(5),10
Stacked vertically, long, on end	XIII	D	(5)
Stacked vertically, short, on end	XIII	D	(5),(7)

Source: https://assist.dla.mil -- Downloaded: 2017-02-09T05:28Z
Check the source to verify that this is the current version before use.

Commodity or unit	Load type	Bonding methods	Storage aids
Nails, in cartons or boxes, single-layer loads (see "kegs" for alternate load type)	I,Ia	C,D,F,G	1,2,(29)
Packing, rubber, in rolls, unboxed (horizontal)	XVII	(C),D	1,2,(5),10
Pails:			
Cartons with cleats, staples, or straps, or in wood boxes (not crates)	I	B,(C),D	(1),(2),(28),(29)
Cartons without cleats, staples, or straps	I	A,(C),D	1,2,(28),(29)
5-gal paint type, removable cover	IV	D	(6)
Multiple layers, non-top nesting	XIII	D	(5),(7)
Single layer, except small, nontapered	XIII	C,D	(5)
Single layer, except small, tapered	XIII	D	(5)
Small sized, unboxed	XVII	(C),D	1,2,10,(11),13,(16)
Top nesting, flared top, tapered, multiple layers (see "pails, 5-gal paint type, removable cover")	IV	D	(6)
Top nesting, raised rim, multiple layers, nontapered	III, IIIa	(C),D,F,G	(5),(29)
Unboxed, without covers, inverted, internal nested (empty)	V	C,D	1,2,(5),17
Paper:			
Building paper in rolls, long, on end	XVII	D	(5)
Building paper in rolls, short, on end	XIII	D	(5),(7)

Source: https://assist.dla.mil -- Downloaded: 2017-02-09T05:28Z
Check the source to verify that this is the current version before use.

Commodity or unit	Load type	Bonding methods	Storage aids
Flat paper stock or printed matter in cartons or wood boxes with inner waterproof protection:			
Cartons having cleats, staples, or straps (waterproof)	I,Ia	B,(C),(D),F	(1),(2),(28),(29)
Cartons without cleats, staples, or straps (waterproof)	I,Ia	A,(C),(D),F	1,2,(28),(29)
Packaged any method, not waterproof	VI	(C),D	1,2,(5),9,(10)
Wrapping paper, in rolls, long, on end	XIII	D,F,G	1,2,(5),(7),9
Wrapping paper, in rolls, short, on end	XIII	D	1,2,(5),(7),9
Printed matter (books, pamphlets, etc.):			
In cartons or wood boxes with inner waterproof protection:			
Cartons with cleats, staples, or straps, or in wood boxes	I,Ia	B,(C),(D),F	(1),(2),(28),(29)
Cartons without cleats, staples, or straps	I,Ia	A,(C),(D),F	1,2,(28),(29)
Packed any method, not waterproof	VI	(C),D	1,2,(5),9,(10)
Provisions in bags:			
Cloth, liable to damage by strapping	XV	C,(D),F,G	(1),2,8,(21),(29)
Cloth, other	XV	C,D	(1),2,8,21
Paper, lined, compactible	XV	(A),C,(D),F,G	(1),2,8,(21),(29)
Paper, plain (unlined)	XV	C,(D),F,G	(1),2,8,(21),(29)
Provisions in cartons:			
In wood boxes	I	B,C,D	(1),(28)
Other boxes	I,Ia	B,C,D,F	(1),2,(28)
Without cleats, staples, or straps	I,Ia	A,C,D,F	(1),2,(28)

Source: https://assist.dla.mil -- Downloaded: 2017-02-09T05:28Z
Check the source to verify that this is the current version before use.

Commodity or unit	Load type	Bonding methods	Storage aids
Provisions in cans:			
Cylindrical, multiple layers	XIII	C,D	(5),(7)
Cylindrical, single layer, nontapered	XIII	C,D	(5)
Cylindrical, single layer, tapered	XIII	D	(5)
In nonlevel packages or containers (fiberboard, burlap, or paper)	XVII	C,D	1,(5),10
In wooden buckets or tubs, cylindrical (usually tapered)	XIII	D	(5),(7)
Rectangular, multiple layers, lightweight units	VIII	C,D	1,2,(4),(15)
Rectangular, multiple layers, medium, heavy, and extra heavy units, with nonlevel tops and bottoms	VIII	(C),(D)	(5),(7),(15)
Rectangular, multiple layers, medium thru extra heavy units, with level tops and bottoms	VIII	(C),(D)	(15),(20),(21),(28)
Rectangular, single layer, nontapered	I	C,D	1,2
Rectangular, single layer, tapered	VIII	D	1,2,(4),(5)
Small sized cans, any type	XVII	(C),D,G	1,2,10,(11),13,(16)
Unstable cans, any type	XVII	(C),D	1,(5),10,(16)
Reels or rolls of:			
Barbed wire, large	XI	C,(D)	(5),(11),(21)
Barbed wire, small	XI	C,(D)	(5),(11),(21)
Electrical wire or cable	XI	C,(D)	(5),(11),(21)
Seizing wire	XI	C,(D)	(5),(11),(21)
Wire rope	XI	C,(D)	(5),(11),(21)

Source: https://assist.dla.mil -- Downloaded: 2017-02-09T05:28Z
Check the source to verify that this is the current version before use.

Commodity or unit	Load type	Bonding methods	Storage aids
Rolls of:			
Building paper, long, on end	XVII	D	(5)
Building paper, short on end	XIII	D	(5),(7)
Canvas (duck) in rolls, long, on end	XVII	D,F,G	(5)
Canvas (duck) in rolls, short, on end	XIII	D,F,G	(5),(7)
Cloth, unboxed, stacked horizontally	VI	(C),D	1,2,(5),9,10
Netting wire, unboxed:			
Stacked horizontally	XVII	(C),D	1,2,(5),10
Stacked vertically	XIII	D	(5),(7)
Rubber packing or sheeting in rolls, unboxed, stacked horizontally	XVII	(C),D	1,2,(5),10
Screening, wire cloth, in rolls, boxed:			
Stacked horizontally	XVII	(C),D	1,2,(5),10
Stacked vertically	XIII	D,F,G	4,8,29
Screening, wire cloth, in rolls, unboxed:			
Stacked horizontally	XVII	(C),D	1,(5),10
Stacked vertically	XIII	D	(5),(7)
Screening, wire cloth, not in rolls, unboxed:			
Stacked horizontally	XVII	C,D,F,G	1,(5),10,29
Stacked vertically	XIII	D,F,G	(5),(7),29
Sheeting, metal, unboxed:			
Stacked horizontally	XVII	(C),D	1,(5),10
Stacked vertically	XIII	D	(5),(7)
Wrapping paper, long, on end	XIII	D,F,G	1,2,(5),(7), 9
Wrapping paper, short, on end	XIII	D,F,G	1,2,(5),(7), 9
Spare parts or tools:			
In cartons with cleats, staples, or straps, or in wood boxes (not crates)	I,Ia	B,C,D,F	(1),(2),(28)
In cartons without cleats, staples, or straps	I,Ia	A,C,D,F,G	1,2,(28), (29)

Source: https://assist.dla.mil -- Downloaded: 2017-02-09T05:28Z
Check the source to verify that this is the current version before use.

Commodity or unit	Load type	Bonding methods	Storage aids
In metal boxes (spare parts or tools):			
Lightweight	VIII	C,D	1,4,15,(28)
Multiple layers, medium, heavy, and extra heavy weight, with nonlevel tops and bottoms	VIII	D	(5),(7)
Multiple layers, medium thru extra heavy weight, with level tops and bottoms	VIII	C,D	(20),(21) (28)
Not boxed, cylindrical or long and narrow	XVII	(C),D	1,(5),10,25
Not boxed, large, odd-shaped	XVII	(C),D	1,(5),10, (16)
Single layer, nontapered	I	C,D	1,2,(28)
Single layer, tapered	XIII	D	(5),(7)
Small sized	XVII	(C),D	1,10,(11), 13,(16)
Unstable containers (spare parts or tools)	XVII	(C),D	1,(5),10
Tubs, wash, unboxed, inverted nested	V	C,D	2,5,17

Source: https://assist.dla.mil -- Downloaded: 2017-02-09T05:28Z
Check the source to verify that this is the current version before use.

APPENDIX B

LOAD PATTERN SELECTION

(see 5.1)

10. SCOPE

10.1 Purpose. Shipping containers in each palletized unit load shall be uniformly arranged in a load pattern as determined by table III, pages 84 through 86, and shown in figure 51, pages 87 through 90. When the size of the individual shipping container does not fit any of the load patterns of table III, the proposed load pattern or request to use a different size pallet shall be submitted to the contracting officer for approval. This is only required when the contract calls for palletizing in accordance with MIL-STD-147; otherwise, this type deviation would not be in violation of MIL-STD-147 requirements.

20. DETERMINATION OF LOAD PATTERN

20.1 Use of table III. The following steps shall be followed when using table III:

a. Determine the length and width of the individual shipping container to the nearest half inch.

b. Locate the length of the container at the top of the table and the width of the container at the left side of the table. The container pattern number shall be found at the intersection of the two columns. Height may be substituted for width or length when the containers are of sufficient strength to withstand superimposed loads, and where such placement will cause no adverse effect in the shipment or storage of the materiel.

c. Where no pattern is listed, the area efficiency is below 80 percent and palletization cannot be accomplished by these methods (see sec 5).

20.2 Use of figure 51. After determining the container pattern number from table III, the corresponding load pattern may be found in figure 51. This load pattern will be used when constructing the palletized unit load. Void spaces, marked by dark areas, should be filled with dunnage or with a storage aid such as a chimney filler.

Source: https://assist.dla.mil -- Downloaded: 2017-02-09T05:28Z
Check the source to verify that this is the current version before use.

TABLE III. Load pattern determination

INCHES IN LENGTH

INCHES IN WIDTH	6	6½	7	7½	8	8½	9	9½	10	10½	11	11½	12	12½	13	13½	14	14½	15	15½	16	16½	17	17½	18	18½	19	19½	20	20½	21	21½
6	122	122	118	115	115	115	71	771	111	120		65	65	60	106	106	44	45	45	62	100	100	100	78	78	78	78	78	76	76	76	76
6½		121	121	67	67	67	24	61	61	120	65	65	38	63	63	75	75	62	62	58	58	58	58	47	47	19	19	119	42	42	42	42
7			117	66	59	114	24	110	110	116	49	49	49	105	75	75	75	39	99	99	99	99	99	19	19	19	19	42	42	42	42	42
7½					113	113	64	64	64	74	25	25	57	57	57	73	73	73			27	27	27	77	77	77	72	72	72	72	72	72
8					113	113	64	64	23	74	25	25	22	22	22	44	44		27	27	27	27	27	77	77	72	72	72	72	30	30	30
8½						113	74	74	109	112	25	25	22	22	22	44	44	27	27	27	27	27	98	72	72	30	30	30	30	30	30	30
9									108	106	48	21	21	21	20	18	18	15	15	15	15	14	97						26	26	26	
9½									108	108	48	21	20	20	20	18	18	14	14	14	14	14	97				26	26	26	26	26	26
10										108	21	21	20	20	17	17	17	14	14	14	14	14	97			26	26	26	26	26	26	36
10½											104	104	104	104	104	17	16	29	29	12	12	97	97	26	26	26	26	26	26	26		82
11																	28	28	28	11	11	9	9	26	26	26	26	8	8	8	102	102
11½															28	28	28	28	11	11	9	9	9	26	8	8	8	8	8	102	102	102
12															28	28	28	13	11	11	9	9	9	8	8	8	8	7	7	102	102	102
12½															28	28	13	11	11	9	9	9	9	8	7	7	7	7	102	102	102	102
13															13	103	103	11	11	9	9	9	9	7	7	7	7	7	102	102	102	102
13½																			37	37	37	96	96	7	7	7	7	5	5	5	5	5
14																		37	37	91	91	91	91	7	7	7	7	5	5	5	5	5
14½																															4	4
15																													4	4		
15½																													4	4	4	95
16																													4	95	95	95
16½																									4	4	4	95	95	95	95	95
17																									4	95	95	95	95	95	95	95
17½																																
18																																
18½																																
19																																
19½																																
20																																
20½																																
21																																6
21½																																
22																																
22½																																
23																																
23½																																
24																																
24½																																
25																																
25½																																
26																																
26½																																
THRU																																
34																																
34½																																
35																																
35½																																
36																																
36½																																
37																																
37½																																
38																																
38½																																
39																																
39½																																
40																																
40½																																
41																																
41½																																
42																																
42½																																
43																																

Source: https://assist.dla.mil -- Downloaded: 2017-02-09T05:28Z
Check the source to verify that this is the current version before use.

TABLE III. Load pattern determination - Continued

INCHES IN LENGTH

INCHES IN WIDTH	22	22½	23	23½	24	24½	25	25½	26	26½	27	27½	28	28½	29	29½	30	30½	31	31½	32	32½	33	33½	34	34½	35	35½	36	36½	37	37½
6	43	43	56	56	56	56	34	34	34	81	81	81				10	10	10	70	70	70	70	70	70	70	55	55	55	55	55	55	124
6½	56	56	56	56	34	34	34	34	34			10	10	10	10	10	10		80	80	80	80	80	55	55	55	55	55	55	55	69	69
7	41	41	33	33	33	93	93	93	10	10	10	10	10	10	10	80	80	80	80		54	54	54	54	54	54	54	54	54	69	69	69
7½	40				10	10	10	10	10	10	10	10	10												68	68	68	68	68	68	68	50
8	40	10	10	10	10	10	10	10	10	10	10														68	68	68	68	68	50	50	50
8½	10	10	10	10	10	10	10	10	10								68	68	68	68	68	68	68	68	68	68	50	50	50	50	50	50
9		36	36	36	36	36	36	92	92														35	35	53							
9½	36	36	36	36	92	92	92	92	92											35	35	35	35	55								
10	36	36	36	92	92	92	92	92	92								35	35	35	35	35	53	53						31	31	31	31
10½	92	92	92	92	92	92	92	92	92					35	35	35	35	35	35						31	31	31	31	31	31	31	31
11											35	35	35	35	35	35	35															
11½									35	35	35	35	35	35	35					79												
12								35	35	35	35	35	35				79	79	79													2
12½					35	35	35	35	35	35	35			79	79	79	79	79											2	2	2	2
13			35	35	35	35	35	35	35		79	79	79	79	79	79	79									2	2	2	2	2	2	2
13½	32	32	32	32	32	32	32	91	91														2	2	2	2	2	2	2	2	2	2
14	32	32	32	32	32	91	91	91	91												2	2	2	2	2	2	2	2	2	2	2	2
14½							3	3	3																							
15					3	3	3	3	3																							
15½			3	3	3	3	3	3	3																							
16		3	3	3	3	3	3	3	3																							94
16½	3	3	3	3	3	3	3	3	3																				94	94	94	94
17	3	3	3	3	3	3	3	3																			94	94	94	94	94	94
17½								90	90																1							
18							6	90	90															1	1							
18½						6	90	90	90													1	1	1								
19				6	6	90	90	90	90											1	1	1	1									
19½			6	90	90	90	90	90	90									1	1	1	1	1										
20		6	6	90	90	90	90	90	90								1	1	1	1	1											
20½	6	6	90	90	90	90	90	90	90						1	1	1	1	1	1												
21	6	90	90	90	90	90	90	90	90					1	1	1	1	1	1													
21½													1	1	1	1	1	1														
22																																
22½																																
23																																
23½																																
24																																89
24½																														89	89	89
25																													89	89	89	89
25½																											89	89	89	89	89	89
26																										89	89	89	89	89	89	89
26½																																
THRU																																
34																																
34½																																
35																																
35½																																
36																																
36½																																
37																																
37½																																
38																																
38½																																
39																																
39½																																
40																																
40½																																
41																																
41½																																
42																																
42½																																
43																																

Source: https://assist.dla.mil -- Downloaded: 2017-02-09T05:28Z
Check the source to verify that this is the current version before use.

TABLE III. Load pattern determination - Continued

INCHES IN LENGTH

INCHES IN WIDTH	38	38½	39	39½	40	40½	41	41½	42	42½	43	43½	44	44½	45	45½	46	46½	47	47½	48	48½	49	49½	50	50½	51	51½	52
6	124	124	124	124	124	52	52	52	52	52	52	123	123	123	123	123	123	123	123	123	123	123	123	123	123	123	123	123	123
6½	69	69	69	51	51	51	51	51	51	51	51						88	88	88	88	88	88	88	88	88	88	88	88	88
7	69	51	51	51	51	51	51	51	51	51	51	88	88	88	88	88	88	88	88	88	88	88	88	88	88	88	88	88	88
7½	50	50	50	50	50	50	50	50	50	50	50										87	87	87	87	87	87	87	87	87
8	50	50	50	50	50	50	50	50	50	50	50				87	87	87	87	87	87	87	87	87	87	87	87	87	87	87
8½	50	50	50	50	50	50	50	50	50	50	50	87	87	87	87	87	87	87	87	87	87	87	87	87	87	87	87	87	87
9					31	31	31	31	31	31	31														86	86	86	86	86
9½	31	31	31	31	31	31	31	31	31	31	107									86	86	86	86	86	86	86	86	86	86
10	31	31	31	31	31	31	31	31	31	107	107				86	86	86	86	86	86	86	86	86	86	86	86	86	86	86
10½	31	31	31	31	31	31	31	31			86	86	86	86	86	86	86	86	86	86	86	86	86	86	86	86	86	86	86
11							2	101	101	101	101																		
11½			2	2	2	2	101	101	101	101	101																		85
12	2	2	2	2	2	101	101	101	101	101	101														85	85	85	85	85
12½	2	2	2	2	101	101	101	101	101	101	101										85	85	85	85	85	85	85	85	85
13	2	2	101	101	101	101	101	101	101	101	101						85	85	85	85	85	85	85	85	85	85	85	85	85
13½	2												85	85	85	85	85	85	85	85	85	85	85	85	85	85	85	85	85
14	2										94	85	85	85	85	85	85	85	85	85	85	85	85	85	85	85	85	85	85
14½							94	94	94	94	94																		
15					94	94	94	94	94	94	94																		
15½		94	94	94	94	94	94	94	94	94	94																		
16	94	94	94	94	94	94	94	94	94	94	94																		
16½	94	94	94	94	94	94	94	94	94	94	94																		
17	94	94	94	94	94	94	94	94	94	94	94																		
17½																											84	84	84
18																									84	84	84	84	84
18½																						84	84	84	84	84	84	84	84
19																				84	84	84	84	84	84	84	84	84	84
19½																	84	84	84	84	84	84	84	84	84	84	84	84	84
20															84	84	84	84	84	84	84	84	84	84	84	84	84	84	84
20½													84	84	84	84	84	84	84	84	84	84	84	84	84	84	84	84	84
21											84	84	84	84	84	84	84	84	84	84	84	84	84	84	84	84	84	84	84
21½									89	89	84	84	84	84	84	84	84	84	84	84	84	84	84	84	84	84	84	84	84
22							89	89	89	89	89																		
22½					89	89	89	89	89	89	89																		
23			89	89	89	89	89	89	89	89	89																		
23½	89	89	89	89	89	89	89	89	89	89	89																		
24	89	89	89	89	89	89	89	89	89	89	89																		
24½	89	89	89	89	89	89	89	89	89	89	89																		
25	89	89	89	89	89	89	89	89	89	89	89																		
25½	89	89	89	89	89	89	89	89	89	89	89																		
26	89	89	89	89	89	89	89	89	89	89	89																		
26½																													
THRU																													
34																													
34½																													83
35																											83	83	83
35½																										83	83	83	83
36																									83	83	83	83	83
36½																								83	83	83	83	83	83
37																						83	83	83	83	83	83	83	83
37½																					83	83	83	83	83	83	83	83	83
38																			83	83	83	83	83	83	83	83	83	83	83
38½																		83	83	83	83	83	83	83	83	83	83	83	83
39																	83	83	83	83	83	83	83	83	83	83	83	83	83
39½																83	83	83	83	83	83	83	83	83	83	83	83	83	83
40															83	83	83	83	83	83	83	83	83	83	83	83	83	83	83
40½													83	83	83	83	83	83	83	83	83	83	83	83	83	83	83	83	83
41												83	83	83	83	83	83	83	83	83	83	83	83	83	83	83	83	83	83
41½											83	83	83	83	83	83	83	83	83	83	83	83	83	83	83	83	83	83	83
42										83	83	83	83	83	83	83	83	83	83	83	83	83	83	83	83	83	83	83	83
42½									83	83	83	83	83	83	83	83	83	83	83	83	83	83	83	83	83	83	83	83	83
43									83	83	83	83	83	83	83	83	83	83	83	83	83	83	83	83	83	83	83	83	83

Source: https://assist.dla.mil -- Downloaded: 2017-02-09T05:28Z
Check the source to verify that this is the current version before use.

(See 20.2)

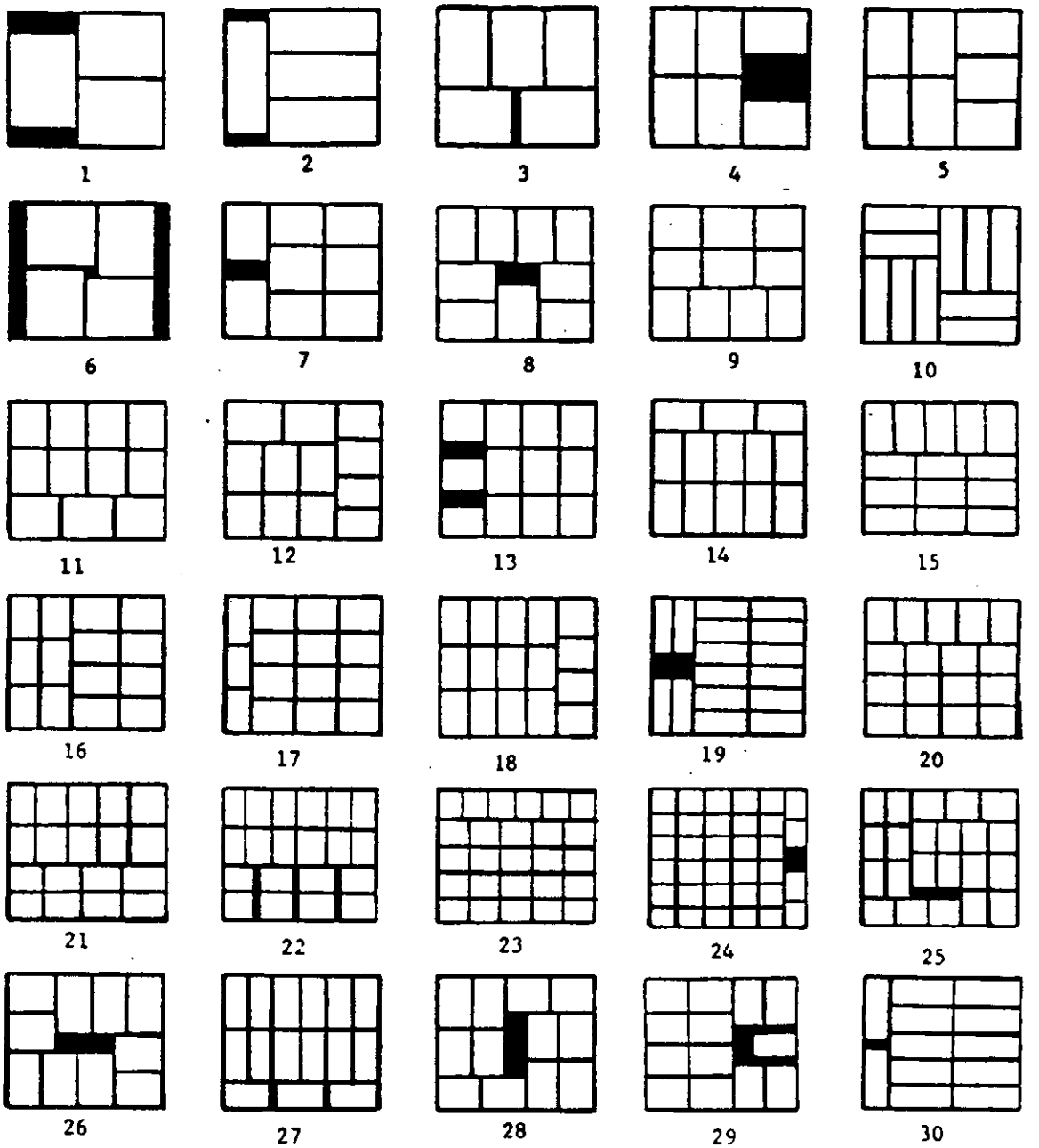

FIGURE 51. Load patterns on 40" by 48" pallets.

Source: https://assist.dla.mil -- Downloaded: 2017-02-09T05:28Z
Check the source to verify that this is the current version before use.

(See 20.2)

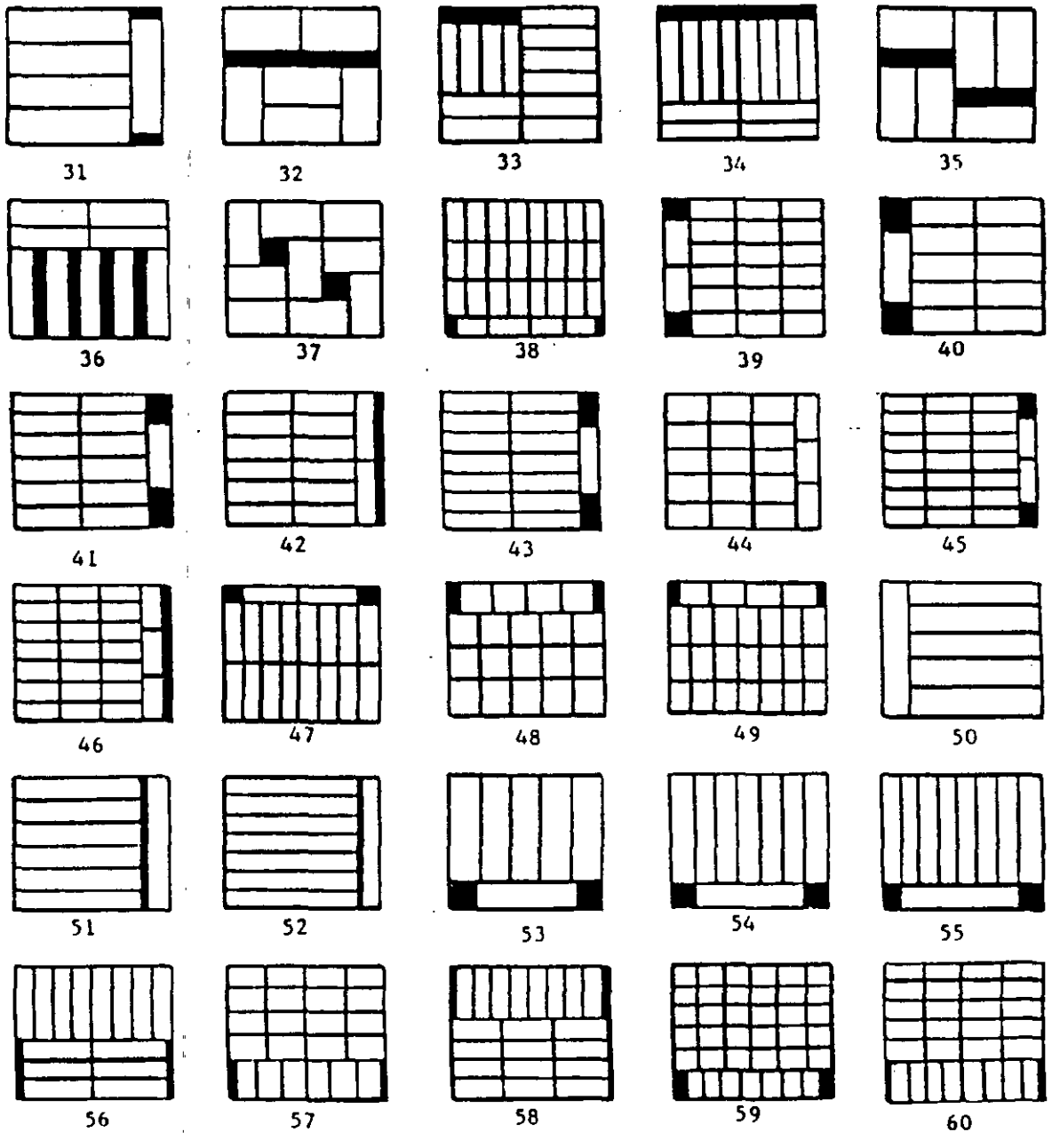

FIGURE 51. Load patterns on 40" by 48" pallets - Continued.

Source: https://assist.dla.mil -- Downloaded: 2017-02-09T05:28Z
Check the source to verify that this is the current version before use.

(See 20.2)

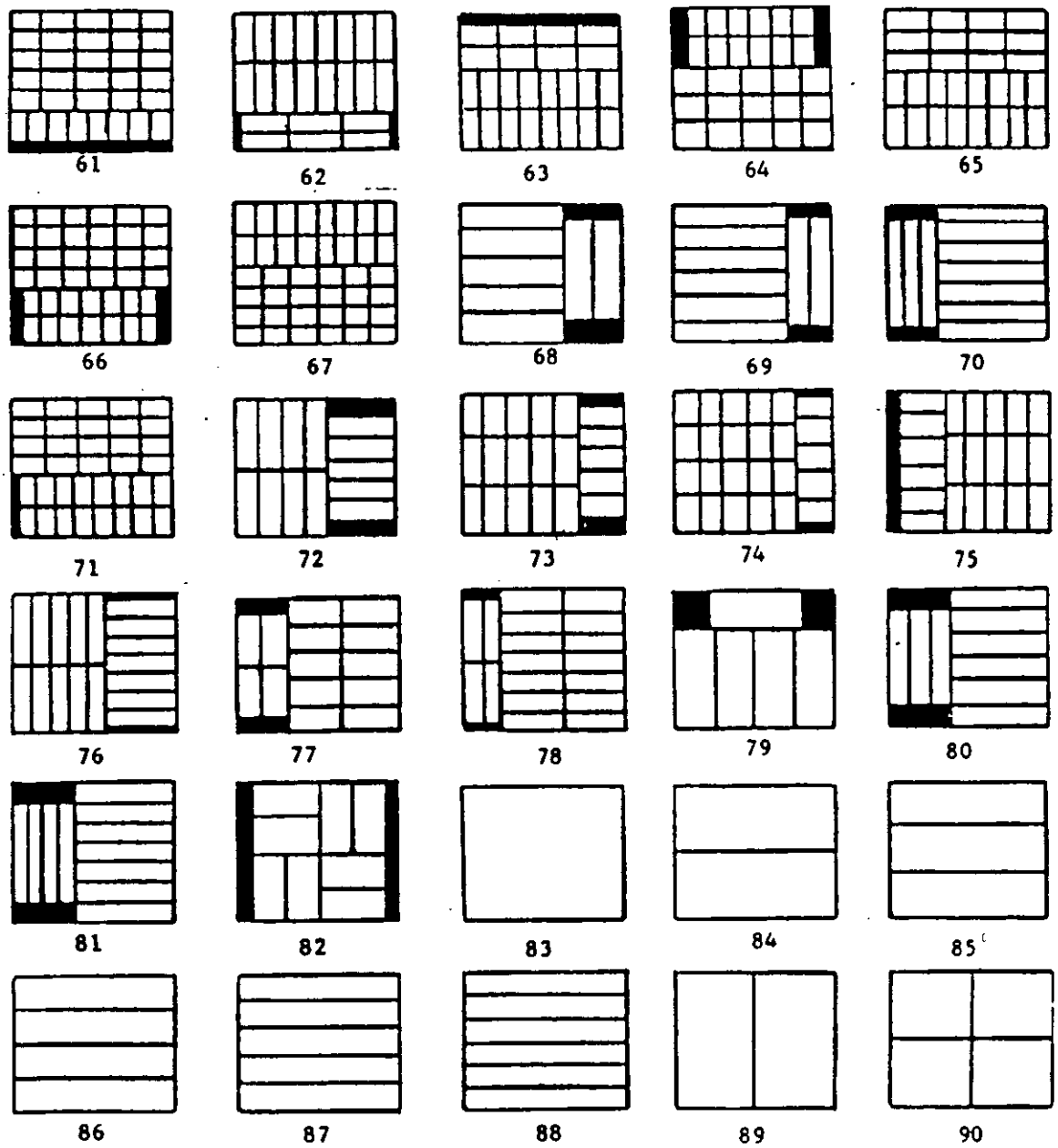

FIGURE 51. Load patterns on 40" by 48" pallets - Continued.

Source: https://assist.dla.mil -- Downloaded: 2017-02-09T05:28Z
Check the source to verify that this is the current version before use.

(See 20.2)

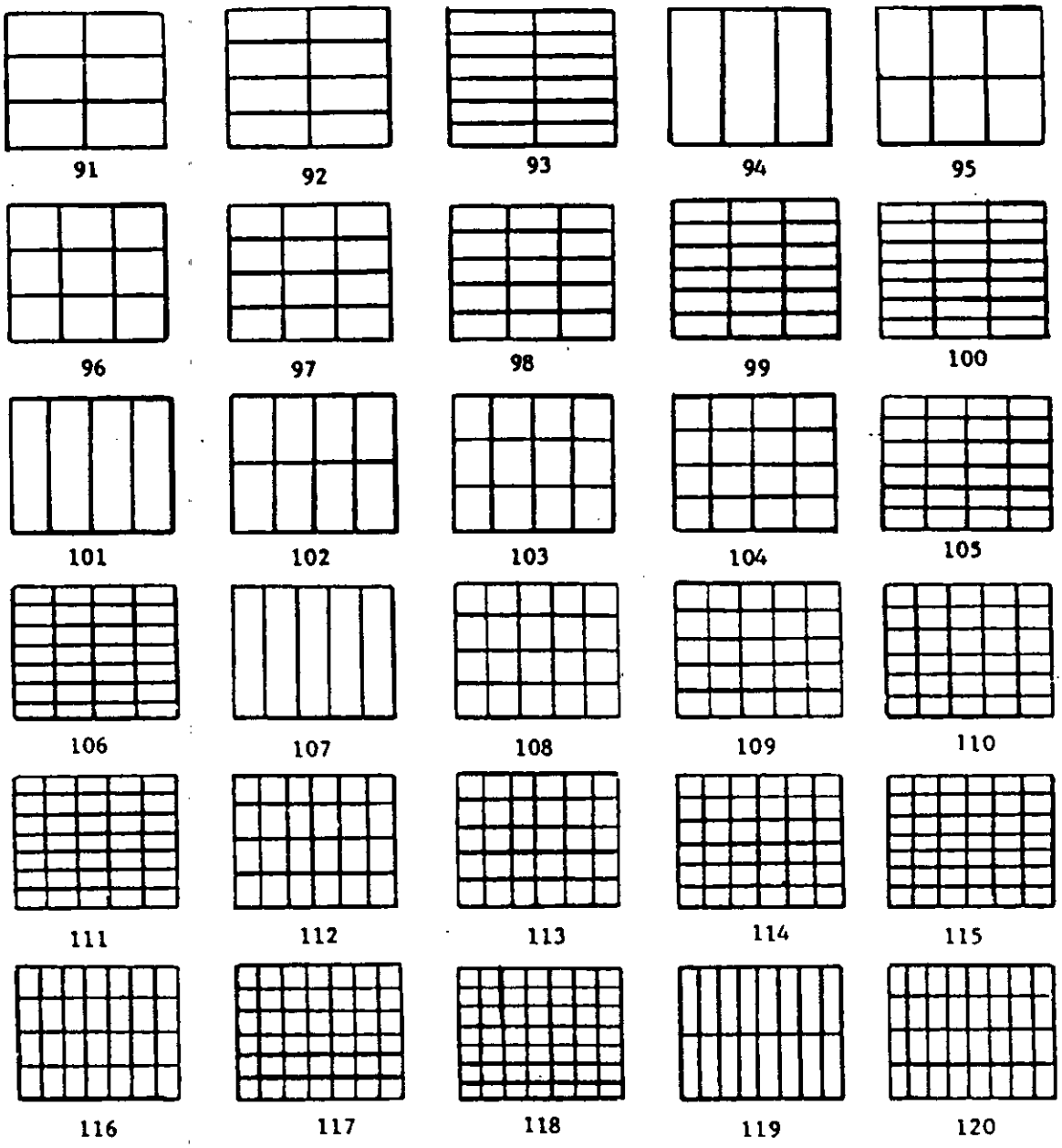

FIGURE 51. Load patterns on 40" by 48" pallets - Continued.

Source: https://assist.dla.mil -- Downloaded: 2017-02-09T05:28Z
Check the source to verify that this is the current version before use.

(See 20.2)

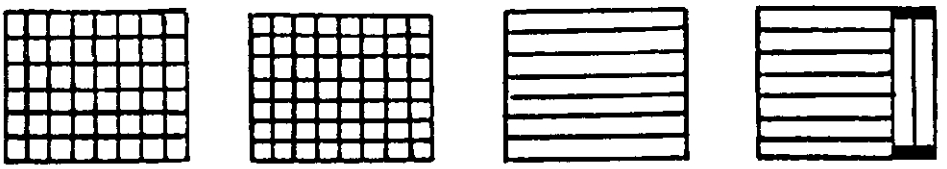

121 122 123 124

FIGURE 51. Load patterns on 40" by 48" pallets - Continued.

Source: https://assist.dla.mil -- Downloaded: 2017-02-09T05:28Z
Check the source to verify that this is the current version before use.

APPENDIX C

STANDARD CONTAINERS FOR MODULAR PACKAGING UNITIZATION

(see 5.1.2.1)

10. SCOPE

10.1 Purpose. In order to achieve maximum utilization of cubic space when shipping materiel in MILVANs and SEAVANs, basic data is provided herein for a series of standard size unit, intermediate, and exterior containers fabricated from fiberboard, plywood, or wood for use in modular packaging unitization applications. The modular containers are designed so that the dimensions of the unit pack fit the intermediate container which in turn fits the exterior container for eventual unitization in MILVANs and SEAVANs. The standard containers listed herein are to be used when appropriate but are not mandatory for use when separate containers designed for specific categories of commodities have been established.

20. STANDARD UNIT AND INTERMEDIATE CONTAINERS

20.1 General specifications and classifications. Standard unit and intermediate container requirements, including weight limitations and classifications, are in accordance with the applicable documents referenced in tables IV and V.

20.2 Dimensions. Inside dimensions expressed in inches for the standard unit and intermediate containers shall be as indicated in tables IV and V. Sizes were designed to fit PPP-B-601 and PPP-B-621 wood boxes which have the smallest inside dimensions. Dimensions for the PPP-B-601 box are based on the use of 1/2-inch plywood with 7/8-inch cleats, while dimensions for the PPP-B-621 box are based on the use of 3/4-inch lumber. The actual thickness of the plywood and wood is determined by the weight of the contents of each box. Detailed information is included in the applicable box specification.

30 STANDARD EXTERIOR CONTAINERS

30.1 General specifications and classifications. Standard exterior container requirements and classifications are in accordance with the applicable specifications referenced above tables VI through X.

30.2 Dimensions. Inside dimensions in inches and inside cubic measurements for standard exterior containers shall be as specified in tables VI through X.

Source: https://assist.dla.mil -- Downloaded: 2017-02-09T05:28Z
Check the source to verify that this is the current version before use.

30.3 Maximum weight limitations. Maximum weight limitations for standard size exterior containers shall be in accordance with the applicable box specification.

40 STANDARD CARTON DETERMINATION, SELECTION, AND APPLICABILITY

40.1 Standard carton determination. Determination of the most effective packaging procedure(s) and standard container(s) to be utilized shall be in accordance with prescribed packaging policies and procedures. Consideration shall be given to such things as load type, level(s) of protection, and size of items to be shipped.

40.2 Unit and intermediate standard container selection. When determined to be needed in the packaging procedure, the appropriate standard unit container or unit and intermediate container shall be selected from tables IV and V according to the corresponding specification listed above each table and the appropriate dimensions determined by the size of the items being packaged. The standard container sizes are numerically designated 1 through 13 and are listed in column 1 of these tables. The standard quantity per modular container (intermediate or exterior) is indicated in column three of each table. Standard intermediate containers which have been modularly presized to hold unit containers 1 through 5 shall be selected from column 4 of table IV, and standard exterior containers which have been modularly presized to hold intermediate containers 6 through 13 shall be selected from column 4 of table V. The five different standard exterior containers listed herein are numbered 14 through 18.

40.3 Exterior standard container selection. Standard exterior containers shall be selected from tables VI through X according to the applicable specification cited above each table and the appropriate dimensions and cubes determined from the items' sizes. The exterior container sizes, designated 14 through 18 in all five tables, are considered to be the "same size" for modular grouping and reference purposes. Actual sizes differ slightly because of the inherent physical characteristics of each type container (i.e., wood, plywood, and fiberboard). To illustrate the use of tables IV through X, consider the selection of box No. 3 of PPP-B-566 as the standard unit container for a modular packaged unitized load. Columns 3 and 4 of table IV show that 75 of the No. 3 containers can be placed in standard intermediate container No. 7, which is box No. 7 of PPP-B-636 shown in table V. Columns 3 and 4 of table V show that 12 of the No. 7 containers can be placed in standard exterior container No. 14, which can be any No. 14 container of the 5 different box specifications listed in tables VI through X.

Source: https://assist.dla.mil -- Downloaded: 2017-02-09T05:28Z
Check the source to verify that this is the current version before use.

50 PALLETIZED UNIT LOADS

50.1 Palletized unit load arrangements. Palletized unit loads of standard exterior containers shall be arranged on 40- by 48-inch pallets without overhangs and voids to provide maximum cube utilization when containerized in MILVANs and SEAVANs.

50.2 Palletized unit load arrangements for standard exterior cartons of the same size. Palletized unit load arrangements for standard exterior containers which are all of the same size when formed on a 40- by 48-inch pallet are shown in table XI. The table describes each arrangement in terms of number of boxes per layer, number of layers per unit load, and total number of boxes per unit load. These arrangements are illustrated in figures 52 through 55 to show unit load arrangements for box Nos. 15 through 18, respectively. Box No. 14, consisting of 1 palletized container which in itself constitutes a unit load, is not shown.

50.3 Palletized unit load arrangements for standard exterior cartons of mixed sizes. Palletized unit load arrangements of standard exterior containers which are comprised of different size cartons within the unit load are illustrated in figures 56 and 57.

50.4 Palletized unit load arrangement applicability. Palletized unit load arrangements shown herein are not intended to be all inclusive or mandatory for use. Other arrangements may be used when dictated by specific packaging requirements.

50.5 Palletized unit load height and weight limitations. The unit load weight limitations shall not exceed 3,000 pounds per single pallet load (see 5.1.1.4), while the height limitations shall not exceed 41 inches for MILVANs and 43 inches for SEAVANs including the pallet base.

50.6 Securing unitized loads to pallets. Unitized loads shall be secured to pallets by the application of shrink-wrap bonding (see 5.3.4.1) or by strapping (see 5.3.3.1 through 5.3.3.3).

Source: https://assist.dla.mil -- Downloaded: 2017-02-09T05:28Z
Check the source to verify that this is the current version before use.

TABLE IV. Standard unit containers
(PPP-B-566 (Box, Folding, Paperboard), variety 1, style II, type D, classes a and e)

Box size No.	Inside dimensions (inches) Length		Width		Depth	No. per intermediate container	Intermediate container No.
1	10 7/8	by	5 7/8	by	7 5/8	12	6
2	7 3/4	by	5 7/8	by	4 1/8	30	6
3	5 7/8	by	4 1/4	by	1 3/4	75	7
4	4 1/4	by	2 7/8	by	1 3/4	120	8
5	2 7/8	by	1 7/8	by	1 3/4	150	11

TABLE V. Standard unit and intermediate containers
(PPP-B-636 (Box, Shipping, Fiberboard), type CF, class domestic and class weather-resistant, variety single-wall, grades 125, 175, 200, 275, V3c, W5c, style RSC)

Box size No.	Inside dimensions (inches) Length		Width		Depth	No. per exterior container	Exterior container No.
6	22 1/8	by	18 1/4	by	15 7/8	8	14
7	22 1/8	by	18 1/4	by	10 1/4	12	14
8	22 1/8	by	18 1/4	by	7 1/2	16	14
9	22 1/8	by	18 1/8	by	6 7/8	8	15
10	18 1/8	by	10 3/8	by	15 7/8	8	16
11	18 1/8	by	10 3/8	by	10 1/4	12	16
12	18 1/8	by	10 3/8	by	6 7/8	8	17
13	10 1/8	by	8 1/4	by	6 7/8	8	18

Source: https://assist.dla.mil -- Downloaded: 2017-02-09T05:28Z
Check the source to verify that this is the current version before use.

TABLE VI. Standard exterior cleated plywood containers (PPP-B-601 (Boxes, Wood, Cleated Plywood), type - overseas, styles A, B, and I)

Box size No.	Inside dimensions (inches) Length		Width		Depth	Inside cube
14	45 1/4	by	37 1/4	by	33 1/4	32.43
15	45 1/4	by	37 1/4	by	15 1/4	14.88
16	37 1/4	by	21 1/4	by	33 1/4	15.23
17	37 1/4	by	21 1/4	by	15 1/4	6.98
18	21 1/4	by	17 1/4	by	15 1/4	3.23

TABLE VII. Standard exterior nailed wood containers (PPP-B-621 (Box, Wood, Nailed And Lock-corner), class 2, overseas, styles 2 through 4 1/2)

Box size No.	Inside dimensions (inches) Length		Width		Depth	Inside cube
14	45	by	38 1/2	by	34 1/2	34.59
15	45	by	38 1/2	by	16 1/2	16.54
16	37	by	22 1/2	by	34 1/2	16.62
17	37	by	22 1/2	by	16 1/2	7.94
18	21	by	18 1/2	by	16 1/2	3.71

Source: https://assist.dla.mil -- Downloaded: 2017-02-09T05:28Z
Check the source to verify that this is the current version before use.

TABLE VIII. Standard exterior wirebound containers (PPP-B-585 (Box, Wood, Wirebound), class 3, military overseas)

Box size No.	Inside dimensions (inches) Length		Width		Depth	Inside cube
14	45 1/2	by	39 1/4	by	35 1/4	36.43
15	45 1/2	by	39 1/4	by	17 1/4	17.83
16	39 1/4	by	23 1/4	by	35 1/4	18.62
17	39 1/4	by	23 1/4	by	17 1/4	9.11
18	23 1/4	by	19 1/4	by	17 1/4	4.47

TABLE IX. Standard exterior triple-wall fiberboard containers (PPP-B-640 (Box, Fiberboard, Corrugated, Triple-wall), class 1, nonweather-resistant, and class 2, weather-resistant, style E, RSC)

Box size No.	Inside dimensions (inches) Length		Width		Depth	Inside cube
14	47	by	39	by	34	36.07
15	47	by	39	by	16	16.97
16	39	by	23	by	34	17.65
17	39	by	23	by	16	8.31
18	23	by	19	by	16	4.05

Source: https://assist.dla.mil -- Downloaded: 2017-02-09T05:28Z
Check the source to verify that this is the current version before use.

TABLE X. Standard exterior double-wall fiberboard containers (PPP-B-636 (Box, Shipping, Fiberboard), type CF, class domestic and class weather-resistant, variety double-wall, style RSC)

Box size No.	Inside dimensions (inches) Length		Width		Depth	Inside cube
14	47 1/2	by	39 1/2	by	35	38.00
15	47 1/2	by	39 1/2	by	17	18.46
16	39 1/2	by	23 1/2	by	35	18.80
17	39 1/2	by	23 1/2	by	17	9.13
18	23 1/2	by	19 1/2	by	17	4.51

TABLE XI. Unit load arrangements of exterior containers on a 40- by 48-inch pallet

Box size No.	No. of boxes per layer	No. of layers per unit load	No. of boxes per unit load
14	1	1	1
15	1	2	2
16	2	1	2
17	2	2	4
18	4	2	8

Source: https://assist.dla.mil -- Downloaded: 2017-02-09T05:28Z
Check the source to verify that this is the current version before use.

(See 50.2)

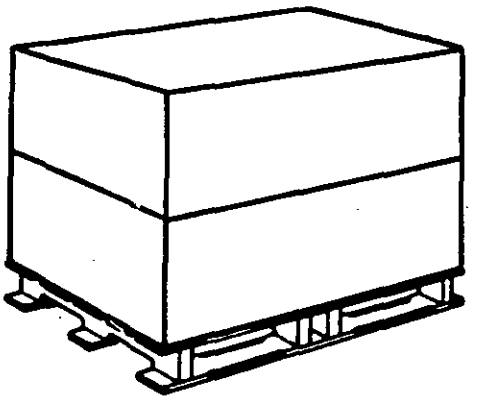

FIGURE 52. Unit load arrangement for standard exterior container No. 15 (same size).

(See 50.2)

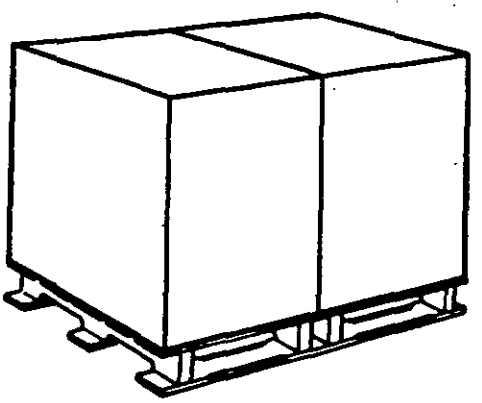

FIGURE 53. Unit load arrangement for standard exterior container No. 16 (same size).

Source: https://assist.dla.mil -- Downloaded: 2017-02-09T05:28Z
Check the source to verify that this is the current version before use.

(See 50.2)

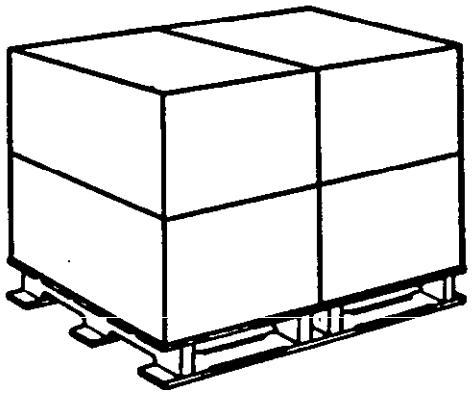

FIGURE 54. Unit load arrangement for standard exterior container No. 17 (same size).

(See 50.2)

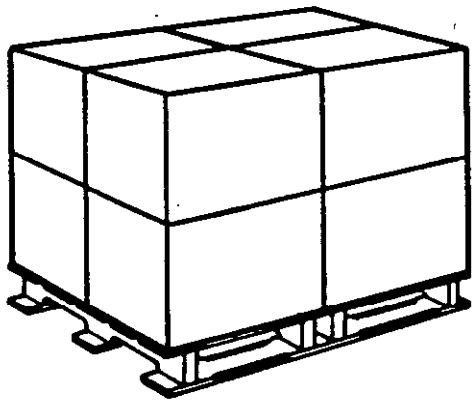

FIGURE 55. Unit load arrangement for standard exterior container No. 18 (same size).

Source: https://assist.dla.mil -- Downloaded: 2017-02-09T05:28Z
Check the source to verify that this is the current version before use.

(See 50.3)

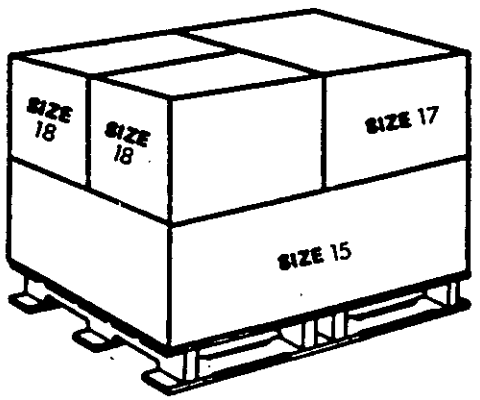

FIGURE 56. Unit load arrangement for standard exterior containers Nos. 15, 17, and 18 (mixed sizes).

(See 50.3)

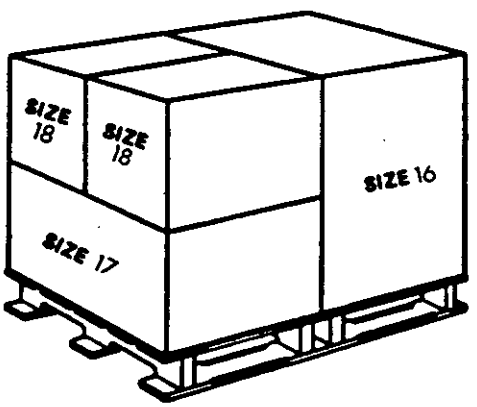

FIGURE 57. Unit load arrangement for standard exterior containers Nos. 16, 17, and 18 (mixed sizes).

Source: https://assist.dla.mil -- Downloaded: 2017-02-09T05:28Z
Check the source to verify that this is the current version before use.

INDEX

SUBJECT	PARAGRAPH(S)	PAGE(S)
Abbreviations	4.1	13
Auxiliary strap	3.33.1, 5.3.3.2	11,25
Bagged units	5.2.15, Appendix A (20.1u)	21,66
Bales or bundles	5.2.2, Appendix A (20.1c)	19,65
Battens	3.1, 5.4.11-5.4.11.3	7,37-38
Bonding methods	3.2.1, 5.3.1-5.3.4.2, Appendix A (20.2)	7,22-27,67
Canvas cap	5.4.3.1, Appendix A (20.3c)	29,68
Canvas cover	5.4.4, Appendix A (20.3h)	31,68
Caps	3.3, 5.4.3-5.4.3.5	7,29-31
Cellular load units	5.2.10, Appendix A (20.1m)	20,66
Chimney filler	5.4.16, Appendix A (20.3dd)	40,69
Compressed gas cylinder	5.2.9, Appendix A (20.1k)	20,66
Corner supports	5.2.5	19
Cross-strap battens	5.4.11.1, Appendix A (20.3v)	37,68
Cross-ties	3.5, 5.3.2.4.3	7,24
Cylindrical cans, pails, buckets, etc.	5.2.3, 5.2.3.1, 5.2.4, 5.2.13, Appendix A (20.1d-20.1g)	19,21,65
Determination of load pattern	Appendix B (20, Table III)	83-86
Double tray cap	5.4.3.5, Appendix A (20.3g)	31,68
Drums, kegs, etc.	5.2.12-5.2.13, Appendix A (20.1p-20.1s)	20,21,66
End frames	5.4.6.3, Appendix A (20.3m)	34,68

Source: https://assist.dla.mil -- Downloaded: 2017-02-09T05:28Z
Check the source to verify that this is the current version before use.

INDEX

SUBJECT	PARAGRAPH(S)	PAGE(S)
English-metric conversion	1.3, Table I, Table II	1-3
Ethylene vinyl acetate	4.2.5, 5.3.4.2	14,27
Fiberboard boxes	5.2.1.1, Appendix A (20.1b)	19,65
Fiberboard cap	5.4.3.2, Appendix A (20.3d)	29,68
Frames	3.10, 5.4.6-5.4.6.3	8,33-34
Frame supports	3.10.1, 5.4.7, Appendix A (20.3n)	8,34,68
Gas cylinder battens	3.1, 5.2.9. 5.4.11.3, Appendix A (20.3y)	7,20,38,68
Glue bonding	3.11, 5.3.1-5.3.1.2	8,22-23
Glued strip	3.11.2, 5.3.1.2, Appendix A (20.2b)	8,23,67
Glue stripe	3.11.3, 5.3.1.1, Appendix A (20.2a)	8,22,67
Horizontal fiberboard separator	3.27.1, 5.4.9.1, Appendix A (20.3q)	10,36,68
Horizontal straps	3.33.2, 5.3.2.3.2, 5.3.3.1, Appendix A (20.2c)	11,23,24, 67
Horizontal wood separator	3.27.1, 5.4.9.2, Appendix A (20.3r)	10,36,68
Intersection seals	3.5, 5.3.2.4.3	7,24
Kegs, drums, etc.	5.2.12-5.2.13, Appendix A (20.1p-20.1s)	20,21,66
List of commodities and containers	Appendix A (30.1)	69-82
Load patterns	3.17.1, 4.2.3, 5.1, Appendix B	9,14,17, 83-91

Source: https://assist.dla.mil -- Downloaded: 2017-02-09T05:28Z
Check the source to verify that this is the current version before use.

INDEX

SUBJECT	PARAGRAPH(S)	PAGE(S)
Load sizes	4.2.2, 5.1.1.1, 5.1.2-5.1.2.3	14,17,18
Load strap, auxiliary	3.33.1, 5.3.3.3, Appendix A (20.2e)	11,26,67
Load types	3.17.2, 4.2.1, 5.2.1-5.2.18, Appendix A (20.1)	9,14,19-22, 65-66
Marking	5.5	40
Metallic edge protector	3.7, 5.3.2.4.2, 5.4.1, Appendix A (20.3a)	7,24,28,67
Metallic strapping	5.3.2, 5.3.2.1	23
MILVAN	3.20, 5.1.1.1, 5.1.2.1, Appendix C (10.1)	9,17,18,92
Modular packaging unitization	5.1.2.1, Appendix C	18,92-101
NATO forces	5.1.2.3	18
Navy afloat units	5.1.2.2	18
Nested units	3.22, 3.42, 5.2.5, Appendix A (20.1g)	9,12,19,65
Nested packer	3.22.1, 5.2.14, 5.4.15, Appendix A (20.1t, 20.3cc)	9,21,40,66, 69
Nonmetallic edge protector	3.7, 5.3.2.4.2, 5.4.2, Appendix A (20.3b)	7,24,28,67
Nonmetallic strapping	5.3.2, 5.3.2.2	23
Notched wood spacer	3.31, 5.4.13, Appendix A (20.3aa)	10,39,68
Overhang	3.23, 5.1	9,17
Oxygen cylinder batten	3.1, 5.2.9, 5.4.11.3, Appendix A (20.3x)	7,20,38,68

Source: https://assist.dla.mil -- Downloaded: 2017-02-09T05:28Z
Check the source to verify that this is the current version before use.

INDEX

SUBJECT	PARAGRAPH(S)	PAGE(S)
Pails, cans, buckets, etc.	5.2.3, 5.2.3.1, 5.2.4, 5.2.13, Appendix A (20.1d-20.1g)	19,21,65
Pallet design	3.24.1-3.24.1.2, 4.2.6	9,10,15
Palletized unit load	3.25, 5.1, 5.1.1, 5.1.2, Appendix C (50)	10,17,18, 94
Pallet strips	3.24.2, 5.4.10, Appendix A (20.3u)	10,37,68
Paper stock and printed matter	5.2.6, Appendix A (20.1h)	20,66
Polyethylene	4.2.5, 5.3.4.1, 5.3.4.2	14,27
Polyethylene sheeting	5.4.17, Appendix A (20.3ee)	40,69
Polyvinyl chloride	4.2.5, 5.3.4.1, 5.3.4.2	14,27
Primary straps	3.33.6, 5.3.3.2	11,25
Rectangular metal and wood boxes	5.2.1, 5.2.8, Appendix A (20.1a)	19,20,65
Reels, coils, spools, rolls, etc.	5.2.11, 5.2.13, Appendix A (20.1n)	20,21,66
SEAVAN	3.26, 5.1.1.1, 5.1.2.1, Appendix C (10.1)	7,17,18, 92
Secondary straps	3.33.7, 5.3.3.2	11,25
Sectional pallet box	5.2.16, 5.4.14, Appendix A (20.1v, 20.3bb)	21,39,66, 68
Securing straps	5.3.2.4, 5.3.2.4.1	24
Separators for nested containers	5.4.9.3, Appendix A (20.3s)	36,68
Separators	3.27, 5.4.9-5.4.9.4	10,36

Source: https://assist.dla.mil -- Downloaded: 2017-02-09T05:28Z
Check the source to verify that this is the current version before use.

INDEX

SUBJECT	PARAGRAPH(S)	PAGE(S)
Separator supports	3.40, 5.4.8, Appendix A (20.3p)	12,35,68
Shrink wrap	3.29, 5.3.4.1, Appendix A (20.2f)	10,27,67
Side frames	5.4.6.1, Appendix A (20.3j)	33,68
Storage aids	3.32, 5.4-5.4.17, Appendix A (20.3)	10,28-40, 67-69
Storage batteries	5.2.7, Appendix A (20.1i)	20,66
Strap bonding methods	5.3.3-5.3.3.3	24-26
Strapping	3.33, 5.3.2-5.3.2.4.3	11,23-24
Stretch wrap	3.36, 5.3.4.2, Appendix A (20.2g)	11,27,67
Tie-down straps	3.33.5, 5.3.2.3.1, 5.3.3.2, Appendix A (20.2d)	11,23,25, 67
Top frames	5.4.6.2, Appendix A (20.3k)	33,68
Tray cap	5.4.3.4, Appendix A (20.3f)	31,68
Underhang	3.43, 5.1	12,17
Under- or over-the-load battens	5.4.11.2, Appendix A (20.3w)	37,68
Unstable, small, and odd-shaped units	5.2.17, Appendix A (20.1w)	22,66
Vertical supports	3.41, 5.4.3.3, 5.4.3.4	12,29,31
Vertical wood separators	3.27.2, 5.4.9.4, Appendix A (20.3t)	10,36,68
Waterproof wrapping	5.2.6, 5.4.5, Appendix A (20.3i)	20,32,68
Weight limits	5.1.1.2	18

Source: https://assist.dla.mil -- Downloaded: 2017-02-09T05:28Z
Check the source to verify that this is the current version before use.

INDEX

SUBJECT	PARAGRAPH(S)	PAGE(S)
Window lights	5.2.7, Appendix A (20.1i)	20,66
Wood cap	5.4.3.3, Appendix A (20.3e)	29,68
Wood collar	3.4, 5.4.12, Appendix A (20.3z)	7,38,68
Wrapping	4.2.5	14

Source: https://assist.dla.mil -- Downloaded: 2017-02-09T05:28Z
Check the source to verify that this is the current version before use.

CONCLUDING MATERIAL

Custodians:
Army - SM
Navy - SA
Air Force - 99
DLA - DH

Preparing activity:

Army - SM

(Project PACK-0888)

Review activities:
Army - AL, AR, AT, AV, EA, GL, ME, MI,
Navy - AS, MC, SH, YD
Air Force - 69, 84
DLA - CS, DM, IS

User activities:
Army - CR
Navy - EC

Review and user information is current as of the date of this document. For future coordination of changes to this document, draft circulation should be based on the information in the current Federal Supply Classification Listing of DOD documents.

Source: https://assist.dla.mil -- Downloaded: 2017-02-09T05:28Z
Check the source to verify that this is the current version before use.

INSTRUCTIONS: In a continuing effort to make our standardization documents better, the DoD provides this form for use in submitting comments and suggestions for improvements. All users of military standardization documents are invited to provide suggestions. This form may be detached, folded along the lines indicated, taped along the loose edge *(DO NOT STAPLE)*, and mailed. In block 5, be as specific as possible about particular problem areas such as wording which required interpretation, was too rigid, restrictive, loose, ambiguous, or was incompatible, and give proposed wording changes which would alleviate the problems. Enter in block 6 any remarks not related to a specific paragraph of the document. If block 7 is filled out, an acknowledgement will be mailed to you within 30 days to let you know that your comments were received and are being considered.

NOTE: This form may not be used to request copies of documents, nor to request waivers, deviations, or clarification of specification requirements on current contracts. Comments submitted on this form do not constitute or imply authorization to waive any portion of the referenced document*(s)* or to amend contractual requirements.

(Fold along this line)

(Fold along this line)

DEPARTMENT OF THE ARMY

NO POSTAGE NECESSARY IF MAILED IN THE UNITED STATES

OFFICIAL BUSINESS
PENALTY FOR PRIVATE USE $300

BUSINESS REPLY MAIL
FIRST CLASS PERMIT NO. 12062 WASHINGTON D. C.
POSTAGE WILL BE PAID BY THE DEPARTMENT OF THE ARMY

Source: https://assist.dla.mil -- Downloaded: 2017-02-09T05:28Z
Check the source to verify that this is the current version before use.

STANDARDIZATION DOCUMENT IMPROVEMENT PROPOSAL

(See Instructions – Reverse Side)

1. DOCUMENT NUMBER	2. DOCUMENT TITLE

3a. NAME OF SUBMITTING ORGANIZATION	4. TYPE OF ORGANIZATION *(Mark one)*
b. ADDRESS *(Street, City, State, ZIP Code)*	☐ VENDOR ☐ USER ☐ MANUFACTURER ☐ OTHER *(Specify)*: _____

5. PROBLEM AREAS

a. Paragraph Number and Wording:

b. Recommended Wording:

c. Reason/Rationale for Recommendation:

6. REMARKS

7a. NAME OF SUBMITTER *(Last, First, MI)* – Optional	b. WORK TELEPHONE NUMBER *(Include Area Code)* – Optional
c. MAILING ADDRESS *(Street, City, State, ZIP Code)* – Optional	8. DATE OF SUBMISSION *(YYMMDD)*

(TO DETACH THIS FORM, CUT ALONG THIS LINE.)

DD FORM 82 MAR 1426 PREVIOUS EDITION IS OBSOLETE

Source: https://assist.dla.mil -- Downloaded: 2017-02-09T05:28Z
Check the source to verify that this is the current version before use.