MIL-D-6054F
14 May 1987
SUPERSEDING
MIL-D-6054E
29 March 1974

MILITARY SPECIFICATION

DRUM, METAL-SHIPPING AND STORAGE

This specification is approved for use by all Departments and Agencies of the Department of Defense.

1. SCOPE

1.1 Scope. This specification covers new cylindrical drums to be used as exterior shipping containers (see 6.1).

1.2 Classification. Drums shall be furnished in the dimensions and capacities as specified in the applicable MS standards.

2. APPLICABLE DOCUMENTS.

2.1 Government documents.

2.1.1 Specifications and standards. The following specifications and standards form a part of this specification to the extent specified herein. Unless otherwise specified, the issues of these documents shall be those listed in the issue of the Department of Defense Index of Specifications and Standards (DODISS) and supplement thereto, cited in the solicitation.

Beneficial comments (recommendations, additions, deletions) and any pertinent data which may be of use in improving this document should be addressed to: Air Force Packaging Evaluation Agency (HQ AFLC/DSTZ), Wright-Patterson AFB OH 45433, by using the self-addressed Standardization Document Improvement Proposal (DD Form 1426) appearing at the end of this document or by letter.

AMSC N/A FSC 8110

DISTRIBUTION STATEMENT A. Approved for public release; distribution is unlimited.

Source: https://assist.dla.mil -- Downloaded: 2016-12-11T06:40Z
Check the source to verify that this is the current version before use.

SPECIFICATIONS

Federal

QQ-S-781	Strapping, Steel, and Seals
PPP-C-1120	Cushioning Material, Uncompressed Bound Fiber for Packaging

Military

MIL-R-3065	Rubber, Fabricated Product
MIL-R-6855	Rubber, Synthetic Sheets, Strips, Molded or Extruded Shapes
MIL-I-26860	Indicator, Humidity, Plug, Color Change

STANDARDS

Federal

FED-STD-No. 595	Colors

Military

MIL-STD-105	Sampling Procedures and Tables for Inspection by Attributes
MIL-STD-129	Marking for Shipment and Storage
MIL-STD-147	Palletized Unit Loads
MIL-STD-831	Test Reports, Preparation of
MS 27683	Drums, Metal-Shipping and Storage (16 to 80 gallons)
MS 27684	Drums, Metal-Shipping and Storage (3 to 12 gallons)

(Copies of specifications, standards, drawings, and publications required by manufacturers in connection with specific acquisition functions should be obtained from the contracting activity or as directed by the contracting officer.)

2.2 Other publications. The following document(s) form a part of this specification to the extent specified herein. Unless otherwise specified, the issues of the documents which are DOD adopted shall be those listed in the issue of the DODISS specified in the solicitation. Unless otherwise specified, the issues of the documents not listed in the DODISS shall be the issue of the nongovernment documents which is current on the date of the solicitation.

Source: https://assist.dla.mil -- Downloaded: 2016-12-11T06:40Z
Check the source to verify that this is the current version before use.

American Society for Testing and Materials (ASTM)

A-109	Steel, Strip, Carbon, Cold-Rolled (DOD adopted)
A-366	Steel, Sheet, Carbon, Cold-Rolled, Commercial Quality (DOD adopted)
B-117	Salt Spray (FOG) Testing, Standard Method of (DOD adopted)
D-610	Evaluating Degree of Rusting on Painted Steel Surfaces (DOD adopted)
D-3951	Standard Practice for Commercial Packaging

(Application for copies should be addressed to the American Society for Testing and Materials, 1916 Race Street, Philadelphia, PA 19103.)

(Nongovernment standards and other publications are normally available from the organizations which prepare or which distribute the documents. These documents also may be available in or through libraries or other informational services.)

2.3 Order of precedence. In the event of a conflict between the text of this specification and the references cited herein (except for associated detail specifications, specification sheets or MS standards), the text of this specification shall take precedence. Nothing in this specification, however, shall supersede applicable laws and regulations unless a specific exemption has been obtained.

3. REQUIREMENTS

3.1 MS sheets. The individual item requirements shall be as specified herein and in accordance with the applicable MS sheet. In the event of any conflict between the requirements of this specification and the MS sheet, the latter shall govern.

3.2 First article. Unless otherwise specified, the supplier shall furnish two samples for first article inspection and approval (see 4.4 and 6.3).

3.3 Materials. Materials used in the manufacture of drums shall meet all requirements specified herein.

3.3.1 Steel. Cold rolled steel sheets for bodies, covers and bottoms shall conform to ASTM A366. Cold rolled steel strips for lugs and locking rings shall be quarter-hard temper, edge condition No. 4, free from burrs and sharp edges, conforming to ASTM A 109. The gage of steel (per United States standard gage) specified in the applicable MS standards for the drum body, covers, bottoms and closure is the minimum thickness acceptable. When thicker material than specified is used in the fabrication of drums, the increased thickness of material shall not be of

Source: https://assist.dla.mil -- Downloaded: 2016-12-11T06:40Z
Check the source to verify that this is the current version before use.

such magnitude as to interfere with the interchangeability of drum parts (see 4.5.1).

3.3.2 Gaskets. Gaskets shall be formed from synthetic rubber conforming to MIL-R-6855, Class 2, Grade 60, or MIL-R-3065, Grade SC-610F (see 4.5.4.1).

3.4 Design and construction. The design of the drum body and component parts shall be in accordance with applicable MS standards (see 4.5.4).

3.4.1 Cover. The container cover shall be style #1 (recessed). The 10.5, 13.81, 15.38, and 18.25 inch diameters drums may also be procured with style #2 domed covers (see 6.2). Convexity of covers shall not extend beyond level of chime (see 4.5.4.1).

3.4.2 Locking ring. The locking ring shall be either Style 1 or Style 2 as specified (see 4.5.4.1 and 6.2).

3.4.2.1 Style 1 locking ring. The locking ring shall be of the nut and bolt type. The bolt shall be a commercial standard 3/8-16 UNC-2A hex head with screw driver slot in hex head. The nut shall be a standard SAE hex nut or a commercial jam nut. Bolt heads and nuts shall be of a size that is compatible with standard hand and power tools. Nut and bolt shall be zinc or cadmium plated with tensile strength that meets the test requirements of this specification. The lugs shall not bend to attain a permanent set or crack when the required torque is applied. Provisions shall be provided for use of a lead and wire tamper-proof seal (see 4.5.4.1).

3.4.2.2 Style 2 locking ring. The locking ring shall be a lever actuated type locking ring. The construction shall be sturdy enough to develop sufficient tension to completely seal the closure and withstand all tests required by this specification. Provisions shall be provided for use of a lead and wire tamper-proof seal (see 4.5.4.1).

3.4.3 Humidity indicator. When specified (see 6.2), the drum body shall have provisions for accepting a humidity indicator conforming to MIL-I-26860, Type I, or Type II. The provision shall allow for a hermetic seal between the container body and the indicator. The humidity indicator shall be located in the body at a point opposite the side seam and an equal distance between the hoops of the drum. Other locations may be specified by the procuring agency (see 4.5.4.1, 4.6.1, and 6.2).

3.4.4 Handles. When specified (see 6.2), drums having an inside diameter of 22.5 inches or greater shall be equipped with two chest type drop handles located in the upper one third of the drum and equally spaced around the circumference. Each handle

Source: https://assist.dla.mil -- Downloaded: 2016-12-11T06:40Z
Check the source to verify that this is the current version before use.

assembly shall be designed for the surface mounting with stops to hold the bail perpendicular to the mounting plate when in carrying position. The bail shall have a minimum inside length of four inches and a minimum clearance of two inches from the bail perpendicular to the mounting plate. When tested in accordance with paragraph 4.5.5, the handle assembly shall be capable of supporting loaded drums without permanent distortion at extremities in excess of 1/4 inches from the horizontal (see 4.6.4).

3.4.5 Dimensions Dimensions shall be in accordance with the applicable MS standards (see 4.5.4.2).

3.5 Finish.

3.5.1 Conversion coatings. The interior and exterior surface of all drums, including the cover and locking rings, shall be clean and compatible with the conversion coating utilized (when required) for production of the end item (see 4.4.1).

3.5.2 Protective coating. Unless otherwise specified, (see 6.2), coat all interior and exterior surfaces of the drum and component parts, except the closing bolt and gasket, with a rust inhibiting coating that withstands salt spray test requirements (see 3.4.2.1 and 4.3.1). Unless otherwise specified color shall conform to No. 24087 of FED-STD-595 (see 4.4.1 and 6.2).

3.5.2.1 Salt spray resistance. Results of the Salt Spray Test shall show no rust creepage, blistering, undercutting or loss of adhesion of the paint beyond 1/8 inch of the scribe mark. All other surfaces of the test specimens shall show no more than a trace of film failure, (Rust Grade 9 of ASTM D610), with none larger than 1mm, (3/64 inch), in diameter (see 4.4.1).

3.6 Performance The drums shall not leak when tested in accordance with 4.6.1, 4.6.2, and 4.6.3.

3.7 Container marking.

3.7.1 Bottom and top. The bottom and top of the drum shall be embossed in accordance with Figure 1 (see 4.5.4.1).

3.7.2 Body. Unless otherwise specified (see 6.2), the body of each container shall be marked on opposite sides with waterproof ink and letters at least one-half inch high. The marking shall appear three quarters of an inch below the lower edge of the locking ring. The color shall conform to color number 23538 of FED-STD-595. The wording of the marking shall be as follows (see 4.5.4.1):

REUSABLE CONTAINER DO NOT DESTROY

Source: https://assist.dla.mil -- Downloaded: 2016-12-11T06:40Z
Check the source to verify that this is the current version before use.

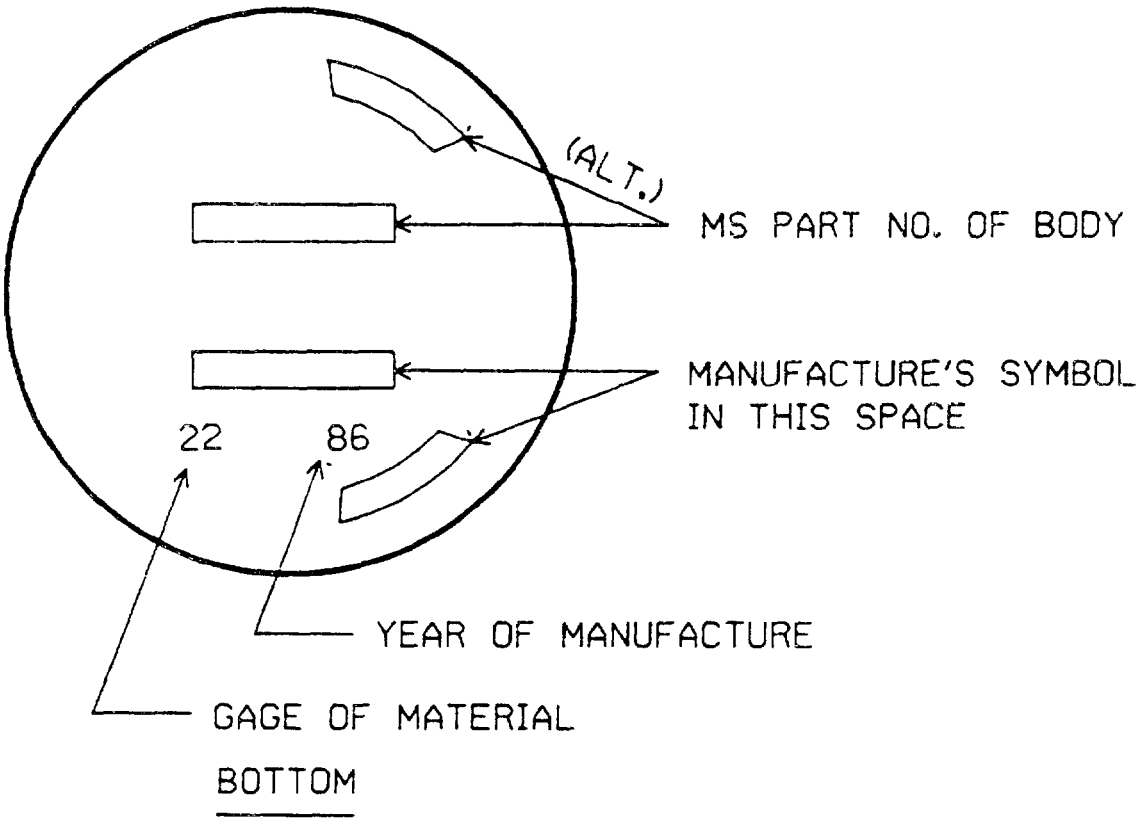

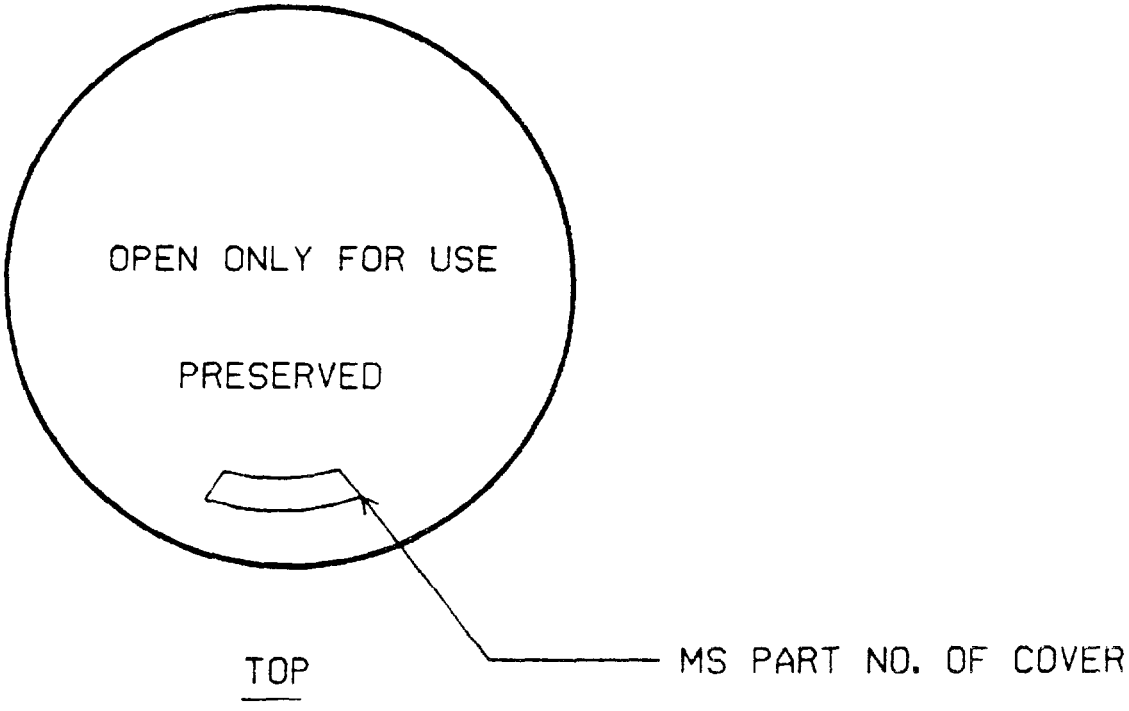

FIGURE 1. DRUM MARKINGS

Source: https://assist.dla.mil -- Downloaded: 2016-12-11T06:40Z
Check the source to verify that this is the current version before use.

3.8 Workmanship. The construction shall be of such quality that finished drums shall have no sharp burrs or rough surfaces. The metal shall be free of defects which may affect the durability, strength, or serviceability of the drum. The gasket shall be uniformly distributed about the circumference of the cover and shall lie naturally with the flat surface parallel to the horizontal plane of the cover to provide a seal which will not leak. The protective coatings shall be applied in a uniform manner (see 4.5.4.1).

4. QUALITY ASSURANCE PROVISIONS

4.1 Responsibility for inspection. Unless otherwise specified in the contract or purchase order, the contractor is responsible for the performance of all inspection requirements as specified herein. Except as otherwise specified in the contract or purchase order, the contractor may use his own or any other facilities suitable for the performance of the inspection requirements specified herein, unless disapproved by the Government. The Government reserves the right to perform any of the inspections set forth in the specification where such inspections are deemed necessary to assure supplies and services conform to prescribed requirements.

4.1.1 Responsibility for compliance. All items must meet all requirements of sections 3 and 5. The inspection set forth in this specification shall become a part of the contractor's overall inspection system or quality program. The absence of any inspection requirements in the specification shall not relieve the contractor of the responsibility of assuring that all products or supplies submitted to the Government for acceptance comply with all requirements of the contract. Sampling in quality conformance does not authorize submission of known defective material, either indicated or actual, nor does it commit the Government to acceptance of defective material.

4.2 Classification of Inspections. The inspection requirements specified herein are classified as follows:

a. First article inspection (see 4.4).
b. Quality conformance inspection (see 4.5).

4.3 Inspection conditions. Unless otherwise specified, all inspections shall be performed in accordance with the test conditions specified in the applicable test method document or the applicable paragraph(s) in this specification.

4.4 First article examination and tests. Unless otherwise specified, two sample drums of each size specified in the procurement document shall be made available for first article examination and tests. They shall be examined for all provisions

Source: https://assist.dla.mil -- Downloaded: 2016-12-11T06:40Z
Check the source to verify that this is the current version before use.

of this specification applicable to the end item inspection (see 4.5.4) and they shall be tested as follows:

a. The two sample drums shall be examined for the defects listed in 4.5.

b. One sample shall be tested as specified in 4.6.1, and one sample shall be tested as specified in 4.6.2, 4.6.3, and 4.6.4. When specified, (see 6.2) the two sample containers shall be forwarded to the procuring activity (see 3.2).

4.4.1 Salt spray test. Three specimens measuring 4 X 6 inches shall be finished front and back using the identical finishing process used in finishing the end item drums. These samples shall be air dried a minimum of 96 hours then scored front and back using a sharp instrument which will bevel the finish coat 30 degrees each side of the score line, through to bare metal. The scoreline shall be continuous for a total of four inches. These specimens shall be subjected to salt spray tests in accordance with ASTM B117 utilizing a five percent salt solution at 120 degrees F for a minimum exposure time of 192 hours. Results of the test shall be evaluated for conformity with the requirements of paragraph 3.5.

4.5 Quality conformance inspection. Quality conformance inspections shall be as specified in Table I.

4.5.1 Inspection of components and materials. Components and materials shall be inspected and tested in accordance with all the requirements of referenced specifications, drawings, and standards unless otherwise excluded, amended, modified, or qualified in this specification or applicable purchase document (see 3.3-3.5.2).

4.5.2 Sampling for inspection and acceptance. Sampling for inspection and acceptance shall be performed in accordance with the provisions set forth in MIL-STD-105, except where otherwise indicated (see 3.2).

4.5.3 Inspection lot. An inspection lot consists of all the drums of the same dimensions and capacities as specified in the appropriate MS standard and per MIL-STD-105 definition (see 3.1).

4.5.4 End item inspection.

4.5.4.1 Visual examination. Examination of the end item shall be in accordance with the classification of defects in Table II and acceptable quality levels (AQL's) in Table I. The lot sizes shall be expressed in units of drums for the purpose of determining the sample size in accordance with MIL-STD-105 (see

Source: https://assist.dla.mil -- Downloaded: 2016-12-11T06:40Z
Check the source to verify that this is the current version before use.

3.3-3.4.5). The sample unit for this examination shall be one complete drum.

TABLE I. Inspection Requirements

Inspection	Requirement Paragraph	Test Method Paragraph	Sampling Procedure		
Group A Inspection					
Visual Examination	3.4	4.5.4.1	II		
Dimension Examination	3.4.5	4.5.4.2	S-2		
Group B Inspection					
Components and Materials	3.3, 3.4	4.5.1	II		
Strength and Air Leak Test	3.6	4.6.1	II		
Group C Inspection					
Rough Handling	3.6	4.6.2	II		
Cover Fit	3.4.1	4.6.3	II		
Handle Test	3.4.4	4.6.4	II		
			AQL (percent defective)		
			Dimension Major	Examination	Total
			2.5	6.5	10

Source: https://assist.dla.mil -- Downloaded: 2016-12-11T06:40Z
Check the source to verify that this is the current version before use.

TABLE II. Classification of visual defects

Examine	Defect	Classification
Finish	Not paint specified.	Major
	Color not as specified.	Minor
	Area of thin film or no film.	Major
	Enamel tacky, peeled or blistered.	Minor
	Dirt, rust, grit or foreign matter embedded in enamel.	Minor
Material	Sharp edges and metal splinters.	Major
	Steel creased or lapped (Mill defect).	Major
Construction and Workmanship	Component fractured, split, bowed, or malformed affecting serviceability.	Major
	Component bowed, dented or malformed not affecting serviceability.	Minor
	Sealing surface not smooth.	Major
	Sharp burr, sliver or splinter that may cause injury.	Major
	Foreign matter, oil, or water in interior of drum.	Minor
Welding	Missing, incomplete, burn holes, cracked, fractured, not fused, or no welding required.	Major
	Sealing surface on top of chime (where body seam weld is curled to form sealing surface) not smooth.	Major
	Not continuous or improper repair.	Major
Locking Ring	Incomplete.	Major
	Wrong size.	Major

Source: https://assist.dla.mil -- Downloaded: 2016-12-11T06:40Z
Check the source to verify that this is the current version before use.

Examine	Defect	Classification
	Bolts or nuts missing, broken or stripped.	Major
	Ring dented or lugs bent.	Major
	Lever lock malformed.	Minor
	Safety lock missing.	Minor
	Provision for wire and lead tamperproof seal missing.	Minor
	Wrong style.	Major
Gaskets	Missing or damaged.	Major
	Not type specified.	Minor
Covers	Do not fit properly.	Major
	Gasket not uniformly distributed in cover.	Minor
	Wrong style.	Major
Assembly	Any component which does not fit or assemble as specified.	Major
Marking	Missing, incomplete, not legible, or not specified type or size.	Minor
Humidity Indicator	Missing (if specified)	Minor

4.5.4.2 Dimension examination. Examination shall be made of the end item to determine compliance with dimensional requirements. Any dimension not within specified tolerance shall be classified as a defect (see 3.4.5).

4.5.4.3 Testing of the end item. Two drums of the same size shall be selected at random from each lot and tested as specified in 4.6.1, 4.6.2, and 4.6.3. Failure of any drum to pass these tests shall be cause for rejection of the lot (see 3.6).

4.5.5 Examination of packaging. The packing and marking shall be examined for conformance to the requirements of section 5.

4.6 Performance tests.

4.6.1 Strength and air leak test. This test shall be performed by the use of the semi-hydrostatic pressure technique as prescribed in procedure A (4.6.1.2) or procedure B (4.6.1.3).

Source: https://assist.dla.mil -- Downloaded: 2016-12-11T06:40Z
Check the source to verify that this is the current version before use.

The semi-hydrostatic pressure test of procedure A is mandatory for all drums with less than 15.5 inch diameters. When it is not feasible for larger diameter drums to be submerged in a water tank, procedure B shall be used (see 3.6).

4.6.1.1 Test specimen preparation. The test specimen shall have a suitable air connection installed in the removable cover. The drum body shall be filled with water to 98% of its capacity. The removable cover with air connection shall have a supply air hose attached to the air connection. The cover shall then be sealed on the drum in accordance with the procedure outlined in 30.1 or 30.2 of Appendix A (see 3.6).

4.6.1.2 Procedure A. The assembled test specimen shall be submerged 1 to 2 inches under water and air pressure slowly applied until the required pressure (see 4.6.1.4) as measured by a suitable pressure gage, is reached. After the test specimen is pressurized to the specified pressure, close the line to the compressed air supply leaving the gage connected so that any drop in pressure may be noted. The drum shall be turned in the water so that the top, bottom, and body seams can be observed for air leakage. Any loss in pressure or detection of bubbles which indicate leakage is cause for rejection (see 3.6).

4.6.1.3 Procedure B. Prepare the test specimen as prescribed in 4.6.1.1. The assembled test specimen shall be pressurized to the specified pressure required for the diameter drum (see 4.6.1.4). Close the compressed air supply line but leave the pressure gage connected to the specimen. Record the initial pressure and maintain for five minutes. Coat all seams, joints, and other similar areas with a bubble-supporting film. Turn specimen so that all surfaces may be observed for leakage. Record the final gage pressure. If there is a loss in pressure and no leaks were detected by bubbles, repeat the bubble supporting film operation to find any leaks not detected initially. Any evidence of leakage is cause for rejection (see 3.6).

4.6.1.4 Pressure requirements. The applicable pressures required to conduct the tests shall be as follows (see 3.6).

Pounds per square inch	Drum diameters (inches)
15.0	10.50
15.0	11.25
15.0	13.81
15.0	14.00
15.0	15.38
15.0	16.00
10.0	18.25
7.0	22.50
6.0	24.00

Source: https://assist.dla.mil -- Downloaded: 2016-12-11T06:40Z
Check the source to verify that this is the current version before use.

Pounds per square inch	Drum diameters (inches)
5.0	26.00
4.5	28.00
4.0	30.00

4.6.2 Rough handling test. See 3.6.

4.6.2.1 Test load. A test load shall be constructed of an assembly of wooden or metal components having an overall diameter and overall length two inches less than the diameter and length respectively of the test drum. The test load shall be rigidly assembled by bolting or other suitable means and in such a way that the weight is evenly distributed (see 3.6).

4.6.2.2 Specimen preparation. The test drum shall have an air connection installed. The test load shall be inserted into the drum and braced and cushioned in such a manner as to prevent damage to the drum by shifting of the test load. Cushioning material conforming to PPP-C-1120, Type IV, shall be used to support the test load on all faces. Unless otherwise specified (see 6.2) the gross weight of the test load including the weight of the bracing, cushioning, and drum assembly shall be equal to the minimum gross weight of loaded drums specified in Table III. The drum shall then be closed in accordance with the procedure outlined in 30.1 or 30.2 of Appendix A. Each drum shall be vertically quartered by marking with a chalk or crayon (see 3.6).

4.6.2.3 Procedure. Perform a free-fall drop alternately on each end as specified in Table III. Drop drum so it impacts on the circumference of the top and bottom at crayon/chalk quartering lines. Make sure the center of gravity of the drum is directly above the point of impact. Allow drum to come to rest on its own volition after each drop. After the final drop pressurize drum to 4 PSI and test for leaks per 4.6.1 (see 3.6).

TABLE III. Test requirements

Drum Assy Part No.	Minimum GR Wt Loaded Drums (Lbs)	Height of Drop (In)	No. of Drops Each End
MS 27684-1, 1A	40	30	4
MS 27684-2, 2A	40	30	4
MS 27684-3, 3A	60	24	4
MS 27684-5, 5A	60	24	4
MS 27684-6, 6A	60	24	4
MS 27684-7, 7A	80	24	4
MS 27684-8, 8A	80	24	4
MS 27683-1, 1A	100	22	4
MS 27683-2, 2A	100	22	4
MS 27683-3	100	21	4

Source: https://assist.dla.mil -- Downloaded: 2016-12-11T06:40Z
Check the source to verify that this is the current version before use.

Drum Assy Part No.	Minimum GR Wt Loaded Drums (Lbs)	Height of Drop (In)	No. of Drops Each End
MS 27683-4	100	21	4
MS 27683-5	150	18	2
MS 27683-6	150	18	2
MS 27683-7	150	18	2
MS 27683-8	150	18	2
MS 27683-9	150	18	2
MS 27683-10	200	16	2
MS 27683-11	200	16	2
MS 27683-12	200	16	2
MS 27683-13	200	16	2
MS 27683-14	250	16	2
MS 27683-15	250	16	2
MS 27683-16	250	16	2
MS 27683-17	250	16	2
MS 27683-18	250	16	2
MS 27683-19	250	16	2
MS 27683-20	250	16	2
MS 27683-21	250	16	2
MS 27683-22	250	16	2
MS 27683-23	250	16	2

4.6.3 Cover fit. After the final drop test and leak test of 4.6.2, the drum shall be opened and then reclosed and again checked for leaks in accordance with 4.6.1 using 4 PSI pressure (see 3.6).

4.6.4 Handle test. The drum, loaded to the minimum weight specified in Table III, shall be lifted by its handle and suspended for a minimum of five minutes (see 3.4.4).

5. Packaging.

5.1 Packing. Assemble drums with all components in place and with the locking rings snugly applied. Pack drums to Levels B or Industrial as specified (see 6.2).

5.1.1 Level B. Place drums of twenty gallons or less on pallets in accordance with load type III of MIL-STD-147 except omit horizontal bands. Secure drums to pallet with strapping conforming to QQ-S-781. Drums in excess of twenty gallons require no additional packing (see 4.5.5).

5.1.2 Industrial. All drums packed to this level must conform to ASTM D3951 requirements (see 4.5.5).

5.2 Marking. See 4.7.

Source: https://assist.dla.mil -- Downloaded: 2016-12-11T06:40Z
Check the source to verify that this is the current version before use.

5.2.1 Level B In addition to any special markings (see 6.2), mark all shipments in accordance to MIL-STD-129 requirements (see 4.5.5).

5.2.2 Industrial. In addition to any special markings (see 6.2), mark all shipments in accordance to ASTM D3951 requirements (see 4.5.5).

6. NOTES

6.1 Intended use. The metal drums of this specification are intended to be used for storage and shipment of military materials. Drums with diameters of 10.50, 11.25, 13.81, 14.00, 15.38 and 16 inches are required to withstand internal pressure of 15.0 pounds per square inch (PSI). Drums of these diameters are intended to be used as overpacks for liquid or semi-liquid hazardous materials which are packaged in containers which do not meet the 15 PSI internal pressure requirements for transportation by military aircraft. All other size drums are suitable for all other methods of preservation where a rigid container is specified.

6.2 Ordering data. Procurement document should specify the following:

a. Title, number, and date of this specification.
b. Quantity
c. MS designation (see Table III).
d. Type and location of humidity indicator when required (see 3.4.3).
e. Cover style (see 3.4.1).
f. Handles when required (see 3.4.4).
g. Style of locking ring (see 3.4.2.1 and 3.4.2.2).
h. Color required other than olive drab (see 3.5.2).
i. Design gross weight (see Table III).
j. When first article inspection, sample and tests are required (see 4.4 and 6.3).
k. Special marking when required (see 3.7).
l. Special coatings when required (see 3.5.2).

6.3 First article When a first article is required, it should be inspected and approved under appropriate provisions of FAR 52:209. The first article should be a preproduction sample of the specified type drum and should consist of two complete drums. The contracting officer should include specific instructions in all procurement instruments regarding arrangements for inspection and approval of the first article. First article is not normally required for orders under 1000. Invitations for bids should provide that the Government reserves the right to waive the requirement for samples for first article inspection to those bidders offering a product which has been previously

Source: https://assist.dla.mil -- Downloaded: 2016-12-11T06:40Z
Check the source to verify that this is the current version before use.

acquired or tested by the Government, and that bidders offering such products, who wish to to reply on such production or test, must furnish evidence with the bid that prior Government approval is presently appropriate for the pending contract.

6.4 Recycled, virgin, and reclaimed material. There is no exclusion to the use of recovered material and there is no requirement that an item be manufactured from virgin material provided that the end item meets the requirements and quality assurance provisions of this specification.

6.5 Disposability. One or more of the following methods shall be used to accomplish disposal of drums or components: reuse, recycling, baling, sanitary landfill, composting, incineration, pyrolysis, or sea disposal.

6.6 Changes from previous issue. Asterisks (or vertical lines) are not used in this revision to identify changes with respect to the previous issue due to the extensiveness of the changes.

6.7 Subject Term (Key Word) Listing

Drums, Metal
Shipping and Storage
Packaging

Source: https://assist.dla.mil -- Downloaded: 2016-12-11T06:40Z
Check the source to verify that this is the current version before use.

APPENDIX

CLOSURE OF DRUMS AND CROSS REFERENCE OF MS NUMBERS TO NSNs

10. SCOPE

10.1 Scope. This Appendix is not a mandatory part of the specification. The information contained herein is intended for guidance to field personnel in the proper closure of filled containers and contains information to assist in ordering drum assemblies and parts.

20. APPLICABLE DOCUMENTS.

This section is not applicable to this appendix.

30. CLOSURE OF CONTAINERS

30.1 Style 1 ring and bolt closure drums: Where use is made of a device which encircles the locking ring and applies pressure uniformly about the circumference of the ring, the closure shall be affected by tightening of the bolt and nut after uniform pressure is applied at all points about the ring. Alternatively closure shall be made by tightening of the closure bolt. The locking ring shall be tapped at various points about the closure ring while the closure bolt is being tightened. The tightening shall continue until at least a torque of 6 plus or minus 1/2 foot-pounds is applied. Unless otherwise specified the closure shall be sealed with a wire and crimped metal seal. The sealing shall utilize the openings provided in the lugs to effect a tamper-proof seal.

30.1.1 Parcel post shipments. Drums used for shipping commodities by parcel post will have the bolt end and protruding edges of the closure ring wrapped, taped, cushioned or otherwise securely covered to prevent damage. Containers shall be overpacked in fiberboard boxes when this extra precaution is considered necessary. When overpacked, containers shall be secured within the fiberboard box with fiberboard or other suitable dunnage, but shall not be required if box fits snugly.

30.2 Style 2, lever-actuated locking ring closures: Where use is made of a device which encircles the locking ring and applies pressure uniformly about the circumference of the ring, the closure shall be effected by closing the locking lever and then the wire and lead seal lever which locks the locking lever in position. Where the encircling device is not available for use, tension is applied by the locking lever and the ring is tapped repeatedly around the circumference until the ring is seated and the lever is in a locking position. The lever is then locked into place by moving the safety lock to its locked position. When specified, the safety lock shall be secured with a wire and

Source: https://assist.dla.mil -- Downloaded: 2016-12-11T06:40Z
Check the source to verify that this is the current version before use.

crimped lead seal. The sealing shall utilize the openings in the locking lever and safety lock to effect a tamper-proof seal.

40. CROSS-REFERENCE TABLES.

40.1 TABLE A-1. This table is provided as a quick reference guide in ordering drum assemblies which consists of the drum body, drum cover, locking ring and gasket.

40.2 TABLE A-2. This table is provided as a quick reference guide to drum component parts that may become damaged and need replacement.

40.3 VALIDITY OF INFORMATION. The information presented in Tables A-1 and A-2 was valid when MIL-D-6054F was prepared. Ordering activities should verify the currency of data before submitting requisitions through supply channels.

Source: https://assist.dla.mil -- Downloaded: 2016-12-11T06:40Z
Check the source to verify that this is the current version before use.

TABLE A-1

MS Number and National Stock Number for Drum Assemblies
(Drum Body, Cover, Locking Ring and Gasket)

National Stock Number	MS Number	Usable Inside Height Nominal	Nom. Cap. Gallons	Inside Diameter Nominal
8110-00-431-8670	MS-27684-1	8.08	3	10.5
8110-00-254-5722	MS-27684-2	12.86	4	10.5
8110-00-254-5713	MS-27684-3	16.74	6	10.5
8110-00-254-5714	MS-27684-5	18.74	7	10.5
8110-00-366-6848	MS-27684-6	21.48	8	10.5
8100-00-254-5715	MS-27684-7	14.19	9	13.81
8110-00-254-5716	MS-27684-8	19.69	12	13.81
8110-00-254-5717	MS-27683-1	19.88	16	15.38
8110-00-753-4643	MS-27683-2	23.88	19	15.38
8110-00-146-1588	MS-27683-3	18.11	20	18.25
8110-00-866-1728	MS-27683-7	26.99	30	18.25
8110-00-044-2984	MS-27683-4	12.89	22	22.50
8110-00-082-2625	MS-27683-5	16.11	27	22.50
8110-01-009-4296	MS-27683-5H	16.11	27	22.50
8110-00-820-0854	MS-27683-11	22.24	38	22.50
8110-00-082-2629	MS-27683-13	26.11	45	22.50
8110-01-087-0518	MS-27683-13H	26.11	45	22.50
8110-00-082-2626	MS-27683-14	33.33	57	22.50
8110-00-180-6012	MS-27683-19	35.77	61	22.50
X	MS-27683-8	15.49	30	24.00
8110-01-129-8506	MS-27683-8H	15.49	30	24.00
X	MS-27683-17	30.74	60	24.00
8110-00-118-5765	MS-27683-23	41.12	80	24.00
X	MS-27683-10	14.73	34	26.00
8110-00-433-1074	MS-27683-16	25.68	59	26.00
X	MS-27683-21	34.43	79	26.00
X	MS-27683-9	11.18	30	28.00
8110-00-082-2624	MS-27683-18	22.43	60	28.00
8110-00-082-2627	MS-27683-22	29.98	80	28.00
X	MS-27683-6	9.46	29	30.00
8110-00-838-4997	MS-27683-12	12.68	39	30.00
8110-00-351-8280	MS-27683-12H	12.68	39	30.00
8110-00-880-7074	MS-27683-15	19.03	58	30.00
8110-00-082-2623	MS-27683-20	25.33	77	30.00

Source: https://assist.dla.mil -- Downloaded: 2016-12-11T06:40Z
Check the source to verify that this is the current version before use.

TABLE [illegible]. [illegible] National Stock Numbers for component parts

Nominal Inside Diameter (Inch)	Nominal Capacity Gallon	Drum Body	Drum Cover * Style #1	Locking Ring * Style #1	Gasket *
10.5	3	MS-27684-11	MS-27684-21	MS-27684-31	MS-27684-25
	4	MS-27684-12	8110-00-841-1634	8110-00-190-9992	
	6	MS-27684-13			
	7	MS-27684-15			
	8	MS-27684-16			
13.81	9	MS-27684-17	MS-27684-23	MS-27684-32	MS-27684-27
	12	MS-27684-18	8110-00-222-3135	8110-00-190-9993	5330-00-062-3899
15.38	16	MS-27683-30	MS-27683-60	MS-27683-80	MS-27683-90
	19	MS-27683-31	8110-00-222-3136	8110-00-190-9994	5330-00-351-1162
18.25	20	MS-27683-32	MS-27683-61	MS-27683-81	MS-27683-91
	30	MS-27683-36	8110-00-865-8779	8110-01-016-7362	5330-00-865-8792
22.50	22	MS-27683-33	MS-27683-62	MS-27683-82	MS-27683-92
	27	MS-27683-34	8110-00-965-9808	8110-00-951-9728	5330-00-062-7420
	38	MS-27683-40			
	45	MS-27683-42			
	57	MS-27683-43			
	61	MS-27683-48			
24.00	30	MS-27683-37	MS-27683-63	MS-27683-83	MS-27683-93
	60	MS-27683-46	8110-00-055-6286	8110-00-055-6285	5330-00-055-6287
	80	MS-27683-52			
26.00	34	MS-27683-39	MS-27683-64	MS-27683-84	MS-27683-94
	59	MS-27683-45	8110-00-059-5361		5330-00-059-5360
	79	MS-27683-50			
28.00	30	MS-27683-38	MS-27683-65	MS-27683-85	MS-27683-95
	60	MS-27683-47	8110-00-065-5794	8110-00-059-5362	5330-01-036-2821
	80	MS-27683-51			
30.00	29	MS-27683-35	MS-27683-66	MS-27683-86	MS-27683-96
	58	MS-27683-44	8110-00-956-9065	8110-00-956-9066	5330-01-097-4963
	77	MS-27683-49			

* NOTE: There are no National Stock Numbers listed for DRUM Cover, Style 2; Locking Ring, Style 2; or for alternate gaskets.

Source: https://assist.dla.mil -- Downloaded: 2016-12-11T06:40Z
Check the source to verify that this is the current version before use.

Custodians:

Army - GL
Navy - AS
Air Force - 69

Review:

Army - MI, SM, AR, EA
Navy - SA
Air Force - 99
DLA - GS

User:

Army - AV
Navy - MS, CG

Preparing Activity:
Air Force - 69
Project Number: 8110-0278

Source: https://assist.dla.mil -- Downloaded: 2016-12-11T06:40Z
Check the source to verify that this is the current version before use.

INSTRUCTIONS In a continuing effort to make our standardization documents better, the DoD provides this form for use in submitting comments and suggestions for improvement. All users of military standardization documents are invited to provide suggestions This form may be detached, folded along the lines indicated, taped along the loose edge *(DO NOT STAPLE)*, and mailed In block 5, be as specific as possible about particular problem areas such as wording which required interpretation, was too rigid, restrictive, loose, ambiguous, or was incompatible, and give proposed wording changes which would alleviate the problems Enter in block 6 any remarks not related to a specific paragraph of the document If block 7 is filled out, an acknowledgement will be mailed to you within 30 days to let you know that your comments were received and are being considered

NOTE This form may not be used to request copies of documents, nor to request waivers, deviations, or clarification of specification requirements on current contracts Comments submitted on this form do not constitute or imply authorization to waive any portion of the referenced document*(s)* or to amend contractual requirements

(Fold along this line)

(Fold along this line)

NO POSTAGE NECESSARY IF MAILED IN THE UNITED STATES

OFFICIAL BUSINESS
PENALTY FOR PRIVATE USE $300

BUSINESS REPLY MAIL
FIRST CLASS PERMIT NO 73236 WASH DC

POSTAGE WILL BE PAID BY HQ U S AIR FORCE

HQ AFLC/DS1ZT
Wright-Patterson AFB OH 45433-5999

Source: https://assist.dla.mil -- Downloaded: 2016-12-11T06:40Z
Check the source to verify that this is the current version before use.

STANDARDIZATION DOCUMENT IMPROVEMENT PROPOSAL

(See Instructions – Reverse Side)

1 DOCUMENT NUMBER	2 DOCUMENT TITLE
MIL-D-6054F	DRUM, METAL-SHIPPING AND STORAGE

3a NAME OF SUBMITTING ORGANIZATION	4 TYPE OF ORGANIZATION *(Mark one)*
	☐ VENDOR
	☐ USER
b ADDRESS *(Street City State ZIP Code)*	☐ MANUFACTURER
	☐ OTHER *(Specify)* _____

5 PROBLEM AREAS

a. Paragraph Number and Wording

b. Recommended Wording

c. Reason/Rationale for Recommendation

6 REMARKS

7 NAME OF SUBMITTER *(Last First MI)* – Optional	b WORK TELEPHONE NUMBER *(Include Area Code)* – Optional
c MAILING ADDRESS *(Street City State ZIP Code)* – Optional	8 DATE OF SUBMISSION *(YYMMDD)*

DD FORM 82 MAR 1426 PREVIOUS EDITION IS OBSOLETE

Source: https://assist.dla.mil -- Downloaded: 2016-12-11T06:40Z
Check the source to verify that this is the current version before use.