NOTE: MIL-STD-633E has been redesignated as a handbook, and is to be used for guidance purposes only. This document is no longer to be cited as a requirement. For administrative expediency, the only physical change from MIL-STD-633E is this cover page. However, this document is no longer to be cited as a requirement. If cited as a requirement, contractors may disregard the requirements of this document and interpret its contents only as guidance.

MIL-HDBK-633
20 FEBRUARY 1998

DEPARTMENT OF DEFENSE

HANDBOOK FOR
MOBILE ELECTRIC POWER
ENGINE GENERATOR STANDARD FAMILY
GENERAL CHARACTERISTICS

AMSC N/A

FSC 6115

Source: https://assist.dla.mil -- Downloaded: 2016-12-11T08:39Z
Check the source to verify that this is the current version before use.

DEPARTMENT OF DEFENSE
Washington, DC 20301

MOBILE ELECTRIC POWER ENGINE GENERATOR STANDARD FAMILY
GENERAL CHARACTERISTICS

1. This Military Standard is mandatory for use by all Departments and Agencies of the Department of Defense.

2. Beneficial comments (recommendations, additions, deletions) and any pertinent data which may be of use in improving this document should be addressed to: Commander, U.S. Army Mobility Equipment Research and Development Command, ATTN: DRDME-DS, Fort Belvoir, Virginia 22060, with a copy to DOD Project Manager- Mobile Electric Power, DRCPM-MEP-T, 7500 Backlick Road, Springfield, Virginia 22150, by using the self-addressed Standardization Document Improvement Proposal (DD Form 1426) appearing at the end of this document or by letter.

Source: https://assist.dla.mil -- Downloaded: 2016-12-11T08:39Z
Check the source to verify that this is the current version before use.

FOREWORD

Preparation of this document has been authorized by the Department of Defense Directive 4120.11 which assigns to the Project Manager, Mobile Electric Power the responsibility for establishing a Military Standard depicting the Department of Defense (DOD) Family of Mobile Electric Power Generating Sources. Military Standard 633E combines MIL-STD-633D and MIL-STD-1650 and revises the Family by the deletion of four items (MEP-lllA, MEP-352A(NC-2A), MEP-355A(NC-8A) and MEP-403A(EMU29)), the addition of two items (MEP-029A and MEP-412A), and the replacement of five A models by three B models (MEP-009B, MEP-009B, and MEP-116B) for future procurement. MEP-356A is assigned to the Air Force A/M32A-60A Ground Support Power Unit and MEP-357A is assigned to the Navy NC-10C Ground Support Power Unit.

The following are extracts from DOD Directive 4120.11:

"IV. POLICIES

A. Maximum use will be made of the established DOD Standard Family of Mobile Electric Power Generating Sources to satisfy military applications with a minimum number of sizes and types in the interest of standardization, availability, interchangeability of parts, maintainability, and reduction of required logistical support.

B. In designing and developing end items and systems requiring electric power from mobile electric power generating sources, DOD Components will consider the characteristics and suitability of the DOD Standard Family of Mobile Electric Power Generating Sources defined in the current series of Military Standards. (MIL-STD'S 633 and 1332).

c. Where mobile electric power generating sources are designed in and procured as an integral part of an end item or system, the System/Project Manager and/or Design Activity shall use the current DOD Standard Mobile Electric Power Generating Sources (MIL-STD-633) to the extent practicable, unless special requirements exist, in which case, the procedures outlined in VI, for deviations shall apply.

VI . DEVIATIONS

DOD Components requiring mobile electric power generating sources other than those available in the standard family and/or covered by or requiring the maintenance of limited coordination specifications or other uncoordinated procurement documents, will so advise and obtain approval from the Project Manager - Mobile Electric Power (PM-MEP) prior to initiating procurement. The Project Manager will expedite action on such requests."

DOD Instruction 4120.12 establishes the fuels policy for engine driven Mobile Electric Power Generating Sources. This policy is reflected in the Fuel Section of the Characteristics Data Sheets.

Source: https://assist.dla.mil -- Downloaded: 2016-12-11T08:39Z
Check the source to verify that this is the current version before use.

CONTENTS

Paragraph		Page
1.	Scope	1
1.1	General	1
1.2	Application	1
2.	Reference Document	2
2.1	Issues of Documents	2
2.2	Other Publications	3
3.	Definitions	4
3.1	Bandwidth	4
3.2	Classification	4
3.3	Deviation Factor	4
3.4	DIP	4
3.5	Failure	4
3.5.1	Relevant Failure	4
3.5.2	Nonrelevant Failure	4
3.6	Harmorfic	5
3.7	Hertz	5
3.8	Mean Time Between Failure(MTBF)	5
3.8.1	Specified MTBF	5
3.9	Mobile Electric Power Generating Sources	5
3.10	Observed Steady-State Band	6
3.11	Overshoot	6
3.12	Prescribed Steady-State Band	6
3.13	Phase Balance Voltage	6
3.14	Rated Load	6
3.15	Reconnectable	6
3.16	Recovery Time	6
3.17	Regulation	5
3.18	Ripple Voltage	6
3.19	Rise	7
3.20	Stability	7
3.21	Steady-State	7
3.22	Undershoot	7
3.23	Primary Inventory Control Activity (PICA)	7
3.24	Definitions of Acronyms used in this Standard	7

Source: https://assist.dla.mil -- Downloaded: 2016-12-11T08:39Z
Check the source to verify that this is the current version before use.

Paragraph		Page
4.	General Requirements	8
4.1	Safety	8
4.1.1	Grounding	8
4.1.2	Fire Protection	8
4.1.3	Noise Protection	8
4.2	Fuel Policy	8
4.3	Delivered Condition	8
4.3.1	Safety Items	8
4.3.2	Batteries	9
4 .3.3	Auxiliary Fuel Line	9
4.3.4	Ether Starting Aid	9
4 .3.5	Parallel Operation	9
4.3.5.1	Paralleling Cables	9
4.3.6	Power Output Terminals	9
4.3.7	Motor Starting Capability	9
4.4	Optional Equipment and Accessories	9
4.4.1	0.5-10 kW Gasoline Engine-Driven Generator Sets	10
4.4.1.1	Canvas Cover	10
4.4.1.2	Winterization Kit	10
4.4.1.3	Spark Arrester Kit	10
4.4.2	5 & 10 kW Diesel Engine-Driven Generator Sets	10
4.4.2.l	Winterization Kit	10
4.4.2.2	Slave Receptacle Assemblies	10
4.4.3	15-200 kW Diesel Engine-Driven Generator Sets	10
4.4 .3.1	Winterization System	10
4 .4.3.2	Optional Electric Winterization Kit	11
4.4.3.3	Optional Fuel Burning Winterization Kit	11
4 .4.3.4	Auxiliary Electric Winterization Kit	11
4.4.3.5	Auxiliary Fuel Burning Winterization Kit	11
4.4 .3.6	Automatic Transfer Panel Kit, 50/60 Hz	12
4.4 .3.7	Automatic Standby Panel Kit, 400 HZ	12
4.4.3.8	Remote Control Box Kit	12
4.4.3.9	Load Bank Kit	13
4.4.3.10	Wheel Mounting Kit	13
4.4.3.11	Spank Arrester Kit	13
4.4.4	500 kW Diesel Engine-Driven GeneraLor Set, MEP-029A	13
4.4.4.1	Housing Kit	13
4.4.4.2	Set Control Module	13
4.4.4.3	Paralleling Control Module	14
4.4.4.4	Remote Control Station	14
4.4.4.5	Remote Control Cable	14
4.4.5	750 kW Diesel Engine-Driven Generator Set, MEP-208A	14

Source: https://assist.dla.mil -- Downloaded: 2016-12-11T08:39Z
Check the source to verify that this is the current version before use.

Paragraph		Page
5.	Detailed Requirements -	15
5.1	MIL-STD-Dash Number Sheets - - - - - - - - - - - - - - - - - -	15
5.1.1	Item Descriptions- -	15
5.1.2	Parametric Valves -	15
5.2	Stock Numbers and Specifications - - - - - - - - - - - - - -	15
6.	Notes- - - - -- -	15
6.1	Generator Set Availability - - - - - - - - - - - - - - - - -	15
6.2	Mobile Electric Power Generating Sources Development Program- -	15
6.3	International Standardization Agreement - - - - - - - - - - -	15
6.4	Army Type Classification - - - - - - - - - - - - - - - - - -	16

TABLES

TABLE I.	Guide to MIL-STD Dash Sheets - - - - - - - - - - - - - - - - -	17
TABLE II.	Generator Set Stock Numbers and Specifications - - - - - -	18

Source: https://assist.dla.mil -- Downloaded: 2016-12-11T08:39Z
Check the source to verify that this is the current version before use.

1. SCOPE

1.1 General. This standard provides detailed information on the physical and electrical characteristics and logistical data on the DOD approved family of mobile electric power engine-driven generator sets.

1.2 Application. The standard has been prepared for use by all Departments and Agencies of the DOD in selecting engine-driven generator sets and ancillary equipment for applications requiring mobile sources of electric power and to assist the PM-MEP in effecting management and standardization of such sources of power within the DOD. The engine-driven generator sets listed herein are the only mobile sets authorized for procurement. DOD components with mobile electric power requirements within the range of 0.5 kW through 750 kW, whose needs cannot be satisfied by one of the listed generator sets, must obtain deviation approval of the Project Manager before taking any procurement action. Special instructions on the preparation and submittal of deviations are contained in the Logistics Joint Operating Procedures AR 700-101, AFR 400-50, NAVMATINST 4120.100A, MCO 11310.8c and DLAR 4120.7 titled Management and Standardization of Mobile Electric Power Generating Sources.

Source: https://assist.dla.mil -- Downloaded: 2016-12-11T08:39Z
Check the source to verify that this is the current version before use.

2. REFERENCED DOCUMENTS

2.1 Issues of Documents. The following documents of the issue in effect on date of invitation for bids or requests for proposal, form a part of this standard to the extent specified herein.

SPECIFICATIONS

FEDERAL

W-R-550	Rod, Ground (With Attachments)

MILITARY

MIL-M-8090	Mobility, Towed Aerospace Ground Equipment, General Requirements for.
MIL-C-22992	- Connector, Plugs and Receptacles, Electrical, Waterproof, Quick Disconnect, Heavy Duty Type Generic Specification for.
MIL-E-52031	Extinguisher, Fire, Vaporizing Liquid: CF^3BR; 2-3/4 pound, with Bracket.
MIL-C-62122	- Cable Assembly, Slave, Electrical, Connectors, Plug and Receptacle.

STANDARDS

MILITARY

MIL-STD-705	- Generator Sets, Engine-Driven, Methods of Tests and Instructions.
MIL-STD-1332	Definitions of Tactical, Prime, Precise, and Utility Terminologies for Classification of the DOD Mobile Electric Generator Set Family.
MS3506	- Connector, Receptacle, External Electric Power, Aircraft, 28 Volt, DC operating Power.

PUBLICATIONS

DOD Instruction 4120.12	Fuels Policy for Engine-Driven Mobile Electric Power Generating Sources.

Source: https://assist.dla.mil -- Downloaded: 2016-12-11T08:39Z
Check the source to verify that this is the current version before use.

(Copies of specifications, standards and publication. required by contractors in connections with specific procurement functions should be obtained from the procuring activity or as directed by the contracting officer.)

2.2 Other publications. The following documents form a part of this standard to the extent specified herein. Unless otherwise indicated, the issue in effect on data of invitation for bids or requests for proposal shall apply.

NATION FIRE PROTECTION ASSOCIATION (NFPA)

No. 10 - Portable Fire Extinguishers
No. 70 - National Electrical Code

Application for copies should be addressed to the National Fire Protection Asscciation, 470 Atlantic Avenue, BostOn, MA 02210.)

NATIONAL ELECTRICAL MANUFACTURERS ASSOCIATION

Standards Publication Pub. No. MG 1 - Motors and Generators.

(Application for copies should be addressed to the National Electrical Manufacturers Association, ATTN: Order Dept., 2101 L Street, NW, Room 300, Washington, DC 20037.)

Source: https://assist.dla.mil -- Downloaded: 2016-12-11T08:39Z
Check the source to verify that this is the current version before use.

3. DEFINITIONS.

3.1 Bandwidth. Bandwidth is the distance between two lines drawn parallel to the axis of chart movement, one each passing through the center points of maximum and minimum trace excursion respectively during any steady-state electrical load condition. Bandwidth may refer to voltage, frequency or speed and is expressed as a percentage of rated voltage, frequency or speed.

3.2 Classification. See MIL-STD-1332 for classification of sets as to type, class, and mode.

3.3 Deviation Factor. The deviation factor of a wave is the ratio of the maximum difference between corresponding ordinates of the wave and of the equivalent sine wave to the maximum ordinate of the equivalent sine wave when the waves are superposed in such a way as to make this maximum difference as small as possible.

3.4 Dip. Voltage dip is the decrease in voltage resulting from sudden application of load to a generator set. It is measured from the mean of the observed steady-state voltage band prior to the load change to the minimum voltage excursion. Voltage dip includes the effects of voltage regulation, whereas undershoot does not.

3.5 Failure. The inability of an item to perform within previously specified limits.

3.5.1 Relevant Failure. A relevant failure is any malfunction which the operator cannot remedy by normal adjustment action using the set controls and OEM equipment and which causes or may cause any or all of the following: Inability to commence operation, cessation of operation or degradation of performance capability of the system/subsystem below designated levels, serious damage to system/subsystem by continued operation; or create serious personnel hazard.

3.5.2 Nonrelevant Failures. Any failure not used to compute set/unit reliability such as:

a. Failures which do not prevent the set/unit from meeting the specified power output requirement, e.g., a panel light burns out.

b. Failures caused by operator error where proper procedures are documented in technical manuals, instruction plates mounted on the set/unit or both; e.g., use of improper lubricant.

c. Secondary failures caused by failures in the powered equipment or other occurrences in the environment when integral protection is not provided against such equipment failure or occurence, e.g., explosion or fire.

Source: https://assist.dla.mil -- Downloaded: 2016-12-11T08:39Z
Check the source to verify that this is the current version before use.

d. Failures which may be corrected by normal operator functions, e.g., readjustment of voltage after the 4-hour long-term stability period.

e. Failures because of characteristics of the load, e.g., waveform distortion caused by saturated inductors.

f. Failures because of design deficiencies when subsequent testing demonstrates that the design deficiency has been corrected.

g. Secondary failures caused by primary failure because of a design deficiency when subsequent testing demonstrates that the design deficiency has been corrected.

h. Failures resulting from operating items beyond requirements, e.g., if ball joints scheduled for replacement at 2500 hours are run to failure to determine mean life, failures after 2500 hours are nonrelevant failures.

3.6. Harmonic. A harmonic is a component of a periodic quantity which is an integral multiple of the fundamental frequency. For example, a component of frequency which is twice the fundamental frequency is called the second harmonic. For an AC generator set, the magnitudes (in percent of fundamental component amplitude) of any harmonics present may not exceed the "individual harmonic" value specified for the set.

3.7 Hertz. Hertz (Hz) is the international unit of frequency now recognized instead of cycles per second.

3.8 Mean Time Between Failure (MTBF). For exponentially distributed failures, the Mean Time Between Failure (MTBF) is the reciprocal of the failure rate. Observed MTBF is equal to the total operating time of the equipment divided by the number of relevant failures. Observed MTBF is also referred to as a point estimate.

3.8.1 Specified MTBF. That value of MTBF which describes the reliability objective of the equipment.

3.9 Mobile Electric Power Generating Sources. Mobile electric power generating sources include all mobile (skid, wheel-mounted or portable), diesel, gasoline, gas turbine, etc., powered engine-driven generator sets, including those that are components of a system which are complete operational equipment assemblages capable of independently producing electric power, or follow-on power sources such as: fuel cells, turbo-alternators and thermoelectric devices, except that electrochemical batteries, fuel cells and thermoelectric devices of less than 1/2 kW rating shall not be included. The fuel supply may be integral or remotely located.

Source: https://assist.dla.mil -- Downloaded: 2016-12-11T08:39Z
Check the source to verify that this is the current version before use.

3.10 Observed Steady-State Band. The observed steady-state band is the actual bandwidth determined by test of the voltage, frequency or speed. The observed steady-state band is differentiated from the prescribed steady-state band in that the prescribed steady-state band is the maximum bandwidth permitted by the specification.

3.11 Overshoot. Overshoot is the surge increase in speed, frequency or voltage above the mean of the observed steady-state band resulting from a sudden decrease in electrical load on a generator set. Overshoot is specified as a percentage of the rated speed, frequency or voltage.

3.12 Prescribed Steady-State Band. The prescribed steady-state band is the bandwidth specified in the procurement document. See observed steady-state band also.

3.13 Phase Balance Voltage. Phase balance voltage is the difference in percent of voltage between the phases of a polyphase generator set when the set is operating at rated voltage, rated frequency, and no load.

3.14 Rated Load. The condition resulting when a generator set is operating at rated frequency, rated voltage, rated current, and rated power factor as specified on the generator name plate. It is normally stated as a given kilowatt value at a given power factor.

3.15 Reconnectable. A reconnectable generator set has provisions for reconnecting the generator phase windings from single phase to three phase and from low voltage to high voltage to voltage depending on the size and type of generator set.

3.16 Recovery Time. Recovery time is the elapsed time from the time the frequency trace leaves the prescribed steady-state band until the trace returns to and remains within the prescribed steady-state band as a result of a load change. The same definition applies to voltage and speed recovery time.

3.17 Regulation. Frequency regulation is the maximum difference between the no-load value of frequency, and the value at any load up to and including rated load. This difference is expressed as percentage of the rated frequency. The voltage regulation is expressed similarly except that the rms value of voltage is used.

3.18 Ripple Voltage. Ripple voltage is the alternating component in the output voltage of a DC generator.

Source: https://assist.dla.mil -- Downloaded: 2016-12-11T08:39Z
Check the source to verify that this is the current version before use.

3.19 Rise. Voltage rise is the surge in voltage resulting from sudden removal of load from a generator set. It is measured from the mean of the observed steady-state voltage band prior to the load change to maximum voltage excursion. Voltage rise includes the effects of voltage regulation, whereas overshoot does not.

3.20 Stability. Frequency stability describes the tendency of the frequency to remain at a constant value. Generally, the instantaneous value of frequency is not constant but varies randomly above and below a mean value. Stability may be described as either short-term or long term depending upon the length of time that the frequency is observed. Another term, bandwidth, describes the limits of these variations. Voltage stability is described similarly

3.21 Steady-State. Steady-state is the operating condition, at constant load, after transients have settled out.

3.22 Undershoot. Undershoot is the surge decrease in speed, frequency, or voltage below the mean of the observed steady-state band resulting from a sudden increase in electrical load on a generator set. Undershoot is specified as a percentage of the rated speed, frequency, or voltage.

3.23 Primary Inventory Control Activity (PICA). The military service designated under this program as the single activity within the DOD responsible for the function of Procurement, Cataloging, Depot Maintenance, and Disposal on an item basis.

3.24 Definition of Acronyms used in this Standard. The following acronyms used in this Standard are defined as follows:

a. ABCA - American, British, Canadian, Australian Standard.

b. NATO - North Altantic Treaty Organization.

c. STANAG - Standardization Agreement (NATO).

d. QSTAG - Quadripartite Standardization Agreement (ABCA).

e. DOD - Department of Defense.

f. GED - Gasoline Engine-driven.

g. DED - Diesel Engine-driven.

h. GTED - Gas Turbine Engine-driven.

i. NSN - National Stock Number.

Source: https://assist.dla.mil -- Downloaded: 2016-12-11T08:39Z
Check the source to verify that this is the current version before use.

4. GENERAL REQUIREMENTS

4.1 Safety.

4.1.1 Grounding. The National Electric Code requires that generator sets operating at a terminal voltage in excess of 150 volts to ground, shall have the frame grounded with a maximum resistance to ground not to exceed 25 ohms (see Article 445-8 and 250-84 of referenced code). If a suitable ground is not available, a three-piece sectional ground rod is available in the DOD supply system that can be used to obtain an adequate ground under most soil conditions. (See 4.3.1)

4.1.2 Fire Protection. Adequate fire protection must be provided in the area in which the generator set will be used. If portable fire extinguishers are used to meet this requirement, they shall conform to NFPA No. 10 for class B (flammable liquids) and class C (hazards involving energized electrical equipment) . Three types of portable fire extinguishers are approved for class B and C hazards - carbon dioxide ($C0_2$) dry chemical (sodium bicarbonate and potassium bicarbonate) and vaporizing liquid (bromotrifluoromethane). (See 4.3.1)

4.1.3 Noise Protection. Adequate hearing protection must be utilized in the vicinity of operating generator sets. Prolonged exposure to the high intensity noise producted by operating generator sets can cause permanent hearing damage or complete loss of hearing.

4.2 Fuel Policy. DOD Instruction 4120.12 establishes the fuels policy for engine driven mobile electric power generating sources. This policy is reflected in the Fuel Section of the Characteristics Data Dash Sheets.

4.3 Delivered Condition. Production generator sets are delivered from the factory essentially in the configuration depicted herein. Operating supplies, optional equipment, and accessories (see 4.4) should be obtained from the responsible DOD supply activity. The following data is furnished to facilitate users of this publication.

4.3.1 Safety Items. Production sets are delivered without fire extinguishers or ground rods; however, as 2-3/4 pound bromotrifluoromethane fire extinguisher is available. It is described by MIL-E-52031 and is identified as NSN 4210-00-555-8837. Ground rods are described by W-R-550A type III, class B. Three 3-foot-sections are identified as NSN 5975-00-878-3791. A ground rod puller is identified as NSN 5120-01-013-1676.

Source: https://assist.dla.mil -- Downloaded: 2016-12-11T08:39Z
Check the source to verify that this is the current version before use.

4.3.2 Batteries. All 5 kW through 750 kW generator sets are furnished with dry charged batteries less electrolyte. Electrolyte is identified as NSN 6810-00-249-9354 (1 gallon containers) or NSN 6810-00-893-8138 (15 gallon containers). MEP-404 (EMU 30) is available with either lead-acid or NICAD batteries.

4.3.3 Auxiliary Fuel Line. A 25 foot auxiliary fuel line is furnished with the 5 kW through 200 kW diesel engine driven generator sets. Fuel lines for the other sets may be ordered or fabricated on site in accordance with drawing 69-668 (30554).

4.3.4 Ether Starting Aid. The 15 kW through 200 kW diesel engine driven generator sets are equipped with an internal ether starting aid for temperatures below 40° F (4.4° C). Ether bottles may be obtained as NSN 2910-00-209-4997.

4.3.5 Parallel Operation. The 15 through 750 kW generator sets are designed for parallel operation as well as single set operation. Additional details on parallel operation are contained in the generator set manuals.

4.3.5.1 Paralleling Cables. Class 1 (precise) sets are supplied with a paralleling cable for interconnection of the voltage regulators and governor systems of the sets to be paralleled.

4.3.6 Power Output Terminals. Power output terminals consist of split-lug terminals with captive nuts. A series of standard power output receptacles (MIL-C-22992) are available through the supply system. The 15-200 kW DED generator sets have two (2) panels that the system designer can use for mounting the standard receptacles. In additon, the US Army Missile Command (MICOM) has cognizance for a series of missile system receptacles for the 15 kW through 60 kW DED generator sets.

4.3.7 Motor Starting Capability. The Class 1 (precise) 15-200 kW diesel engine-driven generator sets are capable of across-the-line starting of a motor rated at one horsepower per kW of set kW rating. The class 2 (utility) 15-200 kW diesel engine-driven generator sets are capable of across-the-line starting of a motor rated at one horsepower per 1-1/2 kW of set kW rating. The starting current rating of the motor is NEMA Code F and the motor being loaded with a flywheel having the inertia equal to that of the motor. Starting is defined as acceleration of the motor to rated speed without tripping any safety device.

4.4 Optional Equipment and Accessories. Description (nomenclature), National Stock Number, DOD Model numbers and other pertinent information are tabulated on the individual MIL-STD dash number sheets.

Source: https://assist.dla.mil -- Downloaded: 2016-12-11T08:39Z
Check the source to verify that this is the current version before use.

4.4.1 0.5-10 kW Gasoline Engine-Driven Generator Sets.

4.4.1.1 Canvas Cover. A canvas tarpaulin is available to protect the set when not in use.

4.4.1.2 Winterization Kit. The winterization kit permits the 3, 5, and 10 kW sets to start and operate at temperatures below -25° F. The kit consists of a nylon cover with a flame retardent coating. A heating torch is used in conjunction ‘with the cover to preheat the oil pan and cylinder heads. The cover remains on the set during operation.

4.4.1.3 Spark Arrester Kit. US Forestry Service approved spark arresters are available for the sets. These kits are required when sets are operated within National Forests or Parks.

4.4.2 5 and 10 kW Diesel Engine-Driven Generator Sets.

4.4.2.1 Winterization Kit. The kit consists of nylon cover with a flame retardant coating. The kit includes a frame that supports the cover while in use. Heat for preheating the engine and oil pan is obtained from a separate heater/battery box assembly. This assembly contains a fuel-fired hot air heater, fuel tank, batteries, and the necessary controls for proper operation of the kit. The cover remains on the set during operation.

4.4.2.2 Slave Receptacle Assemblies. Two slave receptacles are available for mounting on the set skid base. One assembly utilizes the Air Force peculiar three pin MS3506 receptacle while the other assembly utilizes the Army peculiar two pin MIL-C-62122 receptacle.

4.4.3 15-200 kW Diesel Engine-Driven Generator Sets. Technical manual TO 35CA-1-111/TM5-6115-588-14/NAFAC P-8-60l/TM 6115-15/4 contains additional information on the winterization system kits, automatic transfer and standby kits, and the remote control box kit. Technical manuals describing each set also contain information on the load bank kit and wheel mounting kit as well as the winterization system kits.

4.4.3.1 Winterization System. A winterization system utilizes integral set features and components plus either or both of the two optional winterization kits which mount within the set. Optional fuel burning or the electric winterization kits provide the capability of preheating the coolant and lubricating oil in ambient temperatures to -650 F. Set operation is limited, however, if diesel fuel is stored at ambient since DF-A, diesel fuel-artic, has a cloud point of -60° F. External DC power must be used for starting the engine in ambient temperatures below -25° F. This may be obtained from either the auxiliary winterization kits or other slave batteries such as vehicle batteries.

Source: https://assist.dla.mil -- Downloaded: 2016-12-11T08:39Z
Check the source to verify that this is the current version before use.

The electric winterization kit is preferred for maintaining a set in standby condition when electric power is continuously available but fuel burning kits will bring a cold set to operable temperature faster and can be used when no electric power is available.

4.4.3.2 Optional Electric Winterization Kit. This kit uses an external power source to maintain the engine coolant and lubricating oil at normal operating temperatures in situations which require immediate starting of the generator set. With the kit installed, the set is capable of starting, accelerating to a speed and accepting 75 percent of rated load over the temperature range of -65° F to +125 within 20 seconds of start initiation. This assumes temperature stabilization of the set prior to starting. The kit may be installed on a generator set which has been equipped with a fuel burning winterization kit. Power for operation of this kit may be obtained from any 205 to 240 volt, 50/60 Hz or 400 Hz, single phase source. These kits use approximately 3.0 kW for 15, 30 and 60 kW sets, 2.5 kW for 100 kW sets and 4.0 kW for 200 kW sets.

4.4.3.3 Optional Fuel Burning Winterization Kit. The optional fuel burning winterization kit is used to preheat the engine coolant and lubricating oil burning fuel from the generator set fuel tank. If the generator set is equipped with an electric winterization kit, then extra components as listed in the electric winterization kit manual must be provided to accommodate both kits.

4.4.3.4 Auxiliary Electric Winterization Kit. The Auxiliary Electric Winterization Kit is utilized to provide a dependable external source of battery power for starting generator sets in ambient temperatures down to -65° F whenever electric power is available. The kit consists of an insulated container, electric heaters, batteries, battery charger, control circuitry, and slave cable. The heaters maintain the battery electrolyte at a minimum of +32° F after five hours of operation at -65° F. The battery charger maintains both the kit batteries and generator set batteries in a fully charged condition. Power requirement for kit operation is 1.2 kW at 205-240 volts, 50-400 Hz, single phase power.

4.4.3.5 Auxiliary Fuel Burning Winterization Kit. The fuel burning auxiliary winterization kit is utilized to provide a dependable external source of battery power for starting generator sets in ambient temperatures down to -65° F. The kit consists of an insulated container, batteries, hot-air fuel-burning heater, control box, battery charger, control circuitry, slave cable, and integral fuel system. The hot air heater will maintain the battery electrolyte at a minimum temperature of -25° F after one hour of operation at -65° F ambient temperature . The heater is designed to operate on the same fuels as the generator sets. The fuel tank has a sufficient capacity for a continuous operating period of 30 hours at -65° F. The internal kit battery charger can be

Source: https://assist.dla.mil -- Downloaded: 2016-12-11T08:39Z
Check the source to verify that this is the current version before use.

used to recharge both the set batteries and the kit batteries from utility power or the generator set once it is operating.

4.4.3.6 Automatic Transfer Panel Kit, 50/60 Hz. This kit is used to automatically connect a standby generator set to the load in the event of primary power failure. The transfer panel continuously monitors the primary source and when the voltage or frequency decreases to a preset value, it will start the standby generator set, and transfer the load when the generator set frequency and voltage meet minimum requirements. The transfer will be break-before-make, thus there will be a momentary loss of voltage to the load. When primary power returns and meets minimum requirements for a predetermined time, the transfer panel will transfer the load back to the primary power source. After transfer of the load back to the primary power source, the standby generator set will run at no load for five minutes, shut down, and automatically cycle the generator set controls for standby operation. The transfer panel also permits starting of the standby generator set for a test run without disconnecting the load from the primary power source. If during the test run primary power should fail, the load will automatically be transferred to the standby generator set. The transfer panel is fully enclosed and may be wall or base mounted. It is designed for operation in ambient temperatures from +125° F to -65° F and provides power for the electric winterization kits which are required when using this kit to assure starting of the set within 20 seconds. Batteries of the standby generator set are maintained in a fully charged condition by the internal transfer panel battery charger.

4.4.3.7 Automatic Standby Panel Kit, 400 Hz. The automatic standby panel kit is utilized for transferring loads from an operating generator set to a generator set in standby status. When the operating generator set shuts down because of a fault, the standby set will automatically start, close the load contactor, and accept load. An adjustable timer permits setting of the standby generator set cranking time from 10 to 60 seconds. An internal battery charging circuit maintains the standby generator set batteries in a fully charged condition. This standby panel kit differs from the transfer panel kit in that it does not contain a power contactor and is operable only on 400 Hz generator sets.

4.4.3.8 Remote Control Box Kit. The remote control box kit permits starting and stopping of the generator set from a three wire remote station. When the generator set is started utilizing the remote control box, the set will come up to rated speed and the load contactor will close automatically. Use of the remote control box on a utility set requires the installation of the precise relay assembly to prevent the utility set from starting under load.

Source: https://assist.dla.mil -- Downloaded: 2016-12-11T08:39Z
Check the source to verify that this is the current version before use.

4.4.3.9 Load Bank Kit. A load bank kit consists of a balanced three phase, four wire, air cooled, resistive load and is used in conjunction with lightly loaded generator sets. The kit is used to load the set to approximately 50 percent of its rated load to prevent excessive engine carbonizing which occurs at loads less than 40 percent of rated set load. This parasitic load may be selected in increments of 12.5 percent of generator set rating at either 120/208 or 240/416 volts. The load bank also contains provisions for automatic load removal to prevent overloading of the set. Manual reapplication after automatic load removal is required. The kit mounts on either the top or front of the set depending on set rating.

4.4.3.10 Wheel Mounting Kit. The wheel mounting kits provide mobility in accordance with MIL-M-8090 (USAF), Type I, Class 2, Group C. This is adequate for movement over level terrain such as airfields, but mobility over rough terrain requires mounting on tactical trailers or other suitable vehicles. The kit consists of two wheel axle assemblies, one containing a towbar and safety chain and the other containing a mechanical parking brake.

4.4.3.11 Spark Arrester Kit. US Forestry Service approved spark arresters are available for the 15 and 30 kW sets. These kits are required when sets are operated within National Forests or Parks. The 60, 100, and 200 kW sets are not required to have spark arresters since the engines are turbocharged.

4.4.4 500 kW Diesel Engine-Driven Generator Set, MEP-029A.

4.4.4.1 Housing Kit. The housing kit consists of a rainproof enclosure that covers the top, sides, and ends of the set and is removable to permit access for overhaul or replacement of major components. The housing includes doors, covers, and louvers to permit preventive maintenance and operation under specified environmental conditions. Unhoused operation is limited to temperatures above freezing. Use of the engine preheat system in conjunction with the housing kit extends set operation to -25° F (-31.7° C).

4.4.4.2 Set Control Module. The set control module, contained in a free-standing, weatherproof metal enclosure, provides for automatic operation of the generator set. The set control module is capable of sensing and, after an adjustable time delay of 4 to 10 seconds, initiating an unattended starting and transfer sequence when the normal 120 V AC utility supply voltage varies more than ±10 percent and/or the frequency varies more than +3 percent. The set control module can be located at a distance of up to 100 feet from the generator set and contains provision to exercise the automatic sequencing circuitry. If two to six sets are required to support the load, both a paralleling control module and a set control module for each set is required for unattended starting and load transfer.

Source: https://assist.dla.mil -- Downloaded: 2016-12-11T08:39Z
Check the source to verify that this is the current version before use.

4.4.4.3 Paralleling Control Module. The paralleling control module operates in conjunction with the set control module during unattended starting and load transfer when the load requires more than one set to support the load. One paralleling control module is required for each set that is to be operated in parallel. This is in addition to the set control module that is also required for each set. A maximum of six sets may be connected together for automatic sequencing. The paralleling control module is housed in a free-standing, weatherproof metal enclosure.

4.4.4.4. Remote Control Station. The remote control station will allow remote start and stop, monitor, and control of a single set and paralleling with like sets, from a remote location up to 1000 feet away.

4.4.4.5 Remote Control Cable. The remote control cable connects the remote control station to the generator set and includes a telephone line for communication purposes.

4.4.5 750 kW Diesel Engine-Driven Generator Set, MEP-208A. Optional equipment for the 750 kW diesel engine-driven generator set are the same as for the 500 kW diesel engine-driven generator set, MEP-029A (see paragraph 4.4.4) except that the MEP-208A is procured as a housed set and does not require a housing kit.

Source: https://assist.dla.mil -- Downloaded: 2016-12-11T08:39Z
Check the source to verify that this is the current version before use.

5. DETAILED REQUIREMENTS.

5.1 MIL-STD-Dash Number Sheets. Detailed data on DOD standard family engine generator sets are contained in the MIL-STD-633 dash number sheets. Identification numbering of these sheets consists of the basic MIL-STD-633 designator followed by a dash number for each generator set. See Table I for characteristics data sheet identification.

5.1.1 Item description. Data contained in the dash sheets provide adequate physical description and performance characteristics to permit selection of the item best suited for a specific application. Maximum dry weights are cited in the dash sheets. In addition, photographs and outlined drawings are included to facilitate application planning,including plans for mounting on trailers or other platforms.

5.1.2 Parametric Values. The parametric values cited within these dash sheets are the maximum allowable limits over the specified environmental range. Specified parametric values were determined using the test procedures delineated in MIL-STD-705, Generator Sets, Engine-Driven, Methods of Tests and Instructions. For a more complete description, see applicable specifications, drawings, and referenced documents.

5.2 Stock Numbers and Specifications. Mobile electric power generator set National Stock Numbers and Military Specifications are provided in Table II.

6. NOTES

6.1 Generator Set Availability. Users of this Standard are advised to contact the DOD Project Manager - Mobile Electric Power, 7500 Backlick Road, Springfield, Virginia 22150 (AV 354-2057/COM 703-664-2057) to determine the availability of desired generator sets and to assure proper and timely acquisition.

6.2 Mobile Electric Power Generating Source Development Program. A Mobile Electric Power Generating Source (MEPGS) development program is monitored by the DOD Project Manager - Mobile Electric Power. If users of this standard cannot find a suitable generator set within the DOD Mobile Electric Power Engine-Driven Generator Standard Family as presented in this Standard and its associated Dash Number Sheets, they are advised to contact the Project Manager (see Para 6.1) to obtain status of the development program.

6.3 International Standardization Agreement. Certain provisions of this document and associated Dash Number Sheets are the subject of international standardization agreements: ABCA QSTAG 298, ABCA QSTAG 299, NATO STANAG 4134, and NATO STANAG 4135. When change notice, revision, or cancellation of this

Source: https://assist.dla.mil -- Downloaded: 2016-12-11T08:39Z
Check the source to verify that this is the current version before use.

document is proposed which will affect or violate the international agreements concerned, the preparing activity shall take appropriate reconciliation action through international standardization channels, including departmental standardizatin offices, if required.

6.4 Army Type-Classification. Some generator sets included in this document have not been Type Classified for Army use and are identified by "Not Type Classified for Army Use" in the classification section of the Characteristics Data Sheets.

Custodians:
Army - ME
Navy - YD
Air Force - 99

Review Activities:
Army - CR, MI
Navy - MC

User Activities:
Army - CE
Navy - EC, AS
Air Force - 11

Preparing Activity:
Army - ME
PM-MEP

Project No. 6115-0215

Source: https://assist.dla.mil -- Downloaded: 2016-12-11T08:39Z
Check the source to verify that this is the current version before use.

TABLE I

GUIDE TO MIL-STD-633-DASH SHEETS

MIL-STD	Mobile Electric Power Engine Generator Standard Family Generator Set Characteristics Data Sheet	Page
633E-1	MEP-014A, 0.5 kW, 60 Hz, Gasoline Engine-driven	19
633E-2	MEP-019A, 0.5 kW, 400 Hz, Gasoline Engine-driven	23
633E-3	MEP-024A, 0.5 kW, DC, Gasoline Engine-driven	27
633E-4	MEP-015A, 1.5 kW, 60 Hz, Gasoline Engine-driven	31
633E-5	MEP-025A, 1.5 kW, DC, Gasoline Engine-driven	35
633E-6	MEP-016A, 3.0 kW, 60 Hz, Gasoline Engine-driven	39
633E-7	MEP-021A, 3.0 kW, 400 Hz, Gasoline Engine-driven	43
633E-8	MEP-026A, 3.0 kW, DC, Gasoline Engine-driven	47
633E-9	MEP-017A, 5.0 kW, 60 Hz, Gasoline Engine-driven	51
633E-10	MEP-002A, 5.0 kW, 60 Hz, Diesel Engine-driven	55
633E-11	MEP-022A, 5.0 kW, 400 Hz, Gasoline Engine-driven	60
633E-12	MEP-018A; 10 kW, 60 Hz, Gasoline Engine-driven	64
633E-13	MEP-003A, 10 kW, 60 Hz, Diesel Engine-driven	68
633E-14	MEP-412A, 10 kW, 60 Hz, Gas Turbine Engine-driven	73
633E-15	MEP-023A, 10 kW, 400 Hz, Gasoline Engine-driven	78
633E-16	MEP-112A, 10 kW, 400 Hz, Diesel Engine-driven	82
633E-17	MEP-414A, 10 kW, DC, Gas Turbine Engine-driven	87
633E-18	MEP-004A, 15 kW, 50-60 Hz, Diesel Engine-driven	92
633E-19	MEP-103A, 15 kW, 50-60 Hz, Diesel Engine-driven	97
633E-20	MEP-113A, 15 kW, 400 Hz, Diesel Engine-driven	102
633E-21	MEP-005A, 30 kW, 50-60 Hz, Diesel Engine-driven	107
633E-22	MEP-104A, 30 kW, 50-60 Hz, Diesel Engine-driven	112
633E-23	MEP-114A, 30 kW, 400 Hz, Diesel Engine-driven	117
633E-24	MEP-006A, 60 kW, 50-60 Hz, Diesel Engine-driven	122
633E-25	MEP-105A, 60 kW, 50-60 Hz, Diesel Engine-driven	127
633E-26	MEP-115A, 60 kW, 400 Hz, Diesel Engine-driven	132
633E-27	MEP-404A, 60 kW, 400 Hz, Gas Turbine Engine-driven	137
633E-28	MEP-356A, 60 kW, 400 Hz, Gas Turbine Engine-driven	142
633E-29	MEP-357A, 72 kW, 400 Hz, 21 kW, DC Diesel Engine-driven	147
633E-30	MEP-007B, 100 kW, 50-60 Hz, Diesel Engine-driven	152
633E-31	MEP-116B, 100 kW, 400 Hz, Diesel Engine-driven	157
633E-32	MEP-009B, 200 kW, 50-60 Hz, Diesel Engine-driven	162
633E-33	MEP-01lA, 500 kW, 50-60 Hz, Diesel Engine-driven	167
633E-34	MEP-029A, 500 kW, 50-60 Hz, Diesel Engine-driven	170
633E-35	MEP-208A, 750 kW, 50-60 Hz, Diesel Engine-driven	175
633E-36	MEP-409A, 750 kW, 50-60 Hz, Gas Turbine Engine-driven	178
633E-37	*MEP-007A, 100 kW, 50-60 Hz, Diesel Engine-driven	183
633E-38	*MEP-106A, 100 kw, 50-60 Hz, Diesel Engine-driven	188
633E-39	*MEP-116A, 100 kW, 400 Hz, Diesel Engine-driven	193
633E-40	*MEP-009A, 200 kW, 50-60 Hz, Diesel Engine-driven	198
633E-41	*MEP-108A, 200 kW, 50-60 Hz, Diesel Engine-driven	203

* No longer procurable but exists in inventories.

Source: https://assist.dla.mil -- Downloaded: 2016-12-11T08:39Z
Check the source to verify that this is the current version before use.

TABLE II

GENERATOR STOCK NUMBERS AND SPECIFICATIONS

Model MEP-	Description KW Freq Eng Cl	NSN 6115-	Specification
014A	0.5/60/GED/TU	00-923-4469	MIL-G-52732/1
019A	0.5/400/GED/TU	00-940-7862	MIL-G-52732/2
024A	0.5/DC/GED/TU	00-940-7867	MIL-G-52732/3
015A	1.5/60/GED/TU	00-889-1446	MIL-G-52732/4
025A	1.5/DC/GED/TU	00-017-8236	MIL-G-52732/5
016A	3.0/60/GED/TU	00-017-8237	MIL-G-52732/6
021A	3.0/400/GED/TU	00-017-8238	MIL-G-52732/7
026A	3.0/DC/GED/TU	00-017-8239	MIL-G-52732/8
017A	5.0/60/GED/TU	00-017-8240	MIL-G-52732/9
002A	5.0/60/DED/TU	00-465-1044	MIL-G-52889/l
022A	5.0/4/GED/TU	00-017-8241	MIL-G-52732/10
018A	l0/60/GED/TU	00-899-1447	MIL-G-52732/11
003A	l0/60/DED/TU	00-465-1030	MIL-G-52889/2
412A	l0/60/GTED/T		PD, 10 Aug 78
023A	l0/400/GED/TU	00-926-0843	MIL-G-52732/12
112A	l0/400/DED/TU	00-465-1027	PD, 13 Jul 77
414A	10/DC/GTED/TU	00-149-0761	PD, 20 Mar 74
004A	15/50-60/DED/TU	00-118-1241	MIL-G-52884/2
103A	15/50-60/DED/TP	00-118-1245	MIL-G-52884/l
113A	15/400/DED/TP	00-118-1244	MIL-G-52884/3
005A	30/50-60/DED/TU	60-118-1240	MIL-G-52884/5
104A	30/50-60/DED/TP	00-118-1247	MIL-G-52884/4
114A	30/400/DED/TP	00-118-1248	MIL-G-52884/6
006A	60/50-60/DED/TU	00-118-1243	MIL-G-52884/8
105A	60/50-60/DED/TP	00-118-1252	MIL-G-32884/7
115A	60/400/DED/TP	00-118-1253	MIL-G-52884/9
404A	60/400/GTED/TP	00-126-3024	MIL-G-83380
356A	60/400-6/DC/GTED/TP	00-420-8486	MIL-G-38195
357A	72/400-21/DC/DED/TP	00-110-1859	PD, 328AS100
007B	100/50-60/DED/T	01-036-6374	PD, 17 Mar 78
116B	100/4OO/DED/T	01-042-9846	PD, 1 Aug 77
009B	200/50-60/DED/T	01-021-4096	
01lA	500/50-60/DED/TU	00-476-5878	MIL-G-28630
029A	500/50-60/DED/TU	01-030-6085	MIL-G-52880
208A	750/50-60/DED/PU	00-450-5881	MIL-G-82058
409A	750/50-60/GTED/PU	00-450-5885	MIL-G-28670
007A	*l00/50-60/DED/TU	00-133-9101	MIL-G-52884/11
106A	*l00/50-60/DED/TP	00-133-9102	MIL-G-52884/10
116A	*l00/400/DED/TP	00-133-9103	MIL-G-52884/12
009A	*200/50-60/DED/TU	00-133-9104	MIL-G-52884/14
108A	*200/50-60/DED/TP	00-935-8729	MIL-G-52884/13

* No longer procurable but exists in inventories.

Source: https://assist.dla.mil -- Downloaded: 2016-12-11T08:39Z
Check the source to verify that this is the current version before use.

MILITARY STANDARD
MOBILE ELECTRIC POWER
ENGINE GENERATOR STANDARD FAMILY
MEP-014A, 0.5 kW, 60 Hz, GASOLINE ENGINE-DRIVEN GENERATOR SET
CHARACTERISTICS DATA SHEET

CLASSIFICATION

Description: 0.5 kW @ 1.0 power factor, 60 Hz, 120 V

Model:	MEP-014A	Type:	I (tactical)
NSN:	6115-00-923-4469	Class:	2 (utility)
Spec:	MIL-G-52732/l	Mode:	III (60 Hz)

PHYSICAL CHARACTERISTICS

Dimensions: See Figure 1 on page 22.

Weight: 85 lbs (38.6 kg).

Mobility: Mounted on skid base (tubular frame).

Engine: Gasoline. Standard: MS39297. Horsepower: 1.5 @ 3600 RPM. No. of cyl. 1. Cycle: 4. Air cooled. Rope Start. Operating speed: 3600 RPM. Fuel tank capacity: 1 gallon (4 hrs at rated load). Fuel pump lift: 3 feet.

Fuel:
Primary: MIL-G-3056 and VV-G-76 Automotive gasolines.
Emergency fuel: MIL-G-5572, Grades 80/87, 100/130 and 115/145 Aviation gasolines.

Electrical:
Drip proof generator enclosure. Fungus and moisture treatment.
Solid state voltage regulator. Brushless rotary exciter.

Voltage Connection: 60 Hz, 120 V: 2 wire, 1 phase.

Source: https://assist.dla.mil -- Downloaded: 2016-12-11T08:39Z
Check the source to verify that this is the current version before use.

FUNCTIONAL/OPERATIONAL CHARACTERISTICS

Reliability: Mean Time Between Failures (MTBF): 250 hours (specified)

Fuel Consumption: 0.25 gph at rated load

Electromagnetic Interference: Suppressed to MIL-STD-461 limits.

	Voltage	Frequency
Steady State Stability (variation):		
Short Term (30 see)	2% Bandwidth	4% Bandwidth
Long Term (4 hours)	2% Bandwidth	4% Bandwidth
Transient Performance		
Application of rated load	30% Dip	3% Undershoot
recovery	2 Sec	4 Sec
Rejection of rated load	30% Rise	5% Overshoot
recovery	2 Sec	6 Sec
Waveform		
Maximum Deviation factor	8%	
Individual Harmonic	5%	
Regulation	4%	3%

Adjustment Range for Standard Voltage Connections: 120 V Corm: 114 to 126 v

Frequency Adjustment Range: 60 Hz: N/A

ENVIRONMENTAL DATA

Power Output at Environmental Conditions

0.5 kW, 60 Hz, Sea level: Minus 25° F (-31.7° C) to plus 125° F (+51.7° C)
0.5 kW, 60 Hz, 5000 feet: Minus 25° F (-31.7° C) to plus 107° F (+41.7° C)
0.5 kW, 60 Hz, 8000 feet: Minus 25° F (-31.7° C) to plus 95° F (+35.0° C)

Shock and Rough Handling: 10 mph railroad impact. 3 foot drop. Vibration.

Attitude: Operate with base level or inclined no more than 15 degrees from level.

Noise Level: 76 dbA @ 25 feet (estimate).

Source: https://assist.dla.mil -- Downloaded: 2016-12-11T08:39Z
Check the source to verify that this is the current version before use.

OPTIONAL EQUIPMENT .

See 4.4.1 of MIL-STD-633 for additonal information on OPtional equipment"

Description	NSN	Weight lbs (kg)	Effect on Dim
Canvas Cover	6115-00-990-8770	4 (1.814)	Negligible
Spark Arrester Kit	2990-01-032-0755		None

REFERENCE DOCUMENTS

Technical Manuals:

Army	Air Force	Marine Corps	Navy
TM	TO		NAVFAC
5-6115-329-14	35C2-3-440-1		
5-2805-256-14	38G2-102-2	TM-81283-14	P-8-611E
5-2805-256-24P	38G2-102-4	SL-4-81283B	
LO			
5-2805-256-12			

Source: https://assist.dla.mil -- Downloaded: 2016-12-11T08:39Z
Check the source to verify that this is the current version before use.

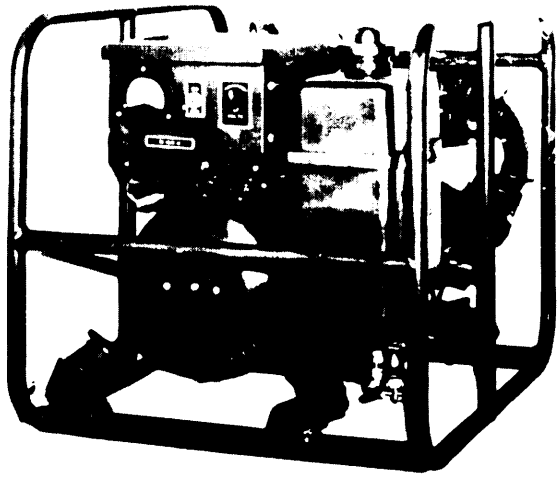

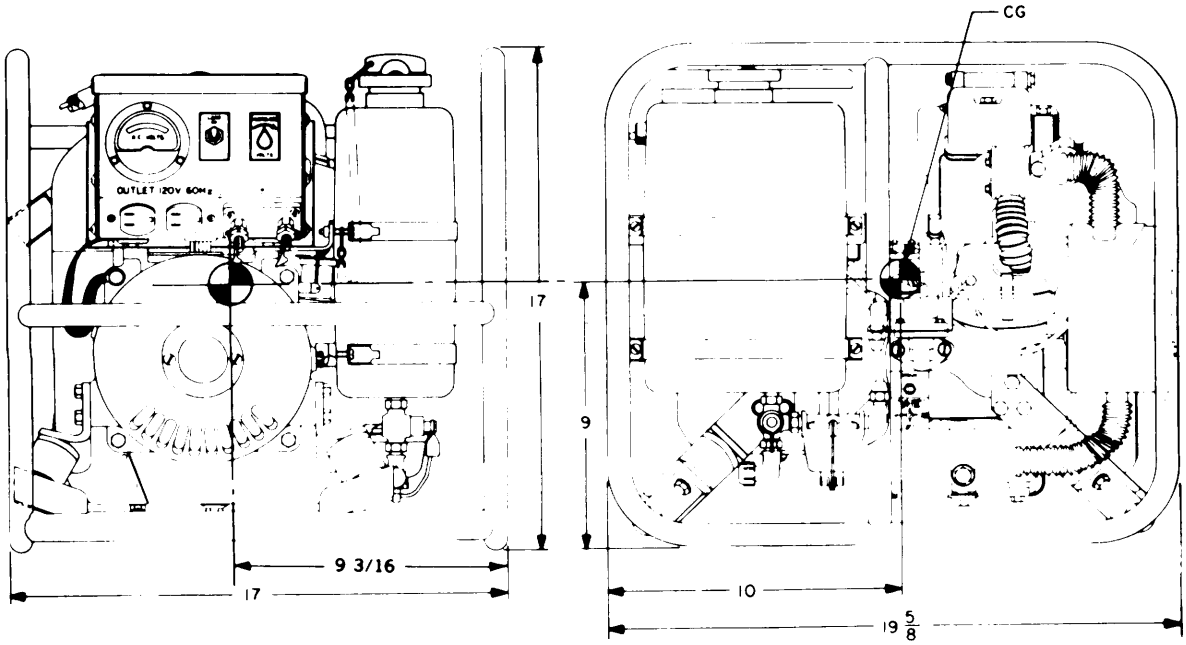

NOTE: ALL DIMENSIONS ARE IN INCHES.

FIGURE 1. MEP-014A (0.5 kw, 60 Hz, GED).

X-3537

Source: https://assist.dla.mil -- Downloaded: 2016-12-11T08:39Z
Check the source to verify that this is the current version before use.

MILITARY STANDARD
MOBILE ELECTRIC POWER
ENGINE GENERATOR STANDARD FAMILY
MEP-019A, 0.5 kW, 400 Hz, GASOLINE ENGINE-DRIVEN GENERATOR SET
CHARACTERISTICS DATA SHEET

CLASSIFICATION

Description: 0.5 kW @ 1.0 power factor, 400 Hz, 120 V

Model:	MEP-019A	Type:	I (tactical)
NSN:	6115-00-940-7862	Class:	2 (utility)
Spec:	MIL-G-52732/2	Mode:	II (400 Hz)

PHYSICAL CHARACTERISTICS

Dimensions: See Figure 2 on page 26.

Weight: 85 lbs (38.6 kg).

Mobility: Mounted on skid base (tubular frame).

Engine: Gasoline. Standard: MS39297. Horsepower: 1.5 @ 3428 RPM No. of cyl: 1. Cycle: 4. Air cooled. Rope start. Operating speed: 3428 RPM, Fuel tank capacity: 1 gallon (4 hrs at rated load). Fuel pump lift: 3 feet.

Fuel:
Primary: MIL-G-3056 and VV-G-76 Automotive gasolines.
Emergency fuel: MIL-G-5572, Grades 80/87, 100/130 and 115/145 Aviation gasolines.

Electrical:
Drip proof generator enclosure. Fungus and moisture treatment.
Solid state voltage regulator. Brushless rotary exciter.

Voltage Connection: 400 Hz, 120 V: 2 wire, 1 phase.

Instrumentation: Voltmeter.

Source: https://assist.dla.mil -- Downloaded: 2016-12-11T08:39Z
Check the source to verify that this is the current version before use.

FUNCTIONAL/OPERATIONAL CHARACTERISTICS

Reliability: Mean Time Between Failures (MTBF): 250 hours (specified)

Fuel Consumption: 0.25 gph at rated load.

Electromagnetic Interference: Suppressed to MIL-STD-461 limits.

	Voltage	Frequency
Steady State Stability (variation)		
Short Term (30 see)	2% Bandwidth	4% Bandwidth
Long Term (4 hours)	2% Bandwidth	4% Bandwidth
Transient Performance		
Application of rated load	30% Dip	3% Undershoot
recovery	2 Sec	4 Sec
Rejection of rated load	30% Rise	5% Overshoot
recovery	2 Sec	6 Sec
Waveform		
Maximum Deviation factor	8%	
Individual Harmonic	5%	
Regulation	4%	3%

Adjustment Range for Standard Voltage Connections: 120 V Corm: 114 to 126 V

Frequency Adjustment Range: 400 Hz: N/A

ENVIRONMENT DATA

Power Output at Environmental Conditions

0.5 kW, 400 Hz, Sea level: Minus 25° F (-31.7° C) to plus 125° F (+51.7° C)
0.5 kW, 400 Hz, 5000 feet: Minus 25° F (-31.7° C) to plus 107° F (+41.7° C)
0.5 kW, 400 Hz, 8000 feet: Minus 25° F (-31.7° C) to plus 95° F (+35.0° C)

Shock and Rough Handling: 10 mph railroad impact. 3 foot drop. Vibration.

Attitude: Operate with base level or inclined no more than 15 degrees from level.

Noise Level: 76 dbA @ 25 feet (estimate).

Source: https://assist.dla.mil -- Downloaded: 2016-12-11T08:39Z
Check the source to verify that this is the current version before use.

OPTIONAL EQUIPMENT

See 4.4.1 of MIL-STD-633 for additional information on optional equipment.

Description	NSN	Weight lbs (kg)	Effect of Dim
Canvas Cover	6115-00-990-8770	4 (1.814)	Negligible
Spark Arrester Kit	2990-01-032-0755		None

REFERENCE DOCUMENTS

Technical Manuals:

Army	Air Force	Marine Corps	Navy
TM	TO		NAVFAC
5-6115-329-14	35C2-3-440-1		
5-2805-256-14	38G2-102-2	TM 81283-14	P-8-611E
5-2805-256-24P	38G2-102-4	SL-4-81283B	
LO			
5-2805-256-12			

Source: https://assist.dla.mil -- Downloaded: 2016-12-11T08:39Z
Check the source to verify that this is the current version before use.

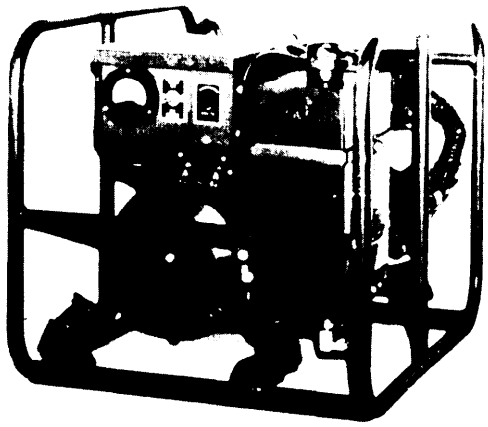

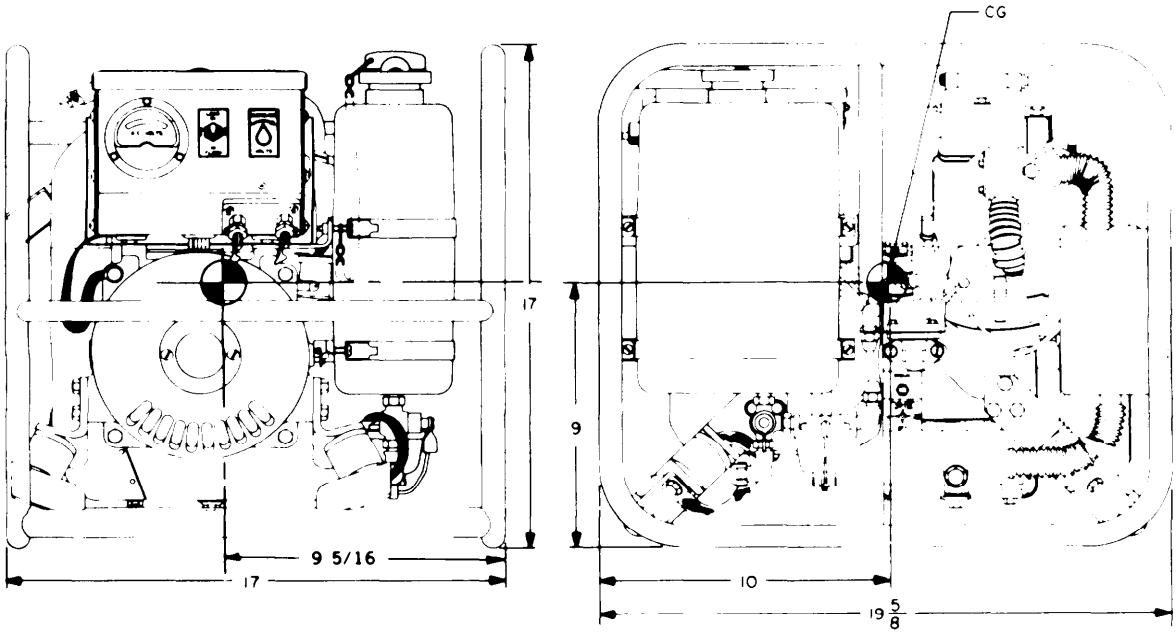

NOTE: ALL DIMENSIONS ARE IN INCHES.

FIGURE 2. MEP-019A (0.5 kw,400 Hz, GED). X-3538

Source: https://assist.dla.mil -- Downloaded: 2016-12-11T08:39Z
Check the source to verify that this is the current version before use.

MILITARY STANDARD
MOBILE ELECTRIC POWER
ENGINE GENERATOR STANDARD FAMILY
MEP-024A, 0.5 kW, 28 VDC, GASOLINE ENGINE-DRIVEN GENERATOR SET
CHARACTERISTICS DATA SHEET

CLASSIFICATION

Description: 0.5 kW, 28 VDC

Model:	MEP-024A	Type:	I (tactical)
NSN:	6115-00-940-7867	Class:	2 (utility)
Spec:	MIL-G-52732/3	Mode:	IV (DC)

PHYSICAL CHARACTERISTICS

Dimensions: See Figure 3 on page 30.

Weight: 85 lbs (38.6 kg).

Mobility: Mounted on skid base (tubular frame).

Engine: Gasoline. Standard: MS39297. Horsepower: 1.5 @ 3600 RPM. No. of cyl 1. Cycle: 4. Air cooled. Rope start. Operating speed: 3600 RPM. Fuel tank capacity: 1 gallon (4 hrs at rated load). Fuel pump lift: 3 feet.

Fuel:
Primary: MIL-G-3056 and VV-G-76 Automotive gasolines.
Emergency fuel: MIL-G-5572, Grade 80/87, 100/130 and 115/145 Aviation gasolines.

Electrical:
Drip proof generator enclosure. Fungus and moisture treatment.
Solid state voltage regulator. Brushless rotary exciter.

Voltage Connection: 28 volts, 2 wire, DC.
Protective Devices: Overload protection. Short circuit protection.
Instrumentation: Voltmeter. Percent-of-load meter (ammeter).

Source: https://assist.dla.mil -- Downloaded: 2016-12-11T08:39Z
Check the source to verify that this is the current version before use.

FUNCTIONAL/OPERATIONAL CHARACTERISTICS

Reliability: Mean Time Between Failure (MTBF): 250 hours (specified)

Fuel Consumption: 0.25 gph at rated load.

Electromagnetic Interference: Suppressed to MIL-STD-461 limits.

	Voltage
Steady State Stability (variation)	
Short Term (30 see)	2% Bandwidth
Long Term (4 hours)	2% Bandwidth
Transient Performance	
Application of rated load	30% Dip
recovery	2 Sec
Rejection of rated load	40% Rise
recovery	2 Sec
Regulation	4 %
DC Voltage Ripple	5.5%

Adjustment Range for Standard Voltage Connections: 23 to 35 v @ +60° F to +85°F
26.6 to 29.4 V @ -25° F to +60° F
+60° F and +85° F to +125° F

ENVIRONMENTAL DATA

Power Output at Environmental Conditions

0.5 kW, DC, Sea Level:	Minus 25° F (-31.7° C) to Plus 125° F (+51.7° C)
0.5 kW, DC, 5000 feet:	Minus 25° F (-31.7° C) to Plus 107° F (+41.7° C)
0.5 kW, DC, 8000 feet:	Minus 25° F (-31.7° C) to plus 95° F (+35.0° C)

Shock and Rough Handling: 10 mph railroad impact. 3 foot drop. Vibration.

Attitude: Operate with base level or inclined no more than 15 degrees from level.

Noise Level: 76 dbA @ 25 feet (estimate).

Source: https://assist.dla.mil -- Downloaded: 2016-12-11T08:39Z
Check the source to verify that this is the current version before use.

OPTIONAL EQUIPMENT

See 4.4.1 of MIL-STD-633 for additional information on optional equipment.

Description	NSN	Weight lbs (kg)	Effect on Dim
Canvas Cover	6115-00-990-8770	4 (1.814)	Negligible
Spark Arrester Kit	2990-01-032-0755		None

REFERENCE DOCUMENTS

Technical Manuals:

Army	Air Force	Marine Corps	Navy
TM	TO		NAVFAC
5-6115-329-14	35C2-3-440-l		
5-2805-256-14	38G2-102-2	TM 81283-14	P-8-611E
5-2805-256-24P	38G2-102-4	SL-4-81283B	
LO			
5-2805-256-12			

Source: https://assist.dla.mil -- Downloaded: 2016-12-11T08:39Z
Check the source to verify that this is the current version before use.

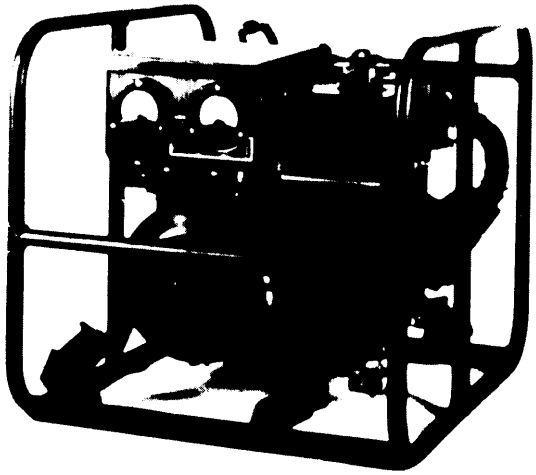

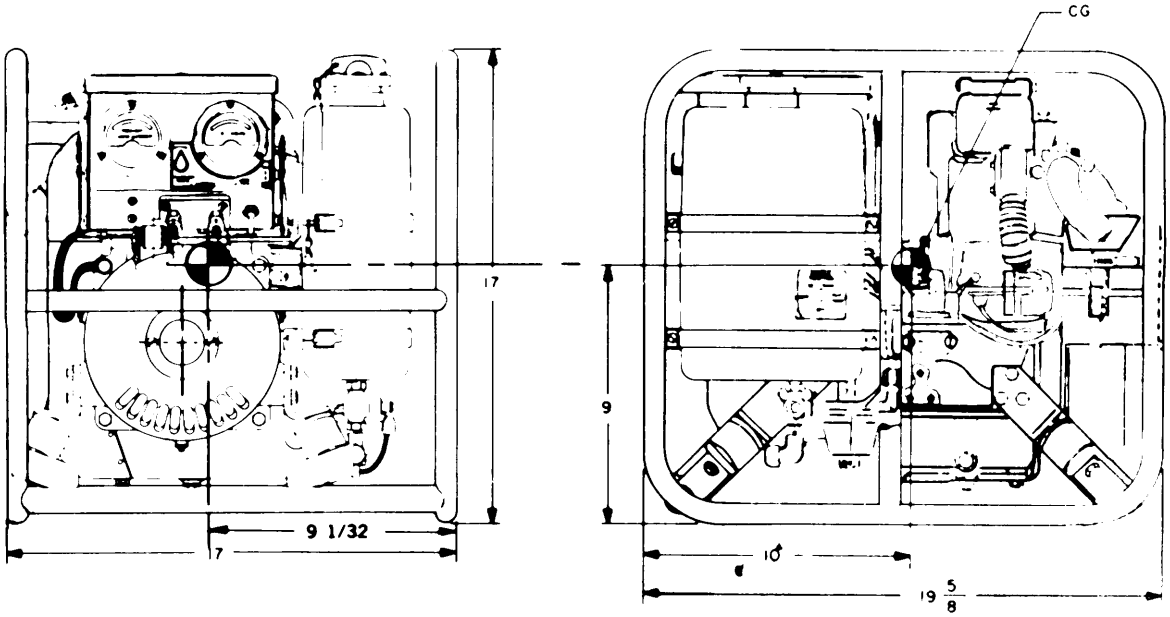

NOTE: ALL DIMENSIONS ARE IN INCHES.

FIGURE 3. MEP-024A (0.5 kw. dc, GED).

X-3539

Source: https://assist.dla.mil -- Downloaded: 2016-12-11T08:39Z
Check the source to verify that this is the current version before use.

MILITARY STANDARD
MOBILE ELECTRIC POWER
ENGINE GENERATOR STANDARD FAMILY
MEP-015A, 1.5 kW, 60 Hz, GASOLINE ENGINE-DRIVEN GENERATOR SET
CHARACTERISTICS DATA SHEET

CLASSIFICATION

Description: 1.5 kW @ 1.0 power factor, 60 Hz, 120/240 V

Model:	MEP-015A	Type:	I (tactical)
NSN:	6115-00-889-1446	Class:	2 (utility)
Spec:	MIL-G-52732/4	Node:	III (60 Hz)

PHYSICAL CHARACTERISTICS

Dimensions: See Figure 4 on page 34.

Weight: 125 lbs (56.7 kg).

Mobility: Mounted on skid base (tubular frame). Lifting attachment provided.

Engine: Gasoline. Standard: MS3929. Horsepower: 3 @ 3600 RPM. No. of cyl 2. Cycle: 4. Air cooled. Rope start. Operating speed: 3600 RPM. Fuel tank capacity: 1-1/2 gallon (approx 3 hrs at rated load). Fuel pump lift: 3 ft.

Fuel:
Primary: MIL-G-3056 and VV-G-76 Automotive gasoline.
Emergency fuel: MIL-G-5572, Grades 80/87, 100/130 and 115/145 Aviation gasolines.

Electrical:
Drip proof generator enclosure. Fungus and moisture treatment.
Solid state voltage regulator. Brushless rotary exciter.

Voltage Connection: 60 Hz, 120 V: 2 wire, 1 phase. 60 Hz, 240 V: 2 wire, 1 phase.

Instrumentation: Voltmeter. Frequency meter.

Source: https://assist.dla.mil -- Downloaded: 2016-12-11T08:39Z
Check the source to verify that this is the current version before use.

FUNCTIONAL/OPERATIONAL CHARACTERISTICS

Reliability: Mean Time Between Failure (MTBF): 250 hours (specified)

Fuel Consumption: 0.54 gph at rated load.

Electromagnetic Interference: Suppressed to MIL-STD-461 limits.

	Voltage	Frequency
Steady State Stability (variation)		
Short Term (30 see)	2% Bandwidth	4% Bandwith
Long Term (4 hours)	2% Bandwidth	4% Bandwith
Transient Performance		
Application of rated load	30% Dip	3% Undershoot
recovery	2 Sec	4 Sec
Rejection of rated load	30% Rise	5% Overshoot
recovery	2 Sec	6 Sec
Waveform		
Maximum Deviation factor	8%	
Individual Harmonic	3.5%	
Regulation: 120V	4$	3%
240V	5%	3%

Adjustment Range for Standard Voltage Connections: 120V Corm: 114 to 126V
240V Corm: 228 to 252V

Frequency Adjustment Range: 60 Hz: N/A

ENVIRONMENTAL DATA

Power Output at Environmental Conditions

1.5 kW, 60 Hz, Sea Level: Minus 25° F (-31.7° C) to plus 125° F (+51.7° C)
1.5 kW, 60 Hz, 5000 feet: Minus 25° F (-31.7° C) to plus 107° F (+41.7° C)
1.5 kW, 60 Hz, 8000 feet: Minus 25° F (-31.7° C) to plus 95° F (+35.0° C)

Shock and Rough Handling: 10 mph railroad impact. 3 foot drop. Vibration.

Attitude: Operate with base level or inclined no more than 15 degrees from level.

Noise Level: 78 dbA @ 25 feet (estimate).

Source: https://assist.dla.mil -- Downloaded: 2016-12-11T08:39Z
Check the source to verify that this is the current version before use.

OPTIONAL EQUIPMENT

See 4.4.1 of MIL-STD-633 for additional information on optional equipment.

Description	NSN	Weight lbs (kg)	Effect on Dim
Canvas Cover	6115-00-941-1655	5 (2.268)	Negligible
Spark Arrester Kit	2990-01-032-0755		None

REFERENCE DOCUMENTS

Technical Manuals:

Army	Air Force	Marine Corps	Navy
TM	TO		NAVFAC
5-6115-323-14	35C2-3-385-1		
5-6115-323-15	35C2-3-385-11		
5-6115-323-24P	35C2-3-385-4	SL4-07609A/07610A	
5-2805-257-14	38G2-103-2	TM 93521A-14A	P-8-612E
5-2805-257-24P	38G2-103-4	SL4-03521A	

Source: https://assist.dla.mil -- Downloaded: 2016-12-11T08:39Z
Check the source to verify that this is the current version before use.

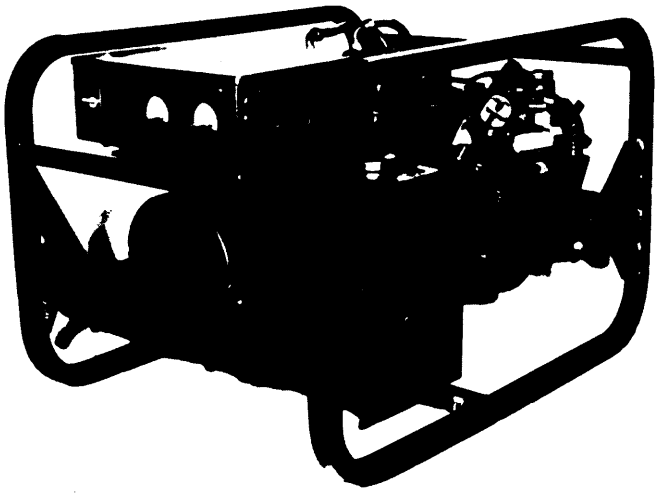

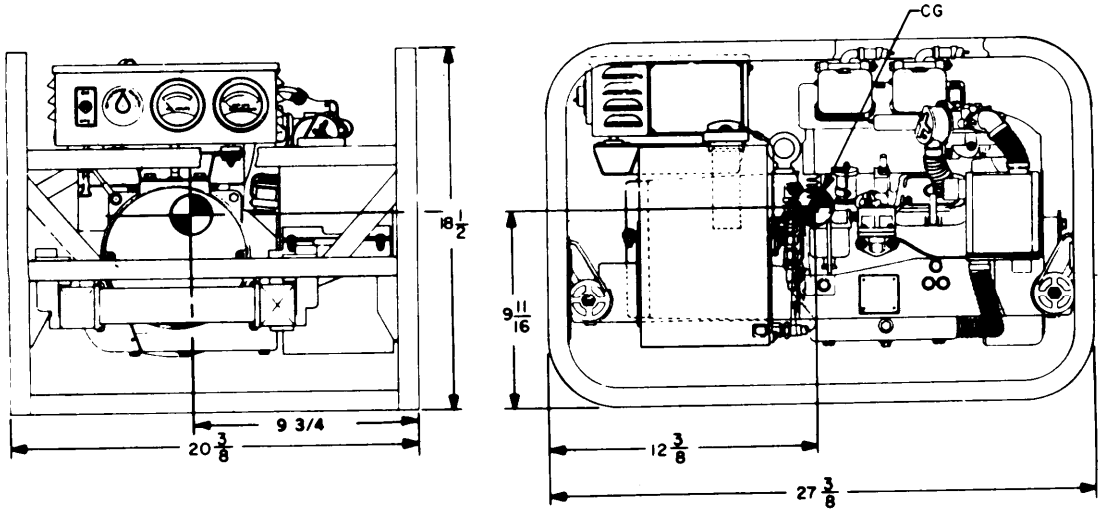

NOTE: ALL DIMENSIONS ARE IN INCHES

FIGURE 4. MEP-015A (1.5 kw, 60 Hz, GED).

Source: https://assist.dla.mil -- Downloaded: 2016-12-11T08:39Z
Check the source to verify that this is the current version before use.

MILITARY STANDARD
MOBILE ELECTRIC POWER
ENGINE GENERATOR STANDARD FAMILY
MEP-025A, 1.5 kW, 28 VDC, GASOLINE ENGINE-DRIVEN GENERATOR SET
CHARACTERISTICS DATA SHEET

CLASSIFICATION

Description: 1.5 kW, 28 VDC

Model:	MEP-025A	Type:	I (tactical)
NSN:	6115-00-017-8236	Class:	2 (utility)
Spec:	MIL-G-52732/5	Mode:	IV (DC)

PHYSICAL CHARACTERISTICS

Dimensions: See Figure 5 on page 38.

Weight: 125 lbs (56.7 kg).

Mobility: Mounted on skid base (tubular frame). Lifting attachment provided.

Engine: Gasoline. Standard: MS39298. Horsepower: 300 @ 3600 RPM. No of cyl 2. Cycle: 4. Air cooled. Rope start. Operating speed: 3600 RPM. Fuel tank capacity: 1.5 gallon (4 hrs at rated load). Fuel pump lift: 3 ft.

Fuel:
Primary: MIL-G-3506 and VV-G-76 Automotive gasoline.
Emergency fuel: MIL-G-5572, Grades 80/87, 100/130 and 115/145 Aviation gasolines.

Electrical:
Drip proof generator enclosure. Fungus and moisture treatment.
Solid state voltage regulator. Brushless rotary exciter.

Voltage Connection: 28 volts, 2 wire, DC.
Protective Devices: Overload protection. Short circuit protection.
Instrumentation: Voltmeter. Percent-of-load meter (ammeter).

Source: https://assist.dla.mil -- Downloaded: 2016-12-11T08:39Z
Check the source to verify that this is the current version before use.

FUNCTIONAL/OPERATIONAL CHARACTERISTICS

Reliability: Mean Time Between Failure (MTBF) 250 hours (specified)

Fuel Consumption: 0.54 gph at rated load.

Electromagnetic Interference: Suppressed to MIL-STD-461 limits.

	Voltage
Steady State Stability (variation)	
Short Term (30 see)	2% Bandwidth
Long Term (4 hours)	2% Bandwidth
Transient Performance	
Application of rated load	30% Dip
recovery	2 Sec
Rejection of rated load	40% Rise
recovery	2 Sec
Regulation:	4%
DC Voltage Ripple	5.5%
Adjustment Range for Standard Voltage Connections:	23 to 35V @ +60° F to +85° F 26.6 to 29.4V @-25° to +60° F and +85° F to +125° F

ENVIRONMENTAL DATA

Power outPut at Environmental Conditions

1.5 kW, DC, Sea Level: Minus 25° F (-31.7° c) to plus 125° F (+51.7° c)
1.5 kW, DC, 5000 feet: Minus 25° F (-31.7° c) to plus 107″ F (+41.7° c)
1.5 kW, DC, 8000 feet: Minus 25° F (-31.7° c) to plus 95° F (+35.0° c)

Shock and Rough Handling 10 mph railroad impact 3 foot drop. Vibration.

Attitude: Operate with base level or inclined no more than 15 degrees from level.

Noise Level: 78 dbA @ 25 feet (estimate).

Source: https://assist.dla.mil -- Downloaded: 2016-12-11T08:39Z
Check the source to verify that this is the current version before use.

OPTIONAL EQUIPMENT

See 4.4.1 of MIL-STD-633 for additional information on optional equipment.

Description	NSN	Weight lbs (kg)	Effect on Dim
Canvas Cover	6115-00-941-1655	5 (2.268)	Negligible
Spark Arrester Kit	2990-01-032-0755		None

REFERENCE DOCUMENTS

Technical Manuals:

Army	Air Force	Marine Corps	Navy
TM	TO		NAVFAC
5-6115-323-14	35C2-3-385-l		
5-6115-323-15	35C2-3-385-11		
5-6115-323-24P	35C2-3-385-4	SL4-07609A/07610A	
5-2805-257-14	38G2-103-2	TM 93521A-14A	P-8-612E
5-2805-257-24P	38G2-103-4	SL4-03521A	

Source: https://assist.dla.mil -- Downloaded: 2016-12-11T08:39Z
Check the source to verify that this is the current version before use.

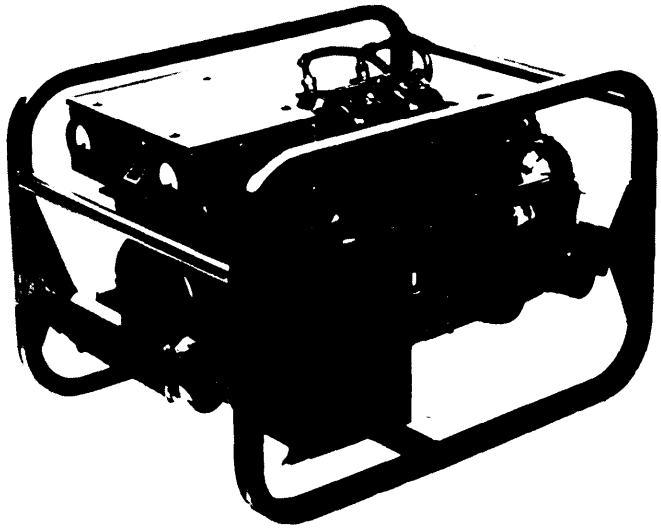

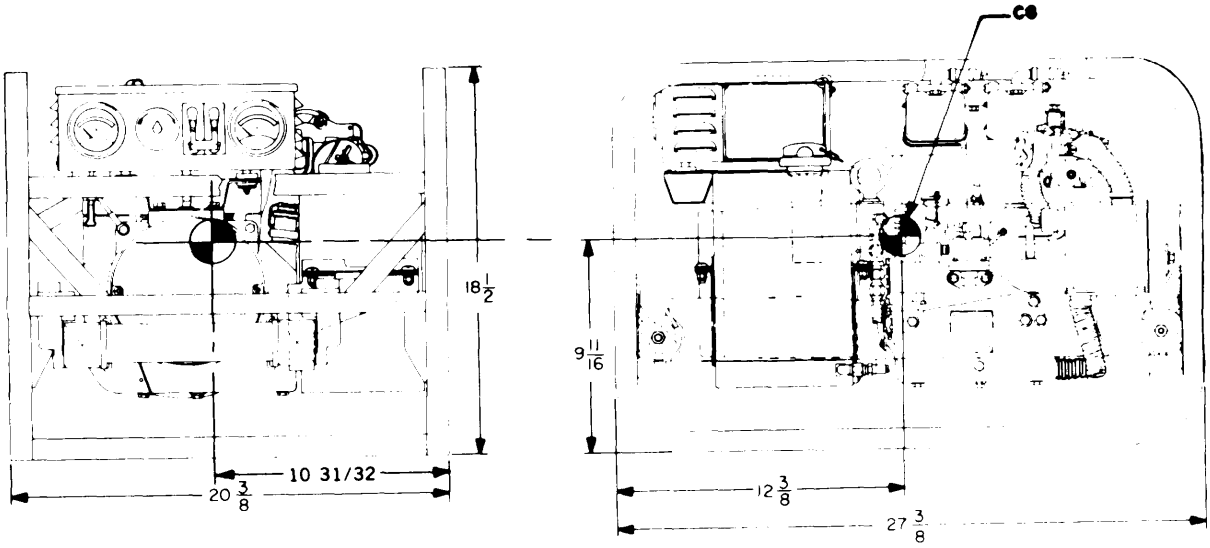

NOTE: ALL DIMENSIONS ARE IN INCHES

FIGURE 5. MEP-025A (1.5 kw, dc, GED).

X-3541

Source: https://assist.dla.mil -- Downloaded: 2016-12-11T08:39Z
Check the source to verify that this is the current version before use.

MILITARY STANDARD
MOBILE ELECTRIC POWER
ENGINE GENERATOR STANDARD FAMILY
MEP-016A, 3 kW, 60 Hz, GASOLINE ENGINE-DRIVEN GENERATOR SET
CHARACTERISTICS DATA SHEET

CLASSIFICATION

Description: 3 kW @ 0.8 power factor, 60 Hz, 120 V, 240 V, 120/208 V.

Model:	MEP-016A	Type:	I (tactical)
NSN:	6115-00-017-8237	Class:	2 (utility)
Spec:	MIL-G-52732/6	Mode:	III (60 Hz)

PHYSICAL CHARACTERISTICS

Dimensions: See Figure 6 on page 42.

Weight: 285 lbs (129.3 kg).

Mobility: Mounted on skid base (tubular frame). Lifting and tie-down attachment provided.

Engine: Gasoline. Standard: MS39299. Horsepower: 6 @ 3600 RPM. No. of cyl: 4. Cycle: 4. Air cooled. Rope start. Operating speed: 3600 RPM. Fuel tank capacity: 3.6 gallon (approx 4 hrs at rated load). Fuel pump lift: 3 ft.

Fuel:
Primary: MIL-G-3056 and VV-G-76 Automotive gasoline.
Emergency fuel: MIL-G-5572, Grades 80/87, 100/130 and 115/145 Aviation gasolines.

Electrical:
Drip proof generator enclosure. Fungus and moisture treatment.
Solid state voltage regulator. Brushless rotary exciter.

Voltage Connection: 120 V, 2 wire, 1 phase. 240 V, 2 wire, 1 phase.
120 V, 3 wire, 3 phase. 120/208 V, 4 wire, 3 phase.

Source: https://assist.dla.mil -- Downloaded: 2016-12-11T08:39Z
Check the source to verify that this is the current version before use.

Protective Devices: Short circuit protection.

Instrumentation: Voltmeter. Frequency meter. Percent-of-load meter (ammeter). Hourmeter.

FUNCTIONAL/OPERATIONAL CHARACTERISTICS

Reliability: Mean Time Between Failure (MTBF): 250 hours (specified)

Fuel Consumption: 0.84 gph at rated load.

Electromagnetic Interference: Suppressed to MII-STD-461 limits.

	Voltage	Frequency
Steady State Stability (variation)		
Short Term (30 see)	2% Bandwidth	1% Bandwidth
Long Term (4 hours)	2% Bandwidth	2% Bandwidth
Transient Performance		
Application of rated load	30% Dip	3% Undershoot
recovery	2 Sec	4 Sec
Rejection of rated load	30% Rise	5% Overshoot
recovery	2 Sec	6 Sec

Waveform		
Maximum Deviation factor	(single phase)	6%
	(three phase)	5%
Individual Harmonic	(single phase)	3%
	(three phase)	3%
Regulation:	4%	3%
(for 240 V, 2 wire)	5%	3%

Adjustment Range for Standard Voltage Connections
120/208 v Corm: 197 to 218 V. 140 V Corm: 228 to 252 V.
120 V, 1 phase Corm: 114 to 126 v. 120 V, 3 phase Conn: 114 to 126 V.

ENVIRONMENTAL DATA

Power Output at Environmental Conditions

3 kW, 60 Hz, Sea Level: Minus 25° F (-31.7° C) to plus 125° F (+51.7° C)
3 kW, 60 Hz, 5000 feet: Minus 25° F (-31.7° C) to plus 107° F (+41.7° C)
3 kW, 60 Hz, 8000 feet: Minus 25° F (-31.7° C) to plus 95° F (+35.0° C)
Winterization system extends lower ambient temperature limit to -65° F (-53.9° C).

Source: https://assist.dla.mil -- Downloaded: 2016-12-11T08:39Z
Check the source to verify that this is the current version before use.

Shock and Rough Handling: 10 mph railroad impact. 3 foot drop. Vibration.

Attitude: Operate with base level or inclined no more than 15 degrees from level.

Noise Level: 79 dbA @ 25 feet (estimate).

OPTIONAL EQUIPMENT

See 4.4.1 of MIL-STD-633 for additional information on optional equipment.

Description	NSN	Weight lbs (kg)	Effect on Dim
Spark Arrester Kit	2990-01-032-7384		None
Winterization Kit			
Canvas Cover	6115-00-960-2703	6 (2.7)	Negligible
Torch	4520-00-710-4341		

REFERENCE DOCUMENTS

Technical Manuals:

Army	Air Force	Marine Corps	Navy
TM	TO		NAVFAC
5-6115-271-14	35C2-3-386-l		
5-6115-271-24P	35C2-3-386-4	SL-4-05926A	
5-2805-203-14	38G2-90-1		
5-2805-203-24P	38G2-90-14	SL-4-03522B	P-8-613E-24P

LO
5-2805-20 3-12

Source: https://assist.dla.mil -- Downloaded: 2016-12-11T08:39Z
Check the source to verify that this is the current version before use.

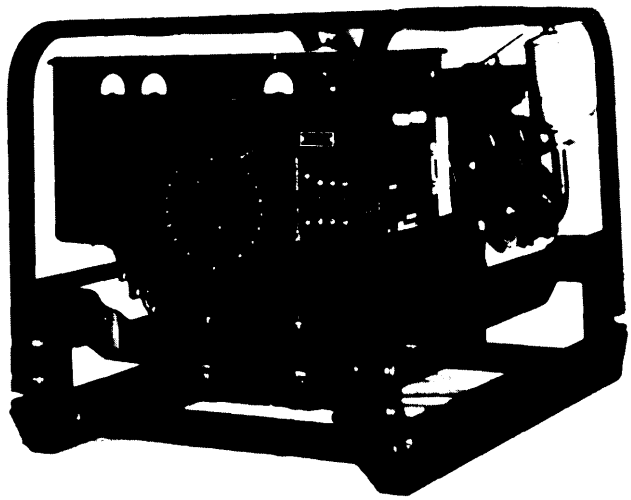

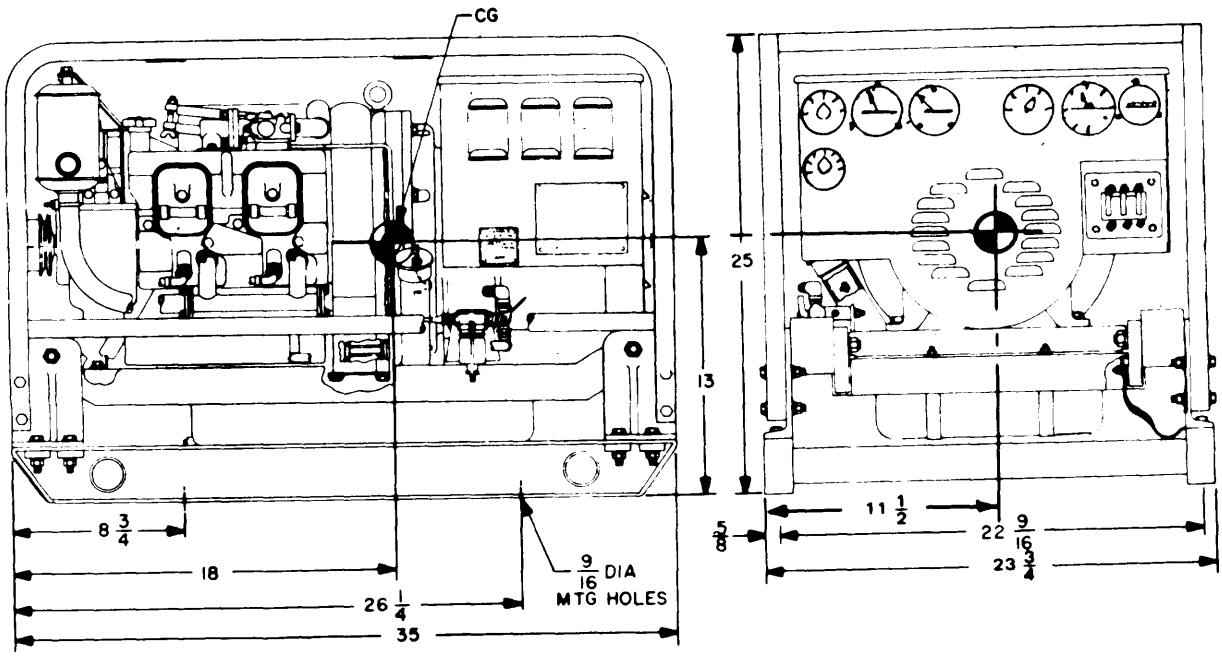

NOTE: ALL DIMENSIONS ARE IN INCHES

FIGURE 6. MEP-016A (3.0 kw, 60 Hz, GED).

x-3542

Source: https://assist.dla.mil -- Downloaded: 2016-12-11T08:39Z
Check the source to verify that this is the current version before use.

MILITARY STANDARD
MOBILE ELECTRIC POWER
ENGINE GENERATOR STANDARD FAMILY
MEP-021A, 3 kW, 400 Hz, GASOLINE ENGINE-DRIVEN GENERATOR SET
CHARACTERISTICS DATA SHEET

CLASSIFICATION

Desription: 3 kW @ 0.8 power factor, 400 Hz, 120 v, 240 V, 120/208v.

Model:	MEP-021A	Type:	I (tactical)
NSN:	6115-00-017-8238	Class:	2 (utility)
spec:	MIL-G-52732/6	Mode:	II (400 Hz)

PHYSICAL CHARACTERISTICS

Dimensions: See Figure 7 on page 46.

Weight: 285 lbs (129.3 kg).

Mobility: Mounted on skid base (tubular frame). Lifting and tie-down attachments provided.

Engine: Gasoline, Standard: MS39299. Horsepower: 6 @ 3428 RPM. No. of cyl: 4. Cycle: 4. Air cooled. Rope start. Operating speed: 3428 RPM. Fuel tank capacity: 3.6 gallon (approx 4 hrs at rated load). Fuel pump lift: 3 ft.

Fuel:
Primary: MIL-G-3056 and VV-G-76 Automotive gasoline.
Emergency fuel: MIL-G-5572, Grades 80/87, 100/130 and 115/145 Aviation gasolines.

Electrical:
Drip proof generator enclosure. Fungus and moisture treatment.
Solid state voltage regulator. Brushless rotary exciter.

Voltage Connection: 120 V, 2 wire, 1 phase. 240 V, 2 wire, 1 phase.
120 V, 3 wire, 3 phase. 120/208 V, 4 wire, 3 phase.

Source: https://assist.dla.mil -- Downloaded: 2016-12-11T08:39Z
Check the source to verify that this is the current version before use.

Protective Devices: Short circuit protection.

Instrumentation: Voltmeter. Frequency meter. Percent-of-load meter (ammeter). Hourmeter.

FUNCTIONAL/OPERATIONAL CHARACTERISTICS

Reliability: Mean Time Between Failures (MTBF): 250 hours (specified)

Fuel Consumption: 0.84 gph at rated load.

Electromagnetic Interference: Suppressed to MIL-STD-461 limits.

	Voltage	Frequency
Steady State Stability (variation)		
Short Term (30 see)	2% Bandwidth	1%Bandwidth
Long Term (4 hours)	2% Bandwidth	2% Bandwidth
Transient Performance		
Application of rated load	30% Dip	3% undershoot
recovery	2 Sec	4 Sec
Rejection of rated load	30% Rise	5% Overshoot
recovery	2 Sec	6 Sec

Waveform		
Maximum Deviation factor	(single phase)	6%
	(three phase)	5%
Individual Harmonic	(single phase)	3%
	(three phase)	3%

Regulation:	4%	3%
(for 240 V, 2 wire)	5%	3%

Adjustment Range for Standard Voltage Connections
120 V, 1 phase Corm: 114 to 126 v. 120 V, 3 phase Conn: 114 to 120 V.

Frequency Adjustment Ranges: 400 Hz, N/A

ENVIRONMENTAL DATA

Power Output at Environmental Conditions

3 kW, 400 Hz, Sea Level: Minus 25° F (-31.7° C) to plus 125° F (+51.7° C)
3 kW, 400 Hz, 5000 feet: Minus 25° F (-31.7° C) to plus 107° F (+41.7° C)
3 kW, 500 Hz, 8000 feet: Minus 25° F (-31.7° C) to plus 95° F (+35.0° C)
Winterization system extends lower ambient temperature limit to -65° F (-53.90 c).

Source: https://assist.dla.mil -- Downloaded: 2016-12-11T08:39Z
Check the source to verify that this is the current version before use.

Shock and Rough Handling: 10 mph railroad impact. 3 foot drop. Vibration.

Attitude: Operate with base level or inclined no more than 15 degrees from level.

Noise Level: 79 dbA @ 25 feet (estimate).

OPTIONAL EQUIPMENT

See 4.4.1 of MIL-STD-633 for additional information on optional equipment.

Description	NSN	Weight lbs (kg)	Effect on Dim
Winterization Kit			
Canvas Cover	6115-00-960-2703	6 (2.7)	Negligible
Torch	4520-00-710-4341		

REFERENCE DOCUMENTS

Technical Manuals:

Army	Air Force	Marine Corps	Navy
TM	TO		NAVFAC
5-6115-271-14	35C2-3-386-l		
5-6115-271-24P	35C2-3-386-4	SL-4-05926A	
5-2805-203-14	38G2-90-1		
5-2805-203-24P	38G2-90-14	SL-4-03522B	P-8-613E-24P
LO			
5-2805-203-12			

Source: https://assist.dla.mil -- Downloaded: 2016-12-11T08:39Z
Check the source to verify that this is the current version before use.

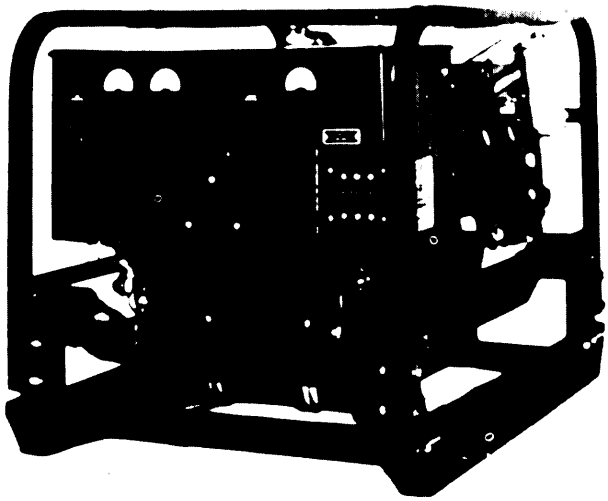

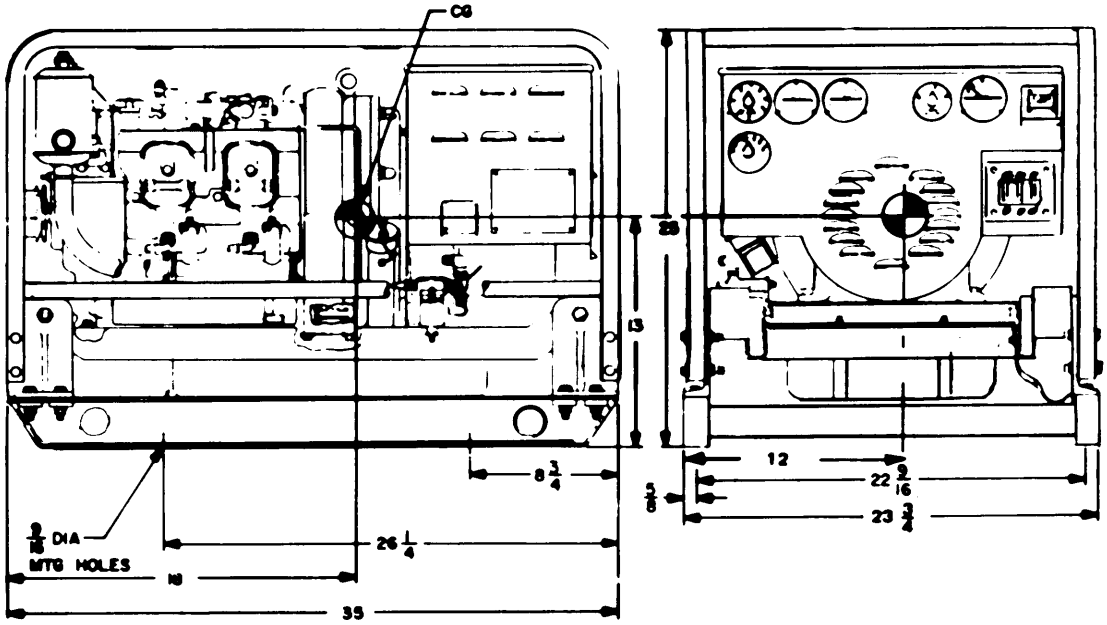

FIGURE 7, MEP-021A (3.0 kw, 400 Hz, GED).

X-3543

Source: https://assist.dla.mil -- Downloaded: 2016-12-11T08:39Z
Check the source to verify that this is the current version before use.

MILITARY STANDARD
MOBILE ELECTRIC POWER
ENGINE GENERATOR STANDARD FAMILY
MEP-026A, 3 kw, 28 VDC, GASOLINE ENGINE-DRIVEN GENERATOR SET
CHARACTERISTICS DATA SHEET

CLASSIFICATION

Description: Rating 3 kW, 28 VDC

Model:	MEP-026A	Type:	I (tactical)
NSN:	6115-00-017-8239	Class:	2 (utility)

PHYSICAL CHARACTERISTICS

Dimensions: See Figure 8 on page 50.

Weight: 285 lbs (129.3 kg).

Mobility: Mounted on skid base (tubular frame). Lifting and tie-down attachments provided.

Engine: Gasoline. Standard: MS39299. Horsepower: 6 @ 3600 RPM. No. of cyl: 4. Cycle: 4. Air cooled. Rope start. Operating speed: 3600 RPM. Fuel tank capacity: 3.6 gallon (approx 4 hrs at rated load). Fuel pump lift: 3 ft.

Fuel:
Primary: MIL-G-3056 and VV-G-76 Automotive gasoline.
Emergency fuel: MIL-G-5572, Grades 80/87, 100/130 and 115/145 Aviation gasolines.

Electrical:
Drip proof generator enclosure. Fungus and moisture treatment.
Solid state voltage regulator. Brushless rotary exciter.

Voltage Connection: 28 V, 2 wire, DC.

Source: https://assist.dla.mil -- Downloaded: 2016-12-11T08:39Z
Check the source to verify that this is the current version before use.

Protective Devices: Short circuit protection.

Instrumentation: Voltmeter. Percent-of-load meter (ammeter). Hourmeter.

FUNCTIONAL/OPERATIONAL CHARACTERISTICS

Reliability: Mean Time Between Failures (MTBF): 250 hours (specified)

Electromagnetic Interference: Suppressed to MIL-STD-461 limits.

	Voltage
Steady State Stability (variation)	
Long Term (4 hours)	2% Bandwidth
Transient Performance	
Application of rated load	30% Dip
recovery	2 Sec
Rejection of rated load	40% Rise
recovery	2 Sec
Regulation:	4%
Ripple	5.5%

Adjustment Range for Standard Voltage Connections
23 to 35 V for +60° F to +85°F
26.6 to 29.4 V for -65° F to +60° F and +85° F to +125°F.

ENVIRONMENTAL DATA

Power Output at Environmental Conditions

3 kW, DC, Sea Level: Minus 25° F (-31.7° C) to plus 125° F (+51.7° C)
3 kW, DC, 5000 feet: Minus 25° F (-31.7° C) to plus 107° F (+41.7° C)
3 kW, DC, 8000 feet: Minus 25° F (-31.7° C) to plus 95° F (+35.0° C)
Winterization system extends lower ambient temperature limit to -65° F (-53.9° C).

Shock and Rough Handling: 10 mph railroad impact. 3 foot drop. Vibration

Attitude: Operate with base level or inclined no more than 15 degrees from level.

Noise Level: 79 dbA @ 25 feet.

Source: https://assist.dla.mil -- Downloaded: 2016-12-11T08:39Z
Check the source to verify that this is the current version before use.

OPTIONAL EQUIPMENT

See 4.4.1 of MIL-STD-633 for additional information on optional equipment.

Decription	NSN	Weight lbs (kg)	Effect on Dim
Winterization Kit			
Canvas Cover	6115-00-960-2703	6 (2.7)	Negligible
Torch	4520-00-710-4341		

REFERENCE DOCUMENTS

Technical Manuals:

Army	Air Force	Marine Corps	Navy
TM	TO		NAVFAC
5-6115-271-14	35C2-3-386-1		
5-6115-271-24P	35C2-3-386-4	SL-4-05926A	
5-2805-203-24P	38G2-90-14	SL-4-03522B	P-8-613E-24P
LO			
5-2805-203-12			

Source: https://assist.dla.mil -- Downloaded: 2016-12-11T08:39Z
Check the source to verify that this is the current version before use.

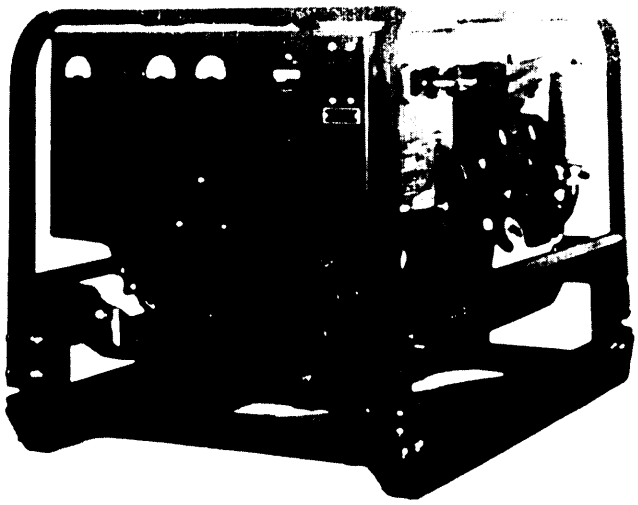

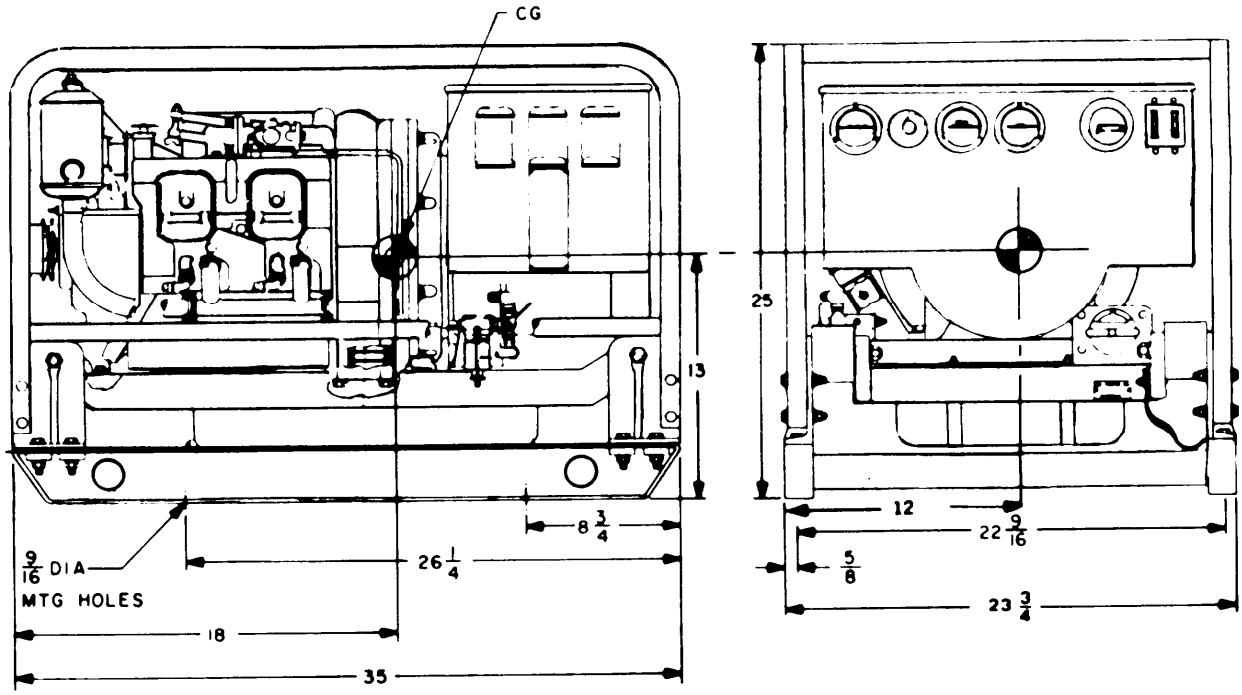

NOTE: ALL DIMENSIONS ARE IN INCHES.

FIGURE 8. MEP-026A (3.0 kw, dc, GED).

X-3544

Source: https://assist.dla.mil -- Downloaded: 2016-12-11T08:39Z
Check the source to verify that this is the current version before use.

MILITARY STANDARD
MOBILE ELECTRIC POWER
ENGINE GENERATOR STANDARD FAMILY
MEP-017A, 5 kW, 60 Hz, GASOLINE ENGINE-DRIVEN GENERATOR SET
CHARACTERISTICS DATA SHEET

CLASSIFICATION

Description: 5 kW @ 0.8 power factor, 60 Hz, 120 V, 240 V, 120/208 V.

Model:	MEP-017A	Type:	I (tactical)
NSN:	6115-00-017-8240	Class:	2 (utility)
Spec:	MIL-G-52732/9	Mode:	III (60 Hz)

PHYSICAL CHARACTERISTICS

Dimensions: See Figure 9 on page 54.

Weight: 488 lbs (221.4 kg).

Mobility: Mounted on skid base (tubular frame). Lifting and tie-down attachment provided.

Engine: Gasoline. Standard: MS39300. Horsepower: 10 @ 3600 RPM. NO. Of cyl: 2. Cycle: 4. Air cooled. Rope and 24 VDC electric start. Operating speed: 3600 RPM. Fuel tank capacity: 5 gallon (approx 3.5 hrs at rated load). Fuel pump lift: 6 ft.

Fuel:
Primary: MIL-G-3056 and VV-G-76 Automotive gasoline.
Emergency fuel: MIL-G-5572, Grades 80/87, 100/130 and 115/145 Aviation gasolines.

Electrical:
Drip proof generator enclosure. Fungus and moisture treatment.
Solid state voltage regulator. Brushless rotary exciter.

Voltage Connection: 120 V, 2 wire, 1 phase. 240 V, 2 wire, 1 phase.
120 V, 3 wire, 3 phase. 120/208 V, 4 wire, 3 phase.

Source: https://assist.dla.mil -- Downloaded: 2016-12-11T08:39Z
Check the source to verify that this is the current version before use.

Protective Devices: Short circuit protection. Low oil pressure cut-off switch.

Instrumentation: Voltmeter. Frequency meter. Percent-of-load meter (current). Hourmeter. Oil pressure gage. Battery charging ammeter.

FUNCTIONAL/OPERATIONAL CHARACTERISTICS

Reliability: Mean Time Between Failures (MTBF): 250 hours (specified)

Fuel Consumption: 1.4 gph at rated load.

Electromagnetic Interference: Suppressed to MIL-STD-461 limits.

	Voltage	Frequency
Steady State Stability (variation)		
Short Term (30 see)	2% Bandwidth	1% Bandwidth
Long Term (4 hours)	2% Bandwidth	2% Bandwidth
Transient Performance		
Application of rated load	30% Dip	3% Undershoot
recovery	2 Sec	4 Sec
Rejection of rated load	30% Rise	5% Overshoot
recovery	2 Sec	6 Sec

Waveform		
Maximum Deviation factor	(single phase)	6%
	(three phase)	5%
Individual Harmonic	(single phase)	3%
	(three phase)	3%

Regulation:	4%	3%
(for 240 V, 2 wire connection)	5%	3%

Adjustment Range for Standard Voltage Connections

120/208 v Corm: 197 to 218 V. 240 V Corm: 228 to 252 V.
120 V, 1 phase Corm: 114 to 126 V. 120 V, 3 phase Conn: 114 to 126 v.

Frequency Adjustment Ranges: 60 Hz: N/A

ENVIRONMENTAL DATA

Power Output at Environmental Conditions

5 kW, 60 Hz, Sea Level: Minus 25° F (-31.7° C) to Plus 125° F (+51.7° C)
5 kW, 60 Hz, 5000 feet: Minus 25° F (-31.7° C) to Plus 107° F (+41.7° C)
5 kW, 60 Hz, 8000 feet: Minus 25° F (-31.7° C) to Plus 95° F (+35.0° C)
Winterization system extends lower temperature limit to -65° F (-53.9° C).

Source: https://assist.dla.mil -- Downloaded: 2016-12-11T08:39Z
Check the source to verify that this is the current version before use.

Shock and Rough Handling: 10 mph railroad impact. 3 foot drop. Vibration.

Attitude: Operate with base level or inclined no more than 15 degrees from level.

Noise Level: 82 dbA @ 25 feet.

OPTIONAL EQUIPMENT

See 4.4.1 of MIL-STD-633 for additional information on optional equipment.

Description	NSN	Weight lbs (kg)	Effect on Dim
Spark Arrester Kit	2990-01-032-0757		None
Winterization Kit			
Canvas Cover	6115-00-945-7545	8 (3.6)	Negligible
Torch	4520-00-710-4341		Negligible

REFERENCE DOCUMENTS

Technical Manuals:

Army	Air Force	Marine Corps	Navy
TM	TO		NAVFAC
5-6115-332-14	35C2-3-424-l		P-8-614-14
5-6115-332-24P	35C2-3-424-24		
5-2805-258-14	38G2-89-21	TM-03523B-14	
5-2805-258-24P	38G2-89-34	SL-4-035-23B	

Source: https://assist.dla.mil -- Downloaded: 2016-12-11T08:39Z
Check the source to verify that this is the current version before use.

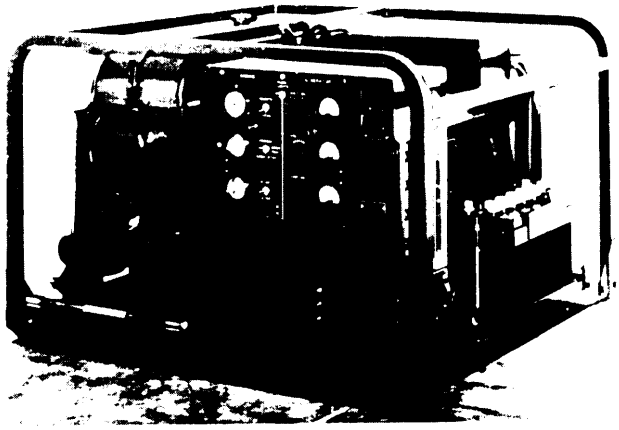

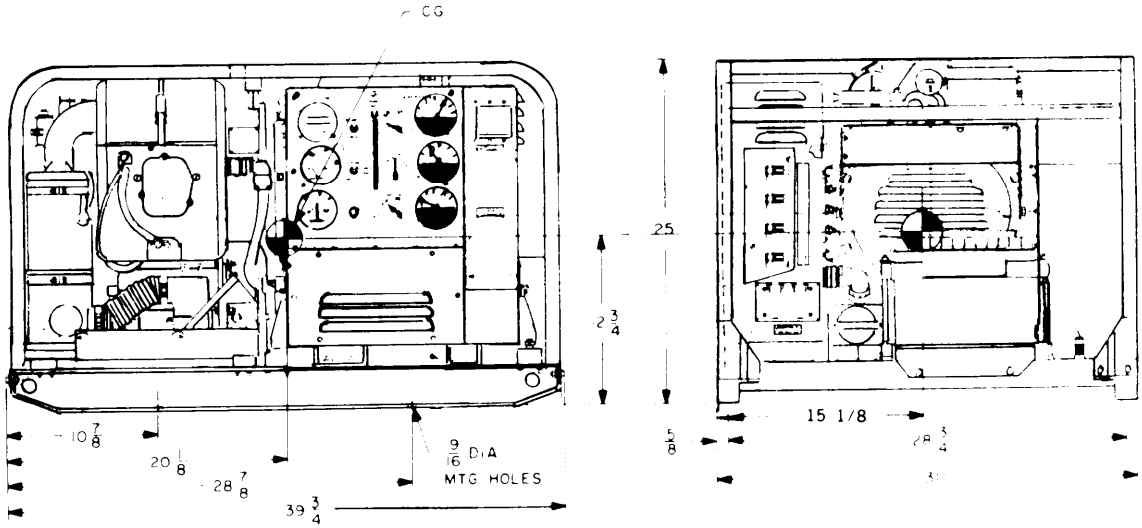

NOTE: ALL DIMENSIONS ARE IN INCHES

FIGURE 9. MEP-017A (5.0 kw, 60 Hz, GED).

x-3545

Source: https://assist.dla.mil -- Downloaded: 2016-12-11T08:39Z
Check the source to verify that this is the current version before use.

MILITARY STANDARD
MOBILE ELECTRIC POWER
ENGINE GENERATOR STANDARD FAMILY
MEP-002A, 5 kW, 60 Hz, DIESEL ENGINE-DRIVEN GENERATOR SET
CHARACTERISTICS DATA SHEET

CLASSIFICATION

Description: 5 kW @ 0.8 power factor, 60 Hz, 120 V, 240 V, 120/208 V

Model:	MEP-002A	Type:	I (tactical)
NSN:	6115-00-465-1044	Class:	2 (utility)
Spec:	MIL-G-52889/l	Mode:	III (60 Hz)

PHYSICAL CHARACTERISTICS

Dimensions: See Figure 10 and 11 on pages 58 and 59.

Weight: 930 lbs (421.8 kg).

Mobility: Mounted on skid base. Lifting towing and tie-down attachments provided. Fork lift provision.

Engine: Diesel. Std: MIL-STD-1410. Horsepower: 9.0 @ 1800 RPM. No. of cyl: 2. 2. Cycle: 4. Air cooled. 24 VDC electric start. Operating speed: 1800 RPM. Fuel tank capacity: 6.75 gallon (approx 8 hrs at rated load). Fuel pump lift: 6 feet.

Fuel:
Primary: VV-F-800, Diesel Fuel Oil, Type DF-1, DF-2 and DF-A.
Emergency fuel: MIL-T-5624, Aviation Turbine Fuels, Grade JP-4.

Electrical:
Drip proof generator enclosure. Fungus and moisture treatment.
Solid state voltage regulator. Brushless rotary exciter.

Voltage Connection: 120 V, 1 phase, 2 wire. 120/240 V, 1 phase, 3 wire
120/208 V, 3 phase, 4 wire.

Source: https://assist.dla.mil -- Downloaded: 2016-12-11T08:39Z
Check the source to verify that this is the current version before use.

Protective Devices: Shore circuit protection. Overload protection. Low oil pressure cut-off switch. High temperature cut-off switch.

Instrumentation: Voltmeter. Frequency meter. Ammeter. Hourmeter. Oil pressure gage. Battery charging ammeter.

FUNCTIONAL/OPERATIONAL CHARACTERISTICS

Reliability: Mean Time Between Failures (MTBF): 500 hours (specified)

Fuel Consumption: 0.57 gph at rated load.

Electromagnetic Interference: Suppressed to MIL-STD-461 limits.

	Voltage	Frequency
Steady State Stability (variation)		
Short Term (30 see)	2% Bandwidth	2% Bandwidth
Long Term (4 hours)	4% Bandwidth	3% Bandwidth
Transient Performance		
Application of rated load	20% Dip	3% Undershoot
recovery	3 Sec	3 Sec
Rejection of rated load	20% Rise	4% Overshoot
recovery	3 Sec	3 Sec
Application of simulated motor load	35% Dip	
recovery	5% Sec	
Waveform		
Maximum Deviation Factor (single phase)	6%	
(three phase)	5%	
Individual Harmonic (single phase)	3%	
(three phase)	2%	
Regulation:	3%	3 %

Adjustment Range for Standard Voltage Connections
120/208 V Corm: 205 to 220 V. 120/240 V Corm: 228 to 252 V.
120 V, 1 phase Corm: 114 to 126 V.

Frequency Adjustment Range: 60 Hz: ±3%

Source: https://assist.dla.mil -- Downloaded: 2016-12-11T08:39Z
Check the source to verify that this is the current version before use.

ENVIRONMENTAL DATA

Power Output at Environmental Conditions

5 kW, 60 Hz, Sea Level: Minus 25° F (-31.7° C) to plus 125° F (+51.7° C)
5 kW, 60 Hz, 5000 feet: Minus 25° F (-31.7° C) to plus 107° F (+41.7° C)
4.5 kW, 60 Hz, 8000 feet: Minus 25° F (-31.7° C) to plus 95° F (+35.0° C)
Winterization system extends lower temperature limit to -65° F (-53.9° C).

Shock and Rough Handling: 10 mph railroad impact. 12 inch drop. 12 inch end drop. Truck and trailer transportation.

Attitude: Operate with base level or inclined no more than 15 degrees from level.

Noise Level: 79 dbA @ 25 feet.

OPTIONAL EQUIPMENT

See 4.4.2 of MIL-STD-633 for additional information on optional equipment.

Description	NSN	Weight lbs (kg)	Effect on Dim
Winterization Kit			
Aux, Fuel Burning	To be determined	350 (158.8) max	Aux: (41x40x26)
Slave Receptacle Assembly (MS3506)	5935-00-549-4690		Int
Slave Receptacle Assembly (MS75058)	5935-00-295-6403		Int

PRIMARY INVENTORY CONTROL POINT

US Army Troop Support & Aviation Materiel Readiness Command
4300 Goodfellow Boulevard
St. Louis, MO 63120

REFERENCE DOCUMENTS

Technical Manuals:

Army	Air Force	Marine Corps	Navy
TM	TO		NAVFAC
5-6115-584-12	35C2-3-456-1	TM-05682C-12	P-8-622-12
5-6115-584-34	35C2-3-456-2	TM-05682C-34	P-8-622-34
5-6115-584-24P	35C2-3-456-4	SL-4-05682C	P-8-622-24P
LO			
5-6115-584-12			

Source: https://assist.dla.mil -- Downloaded: 2016-12-11T08:39Z
Check the source to verify that this is the current version before use.

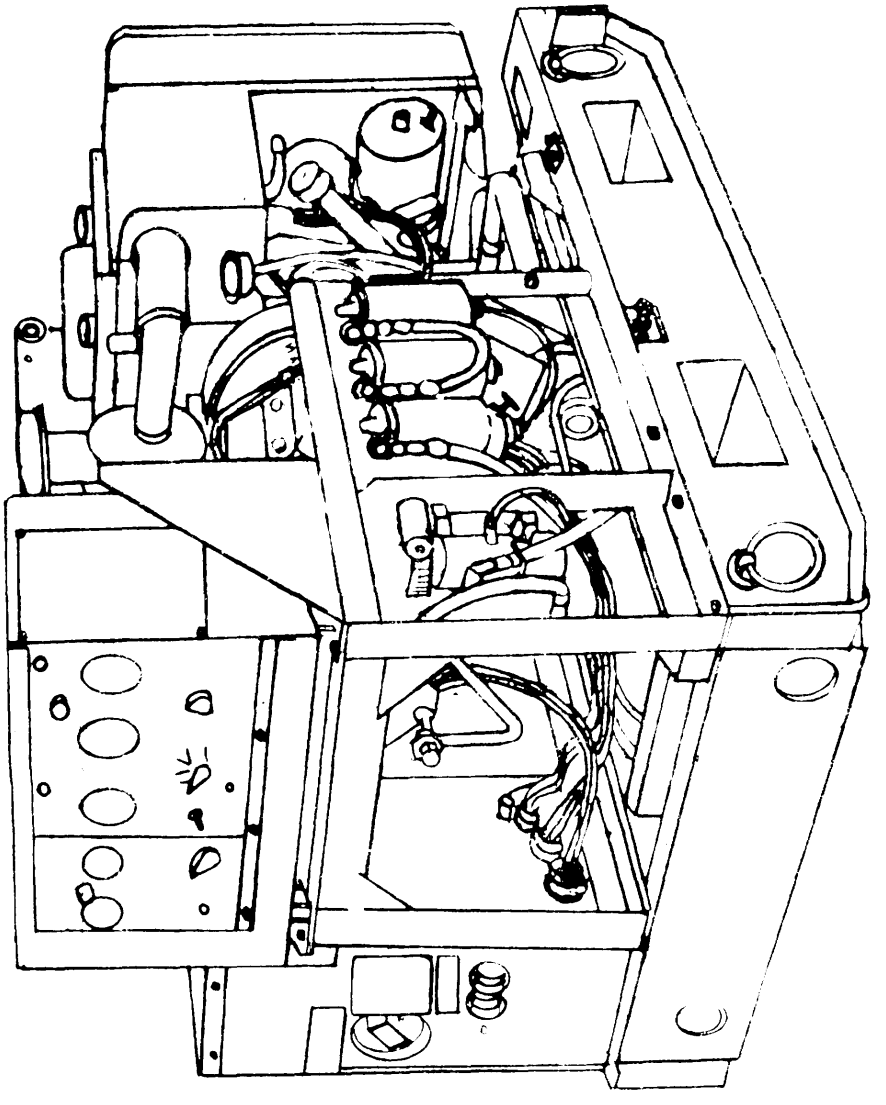

FIGURE 10. MEP-002A (5.0 KW, 60 Hz DED).

X-3518

Source: https://assist.dla.mil -- Downloaded: 2016-12-11T08:39Z
Check the source to verify that this is the current version before use.

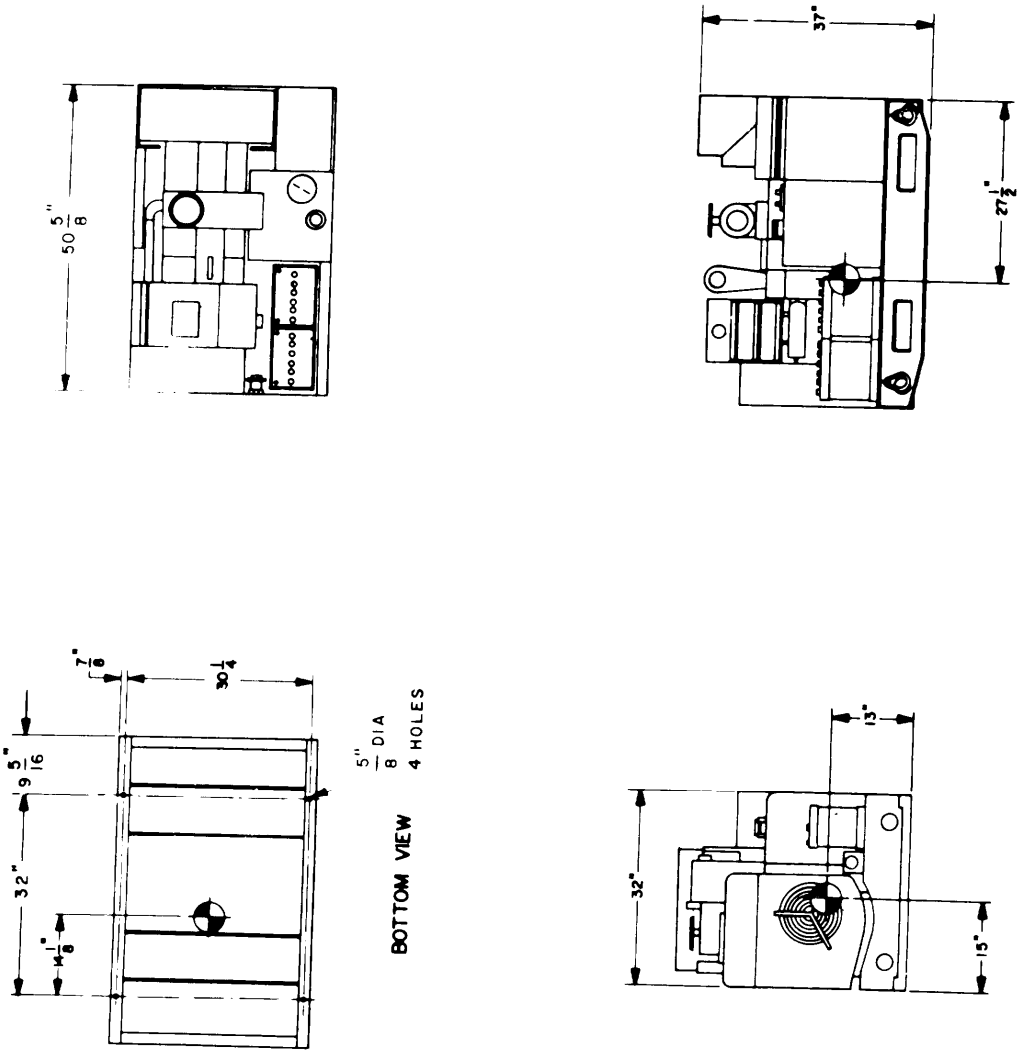

FIGURE 11. MEP-002A (5.0 kw, 60 Hz, DED).

X-3546

Source: https://assist.dla.mil -- Downloaded: 2016-12-11T08:39Z
Check the source to verify that this is the current version before use.

MILITARY STANDARD
MOBILE ELECTRIC POWER
ENGINE GENERATOR STANDARD FAMILY
MEP-022A, 5 kW, 400 Hz, GASOLINE ENGINE-DRIVEN GENERATOR SET
CHARACTERISTICS DATA SHEET

CLASSIFICATION

Description: 5 kW @ 0.8 power factor, 400 Hz, 120 v, 240 v, 120/208 V

Model:	MEP-022A	Type:	I (tactical)
NSN:	6115-00-017-8241	Class:	2 (utility)
Spec:	MIL-G-52732/10	Mode:	II (400 Hz)

PHYSICAL CHARACTERISTICS

Dimensions: See Figure 12 on pages 63.

weight: 479 lbs (217.3 kg).

Mobility: Mounted on skid base (tubular frame). Lifting and tie-down attachment provided.

Engine: Gasoline. Standard: MS39300. Horsepower: 10 @ 3428 RPM. No. of cyl: 2. Cycle: 4. Air cooled. Rope and 24 VDC electric start. Operating speed: 3428 RPM. Fuel tank capacity: 5 gallon (approx 3.5 hrs at rated load). Fuel pump lift: 6 feet.

Fuel:
Primary: MIL-G-3056 and VV-G-76 Automotive gasolines.
Emergency fuel: MIL-G-5572, Grades 80/87, 100/130 and 115/145 Aviation gasolines

Electrical:
Drip proof generator enclosure. Fungus and moisture treatment.
Solid state voltage regulator. Burshless rotary exciter.

Voltage Connection: 120 v, 2 wire, 1 phase. 240 V, 2 wire, 1 phase.
120 V, 3 wire, 3 phase. 120/208 V, 4 wire, 3 phase.

Source: https://assist.dla.mil -- Downloaded: 2016-12-11T08:39Z
Check the source to verify that this is the current version before use.

Protective Devices: Short circuit protection. Low oil pressure cut-off.

Instrumentation: Voltmeter. Frequency meter. Percent-of load meter (current). Hourmeter. Oil pressure gage. Battery charging ammeter.

FUNCTIONAL/OPERATIONAL CHARACTERISTICS

Reliability: Mean Time Between Failures (MTBF): 250 hours (specified)

Fuel Consumption: 1.4 gph at rated load.

Electromagnetic Interference: Suppressed to MIL-STD-461 limits.

	Voltage	Frequency
Steady State Stability (variation)		
Short Term (30 see)	2% Bandwidth	1% Bandwidth
Long Term (4 hours)	2% Bandwidth	2% Bandwidth
Transient Performance		
Application of rated load	30% Dip	3% Undershoot
recovery	2 Sec	4 Sec
Rejection of rated load	30% Rise	5% Overshoot
recovery	2 Sec	6 Sec
Waveform		
Maximum Deviation Factor (single phase)	6%	
(three phase)	5%	
Individual Harmonic (single phase)	3%	
(three phase)	3%	
Regulation:	4%	3%
240 V, 2 wire connection	5%	3%

Adjustment Range for Standard Voltage Connections

120/208 v Corm: 197 to 218 v. 240 V Corm: 228 to 252 V.
120 V, 1 phase Conn: 114 to 126 v. 120 V, 3 phase Corm: 114 to 126 V.

Frequency Adjustment Range: 400 Hz: N/A

ENVIRONMENTAL DATA

Power Output at Environmental Conditions

5 kW, 400 Hz, Sea Level: Minus 25° F (-31.7° C) to plus 125° F (+51.7° C)
5 kW, 400 Hz, 5000 feet: Minus 25° F (-31.7°C) to plus 107° F (+41.7° C)
5 kW, 400 HZ, 8000 feet: Minus 25° F (-31.7° C) to plus 95° F (+35.0° C)
Winterization system extends lower ambient temperature limit to -65° F (-53.9° C).

Source: https://assist.dla.mil -- Downloaded: 2016-12-11T08:39Z
Check the source to verify that this is the current version before use.

Shock and Rough Handling: 10 mph railroad impact. 3 foot drop. Vibration.

Attitude: Operate with base level or inclined no more than 15 degrees from level.

Noise Level: 82 dbA @ 25 feet.

OPTIONAL EQUIPMENT

See 4.4.1 of MIL-STD-633 for additional information on optional equipment.

Description	NSN	Weight lbs (kg)	Effect on Dim
Spark Arrester Kit	2990-01-032-0757		None
Winterization Kit			
Canvas Cover	6115-00-945-7545	8 (3.6)	Negligible
Torch	4520-00-710-4341		Negligible

REFERENCE DOCUMENTS

Technical Manuals:

Army	Air Force	Marine Corps	Navy
TM	TO		NAVFAC
5-6115-332-14	35C2-3-424-1		P-8-614-14
5-6115-332-24P	35C2-3-424-24		
5-2805-258-14	38G2-89-21	TM-03523B-14	
5-2805-258-24P	38G2-89-34	SL-4-035-23B	

Source: https://assist.dla.mil -- Downloaded: 2016-12-11T08:39Z
Check the source to verify that this is the current version before use.

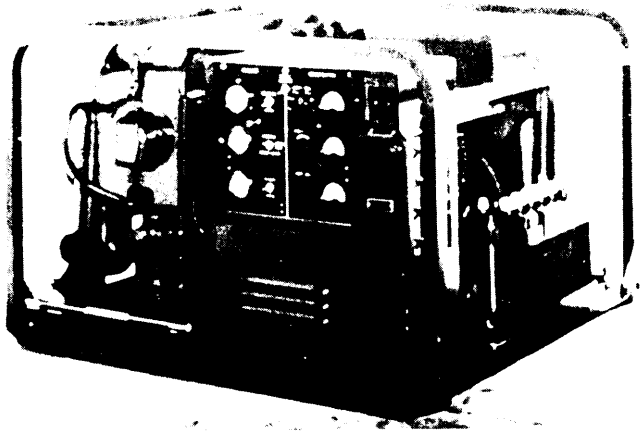

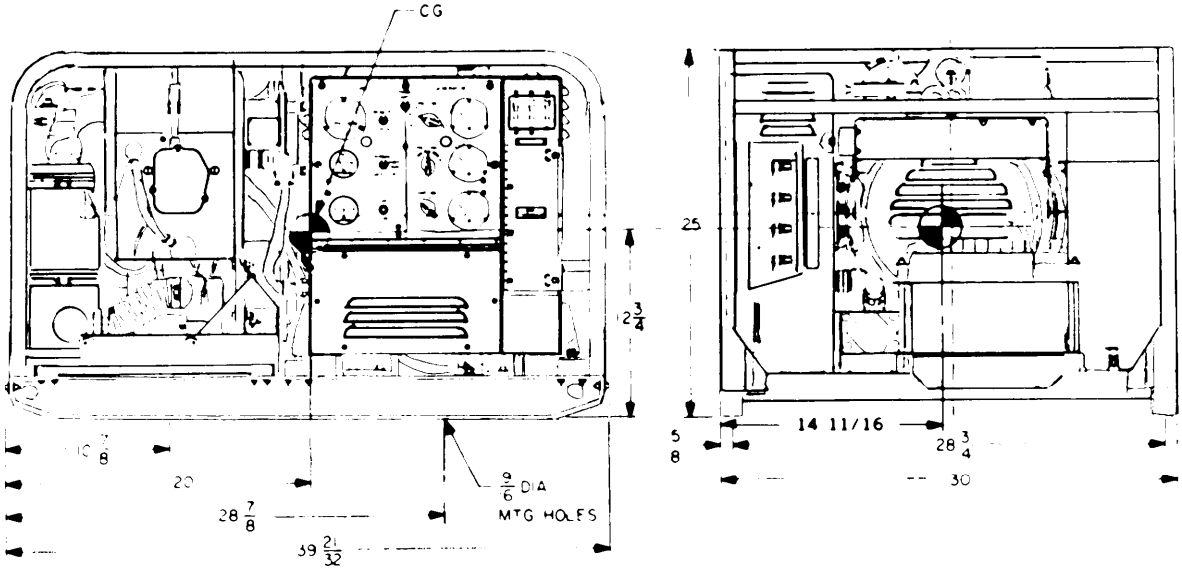

NOTE: ALL DIMENSIONS ARE IN INCHES.

FIGURE 12. MEP-022A (5.0 kw, 400 Hz, GED).

Source: https://assist.dla.mil -- Downloaded: 2016-12-11T08:39Z
Check the source to verify that this is the current version before use.

MILITARY STANDARD
MOBILE ELECTRIC POWER
ENGINE GENERATOR STANDARD FAMILY
MEP-018A, 10 kW, 60 Hz, GASOLINE ENGINE-DRIVEN GENERATOR SET
CHARACTERISTICS DATA SHEET

CLASSIFICATION

Description: 10 kW @ 0.8 power factor, 60 Hz, 120 V, 240 V, 120/208 V

Model:	MEP-018A	Type:	I (tactical)
NSN:	6115-00-889-1447	Class:	2 (utility)
Spec:	MIL-G-52732/11	Mode:	III (60 HZ)

PHYSICAL CHARACTERISTICS

Dimensions: See Figure 13 on pages 67.

Weight: 850 lbs (385.6 kg).

Mobility: Mounted on skid base (tubular frame). Lifting and tie-down attachments provided.

Engine: Gasoline. Standard: MS39302. Horsepower: 20 @ 3600 RPM. No. of cyl: 4. Cycle: 4. Air cooled. Rope and 24 VDC electric start. Operating speed: 3600 RPM. Fuel tank capacity: 5 gallon (approx 2 hrs at rated load). Fuel pump lift: 6 feet.

Fuel:
- Primary: MIL-G-3056 and VV-G-76 Automotive gasolines.
- Emergency fuel: MIL-G-5572, Grades 80/87, 100/130 and 115/145 Aviation gasolines.

Electrical:
- Drip proof generator enclosure. Fungus and moisture treatment.
- Solid state voltage regulator. Brushless rotary exciter.

Voltage Connection: 120 v, 2 wire, 1 phase. 120/240 V, 3 wire, 1 phase
120 V, 3 wire, 3 phase. 120/208 V, 4 wire, 3 phase.

Source: https://assist.dla.mil -- Downloaded: 2016-12-11T08:39Z
Check the source to verify that this is the current version before use.

Protective Devices: Short circuit protection. Low oil pressure cut-off switch.

Instrumentation: Voltmeter. Frequency meter. Percent-of-load meter (current). Hourmeter, Oil pressure gage. Battery charging ammeter.

FUNCTIONAL/OPERATIONAL CHARACTERISTICS

Reliability: Mean Time Between Failure (MTBF): 250 hours (specified)

Fuel Consumption: 2.4 gph at rated load.

Electromagnetic Interference: Suppressed to MIL-STD-461 limits.

	Voltage	Frequency
Steady State Stability (variation)		
Short Term (30 see)	1% Bandwidth	1% Bandwidth
Long Term (4 hours)	1% Bandwidth	2% Bandwidth
Transient Performance		
Application of rated load	20% Dip	3% Undershoot
recovery	2 Sec	4 Sec
Rejection of rated load	20% Rise	5% Overshoot
recovery	2 Sec	6 Sec
Application of simulated motor load	40% Dip	
recovery	4 Sec	
Waveform		
Maximum Deviation Factor (single phase)	6%	
(three phase)	5%	
Individual Harmonic (single phase)	2%	
(three phase)	2%	
Regulation:	3%	
120/240 V, 3 wire connection	4%	3%
		3%

Adjustment Range for Standard Voltage Connections
120/208 v Corm: 197 to 218 V. 120/240 V Corm: 228 to 252 V.
120 V, 1 phase Corm: 114 to 126 v. 120 V, 3 phase Corm: 114 to 126 V.

Frequency Adjustment Range: 60 Hz: N/A

ENVIRONMENTAL DATA

Power Output at Environmental Conditions
10 kW, 60 Hz, Sea Level: Minus 25° F (-31.7° C) to PIUS 125° F (+51.7° C)
10 kW, 60 Hz, 5000 feet: Minus 25° F (-31.7° C) to plus 107° F (+41.7° C)
10 kW, 60 Hz, 8000 feet: Minus 25° F (-31.7° C) to plus 95° F (+35.0° C)
Winterization system extends lower ambient temperature limit to -65° F (-53.9° C).

Source: https://assist.dla.mil -- Downloaded: 2016-12-11T08:39Z
Check the source to verify that this is the current version before use.

Shock and Rough Handling: 10 mph railroad impact. 3 foot drop. Vibration.

Attitude: Operate with base level or inclined no more than 15 degrees from level..

Noise Level: 82 dbA @ 25 feet.

OPTIONAL EQUIPMENT

See 4.4.1 of MIL-STD-633 for additional information on optional equipment.

Description	NSN	Weight lbs (kg)	Effect on Dim
Spark Arrester Kit	2990-01-032-3750		None
Winterization Kit			
Canvas Cover	6115-00-066-4933	10 (4.5)	Negligible
Torch	4520-00-710-4341		Negligible

REFERENCE DOCUMENTS

Technical Manuals:

Army	Air Force	Marine Corps	Navy
TM	TO		NAVFAC
5-6115-275-14	35C2-3-452-1		P-8-615-14
5-6115-275-24P	35C2-3-452-4		P-8-515-24P
5-2805-259-14	38G2-89-41	TM-03524B-14	
5-2805-259-24P	38G2-89-54	SL-4-035-24B	

Source: https://assist.dla.mil -- Downloaded: 2016-12-11T08:39Z
Check the source to verify that this is the current version before use.

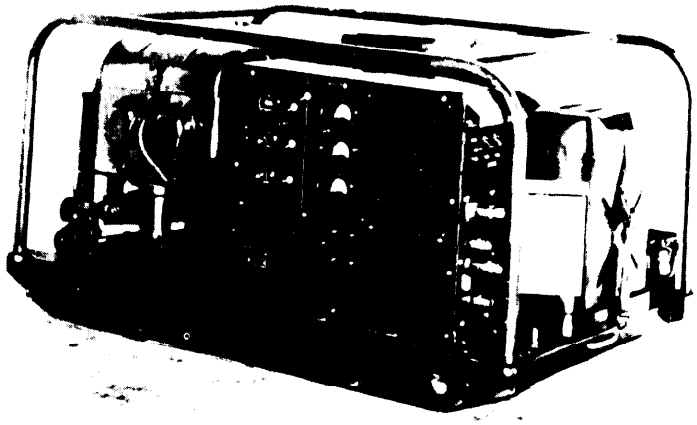

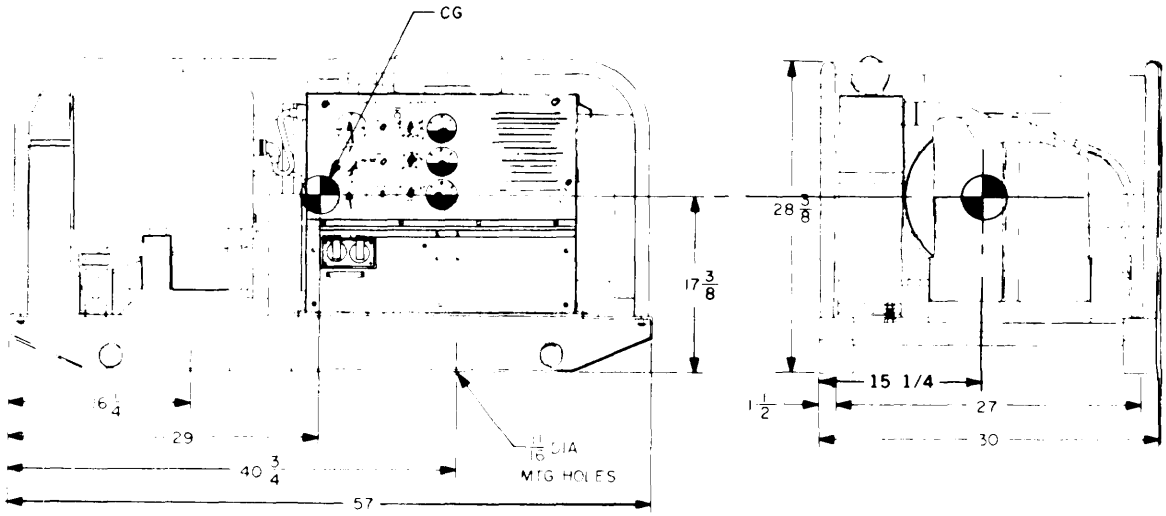

NOTE: ALL DIMENSIONS ARE IN INCHES

FIGURE 13. MEP-018A (10 kw, 60 Hz, GED.

X-3548

Source: https://assist.dla.mil -- Downloaded: 2016-12-11T08:39Z
Check the source to verify that this is the current version before use.

MILITARY STANDARD
MOBILE ELECTRIC POWER
ENGINE GENERATOR STANDARD FAMILY
MEP-003A, 10 kW, 60 Hz, DIESEL ENGINE-DRIVEN GENERATOR SET
CHARACTERISTICS DATA SHEET

CLASSIFICATION

Description: 10 kW @ 0.8 power factor, 60 Hz, 120 V, 240 V, 120/208 V

Model:	MEP-003A	Type:	I (tactical)
NSN:	6115-00-465-1030	Class:	2 (utility)
Spec:	MIL-G-52889/2	Mode:	III (60 Hz)

PHYSICAL CHARACTERISTICS

Dimensions: See Figures 14 and 15 on pages 71 and 72.

Weight: 1240 lbs (562.5 kg).

Mobility: Mounted on skid base. Lifting, towing and tie-down attachments provided. Fork lift provision.

Engine: Diesel. Std: MIL-STD-1410. Horsepower: 20 @ 1800 RPM. No. of cyl: 4. Cycle: 4. Air cooled. 24 VDC electric start. Operating speed: 1800 RPM. Fuel tank capacity: 12.5 gallons (approx 8 hours at rated load). Fuel pump lift: 6 feet.

Fuel:
Primary: VV-F-800; Diesel Fuel Oil, types DF-1, DF-2 and DF-A.
Emergency fuel: MIL-T-5624, Aviation Turbine Fuels, grade JP-4

Electrical:
Drip proof generator enclosure. Fungus and moisture treatment.
Solid state voltage regulator. Brushless rotary exciter.

Voltage Connection: 120 V, 1 phase, 2 wire. 120/240 V, 1 phase, 3 wire, 120/208 V, 3 phase, 4 wire.

Source: https://assist.dla.mil -- Downloaded: 2016-12-11T08:39Z
Check the source to verify that this is the current version before use.

Protective Devices: Short circuit protection. Overload protection. Low oil pressure cut-off switch. High temperature cut-off switch.

Instrumentation: Voltmeter. Frequency meter. Ammeter. Hourmeter. Oil pressure gage. Battery charging ammeter.

FUNCTIONAL/OPERATIONAL CHARACTERISTICS

Reliability: Mean Time Between Failures (MTBF): 500 hours (specified)

Fuel Consumption: 1.09 gph at rated load.

Electromagnetic Interference: Suppressed to MIL-STD-461 limits.

	Voltage	Frequency
Steady State Stability (variation)		
Short Term (30 see)	2% Bandwidth	2% Bandwidth
Long Term (4 hours)	4% Bandwidth	3% Bandwidth
Transient Performance		
Application of rated load	20% Dip	3% Undershoot
recovery	3 Sec	3 Sec
Rejection of rated load	20% Rise	4% Overshoot
recovery	3 Sec	3 Sec
Application of simulated motor load	35% Dip	
recovery	5 Sec	
Waveform		
Maximum Deviation Factor (single phase)	6%	
(three phase)	5%	
Individual Harmonic (single phase)	3%	
(three phase)	2%	
Regulation:	3%	3%

Adjustment Range for Standard Voltage Connections
120/208 V Corm: 205 to 220 V. 120/240 V Corm: 228 to 252 V.
120 V, 1 phase Corm: 114 to 126 V.

Frequency Adjustment Range: 60 Hz: ±3%

Source: https://assist.dla.mil -- Downloaded: 2016-12-11T08:39Z
Check the source to verify that this is the current version before use.

ENVIRONMENTAL DATA

Power Output at Environmental Conditions
10 kW, 60 Hz, Sea Level: Minus 25° F (-31.7° C) to plus 125° F (+51.7° C)
10 kW, 60 Hz, 5000 feet: Minus 25° F (-31.7° C) to plus 107° F (+41.7° C)
9 kW, 60 Hz, 8000 feet: Minus 25° F (-31.7° C) to plUS 95° F (+35.0° C)
Winterization system extends lower temperature limit to -65° F (-53.9° C).

Shock and Rough Handling: 10 mph railroad impact. 12 inch drop. 12 inch end drop. Truck and trailer transportation.

Attitude: Operate with base level or inclined no more than 15 degrees from level.

Noise Level: 77 dbA @ 25 feet.

OPTIONAL EQUIPMENT

See 4.4.2 of MIL-STD-633 for additional information on optional equipment.

Description	NSN	Weight lbs (kg)	Effect on Dim
Winterization Kits			
Aux, Fuel Burning	To be determined	350 (158.8) Max	Aux: (41X40X26)
Slave Receptacle Assembly (MS3506)	5935-00-549-4690		Int
Slave Receptacle Assembly (MS75058)	5935-00-295-6403		Int

REFERENCE DOCUMENTS

Technical Manuals:

Army	Air Force	Marine Corps	Navy
TM	TO		NAVFAC
5-6115-585-12	35C2-3-455-1	TM-05684C-12	P-8-623-12
5-6115-585-34	35C2-3-455-2	TM-05684C-34	P-8-623-34
5-6115-585-24P	35C2-3-455-4	SL-4-05684C	P-8-623-24P

Source: https://assist.dla.mil -- Downloaded: 2016-12-11T08:39Z
Check the source to verify that this is the current version before use.

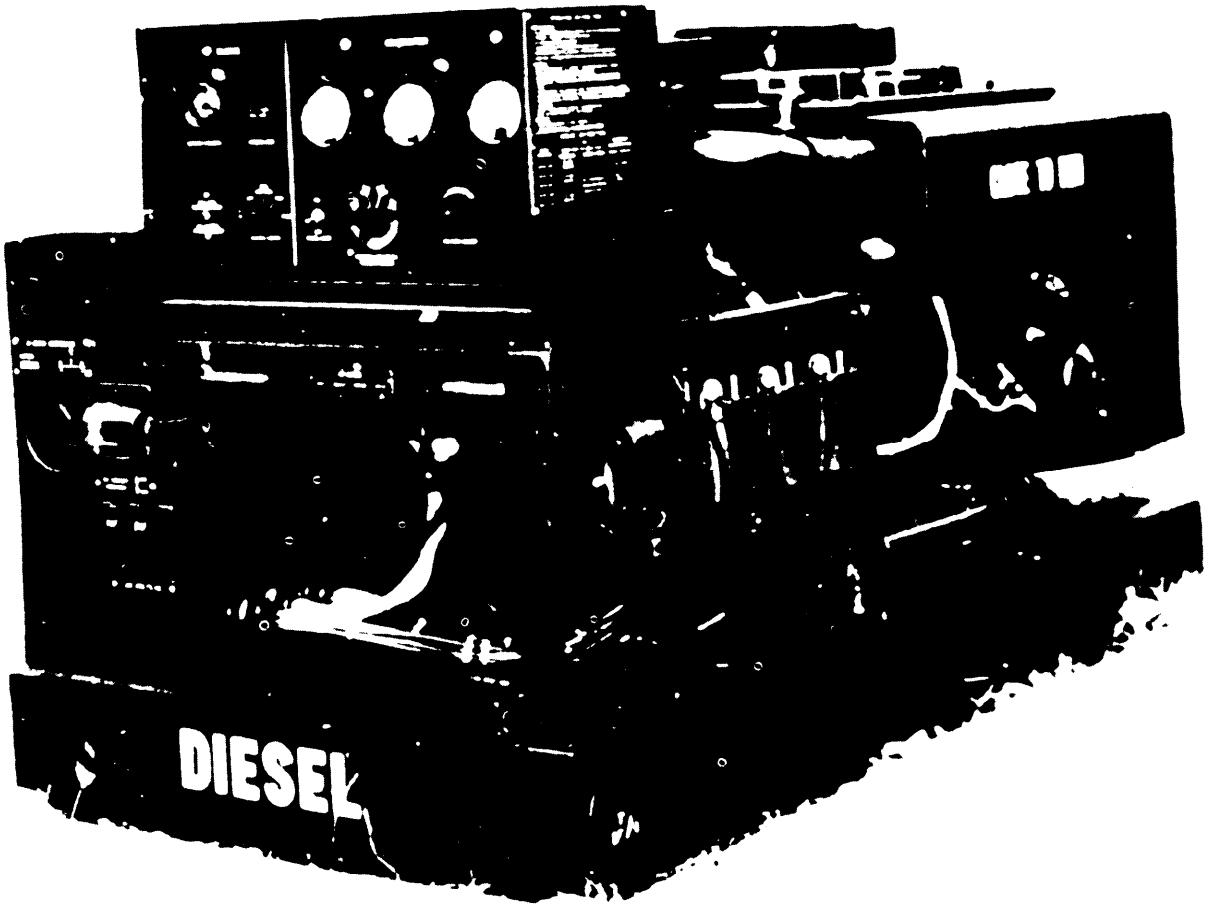

FIGURE 14. MEP-003A (10 kW, 60 Hz, DED).

X-3549

Source: https://assist.dla.mil -- Downloaded: 2016-12-11T08:39Z
Check the source to verify that this is the current version before use.

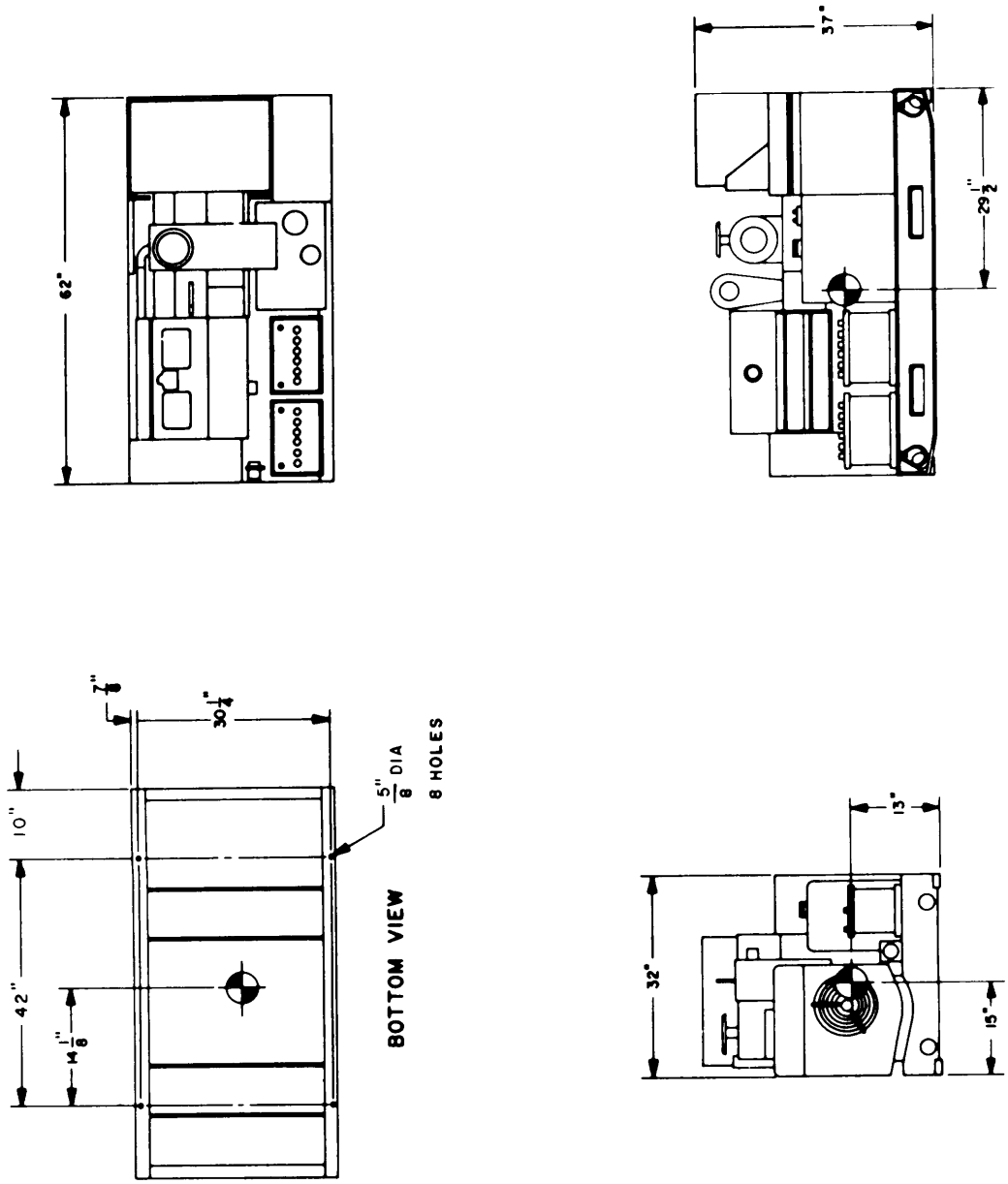

FIGURE 15. MEP-003A (10 kw, 60 Hz, DED).

X-3550

Source: https://assist.dla.mil -- Downloaded: 2016-12-11T08:39Z
Check the source to verify that this is the current version before use.

MILITARY STANDARD
MOBILE ELECTRIC POWER
ENGINE GENERATOR STANDARD FAMILY
MEP-412A, 10 kW, 60 Hz, GAS TURBINE ENGINE-DRIVEN GENERATOR SET
CHARACTERISTICS DATA SHEET

CLASSIFICATION

Description: 10 kW @ 0.8 power factor, 60 Hz, 120 V, 120/240 V, 120/208 v
Not type classified for Army use.

Model:	MEP-412A	Type:	I (tactical)
NSN:	To be determined	Class:	2 (utility)
Spec:	PD 10 Aug 78	Mode:	III (60 Hz)

PHYSICAL CHARACTERISTICS

Dimensions: See Figures 16 and 17 on pages 76 and 77.

Weight: 456 lbs (206.8 kg).

Mobility: Mounted on skid base. Lifting, and tie-down attachments provided. Towing provision.

Engine: Gas turbine. Horsepower: 28 @ 93,500 RPM. Air cooled. 24 VDC electric start. Operating speed: 93,500 RPM/with gear reduction to 3600. Internal fuel tank: 4 minutes operation. Fuel pump lift: 6 feet. Auxiliary fuel hose: 12 feet.

Fuel:
Primary: MIL-T-5624 Aviation Turbine Fuels, grades JP-4 and JP-5. VV-F-800, Diesel Fuel Oil, types DF-1, DF-2 and DF-A and MIL-F-16884, Marine Diesel Fuel Oil.
Emergency fuel: MIL-G-3056 and VV-G-76 Automotive Gasolines and MIL-G-5572 Aviation Gasolines. Grades 80/87, 100/130 and 115/145.

Electrical Data: Fungus and moisture treatment. Solid state voltage regulator. Brushless rotary exciter.

Voltage Connection: 120 V, 1 phase, 2 wire. 120/240 V, 1 phase 3 wire, 120/208 V, 3 phase 4 wire.

Source: https://assist.dla.mil -- Downloaded: 2016-12-11T08:39Z
Check the source to verify that this is the current version before use.

Protective Devices: Short circuit protection. Overload. Engine overspeed and exhaust temperature protection. Low oil pressure cut-off switch. Low fuel (4 minutes operation). Malfunction indicator for each protective device.

Instrumentation: Voltmeter. Ammeter. Hourmeter. Frequency Meter.

FUNCTIONAL/OPERATIONAL CHARACTERISTICS

Reliability: Mean Time Between Failures (MTBF): 750 hours (specified)

Fuel Consumption: 3.4 gph at rated load.

Electromagnetic Interference: Suppressed to MIL-STD-461 limits.

	Voltage	Frequency
Steady State Stability (variation)		
Short Term (30 see)	2% Bandwidth	2% Bandwidth
Long Term (4 hours)	4% Bandwidth	3% Bandwidth
Transient Performance		
Application of rated load	20$ Dip	3% Undershoot
recovery	3 Sec	3 Sec
Rejection of rated load	20% Rise	4% Overshoot
recovery	3 Sec	3 Sec
Waveform		
Maximum Deviation Factor	5%	
Individual Harmonic	2%	
Regulation:	3%	3%

Adjustment Range for Standard Voltage Connections: 205 to 220 V for 120/208 V connection. 114 to 126 V for 120 V connection. 228 to 252 v for 240 v connection.

Adjustment Range for Frequency: 58.2 to 61.8 Hz.

ENVIRONMENTAL DATA

Power Output at Environmental Conditions

10 kW, 60 Hz, Sea Level: Minus 65° F (-53.9° C) to plus 125° F (+51.7° C)
10 kW, 60 Hz, 5000 feet: Minus 65° F (-53.9° C) to plus 107° F (+41.7° C)
9 kW, 60 Hz, 8000 feet: Minus 65° F (-53.9° C) to plus 95° F (+35.0° C)

Shock and Rough Handling: 10 mph railroad impact. 12 inch drop. 12 inch end drop. Truck and trailer transportation.

Source: https://assist.dla.mil -- Downloaded: 2016-12-11T08:39Z
Check the source to verify that this is the current version before use.

Alttitude. Operate with base level or inclined no more than 15 degrees from level.

Noise Level: 79 dbA @ 25 feet.

OPTIONAL EQUIPMENT

None.

REFERENCE DOCUMENTS

Technical Manuals: Not published.

Source: https://assist.dla.mil -- Downloaded: 2016-12-11T08:39Z
Check the source to verify that this is the current version before use.

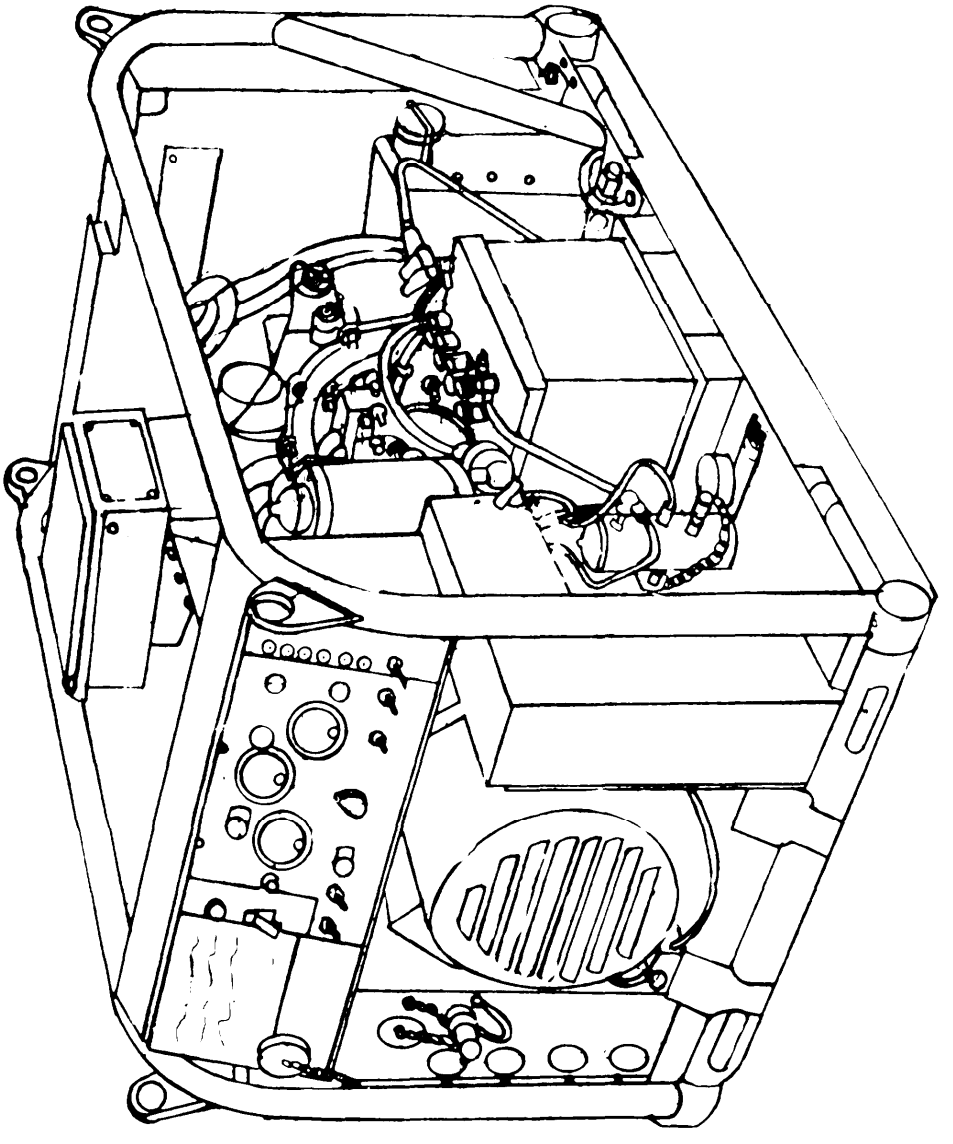

FIGURE 16. MEP-412 (10 KW, 60 Hz, GTED).

X-3517

Source: https://assist.dla.mil -- Downloaded: 2016-12-11T08:39Z
Check the source to verify that this is the current version before use.

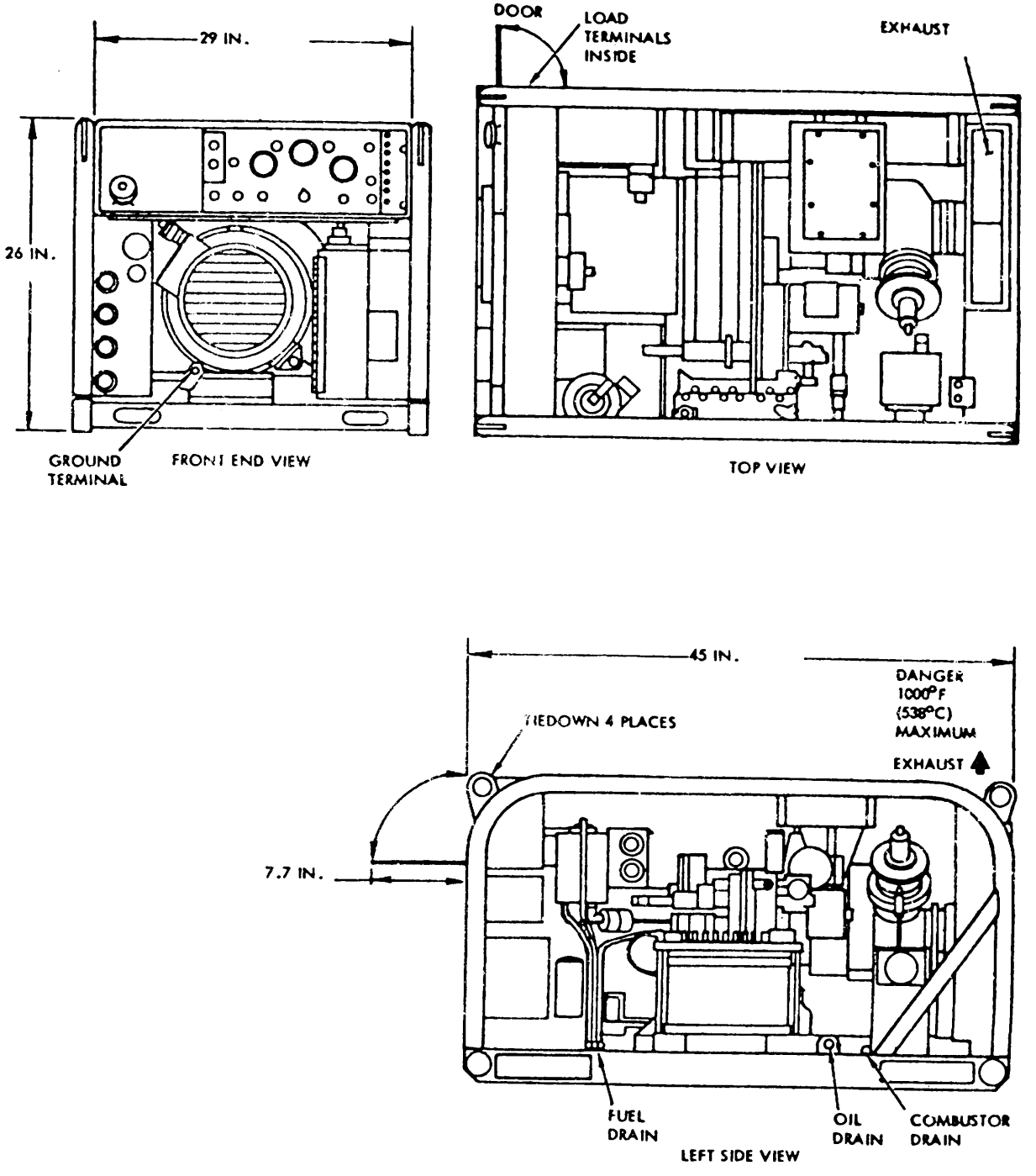

FIGURE 17. MEP-412 (10 kW, 60 Hz, GTED).

X-3551

Source: https://assist.dla.mil -- Downloaded: 2016-12-11T08:39Z
Check the source to verify that this is the current version before use.

MILITARY STANDARD
MOBILE ELECTRIC POWER
ENGINE GENERATOR STANDARD FAMILY
MEP-023A, 10 kW, 400 Hz, GASOLINE ENGINE-DRIVEN GENERATOR SET
CHARACTERISTICS DATA SHEET

CLASSIFICATION

Description: 10 kW @ 0.8 power factor, 400 Hz, 120 V, 240 V, 120/208 V

Model:	MEP-023A	Type:	I (tactical)
NSN:	6115-00-926-0843	Class:	2 (utility)
Spec:	MIL-G-52732/12	Mode:	II (400 Hz)

PHYSICAL CHARACTERISTICS

Dimensions: See Figure 18 on page 81.

Weight: 650 lbs (294.8 kg).

Mobility: Mounted on skid base (tubular frame). Lifting, and tie-down attachment provided.

Engine: Gasoline. Standard: MS39302. Horsepower: 20 @ 3428 RPM. No. of Cyl: 4. Cycle: 4. Air cooled. Rope and 24 VDC electric start. Operating speed: 3428 RPM. Fuel tank capacity: 5 gallons (approx 2 hrs at rated load). Fuel pump lift: 6 feet.

Fuel:
Primary: MIL-G-3056 and VV-G-76 Automotive gasolines.
Emergency fuel: MIL-G-5572, Grades 80/87, 100/130 and 115/145 Aviation gasolines.

Electrical:
Drip proof generator enclosure. Fungus and moisture treatment.
Solid state voltage regulator. Brushless rotary exciter.

Voltage Connection: 120 V, 2 wire, 1 phase. 120/240 V, 3 wire, 1 phase.
120 V, 3 wire, 3 phase. 120/208 V, 4 wire, 3 phase.

Source: https://assist.dla.mil -- Downloaded: 2016-12-11T08:39Z
Check the source to verify that this is the current version before use.

Protective Devices: Short circuit protection. Low oil pressure cut-off.

Instrumentation: Voltmeter. Frequency meter. Percent-of-load meter (current). Hourmeter. Oil pressure gage. Battery charging ammeter.

FUNCTIONAL/OPERATIONAL CHARACTERISTICS

Reliability: Mean Time Between Failures (MTBF): 250 hours (specified)

Fuel Consumption: 2.4 gph at rated load.

Electromagnetic lnterference: Suppressed to MIL-STD-461 limits.

	Voltage	Frequency
Steady State Stability (variation)		
Short Term (30 see)	1% Bandwidth	1% Bandwidth
Long Term (4 hours)	1% Bandwidth	2% Bandwidth
Transient Performance		
Application of rated load	20% Dip	3% Undershoot
recovery	2 Sec	4 Sec
Rejection of rated load	20% Rise	5% Overshoot
recovery	2 Sec	6 Sec
Application of simulated motor load	40% Dip	
recovery	4 Sec	
Maximum Deviation Factor (single phase)	6%	
(three phase)	5%	
Individual Harmonic (single phase)	2%	
(three phase)	2%	
Regulation:	3%	3%
120/240 V, 3 wire connection.	4%	3%

Adjustment Range for Standard Voltage Connections
120/208 v Corm: 197 to 218 v. 120/240 V Corm: 228 to 252 V.
120 V, 1 phase Corm: 114 to 126 V. 120 V, 3 phase Corm: 114 to 126 V.

Frequency Adjustment Range: 400 Hz: N/A

Source: https://assist.dla.mil -- Downloaded: 2016-12-11T08:39Z
Check the source to verify that this is the current version before use.

ENVIRONMENTAL DATA

Power Output at Environmental Conditions

10 kW, 400 Hz, Sea Level: Minus 25° F (-31.7° C) to plus 125° F (+51.7° C)
10 kW, 400 Hz, 5000 feet: Minus 25° F (-31.7° C) to plus 107° F (+41.7° C)
10 kW, 400 Hz, 8000 feet: Minus 25° F (-31.7° C) to plus 95° F (+35.0° C)
Winterization system extends lower ambient temperature limit to -65° F (-53.9° C)

Shock and Rough Handling: 10 mph railroad impact. 3 foot drop. Vibration.

Attitude: Operate with base level or inclined no more than 15 degrees from level.

Noise Level: 82 dbA @ 25 feet.

OPTIONAL EQUIPMENT

See 4.4.1 of MIL-STD-633 for additional information on optional equipment.

Description	NSN	Weight lbs (kg)	Effect on Dim
Spark Arrester Kit	2990-01-032-3750		None
Winterization Kit			
Canvas Cover	6115-00-066-4933	10 (4.5)	Negligible
Torch	4520-00-710-4341		Negligible

REFERENCE DOCUMENTS

Technical Manuals:

Army	Air Force	Marine Corps	Navy
TM	TO		NAVFAC
5-6115-275-14	35C2-3-452-1		P-8-615-14
5-6115-275-24P	35C2-3-452-4		P-8-615-24P
5-2805-259-14	38G2-89-41	TM-03524B-14	
5-2805-259-24P	38G2-89-54	SL-4-035-24B	

Source: https://assist.dla.mil -- Downloaded: 2016-12-11T08:39Z
Check the source to verify that this is the current version before use.

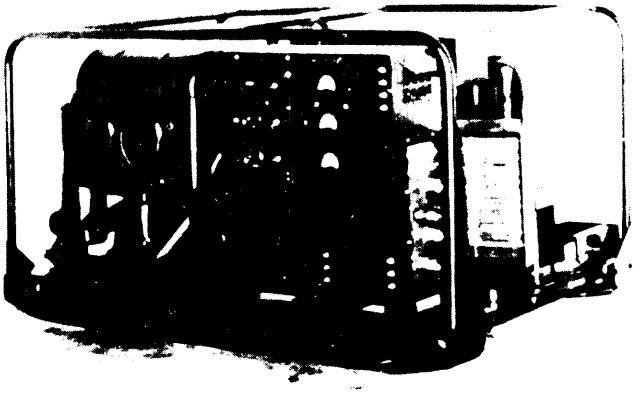

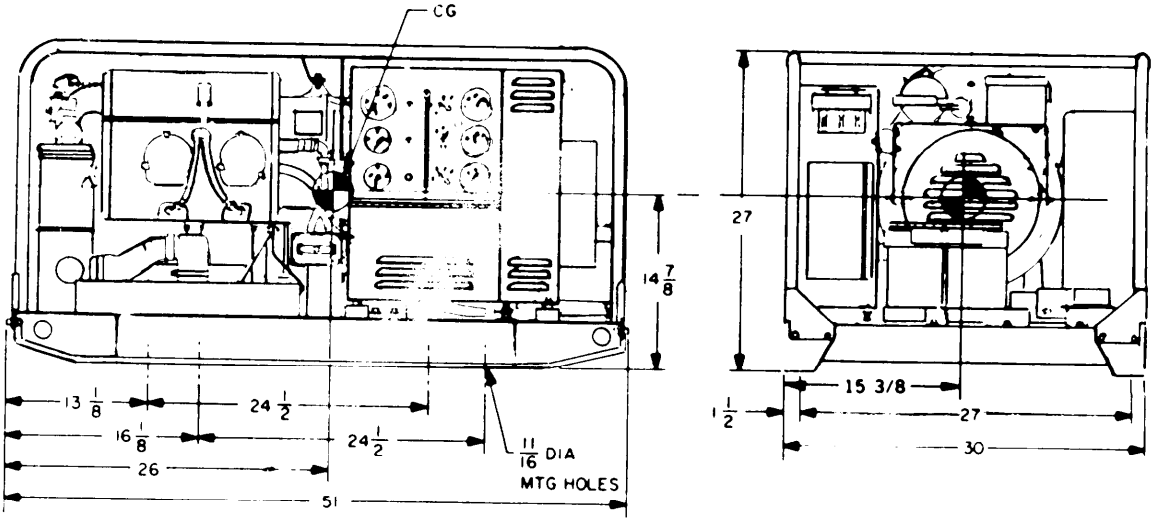

NOTE: ALL DIMENSIONS ARE IN INCHES.

FIGURE 18. MEP-023A (10 kW. 400 Hz. GED).

X-3552

Source: https://assist.dla.mil -- Downloaded: 2016-12-11T08:39Z
Check the source to verify that this is the current version before use.

MILITARY STANDARD
MOBILE ELECTRIC POWER
ENGINE GENERATOR STANDARD FAMILY
MEP-112A, 10 kW, 400 Hz, DIESEL ENGINE-DRIVEN GENERATOR SET
CHARACTERISTICS DATA SHEET

CLASSIFICATION

Description: 10 kW @ 0.8 power factor, 400 Hz, 120 V, 240 V, 120/208 V

Model:	MEP-112A	Type:	I (tactical)
NSN:	6115-00-465-1027	Class:	2 (utility)
Spec:	PD, 13 Jul 77	Mode:	II (400 Hz)

PHYSICAL CHARACTERISTICS

Dimensions: See Figures 19 and 20 on pages 85 and 86.

Weight: 1325 lbs (601 kg).

Mobility: Mounted on skid base. Lifting, towing and tie-down attachments provided. Fork lift provision.

Engine: Diesel. Std: MIL-STD-1410. Horsepower: 20 minimum @ 2000 RPM. No. of Cyl: 4. Cycle: 4. Air cooled. 24 VDC electric start. Operating speed: 2000 RPM. Fuel tank capacity: 12.5 gallons (approx 8 hours at rated load). Fuel pump lift: 6 feet.

Fuel:
Primary: VV-F-800; Diesel Fuel Oil, typed DF-1, DF-2 and DF-A.
Emergency fuel: MIL-T-5624, Aviation Turbine Fuels, grade JP-4.

Electrical:
Drip proof generator enclosure. Fungus and moisture treatment.
Solid state voltage regulator. Brushless rotary exciter.

Voltage Connection: 120 V, 1 phase, 2 wire. 120/240 V, 1 phase, 3 wire.
120/208 V, 3 phase, 4 wire.

Source: https://assist.dla.mil -- Downloaded: 2016-12-11T08:39Z
Check the source to verify that this is the current version before use.

Protective Devices: Short circuit protection. Overload protection. Low oil pressure cut-off switch. High temperature cut-off switch.

Instrumentation: Voltmeter. Frequency meter. Ammeter. Hourmeter. Oil pressure gage. Battery charging ammeter.

FUNCTIONAL/OPERATIONAL CHARACTERISTICS

Reliability: Mean Time Between Failures (MTBF): 500 hours (specified)

Fuel Consumption: 1.09 gph at rated load.

Electromagnetic Interference: Suppressed to MIL-STD-461 limits.

	Voltage	Frequency
Steady State Stability (variation)		
Short Term (30 see)	2% Bandwidth	2% Bandwidth
Long Term (4 hours)	4% Bandwidth	3% Bandwidth
Transient Performance		
Application of rated load	20% Dip	3% Undershoot
recovery	3 Sec	3 Sec
Rejection of rated load	20% Rise	4% Overshoot
recovery	3 Sec	3 Sec
Application of simulated motor load	35% Dip	
recovery	5 Sec	
Waveform		
Maximum Deviation Factor (single phase)	6%	
(three phase)	5%	
Individual Harmonic (single phase)	3%	
(three phase)	2%	
Regulation:	3%	3%

Adjustment Range for Standard Voltage Connections
120/208 v Corm: 205 to 220 V. 120/240 V Corm: 228 to 252 V.
120 V, 1 phase Corm: 114 to 126 V.

Frequency Adjustment Range: 400 Hz: ±5$

Source: https://assist.dla.mil -- Downloaded: 2016-12-11T08:39Z
Check the source to verify that this is the current version before use.

ENVIRONMENTAL DATA

Power Output at Environmental Conditions

10 kW, 400 Hz, Sea Level: Minus 25° F (-31.7° C) to plus 125° F (+51.7° C)
10 kW, 400 Hz, 5000 feet: Minus 25° F (-31.7° C) to plus 107° F (+41.7° C)
8 kW, 400 Hz, 8000 feet: Minus 25° F (-31.7° C) to plus 95° F (+53.9° C)
Winterization system extends lower temperature limit to -65° F (-53.9° C)

Shock and Rough Handling: 10 mph railroad impact. 12 inch drop. 12 inch end drop. Truck and trailer transportation.

Attitude: Operate with base level or inclined no more than 15 degrees from level.

Noise Level: 77 dbA @ 25 feet (estimated).

OPTIONAL EQUIPMENT

See 4.4.2 of MIL-STD-633 for additional information on optional equipment

Description	NSN	Weight lbs (kg)	Effect on Dim (ins)
Winterization Kit Aux, Fuel Burning	To be determined	350 (158.8) max	Aux: (41x40x26)
Slave Receptacle Assembly (MS3506)	5935-00-549-4690		Int
Slave Receptacle Assembly (MS75058)	5935-00-295-6403		Int

REFERENCE DOCUMENTS

Technical Manuals:

Army	Air Force	Marine Corps	Navy
TM	TO		NAVFAC
5-6115-585-12	35C2-3-455-1	TM-05684C-12	P-8-623-12
5-6115-585-34	35C2-3-455-2	TM-05684C-34	P-8-623-34
5-6115-585-24P	35C2-3-455-4	SL-4-05684C	P-8-623-24P

Source: https://assist.dla.mil -- Downloaded: 2016-12-11T08:39Z
Check the source to verify that this is the current version before use.

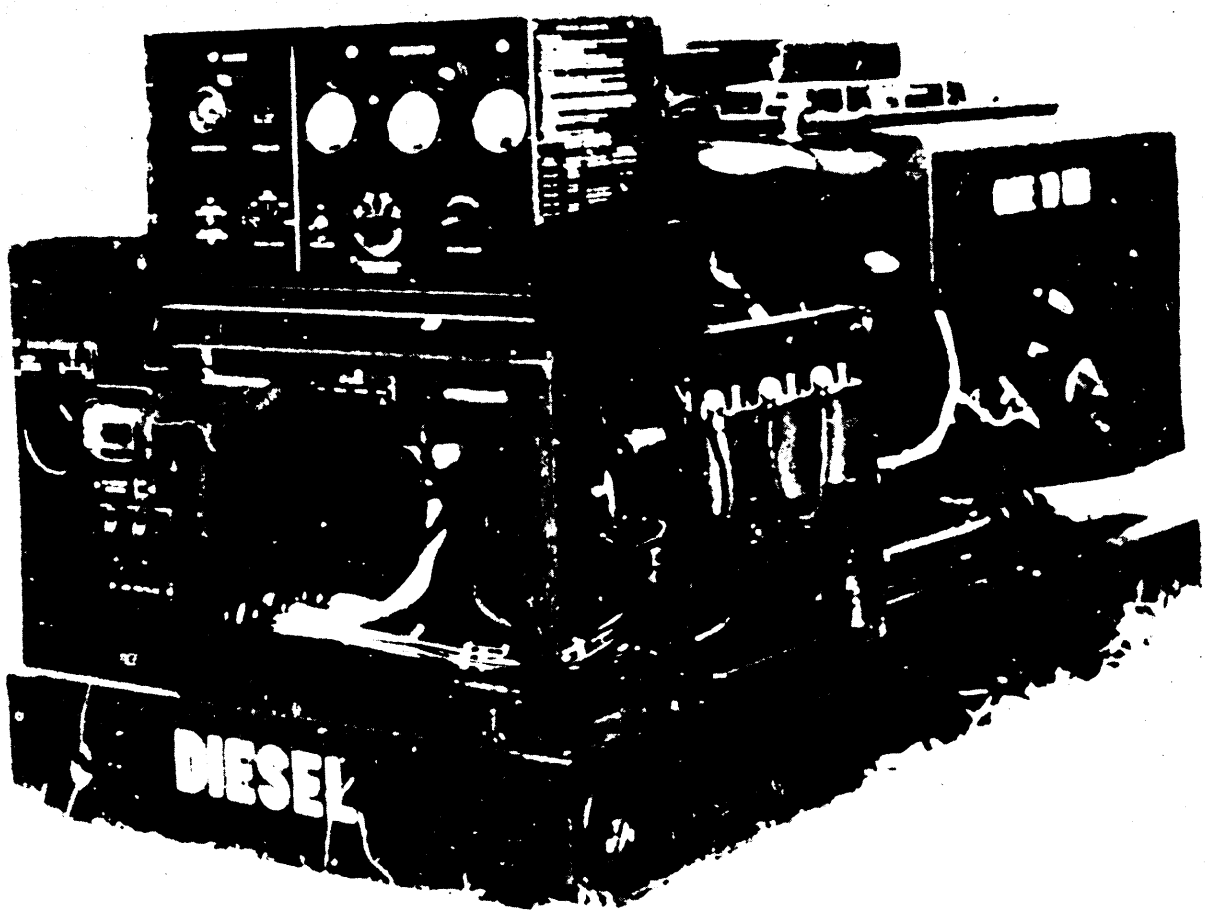

FIGURE 19. MEP-112A (10 kW, 400 Hz, DED).

X-3553

Source: https://assist.dla.mil -- Downloaded: 2016-12-11T08:39Z
Check the source to verify that this is the current version before use.

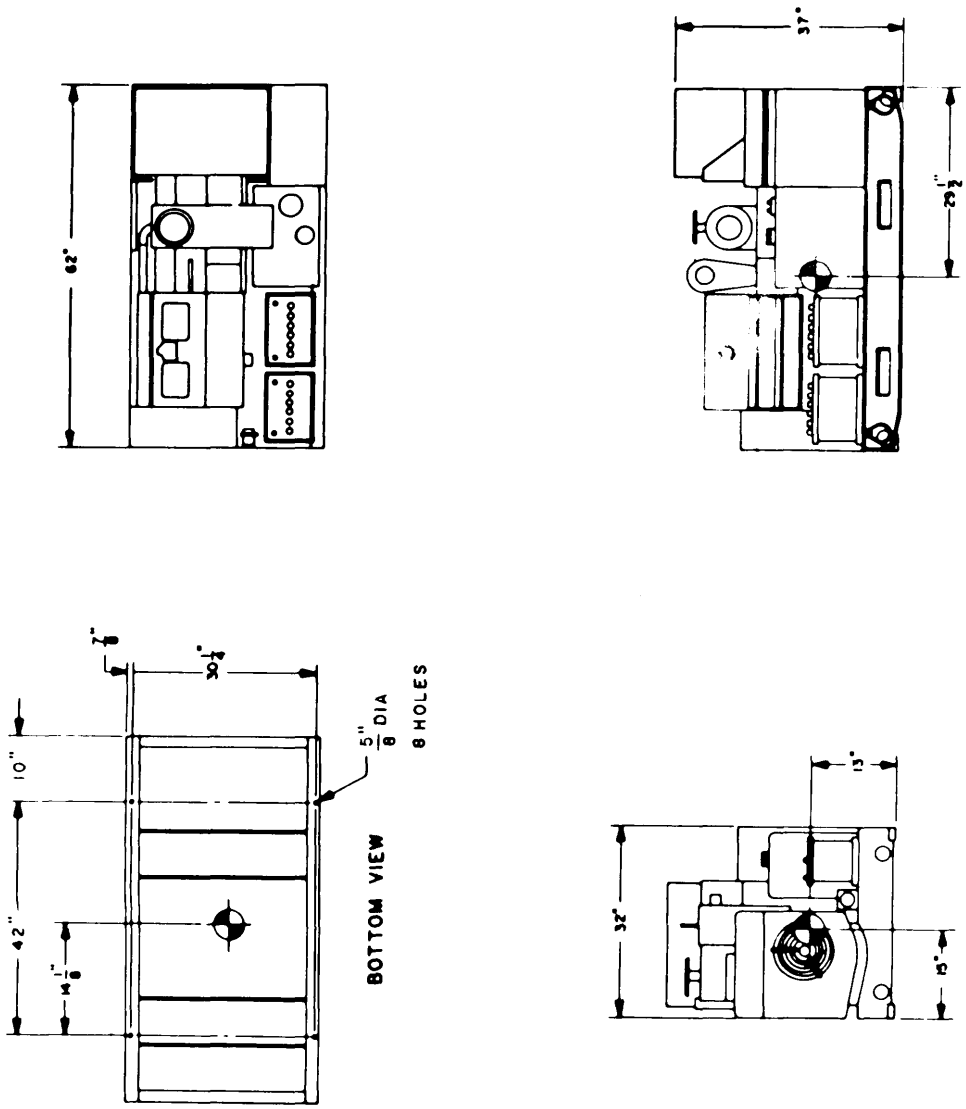

FIGURE 20. MEP-112A (10 kW, 400 Hz, DED).

X-3554

Source: https://assist.dla.mil -- Downloaded: 2016-12-11T08:39Z
Check the source to verify that this is the current version before use.

MILITARY STANDARD
MOBILE ELECTRIC POWER
ENGINE GENERATOR STANDARD FAMILY
MEP-414A, 10 kW, DC GAS TURBINE ENGINE-DRIVEN GENERATOR SET
CHARACTERISTICS DATA SHEET

CLASSIFICATION

Description: 10 kW, 28 VDC
Not type classified for Army use.

Model:	MEP-414A	Type:	I (tactical)
NSN:	6115-00-149-0761	Class:	2 (utility)
Spec:	PD 20 Mar 74	Mode:	IV (DC)

PHYSICAL CHARACTERISTICS

Dimensions: See Figures 21 and 22 on pages 91 and 92.

Weight: 300 lbs (136.1 kg).

Mobility: Mounted on skid base. Lifting and tie-down attachments provided.

Engine: Gas turbine. Horsepower: 28 @ 93,500 RPM. Air cooled. 24 VDC electric start. Operating speed: 93,500 RPM. Internal fuel tank: 3 minutes operation. Fuel pump lift: 6 feet. Auxiliary fuel hose: 12 feet.

Fuel:
Primary: MIL-T-5624 Aviation Turbine Fuels, grades JP-4 and JP-5. VV-F-800, Diesel Fuel Oil, types DF-1, DF-2 and DF-A and MIL-F-16884, Marine Diesel Fuel Oil.
Emergency Fuel: MIL-G-3056 and VV-G-76 Automotive Gasolines and MIL-G-5572 Aviation Gasolines. Grades 80/87, 100/130, and 115/145.

Electrical Data:
Generator: Solid rotor, 2 pole, Lundell (direct coupled to gas turbine).
Transformer: 15 kVA, 6 phase, 3 primary coil, 3 center-taped secondary coil, step-down. Rectifier Bridge: 6 phase, full wave, inter-phase transformer connected (180 degrees conduction angle). Battery: MS75047 (4 HN) (24 V lead-acid). Remote control capability. Solid state voltage regulator. Solid state protection and control circuits.

Voltage Connection: 28 Volts, direct current.

Source: https://assist.dla.mil -- Downloaded: 2016-12-11T08:39Z
Check the source to verify that this is the current version before use.

Protective Devices: Short circuit protection. Power limit protection (adjustable, 9 kW to 15 kW mode). Current limit protection (switchable, 750 or 1000 amp mode). Engine overspeed and exhaust temperature protection. Low oil pressure cut-off switch.

Instrumentation: Voltmeter. Ammeter. Hourmeter.

FUNCTIONAL/OPERATIONAL CHARACTERISTICS

Reliability: Mean Time Between Failures (MTBF): 500 hours (specified).

Fuel Consumption. 3.4 gph at rated load.

Electromagnetic Interference: Suppressed to MIL-STD-461 limits.

	Voltage
Steady State Stability (variation)	
Short Term (30 see)	2% Bandwidth
Long Term (4 hours)	2% Bandwidth
Transient Performance	
Application of rated load	30% Dip
recovery	2 Sec
Rejection of rated load	40% Rise
recovery	2 Sec
Regulation	3%
DC Voltage Ripple	595$

Adjustment Range for Standard Voltage Connections: 23 tO 35 v.

ENVIRONMENTAL DATA

Power Output at Environmental Conditions

10 kW, DC, Sea level: Minus 65° F (-52.9° C) to plus 125° F (+51.7° C)
10 kW, DC, 5000 feet: Minus 65° F (-53.9° C) to PIUS 107° F (+41.7° C)
9 kW, DC, 8000 feet: Minus 65° F (-53.9° C) to Plus 95° F (+35° C)

Shock and Rough Handling: 10 mph railroad impact. 12 inch drop. 6 inch end drop. Truck and trailer transportation.

Attitude: Operate with base level or inclined no more than 15 degrees from level.

Noise Level: 79 dbA @ 25 feet.

Source: https://assist.dla.mil -- Downloaded: 2016-12-11T08:39Z
Check the source to verify that this is the current version before use.

OPTIONAL EQUIPMENT

Description	NSN	Weight lbs (kg)	Effect on Dim (ins)
Remote Contol Box	6115-00-149-1021	3 (1.4)	Int

REFERENCE DOCUMENTS

Technical Manuals: Not published.

Source: https://assist.dla.mil -- Downloaded: 2016-12-11T08:39Z
Check the source to verify that this is the current version before use.

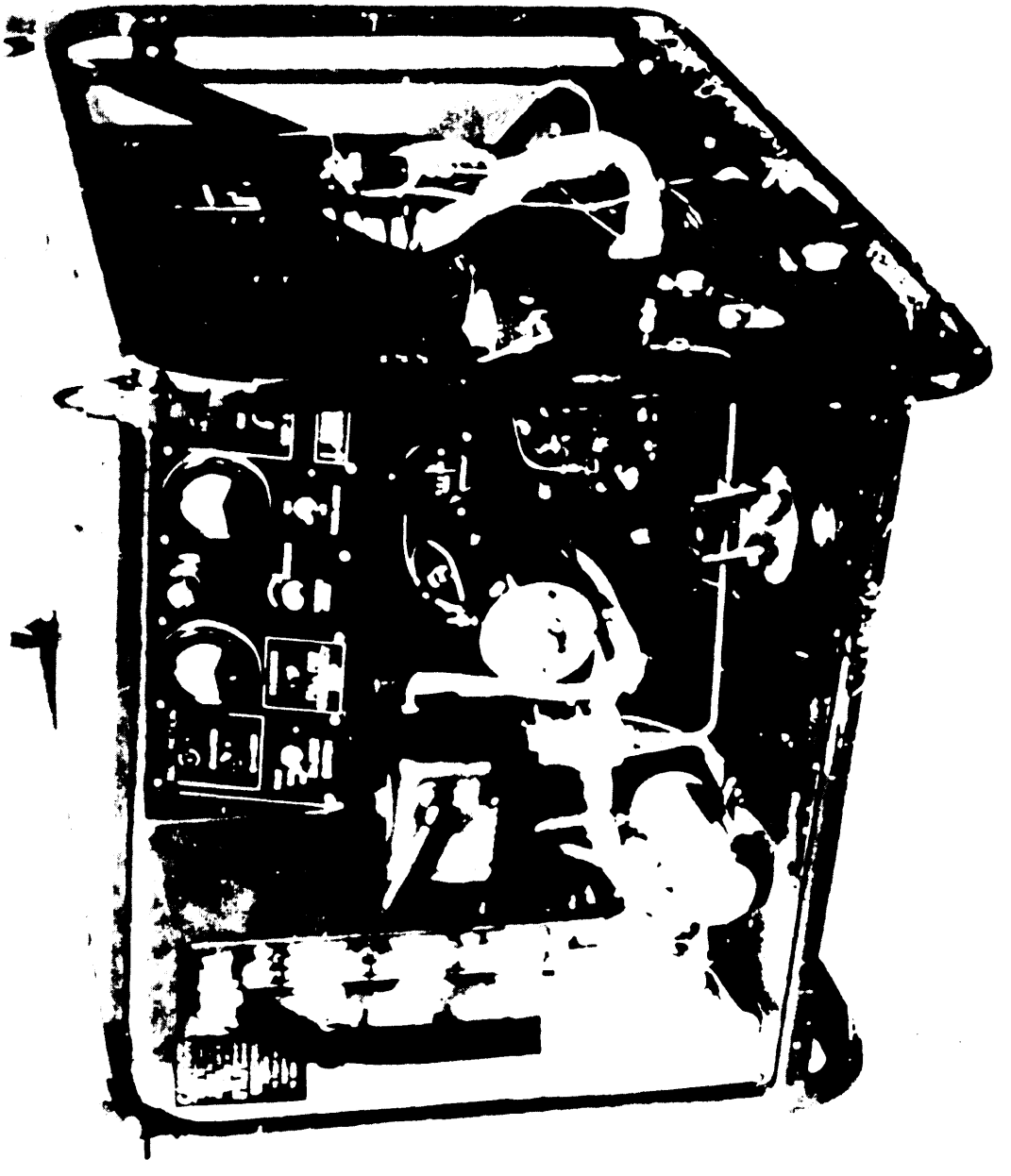

FIGURE 21. MEP-414A (10 kW, 28 Vdc, GTED).

X-3555

Source: https://assist.dla.mil -- Downloaded: 2016-12-11T08:39Z
Check the source to verify that this is the current version before use.

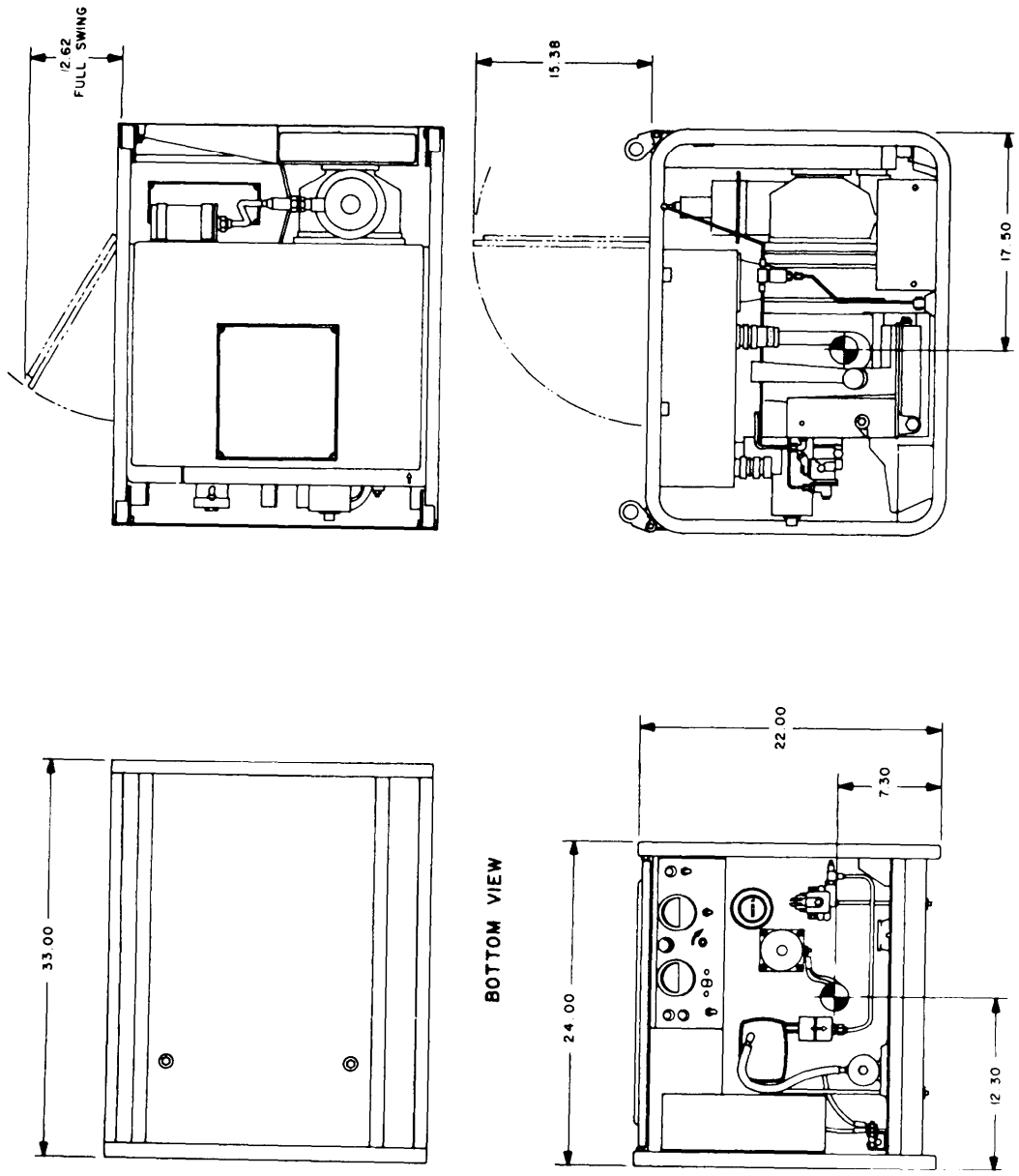

FIGURE 22. MEP-414A (10 kW, 28 Vdc, GTED).

X-3556

Source: https://assist.dla.mil -- Downloaded: 2016-12-11T08:39Z
Check the source to verify that this is the current version before use.

MILITARY STANDARD
MOBILE ELECTRIC POWER
ENGINE GENERATOR STANDARD FAMILY
MEP-004A, 15 kW, 50-60 Hz, DIESEL ENGINE-DRIVEN GENERATOR SET
CHARACTERISTICS DATA SHEET

CLASSIFICATION

Description: 15 kW @ 0.8 power factor, 50/60 Hz, 120/208 V, 240/416 V

Model:	MEP-004A	Type:	I (tactical)
NSN:	6115-00-118-1241	Class:	2 (utility)
Spec:	MIL-G-52884/2	Mode:	I (50/60 Hz)

PHYSICAL CHARACTERISTICS

Dimensions: See Figures 23 and 24 on pages 95 and 96.

Weight: 2450 lbs (1111.3 kg).

Mobility: Mounted on skid base. Lifting and tie-down attachments provided. Fork lift provision.

Engine: Diesel Std: MlL-STD-1410. Horsepower: 41 @ 1800 RPM. No. of cyl: 4. Cycle: 4. Liquid cooled. 24 VDC electric start. Operating speed: 50 Hz: 1500 RPM, 60 Hz: 1800 RPM. Fuel tank capacity: 15 gallons (approx 8 hours at rated load). Fuel pump lift: 12 feet.

Fuel:
Primary: VV-F-800; Diesel Fuel Oil, types DF-1, DF-2 and DF-A.
Emergency Fuel: MIL-T-5624, Aviation Turbine Fuels, grades JP-4 and JP-5.

Electrical:
Drip proof generator enclosure. Capable of parallel operation, Fungus and moisture treatment. Solid state voltage regulator. Brushless rotary exciter.

Voltage Connection: 60 Hz: 120/208 V, 3 phase, 4 wire, 240/416 V, 3 phase, 4 wire, 50 Hz: 120/208 V, 3 phase, 4 wire. 240/416 V, 3 phase, 4 wire.

Source: https://assist.dla.mil -- Downloaded: 2016-12-11T08:39Z
Check the source to verify that this is the current version before use.

Protective Devices: Short circuit protection. Overvoltage protection. Overload protection. Reverse power protection. Low oil pressure cut-off switch. High temperature cut-off switch. Low fuel level cut-off switch. Overspeed cut-off switch.

Instrumentation. Voltmeter. Frequency meter. Ammeter. Hourmeter. Wattmeter (% load). Oil pressure gage. Battery charging ammeter (% current). Fault indicating system. Temperature indicator. Fuel level.

FUNCTIONAL/OPERATIOINAL CHARACTERISTICS

Reliability: Mean Time Between Failures (MTBF); 670 hours (specified).

Fuel Consumption: 1.5 gph at rated load.

Electromagnetic Interference. Suppression to MIL-STD-461 limits.

	Voltage	Frequency
Steady State Stability (variation)		
Short Term (30 see)	2% Bandwidth	2% Bandwidth
Long Term (4 hours)	4% Bandwidth	3% Bandwidth
Transient Performance:		
Application of rated load	20% Dip	3% Undershoot
recovery	3 Sec	3 Sec
Rejection of rated load	20% Rise	4% Overshoot
recovery	3 Sec	3 Sec
Application of simulated motor load	40% Dip	
recovery	5 Sec	
Waveform		
Maximum Deviation Factor	5%	
Individual Harmonic	2%	
Regulation	3%	2-3% (Adjustable)

Adjustment Range for Standard Voltage Connections

120/208 V Corm: 60 Hz: 197 to 240 V. 50 Hz: 190 tO 213 V.
240/416 V Corm: 60 Hz: 395 to 480 V. 50 Hz: 380 to 426 V.

Frequency Adjustment Range: Low idle to 2250 ± 25 RPM.

Source: https://assist.dla.mil -- Downloaded: 2016-12-11T08:39Z
Check the source to verify that this is the current version before use.

ENVIRONMENTAL DATA

Power Output at Environmental Conditions

15 kW, 60 Hz, Sea level: Minus 25° F (-31.7° C) to plus 125° F (+51.7° C)
15 kW, 60 Hz, 5000 feet: Minus 25° F (-31.7° C) to plus 107° F (+41.7° C)
12.5 kW, 50 Hz, Sea level: Minus 25° F (-31.7° C) to plus 125° F (+51.7° C)
12.5 kW, 50 Hz, 5000 feet: Minus 25° F (-31.7° C) to plus 107° F (+41.7° C)
Winternization system extends lower temperature limit to minus 65° F (-53.9° C).

Shock and Rough Handling: 10 mph railroad impact. 12 inch end drop. Truck and trailer transportation.

Attitude: Operate with base level or inclined no more than 15 degrees from level.

Noise Level: 80 dbA @ 25 feet.

OPTIONAL EQUIPMENT

See 4.4.3 of MIL-STD-633 for additional information on optional equipment.

Description	NSN	Weight lbs (kg)	Effect on Dim (ins)
Wntzn Kit (Fuel burning)	6115-00-463-9083	45 (20.4)	Int
Wntzn Kit (Electrical)	6115-00-463-9085	40 (18.1)	Int
Wntzn Kit, Aux Fuel burning	6115-00-463-9098	350 (158.8)	AUX: (41x40x26)
Wntzn Kit, Aux, Elect.	6115-00-463-9099	260 (117.9)	Aux: (36x27x19)
Remote Control Box	6115-00-420-8490	8 (3.6)	Int
Load Bank	6115-00-291-9201	104 (47.2)	Ext: L+9
Wheel Mounting Kit	6115-00-463-9094	564 (255.8)	Ext: L+8, W+32, H+9
Panel, Auto, Load Transfer, 60 Hz	6115-00-471-7932	825 (374.2)	Aux (44x19x42)
Paralleling Cable	6140-00-197-4934	4 (1.8)	Ext: Negligible
Relay Assembly, Precise	6115-00-368-8202		Int
Spark Arrester Kit	2990-01-032-0756	7.5 (3.4)	Ext: L+12

REFERENCE DOCUMENTS

Technical Manuals:

Army	Air Force	Marine Corps	Navy
TM	TO		NAVFAC
5-6115-464-12	35C2-3-445-l	TM-07523A-12	P-8-624-12
5-6115-464-34	35C2-3-445-2	TM-07523A-34	P-8-624-34
5-6115-464-24P	35C2-3-445-4	SL-4-07523A	P-8-624-24P
LO			
5-6115-464-12		LO-07523A-12	

Source: https://assist.dla.mil -- Downloaded: 2016-12-11T08:39Z
Check the source to verify that this is the current version before use.

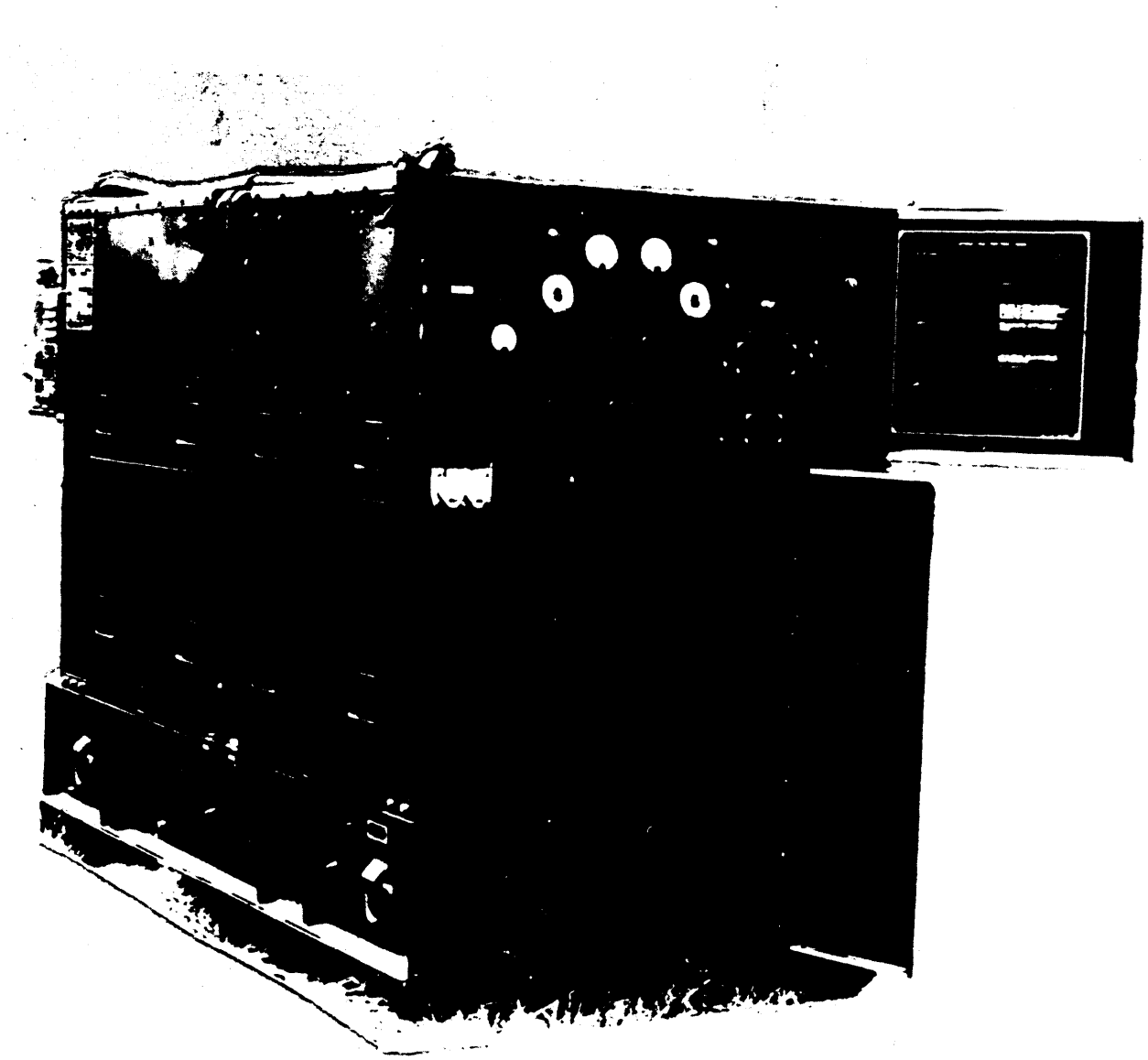

FIGURE 23. MEP-004A (15 kW, 50/60 Hz, DED).

X-3557

Source: https://assist.dla.mil -- Downloaded: 2016-12-11T08:39Z
Check the source to verify that this is the current version before use.

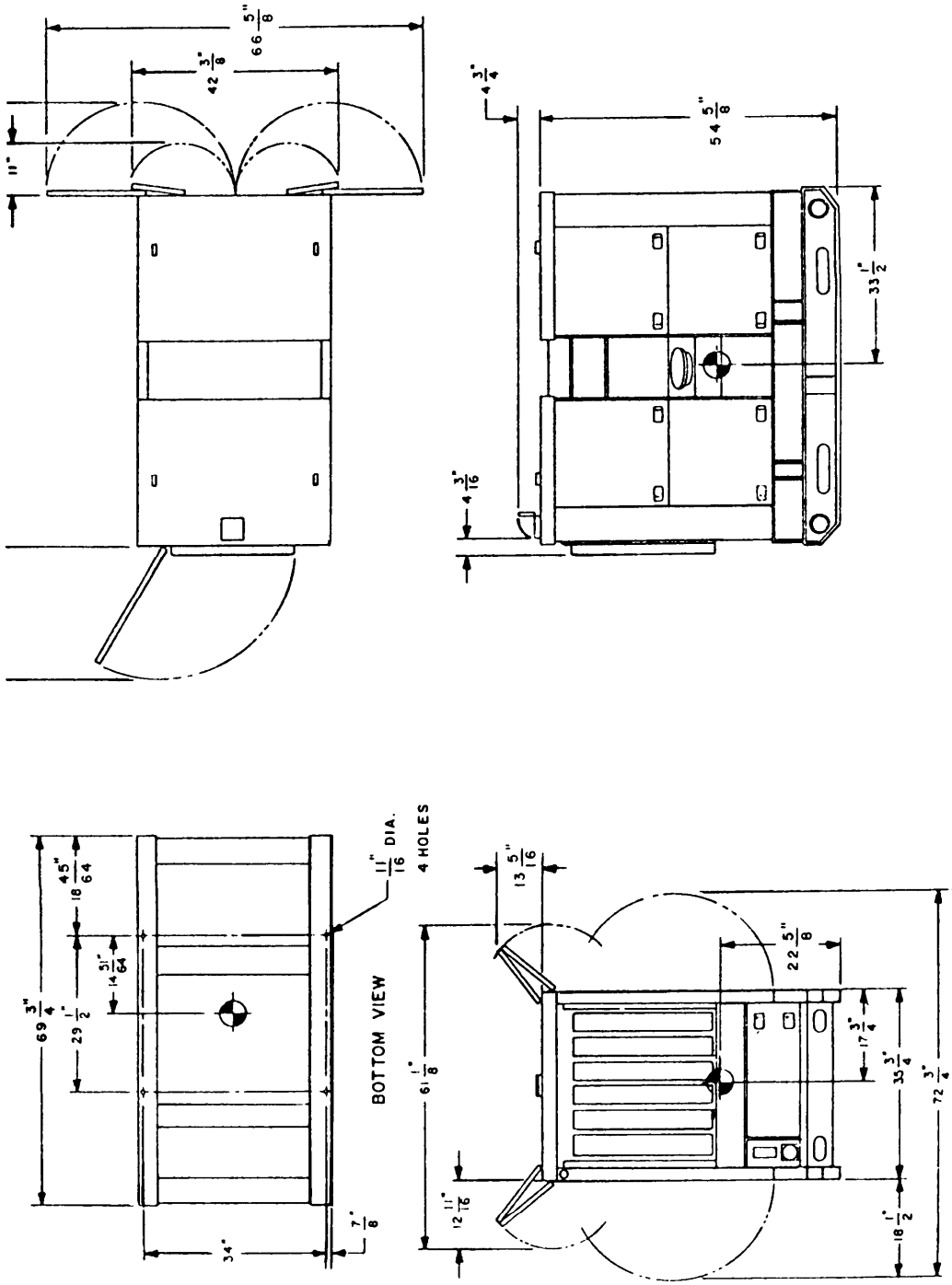

FIGURE 24. MEP-004A (15 kW, 50/60 Hz, DED).

X-3558A

Source: https://assist.dla.mil -- Downloaded: 2016-12-11T08:39Z
Check the source to verify that this is the current version before use.

MILITARY STANDARD
MOBILE ELECTRIC POWER
ENGINE GENERATOR STANDARD FAMILY
MEP-103A, 15 kW, 50-60 Hz, DIESEL ENGINE-DRIVEN GENERATOR SET
CHARACTERISTICS DATA SHEET

CLASSIFICATION

Description: 15 kW @ 0.8 power factor, 50/60 Hz, 120/208 V, 240/416 V

Model:	MEP-103A	Type:	I (tactical)
NSN:	6115-00-118-1245	Class:	I (precise)
Spec:	MIL-G-52884/l	Mode:	I (50/60 Hz)

PHYSICAL CHARTACTERICS

Dimensions: See Figures 25 and 26 on pages 100 and 101.

Weight: 2450 lbs (1111.3 kg).

Mobility: Mounted on skid base. Lifting and tie-down attachments provided. Fork lift provision.

Engine: Diesel Std: MIL_STD-1410. HorsePower: 41 @ 1800 RPM. No. of cycl: 4. Cycle: 4. Liquid cooled. 24 VDC electric start. Operating speed: 50 Hz: 1500 RPM, 60 Hz: 1800 RPM. Fuel tank capacity: 15 gallons (approx 8 hours at rated load). Fuel pump lift: 12 feet.

Fuel:
Primary: VV-F-800; Diesel Fuel Oil, types DF-1, DF-2 and DF-A.
Emergency Fuel: MIL-T-5624, Aviation Turbine Fuels, grades JP-4 and JP-5.

Electrical:
Drip proof generator enclosure. Capable of parallel operation. Fungus and moisture treatment. Solid state voltage regulator. Brushless rotary exciter.

Voltage Connection: 60 Hz: 120/208 V, 3 phase, 4 wire. 240/416 V, 3 phase, 4 wire. 50 Hz: 120/208 V, 3 phase, 4 wire. 240/416 V, 3 phase, 4 wire.

Source: https://assist.dla.mil -- Downloaded: 2016-12-11T08:39Z
Check the source to verify that this is the current version before use.

Protective Devices: Short circuit protection. Overvoltage protection. overload protection. Reverse power protection. Low oil pressure cut-off switch. High temperature cut-off switch. Low fuel level cut-off switch. Overspeed cut-off switch.

Instrumentation: Voltmeter. Frequency meter. Ammeter. Hourmeter. Wattmeter (% load). Oil pressure gage. Battery charging ammeter (% current). Fault indicating system. Temperature indicator. Fuel level.

FUNCTIONAL/OPERATIONAL CHARACTERISTICS

Reliability: Mean Time Between Failures (MTBF): 370 hours (specified).

Fuel Consumption: 1.5 gph at rated load.

Electromagnetic Interference: Suppression to MIL-STD-461 limits.

	Voltage	Frequency
Steady State Stability (variation)		
Short Term (30 see)	1% Bandwidth	0.5% Bandwidth
Long Term (4 hours)	2% Bandwidth	1% Bandwidth
Transient Performance		
Application of rated load	15% Dip	1.5% Undershoot
recovery	0.5 Sec	1 Sec
Rejection of rated load	15% Rise	1.5% Overshoot
recovery	0.5 Sec	1 Sec
Application of simulated motor load	30% Dip	
recovery	0.7% Sec	
Waveform		
Maximum Deviation Factor	5 %	
Individual Harmonic	2 %	
Regulation	1%	0.25%

Adjustment Range for Standard Voltage Connections

120/208 V Corm:	60 Hz:	197 to 240 V	50 Hz: 190 tO 213 v.
240/416 V Corm:	60 Hz:	395 to 480 V	50 Hz: 380 to 426 v.

Frequency Adjustment Range: 48 - 52 Hz. 58 - 62 Hz.

Source: https://assist.dla.mil -- Downloaded: 2016-12-11T08:39Z
Check the source to verify that this is the current version before use.

ENVIRONMENTAL DATA

Power Output at Environmental Conditions

15 kW, 60 Hz, Sea level: Minus 25° F (-31.7° C) to plus 125° F (+51.7° C)
15 kW, 60 Hz, 5000 feet: Minus 25° F (-31.7° C) to plus 107° F (+41.7° C)
12.5 kW, 50 Hz, Sea level: Minus 25° F (-31.7° C) to PIUS 125° F (+51.7° C)
12.5 kW, 50 Hz, 5000 feet: Minus 25° F (-31.7° C) to plus 107° F (+41.7° C)
Winterization system extends lower temperature limit to minus 65° F (-53.9° C)

Shock and Rough Handling: 10 mph railroad impact. 12 inch end drop. Truck and trailer transportation.

Attitude: Operate with base level or inclined no more than 15 degrees from level.

Noise level: 80 dbA @ 25 feet.

OPTIONAL EQUIPMENT

See 4.4.3 of MIL-STD-633 for additional information on optional equipment.

Description	NSN	Weight lbs (kg)	Effect on Dim (ins)
Wntzn Kit (Fuel burning)	6115-00-463-9083	45(20.4)	Int
Wntzn Kit (Electric)	6115-00-463-9085	40(18.1)	Int
Wntzn Kit, Aux, Fuel burning	6115-00-463-9098	350(158.5)	Aux: (41x40x26)
Wntzn Kit, Aux, Elect.	6115-00-463-9099	260(117.9)	Aux: (36x27x19)
Remote Control Box	6115-00-420-8490	8(3.6)	Int
Load Bank	6115-00-291-9201		Ext: L+9
Wheel Mounting Kit	6115-00-463-9094	564(255.8)	Ext: L+8, W+32, H+9
Panel, Auto, Load Transfer, 60 Hz	6115-00-477-7932	825(374.2)	Aux: (44x19x42)
Spark Arrester Kit	2990-01-032-0756	7.5(3.4)	Ext: L+12

REFERENCE DOCUMENTS

Technical Manuals:

Army	Air Force	Marine Corp	Navy
TM	TO		NAVFAC
5-6115-464-12	35C2-3-455-l	TM-07523A-12	P-8-624-12
5-6115-464-34	35C2-3-445-2	TM-07523A-34	P-8-624-34
5-6115-464-24P	35C2-3-445-4	SL-4-07523A	P-8-624-24P
LO			
5-6115-464-12		LO-07523A-12	

Source: https://assist.dla.mil -- Downloaded: 2016-12-11T08:39Z
Check the source to verify that this is the current version before use.

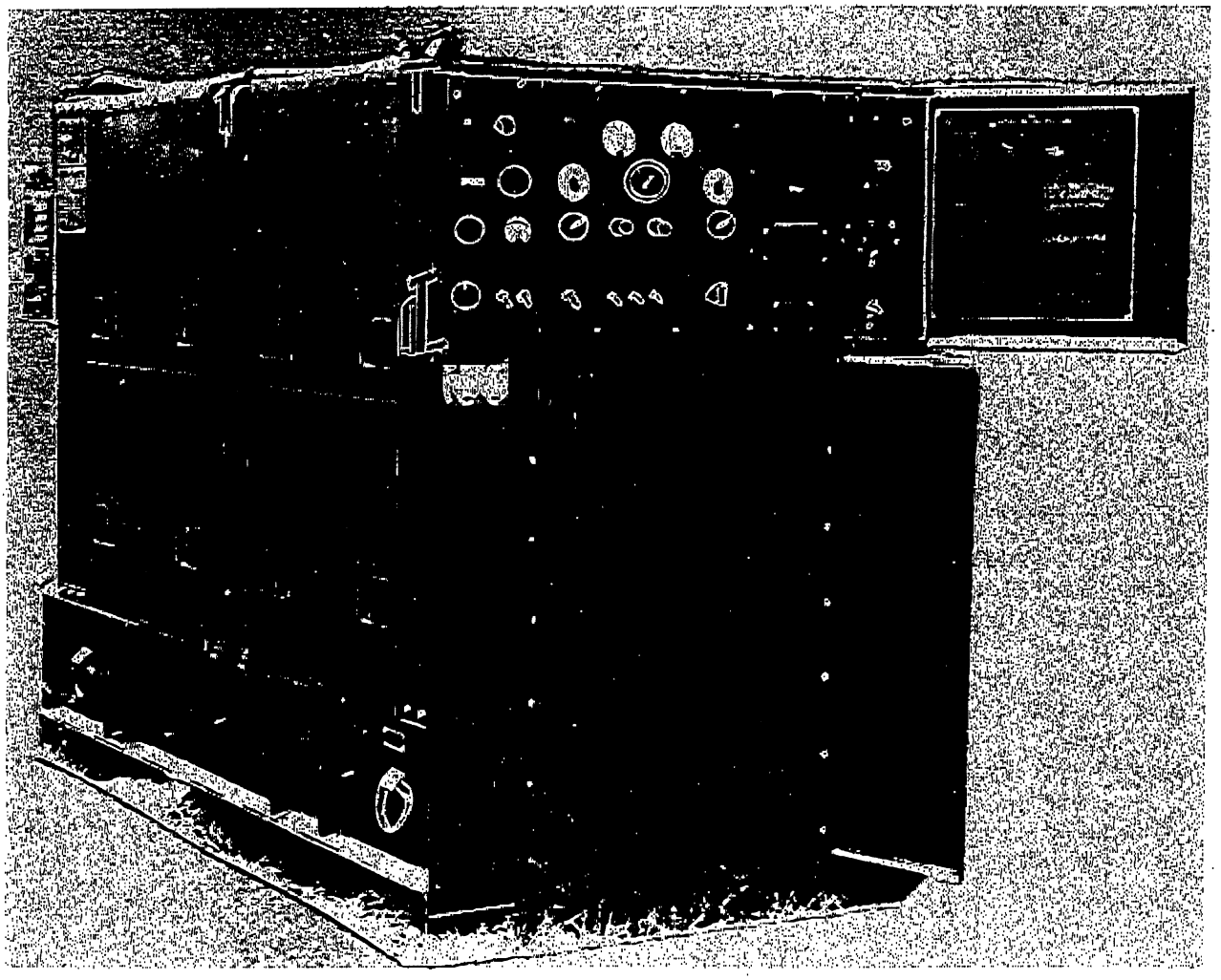

FIGURE 25. MEP-103A (15 kW, 50/60 Hz, DED).

X-3559

Source: https://assist.dla.mil -- Downloaded: 2016-12-11T08:39Z
Check the source to verify that this is the current version before use.

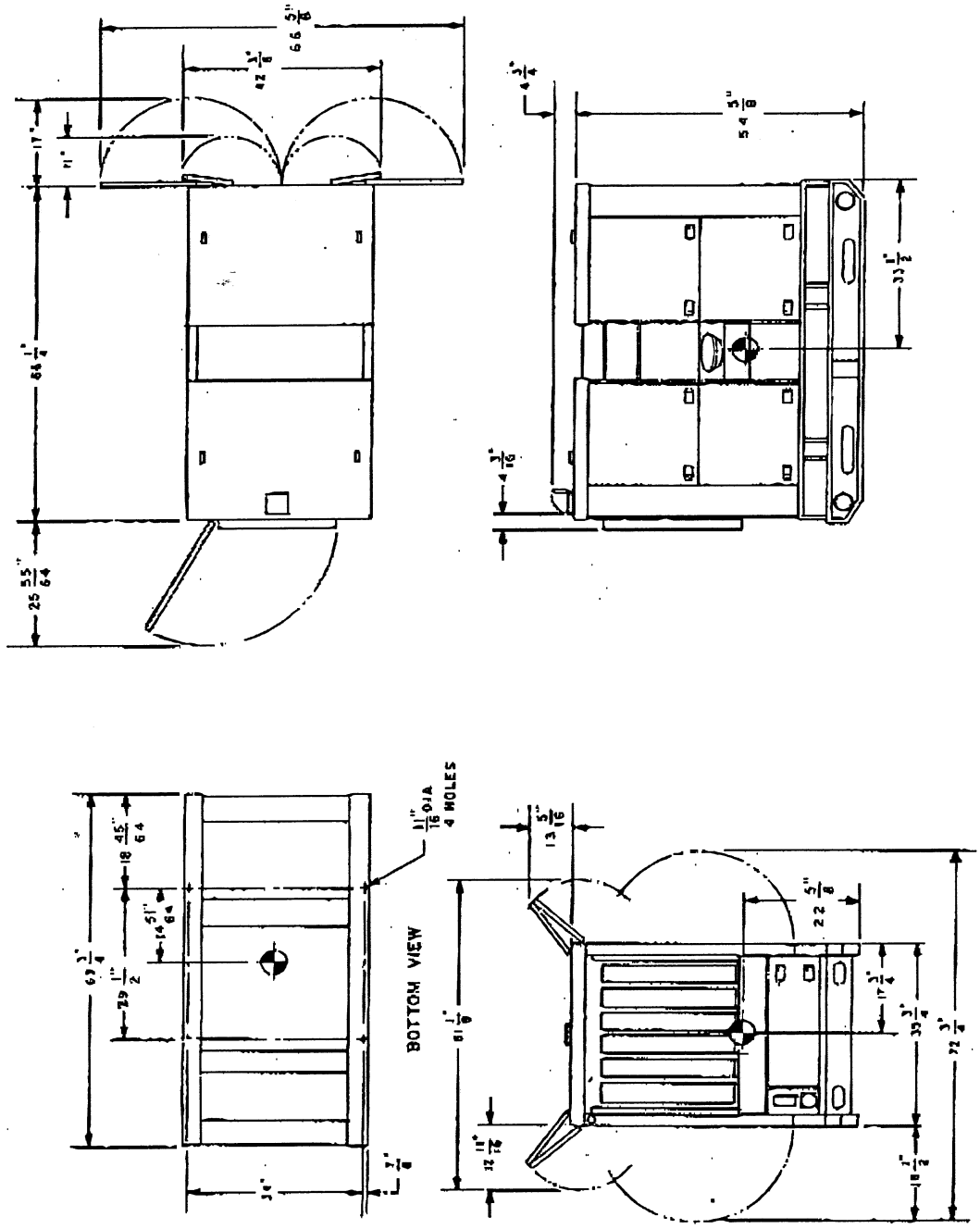

FIGURE 26. MEP-103A (15 kW, 50/60 Hz, DED).

X-3560A

Source: https://assist.dla.mil -- Downloaded: 2016-12-11T08:39Z
Check the source to verify that this is the current version before use.

MILITARY STANDARDS
MOBILE ELECTRIC POWER
ENGINE GENERATOR STANDARD FAMILY
MEP-113A, 15 kW, 400 Hz, DIESEL ENGINE-DRIVEN GENERATOR SET
CHARACTERISTICS DATA SHEET

CLASSIFICATION

Description: 15 kW @ 0.8 power factor, 400 Hz, 120/208 V, 240/416 V

NSN: 6115-00-118-1244 Class: I (precise)
Spec: MIL-G-52884/3 Mode: II (400 Hz)

PHYSICAL CHARACTERISTICS

Dimensions: See Figures 27 and 28 on pages 105 and 106.

Weight: 2500 lbs (1134 kg).

Mobility: Mounted on skid base. Lifting and tie-down attachments provided. Fork lift provision.

Engine: Diesel. Std: MIL-STD-1410. Horsepower: 45 @ 2000 RPM. No. of cyl: 4. Cycle: 4. Liquid cooled. 24 VDC electric start. Operating speed: 2000 RPM. Fuel tank capacity: 15 gallons (approx 8 hours at rated load). Fuel pump lift: 12 feet.

Fuel:
Primary: VV-F-800: Diesel Fuel Oil, types DF-1, DF-2 and DF-A.
Emergency Fuel: MIL-T-5624, Aviation Turbine Fuels, grades JP-4 and JP-5.

Electrical:

Drip proof generator enclosure. Capable of parallel operation. Fungus and moisture treatment. Solid state voltage regulator. Brushless rotary exciter.

Voltage Connection: 400 Hz: 120/208 V, 3 phase, 4 wire. 240/416 V, 3 phase, 4 wire.

Source: https://assist.dla.mil -- Downloaded: 2016-12-11T08:39Z
Check the source to verify that this is the current version before use.

Protective Devices: Short circuit protection. Overvoltage protection Overload protection. Reverse power protection. Low oil pressure cut-off switch. High temperature cut-off switch. Low fuel level cut-off switch. Overspeed cut-off switch.

Instrumentation: Voltmeter. Frequency meter. Ammeter. Hourmeter. Wattmeter (% load). Oil pressure gage. Battery charging ammeter (% current). Fault indicating system. Temperature indicator. Fuel level.

FUNCTIONAL/OPERATIONAL CHARACTERISTICS

Reliability: Mean Time Between Failures (MTBF): 370 hours (specified).

Fuel Consumption: 1.5 gph at rated load.

Electromagnetic Interference: Suppression to MIL-STD-461 limits.

	Voltage	Frequency
Steady State Stability (variation)		
Short Term (30 see)	1% Bandwidth	0.5% Bandwidth
Long Term (4 hours)	2% Bandwidth	1% Bandwidth
Transient Performance		
Application of rated load	12% Dip	1.5$ Undershoot
recovery	0.5 Sec	1 Sec
Rejection of rated load	12% Rise	1.5% Overshoot
recovery	0.5% Sec	1 Sec
Application of simulated motor load	25% Dip	
recovery	0.7 Sec	
Waveform		
Maximum Deviation Factor	5%	
Individual Harmonic	2%	
Regulation	1%	0.25

Adjustment Range for Standard Voltage Connections

120/208 v Corm: 400 Hz: 197 to 229 V.
240/416 V Corm: 400 Hz: 395 to 458 V.

Frequency Adjustment Range: 390-420 Hz.

Source: https://assist.dla.mil -- Downloaded: 2016-12-11T08:39Z
Check the source to verify that this is the current version before use.

ENVIRONMENTAL DATA

Power Output at Enivronmental Conditions

15 kW, 400 Hz, Sea level: Minus 25° F (-31.7° C) to PIUS 125° F (+51.7° C)
15 kW, 400 Hz, 5000 feet: Minus 25° F (-31.7° C) to plus 107° F (+41.7° C)
Winterization system extends lower temperature limit to minus 65° F (-53.9° C)

Shock and Rough Handling: 10 mph railroad impact. 12 inch end drop. Truck and trailer transportation.

Attitude: Operate with base level or inclined no more than 15 degrees from level.

Noise Level: 80 dbA @ 25 feet.

OPTIONAL EQUIPMENT

See 4.4.3 of MIL-STD-633 for additional information on optional equipment.

Description	NSN	Weight lbs (kg)	Effect on Dim (ins)
Wntzn Kit (Fuel burning)	6115-00-463-9083	45 (20.4)	Int
Wntzn Kit (Electric)	6115-00-463-9085	40 (18.1)	Int
Wntzn Kit, Aux, Fuel burning	6115-00-463-9098	350 (158.8)	Aux: (41x40x26)
Wntzn Kit, Aux, Elect.	6115-00-463-9099	260 (117.9)	Aux: (36x27x19)
Remote Control Box	6115-00-420-8490	8 (3.6)	Int
Load Bank	6115-00-291-9201		Ext: L+9
Wheel Mounting Kit	6115-00-463-9094	564 (255.8)	Ext: L+8,W+32,H+9
Panel, Auto, Standby, 400 Hz	6115-00-477-7932	825 (374.2)	Aux: (44x19x42)
Spark Arrester Kit	2990-01-032-0756	7.5 (3.4)	Ext: L+12

REFERENCE DOCUMENTS

Technical Manuals:

Army	Air Force	Marine Corp	Navy
TM	TO		NAVFAC
5-6115-464-12	35C2-3-445-1	TM-07523A-12	P-8-624-12
5-6115-464-34	35C2-3-445-2	TM-07523A-34	P-8-624-34
5-6115-464-24P	35C2-3-445-4	SL-4-07523A	P-8-624-24P
LO			
5-6115-464-12		LO-07523A-12	

Source: https://assist.dla.mil -- Downloaded: 2016-12-11T08:39Z
Check the source to verify that this is the current version before use.

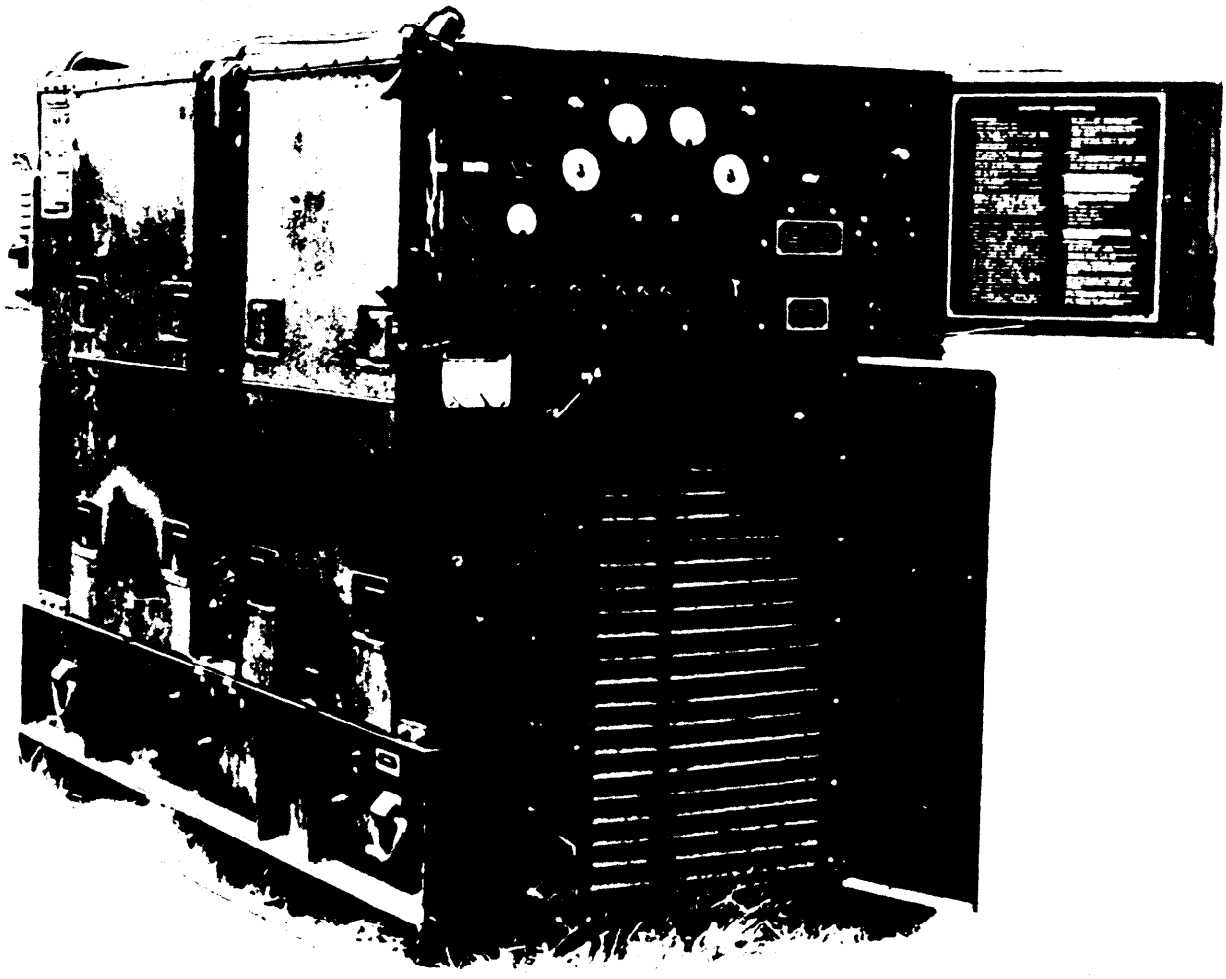

FIGURE 27. MEP-113A (15 kW, 400 Hz, DED).

X-3561

Source: https://assist.dla.mil -- Downloaded: 2016-12-11T08:39Z
Check the source to verify that this is the current version before use.

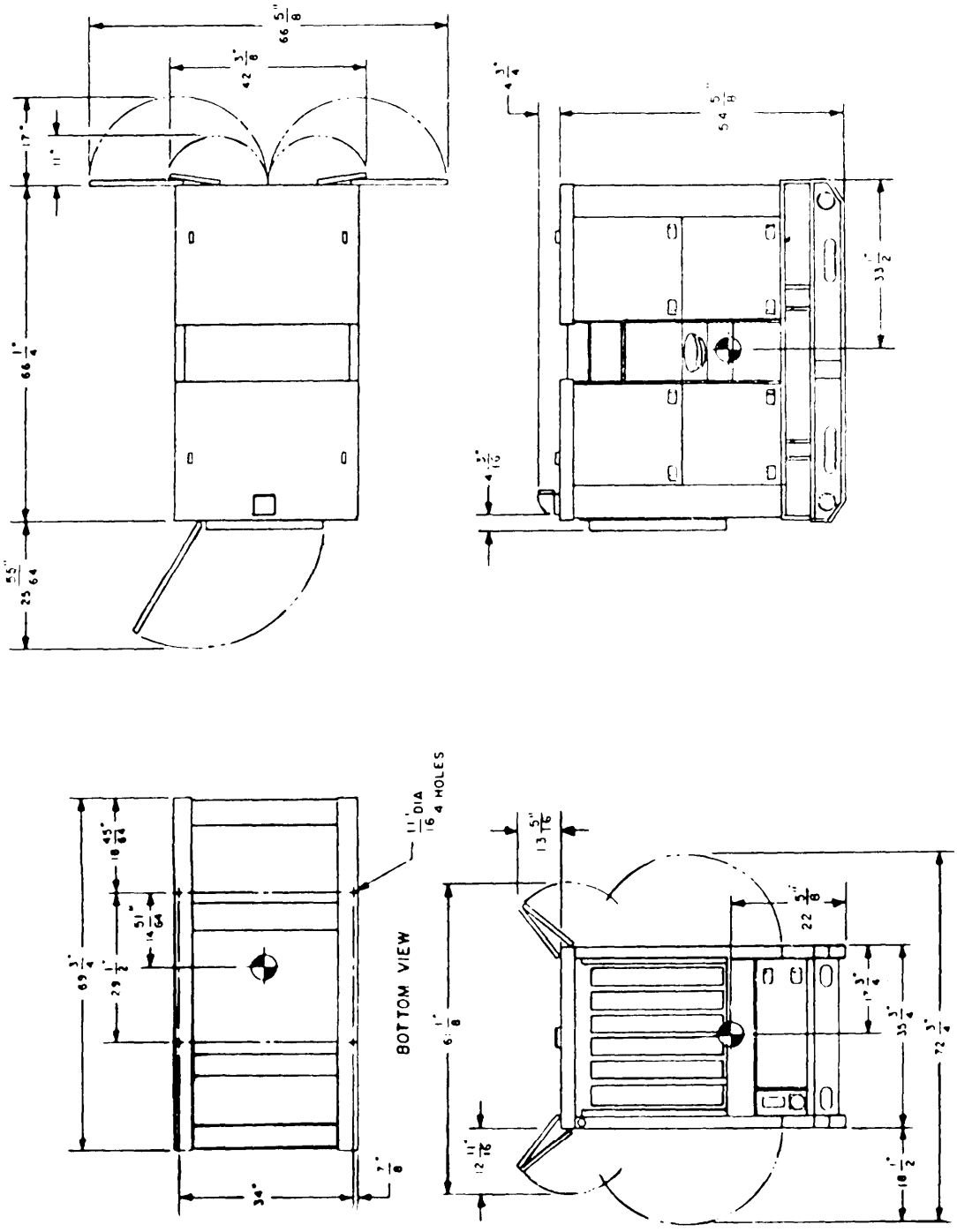

FIGURE 28. MEP-113A (15 kW, 400 Hz, DED).

X-3562A

Source: https://assist.dla.mil -- Downloaded: 2016-12-11T08:39Z
Check the source to verify that this is the current version before use.

MILITARY STANDARD
MOBILE ELECTRIC POWER
ENGINE GENERATOR STANDARD FAMILY
MEP-005A, 30 kW, 50-60 Hz, DIESEL ENGINE-DRIVEN GENERATOR SET
CHARACTERISTICS DATA SHEET

CLASSIFICATION

Description: 30 kW @ 0.8 power factor, 50/60 Hz, 120/208 V, 240/416 V

Model:	MEP-005A	Type:	I (tactical)
NSN:	6115-00-118-1240	Class:	2 (utility)
Spec:	MIL-G-52884/5	Mode:	I (50/60 Hz)

PHYSICAL CHARACTERISTICS

Dimensions: See Figures 29 and 30 on pages 110 and 111.

Weight: 2850 lbs (1293 kg).

Mobility: Fully housed. Mounted on skid base. Lifting and tie-down attachments provided. Fork lift provision.

Engine: Diesel. Std: MIL-STD-1410. Horsepower: 57 @ 1800 RPM. No. of cyl: 6. Cycle: 4. Liquid cooled. 24 VDC electric start. Operating speed: 50 Hz: 1500 RPM, 60 Hz: 1800 RPM. Fuel tank capacity: 26 gallons (approx 8 hours at rated load). Fuel pump lift: 12 feet.

Fuel:
Primary: VV-F-800: Diesel Fuel Oil, types DF-1, DF-2 and DF-A.
Emergency Fuel: MIL-T-5624, Aviation Turbine Fuels, grades JP-4 an JP-5.

Electrical:
Drip proof generator enclosure. Capable of parallel operation. Fungus and moisture treatment. Solid state voltage regulator. Brushless rotary exciter.

Voltage Connection: 60 Hz: 120/208 V, 3 phase, 4 wire. 240/416 V, 3 phase, 4 Wire. 50 Hz: 120/208 V, 3 phase, 4 wire. 240/416 V, 3 phase, 4 wire.

Source: https://assist.dla.mil -- Downloaded: 2016-12-11T08:39Z
Check the source to verify that this is the current version before use.

Protective Devices: Short circuit protection. Overvoltage protection. Overload protection. Reverse power protection. Low oil pressure cut-off switch. High temperature cut-off switch. Low fuel level cut-off switch. Overspeed cut-off switch.

Instrumentation: Voltmeter. Frequency meter. Ammeter. Hourmeter. Wattmeter (% load). Oil pressure gage. Battery charging ammeter (% current). Fault indicating system. Coolant temperature indicator. Fuel level.

FUNCTIGNAL/OPERATIONAL CHARACTERISTICS

Reliability: Mean Time Between Failures (MTBF): 670 hours (specified).

Fuel Consumption: 3 gph at rated load.

Electromagnetic Interference: Suppression to MIL-STD-461 limits.

	Voltage	Frequency
Steady State Stability (variation)		
Short Term (30 see)	2% Bandwidth	2% Bandwidth
Long Term (4 hours)	4% Bandwidth	3% Bandwidth
Transient Performance		
Application of rated load	20% Dip	3% Undershoot
recovery	3 Sec	3 Sec
Rejection of rated load	20% Rise	4% Overshoot
recovery	3 Sec	3 Sec
Application of simulated motor load	40% Dip	
recovery	5 Sec	
Waveform		
Maximum Deviation Factor	5%	
Individual Harmonic	2%	
Regulation	3%	2-3% (Adjustable)

Adjustment Range for Standard Voltage Connections

120/208 V Corm: 60 Hz: 197 to 240 V. 50 Hz: 190 to 213 v.
240/416 V Corm: 60 Hz: 395 to 480 V. 50 Hz: 380 to 426 V.

Frequency Adjustment Range: 58 to 62 Hz. 48 to 52 Hz.

Source: https://assist.dla.mil -- Downloaded: 2016-12-11T08:39Z
Check the source to verify that this is the current version before use.

ENVIRONMENTAL DATA

Power Output at Environmental Conditions:

30 kW, 60 Hz, sea level:	Minus 25° F (-31.7° C) to plus 125° F (+51.7° C)
30 kW, 60 Hz, 5000 feet:	Minus 25° F (-31.7° C) to plus 107° F (+41.7° C)
25 kW, 50 Hz, Sea level:	Minus 25° F (-31.7° C) to plus 125° F (+51.7° C)
25 kW, 50 hz, 5000 feet:	Minus 25° F (-31.7° C) to plus 107° F (+41.7° C)

Winterization system extends lower temperature limit to minus 65° F (-53.9° C)

Shock and Rough Handling: 10 mph railroad impact. 12 inch end drop. Truck and trailer transportation.

Attitude: Operate with base level or inclined no more than 15 degrees from level.

Noise Level: 82 dbA @ 25 feet.

OPTIONAL EQUIPMENT

SEe 4.4.3 of MIL-STD-633 for additional information on optional equipment.

Description	NSN	Weight lbs(KG)	Effect on Dim (ins)
Wntzn Kit (Fuel burning)		45 (20.4)	Int
Wntzn Kit (Electric)		40 (18.1)	Int
Wntzn Kit, Aux, Fuel burning		350 (158.8)	Aux: (41x40x26)
Wntzn Kit, Aux, Elect		260 (117.9)	Aux: (36x27x19)
Remote Control box		8 (3.6)	Int
Load Bank			Ext: L+9
Wheel Mounting Kit		564 (255.8)	Ext: L+8,W+32,H+9
Panel, Auto, Load Transfer, 60 Hz		825 (374.2)	Aux: (44x19x42)
Paralleling Cable		4 (1.8)	Ext: (L-25 ft)
Relay Assemble, Precise			Int
Spark Arrester Kit		7.5 (3.4)	

REFERENCE DOCUMENTS

Technical Manuals:

Army	Air Force	Marine Corps	Navy
TM	TO		NAVFAC
5-6115-465-12	35C2-3-446-1	TM-06858B/065859D-12	P-8-625-12
5-6115-465-34	35C-3-446-2	TM-06958B/06859D-34	P-8-625-34
5-6115-465-24P	35C-446-4	SL-4-06858B/06859P	P-8-625-24P
LO			
5-6115-465-12		LO-06858A-06859A-12	

Source: https://assist.dla.mil -- Downloaded: 2016-12-11T08:39Z
Check the source to verify that this is the current version before use.

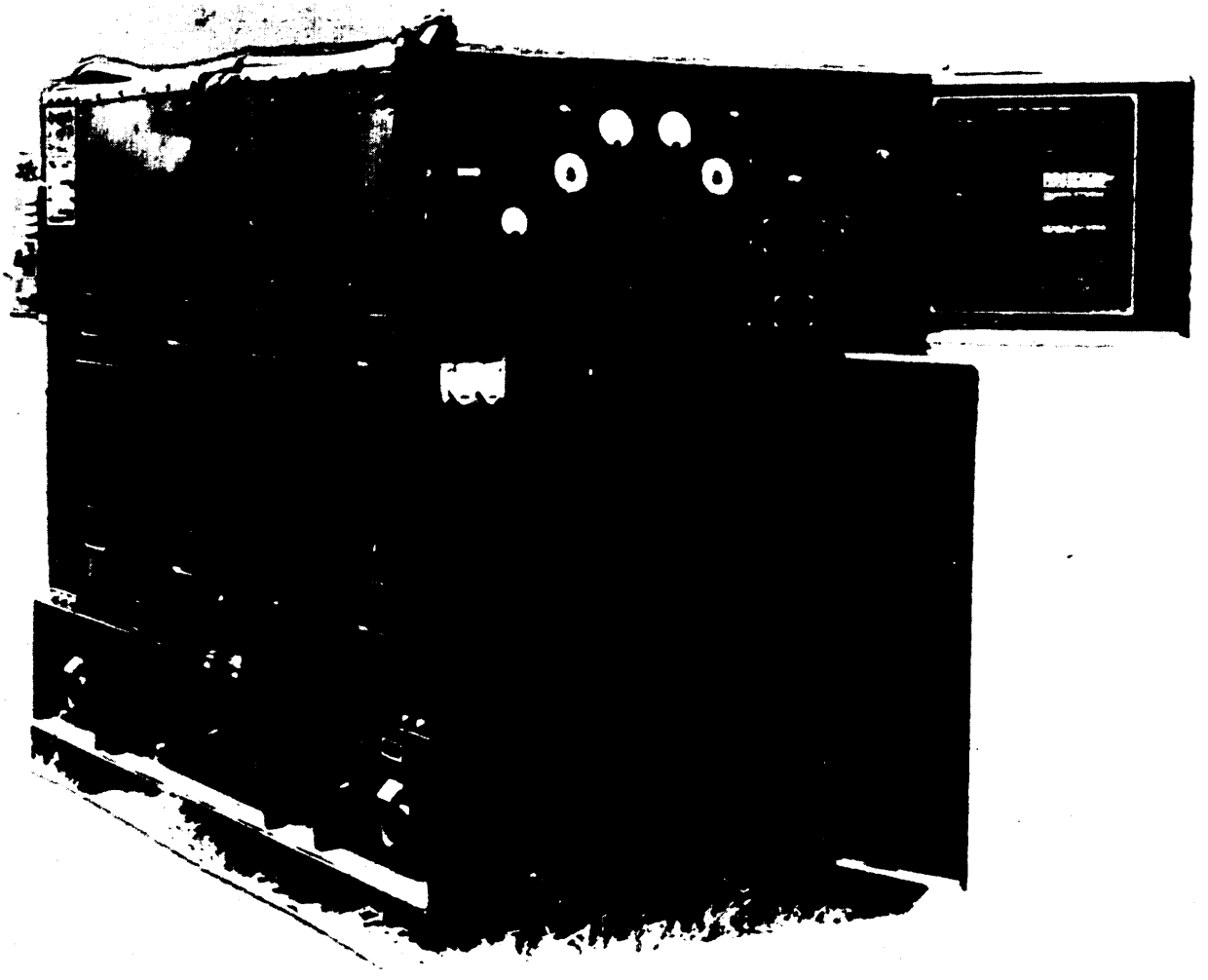

FIGURE 29. MEP-005A (30 kW, 50/60 Hz, DED).

X-3563

Source: https://assist.dla.mil -- Downloaded: 2016-12-11T08:39Z
Check the source to verify that this is the current version before use.

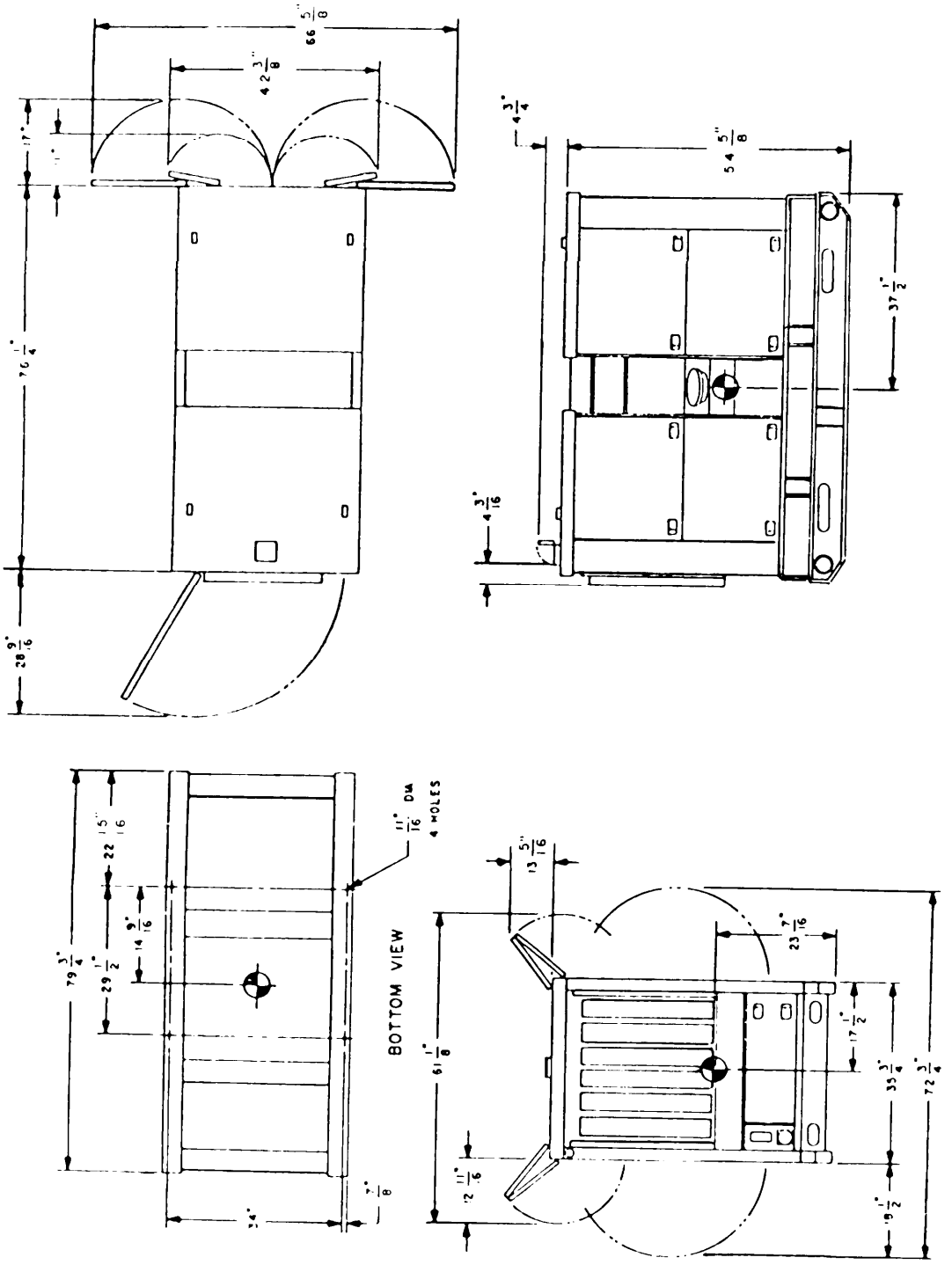

X-3564A

FIGURE 30. MEP-005A (30 kW, 50/60 Hz, DED).

Source: https://assist.dla.mil -- Downloaded: 2016-12-11T08:39Z
Check the source to verify that this is the current version before use.

MILITARY STANDARD
MOBILE ELECTRIC POWER
ENGINE GENERATOR STANDARD FAMILY
MEP-104A, 30 kW, 50-60 Hz, DIESEL ENGINE-DRIVEN GENERATOR SET
CHARACTERISTICS DATA SHEET

CLASSIFICATION

Description: 30 kW @ 0.8 power factor, 50/60 Hz, 120/208 V, 240/416 V

Model:	MEP-104A	Type:	I (tactical)
NSN:	6115-00-118-1247	Class:	1 (precise)
Spec:	MIL-G-52884/4	Mode:	I (50/60 Hz)

PHYSICAL CHARACTERISTICS

Dimensions: See Figures 31 and 32 on pages 115 and 116.

Weight: 2850 lbs (1293 kg).

Mobility: Fully housed. Mounted on skid base. Lifting and tie-down attachments provided. Fork lift provision.

Engine: Diesel. Std: MIL-STD-1410.Horsepower: 57 1800 RPM. No. of cyl: 6. Cycle 4. Liquid cooled. 24 VDC electric start. Operating speed: 50 Hz: 1500 RPM, 60 Hz: 1800 RPM. Fuel tank capacity: 26 gallons (approx 8 hours at rated load). Fuel pump lift: 12 feet.

Fuel:
Primary: VV-F-800: Diesel Fuel Oil, types DF-1, DF-2 and DF-A.
Emergency Fuel: MIL-T-5624, Aviation Turbine Fuels, grades JP-4 and JP-5.

Electrical:
Drip proof generator enclosure. Capable of parallel operation. Fungus and moisture treatment. Solid state voltage regulator. Brushless rotary exciter.

Voltage Connection:
60 Hz: 120/208 v, 3 phase, 4 Wire. 240/416 V, 3 phase, 4 wire.
50 Hz: 120/208 v, 3 phase, 4 wire. 240/416 V, 3 phase, 4 wire.

Source: https://assist.dla.mil -- Downloaded: 2016-12-11T08:39Z
Check the source to verify that this is the current version before use.

Protective Devices: Short circuit protection. Overvoltage protection. Overload protection. Reverse power protection. Low oil pressure cut-off switch. High temperature cut-off switch. Low fuel level cut-off switch. Overspeed cut-off switch.

Instrumentation: Voltmeter. Frequency meter. Ammeter. Hourmeter. Wattmeter (% load). Oil pressure gage. Battery charging ammeter (% current). Fault indicating system. Coolant temperature indicator. Fuel level.

FUNCTIONAL/OPERATIONAL CHARACTERISTICS

Reliability: Mean Time Between Failures (MTBF): 370 hours (specified).

Fuel Consumption: 3 gph at rated load.

Electromagnetic Interference: Suppression to MIL-STD-461 limits.

	Voltage	Frequency
Steady State Stability (variation)		
Short Term (30 see)	1% Bandwidth	0.5% Bandwidth
Long Term (4 hours)	2% Bandwidth	1% Bandwidth
Transient Performance		
Application of rated load	15% Dip	1.5% Undershoot
recovery	0.5 Sec	1 Sec
Rejection of rated load	15% Rise	1.5% Overshoot
recovery	0.5 Sec	1 Sec
Application of simulated motor load	30% Dip	
recovery	0.7 Sec	
Waveform		
Maximum Deviation Factor	5%	
Individual Harmonic	2%	
Regulation	1%	0.25%

Adjustment Range for Standard Voltage Connections

120/208 v Corm: 60 Hz: 197 to 240 V. 50 Hz: 190 to 213 v.
240/416 V Corm: 60 Hz: 395 to 480 V. 50 Hz: 380 to 426 V.

Frequency Adjustment Range:
58 to 62 Hz. 48 to 52 Hz.

Source: https://assist.dla.mil -- Downloaded: 2016-12-11T08:39Z
Check the source to verify that this is the current version before use.

ENVIRONMENTAL DATA

Power Output at Environmental Conditions:

30 kW, 60 Hz, Sea level: Minus 25° F (-31.7° C) to plus 125° F (+51.7° C)
30 kW, 60 Hz, 5000 feet: Minus 25° F (-31.7° C) to plus 107° F (+41.7° c)
25 kW, 50 Hz, Sea level: Minus 25° F (-31.7° C) to plus 125° F (+51.7° C)
25 kW, 50 Hz, 5000 feet: Minus 25° F (-31.7° C) to plus 107° F (+41.7° C)
Winterization system extends lower temperature limit to minus 65° F (-53.9° C).

Shock and Rough Handling: 10 mph railroad impact. 12 inch end drop. Truck and trailer transportation.

Attitude: Operate with base level or inclined no more than 15 degrees from level.

Noise Level: 82 dbA @ 25 feet.

OPTIONAL EQUIPMENT

See 4.4.3 of MIL-STD-633 for additional information on optional equipment.

Description	NSN	Weight lbs (kg)	Effect on Dim (ins)
Wntzn Kit (Fuel burning)	6115-00-463-9083	45 (20.4)	Int
Wntzn Kit (Electric)	6115-00-463-9085	110 (18.1)	Int
Wntzn Kit, Aux, Fuel burning	6115-00-463-9098	350 (158.8)	Aux: (41x40x26)
Wntzn Kit, Aux, Elect.	6115-00-463-9099	260 (117.9)	Aux: (36x27x19)
Remote Control Box	6115-00-420-8490	8 (3.6)	Int
Load Bank	6115-00-463-9088		Ext: L+9
Wheel Mounting Kit	6115-00-463-9094	564 (255.8)	Ext: L+8,W+32,H+9
Panel, Auto, Load Transfer, 60 Hz	6115-00-477-7932	825 (374.2)	Aux: (44x19x42)
Spark Arrester Kit	2990-01-032-0756	7.5 (304)	Ext: L+12

REFERENCE DOCUMENTS

Technical Manuals:

Army	Air Force	Marine Corps	Navy
TM	TO		NAVFAC
5-6115-465-12	35C2-3-446-1	TM-06858B/065859D-12	P-8-625-12
5-6115-465-34	35C2-3-446-2	TM-06958B/06859D-34	P-8-625-34
5-6115-465-24P	35C2-3-446-4	SL-4-06858B/06859p	P-8-625-24P
LO			
5-6115-465-12		LO-06858A-06859A-12	

Source: https://assist.dla.mil -- Downloaded: 2016-12-11T08:39Z
Check the source to verify that this is the current version before use.

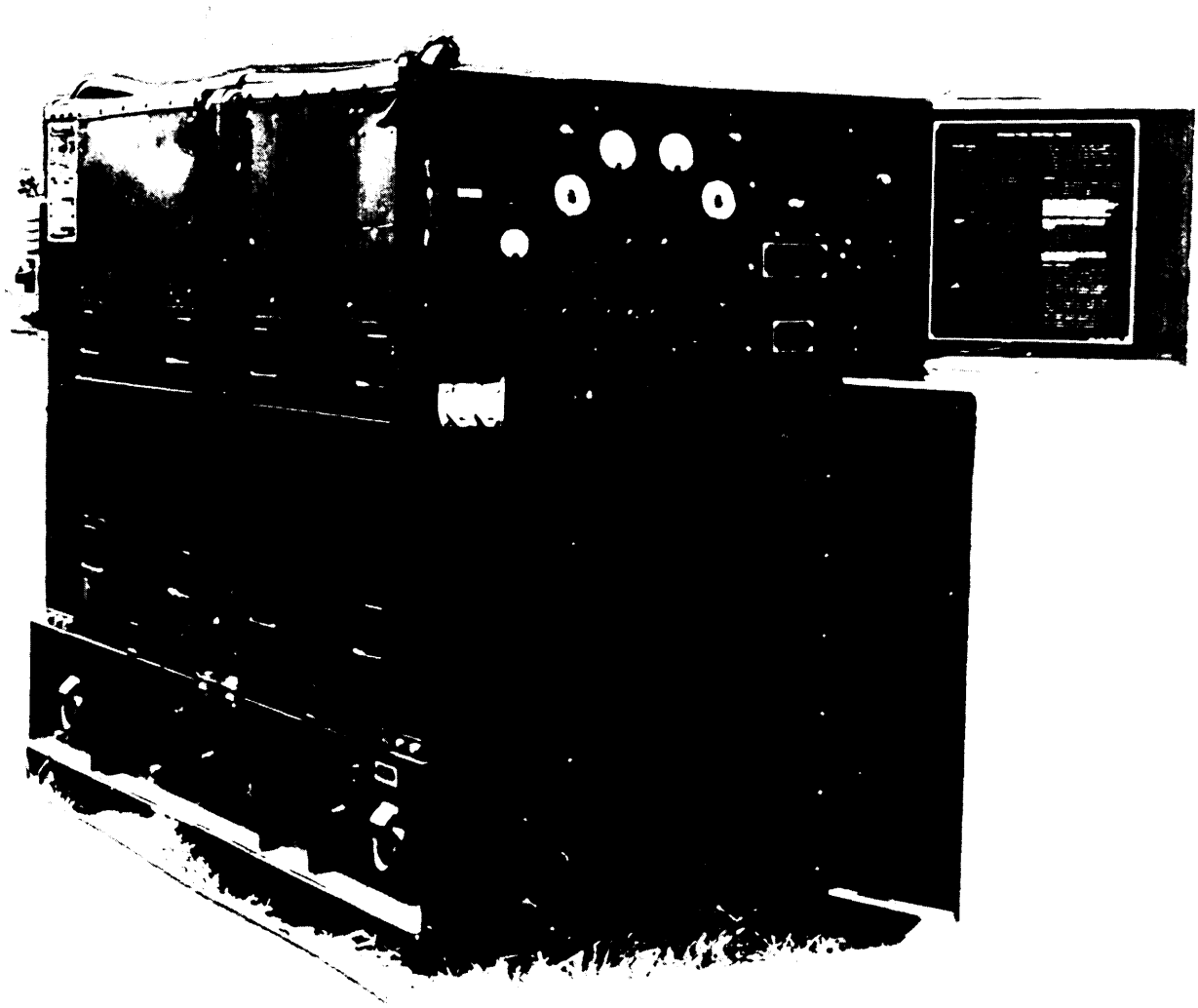

FIGURE 31 MEP-104A (30 kW, 50/60 Hz, DED).

X-3565

Source: https://assist.dla.mil -- Downloaded: 2016-12-11T08:39Z
Check the source to verify that this is the current version before use.

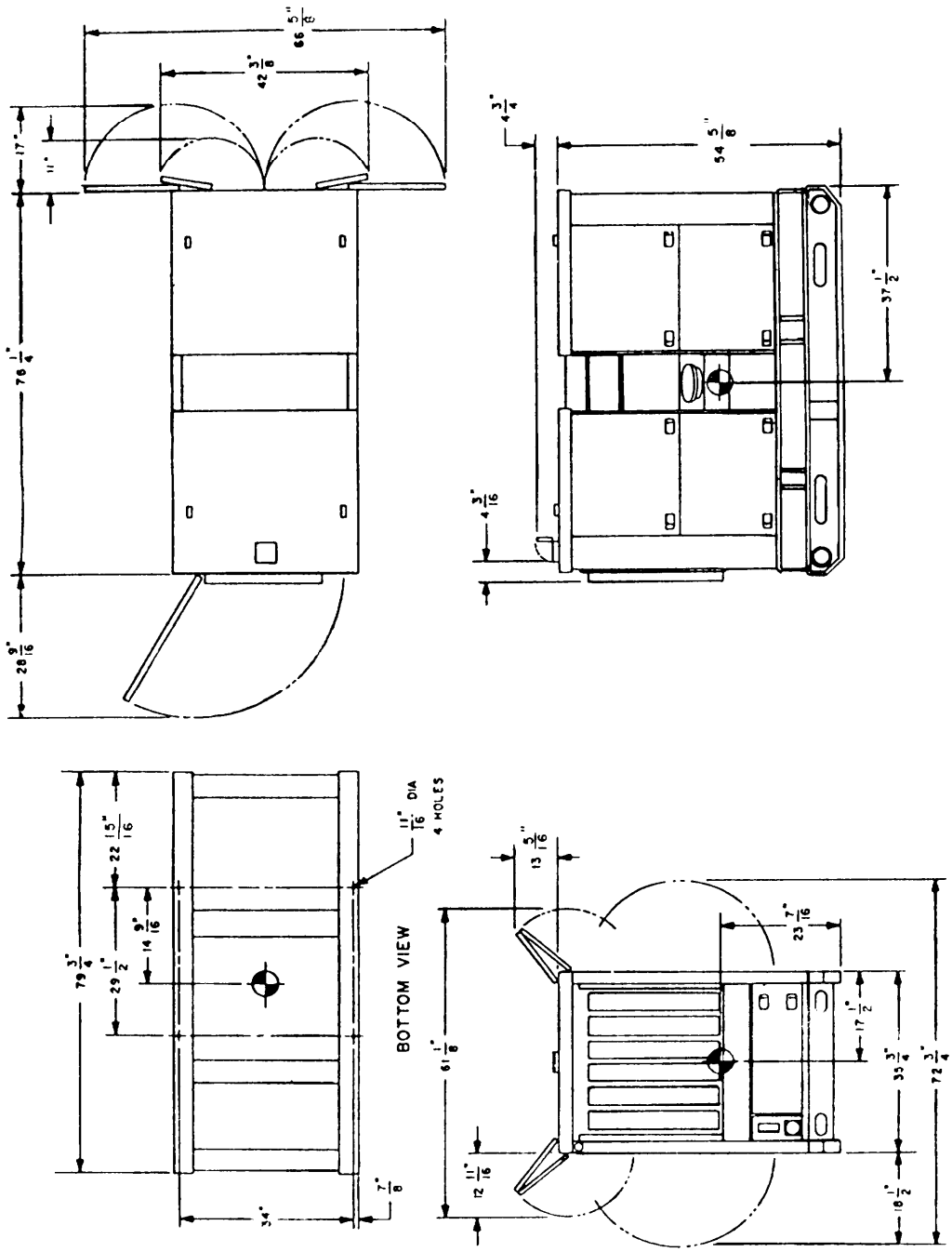

FIGURE 32. MEP-104A (30 kW, 50/60 Hz, DED).

X-3566A

Source: https://assist.dla.mil -- Downloaded: 2016-12-11T08:39Z
Check the source to verify that this is the current version before use.

MILITARY STANDARD
MOBILE ELECTRIC POWER
ENGINE GENERATOR STANDARD FAMILY
MEP-114A, 30 kW, 400 Hz, DIESEL ENGINE-DRIVEN GENERATOR SET
CHARACTERISTICS DATA SHEET

CLASSIFICATION

Description: 30 kW @ 0.8 power factor, 400 Hz, 120/208 V, 240/416 V

Model:	MEP-114A	Type:	I (tactical)
NSN:	6115-00-118-1248	Class:	1 (precise)
Spec:	MIL-G-52884/6	Mode:	II (400 Hz)

PHYSICAL CHARACTERISTICS

Dimensions: See Figures 33 and 34 on pages 120 and 121.

Weight: 3000 lbs (1360.8 kg).

Mobility: Fully housed. Mounted on skid base. Lifting and tie-down attachments provided. Fork lift provision.

Engine: Diesel. Std: MIL-STD-1410. Horsepower: 64 @ 2000 RPM. No. of : 6. Cycle: 4. Liquid cooled. 24 VDC electric start. Operating speed: 400 Hz: 2000 RPM. Fuel tank capacity: 26 gallons (approx 8 hours at rated load). Fuel pump lift: 12 feet.

Fuel:
Primary: VV-F-800; Diesel Fuel Oil, types DF-1, DF-2 and DF-A.
Emergency Fuel: MIL-T-5624, Aviation Turbine Fuels, grades JP-4 and JP-5.

Electrical:
Drip proof generator enclosure. Capable of parallel operation. Fungus and moisture treatment. Solid state voltage regulator. Brushless rotary exciter.

Voltage Connection:
400 Hz: 120/208 V, 3 phase, 4 wire. 240/416 V, 3 phase, 4 wire.

Source: https://assist.dla.mil -- Downloaded: 2016-12-11T08:39Z
Check the source to verify that this is the current version before use.

Protective Devices: Short circuit protection. Overvoltage protection. Overload protection. Reverse power protection. Low oil pressure cut-off switch. High temperature cut-off switch. Low fuel level cut-off switch. Overspeed cut-off switch.

Instrumentation: Voltmeter. Frequency meter. Ammeter. Hourmeter. Wattmeter (% load). Oil pressure gage. Battery charging ammeter (% current). Fault indicating system. Coolant temperature indicator. Fuel level.

FUNCTIONAL/OPERATIONAL CHARACTERISTICS

Reliability: Mean Time Between Failure (MTBF): 70 hours (specified).

Fuel Consumption: 3 gph at rated load.

Electromagnetic Interference: Suppression to MIL-STD-461 limits.

	Voltage	Frequency
Steady State Stability (variation)		
Short Term (30 see)	1% Bandwidth	0.5% Bandwidth
Long Term (4 hours)	2% Bandwidth	1% Bandwidth
Transient Performance		
Application of rated load	12% Dip	1.5% Undershoot
recovery	0.5 Sec	1 Sec
Rejection of rated load	12% Rise	1.5% Overshoot
recovery	0.5 Sec	1 Sec
Application of simulated motor load	25% Dip	
recovery	0.7 See	
Waveform		
Maximum Deviation Factor	5%	
Individual Harmonic	2%	
Regulation	1%	0.25%

Adjustment Range for Standard Voltage Connections

120/208 v Corm:	60 Hz:	197 to 229 V.
240/416 V Corm:	60 Hz:	395 to 458 V.

Frequency Adjustment Range: 390 to 420 Hz.

Source: https://assist.dla.mil -- Downloaded: 2016-12-11T08:39Z
Check the source to verify that this is the current version before use.

ENVIRONMENTAL DATA

Power Output at Environmental Conditions:

30 kW, 400 Hz, Sea level: Minus 25° F (-31.7° C) to plus 125° F (+51.7° C)
30 kW, 400 HZ, 5000 feet: Minus 25° F (-31.7° C) to plus 107° F (+41.7° C)
Winterization system extends lower temperature limit to -65° F (-53.9° C).

Shock and Rough Handling: 10 mph railroad impact. 12 inch end drop. Truck and trailer transportation.

Attitude: Operate with base level or inclined no more than 15 degrees from level.

Noise Level: 82 dbA @ 25 feet.

OPTIONAL EQUIPMENT

See 4.4.3 of MIL-STD-633 for additional information on optional equipment.

Description	NSN	Weight lbs (kg)	Effect on Dim (ins)
Wntzn Kit (Fuel burning)	6115-00-463-9083	45 (20.4)	Int
Wntzn Kit (Electric)	6115-00-463-9085	40 (18.1)	Int
Wntzn Kit, Aux, Fuel burning	6115-00-463-9098	350 (158.8)	Aux: (41x40x26)
Wntzn Kit, Aux, Elect.	6115-00-463-9099	260 (117.9)	Aux: (36x27x19)
Remote Control Box	6115-00-420-8490	8 (3.6)	Int
Load Bank	6115-00-463-9088		Ext: L+9
Wheel Mounting Kit	6115-00-463-9094	564 (255.8)	Ext: L+8,W+32,H+9
Panel, Auto Standby, 400 Hz	6115-00-463-9096	12 (5.4)	Int:
Spark Arrester Kit	2990-01-032-0756	7.5 (3.4)	Ext: L+12

REFERENCE DOCUMENTS

Technical Manuals:

Army	Air Force	Marine Corps	Navy
TM	TO		NAVFAC
5-6115-465-12	35C2-3-446-l	TM-06858B/065859D-12	P-8-625-12
5-6115-465-34	35C2-3-446-2	TM-06958B/06859D-34	P-8-625-34
5-6115-465-24P	35C2-3-446-4	SL-4-06858B/06859P	P-8-625-24P
LO			
5-6115-465-12		LO-06858A-06859A-12	

Source: https://assist.dla.mil -- Downloaded: 2016-12-11T08:39Z
Check the source to verify that this is the current version before use.

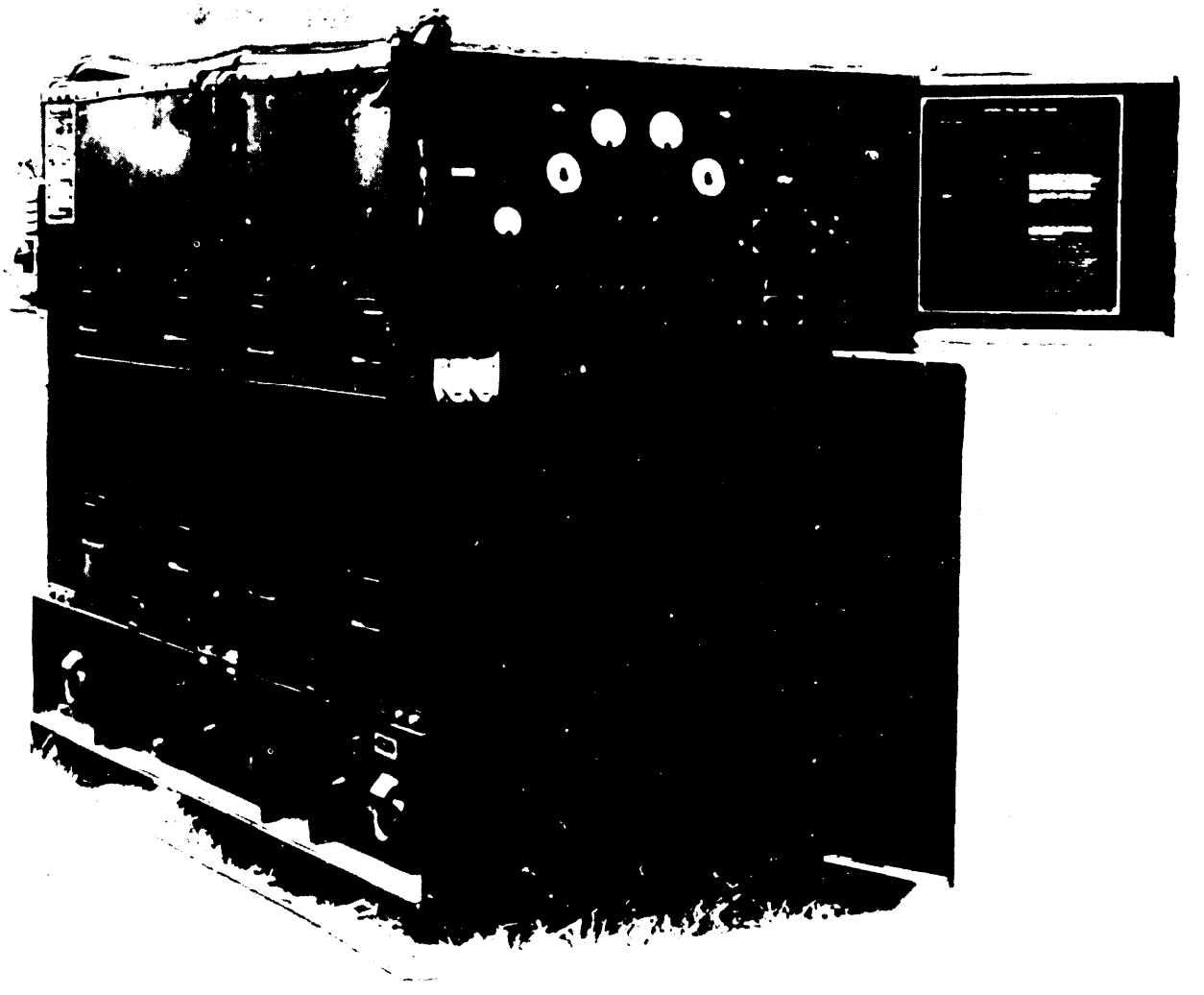

FIGURE 33. MEP-114A (30 kW, 400 Hz, DED).

X-3567

Source: https://assist.dla.mil -- Downloaded: 2016-12-11T08:39Z
Check the source to verify that this is the current version before use.

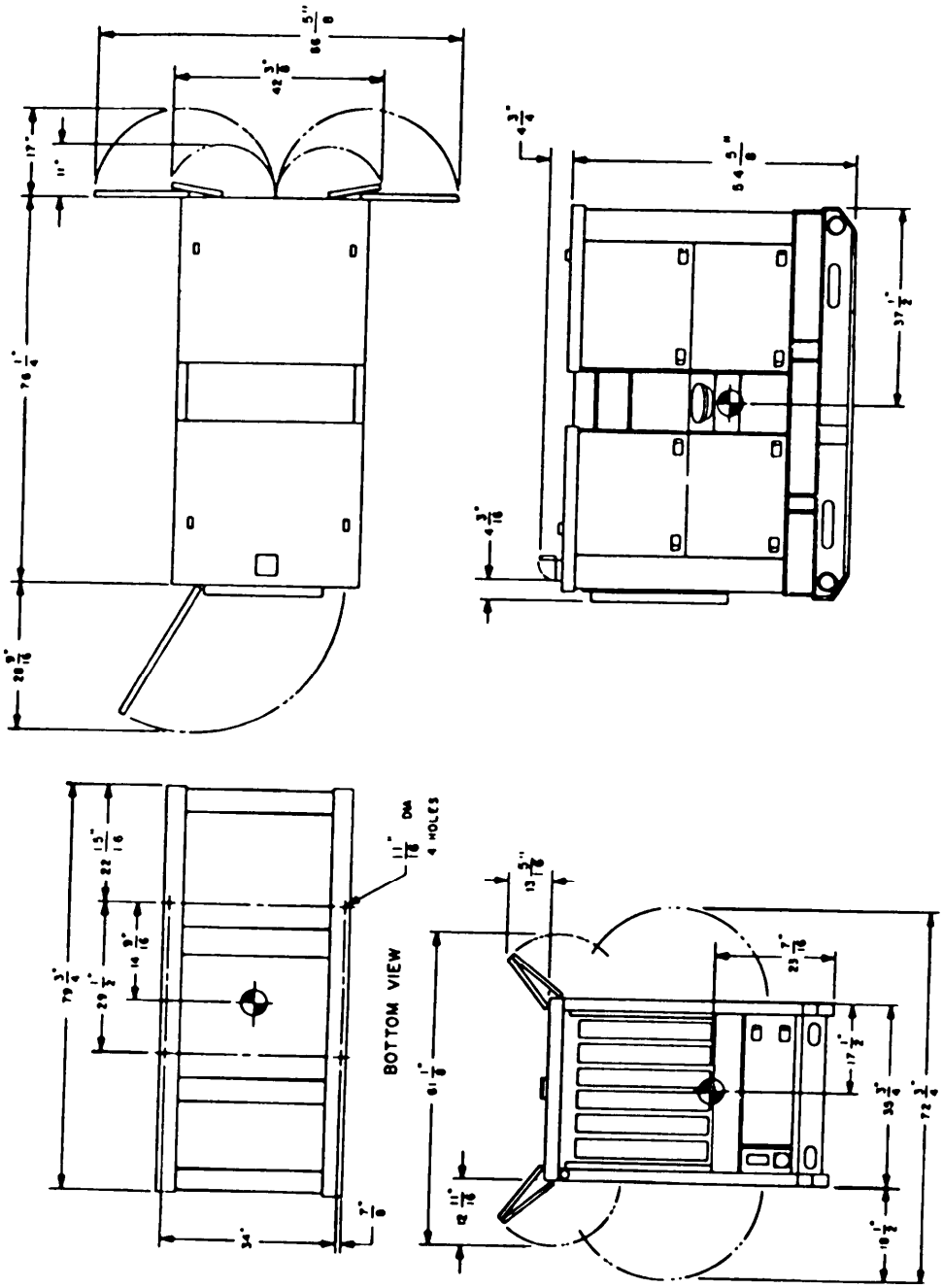

FIGURE 34. MEP-114A (30 kW, 400 Hz, DED).

X-3568A

Source: https://assist.dla.mil -- Downloaded: 2016-12-11T08:39Z
Check the source to verify that this is the current version before use.

MILITARY STANDARD
MOBILE ELECTRIC POWER
ENGINE GENERATOR STANDARD FAMILY
MEP-006A, 60 kW, 50-60 Hz, DIESEL ENGINE-DRIVEN GENERATOR SET
CHARACTERISTICS DATA SHEET

CLASSIFICATION

Description: 60 kW @ 0.8 power factor, 50/60 Hz, 120/208 V, 240/416 V

Model:	MEP-006A	Type:	I (tactical)
NSN:	6115-00-118-1243	Class:	2 (utility)
Spec:	MIL-G-52884/8	Mode:	I (50/60 Hz)

PHYSICAL CHARACTERISTICS

Dimensions: See Figures 35 and 36 on pages 125 and 126.

Weight: 4240 lbs (1923 kg).

Mobillty: Fully housed. Mounted on skid base. Lifting and tie-down attachments provided. Fork lift provision.

Engine: Diesel. Std: MIL-STD-1410. Horsepower: 167 @ 1800 RPM. No. of Cyl: 6. Cycle 4. Liquid cooled. 24 VDC electric start. Operating speed: 50 Hz: 1500 RPM, 60 Hz: 1800 RPM. Fuel tank capacity: 55 gallons (approx 8 hours at rated load). Fuel pump lift: 12 feet.

Fuel:
Primary: VV-F-800; Diesel Fuel Oil, types DF-1, DF-2 and DF-A.
Emergency Fuel: MIL-T-5624, Aviation Turbine Fuels, grades JP-4 and JP-5.

Electrical:
Drip proof generator enclosure. Capable of parallel operation. Fungus and moisture treatment. Solid state voltage regulator. Brushless rotary exciter.

Voltage Connection:

60 Hz:	120/208 V, 3 phase, 4 wire.	240/416 V, 3 phase, 4 wire.
50 Hz:	120/208 V, 3 phase, 4 wire.	240/416 V, 3 phase, 4 wire.

Source: https://assist.dla.mil -- Downloaded: 2016-12-11T08:39Z
Check the source to verify that this is the current version before use.

Protective Devices: Short circuit protection. Overvoltage protection. Overload protection. Reverse power protection. Low oil pressure cut-off switch. High temperature cut-off switch. Low fuel level cut-off switch. Overspeed cut-off switch.

Instrumentation: Voltmeter. Frequency meter. Ammeter. Hourmeter. Wattmeter (% load). Oil pressure gage. Battery charging ammeter (% current). Fault indicating system. Coolant temperature indicator. Fuel level.

FUNCTIONAL/OPERATIONAL CHARACTERISTICS

Reliability: Mean Time Between Failures (MTBF): 500 hours (specified).

Fuel Consumption: 6 gph at rated load.

Electromagnetic Interference: Suppression to MIL-STD-461 limits.

	Voltage	Frequency
Steady State Stability (variation)		
Short Term (30 see)	2% Bandwidth	2% Bandwidth
Long Term (4 hours)	4% Bandwidth	3% Bandwidth
Transient Performance		
Application of rated load	20% Dip	3% Undershoot
recovery	3 Sec	3 Sec
Rejection of rated load	20% Rise	4% Overshoot
recovery	3 Sec	3 Sec
Application of simulated motor load	40% Dip	
recovery	5 Sec	
Waveform		
Maximum Deviation Factor	5%	
Individual Harmonic	2%	
Regulation	3%	2-3% (Adjustable)

Adjustment Range for Standard Voltage Connections

120/208 v Corm:	60 Hz:	197 to 240 V.	50 Hz:	190 tO 213 v.
240/416 V Corm:	60 Hz:	395 to 480 V.	50 Hz:	380 to 425 V.

Frequency Adjustment Range: 58 to 62 Hz. 48 to 52 Hz.

Source: https://assist.dla.mil -- Downloaded: 2016-12-11T08:39Z
Check the source to verify that this is the current version before use.

ENVIRONMENTAL DATA

Power Output at Environmental Conditions:

60 kW, 60 Hz, Sea Level: Minus 25° F (-31.7° C) to plus 125° F (+51.7° C)
60 kW, 60 Hz, 5000 feet: Minus 25° F (-31.7° C) to plus 107° F (+41.7° C)
50 kW, 50 Hz, Sea Level: Minus 25° F (-31.7° C) to plus 125° F (+51.7° C)
50 kW, 50 Hz, 5000 feet: Minus 25° F (-31.7° C) to plus 107° F (+41.7° C)
Winterization system extends lower temperature limit to minus 65° F (-53.9° C).

Shock and Rough Handling: 10 mph railroad impact; 12 inch end drop. Truck and trailer transportation.

Attitude: Operate with base level or inclined no more than 15 degrees from level.

Noise Level: 86 dbA @ 25 feet.

OPTIONAL EQUIPMENT

See 4.4.3 of MIL-STD-633 for additional information on optional equipment.

Description	NSN	Weight lbs (kg)	Effect on Dim (ins)
Wntzn Kit (Fuel burning)	6115-00-407-8314	45 (20.4)	Int
Wntzn Kit (Electric)	6115-00-455-7693	40 (18.1)	Int
Wntzn Kit, Aux, Fuel burning	6115-00-463-9098	350 (158.8)	Aux: (41x40x26)
Wntzn Kit, Aux, Elect.	6115-00-463-9099	260 (117.9)	Aux: (36x27x19)
Remote Control Box	6115-00-420-8490	8 (3.6)	Int
Load Bank	6115-00-407-8322	272 (123.4)	Ext: H+15
Wheel Mounting Kit	6115-00-463-9092	564 (255.8)	Ext: L+8,W+32,H+9
Panel, Auto, Load Transfer, 60 Hz	6115-00-477-7932	825 (374.2)	Aux: (44x19x42)
Paralleling Cable	6140-00-197-4934	4 (1.8)	Ext: (L=25 ft)
Relay Assembly, Precise	6115-00-276-7622		Int

REFERENCE DOCUMENTS

Technical Manuals:

Army	Air Force	Marine Corps	Navy
TM	TO		NAVFAC
5-6115-545-12	35C2-3-444-1	TM-00038G-12	P-8-626-12
5-6115-545-34	35C2-3-444-2	TM-00038G-35	P-8-626-34
5-6115-545-24P	35C2-3-444-4	SL-00038G	P-8-626-24P
LO			
5-6115-545-12			

Source: https://assist.dla.mil -- Downloaded: 2016-12-11T08:39Z
Check the source to verify that this is the current version before use.

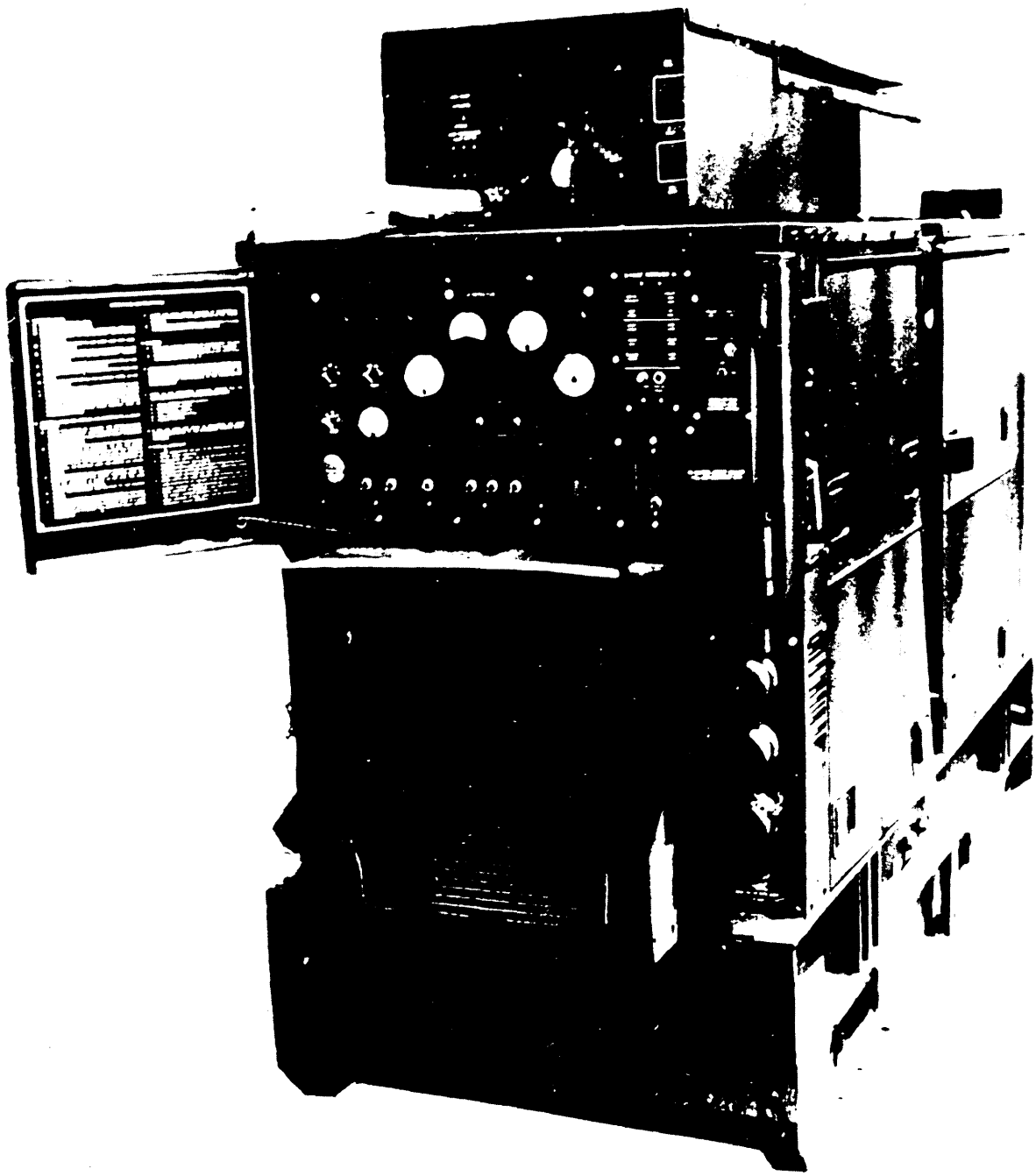

FIGURE 35. MEP-006A (60 kW, 50/60 Hz, DED).

X-3569

Source: https://assist.dla.mil -- Downloaded: 2016-12-11T08:39Z
Check the source to verify that this is the current version before use.

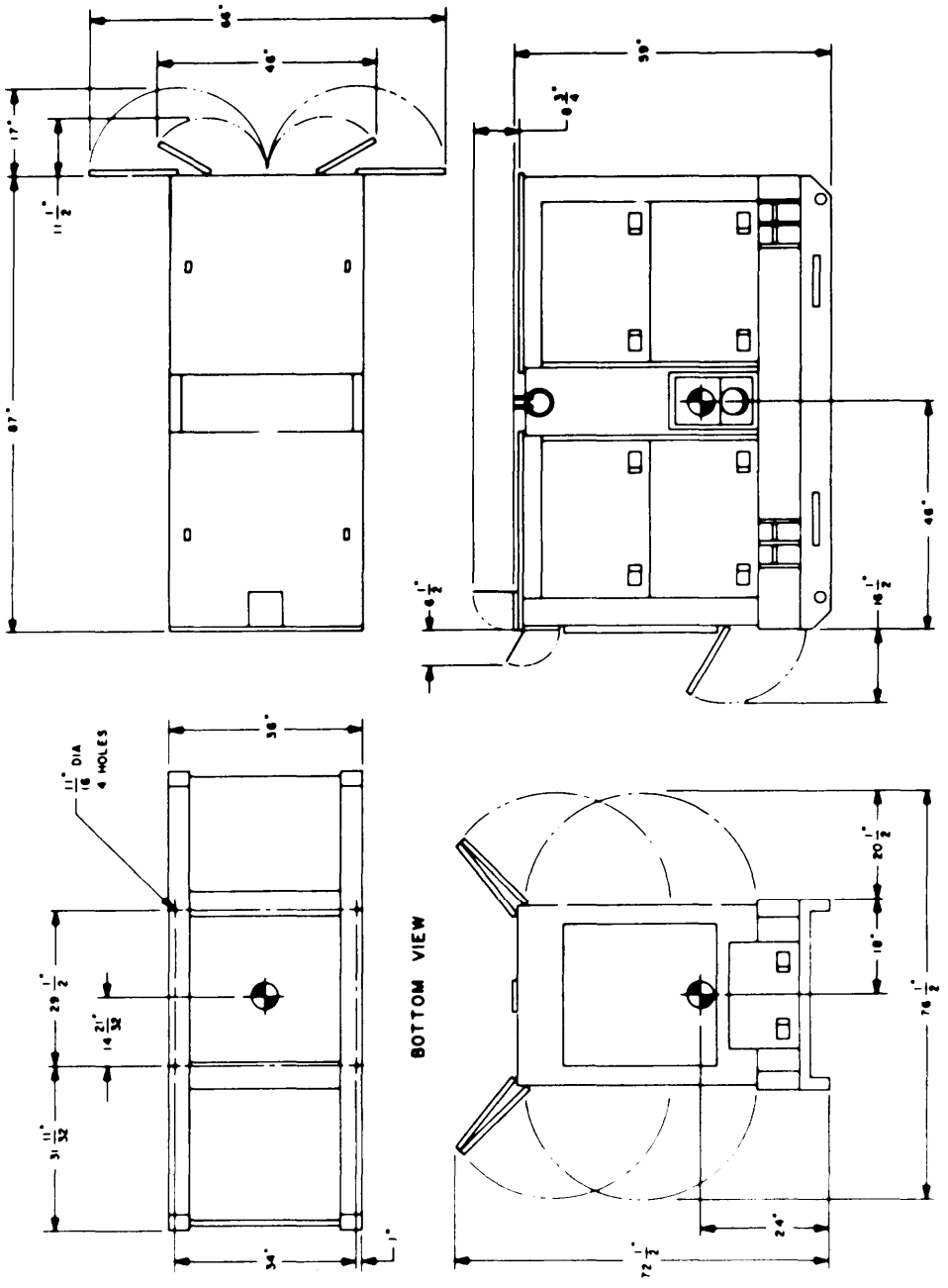

X-3570

FIGURE 36. MEP-006A (60 kW, 50/60 Hz, DED).

Source: https://assist.dla.mil -- Downloaded: 2016-12-11T08:39Z
Check the source to verify that this is the current version before use.

MILITARY STANDARD
MOBILE ELECTRIC POWER
ENGINE GENERATOR STANDARD FAMILY
MEP-105A, 60 kW, 50-60 Hz, DIESEL ENGINE-DRIVEN GENERATOR SET
CHARACTERISTICS DATA SHEET

CLASSIFICATION

Description: 60 kW @ 0.8 power factor, 50/60 Hz, 120/208 v, 240/416 v.

Model:	MEP-105A	Type:	I (tactical)
NSN:	6115-00-118-1252	Class:	1 (precise)
Spec:	MIL-G-52884/7	Mode:	I (50/60 Hz)

PHYSICAL CHARACTERISTICS

Dimensions: See figures 37 and 38 on pages 130 and 131.

Weight: 4300 lbs (1950 kg).

Mobility: Fully housed. Mounted on skid base. Lifting and tie-down attachments provided. Fork lift provision.

Engine; Diesel. Std: MIL-STD-1410. Horsepower: 167 @ 1800 RPM. No. of Cyl: 6. Cycle: 4. Liquid cooled. 24 VDC electric start. Operating speed: 50 Hz: 1500 RPM, 60 Hz: 1800 RPM. Fuel tank capacity: 55 gallons (approx 8 hours at rated load). Fuel pump lift: 12 feet.

Fuel:
Primary: VV-F-800; Diesel Fuel Oil, types DF-1, DF-2 and DF-A.
Emergency Fuel: MIL-T-5624, Aviation Turbine Fuels, grades JP-4 and JP-5.

Electrical:
Drip proof generator enclosure. Capable of parallel operation. Fungus and moisture treatment. Solid state voltage regulator. Brushless rotary exciter.

Voltage Connection:
60 Hz: 120/208 V, 3 phase, 4 wire. 240/416 V, 3 phase, 4 wire.
50 Hz: 120/208 V, 3 phase, 4 wire. 240/416 V, 3 phase, 4 wire.

Source: https://assist.dla.mil -- Downloaded: 2016-12-11T08:39Z
Check the source to verify that this is the current version before use.

Protective Devices: Short circuit protection. Overvoltage protection. Overload protection. Reverse power protection. Low oil pressure cut-off switch. High temperature cut-off switch. Low fuel level cut-off switch. Overspeed cut-off switch.

Instrumentation: Voltmeter. Frequency meter. Ammeter. Hourmeter. Wattmeier (% load). Oil pressure gage. Battery charging ammeter (% current). Fault indicating system. Coolant temperature indicator. Fuel level.

FUNCTIONAL/OPERATIONAL CHARACTERISTICS

Reliability: Mean Time Between Failure (MTBF) 120 hours (specified).

Fuel Consumption: 6 gph at rated load.

Electromagnetic Interference: Suppression to MIL-STD-461 limits.

	Voltage	Frequency
Steady State Stability (variation)		
Short Term (30 see)	1% Bandwidth	0.5% Bandwidth
Long Term (4 hours)	2% Bandwidth	1% Bandwidth
Transient Performance		
Application of rated load	15% Dip	1.5% Undershoot
recovery	0.5 Sec	1 Sec
Rejection of rated load	15% Rise	1.5% Overshoot
recovery	0.5 Sec	1 Sec
Application of simulated motor load	30% Dip	
recovery	0.7 Sec	
Waveform		
Maximum Deviation Factor	5%	
Individual Harmonic	2%	
Regulation	1%	0.25%

Adjustment Range for Standard Voltage Connections:

120/208 V Corm:	60 Hz:	197 to 240 V.	50 Hz:	190 tO 213 v.
240/416 V Corm:	60 Hz:	395 to 480 V.	50 Hz:	380 to 426 V.

Frequency Adjustment Range: 58 to 62 Hz. 48 to 52 Hz.

Source: https://assist.dla.mil -- Downloaded: 2016-12-11T08:39Z
Check the source to verify that this is the current version before use.

ENVIRONMENTAL DATA

Power Output at Environmental Conditions:

60 kW, 60 Hz, Sea Level: Minus 25° F (-31.7° C) to plus 125° F (+51.7° C)
60 kW, 60 Hz, 5000 feet: Minus 25° F (-31.7° C) to plus 107° F (+41.7° C)
50 kW, 50 Hz, Sea Level: Minus 25° F (-31.7° C) to PIUS 125° F (+51.7° C)
50 kW, 50 Hz, 5000 feet: Minus 25° F (-31.7° C) to plus 107° F (+41.7° C)
Winterization system extends lower temperature limit to minus 65° F (-53.9° C).

Shock and Rough Handling: 10 mph railroad impact. 12 inch end drop. Truck and trailer transporation.

Attitude: Operate with base level or inclined no more than 15 degrees from level.

Noise Level: 86 dbA @ 25 feet.

OPTIONAL EQUIPMENT

See 4.4.3 of MIL-STD-633 for additional information on optional equipment.

Description	NSN	Weight lbs (kg)	Effect on Dim (ins)
Wntzn Kit (Fuel burning)	6115-00-407-8314	45 (20.4)	Int
Wntzn Kit (Electric)	6115-00-455-7693	40 (18.1)	Int
Wntzn Kit, Aux, Fuel burning	6115-00-463-9098	350 (158.8)	Aux: (41x40x26)
Wntzn Kit, Aux, Elect.	6115-00-463-9099	260 (117.9)	Aux: (36x27x19)
Remote Control Box	6115-00-420-8490	8 (3.6)	Int
Load Bank	6115-00-407-8322	272 (123.4)	Ext: H+15
Wheel Mounting Kit	6115-00-463-9092	564 (255.8)	Ext: L+8,W+32,H+9
Panel, Auto, Load Transfer, 60 Hz	6115-00-477-7932	825 (374.2)	Aux: (44x19x42)

REFERENCE DOCUMENTS

Technical Manuals:

Army	Air Force	Marine Corps	Navy
TM	TO		NAVFAC
5-6115-545-12	35C2-3-444-1	TM-00038G-12	P-8-626-12
5-6115-545-34	35C2-3-444-2	TM-00038G-35	P-8-626-34
5-6115-545-24P	35C2-3-444-4	SL-00038G	P-8-626-24P
LO			
5-6115-545-12			

Source: https://assist.dla.mil -- Downloaded: 2016-12-11T08:39Z
Check the source to verify that this is the current version before use.

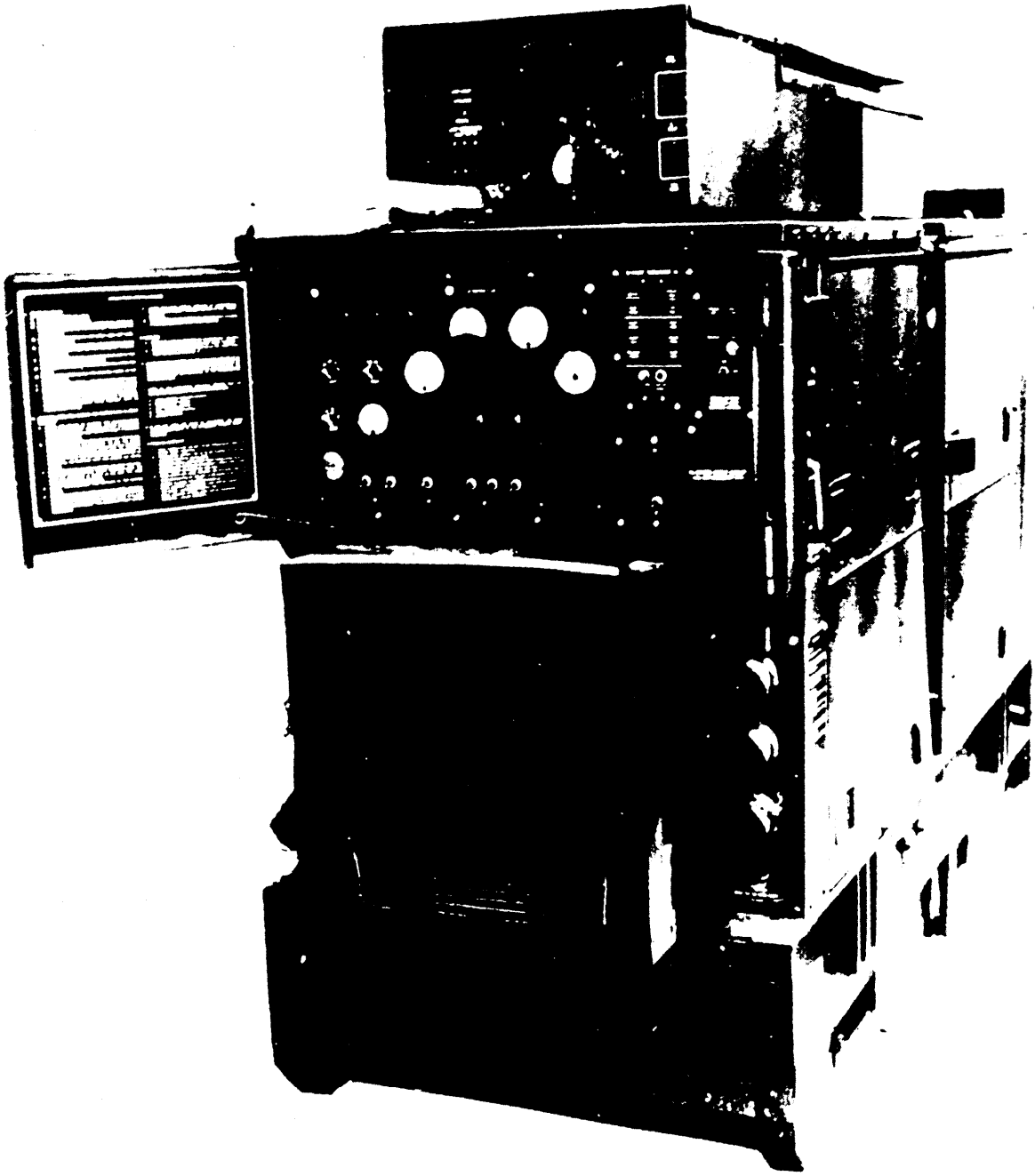

FIGURE 37. MEP-105A(60 kw, 50/60 Hz, DED).

Source: https://assist.dla.mil -- Downloaded: 2016-12-11T08:39Z
Check the source to verify that this is the current version before use.

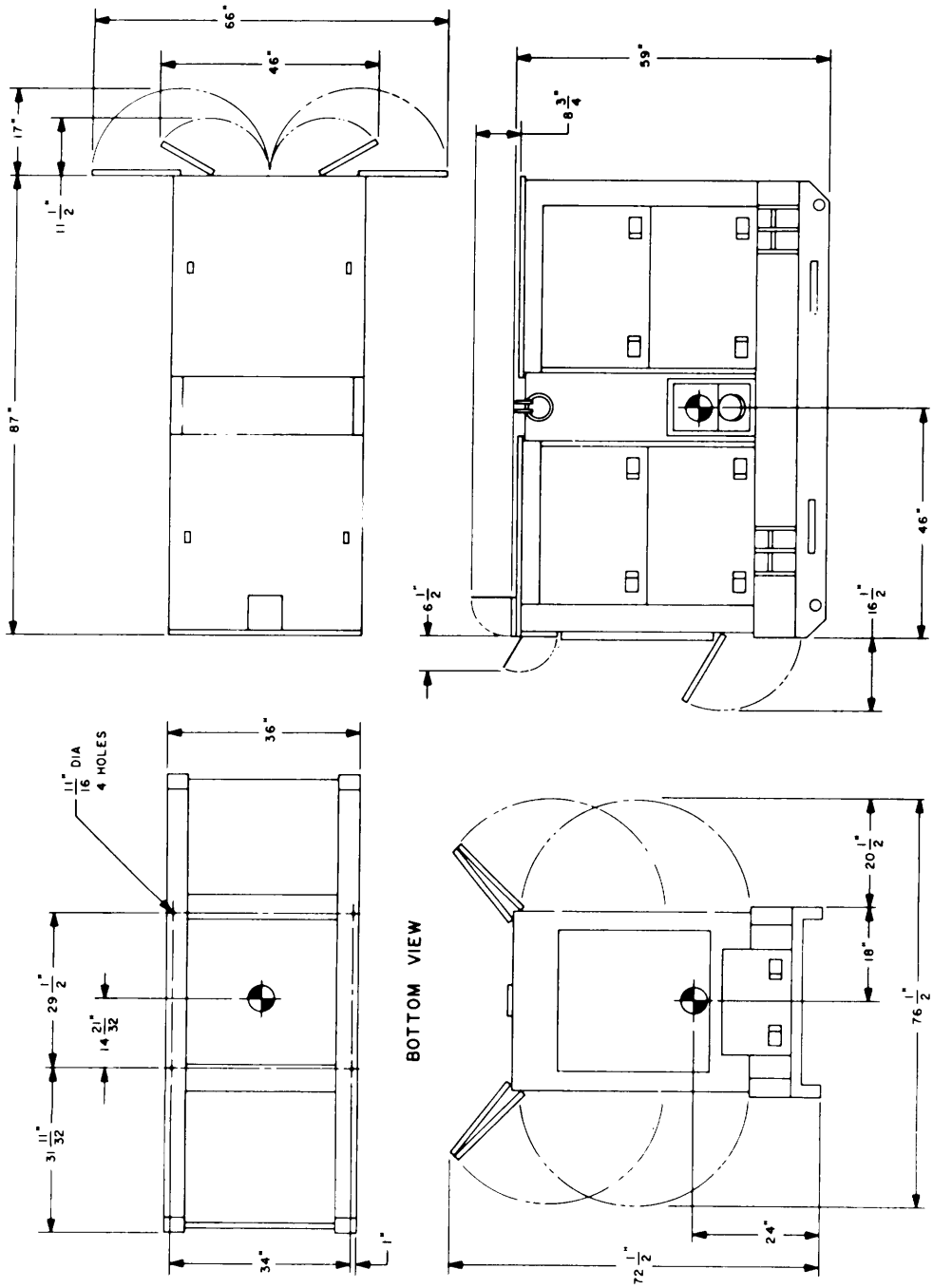

FIGURE 38. MEP-105A (60 kW, 50/60 Hz, DED).

X-3572

Source: https://assist.dla.mil -- Downloaded: 2016-12-11T08:39Z
Check the source to verify that this is the current version before use.

MILITARY STANDARD
MOBILE ELECTRIC POWER
ENGINE GENERATOR STANDARD FAMILY
MEP-115A, 60 kW, 400 Hz, DIESEL ENGINE-DRIVEN GENERATOR SET
CHARACTERISTICS DATA SHEET

CLASSIFICATION

Description: 60 kW @ 0.8 power factor, 400 Hz, 120/208 V, 240/416 V

Model:	MEP-115A	Type:	I (tactical)
NSN:	6115-00-118-1253	Class:	1 (precise)
Spec:	MIL-G-52884/9	Mode:	II (400 Hz)

PHYSICAL CHARACTERISTICS

Dimensions: See Figures 39 and 40 on pages 135 and 136.

Weight: 4400 lbs (1996 kg).

Mobility: Fully housed. Mounted on skid base. lifting and tie-down attachments provided. Fork lift provision.

Engine: Diesel. Std: MIL-STD-1410. Horsepower: 180 @ 2000 RPM. of cyl: 6. Cycle: 4. Liquid cooled. 24 VDC electric start. Operating speed: 400 Hz: 2000 RPM. Fuel tank capacity: 55 gallons (approx 8 hours at rated load). Fuel pump lift: 12 feet.

Fuel:
Primary: VV-F-800; Diesel Fuel Oil, types DF-1, DF-2 and DF-A.
Emergency Fuel: MIL-T-5624, Aviation Turbine Fuels, grades JP-4 and JP-5.

Electrical:
Drip proof generator enclosure. Capable of parallel operation. Fungus and moisture treatment. Solid state voltage regulator. Brushless rotary exciter.

Voltage Connection: 400 Hz: 120/208 V, 3 phase, 4 wire.
240/416 V, 3 phase, 4 wire.

Source: https://assist.dla.mil -- Downloaded: 2016-12-11T08:39Z
Check the source to verify that this is the current version before use.

Protective Devices: Short circuit protection. Overvoltage protection. Overload protection. Reverse power protection. Low oil pressure cut-off switch. High temperature cut-off switch. Low fuel level cut-off switch. Overspeed cut-off switch.

Instrumentation: Voltmeter. Frequency meter. Ammeter. Hourmeter. Wattmeter (% load). Oil pressure gage. Battery charging ammeter (% current). Fault indicating system. Coolant temperature indicator. Fuel level.

FUNCTIONAL/OPERATIONAL CHARACTERISTICS

Reliability: Mean Time Between Failures (MTBF): 450 hours (specified).

Fuel Consumption: 6 gph at rated load.

Electromagnetic Interference: Suppression to MIL-STD-461 limits.

	Voltage	Frequency
Steady State Stability (variation)		
Short Term (30 see)	1% Bandwidth	0.5% Bandwidth
Long Term (4 hours)	2% Bandwidth	1% Bandwidth
Transient Performance:		
Application of rated load	12% Dip	1.5% Undershoot
recovery	0.5 Sec	1 Sec
Rejection of rated load	12% Rise	1.5% Overshoot
recovery	0.5 Sec	1 Sec
Application of simulated. motor load	25% Dip	
recovery	0.7 Sec	
Waveform		
Maximum Deviation Factor	5%	
Individual Harmonic	2%	
Regulation	1%	0.25%

Adjustment Range for Standard Voltage Connections

120/208 v Corm:	400 Hz:	197 to 229 V.
240/416 V Corm:	400 Hz:	395 to 458 v.

Frequency Adjustment Range: 390 to 420 Hz.

Source: https://assist.dla.mil -- Downloaded: 2016-12-11T08:39Z
Check the source to verify that this is the current version before use.

ENVIRONMENTAL DATA

Power Output at Environmental Conditions:

60 kW, 400 Hz, Sea Level: Minus 25° F (-31.7 C) to plus 125° F (+51.7° C)
60 kW, 400 Hz, 5000 feet: Minus 25° F (-31.7° C) to plus 107° F (+41.7° C)
Winterization system extends lower temperature limit to minus 65° F (-53.9° C)

Shock and Rough Handling: 10 mph railroad impact. 12 inch end drop. Truck and trailer tranportation.

Attitude: Operate with base level or inclined no more than 15 degrees from level.

Noise Level: 90 dbA @ 25 feet.

OPTIONAL EQUIPMENT

See 4.4.3 of MIL-STD-633 for additional information on optional equipment.

Description	NSN	Weight lbs (kg)	Effect on Dim (ins)
Wntzn Kit (Fuel burning)	6115-00-407-8314	45 (20.4)	Int
Wntzn Kit (Electric)	6115-00-455-7693	40 (18.1)	Int
Wntzn Kit, Aux, Fuel burning	6115-00-463-9098	350 (158.8)	Aux: (41x40x26)
Wntzn Kit, Aux, Elect.	6115-00-463-9099	260 (117.9)	Aux: (36x27x19)
Remote Control Box	6115-00-420-8490	8 (3.6)	Int
Load Bank	6115-00-407-8322	272 (123.4)	Ext: H+15
Wheel Mounting Kit	6115-00-463-9092	564 (255.8)	Ext: L+8,W+32,H+9
Panel, Auto Standby, 400 Hz	6115-00-463-9096	825 (374.2)	Aux: (44x19x42)

REFERENCE DOCUMENTS

Technical Manuals:

Army	Air Force	Marine Corps	Navy
TM	To		NAVFAC
5-6115-545-12	35C2-3-444-l	TM-00038G-12	P-8-626-12
5-6115-545-34	35C2-3-444-2	TM-00038G-35	P-8-625-34
5-6115-545-24P	35C2-3-444-4	SL-00038G	P-8-626-24P
LO			
5-6115-545-12			

Source: https://assist.dla.mil -- Downloaded: 2016-12-11T08:39Z
Check the source to verify that this is the current version before use.

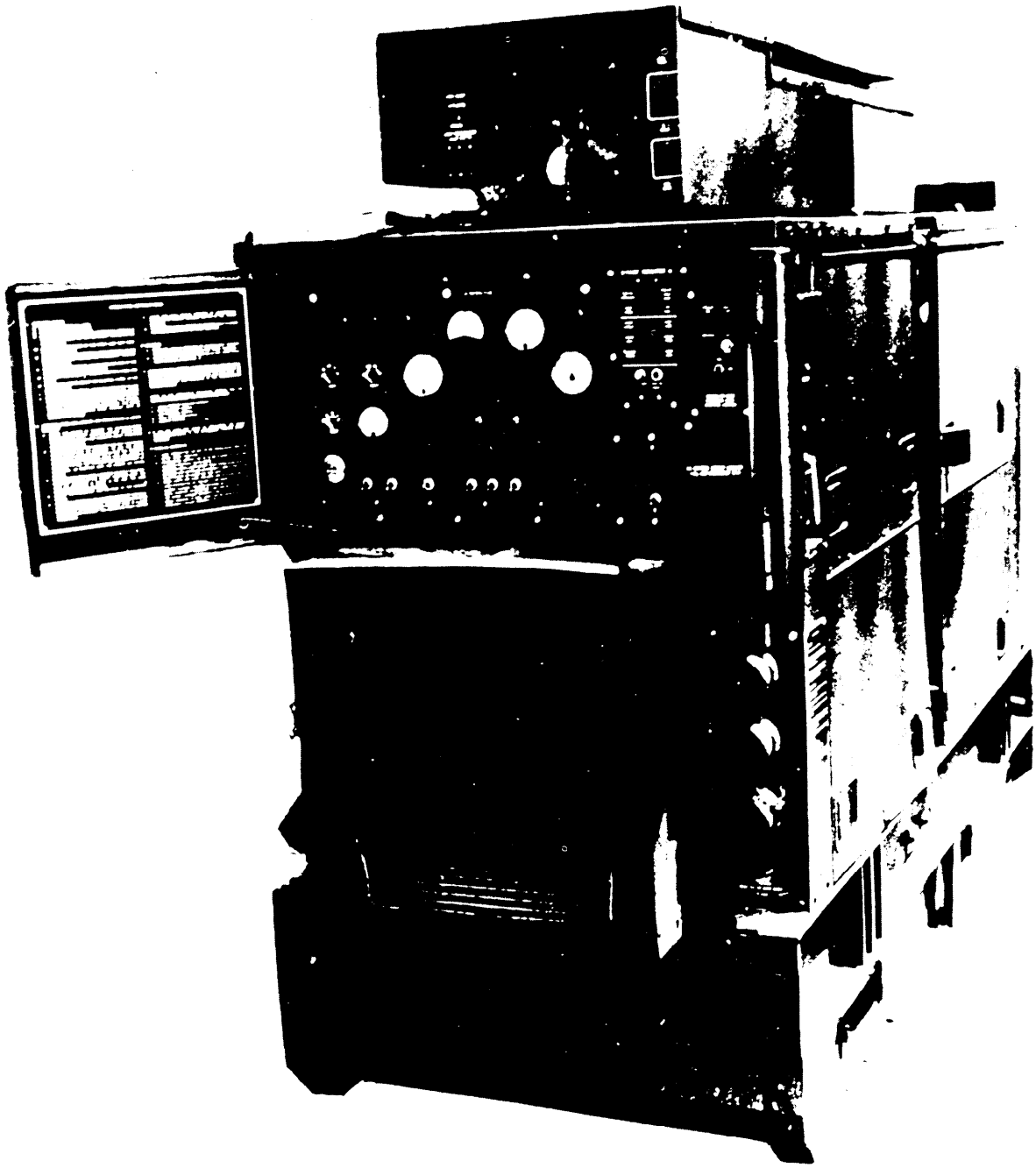

FIGURE 39. MEP-115A (60 kW, 400 Hz, DED).

X-3573

Source: https://assist.dla.mil -- Downloaded: 2016-12-11T08:39Z
Check the source to verify that this is the current version before use.

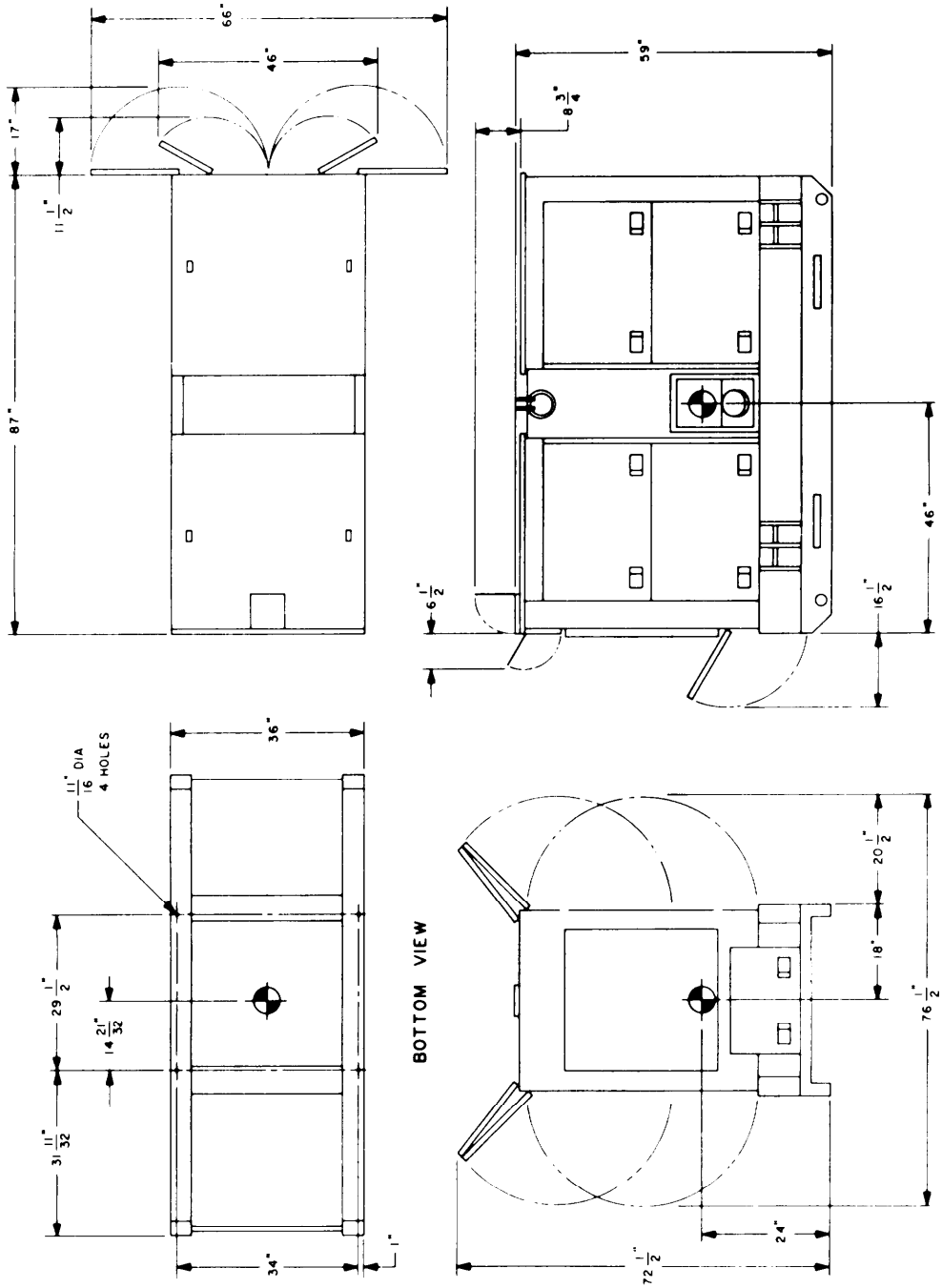

FIGURE 40. MEP-115A (60 kW, 400 Hz, DED).

X-3574

Source: https://assist.dla.mil -- Downloaded: 2016-12-11T08:39Z
Check the source to verify that this is the current version before use.

MILITARY STANDARD
MOBILE ELECTRIC POWER
ENGINE GENERATOR STANDARD FAMILY
MEP-404A, 60 kW, 400 Hz, GAS TURBINE ENGINE-DRIVEN GENERATOR SET
CHARACTERISTICS DATA SHEET

CLASSIFICATION

Description: Go kW @ 0.8 power factor, 400 Hz, 120/208 V, 240/416 V
Not type classified for Army use.

Model:	MEP-404A	Type:	I (tactical)
NSN:	6115-00-126-3024	Class:	1 (precise)
Spec:	MIL-G-83380	Mode:	II (400 Hz)

PHYSCIAL CHARACTERISTICS

Dimensions: See Figures 41 and 42 on pages 140 and 141.

Weight: 950 lbs (431 kg).

Mobility: Fully housed, mounted on skid base. Lifting and tie-down attachments provided. Forklift provisions.

Engine: Gas turbine. Horsepower: 90 @ 61,091 RPM. Air cooled. 24 VDC electric start. Operating speed: 61,091 RPM/with gear reduction to 6000. Internal fuel tank: 3 minutes operation. Fuel pump lift: 12 feet. Auxiliary fuel hose: 12 feet. Self cleaning engine air filter.

Fuel:
Primary: MIL-T-5624 Aviation Turbine Fuels, grades JP-4 and JP-5.
VV-F-800, Diesel Fuel Oil, types DF-1, DF-2 and DF-A and
MIL-F-16884, Marine Diesel Fuel Oil.
Emergency Fuel: MIL-G-3056 and VV-G-76 Automotive Gasolines and
MIL-G-5572 Aviation Gasolines, grades 80/87, 100/130 and
115/145.

Electrical Data: Fungus and moisture treatment. Solid state voltage regulator. Brushless rotary exciter. Nickel-Cadmium batteries. Capable of parallel operation. Remote control capability.

Source: https://assist.dla.mil -- Downloaded: 2016-12-11T08:39Z
Check the source to verify that this is the current version before use.

Voltage Connection: 120/208 V, 3 phase, 4 wire. 240/416 V, 3 phase, 4 wire.

Protective Devices: Short circuit protection. Overload. Reverse power protection. Under voltage protection. Over voltage protection. Under frequency protection. Engine overspeed and exhaust temperature protection. Low oil pressure cut-off switch. Low fuel (3 minutes operation). Malfunction indicator for each protective device.

Instrumentation: Voltmeter. Ammeter. Hourmeter. Frequency Meter. Wattmeter. Synchronization lights. Turbine exhaust gas temperature gage. Battery charging meter. Turbine speed indicator.

FUNCTIONAL/OPERATIONAL CHARACTERISTICS

Reliability: Mean Time Between Failures (MTBF): 1500 hours (specified).

Fuel Consumption: 17 gph at rated load.

Electromagnetic Interference: Suppressed to MIL-STD-461 limits.

	Voltage	Frequency
Steady State Stabiity (variation)		
Short Term (30 see)	0.5% Bandwidth	0.25% Bandwidth
Long Term (4 hours)	0.5% Bandwidth	0.25% Bandwidth
Transient Performance		
Application of rated load	15% Dip	1.5% Undershoot
recovery	0.1 Sec	1 Sec
Rejection of rated load	15% Rise	1.5% Overshoot
recovery	0.1 Sec	1 Sec
Application of simulated motor load	30% Dip	
recovery	0.15% Sec	
Waveform		
Maximum Deviation Factor	5%	
Individual Harmonic	1.5$	
Regulation	0975%	3% (Droop) 0.25% (Isochronous)

Adjustment Range for Standard Voltage Connections:

120/208 V Corm: 197 to 229 V.
240/416 V Corm: 395 to 458 V.

Adjustment Range for Frequency: 384 to 416 Hz.

Source: https://assist.dla.mil -- Downloaded: 2016-12-11T08:39Z
Check the source to verify that this is the current version before use.

ENVIRONMENTAL DATA

Power Output at Environmental Conditions

60 kW, 400 Hz, Sea Level:	Minus 65° F (-53.9° C) to plus 125° F (+51.7° C)
60 kW, 400 Hz, 5000 feet:	Minus 65° F (-53.9° C) to plus 107° F (+41.7° C)
54 kW, 400 Hz, 8000 feet:	Minus 65° F (-53.9° C) to plus 95° F (+35° C)

Shock and Rough Handling: 10 mph railroad impact. 18 inch drop. 18 inch end drop. Truck and trailer transportation.

Attitude: Operate with base level or inclined no more than 15 degrees from level.

Noise Level: 85 dbA @ 25 feet.

OPTIONAL EQUIPMENT

None.

REFERENCE DOCUMENTS

Technical Manuals:	TO 35C2-436-1	Turbine:	TO 2G-2G2T-13
	TO 35C2-436-3		TO 2G-2G2T-14
	TO 35C2-436-4		TO 2G-2G2T-16

Source: https://assist.dla.mil -- Downloaded: 2016-12-11T08:39Z
Check the source to verify that this is the current version before use.

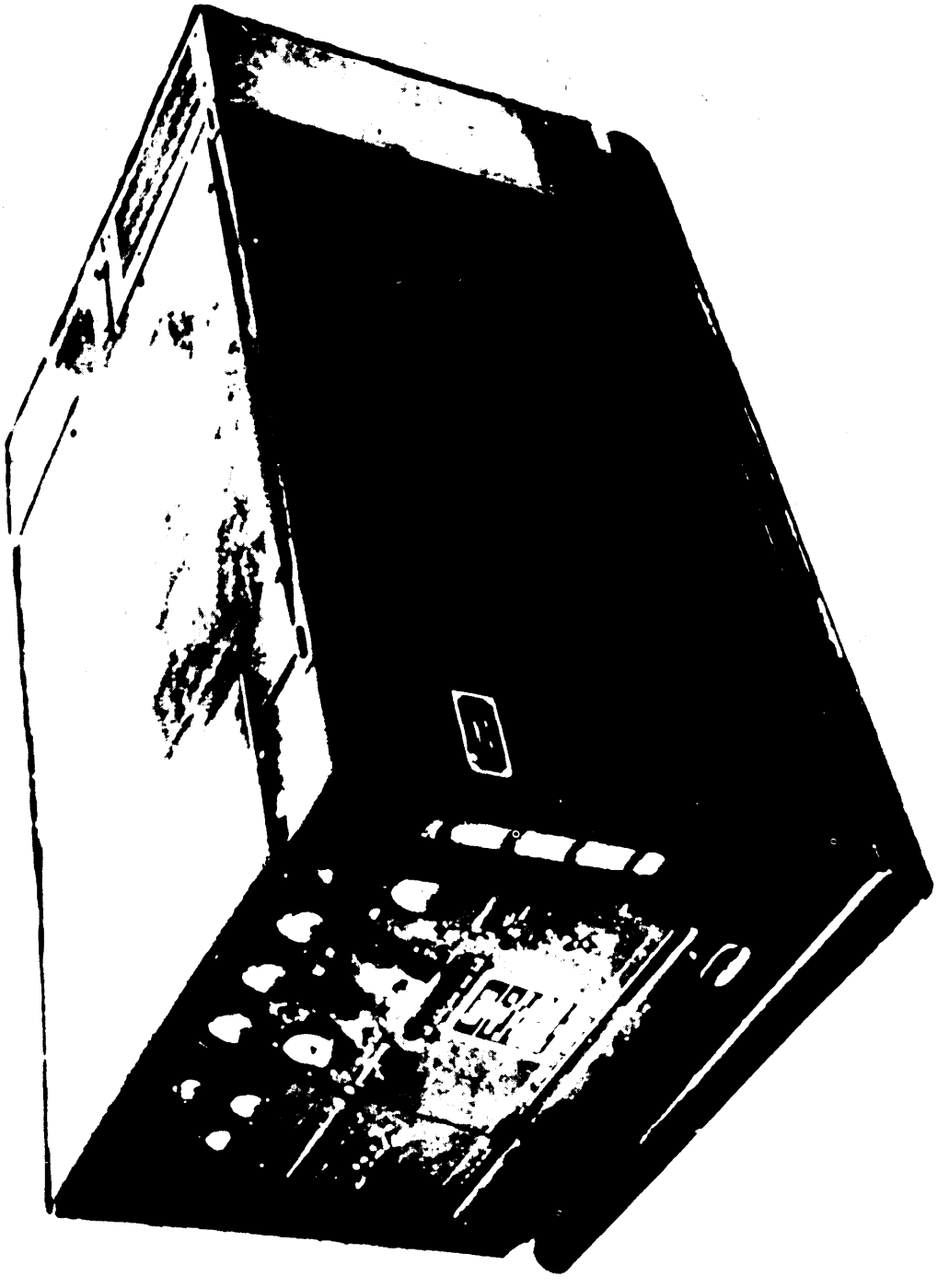

FIGURE 41. MEP-404A (60 kW, 400 Hz, GTED).

X-3575

Source: https://assist.dla.mil -- Downloaded: 2016-12-11T08:39Z
Check the source to verify that this is the current version before use.

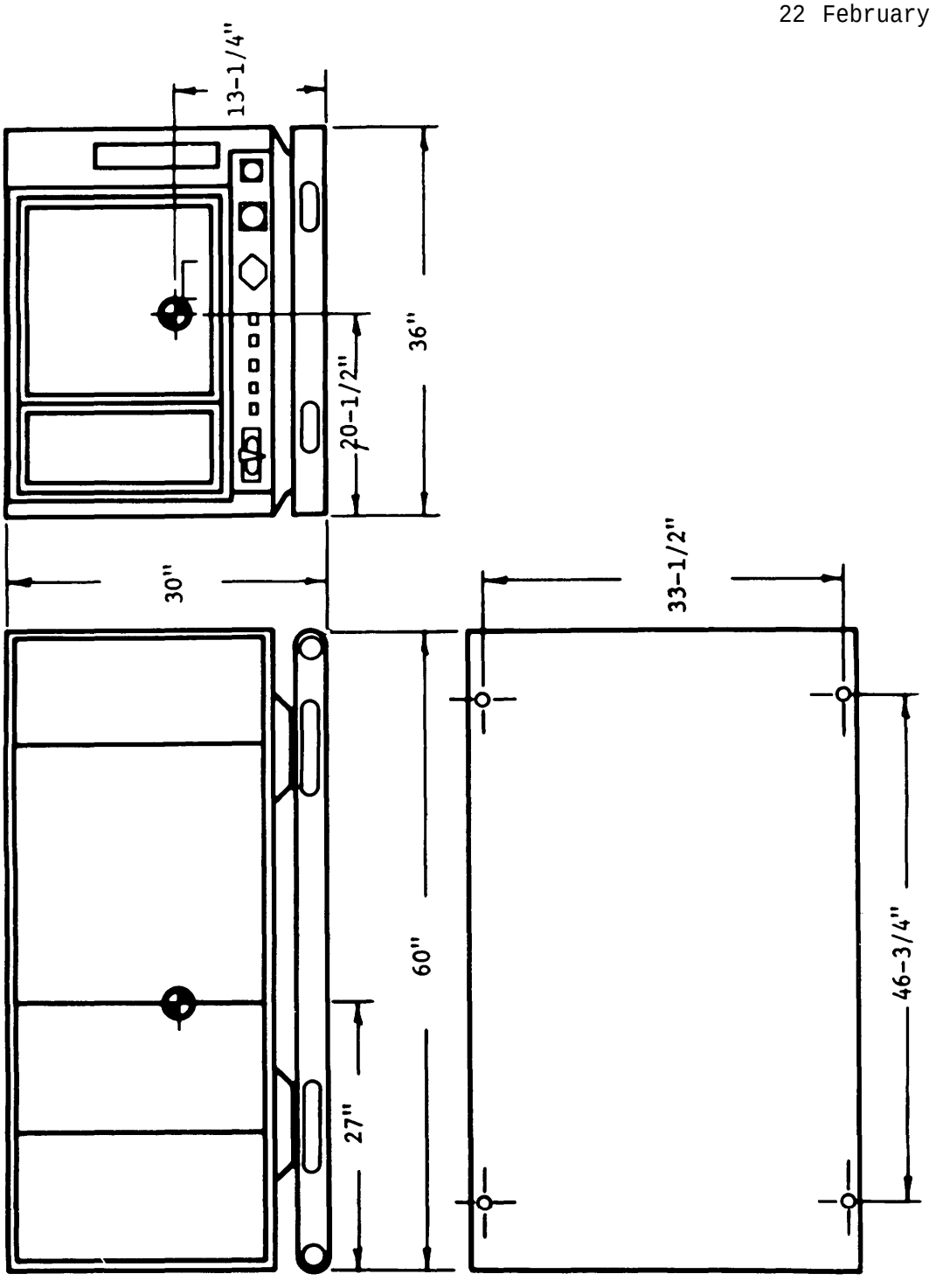

FIGURE 42. MEP-404A (60 kW, 400 Hz, GTED).

X-3576

Source: https://assist.dla.mil -- Downloaded: 2016-12-11T08:39Z
Check the source to verify that this is the current version before use.

MILITARY STANDARD
MOBILE ELECTRIC POWER
ENGINE GENERATOR STANDARD FAMILY
MEP-356A, 60 kW, 400 Hz, GAS TURBINE ENGINE-DRIVEN GENERATOR SET
CHARACTERISTICS DATA SHEET

CLASSIFICATION

Description: 60 kW @ 0.8 power factor, 400 Hz, 115/200 V, 28 VDC, bleed air. Aircraft ground support power unit. Not type classified for Army use.

Model:	MEP-356A	Type:	I (tactical)
NSN:	6115-00-420-8486	Class:	1 (precise)
Spec:	MIL-G-38195	Mode:	II (400 Hz)

PHYSICAL CHARACTERISTICS

Dimensions: 90 in x 67 in x 67 in. See Figures 43 and 44 on pages 145 and 146.

Weight: 2800 lbs (1270 kg).

Mobility: Fully housed. Mobile, electric self-propelled. Trailer mounted. Lifting and tie-down attachments provided.

Engine: Gas turbine. Horsepower: 177 @ 42,000 RPM. 24 VDC electric start. Operating speed: 400 Hz: 42,000 RPM. Fuel tank capacity: 190 gallons (approx 6.5 hours at average load). Fuel pump lift: 6 feet.

Fuel:
Primary: MIL-T-5624, Aviation Turbine Fuels, grades JP-4 and JP-5.

Separate AC,brushless rotary exciter.

Voltage Connection: 400 Hz: 115/200 V, 3 phase, 4 wire. DC: 28 v, 2 wire.

Protective Devices: Short circuit protection. AC overvoltage/undervoltage protection. AC underfrequency protection. Overspeed protection. Low oil pressure cut-off switch. High temperature control.

Instrumentation: AC Voltmeter. DC Voltmeter. Frequency meter. Hourmeter. Battery charging ammeter and voltmeter. Fuel level. Tachometer.

Source: https://assist.dla.mil -- Downloaded: 2016-12-11T08:39Z
Check the source to verify that this is the current version before use.

Reliability: Mean Time Between Failures (MTBF): 478 hours (specified).

Fuel Consumption: 33 gph at rated load. 41 gph with bleed air.

	Voltage	Frequency
Steady State Stability (variation)		
Short Term (30 see)	N/R	0.5% Bandwidth
Long Term (4 hours)	N/R	N/R
Transient Performance		
Application of rated load	25% Dip	1% Undershoot
recovery	0.25 Sec	0.4 Sec
Rejection of rated load	25% Rise	0.25% Overshoot
recovery	0.25 Sec	1.5 Sec
Application of simulated motor load	N/A	
recovery	N/A	
Waveform		
Maximum Deviation Factor	N/R	
Individual Harmonic	2%	

Adjustment Range for Standard Voltage Connections: N/A

Frequency Adjustment Range: 380 to 420 HZ.

DC Power: DC power used only for propulsion and utility. No DC power available for aircraft servicing.

Pneumatic (Bleed Air): Flow rate: 150 + 4 pounds per minute. Air pressure: 51± 2 psia. Delivery air temperature: 385° F (minimum).

ENVIRONMENTAL DATA

Power Output at Environmental Conditions:

Winterization system extends lower temperature limit to minus 65° F (-53.9° C).

Shock and Rough Handling: Vioration. 12 inch end drop.

Attitude: Operate with base level or inclined no more than 15 degrees from level.

Noise level: 93 dbA @ 25 feet (estimate).

Source: https://assist.dla.mil -- Downloaded: 2016-12-11T08:39Z
Check the source to verify that this is the current version before use.

Auxiliary Equipment: 28 VDC slave receptacle (AN 2552). Battery charging rectifier, 28 VDC and 400 Hz AC convenience receptacles. 60 foot MS25486 AC power output cable.

OPTIONAL EQUIPMENT

None.

REFERENCE DOCUMENTS

Technical Manuals:

Air Force
TO
35C2-3-372-11
35C2-3-13 (O.H)
35C2-3-14 (IPB)

Source: https://assist.dla.mil -- Downloaded: 2016-12-11T08:39Z
Check the source to verify that this is the current version before use.

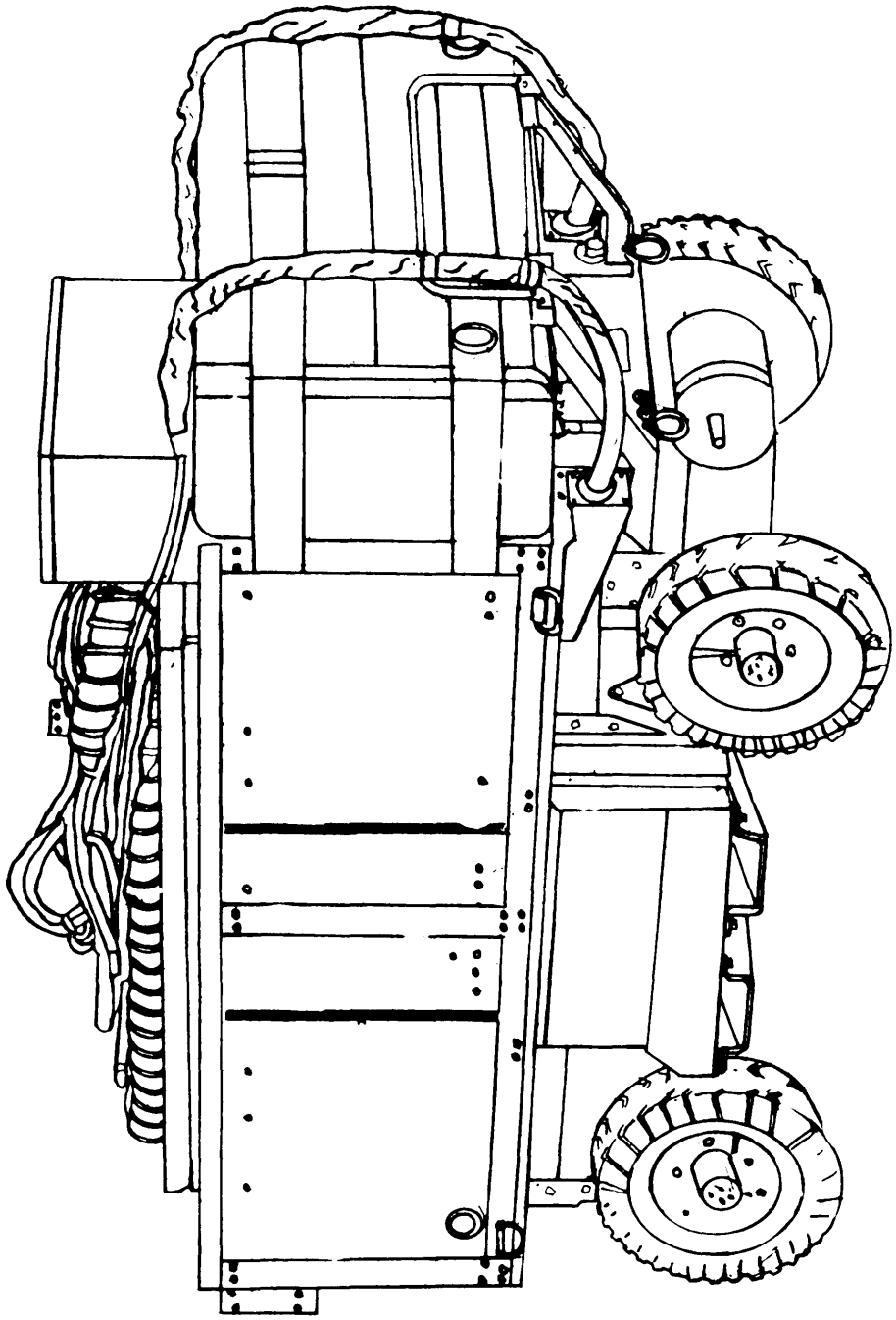

X-3519

FIGURE 43. MEP-356A (60 KW, 400 Hz, GTED).

Source: https://assist.dla.mil -- Downloaded: 2016-12-11T08:39Z
Check the source to verify that this is the current version before use.

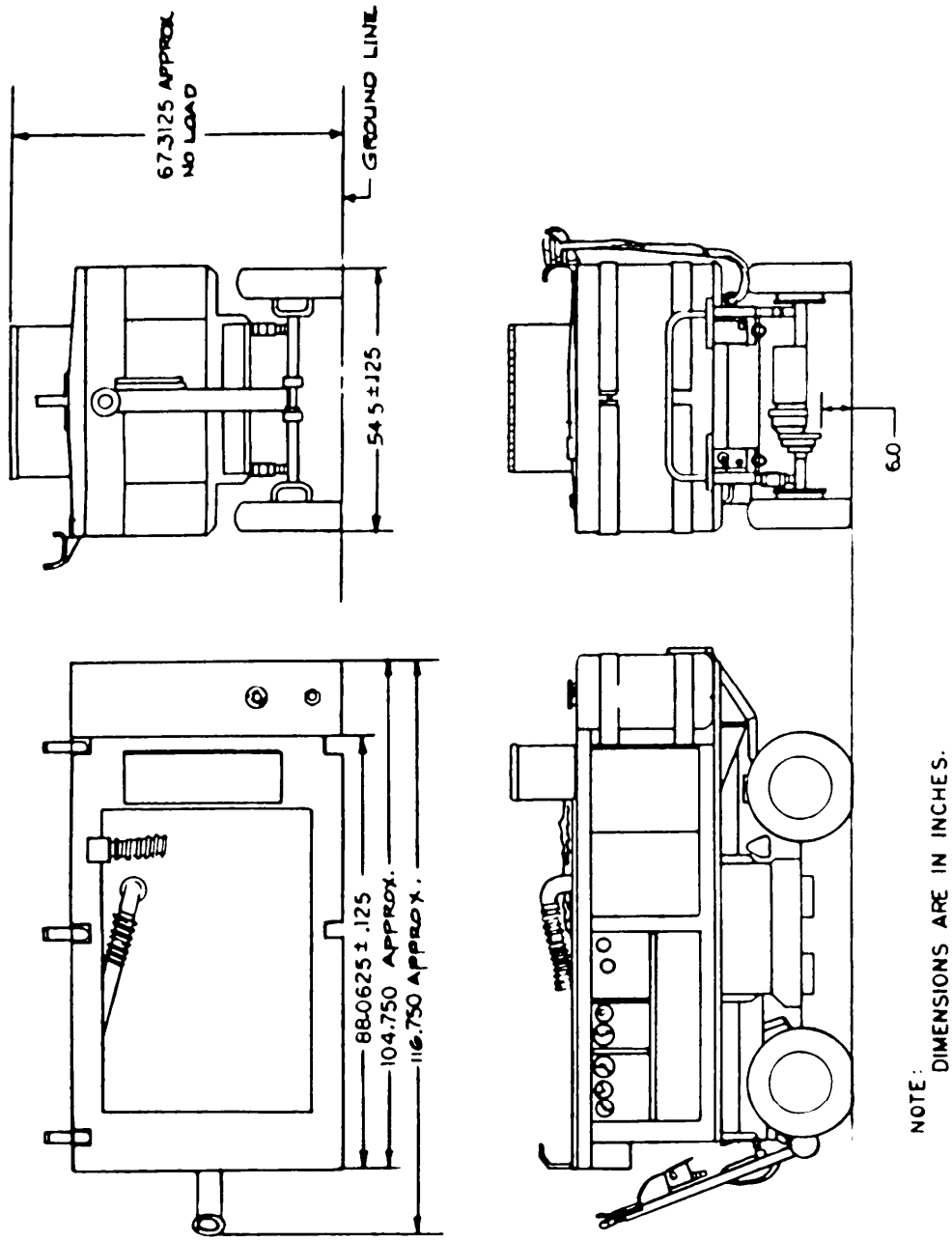

NOTE: DIMENSIONS ARE IN INCHES.

FIGURE 44. MEP-356 (60 kW, 400 Hz, GTED).

X-3515A

Source: https://assist.dla.mil -- Downloaded: 2016-12-11T08:39Z
Check the source to verify that this is the current version before use.

MILTARY STANDARD
MOBILE ELECTRIC POWER
ENGINE GENERATOR STANDARD FAMILY
MEP-357A, 72 kW, 400 Hz, 21 kW, DC DIESEL ENGINE-DRIVEN GENERATOR SET
CHARACTERISTICS DATA SHEET

CLASSIFICATION

Description: 72 kw @ 0.8 power factor, 400 Hz, 115/200 V. 21 kW, 28 VDC. Aircraft ground support power unit. Not type classified for Army use.

Model:	MEP-357A	Type:	I (tactical)
NSN:	6115-00-110-1859	Class:	1 (precise)
Spec:	PD 328AS100	Mode:	II (400 Hz)/IV (DC)

PHYSICAL CHARACTERISTICS

Dimensions: See Figures 45 and 46 on pages 150 and 151.

Weight: 7000 lbs (3175 kg).

Mobilty: Fully enclosed. Integral trailer mounted. Lifting and tie-down attachments provided.

Engine: Diesel. Std: MIL-STD-1410. Horsepower: 215 5 1846 RPM. No. of cyl: 6. 2. Liquid cooled. 24 VDC electric start. Operating speed: 1846 RPM. Fuel tank capacity: 30 gallons (approx 4 hours at rated load). Fuel pump lift: 1 foot.

Fuel:
Primary: VV-F-800; Diesel Fuel Oil, types DF-1, DF-2 and DF-A, and MIL-F-16884 Marine diesel fuel oil.
Emergency Fuel: MIL-T-5624, Aviation Turbine Fuel, grade JP-5.

Electrical:
Drip proof generator enclosure. Fungus and moisture treatment.
Solid state voltage regulator. Static exciter generator. DC power supply with 750 and 1000 ampere current limit.

Voltage Connection: 400 Hz: 115/200 V, 3 phase, 4 wire. DC: 28 V, 2 wire.

Source: https://assist.dla.mil -- Downloaded: 2016-12-11T08:39Z
Check the source to verify that this is the current version before use.

Protective Devices: Low fuel level. High coolant temperature. DC output overvoltage. AC output over/under voltage. Frequency output over/under. Engine overspeed. Low oil pressure. Fault indicator system for the above. Magnetic and thermal overload protection.

Instrumentation: AC and DC Voltmeters. Frequency meter. AC and DC Ammeters. Hourmeter. Oil pressure gage. Battery voltmeter. Fault indicating system. Coolant temperature gage. Fuel level. Tachometer.

FUNCTIONAL/OPERATIONAL CHARACTERISTICS

Reliability: Mean Time Between Failures (MTBF); 250 hours (specified).

Fuel Consumption: 6.7 gph at rated load.

Electromagnetic Interference: Suppression to MIL-STD-461 limits.

	DC Voltage	AC Voltage	Frequency
Steady State Stability (Variation)			
Short Term (30 See)	2% Bandwidth	1% Bandwidth	1% Bandwidth
Long Term (4 hours)	2% Bandwidth	1% Bandwidth	1% Bandwidth
Transient Performance			
Application of rated load	25% Dip	13% Dip	Not Rated
recovery	0.4 Sec	0.5 Sec	1 Sec
Rejection of rated load	25% Rise	13% Rise	Not Rated
recovery	0.4 Sec	0.5 Sec	1 Sec
Application of simulated motor load	Not Rated	Not Rated	
Waveform			
Maximum Deviation Factor		Not Rated	
Individual Harmonic		2%	
Voltage Ripple:	1.5 volts		
Regulation:	+0.5 VDC	1%	1%

Adjustment Range for Standard Voltage Connections

115/200 V Corm: 400 Hz: 105 to 125 V.
28 VDC Corm: 23 to 35 V.

Frequency Adjustment Range: 380 to 440 Hz.

Source: https://assist.dla.mil -- Downloaded: 2016-12-11T08:39Z
Check the source to verify that this is the current version before use.

ENVIRONMENTAL DATA

Power Output at Environmental Conditions:

60 kW, 400 Hz, Sea Level: Minus 25° F (-31.7° C) to plus 125° F (+51.7° C) Winterization system extends lower temperature limit to minus 65° F (-53.9° C).

Shock and Rough Handling: Drop. Vibration test.

Attitude: Operate with base level or inclined no more than 15 degrees from level.

Noise level: 87 dbA @ 25 feet.

AUXILIARY EQUIPMENT

24 VDC slave receptacle. 28 VDC and 400 Hz convenience receptacles. Two 30 foot MS90328-14 AC power output cables. Cold weather ether start injection system. Test jack for AN/USM-108 test set.

OPTIONAL EQUIPMENT

See 4.3.1 for information on fire extinguisher.

SPECIAL FEATURES

AC and DC power cable retracting reels. Mechanical parking brake. Running lights.

REFERENCE DOCUMENTS

Technical Manuals: Navy - NAVAIR 19-45-20

Source: https://assist.dla.mil -- Downloaded: 2016-12-11T08:39Z
Check the source to verify that this is the current version before use.

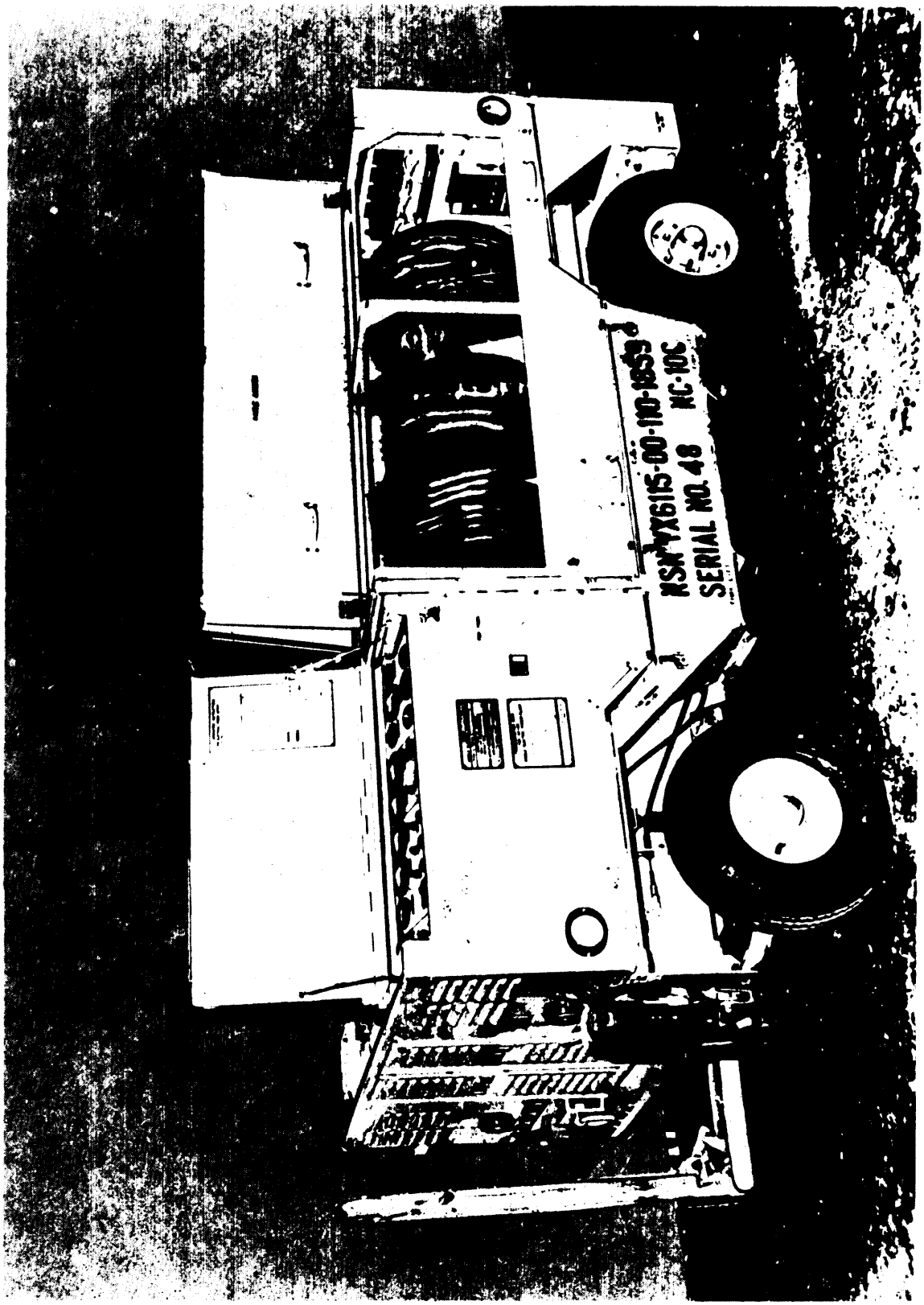

FIGURE 45. MEP-357A (72 kW, 400 Hz, DED).

X-3577

Source: https://assist.dla.mil -- Downloaded: 2016-12-11T08:39Z
Check the source to verify that this is the current version before use.

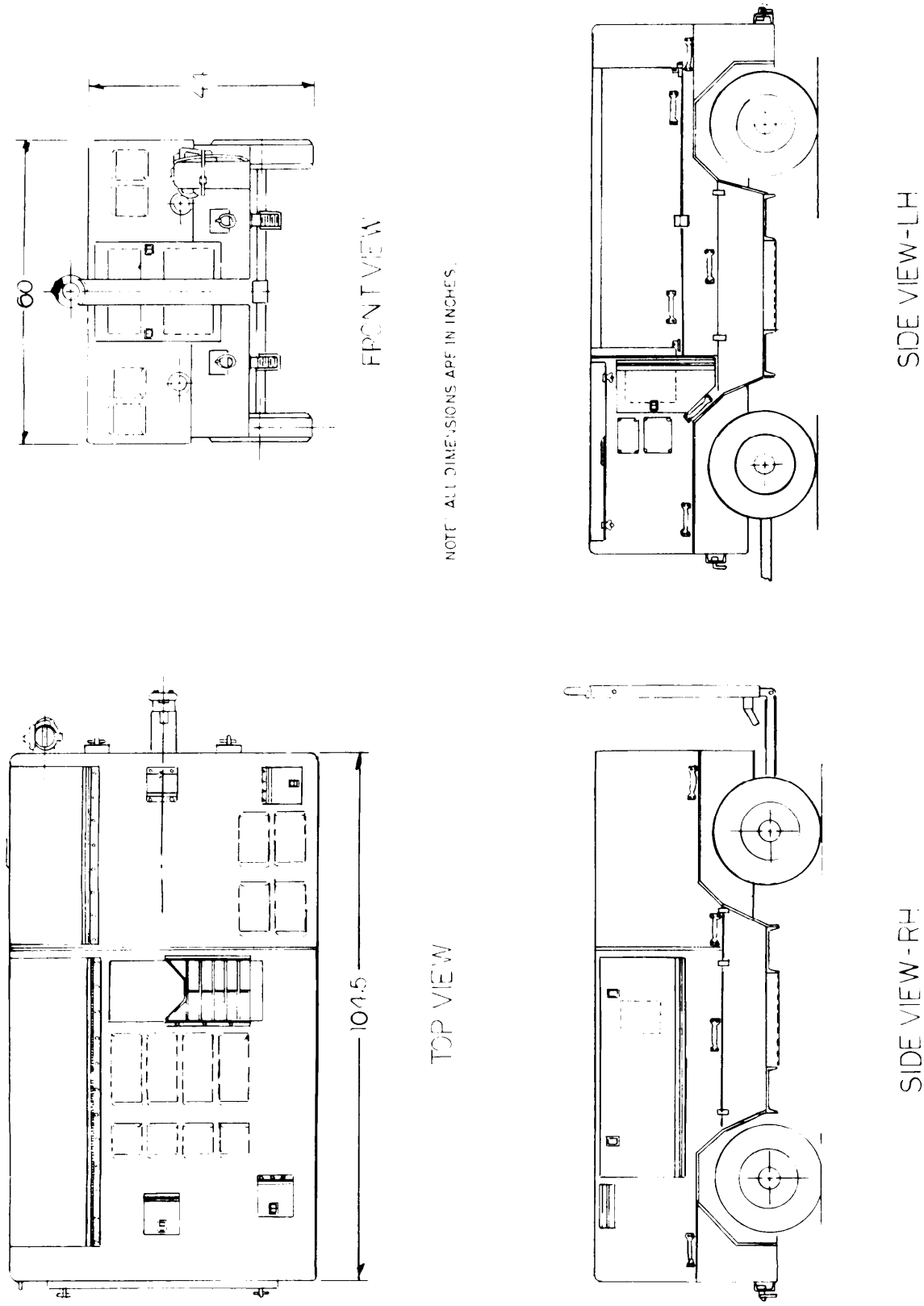

FIGURE 46. MEP-357A (72kW, 400Hz, DED).

Source: https://assist.dla.mil -- Downloaded: 2016-12-11T08:39Z
Check the source to verify that this is the current version before use.

MILITARY STANDARD
MOBILE ELECTRIC POWER
ENGINE GENERATOR STANDARD FAMILY
MEP-007B, 100 kW, 50-60 Hz, DIESEL ENGINE-DRIVEN GENERATOR SET
CHARACTERISTICS DATA SHEET

CLASSIFICATION

Description: 100 kW @ 0.8 power factor, 50/60 Hz, 120/208 V, 240/416 V

Model:	MEP-007B	Type:	I (tactical)
NSN:	6115-01-036-6374	Class:	
Spec:	PD, 17 Mar 78	Mode:	I (50/60 Hz)

PHYSICAL CHARACTERISTICS

Dimensions: See Figures 47 and 48 on pages 155 and 156.

Weight: 7000 lbs (3175 kg).

Mobility: Fully housed. Mounted on skid base. Lifting and tie-down attachments provided. Fork lift provision.

Engine: Diesel. Std:MIL-STD-1410. Horsepower: 217min @ 1800 RPM No. of cyl: 6. Cycle: Liquid cooled. 24 VDC electric start. Operating speed: 50 Hz: 1500 RPM, 60 Hz: 1800 RPM. Fuel tank capacity: 90 gallons (approx 8 hours at rated load). Fuel pump lift: 12 feet.

Fuel:

Primary: VV-F-800; Diesel Fuel Oil, types DF-1, DF-2 and DF-A.
Emergency Fuel: MIL-T-5624, Aviation Turbine Fuels, grades JP-4 and JP-5.

Electrical

Drip proof generator enclosure. Capable of parallel operation. Fungus and moisture treatment. Solid state voltage regulator. Brushless rotary exciter.

Voltage Connection:

60 Hz: 120/208 V, 3 phase, 4 wire. 240/416 V, 3 phase, 4 wire.
50 Hz: 120/208 V, 3 phase, 4 wire. 240/416 V, 3 phase, 4 wire.

Source: https://assist.dla.mil -- Downloaded: 2016-12-11T08:39Z
Check the source to verify that this is the current version before use.

Protective Devices: Short circuit protection. Overvoltage protection. Overload protection. Reverse power protection. Low oil pressure cut-off switch. High temperature cut-off switch. Low fuel level cut-off switch. Overspeed cut-off switch.

Instrumentation: Voltmeter. Frequency meter. Ammeter. Hourmeter. Wattmeter (% load). Oil pressure gage. Battery charging ammeter (% current). Fault indicating system. Coolant temperature indicator. Fuel level.

FUNCTIONAL/OPERATIONAL CHARACTERISTICS

Reliability: Mean Time Between Failures (MTBF): 580 hours (specified).

Fuel Consumption: 8.5 gph at rated load.

Electromagnetic Interference: Suppression to MIL-STD-461 limits.

	Voltage	Frequency
Steady State Stability (variation)		
Short Term (30 see)	1% Bandwidth	0.5% Bandwidth
Long Term (4 hours)	2% Bandwidth	1% Bandwidth
Transient Performance		
Application of rated load	15% Dip	*4% Undershoot
recovery	0.5 Sec	2 Sec
Rejection of rated load	15% Rise	*4% Overshoot
recovery	0.5 Sec	2 Sec
Application of simulated motor load	30% Dip	
recovery	0.7 Sec	
		*Frequency performance at 75% of rated load.
Waveform		
Maximum Deviation Factor	5%	
Individual Harmonic	2%	
Regulation	1%	0.3% adjustable

Adjustment Range for Standard Voltage Connections

120/208 V Corm: 60 Hz: 197 to 240 V. 50 Hz: 190 tO 213 v.
240/416 V Corm: 60 Hz: 395 to 480 V. 50 Hz: 380 to 426 V.

Frequency Adjustment Range: 58 to 62 Hz. 48 to 52 Hz.

Source: https://assist.dla.mil -- Downloaded: 2016-12-11T08:39Z
Check the source to verify that this is the current version before use.

ENVIRONMENTAL DATA

Power Output at Environmental Conditions:

100 kW, 60 Hz, Sea Level: Minus 25° F (-31.7° C) to plus 125° F (+51.7° C).
100 kW, 60 Hz, 5000 feet: Minus 25° F (-31.7° C) to plus 107° F (+41.7° C)
83.3 kW, 50 Hz, Sea Level: Minus 25° F (-31.7° C) to plus 125° F (+51.7° C)
83.3 kW, 50 Hz, 5000 feet: Minus 25° F (-31.7° C) to plus 107° F (+41.7° C)
Winterization system extends lower temperature limit to minus 65° F (-53.9° C).

Shock and Rough Handling: 10 mph railroad impact. 12 inch end drop. Truck and trailer transportation.

Attitude: Operate with base level or inclined no more than 15 degrees from level.

Noise Level: 85 dbA @ 25 feet.

OPTIONAL EQUIPMENT

See 4.4.3 of MIL-STD-633 for additional information on optional equipment.

Descrirption	NSN	Weight lbs (kg)	Effect on Dim (ins)
Wntzn Kit (Fuel burning)	To be determined		Int
Wntzn Kit (Electric)	To be determined		Int
Wntzn Kit, Aux, Fuel burning	6115-00-463-9098	350 (158.8)	Aux: (41x40x26)
Wntzn Kit, Aux, Elect	6115-00-463-9099	260 (117.9)	Aux: (36x27x19)
Remote Control Box	6115-00-420-8490	8 (3.6)	Int
Load Bank	6115-00-463-9086	370 (167.8)	Ext: H+19
Wheel Mounting Kit	6115-00-463-9089	580 (263)	Ext: H+13,L+9,W+30
Panel, Auto, Load Transfer, 60 Hz	6115-00-477-7932	825 (374.2)	Aux: (44X19X42)

REFERENCE DOCUMENTS

Technical Manuals: To be published.

Source: https://assist.dla.mil -- Downloaded: 2016-12-11T08:39Z
Check the source to verify that this is the current version before use.

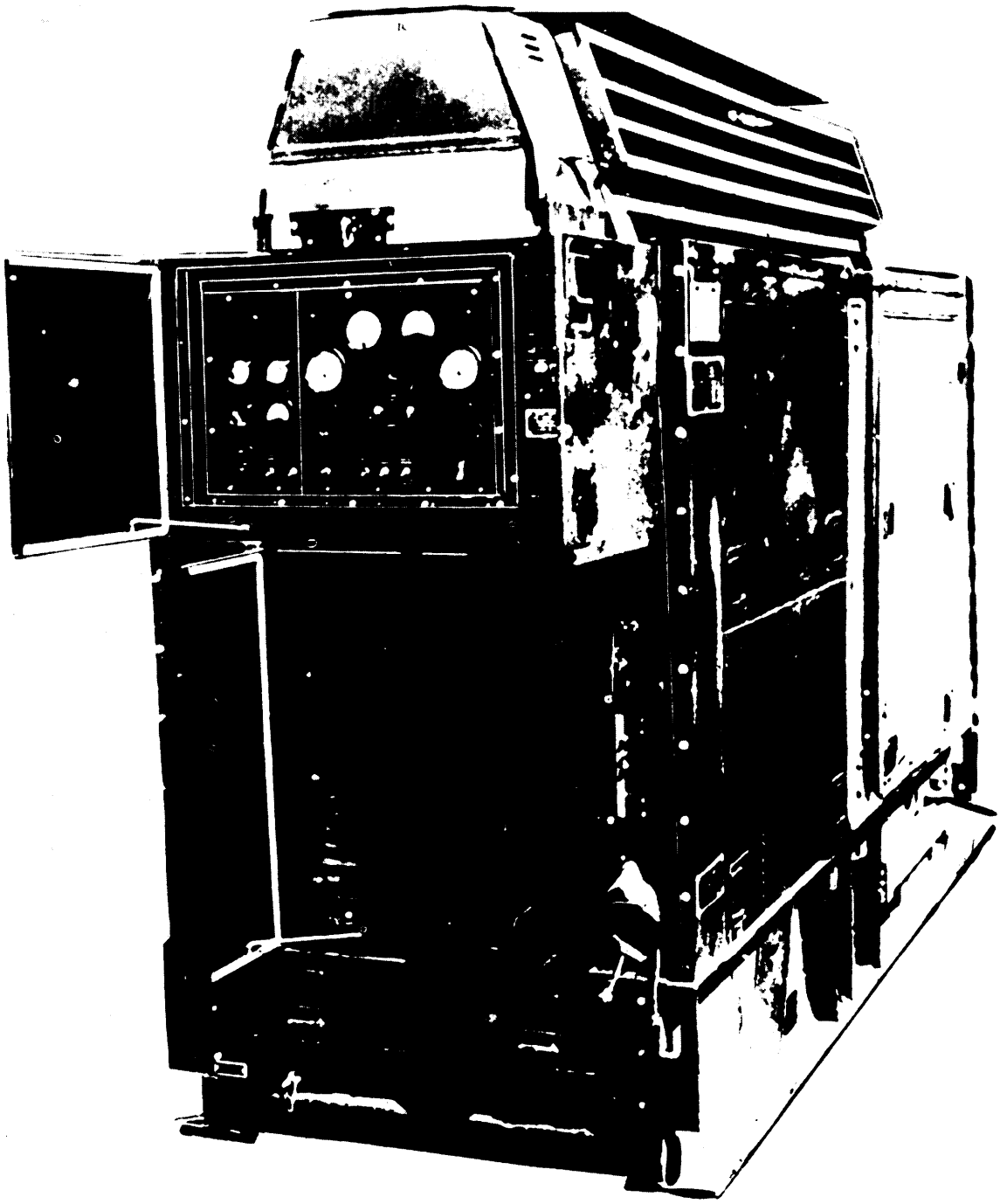

FIGURE 47. MEP-007B (100 kW, 50/60 Hz, DED).

X-3579

Source: https://assist.dla.mil -- Downloaded: 2016-12-11T08:39Z
Check the source to verify that this is the current version before use.

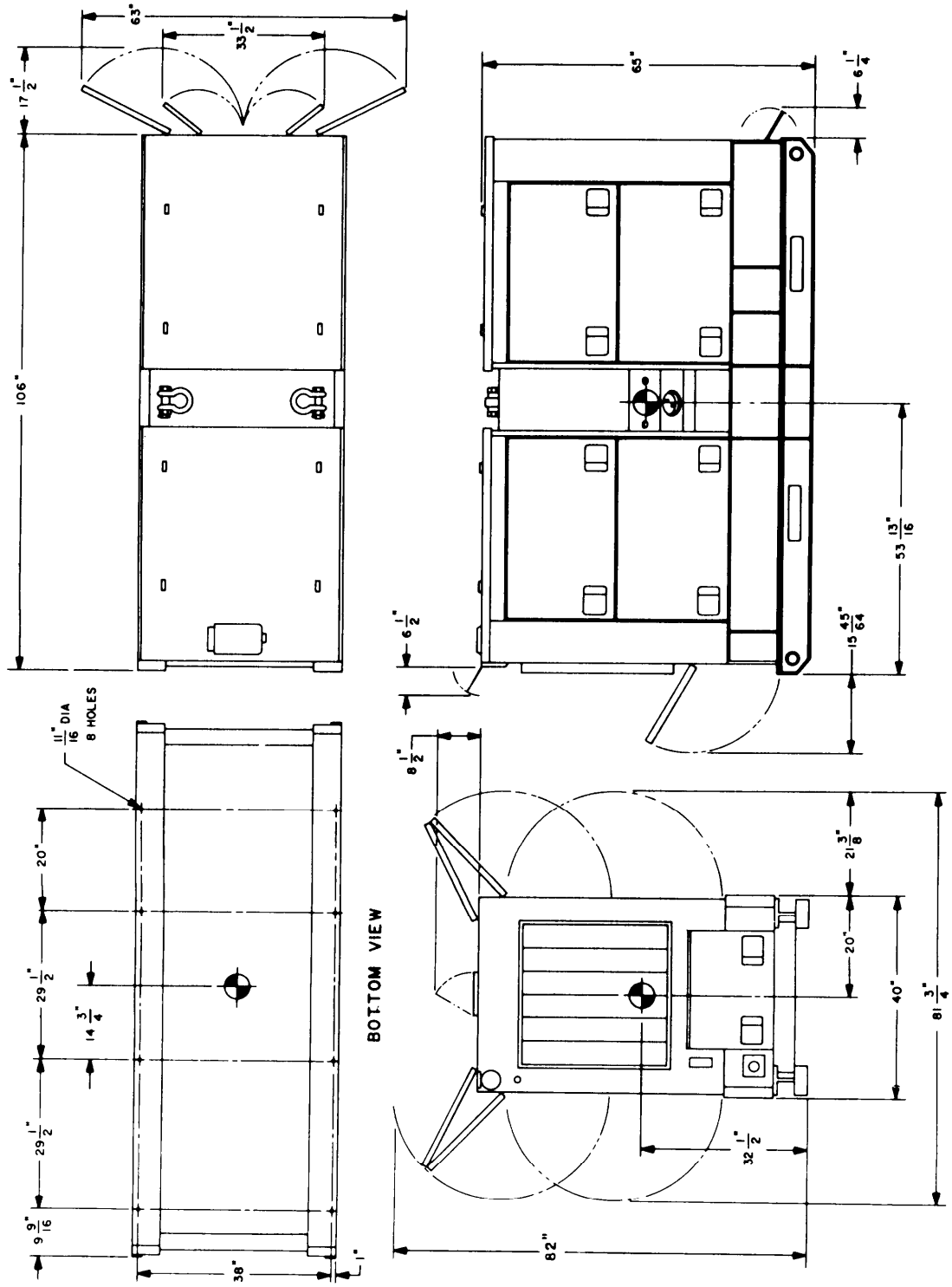

FIGURE 48. MEP-007B (100 kW, 50/60 Hz, DED).

X-3580

Source: https://assist.dla.mil -- Downloaded: 2016-12-11T08:39Z
Check the source to verify that this is the current version before use.

MILITARY STANDARD
MOBILE ELECTRIC POWER
ENGINE GENERATOR STANDARD FAMILY
MEP-116B, 100 kW, 400 Hz, DIESEL ENGINE-DRIVEN GENERATOR SET
CHARACTERISTICS DATA SHEET

CLASSIFICATION

Description: 100 kW @ 0.8 power factor, 400 Hz, 120/208 V, 240/416 V

Model:	MEP-116B	Type:	I (tactical)
NSN:	6115-01-042-9846	Class:	
Spec:	PD, 1 Aug 77	Mode:	II (400 Hz)

PHYSICAL CHARACTERISTICS

Dimensions: See Figures 49 and 50 on pages 160 and 161.

Weight: 7000 lbs (3175 kg).

Mobility: Fully housed. Mounted on skid base. Lifting and tie-down attachments provided. Fork lift provision.

Engine: Diesel.Std: MIL-STD-1410. Horsepower: 221min @ 2000 RPM. No. of cyl: 6. Cycle: 4. Liquid cooled. 24 VDC electric start. Operating speed: 2000 RPM. Fuel tank capacity: 90 gallons (approx 8 hrs at rated load). Fuel pump lift: 12 feet.

Fuel:

Primary: VV-F-800; Diesel Fuel Oil, types DF-1, DF-2 and DF-A.
Emergency Fuel: MIL-T-5624, Aviation Turbine Fuels, grades JP-4 and JP-5.

Electrical:

Drip proof generator enclosure. Capable of parallel operation. Fungus and moisture treatment. Solid state voltage regulator. Brushless rotary exciter.

Voltage Connection: 400 Hz: 120/208 V, 3 phase, 4 wire. 240/416 V, 3 phase, 4 wire.

Source: https://assist.dla.mil -- Downloaded: 2016-12-11T08:39Z
Check the source to verify that this is the current version before use.

Protective Devices: Short circuit protection. Overvoltage protection. Overload protection. Reverse power protection. Low oil pressure cut-off switch. High temperature cut-off switch. Low fuel level cut-off switch. Overspeed cut-off switch.

Instrumentation: Voltmeter. Frequency meter. Ammeter. Hourmeter. Wattmeter (% load). Oil pressure gage. Battery charging ammeter (% current). Fault indicating system. Coolant temperature indicator. Fuel level.

FUNCTIONAL/OPERATIONAL CHARACTERISTICS

Reliability: Mean Time Between Failures (MTBF) 580 hours (specified).

Fuel Consumption: 10 gph at rated load.

Electromagnetic Interference: Suppression to MIL-STD-461 limits.

	Voltage	Frequency
Steady State Stability (variation)		
Short Term (30 see)	1% Bandwidth	0.5% Bandwidth
Long Term (4 hours)	2% Bandwidth	1% Bandwidth
Transient Performance		
Application of rated load	15% Dip	*4% Undershoot
recovery	0.5 Sec	2 Sec
Rejection of rated load	15% Rise	*4% Overshoot
recovery	0.5 Sec	2 Sec
Application of simulated motor load	30% Dip	
recovery	0.7 Sec	
		*Frequency performance at 50% of rated load.
Waveform		
Maximum Deviation Factor	5%	
Individual Harmonic	2%	
Regulation		0-3% Adjustable

Adjustment Range for Standard Voltage Connections

120/208 v Corm:	400 Hz:	197 to 229 V.
240/416 V Corm:	400 Hz:	395 to 458 V.

Frequency Adjustment Range: 385 to 415 Hz.

Source: https://assist.dla.mil -- Downloaded: 2016-12-11T08:39Z
Check the source to verify that this is the current version before use.

ENVIRONMENTAL DATA

Power Output at Environmental Conditions:

100 kW, 400 Hz, Sea Level: Minus 25° F (-31.7° C) to plus 125° F (+51.7° C)
100 kW, 400 Hz, 5000 feet: Minus 25° F (-31.7° C) to plus 107° F (+41.7° C)
Winterization system extends lower temperature limit to minus 65° F (-53.9° C)

Shock and Rough Handling: 10 mph railroad impact. 12 inch end drop. Truck and trailer transportation.

Attitude: Operate with base level or inclined no more than 15 degrees from level.

Noise Level: 91 dbA @ 25 feet.

OPTIONAL EQUIPMENT

See 4.4.3 of MIL-STD-633 for additional information on optional equipment.

Description	NSN	Weight lbs (kg)	Effect on Dim (ins)
Wntzn Kit (Fuel burning)	To be determined		Int
Wntzn Kit (Electric)	To be determined		Int
Wntzn Kit, Aux, Fuel burning	6115-00-463-9098	350 (158.8)	Aux: (41x40x26)
Wntzn Kit, Aux, Elect.	6115-00-463-9099	260 (117.9)	Aux: (36x27x19)
Remote Control Box	6115-00-420-8490	8 (3.6)	Int
Load Bank	6115-00-464-9086	370 (167.8)	Ext: H+19
Wheel Mounting Kit	6115-00-463-9089	580 (263)	Ext: H+13,L+9,W+30
Panel, Auto, Standby, 400 Hz	6115-00-463-9096	825 (374.2)	Aux: (44X19X42)

REFERENCE DOCUMENTS

Technical Manuals: To be published.

Source: https://assist.dla.mil -- Downloaded: 2016-12-11T08:39Z
Check the source to verify that this is the current version before use.

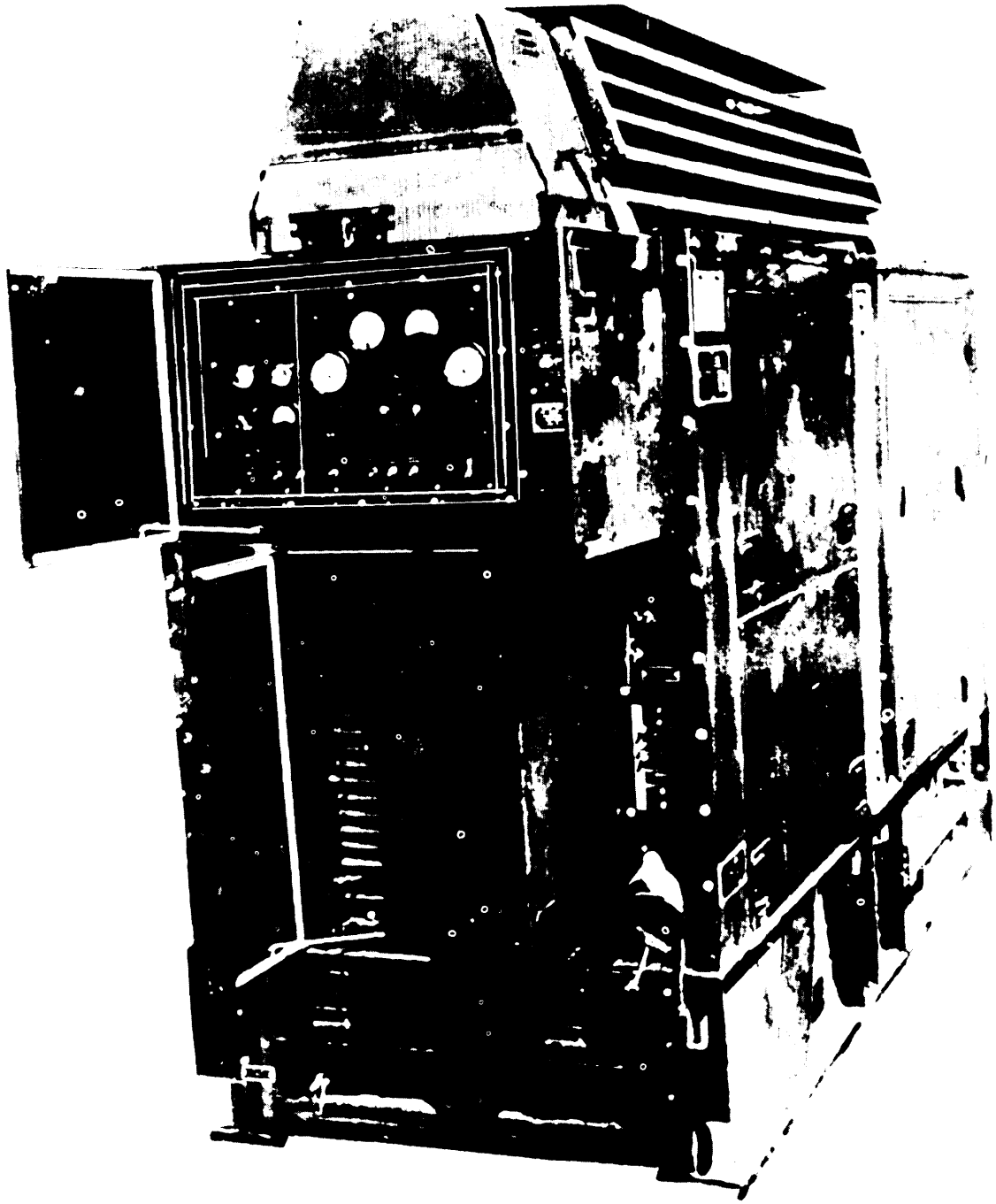

FIGURE 49. MEP-116B (100 kW, 400 Hz, DED).

X-3581

Source: https://assist.dla.mil -- Downloaded: 2016-12-11T08:39Z
Check the source to verify that this is the current version before use.

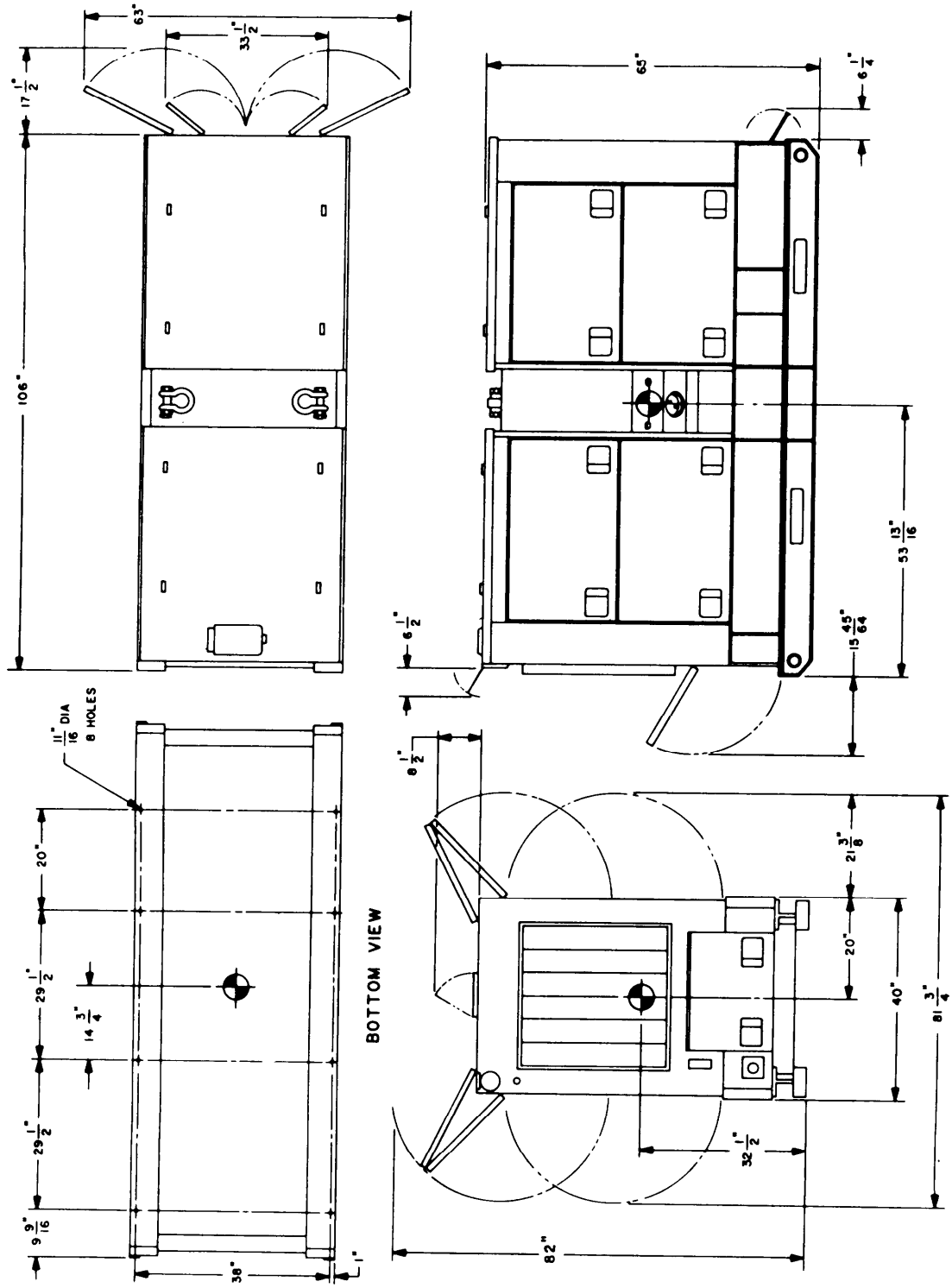

FIGURE 50. MEP-116B (100 kW, 400 Hz, DED).

X-3582

Source: https://assist.dla.mil -- Downloaded: 2016-12-11T08:39Z
Check the source to verify that this is the current version before use.

MILITARY STANDARD
MOBILE ELECTRIC POWER
ENGINE GENERATOR STANDARD FAMILY
MEP-009B, 200 kW, 50-60 Hz, DIESEL ENGINE-DRIVEN GENERATOR SET
CHARACTERISTICS DATA SHEET

CLASSIFICATION

Description: 200 kW @ 0.8 power factor, 50/60 Hz, 120/208 V, 240/416 V.

Model:	MEP-009B	Type:	I (tactical)
NSN:	6115-01-021-4096	Class:	
Spec:		Mode:	I (50/60 Hz)

PHYSICAL CHARACTERISTICS

Dimensions: See Figures 51 and 52 on pages 165 and 166.

Weight: 10,500 lbs (4770 kg).

Mobility: Fully housed. Mounted on skid base. Lifting and tie-down attachments provided. Fork lift provision.

Engine: Diesel. Std: MIL-STD-1410. Horsepower: 340 (min) @ 1800 RPM. No. of cyl: 6. Cycle: 4. Liquid cooled. 24 VDC electric start. Operating speed: 50 Hz: 1500 RPM, 60 Hz: 1800 RPM. Fuel tank capacity: To provide 8 hours operation at rated load. Fuel pump lift: 12 feet.

Fuel:

Primary: VV-F-800; Diesel Fuel Oil, types DF-1, DF-2 and DF-A, and MIL-F-16884; Marine Diesel Fuel Oil.
Emergency Fuel: MIL-T-5624, Aviation Turbine Fuels, grades JP-4 and JP-5.

Electrical:

Drip proof generator enclosure. Capable of parallel operation. Fungus and moisture treatment. Solid state voltage regulator. Brushless rotary exciter.

Voltage Connection:

60 Hz:	120/208 V, 3 phase, 4 wire.	240/416 V, 3 phase, 4 wire.
50 Hz:	120/208 v, 3 phase, 4 wire.	240/416 V, 3 phase, 4 wire.

Source: https://assist.dla.mil -- Downloaded: 2016-12-11T08:39Z
Check the source to verify that this is the current version before use.

Protective Devices: Short circuit protection. Overvoltage protection. Overload protection. Reverse power protection. Low oil pressure cut-off switch. High temperature cut-off switch. Low fuel level cut-off switch. Overspeed cut-off switch.

Instrumentation: Voltmeter. Frequency meter. Ammeter. Hourmeter. Wattmeter (% load). Oil pressure gage. Battery charging ammeter (% current). Fault indicating system. Coolant temperature indicator. Fuel level.

FUNCTIONAL/OPERATIONAL CHARACTERISTICS

Reliability: Mean Time Between Failures (MTBF): 468 hours (specified).

Fuel Consumption: 16 gph at rated load.

Electromagnetic Interference: Suppression to MIL-STD-461 limits.

	Voltage	Frequency
Steady State Stability (variation)		
Short Term (30 see)	1% Bandwidth	0.5% Bandwidth
Long Term (4 hours)	2% Bandwidth	1% Bandwidth
Transient Performance		
Application of rated load	15% Dip	4% Undershoot
recovery	0.5 Sec	2 Sec
Rejection of rated load	15% Rise	4% Overshoot
recovery	0.5 Sec	2 Sec
Application of simulated motor load	30% Dip	
recovery	0.7 Sec	
Waveform		
Maximum Deviation Factor	5%	
Individual Harmonic	2%	
Regulation	1$	0.25%

Adjustment Range for Standard Voltage Connections

120/208 v Corm:	60 Hz:	197 to 240 V.	50 Hz:	190 tO 213 v.
240/416 V Corm:	60 Hz:	395 to 480 V.	50 Hz:	380 to 426 V.

Frequency Adjustment Range: 58 to 62 Hz. 48 to 52 Hz.

Source: https://assist.dla.mil -- Downloaded: 2016-12-11T08:39Z
Check the source to verify that this is the current version before use.

ENVIRONMENTAL DATA

Power Output at Environmental Conditions:

200 kW, 60 Hz, Sea level: Minus 25° F (-31.7° C) to plus 125° F (+51.7° C)
200 kW, 60 Hz, 5000 feet: Minus 25° F (-31.7° C) to plus 107° F (+41.7° C)
167 kW, 50 Hz, Sea level: Minus 25° F (-31.7° C) to plus 125° F (+51.7° C)
167 kW, 50 Hz, 5000 feet: Minus 25° F (-31.7° C) to plus 107° F (+41.7° C)
Winterization system extends lower temperature limit to minus 65° F (-53.9° C).

Shock and Rough Handling: 10 mph railroad impact. 12 inch end drop. Truck and trailer transportation.

Attitude: Operate with base level or inclined no more than 15 degrees from level.

Noise Level: 93 dbA @ 25 feet (estimate).

OPTIONAL EQUIPMENT

See 4.4.3 of MIL-STD-633 for additional information on optional equipment.

Description	NSN	Weight lbs (kg)	Effect on Dim (ins)
Wntzn Kit (Fuel burning)	6115-00-403-3761		Int
Wntzn Kit (Electric)	6115-00-489-7285		Int
Wntzn Kit, Aux, Fuel Burning	6115-00-463-9098	350 (158.8)	Aux: (41x40x26)
Wntzn Kit, Aux, Elect.	6115-00-463-9099	260 (117.9)	Aux: (36x27x19)
Remote Control Box	6115-00-420-8490	8 (3.6)	Int
Load Bank	6115-00-403-3762	580 (263.1)	Ext: H+23
Panel, Auto, Load Transfer, 60 Hz	6115-00-477-7932	825 (374.2)	Aux: (44x19x42)

REFERENCE DOCUMENTS

Technical Manuals: Not available at this time.

Source: https://assist.dla.mil -- Downloaded: 2016-12-11T08:39Z
Check the source to verify that this is the current version before use.

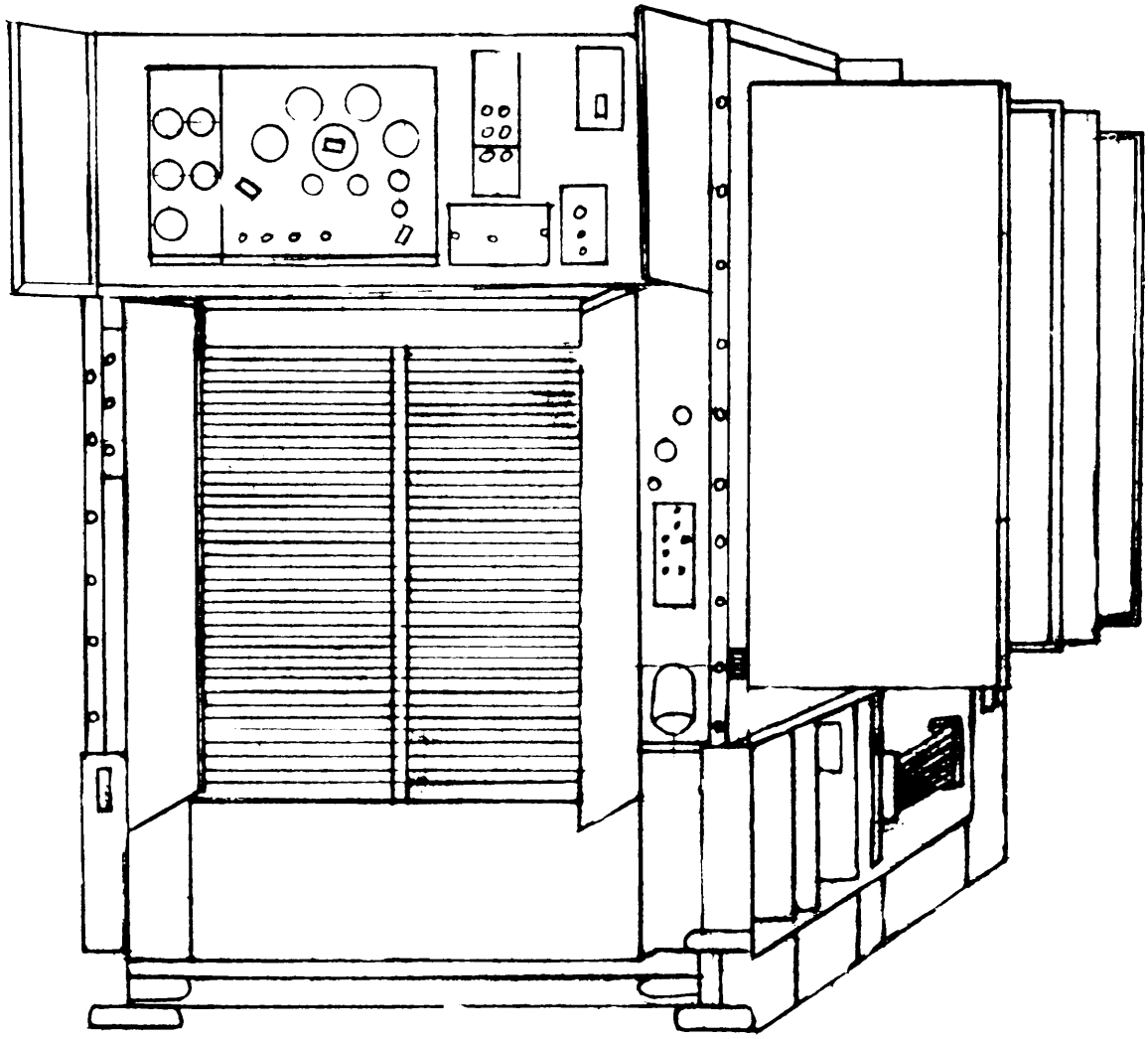

FIGURE 51. MEP-009B (200KW. 50/60 Hz DED).

X-3520

Source: https://assist.dla.mil -- Downloaded: 2016-12-11T08:39Z
Check the source to verify that this is the current version before use.

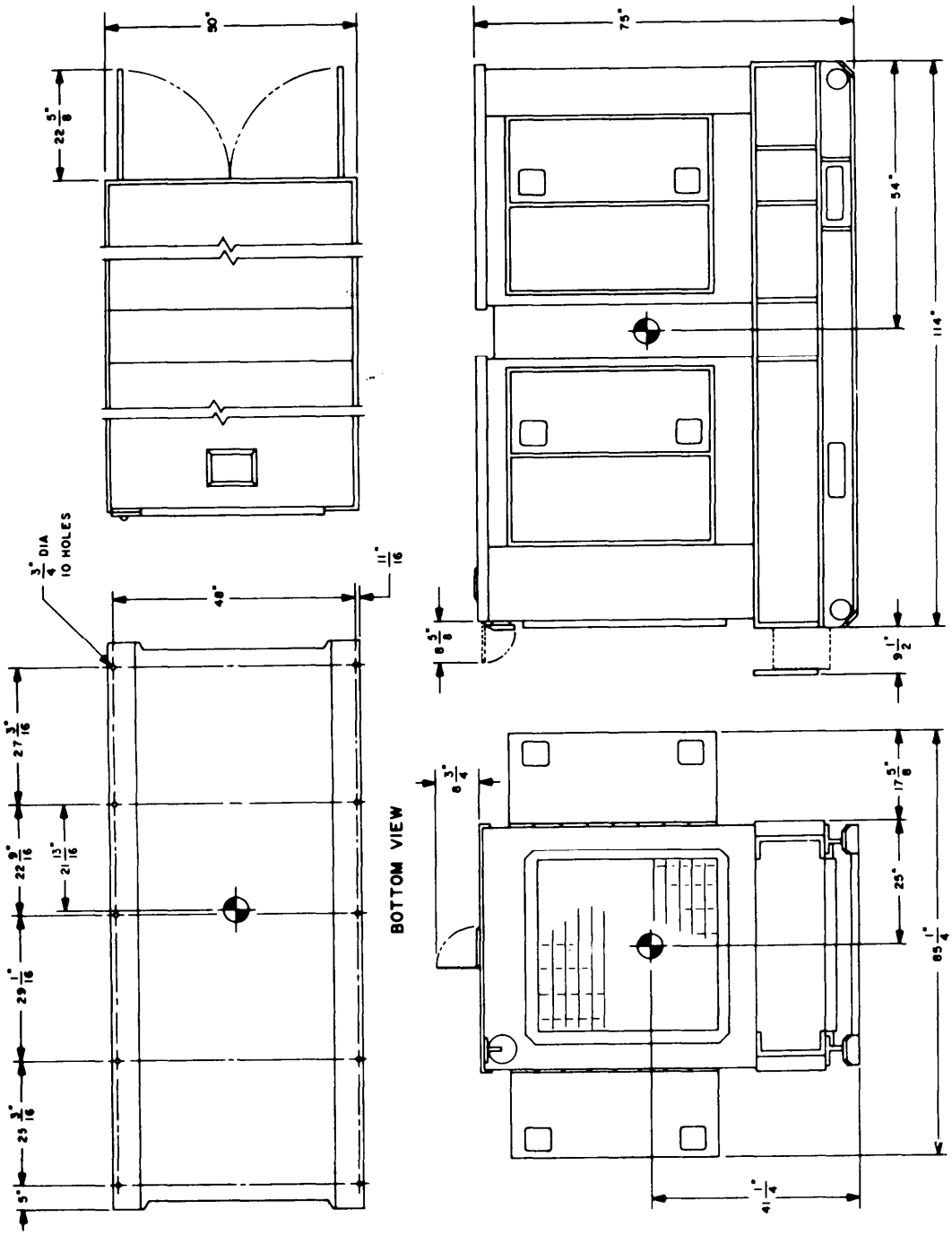

FIGURE 52. MEP-009B (200 kW, 50/60 Hz, DED).

X-3583

Source: https://assist.dla.mil -- Downloaded: 2016-12-11T08:39Z
Check the source to verify that this is the current version before use.

MILITARY STANDARD
MOBILE ELECTRIC POWER
ENGINE GENERATOR STANDARD FAMILY
MEP-01lA, 500 kW, 50-60 Hz, DIESEL ENGINE-DRIVEN GENERATOR SET
CHARACTERISTICS DATA SHEET

CLASSIFICATION

Description: 500 kW @ 0.8 power factor, 50/60 Hz, 2400/4160 V, 2200/3800 V.

Model:	MEP-01lA	Type:	I (tactical)
NSN:	6115-00-476-5878	Class:	2 (utility)
Spec:	MIL-G-28630	Mode:	I (50/60 Hz)

PHYSICAL CHARACTERISTICS

Dimensions: H-120"* L-240" W-96".

Weight: 36,000 lbs (14,515 kg).

Mobility: Fully housed. Mounted on skid base. Lifting and tie-down attachments provided.

Engine: Diesel. Std: MIL-STD-1410. Horsepower: 800 (Cont) @ 1800 RPM (max). No. Of Cyl: . Cycle: . Liquid cooled. 32 VDC electric start. Operating speed: 50 Hz: 1500 RPM (max), 60 Hz: 1800 RPM (max). Fuel tank capacity: Approx 8 hours operation at rated load. Fuel pump lift: 10 feet. Engine preheat system: electric.

Fuel:

Primary: VV-F-800; Diesel Fuel Oil, types DF-1, DF-2 and DF-A, and MIL-F-16884; Marine Diesel.
Emergency Fuel: MIL-T-5624, Aviation Turbine Fuels, grades JP-4 and JP-5.

Electrical:

Drip proof generator enclosure. Capable of parallel operation. Fungus and moisture resistant. Solid state voltage regulator. Brushless rotary exciter.

Voltage Connection:

60 Hz:	2400/4160 V, 3 phase, 4 wire.	2400 V, 3 phase, 3 wire.
50 Hz:	2200/3800 V, 3 phase, 4 wire.	2200 V, 3 phase, 3 wire.

*Excludes external exhaust system.

Source: https://assist.dla.mil -- Downloaded: 2016-12-11T08:39Z
Check the source to verify that this is the current version before use.

Protective Devices: Over/under voltage protection. Underfrequency. Overcurrent (w/instantaneous unit for short circuit protection). Reverse power relay. Low oil pressure cut-off switch. High temperature cut-off switch. Overspeed; low fuel level cut-off switch.

Instrumentation: Voltmeter. Frequency meter. Ammeter. Hourmeter. Synchroscope. Oil pressure gage. Battery charging ammeter (% current). Fault indicating system. Coolant tempeature indicator. Fuel level. Air cleaner condition device.

FUNCTIONAL/OPERATIONAL CHARACTERISTICS

Reliability: Mean Time Between Failures (MTBF): 500 hours (specified).

Fuel Consumption: Not available.

Electromagnetic Interference: Suppression to MIL-STD-461 limits.

	Voltage	Frequency
Steady State Stability (variation)		
Short Term (30 see)	1% Bandwidth	0.5% Bandwidth
Long Term (4 hours)	2% Bandwidth	1% Bandwidth
Transient Performance		
Application of rated load	20% Dip	3% Undershoot
recovery	3 Sec	4 Sec
Rejection of rated load	30% Rise	4% Overshoot
recovery	3 Sec	4 Sec
Application of simulated motor load	N/A	
Waveform		
Maximum Deviation Factor	5%	
Individual Harmonic	2%	
Regulation	2 %	0-5% Adjustable

Adjustment Range for Standard Voltage Connections

2400/4160 V Corm:	60 Hz:	3745 to 4574 V.	2400 V: 60 Hz:	2160 to 2640 V.
2200/3800 V Corm:	50 Hz:	3420 to 4180 V.	2200 V: 50 Hz:	1980 to 2420 V.

Frequency Adjustment Range: 58 to 62 Hz. 48 to 52 Hz.

ENVIRONMENTAL DATA

Power Output at Environmental Conditons:

60 Hz, 500 kW, Sea level:	Minus 250 F* (-31.7° C) to plus 125° F (+51.7° C)
60 Hz, 500 kW, 1500 feet:	Minus 25° F* (-31.7° C) to plus 90° F (+32.2° C)
60 Hz, 375 kW, 8000 Feet:	Minus 25° F* (-31.7° C) to plus 90° F (+32.2° C)
50 Hz, 417 kW, Sea level:	Minus 25° F* (-31.7° C) to plus 125° F (+51.7° C)
50 Hz, 417 kW, 1500 feet:	Menus 25° F* (-3107° C) to plus 90° F (+32.2° C)
50 Hz, 313 kW, 8000 feet:	Minus 25° F* (-31.7° C) to PIUS 90° F (+32.2° C)

*With electric engine preheat system.

Source: https://assist.dla.mil -- Downloaded: 2016-12-11T08:39Z
Check the source to verify that this is the current version before use.

Shock and Rough Handling: 5 mph railroad impact.

Attitude: Operate with base level or inclined no more than 15 degrees from level.

Noise Level: N/A

OPTIONAL EQUIPMENT

Not Applicable.

REFERENCE DOCUMENTS

Technical Manuals: To be published.

Source: https://assist.dla.mil -- Downloaded: 2016-12-11T08:39Z
Check the source to verify that this is the current version before use.

MILITARY STANDARD
MOBILE ELECTRIC POWER
ENGINE GENERATOR STANDARD FAMILY
MEP-029, 500 kW, 50-60 Hz DIESEL ENGINE-DRIVEN GENERATOR SET
CHARACTERISTICS DATA SHEET

CLASSIFICATION

Description: 500 kW @ 0.8 power factor, 50/60 HZ, 120/208 v, 240/416 v.

Model:	MEP-029A	Type:	I (tactical)
NSN:	6115-01-030-6085	Class:	2 (utility)
Spec:	MIL-G-52880	Mode:	I (50/60 Hz)

PHYSICAL CHARACTERISTICS

Dimensions: L=219", W=88", H=120" See Figures 53 and 54 on pages 173 and 174.

Weight: 34,050 lbs (15,445 kg).

Mobility: Unhoused. Mounted on skid base. Lifting and tie-down attachments provided. Air transportable.

Engine: Diesel Std: MIL-STD-1410. Horsepower: 830 @ 1800 RPM. No.of cy:. 12• cycle 4. Liquid cooled. 24 VDC electric start. Operating speed: 50 Hz: 1500 RPM, 60 Hz: 1800 RPM. Fuel tank capacity: 117 gallons (approx 3 hours at rated load). Fuel pump lift: 10 feet. Fuel transfer pump.

Fuel:
Pimary: VV-F-800; Diesel Fuel Oil, Types DF-1, DF-2, and DF-A.
Emergency Fuel: MIL-T-5624, Aviation Turbine Fuels, grade JP-5.

Electrical:
Drip proof generator enclosure. Capable of parallel operation. Fungus and moisture treatment. Solid state voltage regulator. Brushless rotary exciter. Circuit breaker.

Voltage Connection:
60 Hz: 120/208 V, 3 phase, 4 wire. 240/416 V, 3 phase, 4 wire.
50 Hz: 120/208 V, 3 phase, 4 wire. 240/416 V, 3 phase, 4 wire.

Protective Devices: Overvoltage. Short circuit protection. Overload synchronizing check relay. Reverse power relay. Low oil pressure cut-off switch. High coolant temperature cut-off switch. Overspeed. Low fuel level. High oil temperature. Annunicator alarm system.

Source: https://assist.dla.mil -- Downloaded: 2016-12-11T08:39Z
Check the source to verify that this is the current version before use.

Instrumentation: Voltmeter. Frequency meter. Ammeter. Hourmeter. Kilowattmeter. Oil pressure gage. Oil temperature gage. Battery charging voltmeter. Coolant temperature gage. Fuel level. 50/60 Hz clock.

FUNCTIONAL/OPERATIONAL CHARACTERISTICS

Reliability: Mean Time Between Failures (MTBF): 500 hours (specified).

Fuel Consumption: 37 gph at rated load.

Electromagnetic Interference: Suppression to MIL-STD-461 limits.

	Voltage	Frequency
Steady State Stability (variation)		
Short Term (30 See)	1% Bandwidth	0.5% Bandwidth
Long Term (4 hours)	2% Bandwidth	1% Bandwidth
Transient Performance		
Application of rated load	20% Dip	4% Undershoot
recovery	3 Sec	4 Sec
Rejection of rated load	30% Rise	4% Overshoot
recovery	NS	4 Sec
Application of simulated motor load	NS	
Waveform		
Maximum Deviation Factor	5%	
Individual Harmonic	2%	
Regulation	2%	0-3% Adjustment 0.25% Isochronous

Adjustment Range for Standard Voltage Connections:

120/208 v Corm:	60 Hz:	197 to 250 V.	50 Hz:	190 tO 213 v.
240/416 V Corm:	60 Hz:	395 to 500 V.	50 Hz:	380 to 426 v.

Frequency Adjustment Range: 57.5 to 62.5 Hz. 47.6 to 52.5 Hz.

ENVIRONMENTAL DATA

Power Output at Environmental Conditions:

500 kW, 60 Hz: Sea level, plus 32° F (0° C) to plus 125° F (+51.7° C)
500 kW, 60 Hz: 1500 ft, plus 32° F (0° C) to plus 90° F (+32.2° C)
400 kW, 60 Hz: 5000 ft, plus 32° F (0° C) to plus 107° F (+41.7° C)
375 kW, 60 Hz: 8000 ft, plus 32° F (0° c) to plus 95° F (+35° C)
415 kW, 50 Hz: Sea level, plus 32° F (0° c) to plus 125° F (+51.7° c)
415 kW, 50 Hz: 1500 ft, plus 32° F (0° c) tO plus 90° F (+32.2° c)
334 kW, 50 Hz: 5000 ft, plus 32° F (0° C) to plus 107° F (+41.7° C)
313 kW, 50 Hz: 8000 ft, plus 32° F (0° C) to plus 95° F (+35° C)

Housing kit and operation of built in engine preheat system, which requires 120/240 V, 50/60 Hz power, extend lower temperature limit to 25° F (-31.7° C).

Source: https://assist.dla.mil -- Downloaded: 2016-12-11T08:39Z
Check the source to verify that this is the current version before use.

Shock and Rough Handling: 8 mph railroad impact.

Attitude: Operate with base level or inclined no more than 5 degrees from level.

Noise Level: Housed: 86 dbA @ 25 feet. Unhoused: 89 dbA @ 25 feet.

OPTIONAL EQUIPMENT

See 4.4.4 of MIL-STD-633 for additional information on optional equipment.

Description	NSN	Weight lbs (kg)	Effect on Dim (ins)
Housing Kit	To be determined	1950 (885)	None
Set Control Module	To be determined	267 (121)	Aux: (31x41x67)
Paralleling Control Module	To be determined	337 (153)	Aux: (31x41x67)
Remote Control Station	To be determined	371 (168)	Aux: (34x24x59)
Remote Control Cable	To be determined	150 (68) per 100'	Aux: (L+O 12,000)

REFERENCE DOCUMENTS

Technical Manuals:

Army	Air Force	Marine Corps	Navy
TM 5-	TO-		NAVFAC
6115-593-12	35C2-3-463-1	UM6115-12/6	P-8-631-12
6115-593-34	35C2-3-463-2	TM6115-34/7	P-8-631-34
6115-593-24P	35C2-3-463-4	TM6115-24/2	P-8-631-24P

Source: https://assist.dla.mil -- Downloaded: 2016-12-11T08:39Z
Check the source to verify that this is the current version before use.

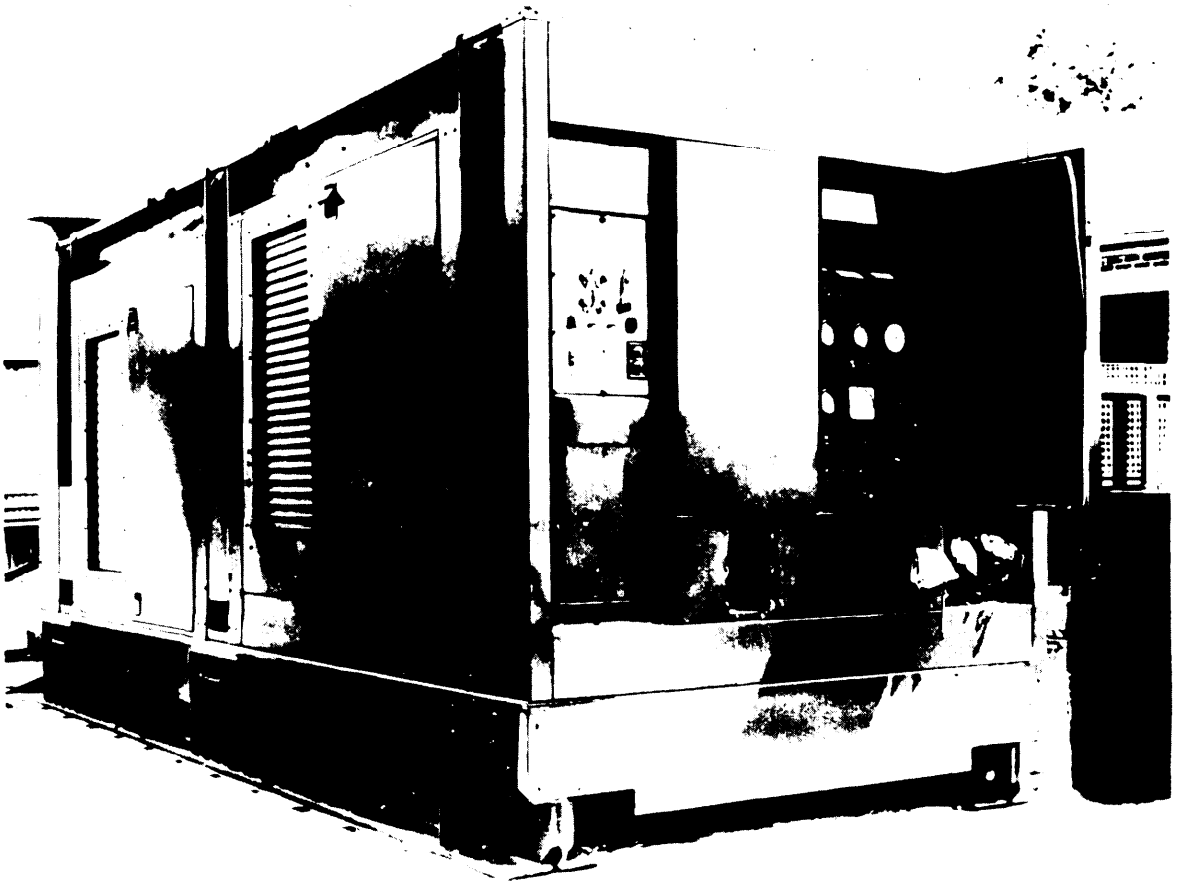

FIGURE 53. MEP-029A (500 kW, 50/60 Hz, DED).

X-3584

Source: https://assist.dla.mil -- Downloaded: 2016-12-11T08:39Z
Check the source to verify that this is the current version before use.

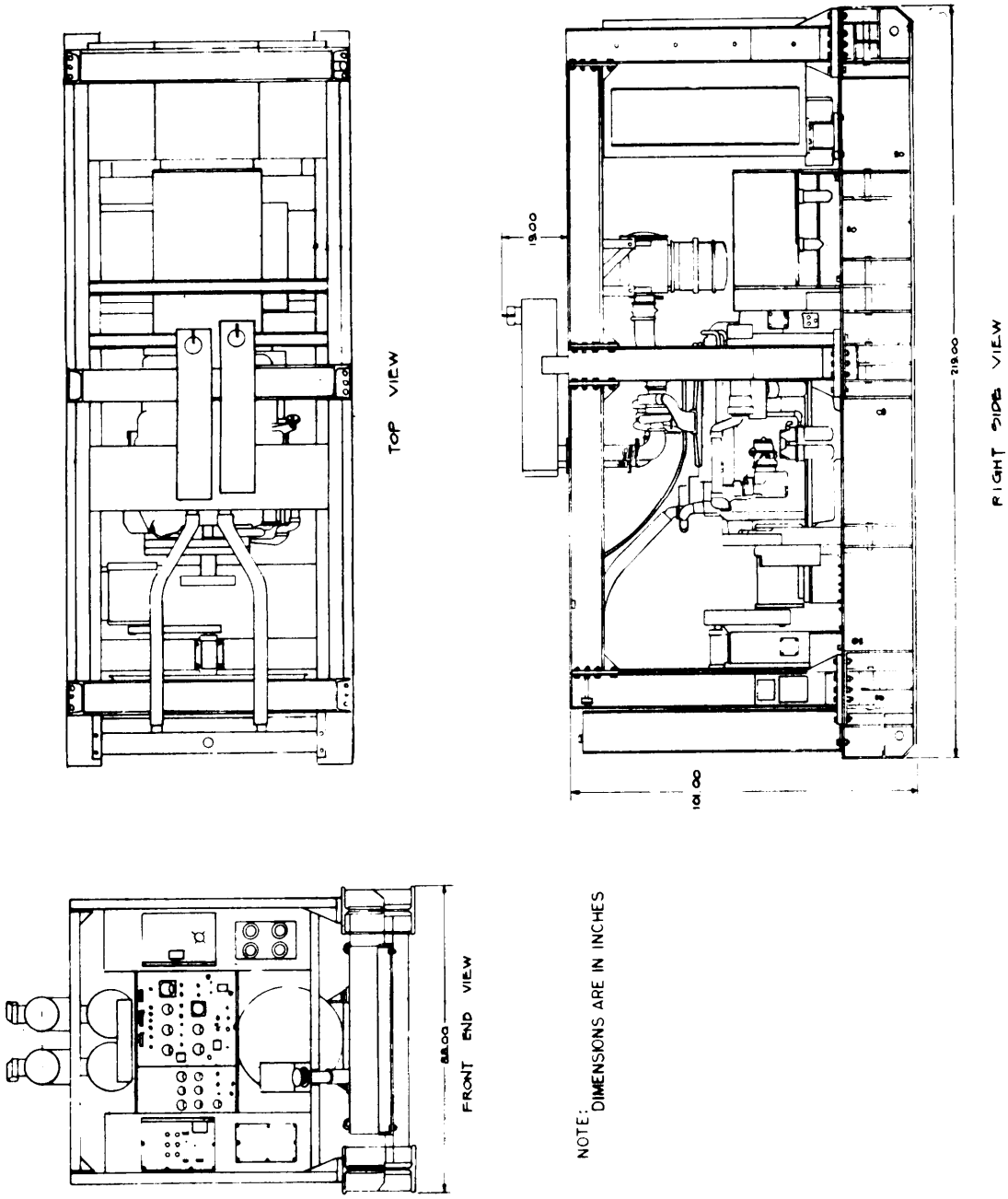

X-3514

FIGURE 54. MEP-029A (500 KW, 50/60 Hz, DED).

Source: https://assist.dla.mil -- Downloaded: 2016-12-11T08:39Z
Check the source to verify that this is the current version before use.

MILITARY STANDARD
MOBILE ELECTRIC POWER
ENGINE GENERATOR STANDARD FAMILY
MEP-208A, 750 kW, 50-60 Hz, DIESEL ENGINE-DRIVEN GENERATOR SET
CHARACTERISTICS DATA SHEET

CLASSIFICATION

Description: 750 kW @ 0.8 power factor, 60 Hz: 2400/4160 V, 2400 V, 50 Hz: 2200/3800 V, 2200 V.

Model:	MEP-208A	Type:	II (prime)
NSN:	6115-00-450-5881	Class:	2 (utility)
Spec:	MIL-G-82050	Mode:	I (50/60 Hz)

PHYSICAL CHARACTERISTICS

Dimensions: L=384", W=96", H=l00". (Excluding the external exhaust system)

Weight: 40,000 lbs (18,144 kg).

Mobility: Fully housed. Mounted on skid base. Lifting and tie-down attachments provided.

Engine: Diesel. Spee: Commercial. Horsepower: 1050 (Cont) @ 720 RPM (max). No. of cyl: Cycle: . Liquid cooled. Starting system: Comp. air (125-250 psi) . Operating speed: 50 Hz: 600 RPM (max), 60 Hz: 720 RPM (max). Fuel tank capacity: approx 8 hours operation at rated load. Fuel pump lift: 10 feet. Engine preheat system: electric. Electric fuel transfer pump. Aux fuel hose: 24 feet. Air compressor (gasoline engine and electrical motor). Air storage tank.

Fuel:
Primary: VV-F-800; Diesel Fuel Oil, types DF-1, DF-2 and DF-A, and MIL-F-16884, Marine Diesel.
Emergency Fuel: MIL-T-5624, Aviation Turbine Fuels, grades JP-4 and JP-5.

Electrical:
Drip proof generator enclosure. Capable of parallel operation. Fungus and moisture resistant. Solid state voltage regulator. Brushless rotary exciter. Circuit breaker. Cables: Outgoing power, 5 kv, 75 feet long, station power, 600 V, 75 feet long.

Voltage Connection:			
60 Hz:	2400/4160 V, 3 phase, 4 wire.	2400 V, 3 phase, 3 wire.
50 Hz:	2200/3800 V, 3 phase, 4 wire.	2200 V, 3 phase, 3 wire.

Source: https://assist.dla.mil -- Downloaded: 2016-12-11T08:39Z
Check the source to verify that this is the current version before use.

Protective Devices: Over/under voltage protection. Under frequency. Overload. Short circuit protection. Reverse power relay. Low oil pressure cut-off switch. High temperature cut-off switch. Overspeed, low fuel level cut-off switch. Air pressure relief valve.

Instrumentation: Voltmeter. Frequency meter. Ammeter. Watt-hour meter. Synchroscope. Temperature gage (generator windings). Oil pressure gage. Oil temperature gage. Starting air pressure gage. Fault indicating system. Coolant temperature indicator. Fuel level. Fuel temperature. Air cleaner condition device. Engine running time. Electronic tachometer. Exhaust pyrometer.

FUNCTIONAL/OPERATIONAL CHARACTERISTICS

Reliability: Mean Time Between Failures (MTBF): 1200 hours (specified).

Fuel Consumption: Not available.

Electromagnetic Interference: Suppression to MIL-STD-461 limits when specified.

	Voltage	Frequency
Steady State Stability (variation)		
Short Term (30 See)	1% Bandwidth	0.5% Bandwidth
Long Term (4 hours)	2% Bandwidth	1% Bandwidth
Transient Performance		
Application of rated load	20% Dip	3% Undershoot
recovery	3 Sec	4 Sec
Rejection of rated load	30% Rise	4% Overshoot
recovery	3 Sec	4 Sec
Application of simulated motor load	N/A	
Waveform		
Maximum Deviation Factor	5%	
Individual Harmonic	2%	
Regulation	2%	0-5% Adjustable

Adjustment Range for Standard Voltage Connections:

2400/4160 V Conn:	60 Hz:	3745 to 4574 V.	2400 V:	60 Hz:	2160 to 2640 V.
2200/3800 V Conn:	50 Hz:	3240 to 3960 V.	2200 V:	50 Hz:	1890 to 2310 V.

Frequency Adjustment Range: 58 to 62 Hz. 48 to 52 Hz.

ENVIRONMENTAL DATA

Power Output at Environmental Conditions:

750 kW: 60 Hz: Sea level, plus 32° F (0° C) to plus 125° F (+51.7° C)
750 kW: 60 Hz: 1500 feet, plus 32° F (0° C) to plus 90° F (+32.2° C)
562 kW: 60 Hz: 8000 feet, plus 32° F (0° C) to plus 90° F (+32.2° C)
625 kW: 50 Hz: Sea level, plus 32° F (0° C) to plus 125° F (+51.7° C)
625 kW: 50 Hz: 1500 feet, plus 32° F (0° C) to plus 90° F (+32.2° C)
469 kW: 50 Hz: 8000 feet, plus 32° F (0° C) to plus 90° F (+32.2° C)

Electric engine preheat system extends lower temperature limit to minus 25° F (-31.7° C).

Source: https://assist.dla.mil -- Downloaded: 2016-12-11T08:39Z
Check the source to verify that this is the current version before use.

Shock and Rough Handling: 5 mph railroad impact.

Attitude: Operate with base level or inclined no more than 5 degrees from level.

Noise Level: N/A

OPTIONAL EQUIPMENT

See 4.4.5 of MIL-STD-633 for additional information on optional equipment.

Description	NSN	Weight lbs (kg)	Effect on Dim (ins)
Set Control Module	To be determined	267 (121)	Aux: (31x14x67)
Paralleling Control Module	To be determined	337 (153)	Aux: (31x14x67)
Remote Control Station	To be determined	371 (168)	Aux: (34x24x59)
Remote Control Cable	To be determined	150 (68) per 100 ft	Aux: (L- to 12,000)

REFERENCE DOCUMENTS

Technical Manuals: To be published.

Source: https://assist.dla.mil -- Downloaded: 2016-12-11T08:39Z
Check the source to verify that this is the current version before use.

MILITARY STANDARD
MOBILE ELECTRIC POWER
ENGINE GENERATOR STANDARD FAMILY
MEP-409A, 750 kW, 50/60 Hz, GAS TURBINE ENGINE-DRIVEN GENERATOR SET
CHARACTERISTICS DATA SHEET

CLASSIFICATION

Description: 750 kW @ 0.8 power factor, 50/60 Hz, 2400/4160 V, 2400 V; 2000/3460 V, 2000 V.

Model:	MEP-409A	Type:	II (prime)
NSN:	6115-00-450-5885	Class:	2 (utility)
Spec:	MIL-G-28670	Mode:	I (50/60 Hz)

PHYSICAL CHARACTERISTICS

Dimensions: L=474", W=95", H=l14". See Figures 55 and 56 on pages 181 and 182.

Weight: 36,400 lbs (18,150 kg).

Mobility: Fully housed in van-type semi-trailer. Lifting and tie-down attachments provided.

Engine: Gas turbine. Horsepower: 1200 (cent) @ 22,300 RPM. 24 VDC electric start. Operating speed at output shaft: 60 Hz: 1800 RPM. 50 Hz: 1500 RPM. Fuel tank capacity: 500 gallons (approx 5 hours at rated load). Electric fuel transfer pump. 50 foot auxiliary fuel hose.

Fuel:
- Primary: MIL-T-5624, Aviation Turbine Fuels, grades JP-4 and JP-5, MIL-F-16886 Marine Diesel Fuel Oil and VV-F-800 Diesel Fuel Oil grades DF-1, DF-2 and DF-A.
- Emergency: Mil-G-3056 and VV-G-76 Automotive Gasoline, and MIL-G-5572 Aviation Gasoline, grades 80/87, 100/130 and 115/145.

Electrical:
- Drip proof generator enclosure. Brushless, fungus and moisture resistant.
- Capable of parallel operation.
- Solid state voltage regulator. Circuit breaker.
- Cables: Outgoing power 5 kV, 75 feet station power: 600 V, 75 feet.

Voltage Connection: 60 Hz: 2400/4160 V, 3 phase, 4 wire. 2400 V, 3 phase, 3 wire.
50 Hz: 2000/3460 V, 3 phase, 4 wire. 2000 V, 3 phase, 3 wire.

Source: https://assist.dla.mil -- Downloaded: 2016-12-11T08:39Z
Check the source to verify that this is the current version before use.

Protective Devices: Overvoltage. Undervoltage. Underfrequency. Reverse power. Overcurrent (with instantaneous unit for short circuit protection). Low oil pressure. High oil temperature. High turbine temperature. Low fuel level. Ignition failure. Excessive vibration. Overspeed. Underspeed.

Instrumentation: Voltmeter, generator. Voltmeter, bus. Ammeter. Frequency meter. Kilowattmeter. Watthour meter. Synchroscope. Temperature indicator (generator windings). Power factor meter. Annunciator panel. Kilovarmeter. Turbine speed. Turbine temperature. Turbine exhaust temperature. Fuel level gage. Running time meter.

FUNCTIONAL/OPERATIONAL CHARACTERISTICS

Reliability: Mean Time Between Failures (MTBF): 1500 hours (specified).

Fuel Consumption: 96 gph at rated load.

Electromagnetic Interference: Suppression to MIL-STD-461 limits (when specified).

	Voltage	Frequency
Steady State Stability (variation)		
Short Term (30 See)	1% Bandwidth	0.5% Bandwidth
Long Term (4 hours)	2% Bandwidth	1% Bandwidth
Transient Performance		
Application of rated load	20$ Dip	3% Undershoot
recovery	3 Sec	4 Sec
Rejection of rated load	30% Rise	4% Overshoot
recovery	3 Sec	4 Sec
Application of simulated motor load	N/A	
Waveform		
Maximum Deviation Factor	5%	
Individual Harmonic	2%	
Regulation	2%	0-5% Adjustable

Adjustment Range for Standard Voltage Connections:
60 Hz, 2400/4160 V: 3750 to 4575 V. 60 Hz, 2400 V: 2160 to 2640 V.
50 Hz, 2000/3460 V: 3120 to 3813 V. 50 Hz, 2000 V: 1800 V to 2200 v.

Frequency Adjustment Range: 50 Hz: 48 - 52 Hz (rein). 60 Hz: 58 - 62 Hz (rein).

ENVIRONMENTAL DATA

Power Output at Environmental Conditions:
750 kW, 60 Hz: Sea level, 59° F (+15° C)
577 kW, 60 Hz: 6000 feet, 90° F (+32.2° C)
625 kW, 50 Hz: Sea level, 59° F (+15° C)
501 kW, 50 Hz: 6000 feet, 90° F (+32.2° C)
Ambient temperature limits for operation:
Minus 25° F (-31.7° C) to plus 125° F (+51.7° C).

Source: https://assist.dla.mil -- Downloaded: 2016-12-11T08:39Z
Check the source to verify that this is the current version before use.

Shock and Rough Handling: 5 mph railroad impact.

Attitude: Operate with base level or inclined no more than 15 degrees from level.

Noise Level: 85 dbA @ 25 feet. 80 dbt in control compartment.

OPTIONAL EQUIPMENT

None.

REFERENCE DOCUMENTS

Technical Manuals: Operation and Maintenance Instructions
US Army (MERADCOM) Mobile Van Generator Unit
750 kW (MEP-409A) July 1978

Source: https://assist.dla.mil -- Downloaded: 2016-12-11T08:39Z
Check the source to verify that this is the current version before use.

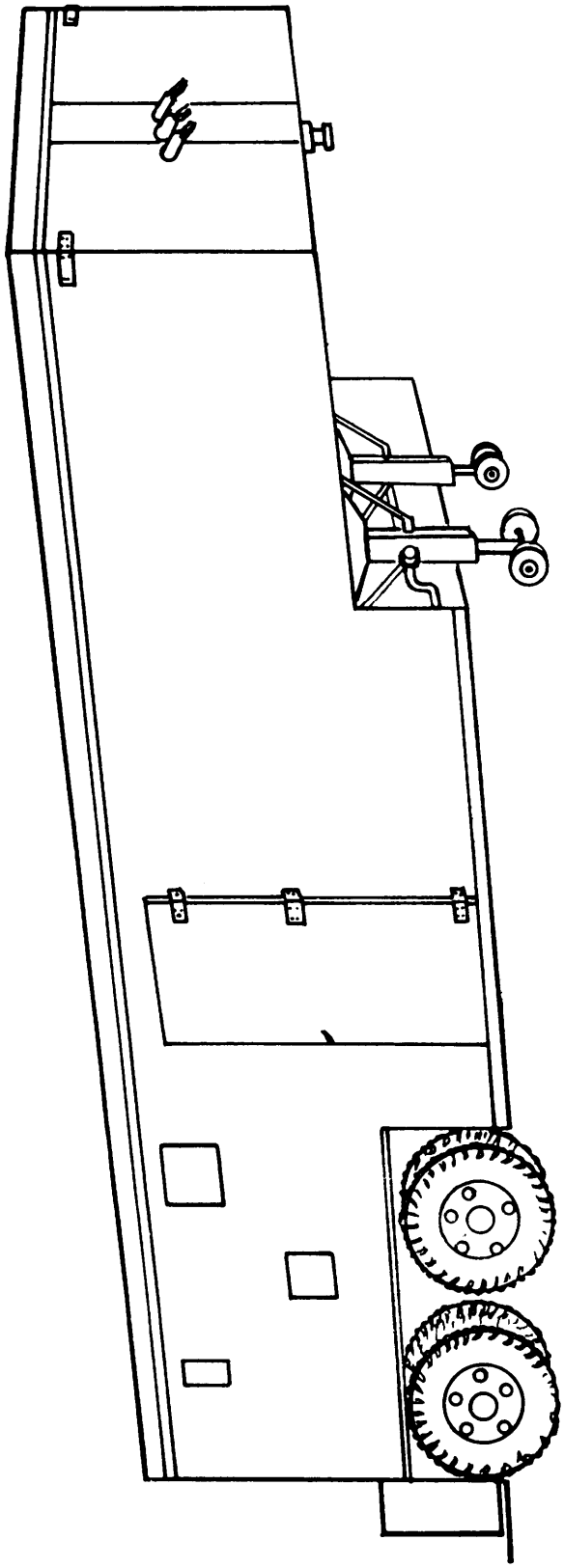

FIGURE 55. MEP-409A (750 kW, 50/60 Hz, GTED).

X-3516A

Source: https://assist.dla.mil -- Downloaded: 2016-12-11T08:39Z
Check the source to verify that this is the current version before use.

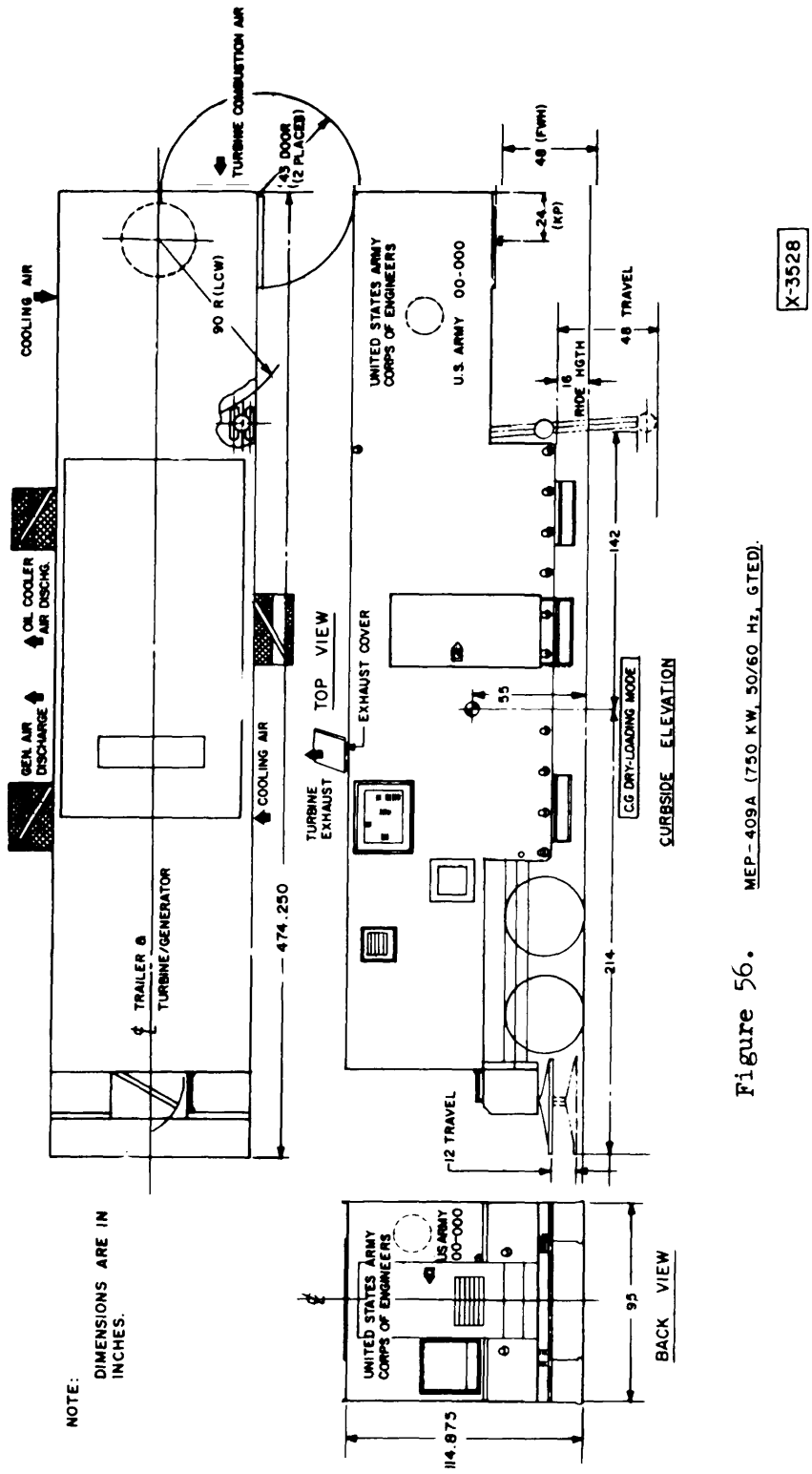

Figure 56. MEP-409A (750 KW, 50/60 Hz, GTED).

Source: https://assist.dla.mil -- Downloaded: 2016-12-11T08:39Z
Check the source to verify that this is the current version before use.

MILITARY STANDARD
MOBILE ELECTRIC POWER
ENGINE GENERATOR STANDARD FAMILY
MEP-007A, 100 kW, 50-60 Hz, DIESEL ENGINE-DRIVEN GENERATOR SET
CHARACTERISTICS DATA SHEET

CLASSIFICATION

Description: 100 kW @ 0.8 power factor, 50/60 Hz, 120/280 V, 240/416 V

Model:	MEP-007A	Type:	I (tactical)
NSN:	6115-01-133-9101	Class:	2 (utility)
Spec:	MIL-G-52884/11	Mode:	I (50/60 Hz)

PHYSICAL CHARACTERISTICS

Dimensions: See Figures 57 and 58 on pages 186 and 187.

Weight: 6680 lbs (3030 kg).

Mobility: Fully housed. Mounted on skid base. Lifting and tie-down attachments provided. Fork lift provision.

Engine: Diesel, Std: MIL-STD-1410. Horsepower: 170 min @ 1800 RPM. No. of : 6. Cycle: 4. Liquid cooled. 24 VDC electric start. Operating speed: 50 Hz: 1500 RPM, 60 Hz: 1800 RPM. Fuel tank capacity: 90 gallon (approx 8 hours at rated load). Fuel pump lift: 12 feet.

Fuel:
Primary: VV-F-800; Diesel Fuel Oil, types DF-1, DF-2 and DF-A.
Emergency Fuel: MIL-T-5624, Aviation Turbine Fuels, grades JP-4 and JP-5.

Electrical:
Drip proof generator enclosure. Capable of parallel operation. Fungus and moisture treatment.
Solid state voltage regulator. Brushless rotary exciter.

Voltage Connection: 60 Hz: 120/208 v, 3 phase, 4 wire. 240/416 V, 3 phase, 4 wire.
50 Hz: 120/208 V, 3 phase, 4 wire. 240/416 V, 3 phase, 4 wire.

Source: https://assist.dla.mil -- Downloaded: 2016-12-11T08:39Z
Check the source to verify that this is the current version before use.

Protective Devices: Short circuit protection. Overvoltage protection. Reverse power protection. Low oil protection. Low oil pressure cut-off switch. High temperature cut-off switch. Low fuel level cut-off switch. Overspeed cut-off switch.

Instrumentation: Voltmeter. Frequency meter. Ammeter. Hourmeter. Wattmeter (% load). Oil pressure gage. Battery charging ammeter (% current). Fault indicating system. Coolant temperature indicator. Fuel level.

FUNCTIONAL/OPERATIONAL CHARACTERISTICS

Reliability: Mean Time Between Failures (MTBF): 800 hours (specified).

Fuel Consumption: 8.5 gph at rated load.

Electromagnetic Interference: Suppression to MIL-STD-461 limits.

	Voltage	Frequency
Steady State Stability (variation)		
Short Term (30 See)	2% Bandwidth	2% Bandwidth
Long Term (4 hours)	4% Bandwidth	3% Bandwidth
Transient Performance		
Application of rated load	20% Dip	3% Undershoot
recovery	3 Sec	3 Sec
Rejection of rated load	20% Rise	4% Overshoot
recovery	3 Sec	3 Sec
Application of simulated motor load	40% Dip	
recovery	5 Sec	
Waveform		
Maximum Deviation Factor	5%	
Individual Harmonic	2%	
Regulation	3%	2-3% Adjustable

Adjustment Range for Standard Voltage Connections

120/208 V Corm: 60 Hz: 197 to 240 V. 50 Hz: 190 to 213 V.
240/416 V Corm: 60 Hz: 395 to 480 V. 50 Hz: 380 to 426 V.

Frequency Adjustment Range: 58 to 62 Hz. 48 to 52 Hz.

Source: https://assist.dla.mil -- Downloaded: 2016-12-11T08:39Z
Check the source to verify that this is the current version before use.

ENVIRONMENTAL DATA

Power Output at Environmental Conditions:

100 kW, 60 Hz: Sea level, minus 25° F (-31.7° C) to plus 125° F (+51.7° C)
5000 feet, minus 25° F (-31.7° C) to plus 107° F (+41.7° C)
83.3 kW, 50 Hz: Sea level, minus 25° F (-31.7° C) to plus 125° F (+51.7° C)
5000 feet, minus 25° F (-31.7° C) to plus 107° F (+41.7° C)
Winterization system extends lower temperature limit to minus 65° F (-53.9° C)

Shock and Rough Handling: 10 mph railroad impact. 12 inch end drop. Truck and trailer transportation.

Attitude: Operate with base level or inclined to more than 15 degrees from level.

Noise Level: 88 dbA @ 25 feet.

OPTIONAL EQUIPMENT

See 4.4.3 of MIL-STD-633 for additional information on optional equipment.

Description	NSN	Weight lbs (kg)	Effect on Dim (ins)
Wntzn Kit (Fuel Burning)	6115-00-463-9082	45 (20.4)	Int
Wntzn Kit (Electric)	6115-00-463-9084	40 (18.1)	Int
Wntzn Kit, Aux, Fuel Burning	6115-00-463-9098	350 (158.8)	Aux: (41x40x26)
Wntzn Kit, Aux, Elect.	6115-00-463-9099	260 (117.9)	Aux: (36x27x19)
Remote Control Box	6115-00-420-8490	8 (3.6)	Int
Load Bank	6115-00-463-9086	370 (167.8)	Ext: H+19
Wheel Mounting Kit	6115-00-463-9089	580 (263)	Ext: H+13,L+9,W+30
Panel, Auto, Load Transfer, 60 Hz	6115-00-477-7932	825 (374.2)	Aux: (44x19x42)
Paralleling Cable	6140-00-197-4934	4 (1.8)	Ext: L=300
Relay Assembly, Precise	6140-00-199-1616		Int

REFERENCE DOCUMENTS

Technical Manuals:

Army	Air Force	Marine Corps	Navy
TM	TO		NAVFAC
5-6115-457-12	35C2-3-442-l	TM-07464A-12	P-8-627-12
5-6115-457-24P	35C2-3-442-4	SL-4-07464A	P-8-627-24P
5-6115-457-34	35C2-3-442-2	TM-07464A-35	P-8-627-34

Source: https://assist.dla.mil -- Downloaded: 2016-12-11T08:39Z
Check the source to verify that this is the current version before use.

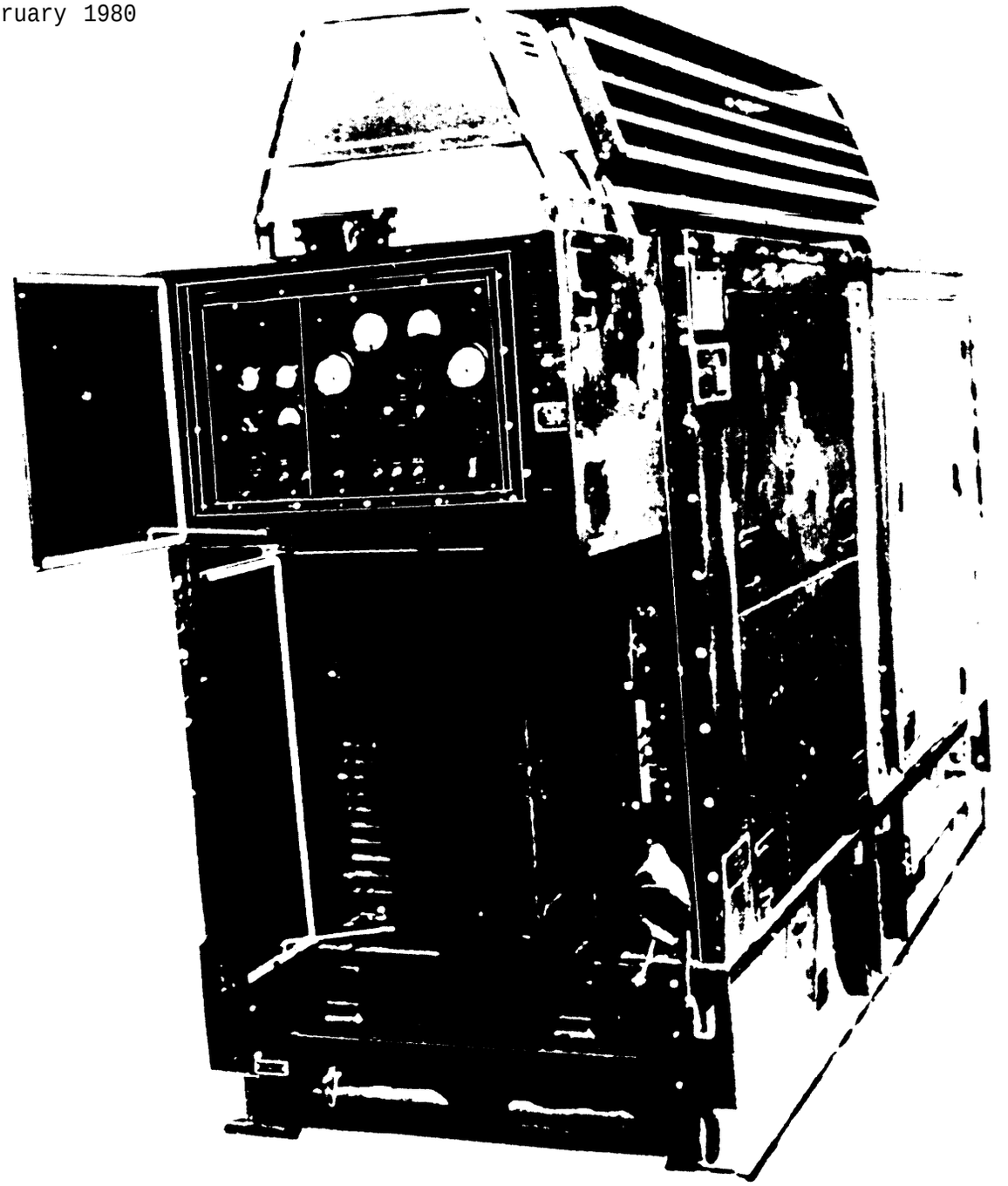

FIGURE 57. MEP-007A (100 kW, 50/60 Hz, DED). X-3585

Source: https://assist.dla.mil -- Downloaded: 2016-12-11T08:39Z
Check the source to verify that this is the current version before use.

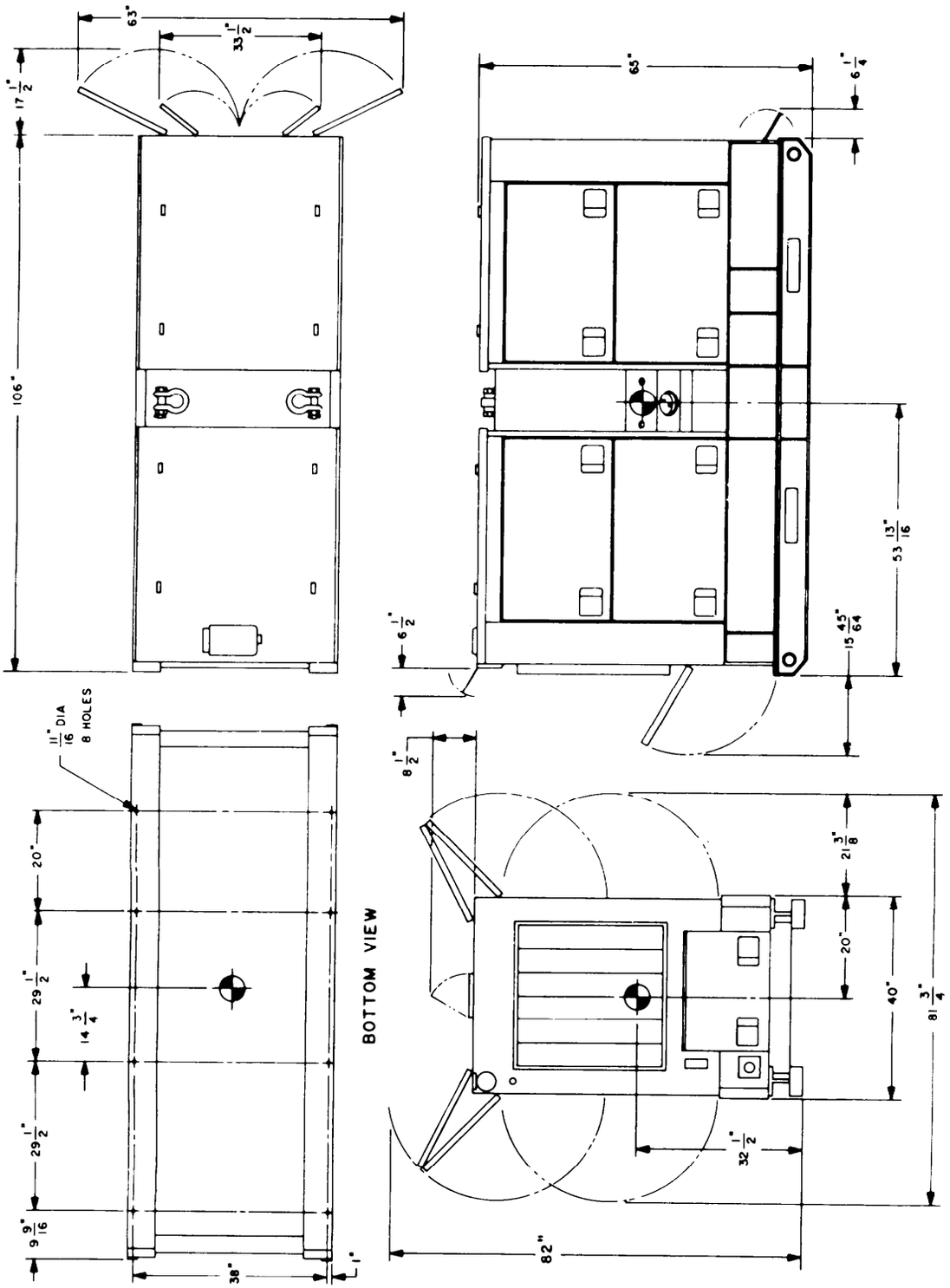

FIGURE 58. MEP-007A (100 kW, 50/60 Hz, DED).

X-3586

Source: https://assist.dla.mil -- Downloaded: 2016-12-11T08:39Z
Check the source to verify that this is the current version before use.

MILITARY STANDARD
MOBILE ELECTRIC POWER
ENGINE GENERATOR STANDARD FAMILY
MEP-106A, 100 kW, 50-60 Hz, DIESEL ENGINE-DRIVEN GENERATOR SET
CHARACTERISTICS DATA SHEET

CLASSIFICATION

Description: 100 kW @ 0.8 power factor, 50/60 Hz, 120/208 V, 240/416 V.

Model:	Mep-106A	Type:	I (tactical)
NSN:	6115-00-133-9102	Class:	1 (precise)
Spec:	MIL-G-52884/10	Mode:	I (50/60 Hz)

PHYSICAL CHARACTERISTICS

Dimensions: See Figures 59 and 60 on pages 191 and 192.

Weight: 6590 lbs (2990 kg).

Mobility: Fully housed. Mounted on skid base. Lifting and tie-down attachments provided. Fork lift provision.

Engine: Diesel, Std: MIL-STD-1410. Horsepower: 170 min @ 1800 RPM. No. of cyl: 6. Cycle 4. Liquid cooled. 24 VDC electric start. Operating speed: 50 Hz: 1500 RPM, 60 Hz: 1800 RPM. Fuel tank capacity: 90 gallons (approximately 8 hours at rated load). Fuel pump lift: 12 feet.

Fuel:
Primary: VV-F-800; Diesel Fuel Oil, types DF-1, DF-2 and DF-A.
Emergency Fuel: MIL-T-5624, Aviation Turbine Fuels, grades JP-4 and JP-5.

Electrical:
Drip proof generator enclosure. Capable of parallel operation. Fungus and moisture treatment.
Solid state voltage regulator. Brushless rotary exciter.

Voltage Connection: 60 Hz: 120/208 V, 3 phase, 4 wire. 240/416 V, 3 phase, 4 wire..
50 Hz: 120/208 V, 3 phase, 4 wire. 240/416 V, 3 phase, 4 wire.

Source: https://assist.dla.mil -- Downloaded: 2016-12-11T08:39Z
Check the source to verify that this is the current version before use.

Protective Devices: Short circuit protection. Overvoltage protection. Reverse power protection. Low oil pressure cut-off switch. High temperature cut-off switch. Low fuel level cut-off switch. Overspeed cut-off switch.

Instrumentation: Voltmeter. Frequency meter. Ammeter. Hourmeter. Wattmeter (% load). Oil pressure gage. Battery charging ammeter (% current). Fault indicating system. Coolant temperature indicator. Fuel level.

FUNCTIONAL/OPERATIONAL CHARACTERISTICS

Reliability: Mean Time Between Failures (MTBF): 580 hours (specified).

Fuel Consumption: 8.5 gph at rated load.

Electromagnetic Interference: Suppression to MIL-STD-451 limits.

	Voltage	Frequency
Steady State Stability (variation)		
Short Term (30 See)	1% Bandwidth	0.5% Bandwidth
Long Term (4 hours)	2% Bandwidth	1% Bandwidth
Transient Performance		
Application of rated load	15% Dip	4% Undershoot
recovery	0.5 Sec	2 Sec
Rejection of rated load	15% Rise	4% Overshoot
recovery	0.5 Sec	2 Sec
Application of simulated motor load	30% Dip	
recovery	0.7 Sec	
Waveform		
Maximum Deviation Factor	5%	
Individual Harmonic	2%	
Regulation	l%	0.25%

Adjustment Range for Standard Voltage Connections

120/208 V Corm: 60 Hz: 197 to 240 V. 50 Hz: 190 to 213 v.
240/416 V. Corm: 60 Hz: 395 to 480 V. 50 Hz: 380 to 426 V.

Frequency Adjustment Range: 58 to 62 Hz. 48 to 52 Hz.

Source: https://assist.dla.mil -- Downloaded: 2016-12-11T08:39Z
Check the source to verify that this is the current version before use.

ENVIRONMENTAL DATA

Power Output at Environmental Conditions:

100 kW, 60 Hz: Sea level, minus 25° F (-31.7° C) to plus 125° F (+51.7° C)
5000 feet, minus 25° F (-31.7° C) to plus 107° F (+41.7° C)
83.3 kW, 50 Hz: Sea level, minus 25° F (-31.7° C) to plus 125° F (+51.7° C)
5000 feet, minus 25° F (-31.7° C) to plus 107° F (+41.7° C)
Winterization system extends lower temperature limit to minus 65° F (-53.9° C)

Shock and Rough Handling: 10 mph railroad impact. 12 inch end drop. Truck and trailer transportation.

Attitude: Operate with base level or inclined no more than 15 degrees from level.

Noise Level: 91 dbA @ 25 feet.

OPTIONAL EQUIPMENT

See 4.4.3 of MIL-STD-633 for additional information on optional equipment.

DESCRIPTION	NSN	Weight lbs (kg)	Effect on Dim (ins)
Wntzn Kit (Fuel burning)	6115-00-463-9082	45 (20.4)	Int
Wntzn Kit (Electric)	6115-00-463-9084	40 (18.1)	Int
Wntzn Kit, Aux, Fuel Burning	6115-00-463-9098	350 (158.8)	Aux: (41x40x26)
Wntzn Kit, Aux, Elect.	6115-00-463-9099	260 (117.9)	Aux: (36x27x19)
Remote Control Box	6115-00-420-8490	8 (3.6)	Int
Load Bank	6115-00-463-9086	370 (167.8)	Ext: H+19
Wheel Mounting Kit	6115-00-463-9089	580 (263)	Ext: H+13,L+9,W+30
Panel, Auto, Load Transfer, 60 Hz	6115-00-477-7932	825 (374.2)	Aux: (44x19x42)

REFERENCE DOCUMENTS

Technical Manuals:

Army	Air Force	Marine Corps	Navy
TM	TO		NAVFAC
5-6115-457-12	35C2-3-442-1	TM-07464A-12	P-8-627-12
5-6115-457-24P	35C2-3-442-4	SL-4-07464A	P-8-627-24P
5-6115-457-34	35C2-3-442-2	TM-07464A-35	P-8-627-34

Source: https://assist.dla.mil -- Downloaded: 2016-12-11T08:39Z
Check the source to verify that this is the current version before use.

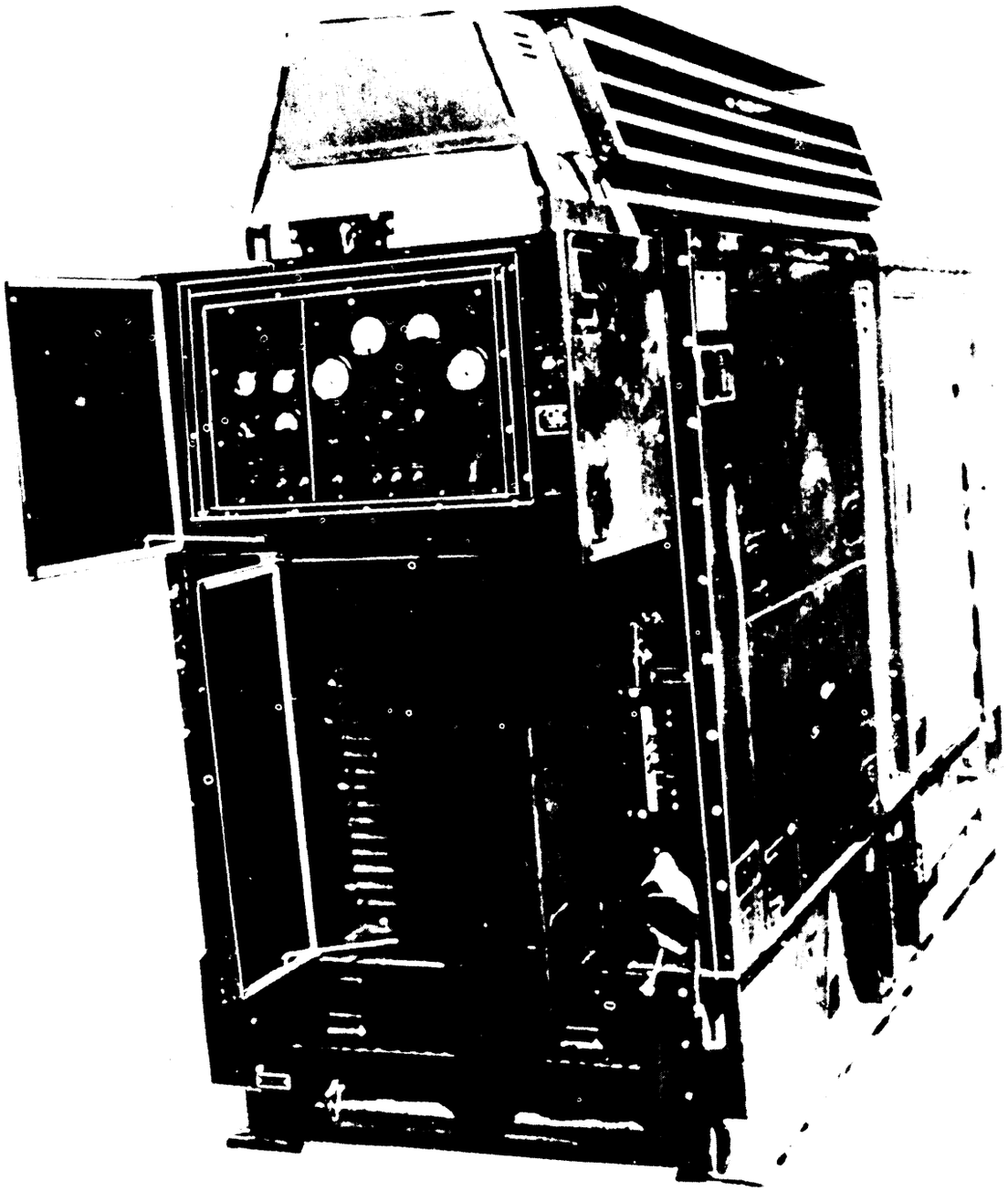

FIGURE 59. MEP-106A (100 kW, 50/60 Hz,DED). X-3587

Source: https://assist.dla.mil -- Downloaded: 2016-12-11T08:39Z
Check the source to verify that this is the current version before use.

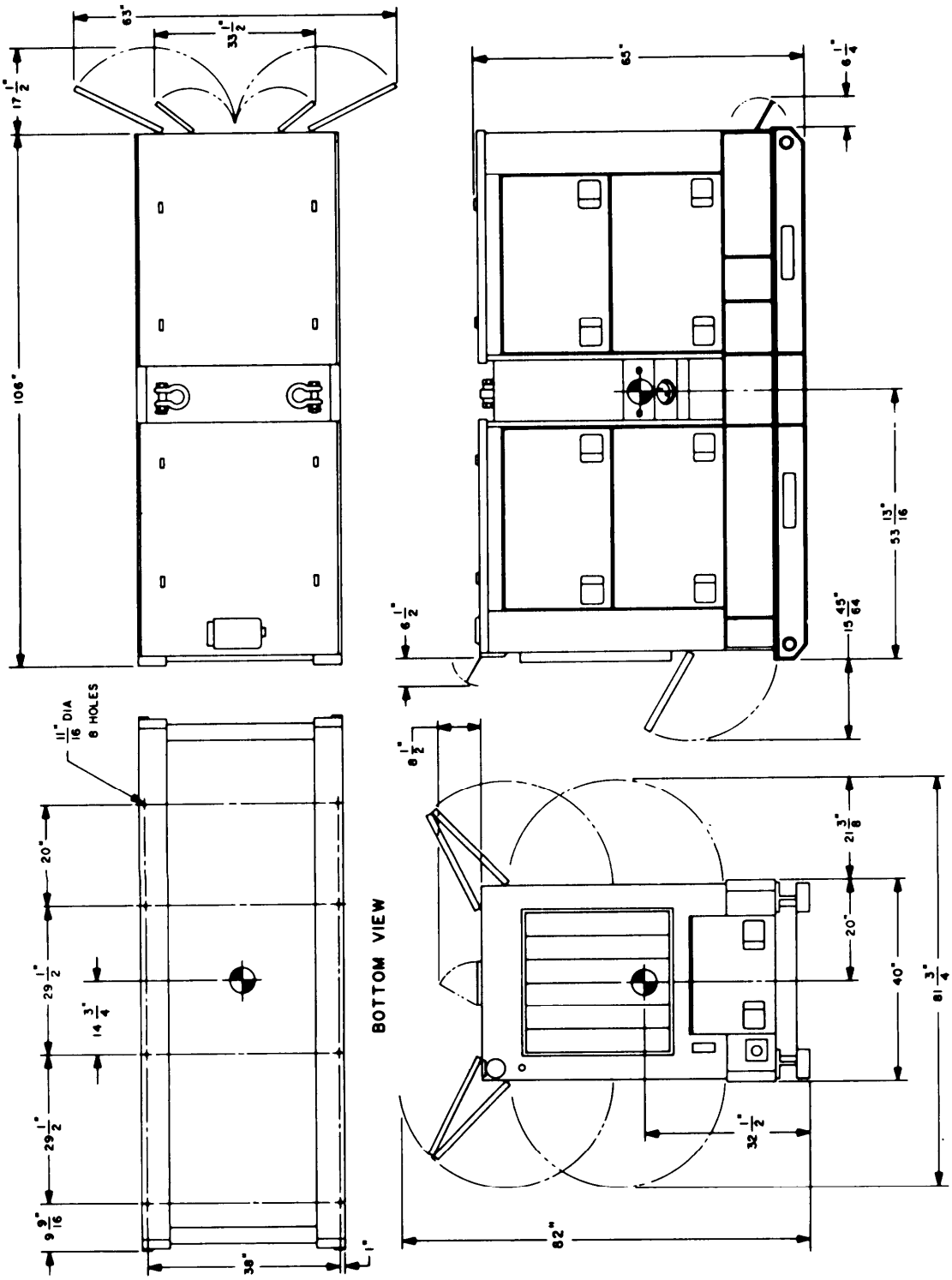

FIGURE 60. MEP-106A (100 kW, 50/60 Hz, DED).

Source: https://assist.dla.mil -- Downloaded: 2016-12-11T08:39Z
Check the source to verify that this is the current version before use.

MILITARY STANDARD
MOBILE ELECTRIC POWER
ENGINE GENERATOR STANDARD FAMILY
MEP-116A, 100 kW, 400 Hz, DIESEL ENGINE-DRIVEN GENERATOR SET
CHARACTERISTICS DATA SHEET

CLASSIFICATION

Description: 100 kW @ 0.8 power factor, 400 Hz, 120/208 V, 240/416 V

Model:	MEP-116A	Type:	I (tactical)
NSN:	6115-00-133-9103	Class:	1 (precise)
Spec:	MIL-G-52884/12	Mode:	II (400 Hz)

PHYSICAL CHARACTERISTICS

Dimensions: See Figures 61 and 62 on pages 196 and 197.

Weight: 6700 lbs (3040 kg).

Mobility: Fully housed. Mounted on skid base. Lifting and tie-down attachments provided. Fork lift provision.

Engine: Diesel, Std: MIL-STD-1410. Horsepower: 170 min @ 2000 RPM. No. of : 6. Cycle 4. Liquid cooled. 24 VDC electric start. Operating speed: 2000 RPM. Fuel tank capacity: 90 gallons (approx 8 hours at rated load). Fuel pump lift: 12 feet.

Fuel:
Primary: VV-F-800; Diesel Fuel Oil, types DF-1, DF-2 and DF-A.
Emergency Fuel: MIL-T-5624, Aviation Turbine Fuels, grades JP-4 and Jp-5.

Electrical:
Drip proof generator enclosure. Capable of parallel operation. Fungus and moisture treatment.
Solid state voltage regulator. Brushless rotary exciter.

Voltage Connection: 400 Hz: 120/208 V, 3 phase, 4 wire. 240/416 V, 3 phase, 4 wire.

Source: https://assist.dla.mil -- Downloaded: 2016-12-11T08:39Z
Check the source to verify that this is the current version before use.

Protective Devices: Short circuit protection. Overvoltage protection. Reverse power protection. Low oil pressure cut-off switch. High temperature cut-off switch. Low fuel level cut-off switch. Overspeed cut-off switch.

Instrumentation: Voltmeter. Frequency meter. Ammeter. Hourmeter. Wattmeter (% load). Oil pressure gage. Battery charging ammeter (% current). Fault indicating system. Coolant temperature indicator. Fuel level.

FUNCTIONAL/OPERATIONAL CHARACTERISTICS

Reliability: Mean Time Between Failures (MTBF): 580 hours (specified).

Fuel Consumption: 10 gph at rated load.

Electromagnetic Interference: Suppression to MIL-STD-461 limits.

	Voltage	Frequency
Steady State Stability (variation)		
Short Term (30 See)	1% Bandwidth	0.5% Bandwidth
Long Term (4 hours)	2% Bandwidth	1% Bandwidth
Transient Performance		
Application of’ rated load	12% Dip	4% Undershoot
recovery	0.5 Sec	2 Sec
Rejection of rated load	12% Rise	4% Overshoot
recovery	0.5 Sec	2 Sec
Application of simulated motor load	25% Dip	
recovery	0.7 Sec	
Waveform		
Maximum Deviation Factor	5%	
Individual Harmonic	2%	
Regulation	1%	0.25%

Adjustment Range for Standard Voltage Connections

120/208 v Corm: 400 Hz: 197 to 229 V.
240/416 V Corm: 400 Hz: 395 to 458 V.

Frequency Adjustment Range: 390 to 420 Hz.

Source: https://assist.dla.mil -- Downloaded: 2016-12-11T08:39Z
Check the source to verify that this is the current version before use.

ENVIRONMENTAL DATA

Power Output at Environmental Conditions:
100 kW, Hz: Sea level, minus 25° F (-31.7° C) to plus 125° F (+51.7° C)
5000 feet, minus 25° F (-31.7° C) to plus 107° F (+41.7° C)
Winterization system extends lower temperature limit to minus 650 F (-53.9° C)

Shock and Rough Handling: 10 mph railroad impact. 12 inch end drop. Truck and trailer transportation.

Attitude: Operate with base level or inclined no more than 15 degrees from level.

Noise Level: 91 dbA @ 25 feet.

OPTIONAL EQUIPMENT

See 4.4.3 of MIL-STD-633 for additional information on optional equipment.

Description	NSN	Weight lbs (kg)	Effect on Dim (ins)
Wntzn Kit (Fuel Burning)	6115-00-463-9082	45 (20.4)	Int
Wntzn Kit (Electric)	6115-00-463-9084	40 (18.1)	Int
Wntzn Kit, Aux, Fuel Burning	6115-00--463-9098	350 (158.8)	Aux: (41x40x26)
Wntzn Kit, Aux, Elect	6115-00-463-9099	260 (117.9)	Aux: (36x27x19)
Remote Control Box	6115-00-420-8490	8 (3.6)	Int
Load Bank	6115-00-463-9086	370 (167.8)	Ext: H+19
Wheel Mounting Kit	6115-00-463-9089	580 (263)	Ext: H+13,L+9,W+30
Panel, Auto Standby, 400 Hz	6115-00-463-9096	12 (5.4)	Int

REFERENCE DOCUMENTS

Technical Manuals:

Army	Air Force	Marine Corps	Navy
TM	TO		NAVFAC
5-6115-457-12	35C2-3-442-l	TM-07464A-12	P-8-627-12
5-6115-457-24P	35C2-3-442-4	SL-4-07464A	P-8-627-24P
5-6115-457-34	35C2-3-442-2	TM-07464A-35	P-8-627-34

Source: https://assist.dla.mil -- Downloaded: 2016-12-11T08:39Z
Check the source to verify that this is the current version before use.

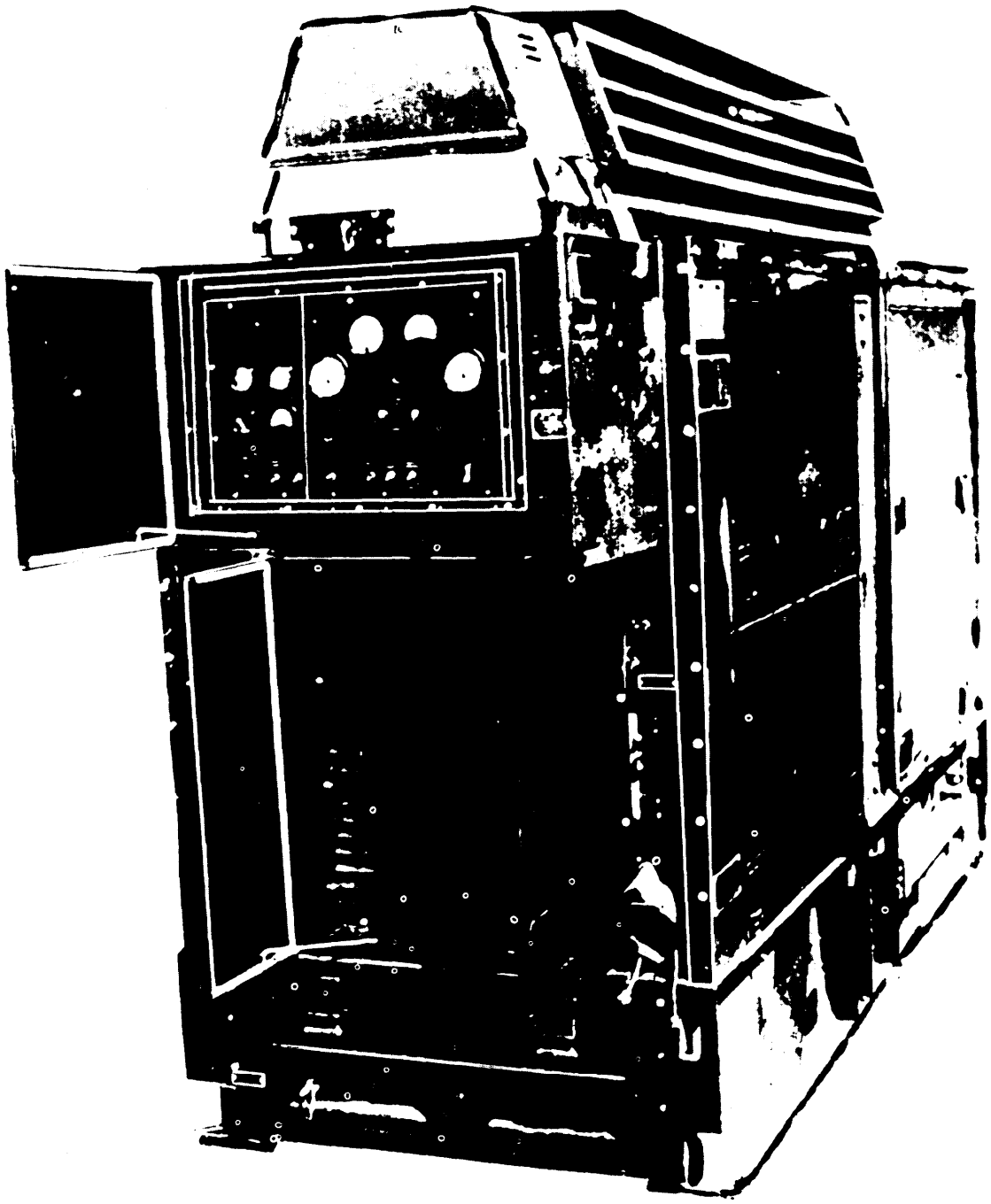

FIGURE 61. MEP-116A (100 kW, 400° Hz, DED).

X-3589

Source: https://assist.dla.mil -- Downloaded: 2016-12-11T08:39Z
Check the source to verify that this is the current version before use.

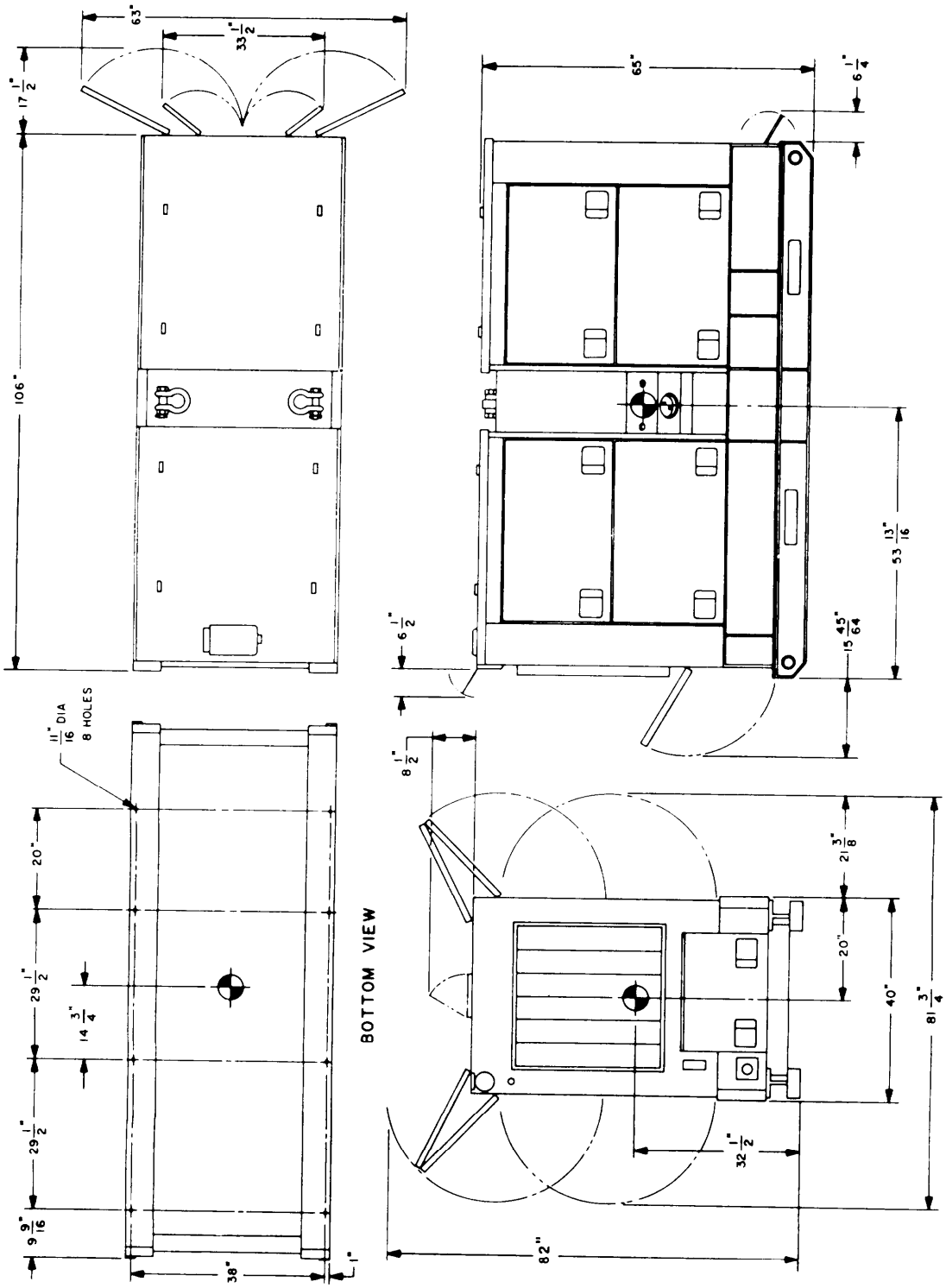

FIGURE 62. MEP-116A (100 kW, 400 Hz, DED).

X-3590

Source: https://assist.dla.mil -- Downloaded: 2016-12-11T08:39Z
Check the source to verify that this is the current version before use.

MILITARY STANDARD
MOBILE ELECTRIC POWER
ENGINE GENERATOR STANDARD FAMILY
MEP-009A, 200 kW, 50-60 Hz, DIESEL ENGINE-DRIVEN GENERATOR SET
CHARACTERISTICS DATA SHEET

CLASSIFICATION

Description: 200 kW @ 0.8 power factor, 50/60 Hz, 120/208 V, 240, 416 V.

Model:	MEP-009A	Type:	I (tactical)
NSN:	6115-00-133-9104	Class:	2 (utility)
Spec:	MIL-G-52884/14	Mode:	I (50/60 Hz)

PHYSICAL CHARACTERISTICS

Dimensions: See Figures 63 and 64 on pages 201 and 202.

Weight: 10,260 lbs (4654 kg).

Mobility: Fully housed. Mounted on skid base. Lifting and tie-down attachments provided. Fork lift provision.

Engine: Diesel, Std: MIL-STD-1410. Horsepower: 344 @ 1800 RPM. No. of cyl: 6. Cycle: 4. Liquid cooled. 24 VDC electric start. Operating speed: 50 Hz: 1500 RPM, 60 Hz: 1800 RPM. Fuel tank for 12 hours operation with a day tank. Fuel pump lift: 12 feet.

Fuel:
Primary: VV-F-800; Diesel Fuel Oil, types DF-1, DF-2 and DF-A, and MIL-F-16884 Marine Diesel Fuel Oil.
Emergency Fuel: MIL-T-5624, Aviation Turbine Fuels, grades JP-4 and JP-5.

Electrical:
Drip proof generator enclosure. Capable of parallel operation. Fungus and moisture treatment.
Solid state voltage regulator. Brushless rotary exciter.

Voltage Connection: 60 Hz: 120/208 V, 3 phase, 4 wire. 240/416 V, 3 phase, 4 wire.
50 Hz: 120/208 V, 3 phase, 4 wire. 240/416 V, 3 phase, 4 wire.

Source: https://assist.dla.mil -- Downloaded: 2016-12-11T08:39Z
Check the source to verify that this is the current version before use.

Protective Devices: Short circuit protection. Overvoltage protection. Reverse power protection. Low oil pressure cut-off switch. High temperature cut-off switch. Low fuel level cut-off switch. Overspeed cut-off switch.

Instrumentation: Voltmeter. Frequency meter. Ammeter. Hourmeter. Wattmeter (% load). Oil pressure gage. Battery charging ammeter (% current). Fault indicating system. Coolant temperature indicator. Fuel level.

FUNCTIONAL/OPERATIONAL CHARACTERISTICS

Reliability: Mean Time Between Failures (MTBF): 520 hours (specified).

Fuel Consumption: 10 gph at rated load.

Electromagnetic Interference: Suppression to MIL-STD-461 limits.

	Voltage	Frequency
Steady State Stability (variation)		
Short Term (30 See)	2% Bandwidth	2% Bandwidth
Long Term (4 hours)	4% Bandwidth	3% Bandwidth
Transient Performance		
Application of rated load	20% Dip	3% Undershoot
recovery	3 Sec	3 Sec
Rejection of rated load	20% Rise	4% Overshoot
recovery	3 Sec	3 Sec
Application of simulated motor load	40% Dip	
recovery	5 Sec	
Waveform		
Maximum Deviation Factor	5%	
Individual Harmonic	2%	
Regulation	3%	2-3% Adjustable

Adjustment Range for Standard Voltage Connection

120/208 v Corm:	60 Hz:	197 to 240 V.	50 Hz:	190 tO 213 v.
240/416 V Corm:	60 Hz:	395 to 480 V.	50 Hz:	380 to 426 V.

Frequency Adjustment Range: Low idle to 2250 ± 25 RPM.

ENVIRONMENTAL DATA

Power Output at Environmental Conditions:

200 kW, 60 Hz:	Sea level,	minus 25° F (-31.7° C) to plus 125° F (+51.7° C)
	5000 feet,	minus 25° F (-31.7° C) to plus 107° F (+41.7° C)
167 kW, 50 Hz:	Sea level,	minus 25° F (-31.7° C) to Plus 125° F (+51.7° C)
	5000 feet,	minus 25° F (-31.7° C) to plus 107° F (+41.7° C)

Winterization system extends lower temperature limit to minus 65° F (-53.9° C).

Source: https://assist.dla.mil -- Downloaded: 2016-12-11T08:39Z
Check the source to verify that this is the current version before use.

Shock and Rough Handling: 10 mph railroad impact. 12 inch end drop. Truck and trailer transportation.

Attitude: Operate with base level or inclined no more than 15 degrees from level.

Noise Level: 93 dbA @ 25 feet (estimate).

OPTIONAL EQUIPMENT

See 4.4.3 of MIL-STD-633 for additional information on optional equipment.

Description	NSN	Weight lbs (kg)	Effect on Dim (ins)
Wntzn Kit (Fuel Burning)	6115-00-403-3761	85 (38.6)	Int
Wntzn Kit (Electric)	6115-00-489-7285	45 (20.4)	Int
Wntzn Kit, Aux, Fuel Burning	6115-00-463-9098	350 (158.8)	Aux: (41x40x26)
Wntzn Kit, Aux, Elect	6115-00-463-9099	260 (117.9)	Aux: (36x27x19)
Remote Control Box	6115-00-420-8490	8 (3.6)	Int
Load Bank	6115-00-403-3762	580 (263.1)	Ext: (H+23)
Panel, Auto, Load Transfer, 60 Hz	6115-00-477-7932	825 (374.2)	Aux: (44x19x42)
Paralleling Cable	6140-00-197-4934	4 (1.8)	Aux: (L=300)
Relay Assembly, precise	6140-00-199-1616		Int

REFERENCE DOCUMENTS

Technical Manuals

Army	Air Force	Marine Corps	Navy
TM	TO		NAVFAC
5-6115-458-12	35C2-3-443-l	TM-07536A-12	P-8-629-12
5-6115-458-34	35C2-3-443-2	TM-07536A-35	P-8-629-34
5-6115-458-24P	35C2-3-443-4	SL-4-07536	P-8-629-24P

Source: https://assist.dla.mil -- Downloaded: 2016-12-11T08:39Z
Check the source to verify that this is the current version before use.

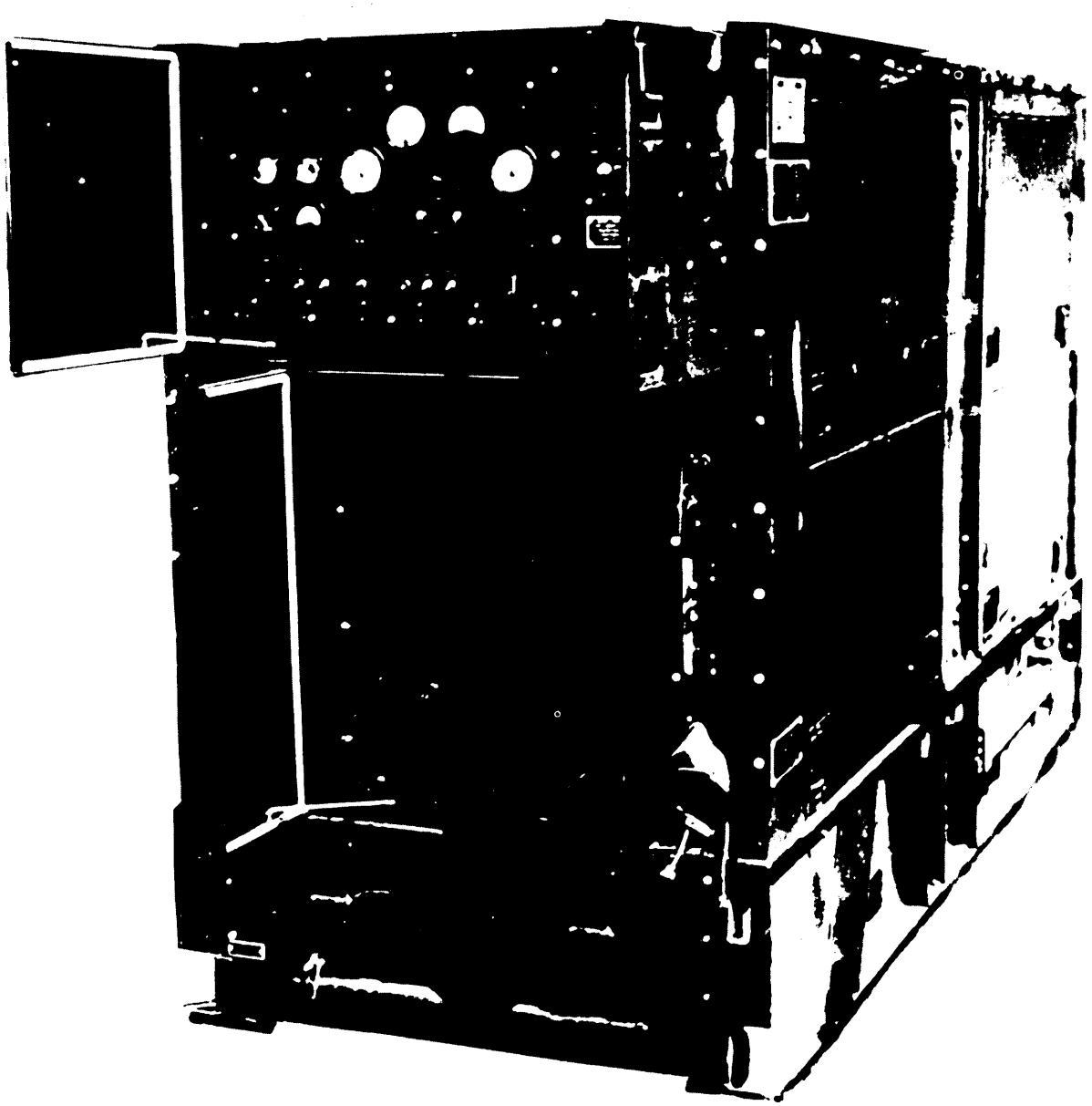

FIGURE 63. MEP-009A (200 kW, 50/60 Hz, DED).

X-3591

Source: https://assist.dla.mil -- Downloaded: 2016-12-11T08:39Z
Check the source to verify that this is the current version before use.

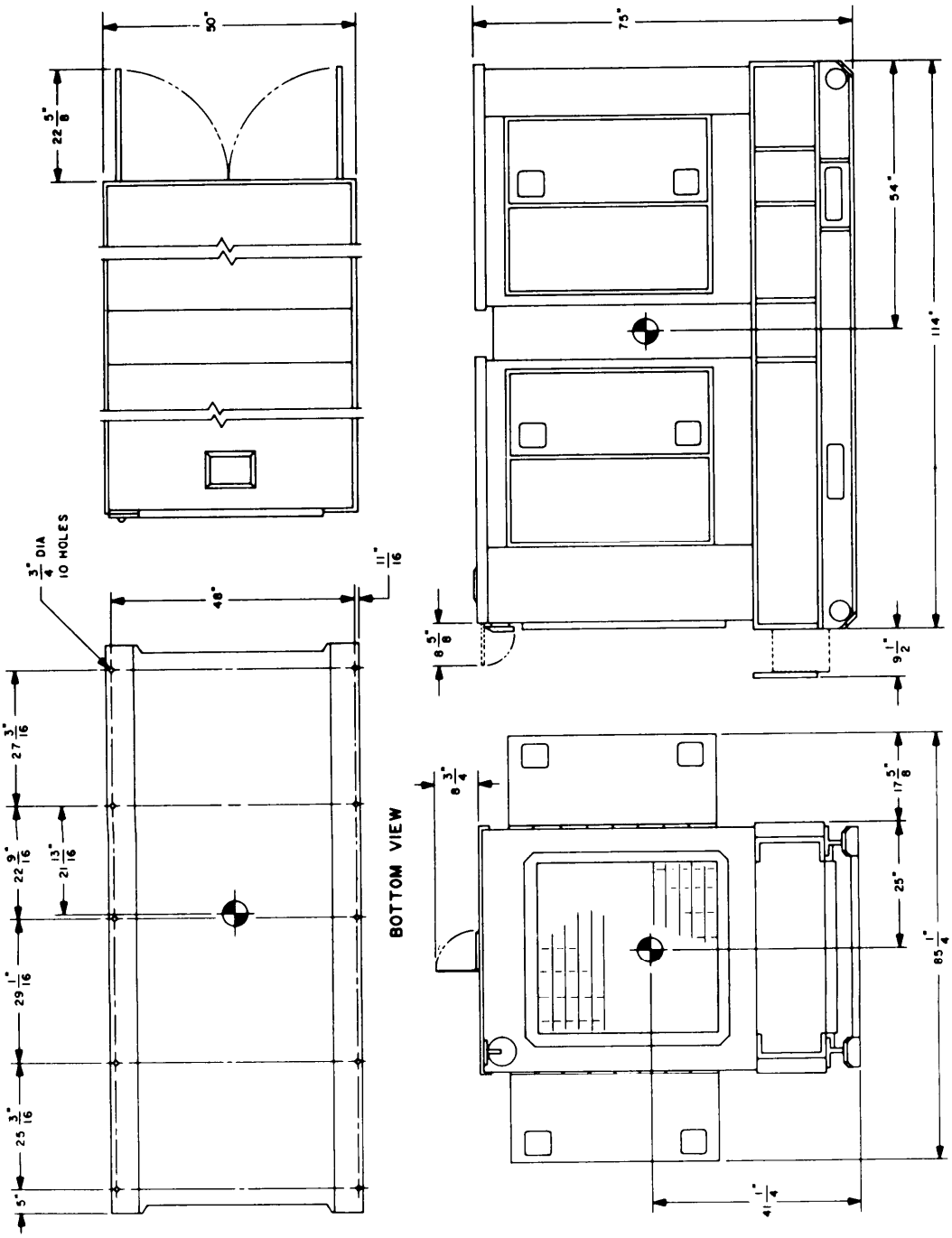

FIGURE 64. MEP-009A (200 kW, 50/60 Hz, DED).

X-3592

Source: https://assist.dla.mil -- Downloaded: 2016-12-11T08:39Z
Check the source to verify that this is the current version before use.

MILITARY STANDARD
MOBILE ELECTRIC POWER
ENGINE GENERATOR STANDARD FAMILY
MEP-108A, 200 kW, 50-60 Hz, DIESEL ENGINE-DRIVEN GENERATOR SET
CHARACTERISTICS DATA SHEET

CLASSIFICATION

Description: 200 kW @ 0.8 power factor, 50/60 Hz, 120/208 V, 240/416 V.

Model:	MEP-108A	Type:	I (tactical)
NSN:	6115-00-935-8729	Class:	1 (precise)
Spec:	MIL-G-52884/13	Mode:	I (50/50 Hz)

PHYSICAL CHARACTERISTICS

Dimensions: See Figures 65 and 66 on pages 206 and 2C

Weight: 10.350 lbs (4695 kg).

Mobility: Fully housed. Mounted on skid base. Lifting and tie-down attachments provided. Fork lift provision.

Engine: Diesel, Std: MIL-STD-1410 Horsepower: 344 @ 1800 RPM. No. of cyl: 6. Cycle: 4. Liquid cooled. 24 VDC electric start. Operating speed: 50 Hz: 1500 RPM, 60 Hz: 1800 RPM. Fuel tank for 12 hours operation with a day tank. Fuel pump lift: 12 feet.

Fuel:
Primary: VV-F-800; Diesel Fuel Oil, types DF-1, DF-2 and DF-A, and MIL-F-16884 Marine Diesel Fuel Oil.
Emergency Fuel: MIL-T-5624, Aviation Turbine Fuels, grades JP-4 and JP-5.

Electrical:
Drip proof generator enclosure. Capable of parallel operation. Fungus and moisture treatment.
Solid state voltage regulator. Brushless rotary exciter.

Voltage Connection:		
60 Hz:	120/208 V, 3 phase, 4 wire.	240/416 V, 3 phase, 4 wire.
50 Hz:	120/208 V, 3 phase, 4 wire.	240/416 V, 3 phase, 4 wire.

Source: https://assist.dla.mil -- Downloaded: 2016-12-11T08:39Z
Check the source to verify that this is the current version before use.

Protective Devices: Short circuit protection. Overvoltage protection. Reverse power protection. Low oil pressure cut-off switch. High temperature cut-off switch. Low fuel level cut-off switch. Overspeed cut-off switch.

Instrumentation: Voltmeter. Frequency meter. Ammeter. Hourmeter. Wattmeter (% load). Oil pressure gage. Battery charging ammeter (% current). Fault indicating system. Coolant temperature indicator. Fuel level.

FUNCTIONAL/OPERATIONAL CHARACTERISTICS

Reliability: Mean Time Between Failure (MTBF): 480 hours (specified).

Fuel Consumption: 16 gph at rated load.

Electromagnetic Interference: Suppression to MIL-STD-461 limits.

	Voltage	Frequency
Steady State Stability (variation)		
Short Term (30 See)	1% Bandwidth	0.5% Bandwidth
Long Term (4 hours)	2% Bandwidth	1% Bandwidth
Transient Performance		
Application of rated load	15% Dip	4% Undershoot
recovery	0.5 Sec	2 Sec
Rejection of rated load	15% Rise	4% Overshoot
recovery	0.5 Sec	2 Sec
Application of simulated motor load	30% Dip	
recovery	0.7 Sec	
Waveform		
Maximum Deviation Factor	5%	
Individual Harmonic	2%	
Regulation	1%	0.25%

Adjustment Range for Standard Voltage Connections:
120/208 v Corm: 60 Hz: 197 to 240 V. 50 Hz: 190 tO 213 v.
240/416 V Corm: 60 Hz: 395 to 480 V. 50 Hz: 380 to 426 V.

Frequency Adjustment Range: 58 to 62 Hz. 48 to 52 Hz.

ENVIRONMENTAL DATA

Power Output at Environmental Conditions:
200 kW, 60 Hz: Sea level, minus 25° F (-31.7° C) to plus 125° F (+51.7° C)
5000 feet, minus 25° F (-31.7° C) to plus 107° F (+41.7° C)
167 kW, 50 Hz: Sea level, minus 25° F (-31.7° C) to plus 125° F (+51.7° C)
5000 feet, minus 25° F (-31.7° C) to plus 107° F (+41.7° C)
Winterization system extends lower temperature limit to minus 65° F (-53.9° C)

Source: https://assist.dla.mil -- Downloaded: 2016-12-11T08:39Z
Check the source to verify that this is the current version before use.

Shock and Rough Handling: 10 mph railroad impact. 12 inch end drop. Truck and trailer transportation.

Attitude: Operate with base level or inclined no more than 15 degrees from level.

Noise Level: 93 dbA @ 25 feet (estimate).

OPTIONAL EQUIPMENT

See 4.4.3 of MIL-STD-633 for additional information on optional equipment.

Description	NSN	Weight lbs (kg)	Effect on Dim (ins)
Wntzn Kit (Fuel Burning)	6115-00-403-3761	85 (38.6)	Int
Wntzn Kit (Electric)	6115-00-489-7285	45 (20.4)	Int
Wntzn Kit, Aux, Fuel Burning	6115-00-463-9098	350 (158.8)	Aux: (41x40x26)
Wntzn Kit, Aux, Elect.	6115-00-463-9099	260 (11709)	Aux: (36x27x19)
Remote Control Box	6115-00-420-8490	8 (3.6)	Int
Load Bank	6115-00-403-3762	580 (263.1)	Ext: (H+23)
Panel, Auto, Load Transfer, 60 Hz	6115-00-477-7932	825 (374.2)	Aux: (44x19x42)

REFERENCE DOCUMENTS

Technical Manuals

Army	Air Force	Marine Corps	Navy
TM	TO		NAVFAC
5-6115-458-12	35C2-3-443-1	TM-07536A-12	P-8-629-12
5-6115-458-34	35C2-3-443-2	TM-07536A-35	P-8-629-34
5-6115-458-24P	35C2-3-443-4	SL-4-07536	P-8-629-24P

Source: https://assist.dla.mil -- Downloaded: 2016-12-11T08:39Z
Check the source to verify that this is the current version before use.

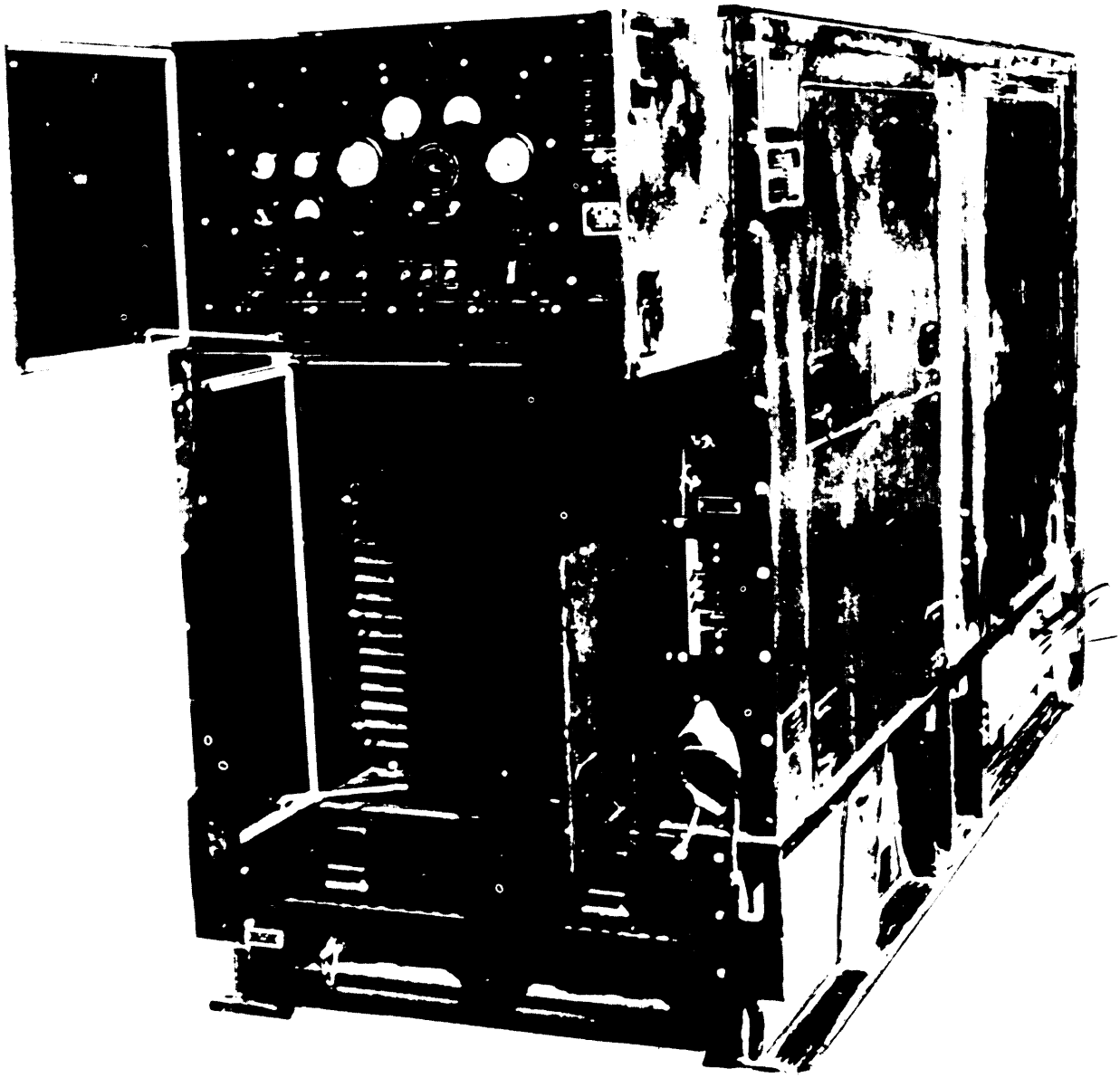

FIGURE 65. MEP-108A (200kw, 50/60 Hz, DED) .

X-3593

Source: https://assist.dla.mil -- Downloaded: 2016-12-11T08:39Z
Check the source to verify that this is the current version before use.

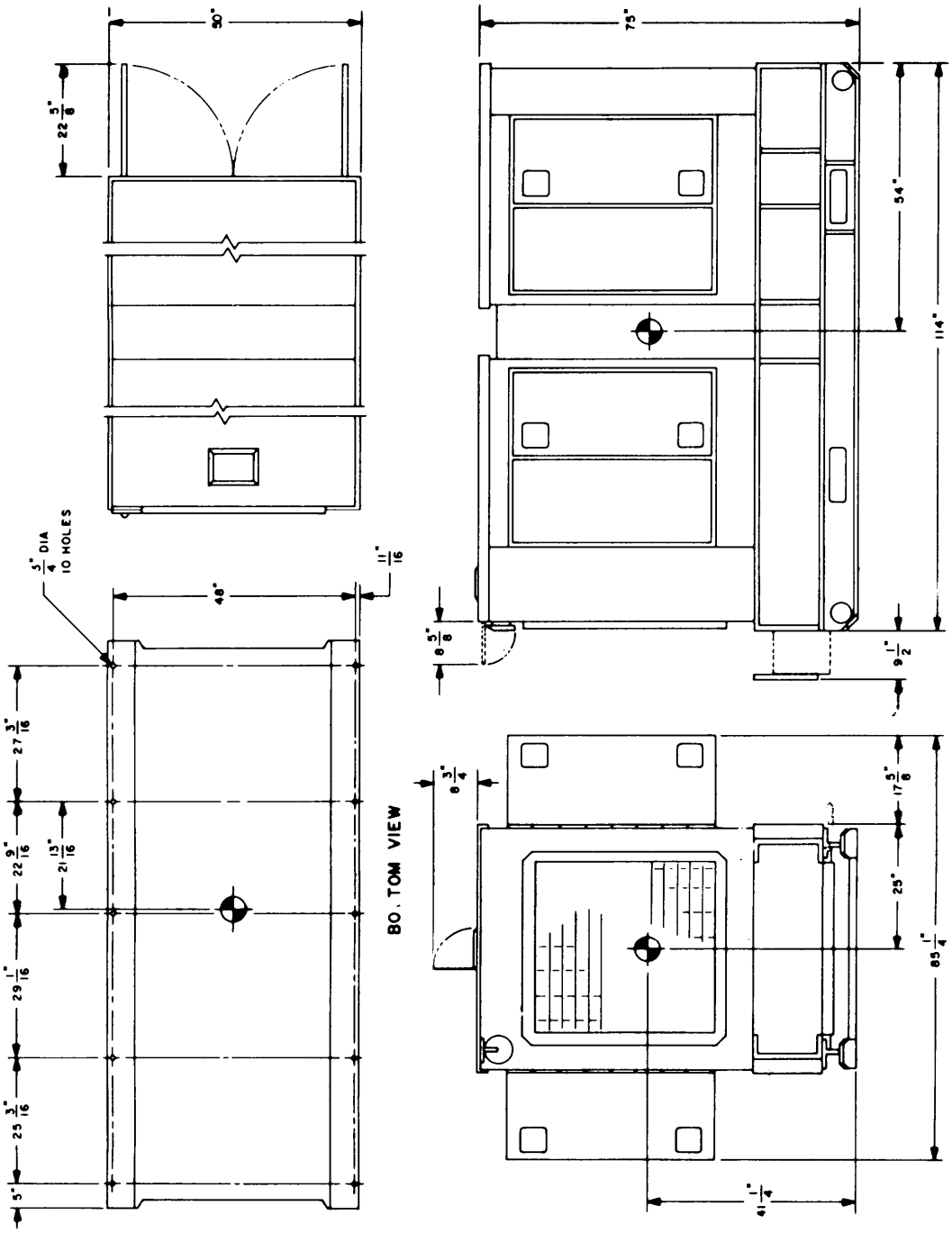

FIGURE 66. MEP-108A (200 kW, 50/60 Hz, DED).

X-3594

Source: https://assist.dla.mil -- Downloaded: 2016-12-11T08:39Z
Check the source to verify that this is the current version before use.

Source: https://assist.dla.mil -- Downloaded: 2016-12-11T08:39Z
Check the source to verify that this is the current version before use.

STANDARDIZATION DOCUMENT IMPROVEMENT PROPOSAL

OMB Approval
No. 22-R255

INSTRUCTIONS: The purpose of this form is to solicit beneficial comments which will help achieve procurement of suitable products at reasonable cost and minimum delay, or will otherwise enhance use of the document. DoD contractors, government activities, or manufacturers/vendors who are prospective suppliers of the product are invited to submit comments to the government. Fold on lines on reverse side, staple in corner, and send to preparing activity. Comments submitted on this form do not constitute or imply authorization to waive any portion of the referenced document(s) or to amend contractual requirements. Attach any pertinent data which may be of use in improving this document. If there are additional papers, attach to form and place both in an envelope addressed to preparing activity.

DOCUMENT IDENTIFIER AND TITLE MIL-STD-633E Mobile Electric Power Engine Generator Standard Family Gen Characteristics

NAME OF ORGANIZATION AND ADDRESS

CONTRACT NUMBER

MATERIAL PROCURED UNDER A

☐ DIRECT GOVERNMENT CONTRACT ☐ SUBCONTRACT

1. HAS ANY PART OF THE DOCUMENT CREATED PROBLEMS OR REQUIRED INTERPRETATION IN PROCUREMENT USE?

A. GIVE PARAGRAPH NUMBER AND WORDING.

B. RECOMMENDATIONS FOR CORRECTING THE DEFICIENCIES

2. COMMENTS ON ANY DOCUMENT REQUIREMENT CONSIDERED TOO RIGID

3. IS THE DOCUMENT RESTRICTIVE?

☐ YES ☐ NO *(If "Yes", in what way?)*

4. REMARKS

SUBMITTED BY *(Printed or typed name and address - Optional)*

TELEPHONE NO.

DATE

DD FORM 1 JAN 72 1426

REPLACES EDITION OF 1 JAN 66 WHICH MAY BE USED

Source: https://assist.dla.mil -- Downloaded: 2016-12-11T08:39Z
Check the source to verify that this is the current version before use.

FOLD

POSTAGE AND FEES PAID
DEPARTMENT OF THE ARMY
DOD-314

U.S.MAIL

OFFICIAL BUSINESS
PENALTY FOR PRIVATE USE 5300

Commander
US Army Mobility Equipment Research and
Development Command
DRDME-DE/DS
Ft.Belvoir, VA 22060

FOLD

Source: https://assist.dla.mil -- Downloaded: 2016-12-11T08:39Z
Check the source to verify that this is the current version before use.