METRIC
MIL-F-49291/6B
29 November 1994
SUPERSEDING
MIL-F-49291/6A
30 July 1992

MILITARY SPECIFICATION SHEET

FIBER, OPTICAL, TYPE I, CLASS I, SIZE IV, COMPOSITION A, WAVELENGTH B, RADIATION HARDENED (METRIC)

This specification is approved for use by all Departments and Agencies of the Department of Defense.

The requirements for acquiring the product described herein shall consist of this specification sheet and the issue of the following specification listed in that issue of the Department of Defense Index of Specifications and Standards (DODISS) specified in the solicitation: MIL-F-49291.

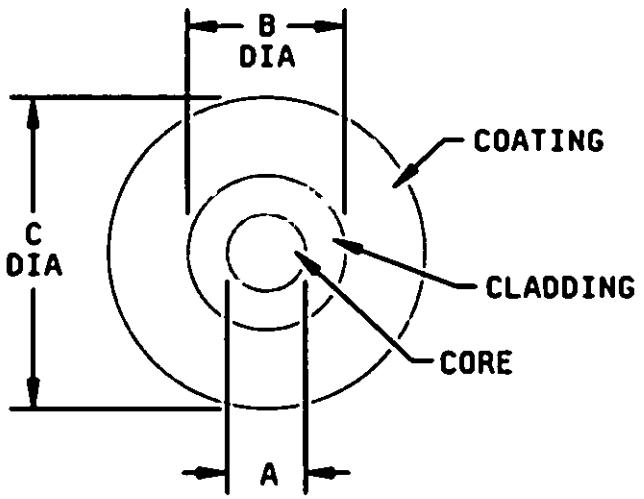

Fiber	PIN	Dimensions		
		A (µm)	B (µm)	C (µm)
Space qualified	M49291/6-02S	62.5 ± 3	125 ± 1	250 ± 15
Standard	M49291/6-03	62.5 ± 3	125 ± 1	250 ± 15
Space qualified	M49291/6-04S	62.5 ± 3	125 ± 1	500 ± 25
Standard	M49291/6-05	62.5 ± 3	125 ± 1	500 ± 25

FIGURE 1. Dimensions and configuration of optical fiber construction.

DISTRIBUTION STATEMENT A. Approved for public release; distribution is unlimited

Source: https://assist.dla.mil -- Downloaded: 2016-12-31T20:48Z
Check the source to verify that this is the current version before use.

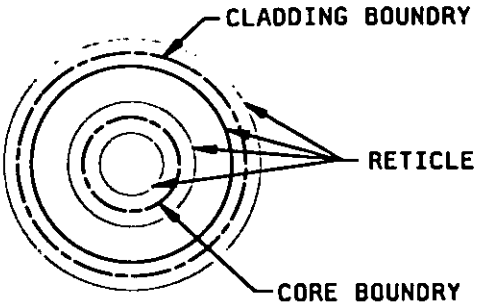

Circle (solid)	Diameter (μm)
Inner	59.5
Second	65.5
Third	124.0
Fourth	126.0

FIGURE 2. Tolerance fields.

DIMENSIONS AND CONFIGURATION:

Diameter: See figures 1 and 2. (Diameter requirements are based on selecting fibers with end-point tolerances of 125 ± 1 μm from production with a 125 ± 2 μm tolerance.)

Ovality:
Core: ≤ 6 percent.
Cladding: ≤ 2 percent.

Offset:
Core-to-cladding: ≤ 4 μm.
Fiber-to-coating: coating-cladding concentricity error ≤ 10.5 μm
(overall coating concentricity ratio (OCCR) ≥ 0.70 for 250 μm diameter coatings and ≥ 0.84 for 500 μm diameter coatings).

Splices: Not allowed.

Tensile strength (proof test): 690 MPa.

Fiber mass/unit length: 0.1 kg/km maximum.

Change in optical transmittance: Measurements to be made at 1300 ± 20 nm.

Maximum attenuation rate: 3.5 dB/km at 850 ± 20 nm
1.0 dB/km at 1300 ± 20 nm

Numerical aperture: 0.275 ± 0.015 at 850 nm ± 25 nm.

Bandwidth: ≥ 500 MHz/km at 1300 nm ±20 nm.

Chromatic dispersion: The zero dispersion wavelength shall be not less than 1320 nm and not greater than 1365 nm. The dispersion slope at the zero dispersion wavelength shall be not greater than 0.11 ps/nm^{2}km.

Transient Attenuation: ≤ 1.5 dB at 1300 nm.

Macrobend attenuation: Performed at 1300 ± 20 nm.

Source: https://assist.dla.mil -- Downloaded: 2016-12-31T20:48Z
Check the source to verify that this is the current version before use.

ENVIRONMENTAL:

Temperature range: See table I.

TABLE I. Temperature range.

PIN	Operating (°C)	Nonoperating (°C)	Storage (°C)
M49291/6-02S M49291/6-04S	-55 to +85	-62 to +85	-62 to +85
M49291/6-03 M49291/6-05	-46 to +85	-55 to +85	-55 to +85

Fluid immersion aging: Not applicable.

Dynamic tensile strength: Applicable.

Flexure: Applicable.

Fungus: Applicable.

Nuclear radiation resistance: Nuclear radiation resistance requirements and test conditions shall be as shown below and in tables II and III:

Light launch conditions: In accordance with EIA-455-50.
Wavelength: 1300 ± 25 nm.
Source type: LED with FWHM spectral width ≤ 160 nm.

TABLE II. Steady state gamma radiation test conditions.

PIN	Test Temperature (°C)	Dose rate	Total Dose (rad (Si))
M49291/6-02S M49291/6-04S	25 ±2 85 ±2	50 rad (Si)/min	10 krad (Si)
M49291/6-03 M49291/6-05	-28 ±2 25 ±2 85 ±2	50 +0, -20 rad (Si)/sec	Classified

(Some nuclear radiation resistance characteristics of this optical fiber are classified and shall be obtained from the qualifying activity. Application to receive these requirements must be made through the US Naval Sea Systems Command, ATTN: SEA 03K12, Washington, DC 20362. Information concerning security clearance classification and "need to know" must be detailed in the request.)

TABLE III. Steady state gamma radiation test requirements.

PIN	Maximum induced attenuation (dB/km)	Attenuation at specified recovery time (dB/km)	Specified recovery time (sec)
M49291/6-02S M49291/6-04S	≤ 6	≤ 5	10,000
M49291/6-03 M49291/6-05	≤ 50 1/	≤ 15 @ -28°C 1/ ≤ 5 @ 25°C ≤ 5 @ 85°C	1000

1/ The radiation induced loss for a given threat. The total dose associated with the threat is classified and not necessarily equal to the test total dose.

Source: https://assist.dla.mil -- Downloaded: 2016-12-31T20:48Z
Check the source to verify that this is the current version before use.

QUALITY CONFORMANCE:

In group A testing length may be measured using mechanical methods.

In group B testing the mechanical strippability test may be omitted if the optical fiber coatings have not changed from when the mechanical strippability test was last performed. The manufacturer shall provide a certificate of compliance for mechanical strippability in the group B test report.

The following additional requirements and tests are applicable to space qualified PIN:

a. Storage temperature: Applicable.
b. Thermal vacuum outgassing: Applicable.
c. Odor: Applicable.
d. Toxicity: Applicable.

Part or identifying number (PIN). (see figure 1 and table IV):

M49291/6-02S.
M49291/6-03.
M49291/6-04S.
M49291/6-05.

TABLE IV. Supersession data.

PIN	Superseding
M49291/6-02S	None
M49291/6-04S	None
M49291/6-03	D49291/01-006 1/
	M49291/6-01
	M49291/6-02
M49291/6-05	None

1/ PIN is as shown in MIL-F-49291/6(NAVY).

Source: https://assist.dla.mil -- Downloaded: 2016-12-31T20:48Z
Check the source to verify that this is the current version before use.

CONCLUDING MATERIAL

Custodians:
Army - CR
Navy - SH
Air Force - 85
NASA - NA

Review Activities:
Army - MI, SC
Navy - AS
Air Force - 17
DLA - ES

Preparing Activity:
Navy - SH

Agent:
DLA - ES

(Project 6010-0040-01)

Source: https://assist.dla.mil -- Downloaded: 2016-12-31T20:48Z
Check the source to verify that this is the current version before use.