MIL-STD-2163 A

3 FEBRUARY 1987

SUPERSEDING
MIL-STD-2163 (NAVY)
29 AUGUST 1983

MILITARY STANDARD

INSERT ARRANGEMENTS FOR MIL-C-28876 CONNECTORS,FIBER OPTIC, CIRCULAR, PLUG AND RECEPTACLE STYLE, MULTIPLE REMOVABLE TERMINI

AMSC N/A

FSC 6060

DISTRIBUTION STATEMENT A. **Approved for public release; distribution is unlimited.**

Source: https://assist.dla.mil -- Downloaded: 2016-12-31T21:34Z
Check the source to verify that this is the current version before use.

DEPARTMENT OF DEFENSE
WASHINGTON, DC 20301

Insert Arrangements For
MIL-C-28876, Connectors, Fiber Optic,
Circular, Plug and Receptacle Style,
Multiple Removable Termini

1. This military standard is approved for use by all Departments and Agencies of the Department of Defense.

2. Beneficial comments (recommendations, additions, deletions) and any pertinent data which may be of use in improving this document should be addressed to: Space and Naval Warfare Systems Command, ATTN: SPAWAR, Department of the Navy, Washington, DC 20363, by using the self-addressed Standardization Document Improvement Proposal (DD Form 1426) appearing at the end of this document or by letter.

Source: https://assist.dla.mil Downloaded: 2016-12-31T21:34Z
Check the source to verify that this is the current version before use.

CONTENTS

			Page
Paragraph	1.	SCOPE	1
	2.	REFERENCED DOCUMENTS	1
	2.1	Government documents	1
	2.1.1	Specifications	1
	2.2	Other publication	1
	2.3	Order of precedence	1
	3.	DEFINITIONS	2
	3.1	Terms	2
	4.	GENERAL REQUIREMENTS (Not applicable)	2
	5.	DETAILED REQUIREMENTS	2
	5.1	Dimensions	2
	5.2	Termini	2
	5.3	Marking	2
	5.4	Drawing note	2
	5.4.1	Termini locations	2
	6.	NOTES	2
	6.1	Changes from previous issue	2

FIGURES

Figure	1.	Two-position termini arrangement for shell size 11	3
	2.	Four-position termini arrangement for shell size 13	4
	3.	Six- and eight-position termini arrangement for shell size 15	5

Source: https://assist.dla.mil -- Downloaded: 2016-12-31T21:34Z
Check the source to verify that this is the current version before use.

1. SCOPE

1.1 This document covers insert arrangements for use with MIL-C-28876 circular, plug and receptacle style, multiple removable termini, fiber optic connectors.

2. APPLICABLE DOCUMENTS

2.1 Government documents.

2.1.1 Specifications. Unless otherwise specified, the following specifications of the issue listed in that issue of the Department of Defense Index of Specifications and Standards (DODISS) specified in the solicitation form a part of this standard to the extent specified herein.

SPECIFICATIONS

MILITARY

MIL-C-28876	-	Connectors, Fiber Optic, Circular, Plug and Receptacle Style, Multiple Removable Termini, General Specification For.
MIL-C-28876/16	-	Connectors, Fiber Optic, Environment Resisting, Pin Terminus.
MIL-C-28876/17	-	Connectors, Fiber Optic, Environment Resisting, Socket Terminus.
MIL-C-28876/18	-	Connectors, Fiber Optic, Environment Resisting, Dummy Terminus.

(Copies of the specifications required by contractors in connection with specific acquisition functions should be obtained from the contracting activity or as directed by the contracting activity.)

2.2 Other publication. The following document forms a part of this standard to the extent specified herein. Unless otherwise specified, the issue of the document which is DOD adopted shall be that listed in the issue of the DODISS specified in the solicitation. Unless otherwise specified, the issue of the document not listed in the DODISS shall be the issue of the non-Government document which is current on the date of the solicitation.

AMERICAN NATIONAL STANDARDS INSTITUTE (ANSI)

ANSI Y14.5 M-82 - Dimensioning and Tolerancing.

(Application for copies should be addressed to the American National Standards Institute, 1430 Broadway, New York, NY 10018.)

(Non-Government standards and other publications are normally available from the organizations which prepare or which distribute the documents. These documents also may be available in or through libraries or other informational services.)

2.3 Order of precedence. In the event of a conflict between the text of this standard and the references cited herein, the text of this standard shall take precedence.

Source: https://assist.dla.mil -- Downloaded: 2016-12-31T21:34Z
Check the source to verify that this is the current version before use.

3. DEFINITIONS

3.1 Terms. The terms used in this document are generally accepted by the fiber optic industry and are commonly used in fiber optic connector engineering practice.

4. GENERAL REQUIREMENTS

Not applicable.

5. DETAILED REQUIREMENTS

5.1 Dimensions. Dimensions shall be in accordance with the applicable section of this standard and the following dimensional data:

a. ∇ indicates the insulator indexing feature position and vertical centerline of insert arrangement.

b. Dimensioning and tolerancing in accordance with ANSI Y14.5 - M-82. (Dimensions are true position and are in inches.)

c. Metric equivalents (to the nearest 0.01 mm) are given in parentheses for general information only and are based upon 1.0 inch = 25.4 mm.

d. Dimensions and markings shown are for engaging face of socket insert (pin insert is opposite, right to left).

e. The following tolerances apply to insert installed in shell:

(1) The center of each hole in insert for epoxy terminus connectors shall be located at true position within .005 diameter [⌖|Ø.005].

(2) The center of engaging end of each terminus shall be located in true position within .010 diameter [⌖|Ø.010].

f. Unless otherwise indicated, dimensions are symmetrical about centerlines.

g. Each insert arrangement is shown in the "normal position" in the shell, with indexing feature at top of vertical centerline.

h. Shell polarization shall be in accordance with figure 5 of MIL-C-28876.

5.2 Termini. Termini shall be in accordance with MIL-C-28876/16, MIL-C-28876/17, and MIL-C-28876/18.

5.3 Marking. Marking shall be in accordance with MIL-C-28876.

5.4 Drawing note. The following information is applicable to all sections of this document.

5.4.1 Termini locations. All termini locations are given.

6. NOTES

6.1 Changes from previous issue. Asterisks are not used in this revision to identify changes with respect to the previous issue due to the extensiveness of the changes.

Source: https://assist.dla.mil -- Downloaded: 2016-12-31T21:34Z
Check the source to verify that this is the current version before use.

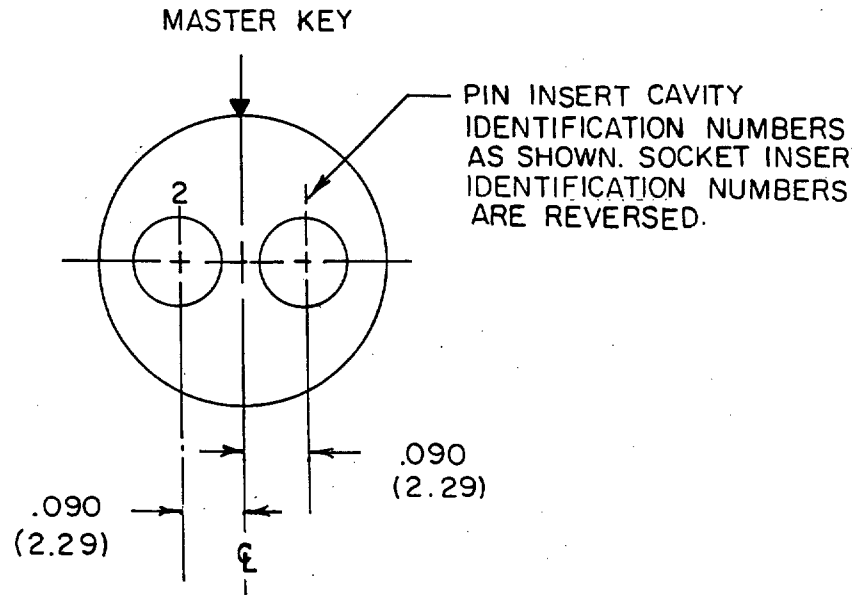

Shell size	Shell size designator	Arrangement number	Number of termini	Termini size
11	A	1	2	16

NOTES:
1. Dimensions are in inches.
2. Metric equivalents are given for general information only.
3. Metric equivalents are in parentheses.

FIGURE 1. Two-position termini arrangement for shell size 11.

Source: https://assist.dla.mil -- Downloaded: 2016-12-31T21:34Z
Check the source to verify that this is the current version before use.

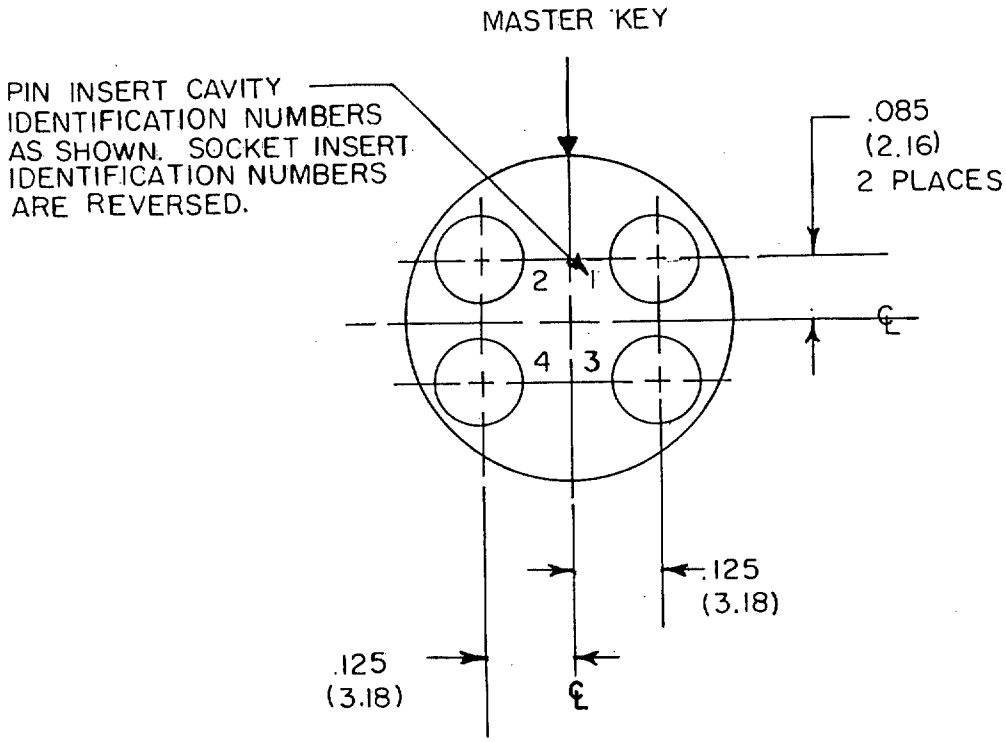

Shell size	Shell size designator	Arrangement number	Number of termini	Termini size
13	B	1	4	16

NOTES:
1. Dimensions are in inches.
2. Metric equivalents are given for general information only.
3. Metric equivalents are in parentheses.

FIGURE 2. Four-position termini arrangement for shell size 13.

Source: https://assist.dla.mil -- Downloaded: 2016-12-31T21:34Z
Check the source to verify that this is the current version before use.

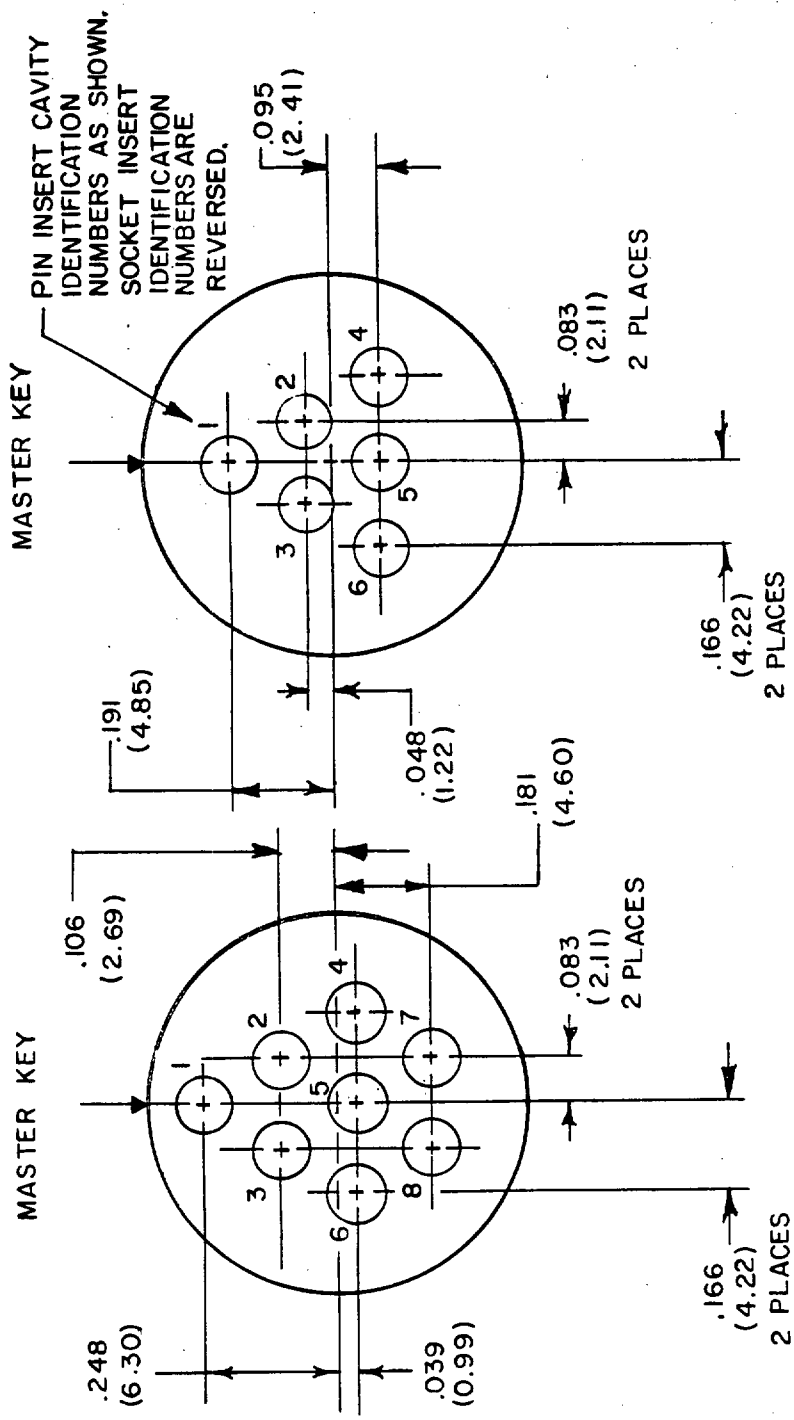

Shell size	Shell size designator	Arrangement number	Number of termini	Termini size
15	C	1	8	16
		2	6	

NOTES:
1. Dimensions are in inches.
2. Metric equivalents are given for general information only.
3. Metric equivalents are in parentheses.

FIGURE 3. Six- and eight-position termini arrangement for shell size 15.

Source: https://assist.dla.mil -- Downloaded: 2016-12-31T21:34Z
Check the source to verify that this is the current version before use.

Custodians:
Army - CR
Navy - EC
Air Force - 85

Review activities:
Army - MI
Navy - AS, MC, SH
Air Force - 11, 17, 19, 80, 90, 99
DLA - ES

User activities:
Navy - OS, YD
Air Force - 13, 14

Preparing activity:
Navy - EC

Agent:
DLA - ES

(Project 6060-0047)

Source: https://assist.dla.mil -- Downloaded: 2016-12-31T21:34Z
Check the source to verify that this is the current version before use.

(TO DETACH THIS FORM, CUT ALONG THIS LINE.)

STANDARDIZATION DOCUMENT IMPROVEMENT PROPOSAL

(See Instructions – Reverse Side)

1. DOCUMENT NUMBER	2. DOCUMENT TITLE
MIL-STD-2163A	INSERT ARRANGEMENTS FOR MIL-C-28876, CONNECTORS, FIBER OPTIC, CIRCULAR, PLUG AND RECEPTACLE SYTLES, MULTIPLE REMOVA-

3a. NAME OF SUBMITTING ORGANIZATION	4. TYPE OF ORGANIZATION *(Mark one)*
BLE TERMINI	☐ VENDOR
b. ADDRESS *(Street, City, State, ZIP Code)*	☐ USER ☐ MANUFACTURER ☐ OTHER *(Specify)*: _____

5. PROBLEM AREAS

a. Paragraph Number and Wording:

b. Recommended Wording:

c. Reason/Rationale for Recommendation:

6. REMARKS

7a. NAME OF SUBMITTER *(Last, First, MI)* – Optional	b. WORK TELEPHONE NUMBER *(Include Area Code)* – Optional
c. MAILING ADDRESS *(Street, City, State, ZIP Code)* – Optional	8. DATE OF SUBMISSION *(YYMMDD)*

DD FORM 82 MAR 1426 PREVIOUS EDITION IS OBSOLETE.

Source: https://assist.dla.mil -- Downloaded: 2016-12-31T21:34Z
Check the source to verify that this is the current version before use.