MIL-S-3950F
14 FEB 1976
SUPERSEDING
MIL-S-3950E
16 March 1972

MILITARY SPECIFICATION

SWITCHES, TOGGLE, ENVIRONMENTALLY SEALED, GENERAL SPECIFICATION FOR

This specification is approved for use by all Departments and Agencies of the Department of Defense.

1. SCOPE

1.1 This specification covers the military requirements for environmentally sealed toggle switches.

2. APPLICABLE DOCUMENTS

2.1 The following documents, of the issue in effect on the date of invitation for bids or request for proposal, form a part of this specification to the extent specified herein:

SPECIFICATIONS

FEDERAL

ZZ-R-765	- Rubber, Silicone, Low and High-Temperature and Tear Resistant.

MILITARY

MIL-M-14	- Molding Plastic and Molded Plastic Parts, Thermosetting.
MIL-P-997	- Plastic Material, Laminated, Thermosetting, Electrical-Insulating; Sheets, Glass Cloth, Silicone Resin.
MIL-W-5086	- Wire, Electrical, Hook-up and Interconnecting, Polyvinyl Chloride Insulation, Nylon Jacket, Tin-Coated Copper Conductor, 600 volt, 105°C.
MIL-T-5624	- Turbine Fuel, Aviation, Grades JP-4 and JP-5.
MIL-L-7808	- Lubricating Oil, Aircraft Turbine Engine, Synthetic Base.
MIL-T-7928	- Terminals, Lug and Splice, Crimp-Style, Copper.
MIL-E-9500	- Ethylene Glycol, Technical.
MIL-F-14256	- Flux, Soldering, Liquid (Rosin Base).
MIL-P-15037	- Plastic Sheet, Laminated, Thermosetting, Glass Cloth, Melamine-resin.
MIL-F-15160/2	- Fuses, Instrument, Power and Telephone.
MIL-P-18177	- Plastic Sheet, Laminated, Thermosetting, Glass Fiber Base, Epoxy-resin.
MIL-S-28786	- Switches, Preparation for Delivery of.
MIL-C-45662	- Calibration System Requirements.
MIL-I-81023	- Inductor, 28V DC Laboratory Test, General Specification for.

STANDARDS

FEDERAL

FED-STD-406	Plastic, Methods of Testing.

FSC 5930

Source: https://assist.dla.mil -- Downloaded: 2016-11-13T02:14Z
Check the source to verify that this is the current version before use.

STANDARDS

MILITARY

MIL-STD-105	- Sampling Procedures and Tables for Inspection by Attributes.
MIL-STD-202	- Test Methods for Electronic and Electrical Component Parts.
MIL-STD-1285	- Marking of Electrical and Electronic Parts.
MIL-STD-1549	- Common Termination System for Electrical and Electronic Parts.

For applicable switch MS Military Standards covered by this specification see Supplement 1.

(Copies of specification, standards, drawings, and publications required by suppliers in connection with specific procurement functions should be obtained from the procuring activity or as directed by the Contracting Officer.)

2.2 Other publications. The following document forms a part of this specification to the extent specified herein. Unless otherwise specified the issue in effect on date of invitation for bids or request for proposal shall apply.

NATIONAL BUREAU OF STANDARDS

Handbook H28 - Screw-Thread Standards for Federal Services.

(Application for copies should be addressed to the Superintendent of Documents, Government Printing Office, Washington DC 20402.)

3. REQUIREMENTS

3.1 MS military standards or military specification sheets. Individual switch requirements shall be as specified herein and in accordance with the applicable MS military standard or military specification sheet. In the event of any conflict between the requirements of this specification and the MS military standard or military specification sheet, the latter shall govern.

3.2 Switch categories. Switches furnished under this specification shall be category I, II, III, as defined in 3.2.1, 3.2.2, or 3.2.3 respectively.

3.2.1 Category I switches. Switches completely defined by a MS military standard or military specification sheet (see 3.1).

3.2.2. Category II switches (see 6.2.2). Switches the same as category I switches except for minor differences such as termination configuration, operating characteristics, and minor actuator variations, which do not change the basic design or construction of the qualified switch. Category II switches shall be procured from a source listed on the qualified products list for the particular similar product in category I. Category II switches are nonstandard.

3.2.3 Category III switches (see 6.2.3). Switches not covered by MS military standards or military specification sheets. These switches are nonstandard.

3.3 Qualification. Category I switches furnished under this specification shall be products which are qualified for listing on the applicable qualified products list at the time set for opening of bids.

3.4 Material. Material shall be as specified herein unless otherwise approved by the preparing activity. When a definite material is not specified, a suitable material shall be used which enables the switches to conform to the performance requirements of this specification. Acceptance or approval of any constituent material shall not be construed as a guaranty of the acceptance of the finished product

Source: https://assist.dla.mil -- Downloaded: 2016-11-13T02:14Z
Check the source to verify that this is the current version before use.

3.4.1 Metals. All metal parts, other than current-carrying parts, shall be o corrosion-resistant material, or shall be suitably protected to resist corrosion. is not acceptable for corrosion protection. Ferrous material shall not be used for current-carrying parts.

3.4.1.1 Dissimilar metals. When dissimilar metals are used in intimate conta with each other, protection against electrolysis and corrosion shall be provided. use of dissimilar metals which, in contact, tend toward active electrolytic corrosi (particularly brass, copper, or steel used in contact with aluminum or aluminum all is not acceptable. However, metal plating or metal spraying of dissimilar base met to provide similar or suitable abutting surfaces is permitted. The use of dissimil metals separated by a suitable insulating material is also permitted. Dissimilar m and compatible couples are defined in 6.7 through 6.7.4 inclusive, and table V.

3.4.2 Plastic materials. Unless otherwise specified, (see 3.1), molded plast material shall conform to MIL-M-14, and laminated plastic material shall conform to MIL-P-997, MIL-P-18177, or MIL-P-15037; however, stacked laminations shall not be u for the switch body. Other types of plastic materials may be used provided the man facturer submits acceptable evidence of performance to the preparing activity durin the qualification test program on the submitted product. The plastic material used all external switch parts and enclosures shall be self-extinguishing when tested in accordance with Method 2021 or 2022 of FED-STD-406, as applicable, to the thinnest section of the material used. The self-extinguishing requirement applies to all materials for external parts and enclosures regardless of whether the material used is procured to a military specification or not.

3.4.3 Elastomer seals. The material for all elastomer seals shall be silicon rubber in accordance with ZZ-R-765. Other types of silicone rubber may be used pro the manufacturer submits acceptable evidence of performance to the preparing activi during the qualification test program on the submitted product.

3.5 Design and construction. Switches shall be of the design, construction, and physical dimensions specified (see 3.1 and 3.2).

3.5.1 Toggle lever. The toggle lever shall be metal, shall have a lusterless finish, and shall be insulated from all current-carrying parts.

3.5.2 Attitude. Switches shall be constructed so as to assure proper operati when mounted in any position.

3.5.3 Terminals. Terminals shall be as specified (see 3.1). Only the number terminals required to accomplish the circuit characteristic shall be furnished.

3.5.3.1 Solderable terminals. Solderable terminals shall be treated to facil soldering. Silver plating shall not be used as the external coating. When gold pl is used because the terminals are integral with the gold contacts, its thickness sh be a minimum of 30 millionths of an inch and a maximum of 100 millionths of an inch Terminals shall be designed so that wires can be mechanically secured prior to sold Terminals may be tapped or drilled after coating.

3.5.3.2 Screw terminals. Screw terminals shall be provided with the hardware specified (see 3.1 and the appendix herein).

3.5.3.3 Integrated wire termination Switches with integrated wire terminati shall be designed in accordance with MIL-STD-1549.

Source: https://assist.dla.mil -- Downloaded: 2016-11-13T02:14Z
Check the source to verify that this is the current version before use.

3.5.4 Mounting bushing. The mounting bushing shall be as specified (see 3.1). The bushing shall be provided with a seal between the toggle lever and the switching mechanism. The body of the elastomer seal shall not protrude from the top of the mounting bushing with the exception of the tapered joint or meniscus where the seal joins the toggle lever, which may be permitted to exceed the height of the mounting bushing slightly.

3.5.5 Hardware. For direct Government procurement, all hardware (see 3.1), mounting and terminal, shall be supplied in a separate package and packaged with the switch. QPL sources may provide switches to sources, other than the Government, without hardware and may mark these switches with the appropriate MS or M part number.

3.5.5.1 Mounting hardware. The mounting hardware shall be as specified (see 3.1).

3.5.5.2 Terminal hardware. The terminal hardware shall be as specified (see 3.1)

3.5.6 Anti-rotational means. All switches shall be designed to have an anti-rotational mounting means which shall be as specified (see 3.1).

3.5.7 Screw threads. Screw threads on external threaded parts shall be in accordance with Handbook H28. Threading of nonmetallic parts shall not be permitted. Terminal thread engagement shall be at least two full threads.

3.5.8 Solder. Where solder is employed, flux shall be in accordance with MIL-F-14256. Solder shall not be used to obtain mechanical strength.

3.5.9 Weight. Weight shall be as specified (see 3.1).

3.6 Performance.

3.6.1 Solderability (applicable to solderable terminals). When switches are tested as specified in 4.8.2, 95 percent of the total length of fillet between the standard wrap wire and the terminal shall be tangent to the surface of the terminal being tested. There shall be no pinholes or voids. A ragged or interrupted line at the point of tangency between the fillet and the terminal under test shall be considered a failure. At the conclusion of the test, there shall be no fracture, loosening of parts or any other mechanical failure.

3.6.2 Resistance to soldering heat (applicable to solderable terminals). When switches are tested as specified in 4.8.3, the switches shall remain operable. When opened, there shall be no internal deformation or damage.

3.6.3 Switching characteristics. When tested as specified in 4.8.4, switches shall operate as specified (see 3.1).

3.6.4 Strength of terminals. When switches are tested as specified in 4.8.5, there shall be no breakage, loosening, or rotating of terminals, and no damage to the switch body.

3.6.5 Strength of toggle lever, pivot, and lever stop. When switches are tested, as specified in 4.8.6, there shall be no malfunction damage, breakage, or short circuit, switches shall operate mechanically and electrically.

3.6.6 Strength of mounting bushing. When switches are tested as specified in 4.8.7, there shall be no loosening of the mounting bushing or other mechanical damage

Source: https://assist.dla.mil -- Downloaded: 2016-11-13T02:14Z
Check the source to verify that this is the current version before use.

3.6.7 Contact voltage drop When switches are tested as specified in 4.8 8, the contact voltage drop shall not exceed 2.5 millivolts initially and 5 millivolts after mechanical endurance.

3.6.8 Dielectric withstanding voltage. When switches are tested as specified in 4.8.9, the switches shall withstand the application of the specified voltages without arcing, flashover, breakdown of insulation, or damage; there shall be no momentary flashover or leakage current in excess of five hundred microamperes.

3.6.9 Mechanical endurance. When switches are tested as specified in 4.8.10, there shall be no deterioration of the toggle seal, mechanical breakage, or malfunction. Circuitry and degree of toggle lever movement shall be as specified (see 3.1).

3.6.10 Electrical overload, electrical endurance, intermediate current, low level life, and temperature rise. When switches are tested as specified in 4.8.11, each pair of switch contacts under test shall open and close the circuit in proper sequence during each cycle of the switch actuating member. There shall be no malfunction or damage during or after the test, and any blown fuse or tripped circuit breaker (see 4.8.11), shall constitute failure. When switches are tested as specified in 4.8.11.7, the temperature rise of the switch terminals shall not exceed 50°C. At the conclusion of the test, switches shall be electrically and mechanically operable while controlling the test load, at the test environment and at room conditions. Electrical tolerances are as follows:

Voltage	±5 percent for 28 V, 125 V, and 250 V, DC
	±7 percent for 125 V and 250 V; AC
Frequency:	±5 percent
Current:	±5 percent

3.6.11 Short circuit. When tested as specified in 4.8.12, switch contacts under test shall open after each closure, and there shall be no mechanical failure or damage.

3.6.12 Vibration When switches are tested as specified in 4 8.13, there shall be no separation of closed contacts or closure of open contacts in excess of 10 microseconds. There shall be no damage.

3.6.13 Shock. When switches are tested as specified in 4.8.14, there shall be no separation of closed contacts or closure of open contacts exceeding 10 microseconds There shall be no damage.

3.6.14 Salt spray (corrosion). When switches are tested as specified in 4.8.15, there shall be no warping cracking, excessive corrosion, or other damage, and the specified cycling shall be completed without failure. The mounting hardware shall be readily removable at the conclusion of the test.

3.6.15 Thermal shock. When switches are tested as specified in 4.8.16, there shall be no mechanical or electrical damage, or loosening of rivets or other fastening devices

3.6.16 Moisture resistance. When switches are tested as specified in 4.8 17, there shall be no electrical failures, or breaking, spalling, cracking, or loosening of terminals.

3.6.17 Sand and dust. When switches are tested as specified in 4 8 18, switches shall, at the conclusion of the test, be electrically and mechanically operable as evidenced by ability to control a pilot-lamp circuit.

Source: https://assist.dla.mil -- Downloaded: 2016-11-13T02:14Z
Check the source to verify that this is the current version before use.

3.6.18 Switch sealing. When switches are tested as specified in 4.8.19, there shall be no leakage into the switch when it has been opened.

(a) When switches are tested as specified in 4.8.19.1(a), there shall be no leakage as evidenced by a continuous stream of air bubbles emanating from the switch case. After the test, there shall be no evidence of leakage into the switch when it has been opened.
(b) When switches are tested as specified in 4.8.19.1(b), there shall be no leakage as evidenced by a continuous stream of air bubbles emanating from the switch case.

3.7 Marking.

3.7.1 Identification of product. As a minimum, switches shall be marked in accordance with MIL-STD-1285 as follows:

(a) MS Military Standard part number or M number (category I only).
(b) Manufacturer's part number (category II and III).
(c) Manufacturer's name, trade mark or source code.
(d) Date code.
(e) Switch positions (on-off, etc.).

3.7.2 Terminal identification. Terminals shall be marked in accordance with figure 1. Terminal positions not used need not be identified. Terminal marking by ink stamping on the side of the switch case is permissible.

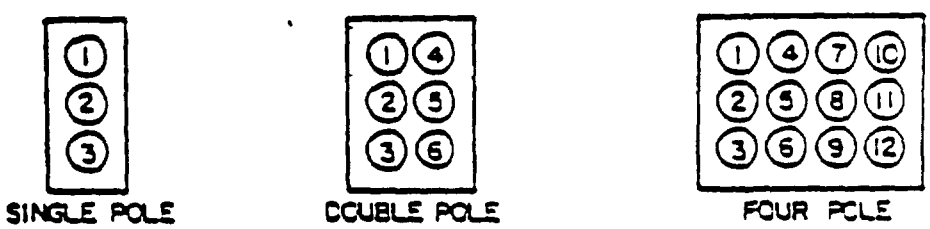

NOTES:
1. All views are rear of switch with keyway down.
2. Terminals 2, 2 and 5, and 5 and 8 are considered inboard terminals for single, two, and four poles, respectively. All others are outboard terminals

FIGURE 1. Terminal identification.

3.8 Workmanship. Switches shall be processed in such a manner to be free from cracked or displaced parts, sharp edges, burrs and other defects which will affect life, serviceability, or appearance.

Source: https://assist.dla.mil -- Downloaded: 2016-11-13T02:14Z
Check the source to verify that this is the current version before use.

4. QUALITY ASSURANCE PROVISIONS

4.1 Responsibility for inspection. Unless otherwise specified, the supplier is responsible for the performance of all inspection requirements as specified herein. Except as otherwise specified, the supplier may use his own or any other facilities suitable for the performance of the inspection requirements specified herein, unless disapproved by the Government. The Government reserves the right to perform any of the inspections set forth in the specification where such inspections are deemed necessary to assure supplies and services conform to prescribed requirements.

4.1.1 Test equipment and inspection facilities. Test and measuring equipment and inspection facilities of sufficient accuracy, quality, and quantity to permit performance of the required inspection shall be established and maintained by the supplier. The establishment and maintenance of a calibration system to control the accuracy of the measuring and test equipment shall be in accordance with MIL-C-45662.

4.2 Classification of inspection. The examination and testing of switches shall be classified as follows:

(a) Materials inspection (see 4.3).
(b) Qualification inspection (see 4.5).
(c) Inspection requirements for category II and category III switches (see 4.6).
(d) Quality conformance inspection (see 4.7).
  (1) Inspection of product for delivery (see 4.7.1).
  (2) Inspection of preparation for delivery (see 4 7 4)
(e) Periodic inspection (see 4.7.2).

4.3 Materials inspection. Materials inspection shall consist of verification that the materials listed in table I used in fabricating the switches, are in accordance with the applicable referenced specifications or requirements prior to such fabrication.

TABLE I. Materials inspection.

Material	Requirement paragraph	Applicable specification
Plastic	3.4.2	MIL-M-14 MIL-P-997 MIL-P-15037 MIL-P-18177 FED-STD-406
Rubber	3.4.3	ZZ-R-765
Solder flux	3.5.8	MIL-F-14256

4.4 Inspection conditions. Unless otherwise specified herein, all inspections shall be performed in accordance with the test conditions specified in the GENERAL REQUIREMENTS of MIL-STD-202.

4.5 Qualification inspection (category I switches, see 3 1 and 3.3). Qualification inspection shall be performed at a laboratory acceptable to the Government (see 6.3), on sample units produced with equipment and procedures normally used in production.

4.5.1 Sample For qualification inspection, the sample size shall be as specified in table II and the appendix to this specification

Source: https://assist.dla.mil -- Downloaded: 2016-11-13T02:14Z
Check the source to verify that this is the current version before use.

TABLE II. Qualification test sequence.

Examination or test	Requirement paragraph	Test paragraph	Specimen 1	2	3	4	5	6	7	8	9	10	2 switches for each voltage, current and frequency				
Examination of product - - -	3.1	4.8.1	1	1	1	1	1	1	1	1	1	1	1	1	1	1	1
Solderability -	3.6.1	4.8.2					2										
Resistance to soldering heat - - -	3.6.2	4.8.3						2									
Switching characteristics- -	3.6.3	4.8.4	2	2	2	2	3	3	2	2			2	2	2	2	2
Strength of terminals 1/- -	3.6.4	4.8.5											3				
Strength of toggle lever, pivot, and lever stop 1/- - - -	3.6.5	4.8.6											4				
Strength of mounting bushing 1/ - -	3.6.6	4.8.7											5				
Contact voltage drop - - - - -	3.6.7	4.8.8							3	3			6	3	3		
Dielectric withstanding voltage - - - -	3.6.8	4.8.9											7	4	4		
Mechanical endurance - - -	3.6.9	4.8.10							4	4			8				
Electrical overload and endurance - - - -	3.6.10	4.8.11											9				
Overload circuit - - - -	3.6.10	4.8.11.1											10	5	5		
Resistive load - - - - -	3.6.10	4.8.11.2											11				
Inductive load -	3.6.10	4.8.11.3												6			
Lamp load - - -	3.6.10	4.8.11.4													6		
Intermediate current - - - -	3.6.10	4.8.11.5														3	
Life, low level-	3.6.10	4.8.11.6															3
Temperature rise	3.6.10	4.8.11.7											12				
Contact voltage drop - - - - -	3.6.7	4.8.8							5	5							
Short circuit -	3.6.11	4.8.12			3	3											
Vibration - - -	3.6.12	4.8.13	3	3													
Shock - - - - -	3.6.13	4.8.14	4	4													
Salt spray (corrosion)- -	3.6.14	4.8.15			4	4											
Thermal shock -	3.6.15	4.8.16					4	4									
Moisture Resistance- -	3.6.16	4.8.17	5	5			5	5									
Dielectric withstanding voltage - - - - - -	3.6.8	4.8.9	6	6			6	6					13	7	7		
Sand and dust -	3.6.17	4.8.18									2	2					
Examination of product- - -	3.1	4.8.1	7	7	5	5	7	7	6	6	3	3	14	8	8	4	4
Switching characteristics	3.6.3	4.8.4	8	8	6	6	8	8	[illegible]	[illegible]	4	4	15	9	9	5	5
Switch sealing 2/ - -	3.6.18	4.8.19	9	9	[illegible]	[illegible]	9	9	8	8	5	5	16	[illegible]	[illegible]		

1/ Test shall be performed on two specimens only.
2/ Only the odd-numbered specimens shall be opened by the manufacturer.

Source: https://assist.dla.mil -- Downloaded: 2016-11-13T02:14Z
Check the source to verify that this is the current version before use.

4.5.2 Failures. Failure of any switch to comply with the applicable requirements shall be cause for refusal to grant qualification.

4.5.3 Test data. All test data shall be submitted in triplicate.

4.5.4 Certification of material. When submitting samples for qualification the manufacturer shall submit certification that the materials used in his components are in accordance with the applicable specification requirements, or shall state whether other materials are used. With the qualification test report, the manufacturer shall submit a cross-reference list of the switch parts and the materials used to fabricate those parts.

4.6 Inspection requirements for category II and category III switches. Inspection requirements shall be performed by the supplier, after award of contract and prior to production, in accordance with the ordering data (see 6.2.2 and 6.2.3).

4.6.1 Category II switches. Additional tests may be required to verify the deviations.

4.6.2 Category III switches. Unless specified otherwise in the ordering data, the inspection requirements shall be in accordance with 4.5.

4.7 Quality-conformance inspection

4.7.1 Inspection of product for delivery Inspection of product for delivery shall consist of group A inspection.

4.7.1.1 Inspection lot. All switches that appear on the same MS military standard or military specification sheet and that are offered for delivery at one time shall be considered a lot for purposes of sampling and inspection. Momentary action switches shall form a separate lot.

4.7.1.2 Group A inspection. Group A inspection shall consist of the examination and tests specified in table III in the order shown. Statistical sampling and inspection shall be in accordance with MIL-STD-105, general level III. Examination of product shall be limited to marking and workmanship. At the option of the supplier, in-process inspection may be used to meet the AQL requirements All of the supplier's in-process control data on these tests shall be made available to the Government upon request

TABLE III. Group A inspection

Examination or test	Requirement paragraph	Test paragraph	Inspection AQL	
			Major	Minor
Switch sealing - - - - - - - -	3.6.18	4.8.19.1(b)	1.0	---
Examination of product - - - -	3.1	4.8.1	1.0	4.0
Switching characteristics - - -	3.6.3	4.8.4		
Dielectric withstanding voltage - - - - - - - - - - - -	3.6.8	4.8.9	1.0	---
Contact voltage drop - - - - -	3.6.7	4.8.8		

Source: https://assist.dla.mil -- Downloaded: 2016-11-13T02:14Z
Check the source to verify that this is the current version before use.

4.7.1.3 Rejected lots. If an inspection lot is rejected, the supplier may withdraw the lot, rework it to correct the defects, or screen out the defective units, as applicable, and reinspect. Such lots shall be kept separate from new lots and shall be clearly identified as reinspected lots. Rejected lots shall be reinspected using tightened inspection.

4.7.2 Periodic inspection.

4.7.2.1 Group C inspection. Group C inspection shall be completed in accordance with table II within 1 year after initial qualification and within each three-year period thereafter. A manufacturer's normal quality control tests, production tests, environmental tests, and so forth, may be used to fulfill all or part of group C inspection; however all of group C inspection shall be completed as specified. Data used may be accumulated within the previous 24 months.

4.7.2.1.1 Sampling plan. The sampling plan and test procedure shall be as specified in the appendix to this specification.

4.7.2.1.2 Disposition of sample units. Sample units subjected to group C inspection shall be forwarded to the preparing activity.

4.7.2.1.3 Noncompliance. If a sample fails to pass group C inspection, the supplier shall take corrective action on the materials or processes, or both, as warranted, and on all units of product which can be corrected and which were manufactured under essentially the same conditions, with essentially the same materials, processes, etc. and which are considered subject to the same failure. Acceptance of the product shall be discontinued until corrective action, acceptable to the preparing activity, has been taken. After the corrective action has been taken, group C inspection shall be repeated on additional sample units (all inspections, or the inspection which the original sample failed, at the option of the preparing activity). Group A inspection may be reinstituted; however, final acceptance shall be withheld until the group C reinspection has shown that the corrective action was successful.

4.7.3 Retention of qualification. To retain qualification, the supplier shall forward to the preparing activity via Government quality assurance representative at yearly intervals, summaries of group A inspections for that period, along with group C test reports, when applicable. The summary of group A inspections shall indicate as a minimum the number of inspection lots which have passed and the number which failed, including the number and type of any part failures, the reason for failure, the corrective action taken and how the lot was reexamined. The group C test report shall cover the actual tests performed. If the results for group C tests indicate nonconformance with the specification requirements, action shall be taken to remove the failing product from the qualified products list. Failure to submit the summary shall result in loss of qualification for that product. In the event that no production occurred during the reporting period, a report shall be submitted certifying that the company still has the capabilities and facilities necessary to produce the item.

4.7.4 Inspection of preparation for delivery. Sample packages and packs and the inspection of the preservation-packaging, packing and marking for shipment and storage shall be in accordance with the requirements of Section 5.

4.8 Methods of examination and test.

4.8.1 Examination of product. Switches shall be examined to verify that the design, construction, marking, and workmanship are in accordance with the applicable requirements. Only two of the sample units shall be inspected for compliance with physical dimensions. This inspection shall be performed before any other test is performed on the sample units (see 3.1, 3.4, and 3.5).

Source: https://assist.dla.mil -- Downloaded: 2016-11-13T02:14Z
Check the source to verify that this is the current version before use.

4.8.2 Solderability (applicable to solderable terminals, see 3.6.1) Switches shall be tested in accordance with method 208 of MIL-STD-202. The following details and exceptions shall apply:

(a) Number of terminals to be tested - A minimum of one terminal of a closed contact per switch.
(b) Depth of immersion in molten solder - Terminals shall be immersed to the maximum extent possible.
(c) Examination of terminals - Method for evaluation of lugs and tabs shall apply.
(d) Dipping machine - Need not be used.

4.8.3 Resistance to soldering heat (applicable to solderable terminals (see 3.6.2) Switches shall be tested in accordance with method 210 of MIL-STD-202. The following details shall apply:

(a) Number of terminals to be tested - A minimum of one terminal of a closed contact per switch.
(b) Depth of immersion in molten solder - Terminals shall be immersed to the maximum extent possible.
(c) Test condition letter - B.
(d) Cooling time prior to final examinations and measurements - Not applicable.
(e) Examinations and measurements — Before - None.
After - Switches shall be operable and there shall be no evidence of internal deformation or other damage when opened at the conclusion of the test sequence.

4.8.4 Switching characteristics (see 3.6.3). Switching action (e.g., on-off, on-off-on, etc.) and circuitry shall be inspected for compliance with the applicable requirements (see 3.1). Circuit continuity shall be inspected using a 6-volt source with a maximum load of 100 milliamperes.

4.8.5 Strength of terminals (see 3.6.4) Switches shall be mounted by their normal mounting means. Two terminals on each switch shall be tested (see figure 1) However, a terminal shall be tested only once in one direction.

4.8.5.1 Solderable terminals Solderable terminals shall be tested in accordance with method 211 of MIL-STD-202. The following details and exceptions shall apply:

(a) Test condition letter - A.
(b) Applied force - 5 pounds.
(c) Direction of applied force
  (1) With the terminals vertical and pointing downward, the specified pull shall be applied directly downward.
  (2) With the terminals horizontal, the specified pull shall be applied directly downward.

4.8.5.2 Screw-lug terminals. Screw-lug terminals shall be tested in accordance with method 211 of MIL-STD-202. The following details and exceptions shall apply

(a) Test condition letter - A.
(b) Applied force - 25 pounds, except that where 4-40 terminals are used, a 5-pound pull shall be used.

Source: https://assist.dla.mil -- Downloaded: 2016-11-13T02:14Z
Check the source to verify that this is the current version before use.

(c) Direction of applied force:
(1) Parallel to the axis of the terminal screw.
(2) Perpendicular to the axis of the terminal screw.

4.8.5.3 Integrated wire terminals. Integrated wire terminals shall be subjected to a 15-pound pull for 5 to 10 seconds in the following directions

(a) With the long dimension of the terminal contact vertical, and the contact opening facing downward, specified pull shall be applied directly downward.
(b) With the long dimension of the terminal contact horizontal, the specified pull shall be applied directly downward.

4.8.5.4 Screw thread terminals. Screw-thread terminals shall be tested in accordance with method 211 of MIL-STD-202, test condition letter E. The torque shall be applied in the direction which will tighten the screw.

4.8.6 Strength of toggle lever, pivot, and lever stop (see 3.6.5) The switch shall operate mechanically and electrically at a maximum load of 6 volts dc, 100 milliamperes after the following tests:

(a) A 25-pound load shall be applied to the tip of the actuating lever for one minute under each of the following conditions

(1) Perpendicular to the lever axis and parallel to the line of lever travel at each end position of the lever. For lever-lock types, the test shall be conducted at each fixed position of the lever.
(2) Perpendicular to the lever axis and perpendicular to the line of travel at each lever position.
(3) Coaxial with the lever axis away from the lever pivot, throughout the entire range of lever travel.
(b) A 25-pound load shall be applied to the tip of the actuating lever, coaxial with the lever axis and toward the lever pivot, throughout the entire range of lever travel. For lever-lock types, this test is only applicable to those changes in lever position which may be accomplished without lifting the lever from its detent position.

4.8.7 Strength of mounting bushing (see 3.6.6) Bushing-mounted switches shall be mounted on a metal panel using normal mounting means and hardware. A torque of 25-pound-inches shall be applied to the mounting nut on switches with 15/32-inch diameter bushings or larger and a torque of 15-pound-inches shall be applied to the mounting nut on smaller size bushings. With the mounting nut tightened using a maximum torque of 5 ounce-inches, a torque of 5 pound-inches shall then be applied to the mounted switch body.

4.8.8 Contact voltage drop (see 3.6.7) Switches shall be tested in accordance with method 307 of MIL-STD-202, the following details and exceptions shall apply

(a) Measurements shall be made between the terminals of the contacts of the same pole forming a switching circuit. Measurements shall be made for each pole of multipole switches.
(b) Test current - 100 milliamperes.
(c) Open-circuit voltage - 2 to 6 volts dc.
(d) Number of activations prior to measurement - 3
(e) Number of test activations - 3.
(f) Number of measurements per activation - 1.

Source: https://assist.dla.mil -- Downloaded: 2016-11-13T02:14Z
Check the source to verify that this is the current version before use.

4.8.9 Dielectric withstanding voltage (see 3.6 8) Switches shall be tested in accordance with method 301 of MIL-STD-202. The following details and exceptions shall apply

(a) Special conditions For qualification and group C inspections, switches shall be tested in accordance with 4.8.9.1, and 4 8.9 2. For group A inspection, switches shall be tested in accordance with 4.8.9.1.
(b) Test voltage: The magnitude of the applied test voltage shall be as specified in 4.8.9.1 and 4.8.9.2.
(c) Duration of application of test voltage:
  (1) Qualification and group C inspections: 1-minute, minimum.
  (2) Group A inspection: 2 to 5 seconds.
(d) Points of application: The following points of application shall apply for each toggle lever position:
  (1) Between current-carrying parts and all noncommon exposed or grounded metal parts.
  (2) Between current-carrying parts of adjacent poles of multipole switches (not applicable after electrical endurance test).
  (3) Between mutually insulated current-carrying parts of the same pole (not applicable after electrical endurance tests)
(e) Monitoring: The circuit shall be monitored while the test voltage is at its specified magnitude, to determine if the leakage current exceeds 500 microamperes.
(f) Examination after test - Switches shall be examined for evidence of arcing, flashover, breakdown of insulation, or damage.

4.8.9.1 At atmospheric pressure The applied test voltage shall be

(a) Qualification and group C inspections - 1,000 Vrms minimum except
  (1) Switches rated above 250 volts shall be subjected to a minimum voltage of 1,000 Vrms plus 200 percent of the maximum rated voltage.
  (2) 750 Vrms, minimum, after electrical endurance tests
(b) Group A inspection - Test shall be conducted at room ambient conditions, and the potential shall be 1,200 Vrms minimum except switches rated above 250 volts shall be subjected to a minimum voltage of 1,200 Vrms plus 240 percent of the maximum rated voltage

4.8 9.2 At reduced barometric pressure. The following details shall apply

(a) Method 105 of MIL-STD-202 at 65,000 ft.
(b) The applied test voltage shall be 500 Vrms minimum except switches rated above 250 volts shall be subjected to a minimum voltage of 500 Vrms plus 200 percent of the maximum rated voltage

4 8 10 Mechanical endurance (see 3.6 9) The switches shall be subjected to 40,000 cycles of operation. The following details shall apply

(a) Switches shall be maintained at a temperature of $-65^{\circ}\ ^{+0^{\circ}}_{-4^{\circ}}$C for a period of at least two hours with the contacts open. At the conclusion of this period all "on" positions shall be tested using a pilot circuit with parameters of 28 Vdc maximum and 100 milliamperes maximum. Failure to turn "on" on the first operation shall constitute failure.

Source: https://assist.dla.mil -- Downloaded: 2016-11-13T02:14Z
Check the source to verify that this is the current version before use.

(b) One half the cycles shall be $-65^{\circ}{}^{+0^{\circ}}_{-4^{\circ}}$C while the other half of the cycles shall be at $+71^{\circ}{}^{+4^{\circ}}_{-0^{\circ}}$ C.

(c) A cycle shall be the movement of the toggle lever from one extreme position to the other extreme position and return to the original position.

(d) Cycling rate shall be 10 to 18 cycles per minute (cpm). At the manufacturer's option, a faster rate of cycling up to 60 cpm may be used.

(e) Lever-lock switch handles shall also be tested for 20,000 actuations, at room ambient conditions, by pulling the lever to its fully extended position and then permitting it to return to its fully retracted position without operation of the switches, at a maximum of 60 cpm.

(f) With the toggle lever in the unlocked position, lever-lock switches shall be tested with the toggle lever moving through all positions.

(g) Momentary switches shall return from their momentary position(s) solely by the internal mechanism of the switch.

4.8.11 Electrical endurance, electrical overload, intermediate current low level life, and temperature rise (see 3.6.10). The following conditions and exceptions shall apply:

(a) Test switches shall be mounted by their normal mounting means against a metal plate. Insulators shall not be interposed between the switch case and the metal plate or between the metal actuator of the actuating machine and the switch toggle.

(b) The metal mounting plate, one side of the power supply, and the metal actuator of the actuating machine shall all be connected to a common ground through a 3 ampere fuse per MIL-F-15160/2, characteristic A (F02A, 250V, 3A) (see figure 2). For direct current, the negative side of the power supply shall be grounded. The test switch shall be connected to the power source and test load using a 4 to 6 feet length of wire as specified in table IV.

(c) The test voltage magnitude and electrical frequency shall be maintained within the tolerances specified when the test voltage is measured at the switch terminals. Each operation of the switch shall be monitored to determine whether any contact has failed to open or close its individual circuit in proper sequence. Each failure shall be recorded and reported. Monitoring circuits shall not shunt switch contacts or inductive components in the test circuit.

(d) One throw of each pole of the switch shall be connected to an independent test circuit meeting the specified conditions. Multipole switches are to be tested with a load per pole and with opposite line polarity on adjacent poles in accordance with figure 2. For double-throw switches, one half the switches shall be tested with the load circuit connected to one throw and the remaining half of the switches shall be tested with the load circuit connected to the other throw.

Source: https://assist.dla.mil -- Downloaded: 2016-11-13T02:14Z
Check the source to verify that this is the current version before use.

(e) Switches shall be actuated at a frequency of 10 to 18 cpm at a velocity of 3 to 5 inches per second by a power driven actuator The switch shall be continuously actuated for the specified number of cycles and shall be actuated only through the toggle lever positions necessary to make and break the test load Switches with lever-lock toggle levers shall be tested with the toggle lever in the unlock position.

(f) During the overload test, the closed time of the switch shall be 0.5 second, minimum, during each cycle of operation. Unless otherwise specified (see 3.1), the endurance test duty cycle shall be a minimum of 25 percent on.

(g) Unless otherwise specified (see 3.1), two switches shall be subjected to the overload, resistive, inductive, and lamploaf endurance tests at each voltage, frequency, and current specified (see table II).

(h) Overload and endurance tests shall be performed on the same pair of contacts using the same voltage and electrical frequency for both tests.

4.8.11.1 Overload circuit. The switch shall make and break 150 percent of the rated resistive load at the applicable voltage and electrical frequency for 50 cycles of operation at room conditions.

4.8.11.2 Resistive load (dc and ac). One half of the switches shall make and break the rated resistive load for 20,000 operating cycles while at room ambient pressure and a temperature of 71° $^{+4°}_{-0°}$C. The other half of the switches shall make and break the rated resistive load for 20,000 operating cycles while at room temperature and a pressure equivalent to 65,000 feet altitude.

4.8.11.3 Inductive load (dc and ac). One half of the switches shall make and break the rated inductive load for 20,000 operating cycles while at a pressure equivalent to 65,000 feet altitude and at room ambient temperature while the other half shall make and break the rated inductive load for 20,000 operating cycles at room ambient temperature and pressure. The dc inductive loads shall use inductors in accordance with MIL-I-81023. The ac inductive loads shall have a power factor of 70 ± 5 percent.

4.8.11.4 Lamp-load (dc and ac). Switches shall be subjected to 20,000 operating cycles when wired into a circuit having rated steady state lamp-load current at the applicable rated voltage. For ac lamp-loads, only tungsten filament lamps having a wattage not exceeding 200 watts at the specified voltage shall be used to make up the load. For dc lamp-loads only tungsten filament lamps having a wattage rating up to 50 watts at the specified voltage shall be used to make up the load. A minimum cooling period of 15 seconds shall be allowed between successive operations of the lamps. At the option of the manufacturer, a synthetic lamp-load may be used for this test. The synthetic lamp-load shall consist of making ten times the rated lamp-load and breaking the rated lamp-load. The duration of the ten times inrush shall be .015 second, minimum.

4.8.11.5 Intermediate current. Switches shall be subjected to 20,000 operating cycles of making and breaking a 35 to 40 milliampere resistive load at the lowest rated dc voltage in an ambient temperature of 71° $^{+4°}_{-0°}$C. Multipole switches shall be subjected to this test with alternate poles making and breaking the rated resistive load at the lowest dc voltage

Source: https://assist.dla.mil -- Downloaded: 2016-11-13T02:14Z
Check the source to verify that this is the current version before use.

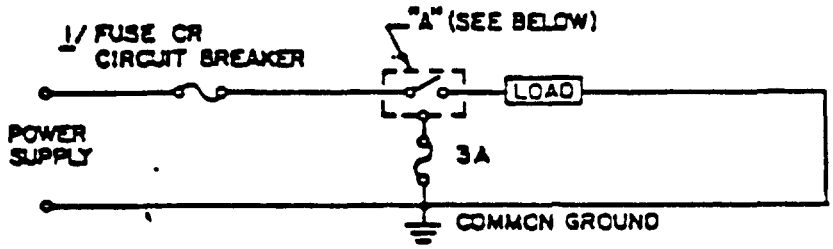

a) Test set-up for single pole switches.

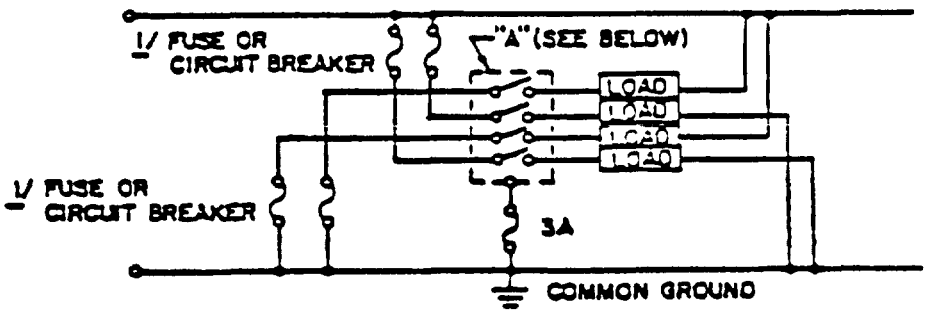

b) Test set-up for multipole switches (opposite polarity between adjacent poles)

"A" Metal mounting plate and metal actuator of actuating machine.
1/ See table IV for proper fuse or circuit breaker.

FIGURE 2. Test set-up for electrical endurance test

Source: https://assist.dla.mil -- Downloaded: 2016-11-13T02:14Z
Check the source to verify that this is the current version before use.

4.8.11.6 Life, low level When specified (see 3.1), switches shall be tested in accordance with method 311 of MIL-STD-202. The following details and exceptions shall apply:

(a) Number of "misses" allowed - None.
(b) Maximum contact resistance - 3 ohms.
(c) Number of cycles and cycling rate - 40,000 cycles at the rate of 10 to 18 cpm. At the manufacturer's option, a faster rate of cycling up to 60 cpm may be used.
(d) The conditions of figure 2 do not apply.

4.8.11.7 Temperature rise Each pole(s) of the switch shall be connected in a circuit carrying the resistive endurance test current at any convenient ac or dc voltage. At the end of a 1-hour period, the terminal temperature rise at a point adjacent to the insulating medium shall be determined by means of appropriate thermocouples consisting of No. 28-32 AWG iron-constantan wire. This test shall be performed on the same switch contacts previously subjected to the overload and resistive electrical endurance test. During this test, switches shall be mounted 6 inches apart in still air on a 1/16 inch-thick steel panel at least 6 inches long.

4.8.12 Short circuit (see 3.6.11). Switches shall be tested in accordance with 4.8.12.1, or 4.8.12.2 when specified (see 3.1). The following details shall apply to both methods:

(a) The switches shall be inserted in a circuit calibrated to supply current equal to 60 times the rated resistive load at the lowest rated dc voltage specified (see 3.1).
(b) The switches shall be connected in series to a thermal type circuit breaker or a fuse in accordance with figure 3 and table IV.
(c) The wire shall be as specified in MIL-W-5086 and table IV, as determined by the rated resistive load of the switch (see 3.1).

TABLE IV. Wire size and circuit breaker or fuse designations.

Amperes 1/	MIL-W-5086 wire size	Circuit breaker or fuse
3.0 or less	20	The size of the circuit breaker or fuse shall be equivalent to the test current.
5.0	20	
7.5	18	
10.0	18	
15.0	18	
18.0	16	
20.0	16	
25.0	14	
30.0	14	
40 0	12	
60.0	10	
80.0	8	
175.0	2	

1/ Where the wire size, circuit breaker, or fuse size does not coincide with the required current, the next larger wire size, circuit breaker, or fuse shall be used

Source: https://assist.dla.mil -- Downloaded: 2016-11-13T02:14Z
Check the source to verify that this is the current version before use.

(d) Terminals shall be in accordance with MIL-T-7928.
(e) Calibration shall be made with a substitute circuit breaker (or fuse), without the switch being tested, and with the switch leads in the circuit.
(f) The calibrated circuit shall be closed by the appropriate switch (see 4.8.12.1, or 4.8.12.2), and after the circuit breaker or fuse interrupts the circuit the appropriate switch shall be manually opened by means of the toggle lever. This procedure shall be performed 10 times. After each closure, the toggle lever of the switch under test shall be returned manually to the "OFF" or an alternate position, and the switch contacts shall be checked for proper opening by any suitable continuity test method. The circuit breaker shall be reset or the fuse replaced after each closure. Two minutes minimum shall elapse between closures. For double throw switches, one-half shall be tested in one position, and the other half shall be tested in the other position. For multipole switches any(one) pole shall be tested.

4.8.12.1 Method I. The switch used to calibrate the circuit shall close the circuit.

4.8.12.2 Method II. The switch being tested shall close the circuit.

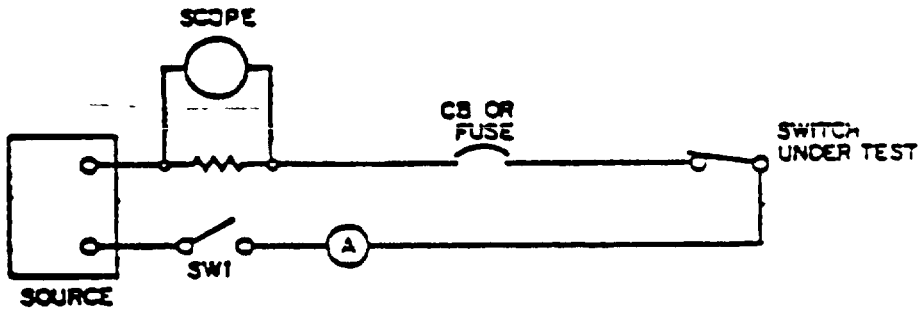

FIGURE 3. Circuit diagram for short circuit test.

4.8.13 Vibration (see 3.6.12). Switches shall be tested in accordance with method 204 of MIL-STD-202. The following details and exceptions shall apply:

(a) Contact chatter shall be monitored in accordance with method 310 of MIL-STD-202.
(b) Test condition letter - A.
(c) Tests and measurements prior to vibration - Not applicable
(d) Mounting - Switches shall be rigidly mounted by their normal mounting means on a rigid metal panel. The mounting fixture shall be free from resonances over the test frequency range. Half of the switches shall be tested in one lever position and the other half of the switches shall be tested in the alternate lever position.
(e) Electrical load conditions - The electrical load shall consist of the monitor circuit only

Source: https://assist.dla.mil -- Downloaded: 2016-11-13T02:14Z
Check the source to verify that this is the current version before use.

(f) Measurements during vibration - Switch contact stability shall be continuously monitored during vibration. If more than one contact pair is being monitored simultaneously by one chatter indicator, open contact pairs shall be connected in parallel and closed contact pairs shall be connected in series during this test. In the event of indication of a contact opening greater than specified, the test shall be modified so that switches may be individually tested to determine if a switch is defective.

(g) Measurements after vibration - Switching characteristics (see 4.8.4)

(h) Examination after test - Switches shall be examined for change in actuated position, and evidence of broken, deformed, displaced, or loose parts.

4.8.14 Shock (see 3 6 13) Switches shall be tested in accordance with method 213, test condition B of MIL-STD-202. The following details and exceptions shall apply

(a) Contact chatter shall be monitored in accordance with method 310, test condition A of MIL-STD-202.

(b) Mounting - Switches shall be mounted by their normal mounting means Half of the switches shall be tested in one lever position and the other half of the switches shall be tested in the alternate lever position.

(c) Electrical load conditions - The electrical load shall consist of the monitor circuit only.

(d) Measurements during shock - Switch stability shall be continuously monitored during shock. If more than one contact pair is being monitored simultaneously by one chatter indicator, open contact pairs shall be connected in parallel and closed contact pairs shall be connected in series during this test. In event of indication of a contact opening greater than specified, the test shall be modified by applying successive identical blows in the same plane to monitor contacts, switch by switch, to determine if a switch is defective.

(e) Measurements after shock - Switches shall be inspected for switching characteristics (see 4.8.4).

(f) Examination after test - Switches shall be examined for evidence of broken, deformed, displaced, or loose parts.

4.8.15 Salt spray (corrosion)(see 3 6 14) Switches shall be tested in accordance with method 101 of MIL-STD-202. The following details and exceptions shall apply

(a) Test condition letter - B.

(b) Switches shall be dried for 6 hours in a force draft oven at 50° to 60°C. Following the drying period, the switches shall be subjected to 10 cycles of operation at the lowest rated dc voltage.

(c) Following the 10 cycles of operation, switches shall be examined for warping, cracking, or excessive corrosion. Excessive corrosion is defined as corrosion which interferes with electrical or mechanical performance, or in the case of plated metals, corrosion which has passed through the plating and attacked the base metal. After the test, mounting hardware shall be readily removable.

4 8.16 Thermal shock (see 3 6.15) Switches shall be tested in accordance with method 107 of MIL-STD-202 The following details shall apply:

(a) Test condition letter - B

(b) Measurements before and after cycling - Not applicable

Source: https://assist.dla.mil -- Downloaded: 2016-11-13T02:14Z
Check the source to verify that this is the current version before use.

(c) Examination after test - Switches shall be examined for mechanical and electrical damage and loosening of fastening devices.

4.8.17 Moisture resistance (see 3.6.16). Switches shall be tested in accordance with method 106 of MIL-STD-202. The following details and exceptions shall apply:

(a) Mounting - By normal mounting means on a corrosion resistant metal panel positioned 15° from the vertical. One half the switches shall be mounted with the toggle lever up and the other half with the toggle lever down. The mounting panel shall have appropriate mounting holes so that switches are at least 1 inch apart.

(b) Polarization - During steps 1 to 6 inclusive, a dc potential of 100 volts shall be applied between current-carrying parts and panel. Negative polarity shall be applied to the panel. Steps 7a and 7b are not applicable.

(c) Final measurements - Following a 24-hour drying period at 25° ± 5°C and 50 ± 5 percent relative humidity, switching characteristics shall be measured as specified in 4.8.4. Switches shall be examined for evidence of breaking, spalling, cracking, or loosening of terminals and shall be electrically operable.

(d) Water - Steam, deionized or distilled water shall be used.

4.8.18 Sand and dust (see 3.6.17). applicable to qualification only Switches shall be tested in accordance with method 110 of MIL-STD-202. The following details shall apply:

(a) The switches shall be oriented so that the toggle lever seal is exposed to the dust stream.

(b) During step 3, the switches shall be mechanically actuated for 2500 cycles at a rate of 14 ± 4 cycles per minute.

(c) Step 3 shall be performed immediately after reaching stabilization in step 2

4.8.19 Switch sealing (see 3.6.18).

4.8.19.1 Sealing.

(a) Applicable for qualification group C tests only. Switches shall be immersed in an enclosure containing a saturated solution of sodium chloride. The enclosure shall be subjected to a vacuum resulting in an absolute pressure of 2.0 ± 5 inches of mercury. During the first 5 minutes after the required vacuum has been reached, the immersed switches shall be observed for leakage as evidenced by a continous stream of bubbles emanating from the switch case. The vacuum shall be maintained for a period of 4 hours, and the pressure shall then be returned to normal. After immersion for a minimum of 16 hours at normal pressure, the switches shall be removed from the enclosure, and the odd-numbered specimens shall be opened and examined for leakage at the conclusion of the test sequence. "Switches with integrated wire termination shall be fully wired and shall have one inboard and one outboard terminal on two switches loaded with a 5 ± 1 pound load at 90° to the center line of the switches."

(b) Applicable for group A tests only. The switches shall be immersed in an enclosure containing water. The enclosure shall be subjected to a vacuum resulting in an absolute pressure equal to

Source: https://assist.dla.mil -- Downloaded: 2016-11-13T02:14Z
Check the source to verify that this is the current version before use.

2 ±5 inches of mercury for 5 minutes The immersed switches shall be observed for leakage as evidenced by a continuous stream of bubbles emanating from the water prior to release of the vacuum

4.8,19.2 Terminal sealing, fluid submersion (applicable to switches with integrated wire terminals)

(a) Applicable to qualification and group C only. Switch terminals shall be immersed for three cycles as follows
(1) Two switches (specimens 1 and 2 of table II) with integrated wire terminals shall be fully wired.
(2) Switches shall be completely submerged in each of the following fluids for 2 $^{+4}_{-0}$ minutes which shall consist of one cycle:
a. MIL-T-5624 - Turbine Fuel, Aviation, Grades JP-4 or JP-5
b. Skydrol 500 A - Federal Stock Number 9150-857-9069
c. Coolanel - Federal Stock Number 9150-551-4022
d. MIL-E-9500 - Ethylene Glycol, Technical Uninhibited
e. MIL-L-7808 - Lubricating Oil, Aircraft Turbine Engine, Synthetic Base.
f. After each immersion the excess liquid is to be blown off the switch external surfaces with an air jet
(3) At the end of the third cycle, the dielectric withstanding voltage shall be as specified herein. There shall not be any evidence of cracking and loosening of bonds and seams
(4) Switches shall be operable and the odd numbered seams shall be opened and examined for leakage upon conclusion of the test sequence.

5. PREPARATION FOR DELIVERY

5.1 Preparation for delivery. Preparation for delivery shall be in accordance with MIL-S-28786.

6. NOTES

6.1 Intended use Unless otherwise specified on the individual MS military standards or military specification sheets, switches furnished under this specification are not intended for use in circuits with ratings lower than the intermediate current

6.2 Ordering data Procurement documents should specify the following

6.2.1 Category I switches

(a) National Stock Number (NSN).
(b) Switch, Toggle.
(c) MS or M number along with document number and date (see 3.1)
(d) Basic document and date
(e) Amendments if applicable.
(f) Levels of preservation-packaging, and packing.
(g) Whether mounting and/or terminal hardware is not to be furnished.

6.2.2 Category II switches (Available manufacturing test data showing compliance may be substituted as meeting these requirements at option of procuring activity A copy of the drawing furnished under (f) including the description of the variations from the specification sheet, shall be sent to the preparing activity as

Source: https://assist.dla.mil -- Downloaded: 2016-11-13T02:14Z
Check the source to verify that this is the current version before use.

listed on the individual specification sheet. Preparation and submission of data shall be in accordance with step II, MIL-STD-749, Preparation and Submission of Data for Approval of Nonstandard Electrical Parts).

(a) National Stock Number (NSN).
(b) Switch, Toggle.
(c) MS or M number along with document number and date of similar category I switch.
(d) Basic document and date and amendments if applicable
(e) Statement that switch is category II.
(f) Manufacturers part number of modified switch.
(g) Details of the variations from the MS military standard or military specification sheet.
(h) Inspection requirements - (To verify variations from category I switches).
  (1) Tests to be performed (if any).
  (2) The laboratory at which inspection is to be performed
  (3) Samples and submission of data, if other than that specified
(i) Levels of preservation-packaging, packing, and marking (see Section 5).

6.2.3 Category III switches

(a) National Stock Number (NSN).
(b) Basic document and date, and amendment if applicable.
(c) Manufacturer's part number.
(d) Details of design, construction, physical dimensions, and weight (see 3.5).
(e) Other plastic material, if required (see 3.4.2).
(f) Other types of silicone rubber, if required (3.4 3)
(g) Switching characteristics (see 4.8.4).
(h) Inspection requirements.
  (1) The laboratory at which inspection is to be performed
  (2) Samples and submission of data, if other than that specified
(i) Mounting hardware (see 3.5.5.1).
(j) Screw-terminal hardware (see 3.5.5.2).
(k) Altitude rating.
(l) Electrical load conditions for electrical endurance and number of cycles (see 4.5.11).
(m) Contact voltage drop if other than specified (see 4.8 3)
(n) Short circuit (see 4.5.12).
(o) Operating temperature range.
(p) Levels of preservation-packaging, packing, and marking (see Section 5).

6.2.4 Indirect shipments. The preservation-and-packaging, packing, and marking specified in Section 5 apply only to direct purchase by or direct shipments to the Government and are not intended to apply to contracts or orders between the supplier and prime contractor unless so specified.

6.3 Qualification With respect to products requiring qualification, awards will be made only for such products as have, prior to the time set for opening of bids, been tested and approved for inclusion in Qualified Products List (QPL) 3950, whether or not such products have actually been so listed by that date The attention of the suppliers is called to this requirement, and manufacturers are urged to arrange to have the products that they propose to offer to the Federal Government tested for qualification in order that they may be eligible to be awarded contracts or orders for the products covered by this specification. Information pertaining to the qualification of products

Source: https://assist.dla.mil -- Downloaded: 2016-11-13T02:14Z
Check the source to verify that this is the current version before use.

may be obtained from Air Force Logistics Command, AFLC (MMCE), Wright-Patterson Air Force Base, Ohio 45433. Application for qualification tests shall be made in accordance with "Provisions Governing Qualification". (Copies of specifications and "Provisions Governing Qualification" may be obtained upon application to Commanding Officer, Naval Publications and Forms Center, 5801 Tabor Avenue, Philadelphia, Pennsylvania, 19120)

6.3.1 Test for switches not qualified. Qualification inspection for toggle switches covered by military specification sheets that are not listed on or approved for listing on QPL 3950 is waived. Until the toggle switches are qualified, first article and acceptance testing shall be in accordance with table II and inspection of product for delivery.

6.4 Luminescent tips. When luminescent tips are required, they should be in accordance with MS70089 (Marker, Self-luminous and Marker, Fluorescent, Tip, Toggle Switch). Luminescent material should conform to Type F of MIL-L-3891 (Luminescent Material and Equipment, Nonradioactive).

6.5 Panel seals. Panel seals should be in accordance with MS25196 (Seal, Bushing, External).

6.6 Switch guards. When switch guards are required, they should be in accordance with MIL-G-7703 (Guard, Switch).

6.7 Intermetallic contact. The finishing of metallic areas to be placed in intimate contact by assembly presents a special problem, since intermetallic contact of dissimilar metals results in electrolytic couples which promote corrosion through galvanic action. To provide the required corrosion protection, intermetallic couples are restricted to those permitted by table V. Table V shows metals and alloys (or platings) by groups which have common electromotive forces (EMF) within 0.05 volt when coupled with a saturated calomel electrode in sea-water at room ambient temperatures. All members of a group are considered as completely compatible, one with the other. Compatible couples between groups have been specified in table V based on a potential difference of 0.25 volt maximum. To simplify any arithmetic involved, table V shows, in addition to EMF against a calomel electrode, a derived "anodic index" with group 1 (gold, and so forth, as 0 and group 18 (magnesium, and so forth) as 175. Subtraction of a lower group anodic index from a higher index gives the EMF difference in hundredths of a volt.

6.7.1 Groups. Table V sets up 18 primary groups. It may be noted that neither the metallurgical similarity or dissimilarity of metals is the parameter for selection of compatible couples. All members within a group, regardless of metallurgical similarity, are considered inherently nonsusceptible to galvanic action when coupled with any member within the group, for example, such dissimilar metals as platinum and gold. Similarly, such basically dissimilar alloys as austenitic stainless steel, silver-solder, and low brass (all members of group 5) are inherently nonsusceptible when coupled together.

6.7.2 Compatibility graphs. Permissible couple series are shown in table V by the graphs at the right. Members of groups connected by lines will form permissible couples. An "C" indicates the most cathodic member of each series, and "A" an anodic member, and the arrow indicates the anodic direction.

6.7.3 Selection of compatible couples. Proper selection of metals in the design of equipment will result in fewer intermetallic contact problems. For example, for sheltered exposure, neither silver nor tin require protective finishes. However, since silver has an anodic index of 15 and tin 63, the EMF generated as a couple is 0.50 volt which is not allowable by table V. In this case, other metals or plating will be required. It should be noted that in intermetallic couples, the member with the

Source: https://assist.dla.mil -- Downloaded: 2016-11-13T02:14Z
Check the source to verify that this is the current version before use.

TABLE V. Compatible couples (sec 6.7) 1/

Group No.	Metallurgical category	EMF (volt)	Anodic index (0.01 v)	Compatible couples
1	Gold, solid and plated; gold-platinum alloys; wrought platinum (most cathodic)	+0.15	0	
2	Rhodium plated on silver-plated copper	+0.05	10	
3	Silver, solid or plated; high silver alloys	0	15	
4	Nickel, solid or plated; monel metal, high nickel-copper alloys	-0.15	30	
5	Copper, solid or plated; low brasses or bronzes; silver solder; German silver; high copper-nickel alloys; nickel-chromium alloys; austenitic corrosion-resistant steels	-0.20	35	
6	Commercial yellow brasses and bronzes	-0.25	40	
7	High brasses and bronzes; naval brass; Muntz metal	-0.30	45	
8	18 percent chromium type corrosion-resistant steels	-0.35	50	
9	Chromium, plated; tin, plated; 12 percent chromium type corrosion-resistant steels	-0.45	60	
10	Tin-plate; terneplate; tin-lead solder	-0.50	65	
11	Lead, solid or plated; high lead alloys	-0.55	70	
12	Aluminum, wrought alloys of the duralumin type	-0.60	75	
13	Iron, wrought, gray, or malleable; plain carbon and low alloy steels, armco iron	-0.70	85	
14	Aluminum, wrought alloys other than duralumin type; aluminum, case alloys of the silicon type	-0.75	90	
15	Aluminum, cast alloys other than silicon type; cadmium, plated and chromated	-0.80	95	
16	Hot-dip-zinc plate; galvanized steel	-1.05	120	
17	Zinc, wrought; zinc-base die-casting alloys; zinc, plated	-1.10	125	
18	Magnesium and magnesium-base alloys, cast or wrought (most anodic)	-1.60	175	

1/ Compatible couples - potential difference of 0.25 volt maximum between groups.

Source: https://assist.dla.mil -- Downloaded: 2016-11-13T02:14Z
Check the source to verify that this is the current version before use.

higher anodic index is anodic to the member with the lower anodic index and will be susceptible to corrosion in the presence of an electrolytic medium If the surface area of the cathodic part is significantly greater than that of the anodic part, the corrosive attack on the contact area of the anodic part may be greatly intensified Material selection for intermetallic contact parts, therefore, should establish the smaller part as the cathodic member of the couple, whenever practicable.

6.7.4 Plating. When base metals intended for intermetallic contact form couples not allowed by table V, they are to be plated with those metals which will reduce the potential difference to that allowed by table V.

6.8 Military standard part numbering. In order to provide uniform part numbering and format, MS27740 (Switches, MIL-S-3950 and MIL-S-83731, Military Standard Part Numbering) should be followed.

6.9 Changes from previous issue. Asterisks are not used in this revision to identify changes with respect to the previous issue, due to the extensiveness of the changes.

Custodians:
Army - EL
Navy - AS
Air Force - 85

Review activities:
Army - AV, MI, MU, EA
Navy - EC
Air Force - 11, 80
DSA - ES

User activities:
Army - AT, ME

Preparing activity
Air Force - 85

(Project 5930-0980)

Source: https://assist.dla.mil -- Downloaded: 2016-11-13T02:14Z
Check the source to verify that this is the current version before use.

APPENDIX

Procedure for Qualification Inspection. Mounting and Terminal Hardware

10. Scope.

10.1 This appendix details the procedure for submission of samples for qualification and Group C inspection of toggle switches covered by this specification. This appendix also lists mounting and terminal hardware used with toggle switches covered by this specification. Mounting and terminal hardware should be of the following design and construction as specified (see 3.1).

20. Samples.

20.1 Qualification. For qualification inspection, the sample size shall be as specified in table II and the tests shall be performed in the sequence shown.

20.1.2 Single submission. A sample consisting of the required number of specimens of each switch shall be submitted. Qualification shall be restricted to the type submitted.

20.1.3 Group submission. A sample consisting of the required number of specimens of each basic switch listed in table VI shall be submitted and shall be subjected to the qualification test sequence of table II in the order shown. In addition, two specimens of each of the other switches listed in table VI shall be submitted and shall be subjected to the examination of product and switching characteristics test of table II.

20.2 Group C inspection. Sample units shall be selected at random from lots that have passed group A inspection.

20.2.1 Single submission. The sample size shall be as specified in table II and the tests shall be performed in the order shown.

20.2.2 Group submission. A sample consisting of the required number of specimens of each basic switch listed in table VI shall be subjected to the test sequence of table II in the order shown. In addition, two specimens of each of the other switches listed in table VI shall be submitted and shall be subjected to the examination of product and switching characteristic test of table II. If the basic switches of a group are not in production at the time of selection of samples, other switches of the same group may be submitted, but maintained action switches shall not be substituted for momentary action switches.

Source: https://assist.dla.mil -- Downloaded: 2016-11-13T02:14Z
Check the source to verify that this is the current version before use.

TABLE VI Group submission for qualification inspection for complete listing

Basic switch (all applicable tests)	Additional switches (examination of product and switching characteristics)	Basic switch (all applicable tests)	Additional switches (examination of product and switching characteristics)
MS24523-21	MS24523-24	MS27738-21	---
MS24523-27	MS24523-32	MS27738-27	---
MS24524-21	MS24524-24	MS27739-21	---
MS24524-27	MS24524-32	MS27739-27	---
MS24525-21	MS24525-24	MS27781-21	---
MS24525-27	MS24525-32	MS27781-27	---
MS24658-21	MS24658-24	MS27782-21	---
MS24658-27	MS24658-32	MS27782-27	---
MS24659-21	MS24659-24	MS27783-21	---
MS24659-27	MS24659-32	MS27783-27	---
MS24660-21	MS24660-24	MS27784-21	---
MS24660-27	MS24660-32	MS27784-27	---
MS27406-2	MS27406-3	MS27785-21	---
		MS27785-27	---
MS27407-2	MS27407-3		
		MS27786-21	---
MS27408-2	MS27408-3	MS27786-27	---
MS27409-2	MS27409-3	MS27787-21	---
		MS27787-27	---
MS27722-21	---		
MS27722-27	---	MS27788-21	---
		MS27788-27	---
MS27723-21	---		
MS27723-27	---	MS27789-21	---
		MS27789-21	---
MS27724-21	---		
MS27724-27	---	M3950/1-21	---
		M3950/1-27	---
MS27734-21	---	M3950/2-21	---
MS27734-27	---	M3950/2-31	---
MS27735-21	---	M3950/3-21	---
MS27735-27	---	M3950/3-27	---
MS27736-21	---	M3950/4-21	---
MS27736-27	---	M3950/4-31	---
MS27737-21	---	M3950/5-23	---
MS27737-27	---		

Source: https://assist.dla.mil -- Downloaded: 2016-11-13T02:14Z
Check the source to verify that this is the current version before use.

30. Mounting hardware.

30.1 Nut, plain, hexagon electrical, thin:

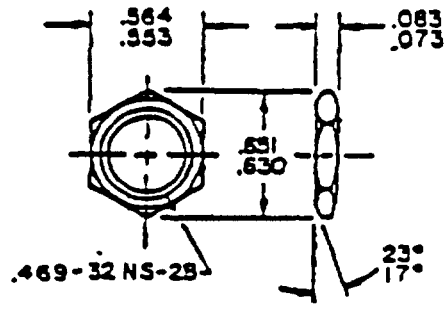

INCHES	MM
.073	1.85
.083	2.11
.468	11.89
.553	14.05
.564	14.33
.630	16.00
.651	16.54

Brass	Material	QQ-B-626, alloy no. 360, half hard
	Finish	Nickel plate QQ-N-290, class 1, grade G (matte)
	MIL hardware	Can be replaced by MS25082-B21
Steel	Material	FED STD No. 66, 55,000 PSI (min sulphur or phosphorus shall not exceed 0.05 by weight)
	Finish	Cadmium plate QQ-P-416, type II, class 3
	MIL hardware	Can be replaced by MS25082-21
Cres	Material	FED STD No. 66
	Finish	Passivate
	MIL hardware	Can be replaced by MS25082-C21

30.2 Washer, lock, flat, internal tooth.

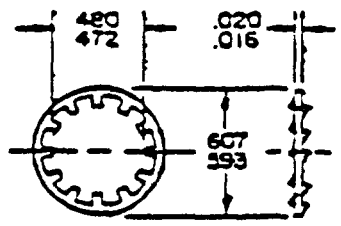

INCHES	MM
.016	.41
.020	.51
.472	11.99
.480	12.19
.593	15.06
.607	15.42

Steel	Material	FF-W-100
	Finish	Cadmium plate QQ-P-416 type II, class 3
	MIL hardware	Can be replaced by MS35333-121
Cres	Material	FF-W-100
	Finish	Passivate
	MIL hardware	None

Source: https://assist.dla.mil -- Downloaded: 2016-11-13T02:14Z
Check the source to verify that this is the current version before use.

30 3 Washer, key

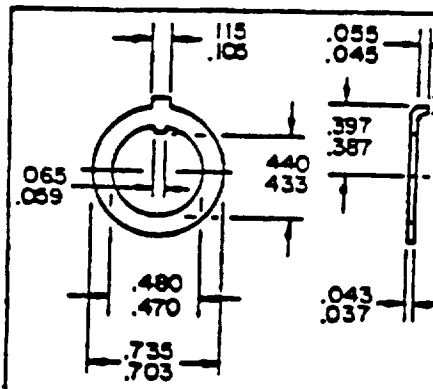

INCHES	MM	INCHES	MM
.037	.94	.387	9.83
.043	1.09	.397	10.08
.045	1.14	.433	11.00
.055	1.40	.440	11.18
.059	1.50	.470	11.94
.065	1.65	.480	12.19
.105	2.67	.703	17.86
.115	2.92	.735	18.67

Steel	Material	QQ-S-698
	Finish	Cadmium plate QQ-P-416, type II, class 3
	MIL hardware	Can be replaced by MS25081-4
Cres	Material	FED STD No. 66
	Finish	Passivate
	MIL hardware	Can be replaced by MS25081-C4

40. Terminal hardware.

40.1 Terminal screw (pan head).

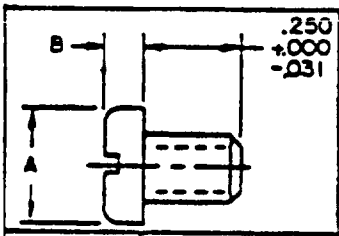

Thread size	A Min	A Max	B Min	B Max
.138-32 UNC-2A	.256	.270	.072	082
.164-32 UNC-2A	.306	.322	.085	.096

Brass	Material	QQ-B-626, alloy no. 360, half hard
	Finish	Silver plate, tin plate or nickel plate QQ-N-290, class 1, grade G (matte)
	MIL hardware	None
Steel	Material	FED STD No. 66, 55,000 PSI (min sulphur or phosphorus shall not exceed 0.05 by weight)
	Finish	Cadmium plate QQ-P-416, type II, class 3
	MIL hardware	Can be replaced by MS35206-226 (.138-32) MS35206-241 (.164-32)
Cres	Material	FED STD No. 66
	Finish	Passivate
	MIL hardware	Can be replaced by MS51957-26 (.138-32) MS51957-41 (.164-32)

INCHES	MM
.031	.79
.072	1.83
.082	2.08
.085	2.16
.096	2.44
.138	3.51
.164	4.17
.250	6.35
.256	6.50
.270	6.86
.306	7.77
.322	8.18

Source: https://assist.dla.mil -- Downloaded: 2016-11-13T02:14Z
Check the source to verify that this is the current version before use.

40.2 Screw with captive internal tooth lockwasher.

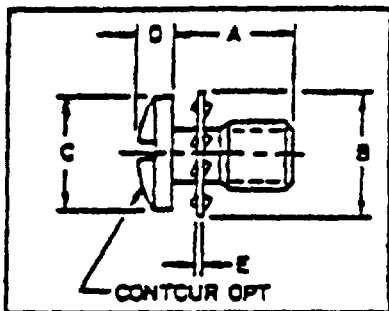

Thread size	A	B	C	D	E
.138-32 UNC-2A	.260 .219	.295 .265	.290 .256	.087 .071	.020 .016
.164-32 UNC-2A	.250 .219	.338 .327	.322 .306	.096 .085	.022 .018

Screw (Brass)	Material	QQ-B-626, alloy no. 360, half hard
	Finish	Silver or tin plate
	MIL hardware	None
Lockwasher (Phos bronze)	Material	QQ-B-750, comp A
	Finish	Silver or tin plate
	MIL hardware	None

INCHES	MM
.016	.41
.018	.46
.020	.51
.022	.56
.071	1.80
.085	2.16
.087	2.21
.096	2.34
.138	3.51
.164	4.17
.219	5.56
.250	6.35
.256	6.50
.260	6.60
.265	6.73
.290	7.37
.295	7.49
.306	7.77
.322	8.18
.327	8.31
.338	8.59

40.3 Washer, lock-spring, helical series.

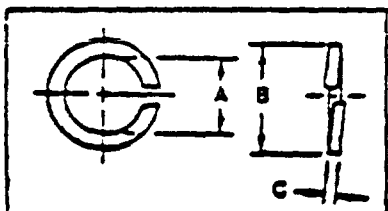

Size	A Min	A Max	B Max	C Min	C Max
.138	.141	.151	.253	031	.037
.164	.168	.178	.296	.040	.046

Steel	Material	QQ-S-700
	Finish	Cadmium plate QQ-P-416, type II, class 3
	MIL hardware	Can be replaced by MS35338-41 (.138) MS35338-42 (.164)
Cres	Material	FED STD No. 66
	Finish	Passivated
	MIL hardware	Can be replaced by MS35338-155 (.138) MS35338-156 (.164)
Bronze	Material	QQ-B-750, composition A, hard
	Finish	Cadmium plate QQ-P-416, type II, class 3
	MIL hardware	Can be replaced by MS35338-98 (.138) MS35338-99 (.164)

INCHES	MM
.031	.79
.037	.94
.040	1.02
.046	1.17
.138	3.51
.141	3.58
.151	3.84
.164	4.17
.168	4.27
.178	4.52
.253	6.43
.296	7.52

NOTES.

1. The captive internal tooth lockwasher on the terminal screw shall rotate freely.
2. The terminal screws with the captive internal tooth lockwasher shall be threaded to within .024 of the lockwasher.
3. The terminal screw (pan head) shall be used in conjunction with the helical series lock-spring washer.
4. Dimensions are in inches.
5. Metric equivalents (to the nearest .01 mm) are given for general information only and are based upon 1 inch = 25.4 mm.

Source: https://assist.dla.mil -- Downloaded: 2016-11-13T02:14Z
Check the source to verify that this is the current version before use.

INSTRUCTIONS: In a continuing effort to make our standardization documents better, the DoD provides this form for use in submitting comments and suggestions for improvements. All users of military standardization documents are invited to provide suggestions. This form may be detached, folded along the lines indicated, taped along the loose edge *(DO NOT STAPLE)*, and mailed. In block 5, be as specific as possible about particular problem areas such as wording which required interpretation, was too rigid, restrictive, loose, ambiguous, or was incompatible, and give proposed wording changes which would alleviate the problems. Enter in block 6 any remarks not related to a specific paragraph of the document. If block 7 is filled out, an acknowledgement will be mailed to you within 30 days to let you know that your comments were received and are being considered.

NOTE This form may not be used to request copies of documents, nor to request waivers, deviations, or clarification of specification requirements on current contracts. Comments submitted on this form do not constitute or imply authorization to waive any portion of the referenced document(s) or to amend contractual requirements.

(Fold along this line)

(Fold along this line)

DEPARTMENT OF THE AIR FORCE

NO POSTAGE NECESSARY IF MAILED IN THE UNITED STATES

OFFICIAL BUSINESS
PENALTY FOR PRIVATE USE $300

BUSINESS REPLY MAIL
FIRST CLASS PERMIT NO 73236 WASHINGTON D C

POSTAGE WILL BE PAID BY THE DEPARTMENT OF THE AIR FORCE

AFLC/MMGE/Standardization
Wright-Patterson AFB OH 45433

Source: https://assist.dla.mil -- Downloaded: 2016-11-13T02:14Z
Check the source to verify that this is the current version before use.

(TO DETACH THIS FORM, CUT ALONG THIS LINE)

STANDARDIZATION DOCUMENT IMPROVEMENT PROPOSAL

(See Instructions – Reverse Side)

1. DOCUMENT NUMBER

2. DOCUMENT TITLE

3a. NAME OF SUBMITTING ORGANIZATION

4. TYPE OF ORGANIZATION *(Mark one)*

- ☐ VENDOR
- ☐ USER
- ☐ MANUFACTURER
- ☐ OTHER *(Specify)* _____

b. ADDRESS *(Street, City, State, ZIP Code)*

5. PROBLEM AREAS

a. Paragraph Number and Wording:

b. Recommended Wording:

c. Reason/Rationale for Recommendation:

6. REMARKS

7a. NAME OF SUBMITTER *(Last, First, MI)* – Optional

b. WORK TELEPHONE NUMBER *(Include Area Code)* – Optional

c. MAILING ADDRESS *(Street, City, State, ZIP Code)* – Optional

8. DATE OF SUBMISSION *(YYMMDD)*

DD FORM 1426, 82 MAR — PREVIOUS EDITION IS OBSOLETE.

Source: https://assist.dla.mil -- Downloaded: 2016-11-13T02:14Z
Check the source to verify that this is the current version before use.