NOT MEASUREMENT SENSITIVE

MIL-STD-701N
31 JANUARY 1990

SUPERSEDING
MIL-STD-701M
9 JUNE 1986

MILITARY STANDARD

LISTS OF STANDARD SEMICONDUCTOR DEVICES

AMSC N/A

FSC 59GP

DISTRIBUTION STATEMENT A. Approved for public release; distribution is unlimited.

Source: https://assist.dla.mil -- Downloaded: 2016-12-11T03:47Z
Check the source to verify that this is the current version before use.

FOREWORD

1. This military standard is approved for use by all Departments and Agencies of the Department of Defense.

2. Beneficial comments (recommendations, additions, deletions) and any pertinent data which may be of use in improving this document should be addressed to: Director, Space and Naval Warfare Systems Command, Department of the Navy, ATTN: SPAWAR 8111, Washington, DC 20363 by using the self-addressed standardization Document Improvement Proposal (DD Form 1426) appearing at the end of this document or by letter.

Source: https://assist.dla.mil -- Downloaded: 2016-12-11T03:47Z
Check the source to verify that this is the current version before use.

CONTENTS

			Page
PARAGRAPH	1.	SCOPE	1
	1.1	Scope	1
	2.	APPLICABLE DOCUMENTS	2
	2.1	Government documents	2
	2.1.1	Specifications	2
	3.	DEFINITIONS	3
	4.	GENERAL REQUIREMENTS	4
	4.1	Purpose	4
	4.2	Selection of semiconductor devices	4
	4.3	Use of semiconductor devices	4
	4.3.1	Controlled characteristics	4
	4.3.2	Correlation of circuit requirements and detail specification test conditions	4
	4.4	Criteria for inclusion in this standard	4
	4.5	Lists of semiconductor devices	4
	4.5.1	TX types and TXV types	4
	4.5.1.1	Dash one (-1) parts	4
	4.5.2	Reverse polarity types	5
	4.5.3	Surface mount	5
	4.6	Conflict of data	5
	5.	DETAILED REQUIREMENTS (not applicable)	6
	6.	NOTES	7
	6.1	Dimensions	7
	6.2	Metric equivalents	7
	6.3	International standardization agreement	7
	6.4	Parameter values	7
	6.5	Qualified products list	7
	6.6	Case outline	7
	6.7	Subject terms (key word) listing	7
	6.8	Changes from previous issue	7

TABLES

TABLE	I	Switching diodes	8
	II	Axial-lead power rectifiers	8
	III	Fast-recovery rectifiers	9
	IV	Power rectifiers	10
	V	Schottky diodes	10
	VI	High-voltage rectifier assemblies	11
	VII	High current, full wave, bridge rectifiers	11
	VIII	Multiple diode arrays	13
	IX.	Voltage reference diodes	14
	X	Voltage regulator diodes	15-17
	XI	Voltage-variable capacitor diodes	18
	XII	Current regulator diodes	19
	XIII	Transient suppressor diodes (bidirectional)	20
	XIV	Transient suppressor diodes (unidirectional)	21

Source: https://assist.dla.mil -- Downloaded: 2016-12-11T03:47Z
Check the source to verify that this is the current version before use.

TABLES - Continued

			Page
TABLE	XV	Light emitting diodes	21
	XVI	Thyristors (silicon controlled rectifiers)	22
	XVII	Optically coupled isolators	23
	XVIII	NPN low-power transistors	24
	XIX	PNP low-power transistors	25
	XX	NPN power transistors	26
	XXI	PNP power transistors	27
	XXII	RF transistors	28
	XXIII	Dual transistors (differential amplifier)	29
	XXIV	Dual transistors	30
	XXV	Darlington transistors	31
	XXVI	Unijunction transistors	32
	XXVII	Junction field effect transistors	33
	XXVIII	Low-power chopper transistors	34
	XXIX	MOS FET, power	35
	XXX	Numerical listing of device types	36-40
	XXXI	Numerical listing of thyristors	41

FIGURE

FIGURE	1	Case outlines	12

Source: https://assist.dla.mil -- Downloaded: 2016-12-11T03:47Z
Check the source to verify that this is the current version before use.

1. SCOPE

1.1 Scope. This standard establishes the requirements for the selection of semiconductor devices used in the design and manufacture of military equipment.

Source: https://assist.dla.mil -- Downloaded: 2016-12-11T03:47Z
Check the source to verify that this is the current version before use.

2. APPLICABLE DOCUMENTS

2.1 Government documents.

2.1.1 Specification. The following specification, forms a part of this specification to the extent specified herein. Unless otherwise specified, the issues of these documents shall be those listed in the issue of the Department of Defense Index of Specifications and Standards (DODISS) and supplement thereto, cited in the solicitation.

SPECIFICATION

MILITARY

MIL-S-19500 - Semiconductor Devices, General Specification for.

(Unless otherwise indicated, copies of federal and military specifications, standards, and handbooks are available from the Naval Publications and Forms Center, (ATTN: NPODS), 5801 Tabor Avenue, Philadelphia, PA 19120-5099.)

2.2 Order of precedence. In the event of a conflict between the text of this document and the references cited herein, the text of this document takes precedence. Nothing in this document, however, supersedes applicable laws and regulations unless a specific exemption has been obtained.

Source: https://assist.dla.mil -- Downloaded: 2016-12-11T03:47Z
Check the source to verify that this is the current version before use.

3. DEFINITIONS

3.1 Definitions. The terms used in this standard are defined in MIL-S-19500.

Source: https://assist.dla.mil -- Downloaded: 2016-12-11T03:47Z
Check the source to verify that this is the current version before use.

4. GENERAL REQUIREMENTS

4.1 Purpose. The purpose of this standard is as follows:

a. To provide equipment designers and manufacturers with lists of semiconductor devices considered to be standard for military applications.

b. To control and minimize the variety of semiconductor devices used by military activities in order to facilitate effective logistic support of equipment in the field; to maximize economic support of, and to concentrate improvement on, production of the semiconductor devices listed in this standard.

4.2 Selection of semiconductor devices. Semiconductor device types must be selected from those types listed in this standard. The variety of semiconductor devices used in any military equipment shall be the minimum necessary to provide satisfactory performance.

4.3 Use of semiconductor devices.

4.3.1 Controlled characteristics. Satisfactory equipment performance shall depend only on a semiconductor device characteristic which is controlled by the applicable MIL-S-19500 detail specification.

4.3.2 Correlation of circuit requirements and detail specification test conditions. When an application condition varies widely from the detail specification test condition(s), it shall be the responsibility of the contractor to establish satisfactory correlation between the circuit requirements and the detail specification requirements.

4.4 Criteria for inclusion in this standard.

a. The semiconductor device shall be considered by representatives of the military departments, the best available type for current application.

b. Continued availability of the semiconductor device shall be reasonably certain.

c. The semiconductor device shall have an approved military specification.

4.5 Lists of semiconductor devices. Tables included herein list the ratings and primary electrical characteristics and applicable specification number for all semiconductor devices approved as standard for use in the design and manufacture of military equipment. (Complete detailed requirements for semiconductor devices listed in this standard are covered in the applicable detail specification.) All devices listed herein are silicon types except for the devices listed in table XIV.

4.5.1 TX, TXV, and S types. Only the JANTX, JANTXV, and JANS versions of semiconductor device types listed herein are approved for use. The prefix JANTX is used on devices which have been submitted to and have passed special process-conditioning, testing and screening and the prefix JANTXV is used on devices which have been submitted to a visual precap inspection in addition to the process-conditioning, testing and screening. The JANS prefix is used on devices which have been subject to special certification, process-conditioning testing, screening, precap visual, radiography, particle tests, and other tests for space flight quality level.

4.5.1.1 Dash one (-1) parts. Where dash one (-1) parts are available on the detail specification and listed on QPL-19500, they shall be considered to be the preferred types.

Source: https://assist.dla.mil -- Downloaded: 2016-12-11T03:47Z
Check the source to verify that this is the current version before use.

4.5.2 Reverse polarity types. The reverse polarity versions of semiconductor device types listed herein, are also approved for use.

4.5.3 Surface mount. Surface mount versions of devices signified by "U" suffix are also approved for use.

4.6 Conflict of data. In the event of conflict between the technical description of semiconductor devices listed in this standard and the applicable specification, the specification shall govern.

Source: https://assist.dla.mil -- Downloaded: 2016-12-11T03:47Z
Check the source to verify that this is the current version before use.

5. DETAILED REQUIREMENTS (not applicable).

Source: https://assist.dla.mil -- Downloaded: 2016-12-11T03:47Z
Check the source to verify that this is the current version before use.

6. NOTES

(This section contains information of a general or explanatory nature that may be helpful, but is not mandatory.)

6.1 Dimensions are in inches.

6.2 Metric equivalents are given for general information only.

6.3 International standardization agreements. Certain provisions of this standard are the subject of international standardization agreement NATO Electronic Parts Recommendation (NEPR) 19. When revision or cancellation of this standard is proposed which will affect or violate the international agreement concerned, the preparing activity will take appropriate reconciliatory action through international standardization channels, including departmental standardization offices, if required.

6.4 Parameter values. Every reasonable effort is made to insure that this standard lists the most recent parameter values for the devices listed. However, users are cautioned to verify all values against the current revision of the applicable detail specification.

6.5 Qualified products list. Some of the device types listed in this standard may not be listed on QPL-19500. The preparing activity may be contacted to obtain the up-to-date status of the QPL. (See procedures and notes in QPL-19500.)

6.6 Case outline. 'SM' in the case column indicates inclusion of a surface mount case configuration on the specification. Case dimensions must be obtained from the specification but 'SM' in this standard does not guarantee QPL availability.

6.7 Subject terms (key word) listing.

Semiconductor device
Diode
Rectifier
Transistor
Thyristor

6.8 Changes from previous issue. Marginal notations are not used in this revision to identify changes with respect to the previous issue due to the extensiveness of the changes.

Source: https://assist.dla.mil -- Downloaded: 2016-12-11T03:47Z
Check the source to verify that this is the current version before use.

TABLE I. Switching diodes (listed in order of increasing trr).

Device type number	Time trr(max) (ns)	V_{RWM} (V dc) (V pk)	V_F at I_F (V)	V_F at I_F (mA)	I_R at V_{RWM} at 25°C (µA)	I_R at V_{RWM} at T_A 150°C (µA)	I_F to I_R	C (max) (pF)	Case outline	Specification MIL-S-19500/
1N4454-1	4.0	50	1.0	10	0.1	100	$I_F = I_R = 10$ mA	2.0	D035	144
1N4153-1	4.0	50	0.880	20	0.05	50	$I_F = I_R = 10$ mA	2.0	D035	337
1N4150-1	4.0	50	1.0	200	0.1	100	$I_F = I_R = 10$ mA to 200 mA	2.5	D035	231
1N4148-1	5.0	75	1.0	10	0.5	100	$I_F = I_R = 10$ mA	4.0	D035	116
1N4938-1	50.0	175	1.0	100	0.1	100	$I_F = I_R = 10$ mA	5.0	D035	169
1N5711 1/	2/	50	1.0	15	0.2	200			D035	444
1N5712 1/	2/	16	1.0	35	0.15	100			D035	445
1N5719 3/	4/	100	1.0	100	0.25	15		0.3	D035	443
1N6638 5/	4.5	125	1.1	200	0.025	40	$I_F = I_R = 10$ mA	2.0	SM	578
1N6642 5/	5.0	75	1.2	100	0.025	50	$I_F = I_R = 10$ mA	5.0	SM	578
1N6643 5/	6.0	50	1.2	100	0.050	75	$I_F = I_R = 10$ mA	5.0	SM	578

1/ Schottky barrier type.
2/ Minority carrier lifetime equals 100 picoseconds, maximum.
3/ PIN type.
4/ Effective carrier lifetime equals 100 ns, minimum.
5/ 1N6638, 1N6642, and 1N6643 are full area high temperature metallurgically bonded construction which are immune by design to intermittencies caused by thermal cycling and vibration and should be used in tactical, airborne, missile, and space flight applications.

TABLE II. Axial-lead power rectifiers.

Device type number	V_{RWM} (V pk)	Maximum V_{FM} at I_F *(V pk) (V dc)	Maximum V_{FM} at I_F *(A pk) (A dc)	Maximum I_R at V_{RWM} at 25°C (µA dc)	Maximum I_R at V_{RWM} at T_A 100°C (µA dc)	Maximum I_O at 55°C FWD I 1 cyc avg (A dc)	Maximum T_{OP} (°C)	Case outline	Specification MIL-S-19500/
1N5551	400	*1.2	*9 1/	1.0	75	3.0	175	D0204	420
1N5552	600	*1.2	*9 1/	1.0	75	3.0	175	D0204	420
1N5553	800	*1.3	*9 1/	1.0	75	3.0	175	D0204	420
1N5554	1000	*1.3	*9 1/	1.0	75	3.0	175	D0204	420
1N5616	400	1.2	1	0.5	25	1.0	200	D0204	427
1N5618	600	1.2	1	0.5	25	1.0	200	D0204	427
1N5620	800	1.2	1	0.5	25	1.0	200	D0204	427
1N5622	1000	1.2	1	0.5	25	1.0	200	D0204	427

1/ Duty cycle $\leq$ 2 percent, t_p = 1/120 s.

Source: https://assist.dla.mil -- Downloaded: 2016-12-11T03:47Z
Check the source to verify that this is the current version before use.

TABLE III. Fast-recovery rectifiers (listed in order of t_{rr}.)

Device type number	Recovery time t_{rr} (ns)	V_{RWM} (V)	I_O at T_A 55°C *T_C 100°C (A)	I_{FSM} at 1/120 s (A)	Max reverse current at rated V_R at: I_R T_A 25°C (μA)	Max reverse current at rated V_R at: I_R T_A 150°C *T_C 100°C (μA)	Case outline	Specification MIL-S-19500/
1N5804	25	100	1	35	1.0		Axial	477
1N5806	25	150	1	35	1.0		Axial	477
1N5809	30	100	3	125	5.0		Axial	477
1N5811	30	150	3	125	5.0		Axial	477
1N5814	35	100	*20	250	10.0	500	1/ D04	478
1N5816	35	150	*20	250	10.0	500	1/ D04	478
1N6304	50	50	70	1000	25.0		1/ D05	550
1N6305	50	100	70	1000	25.0		1/ D05	550
1N6306	50	150	70	1000	25.0		1/ D05	550
1N5615	150	200	1	25	0.5	25	Axial	429
1N5417	150	200	3	50	1.0	20	Axial	411
1N5617	150	400	1	25	0.5	25	Axial	429
1N5418	150	400	3	50	1.0	20	Axial	411
1N3891	200	200	*12	150	25.0	*3000	1/ D04	304
1N3911	200	200	*30	300	80.0	*10000	1/ D05	308
1N3893	200	400	*12	150	25.0	*3000	1/ D04	304
1N3913	200	400	*30	300	80.0	*10000	1/ D05	308
1N5419	250	500	3	50	1.0	20	Axial	411
1N5619	250	600	1	25	0.5	25	Axial	429
1N5621	300	800	1	25	0.5	25	Axial	429
1N5420	400	600	3	50	1.0	20	Axial	411
1N5623	500	1000	1	25	0.5	25	Axial	429

NOTE: When finalized the 1N6620-6631 should be added to this table.
1/ *Straight and reverse polarity types available.*

Source: https://assist.dla.mil -- Downloaded: 2016-12-11T03:47Z
Check the source to verify that this is the current version before use.

TABLE IV. Power rectifers (listed in order of maximum dc output current).

Device type number	I_O at T_C 150°C (A dc)	V_{RWM} (V pk)	I_{FSM} at 1/120 s (A)	Maximum I_R at V_{RWM}		Case outline	Specification MIL-S-19500/
				at T_C 25°C	T_C 150°C		
1N1202A	12	200	240	50 µA	1 mA	D04	260
1N1204A	12	400	240	50 µA	1 mA	D04	260
1N1206A	12	600	240	50 µA	1 mA	D04	260
1N3671A	12	800	240	50 µA	1 mA	D04	260
1N3673A	12	1000	240	50 µA	1 mA	D04	260
1N1186	35	200	500	250 µA	3 mA	D05	297
1N1188	35	400	500	250 µA	3 mA	D05	297
1N1190	35	600	500	250 µA	3 mA	D05	297
1N3766	35	800	500	250 µA	3 mA	D05	297
1N3768	35	1000	500	250 µA	3 mA	D05	297

TABLE V. Schottky power rectifiers.

Device type number	V_{RWM} (V pk)	Maximum V_{FM} at I_{FM} *(V pk)	*(A pk)	Maximum I_R at V_{RWM} at 25°C (mA pk)	at T_A 175°C (mA pk)	Maximum I_O T_C = 125 *T_C = 115 A dc	Maximum T_{op} (°C)	Case outline	Specification MIL-S-19500/
1N6391	45	.68	50	15	400	22.5	175	D04	553
1N6392	45	.82	120	20	600	*54.0	175	D05	554

NOTE: When qualified, the 1N6492 should be added to this table.

Source: https://assist.dla.mil -- Downloaded: 2016-12-11T03:47Z
Check the source to verify that this is the current version before use.

TABLE VI. High-voltage rectifier assemblies (listed in order of increasing reverse voltage).

Device type number	V_{RWM}	V_F (V dc)	I_O (max) at T_A (mA)	I_O (max) at T_A °C	I_{FSM} at 1/120 s (A)	T_A (°C)	Maximum I_R at V_{RWM} at T_A 25°C (μA)	Case outline	Specification MIL-S-19500/
1N3644	1500	5.0	250	25	14	25	5	1/	279
1N3645	2000	5.0	250	25	14	25	5	1/	279
1N3646	2500	5.0	250	25	14	25	5	1/	279
1N3647	3000	5.0	250	25	14	25	5	1/	279

1/ Cylindrical .315 inch X .090 inch maximum.

NOTE: The following new specification with the included devices are not yet qualified. They should be added to this table when qualified:

MIL-S-19500/575 1N6512 through 19
MIL-S-19500/576 1N6520 through 27
MIL-S-19500/577 1N6528 through 35

TABLE VII. High current, full wave, bridge rectifiers listed in order of increasing I_O.

Phase	Device type number	V_{RWM}	I_O at T_C = 55°C T_L = 55°C (A)	I_{FSM} t_p = 8.3 ms at T_C = 55°C T_L = 55°C (A) (pk)	Case outline	Specification MIL-S-19500/
Single	M19500/469-01	200	10	100	See figure 1	469
Single	M19500/469-02	400	10	100		469
Single	M19500/469-03	600	10	100		469
Single	M19500/469-04	800	10	100		469
Single	M19500/469-05	1000	10	100		469
Single	SPA25	100	25	150	See figure 1	446
Single	SPB25	200	25	150		446
Single	SPC25	400	25	150		446
Single	SPD25	600	25	150		446
Three	M19500/483-01	200	25	150	See figure 1	483
Three	M19500/483-02	400	25	150		483
Three	M19500/483-03	600	25	150		483

Source: https://assist.dla.mil -- Downloaded: 2016-12-11T03:47Z
Check the source to verify that this is the current version before use.

Device types 469-XX

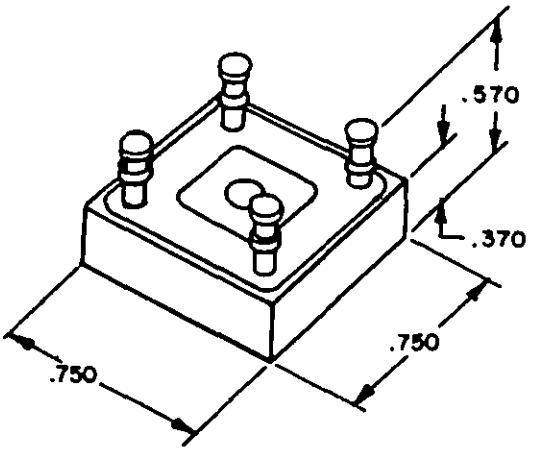

Device types SP*25

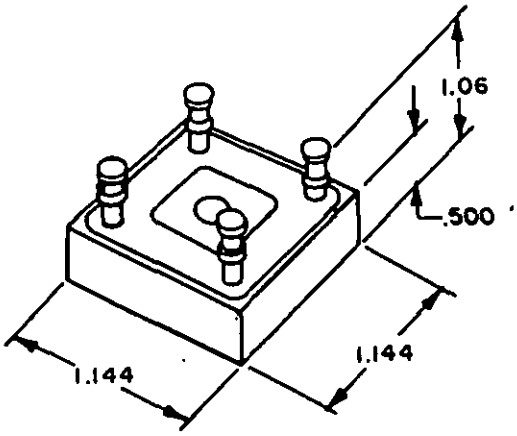

Device types 483-XX

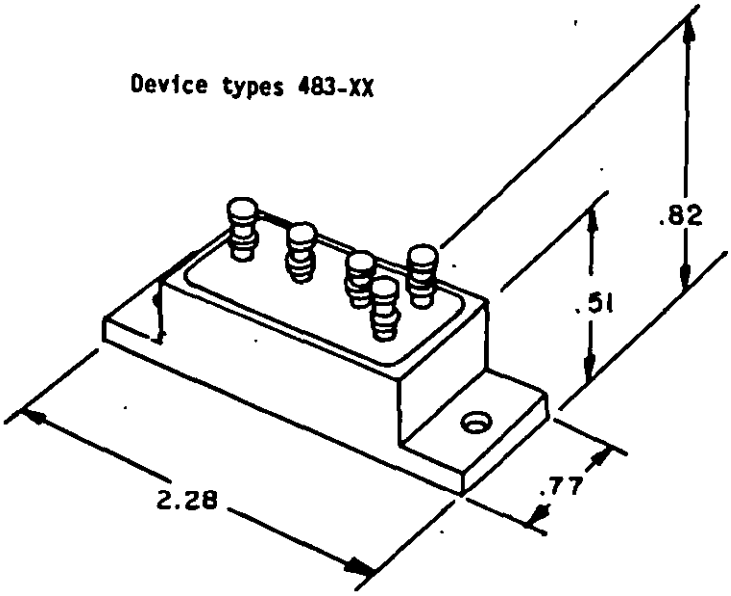

Inches	mm
.370	9.39
.500	12.70
.51	12.9
.570	14.48
.750	19.05
.77	19.5
.82	20.4
1.06	26.9
1.144	29.06
2.28	57.9

FIGURE 1. Case outlines.

Source: https://assist.dla.mil -- Downloaded: 2016-12-11T03:47Z
Check the source to verify that this is the current version before use.

TABLE VIII. Multiple diode arrays (individual diode ratings).

Device type number	I_O T_A = 25°C (mA dc)	V_{BR}	V_F at I_F at 100 mA (V dc)	I_R at V_R at 40 V dc (μA dc)	t_{rr} (ns)	C_T (pF)	Outline and schematic	Specification MIL-S-19500/
1N6511	300	75	1.0	0.1	5	4	DIP	474
1N6101		75			5	4		
1N6506		60			20	4		
1N6507		60			20	8		
1N6508		60			20	8		
1N6509		60			20	8		

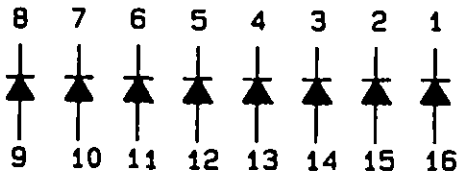

1N6101

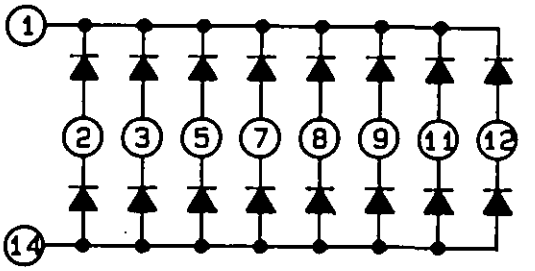

4 6 10 13 NO INTERNAL CONNECTIONS

COMMON ANODE/COMMON CATHODE
1N6508
(DIP)

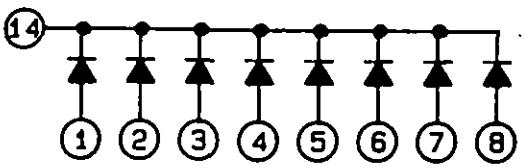

9 10 11 12 13 NO INTERNAL CONNECTIONS

COMMON CATHODE
1N6506
(DIP)

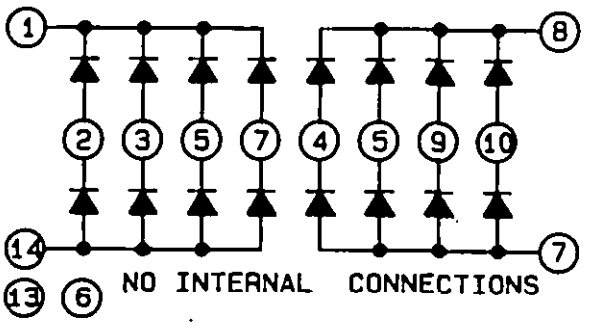

13 6 NO INTERNAL CONNECTIONS

DUAL COMMON ANODE/COMMON CATHODE
1N6509 (DIP)

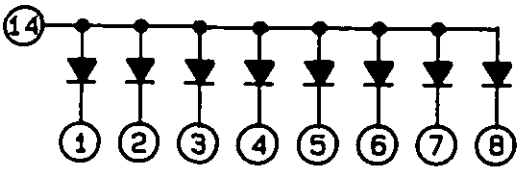

9 10 11 12 13 NO INTERNAL CONNECTIONS

COMMON CATHODE
1N6507
(DIP)

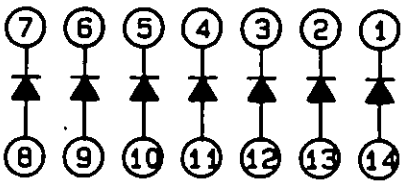

1N6511
(DIP)

Source: https://assist.dla.mil -- Downloaded: 2016-12-11T03:47Z
Check the source to verify that this is the current version before use.

TABLE IX. Voltage reference diodes (listed in order of voltage range).

Device type number	Reference voltage range		Voltage temp stability	Dynamic impedance		Max. temp.	Case out-line	Specification MIL-S-19500/
	$V_{(BR)}$ Min (V)	$V_{(BR)}$ Max (V)	$\Delta V_{(BR)}$ (V)	Z (ohms)	at Z (mA)	(°C)		
1N821-1	5.90	6.50	0.096	15	7.5	175	D07	159
1N823-1	5.90	6.50	0.048	15	7.5	175	D07	159
1N825-1	5.90	6.50	0.019	15	7.5	175	D07	159
1N827-1	5.90	6.50	0.009	15	7.5	175	D07	159
1N829-1	5.90	6.50	0.005	15	7.5	175	D07	159
1N4565A-1	6.08	6.72	0.100	200	0.5	175	D07	452
1N4566A-1	6.08	6.72	0.050	200	0.5	175	D07	452
1N4567A-1	6.08	6.72	0.020	200	0.5	175	D07	452
1N4568A-1	6.08	6.72	0.010	200	0.5	175	D07	452
1N4569A-1	6.08	6.72	0.005	200	0.5	175	D07	452
1N4570A-1	6.08	6.72	0.100	100	1.0	175	D07	452
1N4571A-1	6.08	6.72	0.050	100	1.0	175	D07	452
1N4572A-1	6.08	6.72	0.020	100	1.0	175	D07	452
1N4573A-1	6.08	6.72	0.010	100	1.0	175	D07	452
1N4574A-1	6.08	6.72	0.005	100	1.0	175	D07	452
1N3154-1	8.00	8.80	0.130	15	10.0	175	D07	158
1N3155-1	8.00	8.80	0.065	15	10.0	175	D07	158
1N3156-1	8.00	8.80	0.026	15	10.0	175	D07	158
1N3157-1	8.00	8.80	0.013	15	10.0	175	D07	158
1N935B-1	8.55	9.45	0.184	20	7.5	175	D07	156
1N937B-1	8.55	9.45	0.037	20	7.5	175	D07	156
1N938B-1	8.55	9.45	0.018	20	7.5	175	D07	156
1N939B-1	8.55	9.45	0.009	20	7.5	175	D07	156
1N940B-1	8.55	9.45	0.0037	20	7.5	175	D07	156
1N941B-1	11.12	12.28	0.239	30	7.5	175	D07	157
1N943B-1	11.12	12.28	0.047	30	7.5	175	D07	157
1N944B-1	11.12	12.28	0.024	30	7.5	175	D07	157
1N945B-1	11.12	12.28	0.012	30	7.5	175	D07	157

Source: https://assist.dla.mil -- Downloaded: 2016-12-11T03:47Z
Check the source to verify that this is the current version before use.

TABLE X. Voltage regulator diodes.

V_Z (nom) (V dc)	Device type number (listed by P_T)								
	Specification MIL-S-19500/								
	127	117	435	533 1/	406	356	272 2/	124 2/	114 2/
	400 mW	400 mW	400 mW	500 mW	1.5 W	5 W 3/	10 W	10 W	50 W
	Axial	Axial	Axial	Axial	Axial	Axial	DO4	DO4	TO3
1.8			1N4614-1						
2.0			1N4615-1						
2.2			1N4616-1						
2.4	1N4370A-1		1N4617-1	1N6309					
2.7	1N4371A-1		1N4618-1	1N6310					
3.0	1N4372A-1		1N4619-1	1N6311					
3.3	1N746A-1		1N4620-1	1N6312	1N6485	1N6632			
3.6	1N747A-1		1N4621-1	1N6313	1N6486	1N6633			
3.9	1N748A-1		1N4622-1	1N6314	1N6487	1N6634	1N3993A		1N4557B
4.3	1N749A-1		1N4623-1	1N6315	1N6488	1N6635	1N3994A		1N4558B
4.7	1N750A-1		1N4624-1	1N6316	1N6489	1N6636	1N3995A		1N4559B
5.1	1N751A-1		1N4625-1	1N6317	1N6490	1N6637	1N3996A		1N4560B
5.6	1N752A-1		1N4626-1	1N6318	1N6491	1N5968	1N3997A		1N4561B
6.2	1N753A-1		1N4627-1	1N6319	1N4460	1N5969	1N3998A		1N4562B
6.8	1N754A-1		1N4099-1	1N6320	1N4461	1N4954	1N3999A	1N2970B	1N2804B
7.5	1N755A-1		1N4100-1	1N6321	1N4462	1N4955	1N4000A	1N2971B	1N2805B
8.2	1N756A-1		1N4101-1	1N6322	1N4463	1N4956		1N2972B	1N2806B
8.7			1N4102-1						
9.1	1N757A-1		1N4103-1	1N6323	1N4464	1N4957		1N2973B	1N2807B
10.0	1N758A-1		1N4104-1	1N6324	1N4465	1N4958		1N2974B	1N2808B
11.0		1N962B-1	1N4105-1	1N6325	1N4466	1N4959		1N2975B	1N2809B
12.0	1N759A-1	1N963B-1	1N4106-1	1N6326	1N4467	1N4960		1N2976B	1N2810B
13.0		1N964B-1	1N4107-1	1N6327	1N4468	1N4961		1N2977B	1N2811B
14.0			1N4108-1						
15.0		1N965B-1	1N4109-1	1N6328	1N4469	1N4962		1N2979B	1N2813B
16.0		1N966B-1	1N4110-1	1N6329	1N4470	1N4963		1N2980B	1N2814B
17.0			1N4111-1						
18.0		1N967B-1	1N4112-1	1N6330	1N4471	1N4964		1N2982B	1N2816B
19.0			1N4113-1						
20.0		1N968B-1	1N4114-1	1N6331	1N4472	1N4965		1N2984B	1N2818B

See footnotes at end of table.

Source: https://assist.dla.mil -- Downloaded: 2016-12-11T03:47Z
Check the source to verify that this is the current version before use.

TABLE X. Voltage regulator diodes - Continued.

V_Z (nom) (V dc)	Device type number (listed by P_T)								
	Specification MIL-S-19500/								
	127	117	435	533 1/	406	356	272 2/	124 2/	114 2/
	400 mW	400 mW	400 mW	500 mW	1.5 W	5 W 3/	10 W	10 W	50 W
	Axial	Axial	Axial	Axial	Axial	Axial	DO4	DO4	TO3
22.0		1N969B-1	1N4115-1	1N6332	1N4473	1N4966		1N2985B	1N2819B
24.0		1N970B-1	1N4116-1	1N6333	1N4474	1N4967		1N2986B	1N2820B
25.0			1N4117-1						
27.0		1N971B-1	1N4118-1	1N6334	1N4475	1N4968		1N2988B	1N2822B
28.0			1N4119-1						
30.0		1N972B-1	1N4120-1	1N6335	1N4476	1N4969		1N2989B	1N2823B
33.0		1N973B-1	1N4121-1		1N4477	1N4970		1N2990B	1N2824B
36.0		1N974B-1	1N4122-1		1N4478	1N4971		1N2991B	1N2825B
39.0		1N975B-1	1N4123-1		1N4479	1N4972		1N2992B	1N2826B
43.0		1N976B-1	1N4124-1		1N4480	1N4973		1N2993B	1N2827B
47.0		1N977B-1	1N4125-1		1N4481	1N4974		1N2995B	1N2829B
51.0		1N978B-1	1N4126-1		1N4482	1N4975		1N2997B	1N2831B
56.0		1N979B-1	1N4127-1		1N4483	1N4976		1N2999B	1N2832B
60.0			1N4128-1						
62.0		1N980B-1	1N4129-1		1N4484	1N4977		1N3000B	1N2833B
68.0		1N981B-1	1N4130-1		1N4485	1N4978		1N3001B	1N2834B
75.0		1N982B-1	1N4131-1		1N4486	1N4979		1N3002B	1N2835B
82.0		1N983B-1	1N4132-1		1N4487	1N4980		1N3003B	1N2836B
87.0			1N4133-1						
91.0		1N984B-1	1N4134-1		1N4488	1N4981		1N3004B	1N2837B
100.0		1N985B-1	1N4135-1		1N4489	1N4982		1N3005B	1N2838B

See footnotes at end of table.

Source: https://assist.dla.mil -- Downloaded: 2016-12-11T03:47Z
Check the source to verify that this is the current version before use.

TABLE X. Voltage regulator diodes - Continued.

V_Z (nom) (V dc)	Device type number (listed by P_T)								
	Specification MIL-S-19500/								
	127	117	435	533 1/	406	356	272 2/	124 2/	114 2/
	400 mW	400 mW	400 mW	500 mW	1.5 W	5 W 3/	10 W	10 W	50 W
	Axial	Axial	Axial	Axial	Axial	Axial	DO4	DO4	TO3
110.0		1N986B-1			1N4490	1N4983		1N3007B	1N2840B
120.0		1N987B-1			1N4491	1N4984		1N3008B	1N2841B
130.0		1N988B-1			1N4492	1N4985		1N3009B	1N2842B
150.0		1N989B-1			1N4493	1N4986		1N3011B	1N2843B
160.0		1N990B-1			1N4494	1N4987		1N3012B	1N2844B
180.0		1N991B-1			1N4495	1N4988		1N3014B	1N2845B
200.0		1N992B-1			1N4496	1N4989		1N3015B	1N2846B
220.0						1N4990			
240.0						1N4991			
270.0						1N4992			
300.0						1N4993			
330.0						1N4994			
360.0						1N4995			
390.0						1N4996			

1/ These devices are thermally matched, voidless, high temperature hard glass, full area metallurgically bonded construction and suitable for use in space flight and other high reliability applications.
2/ Reverse polarity device types available.
3/ T_L = 75°C, L = 0.375 in.

Source: https://assist.dla.mil -- Downloaded: 2016-12-11T03:47Z
Check the source to verify that this is the current version before use.

TABLE XI. Voltage-variable capacitor diodes (listed in order of nominal capacitance) (all are 0.4 W).

Device type number	C_T at 4 V (pF)	Cap. ratio from $V_R(1)$ to $V_R(2)$ (max)	$V_R(1)$ (V dc)	$V_R(2)$ (V dc)	V_{RWM} (V)	$V_{(BR)}$ at 10 V (V dc)	Q (min)	Conditions Freq (MHz)	Conditions V_R (V dc)	Case outline	Specification MIL-S-19500/
1N5139A	6.8	2.7	4.0	60	60	65	350	50	4	D07	383
1N5461B	6.8	3.1	2.0	30	30	30	600	50	4	D07	436
1N5462B	8.2	3.1	2.0	30	30	30	600	50	4	D07	436
1N5140A	10.0	2.8	4.0	60	60	65	300	50	4	D07	383
1N5463B	10.0	3.1	2.0	30	30	30	550	50	4	D07	436
1N5141A	12.0	2.8	4.0	60	60	65	300	50	4	D07	383
1N5464B	12.0	3.1	2.0	30	30	30	550	50	4	D07	436
1N5142A	15.0	2.8	4.0	60	60	65	250	50	4	D07	383
1N5465B	15.0	3.1	2.0	30	30	30	550	50	4	D07	436
1N5143A	18.0	2.8	0.1	60	60	65	250	50	4	D07	383
1N5466B	18.0	3.1	2.0	30	30	30	500	50	4	D07	436
1N5467B	20.0	3.1	2.0	30	30	30	500	50	4	D07	436
1N5144A	22.0	3.2	4.0	60	60	65	200	50	4	D07	383
1N5468B	22.0	3.2	2.0	30	30	30	500	50	4	D07	436
1N5145A	27.0	3.2	4.0	60	60	65	200	50	4	D07	383
1N5469B	27.0	3.2	2.0	30	30	30	500	50	4	D07	436
1N5146A	33.0	3.2	4.0	60	60	65	200	50	4	D07	383
1N5470B	33.0	3.2	2.0	30	30	30	500	50	4	D07	436
1N5147A	39.0	3.2	4.0	60	60	65	200	50	4	D07	383
1N5471B	39.0	3.2	2.0	30	30	30	450	50	4	D07	436
1N5148A	47.0	3.2	4.0	60	60	65	200	50	4	D07	383
1N5472B	47.0	3.2	2.0	30	30	30	400	50	4	D07	436
1N5473B	56.0	3.3	2.0	30	30	30	500	50	4	D07	436
1N5474B	68.0	3.3	2.0	30	30	30	250	50	4	D07	436
1N5475B	82.0	3.3	2.0	30	30	30	225	50	4	D07	436
1N5476B	100.0	3.3	2.0	30	30	30	200	50	4	D07	436

Source: https://assist.dla.mil -- Downloaded: 2016-12-11T03:47Z
Check the source to verify that this is the current version before use.

TABLE XII. Current regulator diodes (P_T = 600 mW).

Device type number	I_P Regulator current (mA) at V_T = 25 V ±10% (Nom)	Z_T Minimum dynamic impedance at V_T = 25 V (mΩ)	Z_K Minimum knee impedance at V_K = 6 V (mΩ)	V_L Maximum limiting voltage at I_L = 0.8 I_P (min) (Volts)	T_{CIP} Maximum regulator current T_C at V_T = 25 V -55°C +25°C (%/°C)	T_{CIP} Maximum regulator current T_C at V_T = 25 V 25°C +150°C (%/°C)	Case outline	Specification MIL-S-19500/
1N5283	0.22	25.0	2.75	1.00	+1.35	-0.06, +0.70	D07	463
1N5284	0.24	19.0	2.35	1.00	+1.25	-0.10, +0.66	D07	463
1N5285	0.27	14.0	1.95	1.00	-0.10, +1.15	-0.12, +0.58	D07	463
1N5286	0.30	9.0	1.60	1.00	-0.15, +1.05	-0.15, +0.52	D07	463
1N5287	0.33	6.6	1.35	1.00	-0.20, +0.95	-0.16, +0.47	D07	463
1N5288	0.39	4.10	1.00	1.05	-0.30, +0.82	-0.20, +0.38	D07	463
1N5289	0.43	3.30	0.870	1.05	-0.32, +0.75	-0.22, +0.33	D07	463
1N5290	0.47	2.70	0.750	1.05	-0.35, +0.70	-0.23, +0.28	D07	463
1N5291	0.56	1.90	0.560	1.10	-0.40, +0.55	-0.26, +0.20	D07	463
1N5292	0.62	1.55	0.470	1.13	-0.42, +0.45	-0.27, +0.15	D07	463
1N5293	0.68	1.35	0.400	1.15	-0.45, +0.40	-0.28, +0.12	D07	463
1N5294	0.75	1.15	0.335	1.20	-0.50, +0.35	-0.30, +0.07	D07	463
1N5295	0.82	1.00	0.290	1.25	-0.52, +0.27	-0.31, +0.03	D07	463
1N5296	0.91	0.880	0.240	1.29	-0.56, +0.20	-0.32	D07	463
1N5297	1.00	0.800	0.205	1.35	-0.58, +0.15	-0.34	D07	463
1N5298	1.10	0.700	0.180	1.40	-0.60, +0.10	-0.36	D07	463
1N5299	1.20	0.640	0.155	1.45	-0.63, +0.05	-0.37	D07	463
1N5300	1.30	0.580	0.135	1.50	-0.65	-0.38	D07	463
1N5301	1.40	0.540	0.115	1.55	-0.68	-0.39	D07	463
1N5302	1.50	0.510	0.105	1.60	-0.70	-0.40	D07	463
1N5303	1.60	0.475	0.092	1.65	-0.70	-0.40	D07	463
1N5304	1.80	0.420	0.074	1.75	-0.72	-0.41	D07	463
1N5305	2.00	0.395	0.061	1.85	-0.75	-0.42	D07	463
1N5306	2.20	0.370	0.052	1.95	-0.76	-0.42	D07	463
1N5307	2.40	0.345	0.044	2.00	-0.78	-0.43	D07	463
1N5308	2.70	0.320	0.035	2.15	-0.80	-0.43	D07	463
1N5309	3.00	0.300	0.029	2.25	-0.81	-0.43	D07	463
1N5310	3.30	0.280	0.024	2.35	-0.82	-0.44	D07	463
1N5311	3.60	0.265	0.020	2.50	-0.83	-0.44	D07	463
1N5312	3.90	0.255	0.017	2.60	-0.84	-0.45	D07	463
1N5313	4.30	0.245	0.014	2.75	-0.85	-0.45	D07	463
1N5314	4.70	0.235	0.012	2.90	-0.86	-0.45	D07	463

Source: https://assist.dla.mil -- Downloaded: 2016-12-11T03:47Z
Check the source to verify that this is the current version before use.

TABLE XIII. Transient suppressor diodes (bidirectional).

MIL-S-19500/516

Series type		Breakdown voltage $V_{(BR)}$ Min 1/	Breakdown voltage $V_{(BR)}$ Max 1/	Working peak voltage VM(wkg) 1/	Maximum peak surge voltage V_{SM} 2/ 3/		Maximum peak surge current I_{SM} 2/ 3/	
500 W	1500 W	V dc	V dc	V dc	V(pk)	V(pK)	A(pk)	A(pK)
1N6103A	1N6139A	7.13	7.87	5.7	11.2	11.2	44.6	133.9
1N6104A	1N6140A	7.79	8.61	6.2	12.1	12.1	41.3	124.0
1N6105A	1N6141A	8.65	9.55	6.9	13.4	13.4	37.3	111.9
1N6106A	1N6142A	9.50	10.50	7.6	14.5	14.5	34.5	103.4
1N6107A	1N6143A	10.45	11.55	8.4	15.6	15.6	32.0	96.2
1N6108A	1N6144A	11.40	12.60	9.1	16.9	16.9	29.6	88.8
1N6109A	1N6145A	12.35	13.65	9.9	18.2	18.2	27.5	82.4
1N6110A	1N6146A	14.25	15.75	11.4	21.0	21.0	23.8	71.4
1N6111A	1N6147A	15.20	16.80	12.2	22.3	22.3	22.4	67.3
1N6112A	1N6148A	17.10	18.90	13.7	25.1	25.1	19.9	59.8
1N6113A	1N6149A	19.0	21.0	15.2	27.7	27.7	18.0	54.2
1N6114A	1N6150A	20.9	23.1	16.7	30.5	30.5	16.4	49.2
1N6115A	1N6151A	22.8	25.2	18.2	33.3	33.3	15.0	45.0
1N6116A	1N6152A	25.7	28.3	20.6	37.4	37.4	13.4	40.1
1N6117A	1N6153A	28.5	31.5	22.8	41.6	41.6	12.0	36.0
1N6118A	1N6154A	31.4	34.6	25.1	45.7	45.7	10.9	32.8
1N6119A	1N6155A	34.2	37.8	27.4	49.9	49.9	10.0	30.1
1N6120A	1N6156A	37.1	40.9	29.7	53.6	53.6	9.3	28.0
1N6121A	1N6157A	40.9	45.1	32.7	59.1	59.1	8.5	25.4
1N6122A	1N6158A	44.7	49.3	35.8	64.6	64.6	7.7	23.2
1N6123A	1N6159A	48.5	53.5	38.8	70.1	70.1	7.1	21.4
1N6124A	1N6160A	53.2	58.8	42.6	77.0	77.0	6.5	19.5
1N6125A	1N6161A	58.9	65.1	47.1	85.3	85.3	5.9	17.6
1N6126A	1N6162A	64.6	71.4	51.7	97.1	97.1	5.1	15.4
1N6127A	1N6163A	71.3	78.7	56.0	103.1	103.1	4.8	14.5
1N6128A	1N6164A	77.9	86.1	62.2	112.8	112.8	4.4	13.3
1N6129A	1N6165A	86.5	95.5	69.2	125.1	125.1	4.0	12.0
1N6130A	1N6166A	95.0	105.0	76.0	137.6	137.6	3.6	10.9
1N6131A	1N6167A	104.5	115.5	86.6	151.3	151.3	3.3	9.9
1N6132A	1N6168A	114.0	126.0	91.2	165.1	165.1	3.0	9.1
1N6133A	1N6169A	123.5	136.5	98.8	178.8	178.8	2.8	8.4
1N6134A	1N6170A	142.5	157.5	114.0	206.3	206.3	2.4	7.3
1N6135A	1N6171A	152	168	121.6	218.4	218.4	2.3	6.9
1N6136A	1N6172A	171	189	136.8	245.7	245.7	2.0	6.1
1N6137A	1N6173A	190	210	152.0	273.0	273.0	1.8	5.5

1/ Applies to both 500 W and 1500 W series.
2/ Applies to only 500 W series.
3/ Applies to only 1500 W series.

Source: https://assist.dla.mil -- Downloaded: 2016-12-11T03:47Z
Check the source to verify that this is the current version before use.

TABLE XIV. Transient suppressor diodes (unidirectional).

MIL-S-19500/551

Device type number	Breakdown voltage $V_{(BR)}$ at I_{BR} Min	Working peak reverse voltage V_{RWM}	Test current t_p=300ms duty cycle < 2Δ I_{BR}	Maximum clamping voltage $V_{C(max)}$ at I_p for t_p = 1 ms	Maximum peak pulse current (I_p)	
					t_p = 20 μs t_r = 8 μs	t_p = 1 ms t_r = 10 μs
	V dc	V(pk)	mA dc	V(pk)	A(pk)	A(pk)
1N6461	5.6	5	25	9.0	315	56
1N6462	6.5	6	20	11.0	258	46
1N6463	13.6	12	5	22.6	125	22
1N6464	16.4	15	5	26.5	107	19
1N6465	27	24	2	41.4	69	12
1N6466	33	30.5	1	47.5	63	11
1N6467	43.7	40.3	1	63.5	45	8
1N6468	54	51.6	1	78.5	35	6

TABLE XV. Light emitting diodes.

Device type number	(mcd) (min)	(mcd) (typ)	Color	λd (nm) (typ)	C (pF) (max)	VF (V dc) (max)	I_R (μA dc) (max)	Case	Specification MIL-S-19500/
1N6092	1.0	2.5	Red	626	35	3	1	T018	519
M19500/51902	1.0	2.5	Red	626	35	3	1		519
1N6093	1.0	2.5	Yellow	585	35	3	1	T018	520
M19500/52002	1.0	2.5	Yellow	585	35	3	1		520
1N6094	0.8	1.6	Green	570	35	3	1	T018	521
M19500/52102	0.8	1.6	Green	570	35	3	1		521

NOTE: When qualified, 1N6609, 6610, and 6611 should be added to this table.

Source: https://assist.dla.mil -- Downloaded: 2016-12-11T03:47Z
Check the source to verify that this is the current version before use.

TABLE XVI. Thyristors (silicon controlled rectifiers).

Device type number	I_0 (amps)	at °C	Max ratings V_{DRM} 1/ (V)	I_{TSM} (surge) (amps)	t_{on} (μs)	t_{off} (μs)	dv/dt (V/μs)	V_{GT} (V dc)	I_{GT} (mA dc)	Case outline	Specification MIL-S-19500/
2N3027	0.175	100	30	8	0.2	2	30.0	.4/.8	0.20	T018	419
2N3028	0.175	100	60	8	0.2	2	15.0	.4/.8	0.20	T018	419
2N3029	0.175	100	100	8	0.2	2	10.0	.4/.8	0.20	T018	419
2N2323AS	0.22	80	50	15			0.7	.35/.6	0.20	T05	276
2N2324AS	0.22	80	100	15			0.7	.35/.6	0.20	T05	276
2N2326AS	0.22	80	200	15			0.7	.35/.6	0.20	T05	276
2N2328AS	0.22	80	300	15			0.7	.35/.6	0.20	T05	276
2N2329S	0.22	80	400	15			1.8	.35/.8	0.20	T05	276
2N1774A	4.7	105	200	60	5.0	30	5.0	2.0	15.0	T064	168
2N1777A	4.7	105	400	60	5.0	30	5.0	2.0	15.0	T064	168
2N685	16.0	65	200	150	5.0	30	20.0	3.0	35.0	T048	108
2N688	16.0	65	400	150	5.0	30	20.0	3.0	35.0	T048	108
2N690	16.0	65	600	150	5.0	40	20.0	3.0	35.0	T048	108
2N692	16.0	65	800	150	5.0	60	20.0	3.0	35.0	T048	108
2N1913	50.0	83	200	1000	15.0	40	20.0	3.0	70.0	T094	204
2N1916	50.0	83	400	1000	15.0	40	20.0	3.0	70.0	T094	204
2N1806	50.0	83	600	1000	15.0	40	20.0	3.0	70.0	T094	204
2N1795	50.0	83	200	1000	15.0	40	20.0	3.0	70.0	T083	204
2N1798	50.0	83	400	1000	15.0	40	20.0	3.0	70.0	T083	204
2N1800	50.0	83	600	1000	15.0	40	20.0	3.0	70.0	T083	204
2N3093	50.0	83	800	1000		40	20.0	3.0	70.0	T094	280
2N3095	50.0	83	1000	1000		40	20.0	3.0	70.0	T094	280
2N3097	50.0	83	1200	1000		40	20.0	3.0	70.0	T094	280

1/ This parameter is identified at V_{FBXM} or V_{FBOM} in older specifications.

TABLE XVII. Optically coupled isolators.

Device type number	Diode: V_R max (V dc)	Diode: I_F max (mA dc)	Diode: V_F at I_F = 10 mA dc, Min (V dc)	Diode: V_F at I_F = 10 mA dc, Max (V dc)	Transistor: V_{CEO} (max) (V dc)	Transistor: V_{EBO} (max) (V dc)	Transistor: h_{FE} V_{CE} = 5 V, I_C = 10 mA dc	Coupled: $I_{C(op)}$ V_{CE} = 5 V dc, I_F = 1 mA dc (Min) (mA dc)	Coupled: $I_{C(op)}$ (Max) (mA dc)	Coupled: t_r (μs)	Coupled: t_f (μs)	Case outline	Specification MIL-S-19500/
4N47	2	40	0.8	1.5	40	7	100	0.5	---	20	20	T099	548
4N48	2	40	0.8	1.5	40	7	100	1.0	5.0	20	20	T099	548
4N49	2	40	0.8	1.5	40	7	100	2.0	10.0	25	25	T099	548

Source: https://assist.dla.mil -- Downloaded: 2016-12-11T03:47Z
Check the source to verify that this is the current version before use.

TABLE XVIII. NPN low-power transistors ($P_C \leq 5$ watts at $T_A = 25°C$) (general purpose and switching).

NPN device type number	f min/max (MHz)	P_T (mW)	Maximum ratings: I_C (mA)	$V_{(BR)CBO}$ (V dc)	$V_{(BR)CEO}$ (V dc)	$V_{(BR)EBO}$ (V dc)	Primary electrical characteristics: h_{FE} at I_C	(mA)	$V_{CE}(sat)$ at I_C (V dc)	(mA)	C_{obo} (pF)	t_{on} (ns)	t_{off} (ns)	Case outline	Specification MIL-S-19500/	PNP complement 1/
2N3439	15/	800	1000	450	350	7.0	40/160	20.0	0.5	50	10.0	1000	1000	T05	368	2N5416
2N3440	15/	800	1000	300	250	7.0	40/160	20.0	0.5	50	10.0	1000	1000	T05	368	2N5415
2N5237	15/75	1500	10000	150	120	7.0	40/120	5000.0	0.6	5000	350.0		2000	T05	394	
2N4150	15/75	1500	10000	100	70	7.0	40/120	5000.0	0.6	5000	350.0		2000	T05	394	
2N5666	20/70	1200	5000	250	200	6.0	40/120	1000.0	0.4	3000	90.0	250	1500	T05	455	
2N5667	20/70	1200	5000	400	300	6.0	25/75	1000.0	0.4	3000	90.0	250	2000	T05	455	
2N3421	40/160	1000	3000	125	80	8.0	40/120	1000.0	0.25	1000	150.0	300	1200	T05	393	
2N2484	60/210	360	50	60	60	6.0	200/500	0.01	0.3	1	5.0			T018	376	
2N3507	60/240	1000	3000	80	50	5.0	30/150	1500.0	1.0	1500	40.0	45	90	T05	349	2N3868
2N3019	100/400	800	1000	140	80	7.0	100/300	150.0	0.2	150	12.0	**	**	T05	391	2N4033
2N3501	150/800	1000	300	150	150	6.0	100/300	150.0	0.4	150	8.0	115	1150	T05	366	
2N2219A	250/	800	800	75	50	6.0	100/300	150	1.0	500	8.0	35	300	T05	251	2N2905A
2N2222A 2/	250/	500	800	75	50	6.0	100/300	150	1.0	500	8.0	35	300	T018	255	2N2907A
2N5582	250/500	500	800	75	50	6.0	100/300	150.0	1.0	50	8.0	35	300	T046	423	
2N3735	250/600	1000	1500	75	50	5.0	40/140	500.0	0.5	500	9.0		90	T05	395	2N3763
2N3737	250/600	500	1500	75	50	5.0	40/140	500.0	0.5	500	9.0		90	T046	395	2N3765
2N3013	350/1200	360	300	40	20	5.0	35/120	30.0	0.18	30	5.0	15	25	T052	287	
2N2369A	500/	360		40	15	4.5	40/120	10.0	0.2	10	4.0	12	18	T018	317	
2N4449	500/	300		40	15	4.5	40/120	10.0	0.2	10	4.0	12	18	T046	317	
2N918 3/	600/	200	50	30	15	3.0	20/200	3.0	0.4	10	1.7			T072	301	
2N3960	1300/2600	400		20	12	4.5	60/300	10.0	0.3	30	2.5			T018	399	
2N3700	100/400	500	1000	140	80	7.0	50/200	500.0	0.2	150	12.0			T018	391	
2N5154	70/	1000	2000	100	80	5.5	70/200	2500.0	1.5	5000	250.0	500	1500	T039	544	2N5153
2N5339		10000	2000	100	100	6.0	60/240	2000.0	0.7	2000	250.0	200	2200	T039	560	2N6193

** $t_{on} + t_{off} = 30$ ns.

1/ PNP complementary device types are listed in table XIX. Some of these may not be exact complements, but are very similarly characterized.
2/ Quad version of 2N2222A is 2N6989 in a DIP on MIL-S-19500/559 and is approved for use.
3/ This type also listed in table XXII.

Source: https://assist.dla.mil -- Downloaded: 2016-12-11T03:47Z
Check the source to verify that this is the current version before use.

TABLE XIX. PNP low-power transistors ($P_C \leq 5$ watts at $T_A = 25°C$) (general purpose and switching).

PNP device type number	f min/max (MHz)	P_T (mW)	Maximum ratings I_C (mA)	$V_{(BR)CBO}$ (V dc)	$V_{(BR)CEO}$ (V dc)	$V_{(BR)EBO}$ (V dc)	Primary electrical characteristics h_{FE} at I_C	(mA)	$V_{CE}(sat)$ at I_C (V dc)	(mA)	C_{obo} (pF)	t_{on} (ns)	t_{off} (ns)	Case outline	Specification MIL-S-19500/	NPN complement 1/
2N5416	15/75	750	1000	350	300	6.0	30/120	50.0	2.0	50	15.0	1000.0	140.0	T05	485	2N3439
2N2605	30/240	400	30	70	60	6.0	100/300	0.01	0.5	10	6.0			T046	354	
2N3743	40/160	1000	50	300	300	5.0	50/200	30.0	1.2	30	15.0			T039	397	2N3742
2N3868	60/240	1000	3000	60	60	4.0	30/150	1500.0	0.75	1500	120.0	100.0	400.0	T05	350	2N3507
2N4033	150/600	800	1000	80	80	5.0	100/300	100.0	0.15	150	10.0	25.0	35.0	T039	512	2N3019
2N3762	150/600	1000	1500	40	40	5.0	30/120	1000.0	0.5	500	15.0			T039	396	
2N3764	150/600	500	1500	40	40	5.0	30/120	1000.0	0.5	500	15.0			T046	396	
2N3467	175/500	1000	1000	40	40	5.0	40/120	500.0	0.6	500	25.0	40.0	90.0	T05	348	
2N2905A	200/	600	600	60	60	5.0	100/300	150.0	1.6	500	8.0	45.0	200.0	T05	290	2N2219A
2N2907A 2/	200/	400	600	60	60	5.0	100/300	150.0	1.6	500	8.0	45.0	200.0	T018	291	2N2222A
2N3637	200/850	1000	1000	175	175	5.0	100/300	50.0	0.9	50	10.0	400.0	600.0	T05	357	
2N3486A	200/1000	400	600	60	60	5.0	100/300	150.0	1.6	500	8.0	45.0	200.0	T046	392	
2N3251A	300/900	360	200	60	60	5.0	100/300	10.0	0.25	10	6.0	70.0	250.0	T018	323	
2N4957 3/	1200/3600	200	30	30	30	3.0	30/150	5.0						T072	426	
2N4261	2000/	200	30	15	15	4.5	30/150	10.0	0.15	1	2.5	2.5	3.5	T072	511	2N3960
2N5153	70/	1000	2000	100	80	5.5	70/200	2500.0	1.5	5000	250.0	500.0	1500.0	T039	545	2N5154
2N6193	70/	10000	5000	100	100	6.0	60/240	2000.0	0.7	2000	300.0			T039	561	2N5339

1/ PNP complementary device types are listed in table XVIII. Some of these may not be exact complements, but are very similarly characterized and are intended for such applications.
2/ Quad version of 2N2907A is 2N6987 in a DIP on MIL-S-19500/558 and is approved for use.
3/ This type also listed in table XXII.

Source: https://assist.dla.mil -- Downloaded: 2016-12-11T03:47Z
Check the source to verify that this is the current version before use.

TABLE XX. NPN power transistors ($P_C \geq 5$ W) (listed in order of increasing power).

NPN device type number	P_T at T_C		Maximum ratings				Primary electrical characteristics							Case outline	Specification MIL-S-19500/	PNP complement 1/
			I_C	$V_{(BR)CBO}$	$V_{(BR)CEO}$	$V_{(BR)EBO}$	h_{FE} at I_C		$V_{CE}(sat)$ at I_C		f	t_{on}	t_{off}			
	(W)	(°C)	(A)	(V dc)	(V dc)	(V dc)		(A)	(max)	(A)	(MHz)	(μs)	(μs)			
2N3739	10	100	3.0	325	300	6	40-200	0.1	2.5	0.25	10-60			T066	402	
2N3767	25	25	4.0	100	80	6	40-160	0.5	1.0	0.5				T066	518	
2N5664	30	100	5.0	250	200	6	40-120	1.0	0.4	3.0	20-70	0.25	1.5	T066	455	
2N5665	30	100	5.0	400	300	6	25-75	1.0	0.4	3.0	20-70	0.25	2.0	T066	455	
2N3997	30	100	5.0	100	80	8	80-240	1.0	2.0	5.0	40	0.3	2.0	T0111 2/	374	
2N2151	30	100	2.0	150	100	8	40-120	1.0	0.1-1.0	1.0	10-70			T059	277	
2N2880	30	100	5.0	110	80	8	40-120	1.0	0.25	1.0	20-120	0.36	2.0	Stud	315	
2N3879	35	25	7.0	120	75	7	20-80	4.0	1.2	4.0		0.44	1.2	T066	526	
2N3585	35	25	2.0	500	300	6	25-100	1.0	0.75	1.0	15-75	3.0	7.0	T066	384	
2N2814	50	100	10.0	120	80	8	50-150	1.0	0.5	5.0	15-70	0.35	1.2	T061	415	
2N5004	58	25	10.0	100	80	5.5	70-200	2.5	1.5	5.0		0.5	1.4	T059 2/	534	2N5005
2N5157	100	75	3.5	700	500	6	30-90	1.0	0.8	1.0	2.5-12	0.8	1.7	T03	371	
2N3442	117	25	10.0	160	140	7	20-70	3.0	1.0	3.0	0.1			T03	370	
2N6033	140	25	40.0	150	120	7	10-50	40.0	1.0	40.0		0.5	2.0	T03	528	
2N5672	140	25	30.0	150	120	7	20-100	15.0	0.75	15.0	50-200	0.5	2.0	T03	488	
2N5038	140	25	20.0	150	90	7	50-200	2.0	1.0	12.0	60-200	0.5	2.0	T03	439	
2N5039	140	25	20.0	125	75	7	30-150	2.0	1.0	10.0	60-200	0.5	2.0	T03	439	
2N5241	150	25	10.0	400	400	6	15-35	2.5	0.7	2.5	2.5-7.5	0.8	1.7	T03	414	
2N3716	150	25	10.0	100	80	7	30-120	3.0	1.0	5.0	4-20	1.5	2.0	T03	408	2N3792
2N6546	175	25	15.0		300	9	12-60	5.0	1.5	10.0		1.0	4.7	T03	525	
2N6547	175	25	15.0		400	9	12-60	5.0	1.5	10.0		1.0	4.7	T03	525	
2N5302	200	25	30.0	60	60	5	15-60	15.0	0.75	10.0	2-20	1.0	3.0	T03	456	2N4399
2N5303	200	25	20.0	80	80	5	15-60	10.0	1.0	10.0	2-20	1.0	3.0	T03	456	2N5745
2N5685	300	25	50.0	60	60	5	15-60	25.0	1.0	25.0	2-20	1.5	3.0	T03	464	2N5683
2N5686	300	25	50.0	80	80	5	15-60	25.0	1.0	25.0	2-20	1.5	3.0	T03	464	2N5684
2N5250	350	25	50.0	125	100	10	15-50	40.0	1.0	40.0	20-70	2.0	2.0	T0114	380	
2N5251	350	25	50.0	180	150	10	15-50	40.0	1.35	40.0		2.0	0.5		380	

1/ PNP complementary device types are listed in table XXI. Some of these may not be exact complements, but are very similarly characterized and are intended for such applications.
2/ Collector is isolated from the case.

TABLE XXI. PNP power transistors ($P_C \geq 5$ W) (listed in order of increasing power).

PNP device type number	P_T at T_C 25°C	Maximum ratings				Primary electrical characteristics							Case outline	Specification MIL-S-19500/	NPN complement 1/
		I_C	$V_{(BR)CBO}$	$V_{(BR)CEO}$	$V_{(BR)EBO}$	h_{FE} at I_C		$V_{CE}(sat)$ at I_C		f	t_{on}	t_{off}			
	(W)	(A)	(V dc)	(V dc)	(V dc)		(A)	(max)	(A)	(MHz)	(μs)	(μs)			
2N3741	25.0	4	80	80	7	30-100	0.25	0.6	1	4-20	0.4	1.0	T066	441	
2N6211	35.0	2	275	225	6	30-175	1.0	1.4	1	5	0.6	3.0	T066	461	
2N6212	35.0	2	350	300	6	35-175	1.0	1.6	1	5	0.6	3.0	T066	461	
2N6213	35.0	2	400	350	6	30-175	1.0	2.0	1	20-100	0.6	3.1	T066 2/	461	
2N5005	58.0	10	100	80	5.5	70-200	2.5	1.5	5		0.5	1.5	T059	535	2N5004
2N3792	150.0	10	80	80	7	30-120	3.0	1.0	5	4-20	1.5	2.0	T03	379	2N3716
2N4399	200.0	30	60	60	5	15-60	15.0	0.75	15	4-40	0.4	2.1	T03	433	2N5302
2N5745	200.0	20	80	80	5	15-60	10.0	1.0	10	2-40	1.0	3.0	T03	433	2N5303
2N6437	200.0	25	120	100	6	25-100	10.0	1.0	10		0.5	1.25	T03	508	2N5686
2N5684	300.0	50	80	80	5	15-60	25.0	1.0	25				T03 2/	466	2N5686
2N5683	300.0	50	60	60	5	15-60	25.0	1.0	25		1.5	3.0	T03	466	2N5685

1/ NPN complementary device types are listed in table XX. Some of these may not be exact complements, but are very similarly characterized and are intended for such applications.
2/ Collector is isolated from the case.

Source: https://assist.dla.mil -- Downloaded: 2016-12-11T03:47Z
Check the source to verify that this is the current version before use.

TABLE XXII. RF transistors.

Device type number	P_T at T_C (W)	*T_A (°C)	P_{out} (W)	P_{in} (W)	f (MHz)	n (%)	Maximum ratings: I_C (A)	$V_{(BR)CBO}$	$V_{(BR)CEO}$ / $V_{(BR)CEX}$	$V_{(BR)EBO}$	Primary electrical characteristics: h_{FE} at I_C	(A)	f_t (MHz)	NF at f (dB)	(MHz)	Case outline	Specification MIL-S-19500/
2N918	0.3	25					0.05	30	15	3.0	20-200	0.003	600/	6.0	60	T072	301
2N2857	0.3	25					0.04	30	15	3.0	30-150	0.003	1000/1900	4.5	450	T072	343
2N3375	11.6	25	7.5-1.4	1.0	100	65	1.5	65	40	4.0	15-150	0.15	350/			T060	341
			3-6	1.0	400	40											
2N3553	1.0	*25	2.5-5	0.25	175	50	1.0	65	40	4.0	15-150	0.15	350/			T039	341
2N3866A	1.0	*25	1-2	0.15	400	45	0.4	60	30	3.5	25-200	0.05	800/1500			T039	398
			0.5	0.075	400	40											
2N5109	1.0	*25	+11.0 dB min pin = -10 dBm				0.4	40	20	3.0	40-120	0.05	1200/1800	3.0	200	T039	453
2N4957	0.2	*25	+17 dB min, 25 dB max				0.03	30	30	3.0	30-165	0.005	1200/3600	3.0	450	T072	426
2N6603	0.4	100	G_{pe} = 14-20 dB				0.03	25	15	3.0	30-200	0.015		2.5	1000	T0244	522
2N6604	0.5	75	G_{pe} = 14-20 dB				0.05	25	15	3.0	30-200	0.030		3.0	1000	T0244	522

NOTE: All are NPN except 2N4957.

Source: https://assistdla.mil -- Downloaded: 2016-12-21T03:47Z
Check the source to verify that this is the current version before use.

TABLE XXIII. Dual transistors (differential amplifier).

Device type number	Polarity	Maximum ratings at T_A = 25°C					Primary electrical characteristics					Case outline	Specification MIL-S-19500/
		P_T One side only (mW)	I_C (mA dc)	$V_{(BR)CBO}$ (V dc)	$V_{(BR)CEO}$ (V dc)	$V_{(BR)EBO}$ (V dc)	h_{FE} at I_C	(mA)	C_{obo} (max) (pF)	NF (dB)	f_t (MHz)		
2N2060	NPN	540	500	100	60	7	40-120	1.0	15	8.0	60-500	T077	270
2N2920	NPN	300	30	70	60	6	175-600	0.01	5	3.0	60-400	T077	355
2N3810	PNP	500	50	60	60	5	150-450	1.0	5	3.5	100-500	T077	336
2N3811	PNP	500	50	60	60	5	300-900	1.0	5	2.5	100-500	T077	336

Source: https://assist.dla.mil -- Downloaded: 2016-12-11T03:47Z
Check the source to verify that this is the current version before use.

TABLE XXIV. Dual transistors.

Device type number	Polarity	P_T at T_A 25°C	Maximum ratings				Primary electrical characteristics						Case outline	Specification MIL-S-19500/
		One side only (W)	I_C (mA)	$V_{(BR)CBO}$ (V dc)	$V_{(BR)CEO}$ (V dc)	$V_{(BR)EBO}$ (V dc)	h_{FE} at I_C	(mA)	$V_{CE(sat)}$ at I_C (V dc)	(mA)	f_t (MHz)	C_{obo} (pF)		
2N4854	NPN/PNP	0.30	600	60	5	40	100-300	150	0.4	150	200/800	8	T077	421
2N5794	NPN/NPN	0.50	600	75	40	6	120-300	150			200/1000	8		495
2N5796	PNP/PNP	0.50	600	60	60	5	100-300	150			200/1000	8		496

Source: https://assist.dla.mil -- Downloaded: 2016-12-11T03:47Z
Check the source to verify that this is the current version before use.

TABLE XXV. Darlington transistors.

Device type number	Polarity	P_T at T_C		Maximum ratings					Primary electrical characteristics							Case outline	Specification MIL-S-19500/	Complement
				I_C	V_{EB1}	V_{EB2}	V_{CBO1}	V_{CER}	h_{FE} at I_C		$V_{CE}(sat)$ at I_C		f	t_{on}	t_{off}			
		(W)	(°C)	(A dc)	(V dc)	(V dc)	(V dc)	(V dc)		(A dc)	(V dc)	(A dc)	(MHz)	(μs)	(μs)			
2N6350	NPN	5	100	5	12	6	80	80	2,000-10,000	5	1.5	5	50/250	0.5	1.2	TO33	472	
2N6351	NPN	5	100	5	12	6	150	150	1,000-10,000	5	2.5	5	50/250	0.5	1.2	TO33	472	
2N6352	NPN	25	100	5	12	6	80	80	2,000-10,000	5	1.5	5	50/250	0.5	1.2	TO66	472	
2N6353	NPN	25	100	5	12	6	150	150	1,000-10,000	5	2.5	5	50/250	0.5	1.2	TO66	472	
2N6649	PNP	85	25	10	5		60		1,000-20,000	5	2.0	5	50/400	2.5	10.0	TO3	527	2N6384
2N6650	PNP	85	25	10	5		80		1,000-20,000	5	2.0	5	50/400	2.5	10.0	TO3	527	2N6385
2N6384	NPN	100	25	10	5		60		1,000-20,000	5	2.0	5	20/300	2.5	10.0	TO3	523	2N6649
2N6385	NPN	100	25	10	5		80		1,000-20,000	5	2.0	5	20/300	2.5	10.0	TO3	523	2N6550
2N6051	PNP	150	25	12	5		80		1,000-10,000	6	3.0	12	20/125	1.0	6.0	TO3	501	2N6058
2N6052	PNP	150	25	12	5		100		1,000-10,000	6	3.0	12	20/125	1.0	6.0	TO3	501	2N6059
2N6058	NPN	150	25	12	5		80		2,500-18,000	6	3.0	12	20/125	1.0	6.0	TO3	502	2N6051
2N6059	NPN	150	25	12	5		100		2,500-18,000	6	3.0	12	20/125	1.0	6.0	TO3	502	2N6052
2N6283	NPN	175	25	20	7		80		1,250 18,000	10	3.0	20	8/80	1.5	7.5	TO3	504	2N6286
2N6284	NPN	175	25	20	7		100		1,250-18,000	10	3.0	20	8/80	1.5	7.5	TO3	504	2N6287
2N6286	PNP	175	25	20	7		80		1,250-18,000	10	3.0	20	8/80	1.5	5.5	TO3	505	2N6283
2N6287	PNP	175	25	20	7		100		1,250-18,000	10	3.0	20	8/80	1.5	5.5	TO3	505	2N6284
2N6299	PNP	32	100	8			80		750-18,000	4	2.0	4	25/350	2.0	8.0	TO66	540	2N6301
2N6301	NPN	32	100	8			80		750-18,000	4	2.0	4	25/350	2.0	8.0	TO66	539	2N6299

Source: https://assist.dla.mil -- Downloaded: 2016-12-11T03:47Z
Check the source to verify that this is the current version before use.

TABLE XXVI. Unijunction transistors.

Device type number	Maximum ratings at TA = 25°C		Primary electrical characteristics				Case out-line	Specification MIL-S-19500/
	P (mW)	I_e (mA) rms	R_{BBO} (ohms)		I_{B2}(mod) (mA)	V_{EB1}(sat)max (V dc)		
2N4948	360	50	4000-12000	0.55-0.82	12-	3.0	T018	388
2N6116	300						T018	493

Source: https://assist.dla.mil -- Downloaded: 2016-12-11T03:47Z
Check the source to verify that this is the current version before use.

TABLE XXVII. Junction field effect transistors.

Device type number	Channel	Maximum ratings			Primary electrical characteristics											Case outline	Specification MIL-S-19500/
		P_T at T_A = 25°C	V_{DG}, V_{DS}, V_{GS}	I_G	$\lvert y_{fs} \rvert$ (μmhos)	I_{GSS} (max)	$V_{GS(OFF)}$ (volts) 1/		$V_{DS(ON)}$	$r_{ds(on)}$	I_{DSS}	t_d	t_r	t_{off}	C_{iss}		
		(mW)	(V)	(mA)	min/max	(nA)	min	max	min/max	Ω	(mA) min/max	(ns)	(ns)	(ns)	(pF)		
2N3821	n	300	50	10	1500/4500			4							6	T072	375
2N3822	n	300	50	10	3800/6500			6							6	T072	375
2N3823	n	300	30	10	3500/6500	0.5		8	1/7.5		4/20				6	T072	375
2N4856	n	360	40	50		0.25	4.0	10	/.75	25	50/---	6	3	25	18	T018	385
2N4857	n	360	40	50		0.25	2.0	6	/.5	40	20/100	6	4	50	18	T018	385
2N4858	n	360	40	50		0.25	0.8	4	/.5	60	8/80	10	10	100	18	T018	385
2N5114	p	500	30	50		0.5	5.0	10	1.3	75	30/90		10	6	25	T018	476
2N5115	p	500	30	50		0.5	3.0	6	0.8	100	15/60		20	8	25	T018	476
2N5116	p	500	30	50		0.5	1.0	4	0.6	175	5/25		35	20	27	T018	476
2N5545	n 2/	250/400	50	30	1500/6000		0.5	4.5			5/8				6	T071	430
2N5546	n 2/	250/400	50	30	1500/6000		0.5	4.5			5/8				6	T071	430

1/ This parameter is identified as V_p in older specifications.
2/ Dual matched.

TABLE XXVIII. Low-power chopper transistors.

Device type number	Polarity	Maximum ratings				Primary electrical characteristics										Case outline	Specification MIL-S-19500/
		P_T T_A = 25°C	I_C	*V_{CBO} V_{CEO}	*V_{EBO} V_{EC}	h_{FE} at I_C		f	$V_{CE(sat)}$	*I_C I_B	*C_{obo} C_{fbo}	t_d	t_r	t_s	t_f		
		(mW)	(mA dc)	(V dc)	(V dc)		(mA dc)	(MHz)	(V dc)	(mA dc)	(pF)	(ns)	(ns)	(ns)	(ns)		
2N2432A	NPN	300	100	*45 45	*15 18	80-400	1.	20	0.15	*10 0.5	*12 12					T018	313
2N2945A	PNP	400	100	*25 20	*25 20	70	1.	1			*10 6	50	100	350	100	T046	382
2N2946A	PNP	400	100	*40 35	*40 35	50	1.	1			*10 6	50	100	350	100	T046	382

Source: https://assist.dla.mil -- Downloaded: 2016-12-11T03:47Z
Check the source to verify that this is the current version before use.

TABLE XXIX. MOSFET, power.

Device type number	Channel	Maximum ratings					Primary electrical characteristics								Case outline	Specification MIL-S-19500/
		P_T at T_C: 25°C W	V_{DS} V	V_{GS} V	I_D T_C: 25°C A	I_{DM} A(pk)	$r_{DS(on)}$ at V_{GS} = 10 V Ω max	$t_{d(on)}$ ns	t_r ns	$t_{d(off)}$ ns	t_f ns	C_{iss} pF	g_{fs} Min	g_{fs} Max		
2N6782	N	15	100	±20	3.50	14.0	.6	15	25	25	20	60/200	1.0	3.0	T039	556
2N6784	N	15	200	±20	2.25	9.0	1.5	15	20	30	20	60/200	0.9	2.7	T039	556
2N6786	N	15	400	±20	1.25	5.5	3.6	15	20	35	30	60/200	0.7	2.1	T039	556
2N6788	N	20	100	±20	6.0	24	.30	40	70	40	70	200/600	1.5	4.5	T039	555
2N6790	N	20	200	±20	3.5	14	.80	40	50	50	50	200/600	1.5	4.5	T039	555
2N6792	N	20	400	±20	2.0	10	1.80	40	35	60	35	200/600	1.0	3.0	T039	555
2N6794	N	20	500	±20	1.5	6.5	3.00	40	30	60	30	200/600	1.0	3.0	T039	555
2N6796	N	25	100	±20	8.0	25	.18	30	75	40	45	350/900	3.0	4.0	T039	557
2N6798	N	25	200	±20	5.5	12.5	.4	30	50	50	40	350/900	2.5	7.5	T039	557
2N6800	N	25	400	±20	3.0	6.0	1.0	30	35	55	35	350/900	2.0	6.0	T039	557
2N6802	N	25	500	±20	2.5	5.0	1.5	30	30	50	30	350/900	1.5	4.5	T039	557
2N6756	N	75	100	±20	14.0	56	.18	30	75	40	45	350/800	4.0	12.0	T03	542
2N6758	N	75	200	±20	9.0	36	.4	30	50	50	40	350/800	3.0	9.0	T03	542
2N6760	N	75	400	±20	5.5	22	1.0	30	35	55	35	350/800	3.0	9.0	T03	542
2N6762	N	75	500	±20	4.5	18	1.5	30	30	55	30	350/800	2.5	7.5	T03	542
2N6764	N	150	100	±20	38.0	160	.055	35	100	125	100	1000/3000	9.0	7.0	T03	543
2N6766	N	150	200	±20	30.0	120	.085	35	100	125	100	1000/3000	9.0	27.0	T03	543
2N6768	N	150	400	±20	14.0	60	.30	35	65	150	75	1000/3000	8.0	24.0	T03	543
2N6770	N	150	500	±20	12.0	52	.40	35	50	150	70	1000/3000	8.0	24.0	T03	543
2N6804	P	75	100	±20	11.0	50.0	0.3	60	140	140	140	400/800	3.0	9.0	T03	562
2N6806	P	75	200	±20	6.5	28.0	0.8	50	100	100	80	400/800	2.0	6.0	T03	562
2N6845	P	20	100	±20	4.0	16.0	0.6	60	100	50	70	200/400	1.25	3.75	T039	563
2N6847	P	20	200	±20	2.5	10.0	1.5	50	70	40	50	200/400	1.0	3.0	T039	563
2N6849	P	25	100	±20	6.5	25.0	0.3	60	140	140	140	400/800	2.5	7.5	T039	564
2N6851	P	25	200	±20	4.0	20.0	0.8	50	100	80	80	400/800	2.2	6.6	T039	564
2N6895	P	8.33	100	±20	1.16	5.0	3.65	25	45	45	50	40/1500	0.2	0.8	T039	565
2N6896	P	60	100	±20	6.0	20.0	0.6	20	10	150	100	200/600	1.0	4.0	T03	565
2N6897	P	100	100	±20	12.0	30.0	0.3	60	175	275	175	400/1500	2.0	8.0	T03	565
2N6898	P	150	100	±20	25.0	60.0	0.2	50	250	400	250	400/3000	4.0	1.6	T03	565
2N6901	N	8.33	100	±10	1.69	5.0	1.4	25	45	45	80	50/200	0.5	2.0	T039	570
2N6903	N	8.33	200	±10	0.98	4.0	3.65	25	30	40	80	50/200	0.5	2.0	T039	570
2N6902	N	75	100	±10	12.0	30.0	0.2	50	150	130	150	200/750	0.5	12.0	T03	566
2N6904	N	75	200	±10	8.0	20.0	0.6	45	150	135	105	200/750	0.3	12.0	T039	566

Source: https://assist.dla.mil -- Downloaded: 2019-12-11T03:47:22
Check the source to verify that this is the current version before use.

TABLE XXX. Numerical listing of device types.

Device type number	Table	Device type number	Table	Device type number	Table
1N746A-1	X	1N989B-1	X	1N2980B	X
1N747A-1	X	1N990B-1	X	1N2982B	X
1N748A-1	X	1N991B-1	X	1N2984B	X
1N749A-1	X	1N992B-1	X	1N2985B	X
1N750A-1	X	1N1186	IV	1N2986B	X
1N751A-1	X	1N1188	IV	1N2988B	X
1N752A-1	X	1N1190	IV	1N2989B	X
1N753A-1	X	1N1202A	IV	1N2990B	X
1N754A-1	X	1N1204A	IV	1N2991B	X
1N755A-1	X	1N1206A	IV	1N2992B	X
1N756A-1	X	1N2804B	X	1N2993B	X
1N757A-1	X	1N2805B	X	1N2995B	X
1N758A-1	X	1N2806B	X	1N2997B	X
1N759A-1	X	1N2807B	X	1N2999B	X
1N821-1	IX	1N2808B	X	1N3000B	X
1N823-1	IX	1N2809B	X	1N3001B	X
1N825-1	IX	1N2810B	X	1N3002B	X
1N827-1	IX	1N2811B	X	1N3003B	X
1N829-1	IX	1N2813B	X	1N3004B	X
1N935B-1	IX	1N2814B	X	1N3005B	X
1N937B-1	IX	1N2816B	X	1N3007B	X
1N938B-1	IX	1N2818B	X	1N3008B	X
1N939B-1	IX	1N2819B	X	1N3009B	X
1N940B-1	IX	1N2820B	X	1N3011B	X
1N941B-1	IX	1N2822B	X	1N3012B	X
1N943B-1	IX	1N2823B	X	1N3014B	X
1N944B-1	IX	1N2824B	X	1N3015B	X
1N945B-1	IX	1N2825B	X	1N3154-1	IX
1N962B-1	X	1N2826B	X	1N3155-1	IX
1N963B-1	X	1N2827B	X	1N3156-1	IX
1N964B-1	X	1N2829B	X	1N3157-1	IX
1N965B-1	X	1N2831B	X	1N3644	VI
1N966B-1	X	1N2832B	X	1N3645	VI
1N967B-1	X	1N2833B	X	1N3646	VI
1N968B-1	X	1N2834B	X	1N3647	VI
1N969B-1	X	1N2835B	X	1N3671A	IV
1N970B-1	X	1N2836B	X	1N3673A	IV
1N971B-1	X	1N2837B	X	1N3766	IV
1N972B-1	X	1N2838B	X	1N3768	IV
1N973B-1	X	1N2840B	X	1N3891	III
1N974B-1	X	1N2841B	X	1N3893	III
1N975B-1	X	1N2842B	X	1N3911	III
1N976B-1	X	1N2843B	X	1N3913	III
1N977B-1	X	1N2844B	X	1N3993A	X
1N978B-1	X	1N2845B	X	1N3994A	X
1N979B-1	X	1N2846B	X	1N3995A	X
1N980B-1	X	1N2970B	X	1N3996A	X
1N981B-1	X	1N2971B	X	1N3997A	X
1N982B-1	X	1N2972B	X	1N3998A	X
1N983B-1	X	1N2973B	X	1N3999A	X
1N984B-1	X	1N2974B	X	1N4000A	X
1N985B-1	X	1N2975B	X	1N4099-1	X
1N986B-1	X	1N2976B	X	1N4100-1	X
1N987B-1	X	1N2977B	X	1N4101-1	X
1N988B-1	X	1N2979B	X	1N4102-1	X
				1N4102-1	X

Source: https://assist.dla.mil -- Downloaded: 2016-12-11T03:47Z
Check the source to verify that this is the current version before use.

TABLE XXX. Numerical listing of device types - Continued.

Device type number	Table	Device type number	Table	Device type number	Table
1N4103-1	X	1N4476	X	1N4958	X
1N4104-1	X	1N4477	X	1N4959	X
1N4105-1	X	1N4478	X	1N4960	X
1N4106-1	X	1N4479	X	1N4961	X
1N4107-1	X	1N4480	X	1N4962	X
1N4108-1	X	1N4481	X	1N4963	X
1N4109-1	X	1N4482	X	1N4964	X
1N4110-1	X	1N4483	X	1N4965	X
1N4111-1	X	1N4484	X	1N4966	X
1N4112-1	X	1N4485	X	1N4967	X
1N4113-1	X	1N4486	X	1N4968	X
1N4114-1	X	1N4487	X	1N4969	X
1N4115-1	X	1N4488	X	1N4970	X
1N4116-1	X	1N4489	X	1N4971	X
1N4117-1	X	1N4490	X	1N4972	X
1N4118-1	X	1N4491	X	1N4973	X
1N4119-1	X	1N4492	X	1N4974	X
1N4120-1	X	1N4493	X	1N4975	X
1N4121-1	X	1N4494	X	1N4976	X
1N4122-1	X	1N4495	X	1N4977	X
1N4123-1	X	1N4496	X	1N4978	X
1N4124-1	X	1N4557B	X	1N4979	X
1N4125-1	X	1N4558B	X	1N4980	X
1N4126-1	X	1N4559B	X	1N4981	X
1N4127-1	X	1N4560B	X	1N4982	X
1N4128-1	X	1N4561B	X	1N4983	X
1N4129-1	X	1N4562B	X	1N4984	X
1N4130-1	X	1N4565A-1	IX	1N4985	X
1N4131-1	X	1N4566A-1	IX	1N4986	X
1N4132-1	X	1N4567A-1	IX	1N4987	X
1N4133-1	X	1N4568A-1	IX	1N4988	X
1N4134-1	X	1N4569A-1	IX	1N4989	X
1N4135-1	X	1N4570A-1	IX	1N4990	X
1N4148-1	I	1N4571A-1	IX	1N4991	X
1N4150-1	I	1N4572A-1	IX	1N4992	X
1N4153-1	I	1N4573A-1	IX	1N4993A	X
1N4370A-1	X	1N4574A-1	IX	1N4994A	X
1N4371A-1	X	1N4614-1	X	1N4995	X
1N4372A-1	X	1N4615-1	X	1N4996	X
1N4454-1	I	1N4616-1	X	1N5139A	XI
1N4460	X	1N4617-1	X	1N5140A	XI
1N4461	X	1N4618-1	X	1N5141A	XI
1N4462	X	1N4619-1	X	1N5142A	XI
1N4463	X	1N4620-1	X	1N5143A	XI
1N4464	X	1N4621-1	X	1N5144A	XI
1N4465	X	1N4622-1	X	1N5145A	XI
1N4466	X	1N4623-1	X	1N5146A	XI
1N4467	X	1N4624-1	X	1N5147A	XI
1N4468	X	1N4625-1	X	1N5148A	XI
1N4469	X	1N4926-1	X	1N5283	XII
1N4470	X	1N4927-1	X	1N5284	XII
1N4471	X	1N4938-1	I	1N5285	XII
1N4472	X	1N4954	X	1N5286	XII
1N4473	X	1N4955	X	1N5287	XII
1N4474	X	1N4956	X	1N5288	XII
1N4475	X	1N4957	X		

Source: https://assist.dla.mil -- Downloaded: 2016-12-11T03:47Z
Check the source to verify that this is the current version before use.

TABLE XXX. Numerical listing of device types - Continued.

Device type number	Table	Device type number	Table	Device type number	Table
1N5289	XII	1N5618	II	1N6140A	XIII
1N5290	XII	1N5619	III	1N6141A	XIII
1N5291	XII	1N5620	II	1N6142A	XIII
1N5292	XII	1N5621	III	1N6143A	XIII
1N5293	XII	1N5622	II	1N6144A	XIII
1N5294	XII	1N5623	III	1N6145A	XIII
1N5295	XII	1N5711	I	1N6146A	XIII
1N5296	XII	1N5712	I	1N6147A	XIII
1N5297	XII	1N5719	I	1N6148A	XIII
1N5298	XII	1N5804	III	1N6149A	XIII
1N5299	XII	1N5806	III	1N6150A	XIII
1N5300	XII	1N5809	III	1N6151A	XIII
1N5301	XII	1N5811	III	1N6152A	XIII
1N5302	XII	1N5814	III	1N6153A	XIII
1N5303	XII	1N5816	III	1N6154A	XIII
1N5304	XII	1N6092	XIV	1N6155A	XIII
1N5305	XII	1N6093	XIV	1N6156A	XIII
1N5306	XII	1N6094	XIV	1N6157A	XIII
1N5307	XII	1N6101	VIII	1N6158A	XIII
1N5308	XII	1N6103A	XIII	1N6159A	XIII
1N5309	XII	1N6104A	XIII	1N6160A	XIII
1N5310	XII	1N6105A	XIII	1N6161A	XIII
1N5311	XII	1N6106A	XIII	1N6162A	XIII
1N5312	XII	1N6107A	XIII	1N6163A	XIII
1N5313	XII	1N6108A	XIII	1N6164A	XIII
1N5314	XII	1N6109A	XIII	1N6165A	XIII
1N5415	III	1N6110A	XIII	1N6166A	XIII
1N5416	III	1N6111A	XIII	1N6167A	XIII
1N5417	III	1N6112A	XIII	1N6168A	XII
1N5418	III	1N6113A	XIII	1N6169A	XIII
1N5419	III	1N6114A	XIII	1N6170A	XIII
1N5420	III	1N6115A	XIII	1N6171A	XIII
1N5461B	XI	1N6116A	XIII	1N6172A	XIII
1N5462B	XI	1N6117A	XIII	1N6173A	XIII
1N5463B	XI	1N6118A	XIII	1N6391	V
1N5464B	XI	1N6119A	XIII	1N6392	V
1N5465B	XI	1N6120A	XIII	1N6304	III
1N5466B	XI	1N6121A	XIII	1N6305	III
1N5467B	XI	1N6122A	XIII	1N6306	III
1N5468B	XI	1N6123A	XIII	1N6461	XIV
1N5469B	XI	1N6124A	XIII	1N6462	XIV
1N5470B	XI	1N6125A	XIII	1N6463	XIV
1N5471B	XI	1N6126A	XIII	1N6464	XIV
1N5472B	XI	1N6127A	XIII	1N6465	XIV
1N5473B	XI	1N6128A1	XIII	1N6466	XIV
1N5474B	XI	1N6129A1	XIII	1N6467	XIV
1N5475B	XI	1N6130A1	XIII	1N6468	XII
1N5476B	XI	1N6131A1	XIII	1N6485	X
1N5551	II	1N6132A1	XIII	1N6486	X
1N5552	II	1N6133A1	XIII	1N6487	X
1N5553	II	1N6134A1	XIII	1N6488	X
1N5554	II	1N6135A	XIII	1N6489	X
1N5615	III	1N6136A	XIII	1N6490	X
1N5616	II	1N6137A	XIII	1N6491	X
1N5617	III	1N6139A	XIII	1N6506	VIII

Source: https://assist.dla.mil -- Downloaded: 2016-12-11T03:47Z
Check the source to verify that this is the current version before use.

TABLE XXX. Numerical listing of device types - Continued.

Device type number	Table	Device type number	Table	Device type number	Table
1N6507	VIII	2N2605	XIX	2N4957	XXII,XIX
1N6508	VIII	2N2814	XX	2N5004	XX
1N6509	VIII	2N2857	XXII	2N5005	XXI
1N6511	VIII	2N2880	XX	2N5038	XX
1N6632	X	2N2905A	XIX	2N5039	XX
1N6633	X	2N2907A	XIX	2N5109	XXII
1N6634	X	2N2920	XXIII	2N5114	XXVII
1N6635	X	2N2945A	XXVIII	2N5115	XXVII
1N6637	X	2N2946A	XXVIII	2N5116	XXVII
1N6638	I	2N3013	XVIII	2N5153	XIX
1N6642	I	2N3019	XVIII	2N5154	XVIII
1N6643	I	2N3251A	XIX	2N5157	XX
M19500/469-01	VII	2N3375	XXII	2N5237	XVIII
M19500/469-02	VII	2N3421	XVIII	2N5241	XX
M19500/469-03,04,05	VII	2N3439	XVIII	2N5250	XX
M19500/483-01	VII	2N3440	XVIII	2N5251	XX
M19500/483-02	VII	2N3442	XX	2N5302	XX
M19500/483-03	VII	2N3467	XVIX	2N5303	XX
M19500/51902	XV	2N3486A	XVIX	2N5339	XVIII
M19500/52002	XV	2N3501	XVIII	2N5416	XIX
M19500/52102	XIV	2N3507	XVIII	2N5545	XVIII
SPA25	VII	2N3553	XXII	2N5546	XVIII
SPB25	VII	2N3585	XX	2N5582	XVIII
SPC25	VII	2N3637	XIX	2N5664	XX
SPD25	VII	2N3700	XVIII	2N5665	XX
2N685	XVI	2N3716	XX	2N5666	XVIII
2N688	XVI	2N3735	XVIII	2N5667	XVIII
2N690	XVI	2N3737	XVIII	2N5672	XX
2N692	XVI	2N3739	XX	2N5683	XXI
2N1774A	XVI	2N3741	XXI	2N5684	XXI
2N1777A	XVI	2N3743	XIX	2N5685	XX
2N1795	XVI	2N3762	XIX	2N5686	XX
2N1798	XVI	2N3764	XIX	2N5745	XXI
2N1800	XVI	2N3767	XX	2N5794	XXIV
2N1806	XVI	2N3792	XXI	2N5796	XXIV
2N1913	XVI	2N3810	XXIII	2N6033	XX
2N1916	XVI	2N3811	XXIII	2N6051	XXV
2N2323A	XVI	2N3821	XXVII	2N6052	XXV
2N2324A	XVI	2N3822	XXVII	2N6058	XXV
2N2326A	XVI	2N3823	XXVII	2N6059	XXV
2N2328A	XVI	2N3866A	XXII	2N6116	XXVI
2N2329	XVI	2N3868	XIX	2N6193	XIX
2N3027	XVI	2N3979	XX	2N6283	XXV
2N3028	XVI	2N3960	XVIII	2N6284	XXV
2N3029	XVI	2N3997	XX	2N6286	XXV
2N3093	XVI	2N4033	XIX	2N6287	XXV
2N3095	XVI	2N4150	XVIII	2N6299	XXV
2N3097	XVI	2N4261	XIX	2N6301	XXV
2N918	XVIII,XXII	2N4399	XXI	2N6350	XXV
2N2060	XXIII	2N4449	XVIII	2N6351	XXV
2N2151	XX	2N4854	XXIV	2N6352	XXV
2N2219A	XVIII	2N4856	XXVII	2N6353	XXV
2N2222A	XVIII	2N4857	XXVII	2N6384	XXV
2N2369A	XVIII	2N4858	XXVII	2N6385	XXV
2N2432A	XXVIII	2N4948	XXVI	2N6437	XXI
2N2484	XVIII				

Source: https://assist.dla.mil -- Downloaded: 2016-12-11T03:47Z
Check the source to verify that this is the current version before use.

TABLE XXX. Numerical listing of device types - Continued.

Device type number	Table	Device type number	Table	Device type number	Table
2N6546	XX	2N6784	XXIX	2N6851	XXIX
2N6547	XX	2N6786	XXIX	2N6895	XXIX
2N6603	XXII	2N6788	XXIX	2N6896	XXIX
2N6604	XXII	2N6790	XXIX	2N6897	XXIX
2N6649	XXV	2N6792	XXIX	2N6898	XXIX
2N6650	XXV	2N6794	XXIX	2N6901	XXIX
2N6756	XXIX	2N6796	XXIX	2N6902	XXIX
2N6758	XXIX	2N6798	XXIX	2N6903	XXIX
2N6760	XXIX	2N6800	XXIX	2N6904	XXIX
2N6762	XXIX	2N6802	XXIX	2N6987	XIX
2N6764	XXIX	2N6804	XXIX	2N6989	XIX
2N6766	XXIX	2N6806	XXIX	4N47	XVII
2N6768	XXIX	2N6845	XXIX	4N48	XVII
2N6770	XXIX	2N6847	XXIX	4N49	XVII
2N6782	XXIX	2N6849	XXIX		

TABLE XXXI. Numerical listing of thyristors.

Device type number	Table	Device type no.	Table
2N685	XVI	2N2323A	XVI
2N688	XVI	2N2324A	XVI
2N690	XVI	2N2326A	XVI
2N692	XVI	2N2328A	XVI
2N1774A	XVI	2N2329	XVI
2N1777A	XVI	2N3027	XVI
2N1795	XVI	2N3028	XVI
2N1798	XVI	2N3029	XVI
2N1800	XVI	2N3093	XVI
2N1806	XVI	2N3095	XVI
2N1913	XVI	2N3097	XVI
2N1916	XVI		

Source: https://assist.dla.mil -- Downloaded: 2016-12-11T03:47Z
Check the source to verify that this is the current version before use.

CONCLUDING MATERIAL

Custodians:
Army - ER
Navy - EC
Air Force - 17

Review activities:
Army - MI, SM, AT
Navy - SH
Air Force -11, 85
DLA - ES
NASA - NA

User activities:
Army - None
Navy - AS, CG, OS, MC
Air Force - 19

International Interest (see 6.3).

Preparing activity:
Navy - EC

Agent:
DLA - ES

(Project 5961-1157)

Source: https://assist.dla.mil -- Downloaded: 2016-12-11T03:47Z
Check the source to verify that this is the current version before use.