INCH-POUND

MIL-DTL-17J
10 February 2014
SUPERSEDING
MIL-DTL-17H
19 August 2005

DETAIL SPECIFICATION

CABLES, RADIO FREQUENCY, FLEXIBLE AND SEMIRIGID GENERAL SPECIFICATION FOR

This specification is approved for use by all Departments and Agencies of the Department of Defense.

1. SCOPE

1.1 Scope. This specification covers flexible and semirigid cables with solid and semisolid dielectric cores, with single, dual and twin inner conductors. Cables covered by this specification are primarily intended for use as transmission lines to conduct energy in a simple power transfer continuously or intermittently. In general, these cables are designed for low-loss, stable operation from the relatively low frequencies through the higher frequencies in the microwave and radar regions of the frequency spectrum. Cables may also be used as circuit elements, delay lines or impedance matching devices. These cables are supplied under a reliability assurance program as specified in section 3.

1.2 Classification. Cables are of the following types (see 6.2).

1.2.1 Cable types.

1.2.1.1 Flexible, coaxial single conductor. A flexible coaxial cable is constructed of a single inner conductor covered by a flexible low-loss, RF dielectric core material, which is then surrounded by a braided outer conductor(s), with the whole covered by a protective covering. In some cases this is covered by an extra braided armor for use in extremely abusive applications. Each element of the cable is designed to contribute to the requirements of the finished product.

1.2.1.2 Semirigid, coaxial single conductor. Semirigid coaxial cables are constructed of a single inner conductor covered by a flexible low-loss RF dielectric core material, which is then surrounded by a solid, continuous, metallic outer conductor.

Comments, suggestions, or questions on this document should be addressed to DLA Land and Maritime, Attn: VAI, P.O. Box 3990, Columbus, OH 43218-3990, or emailed to RFConnector@dla.mil. Since contact information can change, you may want to verify the currency of this address information using the ASSIST Online database at https://assist.dla.mil.

AMSC N/A FSC 6145

Source: https://assist.dla.mil -- Downloaded: 2016-11-03T17:46Z
Check the source to verify that this is the current version before use.

1.2.1.3 Two-conductor. Individual dielectric cores of two-conductor cables are to meet the requirements of solid or semisolid dielectric cores. One strand of one of the inner conductors are to be coded for identification and be visible without disturbing the stranding. That is, if all of the strands of the inner conductors are coated, then one strand is to be bare; or if all of the strands are bare, then one strand is to be coated.

a. Twin. Twin cables are to be constructed of individual inner conductors within individual dielectric cores within a common outer conductor, or may have individual inner conductors within a common outer core that may be filled-to-round.

b. Dual. A dual cable is to be constructed of individual coaxial cables enclosed within a common outer conductor.

1.2.1.4 Triaxial. Triaxial cables are constructed the same as regular coaxial cables except for an additional interlayer of dielectric material over the outer conductor, over which is laid an extra shield, with the whole covered by a protective covering.

1.3 Part or Identifying Number (PIN). The PIN consists of the letter “M” followed by the specification number, the associated slash sheet number and the sequentially assigned dash number or "RG" number.

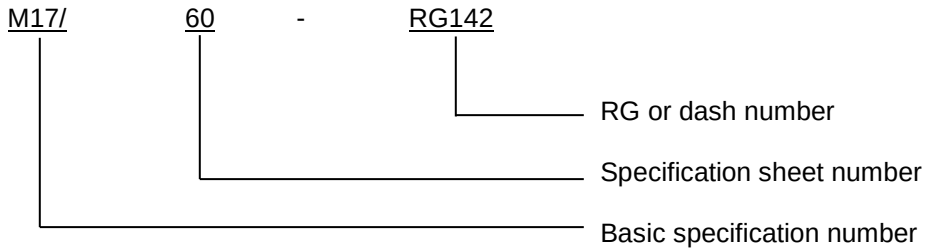

Example of existing RG number - M17/28-RG058
Example of new number - M17/156-00001

2. APPLICABLE DOCUMENTS

2.1 General. The documents listed in this section are specified in sections 3, 4 or 5 of this specification. This section does not include documents cited in other sections of this specification or recommended for additional information or as examples. While every effort has been made to ensure the completeness of this list, document users are cautioned that they must meet all specified requirements cited in sections 3, 4 or 5 of this specification, whether or not they are listed.

2.2 Government documents.

2.2.1 Specifications, standards, and handbooks. The following specifications, standards, and handbooks form a part of this document to the extent specified herein. Unless otherwise specified, the issues of these documents are those cited in the solicitation or contract.

FEDERAL STANDARDS

FED-STD-228 - Cable and Wire, Insulated; Methods of testing
FED-STD-601 - Rubber, Sampling and Testing

Source: https://assist.dla.mil -- Downloaded: 2016-11-03T17:46Z
Check the source to verify that this is the current version before use.

DEPARTMENT OF DEFENSE SPECIFICATIONS

MIL-I-631	- Insulation, Electrical, Synthetic Resin Composition, Non Rigid
MIL-Y-1140	- Yarn, Cord, Sleeving, Cloth and Tape-Glass
MIL-DTL-5624	- Turbine Fuel, Aviation, Grades JP-4 and JP-5
MIL-DTL-16884	- Fuel, Naval Distillate
MIL-PRF-17331	- Lubricating Oil, Steam Turbine and Gear, Moderate Service
MIL-PRF-17672	- Hydraulic Fluid, Petroleum, Inhibited
MIL-PRF-23699	- Lubricating Oil, Aircraft Turbine Engine, Synthetic Base. NATO Code Number 0-156
MIL-PRF-39012	- Connectors, Coaxial, Radio Frequency, General Specification for
MIL-PRF-87257	- Hydraulic Fluid, Fire Resistant; Low Temperature, Synthetic Hydrocarbon Base, Aircraft and Missile

(See supplement 1 for list of specification sheets.)

DEPARTMENT OF DEFENSE STANDARDS

MIL-STD-130	- Identification Marking of US Military Property
MIL-STD-202	- Electronic and Electrical Component Parts
MIL-STD-348	- Radio Frequency Connector Interfaces for MIL-C-3643, MIL-C-3650, MIL-C-3655, MIL-C-25516, MIL-C-26637, MIL-PRF-39012, MIL-PRF-49142, MIL-PRF-55339, MIL-C-83517

(Copies of these documents are available online at https://assist.daps.dla.mil/quicksearch/ or from the Standardization Documents Order Desk, 700 Robbins Avenue, Building 4D, Philadelphia, PA 19111-5094.)

2.2.2 Other Government documents, drawings and publications. The following other Government documents, drawings, and publications form a part of this document to the extent specified herein. Unless otherwise specified, the issues are those cited in the solicitation or contract.

NAVAL ENGINEERING STANDARDS (NES)

NES 711	- Determination of the Smoke Index of the Products of Combustion from Small Specimens of Materials
NES 713	- Determination of the Toxicity Index of the Products of Combustion from Small Specimens of Materials

(Copies of Naval Engineering Standards are sponsored by the Procurement Executive, Ministry of Defense, ship department, section TE112, block G, Foxhill, Bath 5AB England.)

2.3 Non-Government publications. The following documents form a part of this document to the extent specified herein. Unless otherwise specified, the issues of these documents are those issues of the documents cited in the solicitation or contract (see 6.2).

ASTM INTERNATIONAL

ASTM A411	- Zinc-Coated (Galvanized) Low-Carbon Steel, Armor Wire
ASTM B3	- Copper Wire, Soft or Annealed
ASTM B8	- Conductors, Copper, Concentric-Lay-Stranded, Hard, Medium-Hard, or Soft
ASTM B33	- Wire, Tinned Soft or Annealed Copper, For Electrical Purposes
ASTM B88	- Tube, Water, Seamless Copper

Source: https://assist.dla.mil -- Downloaded: 2016-11-03T17:46Z
Check the source to verify that this is the current version before use.

ASTM B197/B197M	- Wire, Alloy Copper-Beryllium
ASTM B211	- Aluminum and Aluminum-Alloy Bar, Rod, and Wire
ASTM B286	- Copper Conductors for Use in Hookup Wire for Electronic Equipment
ASTM B298	- Wire, Copper, Silver-Coated Soft or Annealed
ASTM B339	- Pig Tin
ASTM B344	- Alloys For Electrical Heating Elements, Nickel-Chromium and Nickel -Chromium-Iron, Drawn or Rolled
ASTM B447	- Tube, Copper, Welded
ASTM B452	- Wire, Steel, Copper-Clad, For Electronic Application
ASTM B483/B483M	- Standard Specification for Aluminum and Aluminum-Alloy Drawn Tube and Pipe for General Purpose Applications
ASTM B501	- Wire, Steel, For Electronic Application, Silver-Coated, Copper-Clad
ASTM B545	- Tin, Electrodeposited Coatings of
ASTM B566	- Wire, Aluminum, Copper-Clad
ASTM D470	- Wire and Cable, Crosslinked Insulations and Jackets For
ASTM D770	- Standard Specification for Isopropyl Alcohol
ASTM D1248	- Polyethylene Plastics Extrusion Materials For Wire and Cable
ASTM D1352	- Standard Specification for Ozone-Resisting Butyl Rubber Insulation For Wire and Cable
ASTM D2116	- Molding and Extrusion Materials, FEP Fluorocarbon
ASTM D2240	- Rubber Property-Durometer Hardness
ASTM D2565	- Standard Practice for Xenon-Arc Exposure of Plastics Intended for Outdoor Applications
ASTM D3159	- Materials, Molding and Extrusion, Modified ETFE-Fluoropolymer
ASTM D3275	- Materials, E-CTFE-Fluoroplastic Molding, Extrusion and Coating
ASTM D3307	- Perfluoroalkoxy (PFA) – Fluorocarbon Resin Molding and Extrusion Materials
ASTM D4245	- Standard Specification for Ozone-Resistant Thermoplastic Elastomer Insulation for Wire and Cable, 90 Degrees C Dry/75 Degrees C Wet Operation
ASTM D4894	- Standard Specification For Polytetrafluoroethylene (PTFE), Grandular Molding and Ram Extrusion Materials
ASTM D4895	- Polytetrafluoroethylene (PTFE), Resins Produced from Dispersion

(Copies of these documents are available online from http://www.astm.org or ASTM International, P.O. Box C700, 100 Barr Harbor Drive, West Conshohocken, PA 19428-2959.)

IEEE Operations Center

IEEE-287	- Standard for Precision Coax Connectors
IEEE-383	- Standard for Qualifying Class IE Electric Cables and Field Splices for Nuclear Power Generating Stations

(Copies of these documents are available online from http://www.ieee.org/about/ or from the IEEE Operations Center, 445 Hoes Lane, Piscataway, New Jersey 08854-1331.)

Source: https://assist.dla.mil -- Downloaded: 2016-11-03T17:46Z
Check the source to verify that this is the current version before use.

SAE INTERNATIONAL

SAE-AMS-WW-T-700 – Tube, Aluminum and Aluminum Alloy, Drawn, Seamless, General Specification For

(Copies of these documents are available from the SAE International, 400 Commonwealth Drive, Warrendale, PA 15096-0001, Tel: 877-606-7323 (inside USA and Canada) or 724-776-4970 (outside USA), http://www.sae.org.)

2.4 Order of precedence. In the event of a conflict between the text of this document and the references cited herein (except for related associated specifications sheets), the text of this document takes precedence. Nothing in this document, however, supersedes applicable laws and regulations unless a specific exemption has been obtained.

3. REQUIREMENTS

3.1 Specification sheets. The individual item requirements shall be as specified herein and In accordance with the applicable specification sheet. In the event of any conflict between the requirements of this specification and the specification sheet, the latter shall govern.

3.2 Classification of requirements. The classification of requirements for cable are as follows (see table I):

TABLE I. Classification of requirements.

Requirements	Paragraph
Qualification	3.3
Materials	3.4
Design and construction	3.5
Visual and mechanical	3.6
Operational	3.7
Marking	3.8
Weight	3.9
Workmanship	3.10

3.3 Qualification. Cable furnished under this specification shall be products that are authorized by the qualifying activity for listing on the applicable qualified products list before contract award (see 4.6 and 6.3).

3.3.1 Reliability. The contractor's reliability program for manufactured cable and procedures shall be in accordance with 4.2.

3.4 Materials. Unless otherwise specified (see 3.1), the materials for the principal components of the cable shall be as specified herein. Prior approval to use a substitute material must be obtained from the qualifying activity. When a definite material is not specified, a material shall be used that will enable the finished products to meet the performance requirements of this specification. Acceptance or approval of any constituent material shall not be construed as a guaranty of the acceptance of the finished product.

3.4.1 Recycled, recovered, or environmentally preferable materials. Recycled, recovered, or environmentally preferable materials should be used to the maximum extent possible, provided that the material meets or exceeds the operational and maintenance requirements, and promotes economically and advantageous life cycle costs.

Source: https://assist.dla.mil -- Downloaded: 2016-11-03T17:46Z
Check the source to verify that this is the current version before use.

3.5 Design and construction. Unless otherwise specified (see 3.1), cables shall be of the design and construction specified herein.

3.5.1 Inner conductors. The inner conductor shall be solid, stranded, braided or helical, bare or coated, as specified (see 3.1). The materials and coatings shall be as specified (see 3.1).

3.5.1.1 Solid inner conductors:

a. Bare copper wire. Bare copper wire, soft, or annealed copper wire, shall be in accordance with ASTM B3.

b. Tin-coated copper wire. Tin-coated, soft, or annealed copper wire, shall be in accordance with ASTM B33.

c. Silver-coated copper wire. Silver-coated copper wire shall be in accordance with ASTM B298, except the thickness of silver coating shall not be less than 40 microinches (0.0001 mm).

d. Copper-clad steel wire. Copper-clad steel wire shall be high-strength, 40% conductivity, hard-drawn, copper-clad, steel wire in accordance with ASTM B452, class 40HS.

e. Annealed copper-clad steel wire. Annealed copper-clad steel wire shall have the same requirements as for copper-clad steel wire specified in 3.5.1.1(d), except shall be annealed. The tensile strength shall be 50,000 lbf/in^2 minimum.

f. Silver-coated copper-clad steel wire. Silver-coated copper-clad steel wire shall be in accordance with ASTM B501, class 40 HS or 40A, except the thickness of silver coating shall not be less than 40 microinches (0.0001 mm).

g. Annealed copper-clad aluminum wire. Annealed copper-clad aluminum wire shall be in accordance with ASTM B566, class 10A or 15A. The thickness of the copper covering shall be 3.5% minimum of the wire radius (8% to 12% by volume) for class 10A, and 5% minimum of the wire radius (13% to 17% by volume) for class 15A.

h. Copper-beryllium alloy wire. Copper-beryllium alloy wire shall conform to solution-heat-treated, half-hard wire in accordance with ASTM B197/B197M, alloy 172. The tensile strength shall be 110,000 lbf/in^2 to 135,000 lbf/in^2.

i. Annealed-copper-beryllium wire. Copper-beryllium alloy wire shall conform to solution-heat-treated, half-hard wire in accordance with ASTM B197/B197M, alloy 172. The tensile strength shall be 80,000 lbf/in^2.

j. Silver-coated wire. Silver-coating over other wire material shall be in accordance with ASTM B298 with proper correction for the density of the base material when the gravimetric reference procedure is used.

k. High resistance wire. High resistance wire shall conform to ASTM B344 (80% nickel – 20% chromium). The tensile strength shall be 100,000 lbf/in^2 minimum. The resistance change with temperature shall also be in accordance with ASTM B344.

Source: https://assist.dla.mil -- Downloaded: 2016-11-03T17:46Z
Check the source to verify that this is the current version before use.

3.5.1.2 Stranded inner conductors. Stranded inner conductors shall be concentrically stranded in accordance with ASTM B8 or ASTM B286. Tensile strength and elongation of conductors shall be tested prior to stranding. Conductors shall not be coated after stranding (no over-coating). Individual wires, before stranding, shall meet all the requirements of the basic wires specified in 3.5.1.1. Diameter tolerances for the completed inner conductor shall be rounded to the next highest .001 inch (0.025 mm).

3.5.1.3 Conductor joints. Joints in individual strands of a stranded wire shall not be closer together than 5 lay-lengths.

3.5.2 Dielectric cores. The material used in the dielectric cores specified shall be of uniform thickness consistent with the electrical, environmental, physical, mechanical and dimensional requirements (see 3.1).

a. Solid dielectric cores. Solid dielectric cores shall be extruded or tape-wrapped and talc-coated when specified (see 3.1).

b. Semisolid (air-spaced) dielectric cores. Semisolid, air-spaced dielectric cores shall be constructed in such a manner that air spaces are a basic element of the construction.

3.5.2.1 Dielectric core types. The material for the dielectric cores shall be one of the following specified types (see 3.1). The dielectric constant and the dissipation factor shall be consistent with the applicable electrical requirements.

a. Type A. Polyethylene (PE) in accordance with ASTM D1248, Type I, Class A, Grade E-4 low-density type.

b. Type A-1. Solid polyethylene.

c. Type A-2. Solid polyethylene coated with the best commercial grade talc, to prevent sticking between individual components of the cable.

d. Type A-3. Air-spaced polyethylene. One polyethylene filament thread or a braid of more than one filament threads within a tube of solid polyethylene, or spiraled fins of polyethylene between tubes of solid polyethylene.

e. Type A-4. Air-spaced polyethylene, foamed polyethylene.

f. Type A-5. Conductive polyethylene shall be in accordance with ASTM D1248, Type I, Class C carbon-black type. The maximum resistance per foot shall be as specified (see 3.1).

g. Type D. Not for future design. Dielectric core shall be a composite of three layers of dielectric materials. Each layer shall make intimate contact with each other, except that the outer layer shall be easily strippable.

Inner layer: Type H, semiconducting synthetic rubber (see 3.5.2.1r).

Middle layer: Type W, insulating synthetic rubber (see 3.5.2.1x).

Outer layer: Type H, semiconducting synthetic rubber (see 3.5.2.1r).

Source: https://assist.dla.mil -- Downloaded: 2016-11-03T17:46Z
Check the source to verify that this is the current version before use.

h. Type E. Not for future design. Dielectric core shall be a composite of three layers of dielectric materials. Each layer shall make intimate contact with each other.

Inner layer: Type H, semiconducting synthetic rubber (see 3.5.2.1r).

Middle layer: Type W, insulating synthetic rubber (see 3.5.2.1x).

Outer layer: Type Q, insulated polychloroprene rubber, which need not be easily strippable (see 3.5.2.1w).

i. Type F. Polytetrafluoroethylene (PTFE) shall be in accordance with ASTM D4894 and ASTM D4895.

j. Type F-1. Solid, extruded PTFE.

k. Type F-2. Sold PTFE tape wrapped.

l. Type F-3. Air-spaced PTFE perforated tape wrapped.

m. Type F-4. Air-spaced PTFE, one PTFE filament thread or a braid of more than one PTFE filament thread within a tube of tape-wrapped PTFE.

n. Type F-5. Air-spaced PTFE, porous tape wrapped.

o. Type F-6. Air-spaced PTFE, expanded tape wrapped.

p. Type F-7. Solid PTFE, coated with a semiconducting material.

q. Type G. Not for future design. Solid mineral material (such as magnesium oxide) consisting of finely divided particles free from detrimental impurities which shall be packed tightly under high pressure.

r. Type H. Not for future design. Semiconducting synthetic rubber. The volume resistivity of this compound shall be within the range of 100 to 1,000 ohm-cm when tested in accordance with method 9111 in accordance with FED-STD-601, and colored black.

s. Type J. Insulating synthetic butyl rubber. Butyl rubber, a copolymer of isobutylene and isoprene, shall be in accordance with ASTM D1352, colored gray.

t. Type M. Fluorinated ethylene propylene (FEP) shall be in accordance with ASTM D2116.

u. Type M-1. Solid, extruded FEP.

v. Type M-2. Air-spaced FEP. Foamed FEP.

w. Type Q. Not for future design. Insulating polychloroprene rubber, and colored red.

x. Type W. Not for future design. Insulating synthetic rubber. The material shall have a tensile strength of 500 lbf/in^2 minimum and an elongation of 300% minimum in 10 inches in accordance with ASTM D470.

Source: https://assist.dla.mil -- Downloaded: 2016-11-03T17:46Z
Check the source to verify that this is the current version before use.

3.5.3 Outer conductors or extra shields. Outer conductors or extra shields shall be braided or solid (tubular), as specified (see 3.1).

3.5.3.1 Braided outer conductors or shields. Braids shall be applied with the maximum tension possible so as to prevent loosening or creeping but not to cause broken ends. Braids shall have no gaps. Loose strand ends shall be trimmed to within .031 inch (0.79 mm) of the braid and shall lay parallel with the braid. There shall be no splices of the completed braid. The number of braids and the elements of their construction shall be as specified (see 3.1). The individual strands of the braid shall meet the applicable requirements of the basic wires specified in 3.5.1.1. Strands may also be made of galvanized steel wires (see 3.5.3.1.1). The percent coverage specified shall be determined In accordance with the formulas shown below (see 3.1).

$$\text{Percent coverage} = (2F - F^2) \times 100\%; \quad F = \frac{N\,P\,d}{\sin a}; \quad a = \tan^{-1}\left[\frac{2\pi\,(D + 2d)\,P}{C}\right]$$

Where: D = Maximum outside diameter of the dielectric core under the braid. In the case of double braid construction, the diameter (D) for determining the coverage of the outside braid shall be the outside diameter of the inner braid.

d = Diameter of an individual strand of the braid.

N = Number of ends (wire strands) per carrier.

C = Number of carriers (separated group of ends) around the diameter of the cable.

P = Minimum number of picks per inch (separation points between carriers) along the length of the cable.

a = Smaller angle between longitudinal axis of the cable and the braid wires.

F = Fill or space factor.

For two-conductor cables that are not filled-to-round and not twisted.

$$a = \tan^{-1}\left[\frac{2\pi\,(D_1 + 2d)\,P}{C} + \frac{4(D_2 - D_1)\,P}{C}\right]$$

Where: D_1 = Same as D above, except the minor diameter.
D_2 = Same as D above, except the major diameter.

3.5.3.1.1 Galvanized steel wire braids. When galvanized steel wire braids are specified (see 3.1) the individual strands shall be soft or annealed, low-carbon, steel wires in accordance with ASTM A411. The tensile strength of the individual strands shall be 50,000 lbf/in^2 minimum. Tin plate (hot-dipped) in accordance with ASTM B339, ASTM B545 may be used as an alternate to galvanize.

Source: https://assist.dla.mil -- Downloaded: 2016-11-03T17:46Z
Check the source to verify that this is the current version before use.

3.5.3.2 Solid (tubular) outer conductors. Solid outer conductors shall be constructed of metallic tubing, annealed before the final sink.

a. Copper-tubing outer conductors. Copper tubing shall be 99% minimum purity. Seamless copper tubing shall be in accordance with ASTM B88. Welded copper tubing in accordance with ASTM B447, fully finished tube with IFR (Internal Flash Removal). The welded copper tubing shall be cold worked and re-crystalized to a uniform grain size throughout the structure with no evidence of the original weld.

b. Aluminum-tubing outer conductors.
Aluminum tubing shall be 99% minimum purity. Seamless aluminum tubing in accordance with SAE-AMS-WW-T-700, non-seamless aluminum tubing in accordance with ASTM B483/B483M.

c. Solid outer conductor joints. Joints shall be within the specified dimensions and tensile strength limits specified for the basic solid outer conductor.

3.5.4 Barrier tapes. When specified the barrier tapes shall be applied tightly and ride smoothly over the outer conductor (see 3.1). The barrier tape material shall be of the following type:

Type FF-2. PTFE tape wrapped. The PTFE may be reclaimed material. Unless otherwise specified (see 3.1). the tapes shall overlap 50% minimum of the width of the tapes.

3.5.5 Interlayers. When specified the interlayer shall be applied tightly and ride smoothly over the outer conductor (see 3.1). The interlayer material shall be one of the following types:

a. Type A-1R. Polyethylene in accordance with ASTM D1248, Type I, Class B, Grade E-4, low-density type, and colored red.

b. Type C-1. Not for future design. Braid of cotton tapes of 30 denier/2 ply.

c. Type K. Polyethylene-terephthalate tape in accordance with MIL-I-631, type G, form T, subform T_f, class I, fungus-resistant type. Unless otherwise specified the tapes shall overlap 50% minimum of the width of the tapes (see 3.1).

d. Type L. Not for future design. Glass fiber tapes filled with, and uniformly coated with, silicone rubber on both sides and properly cured. Curing may be accomplished after applying the tapes to the conductor. The tapes shall be held from unwinding by being self-bonding, by using a silicone rubber adhesive or by means of a binder over the insulating tapes.

e. Type U-I. Not for future design. Urethane elastomer tape.

f. Type R-1. Not for future design. Rubber-filled tape.

Source: https://assist.dla.mil -- Downloaded: 2016-11-03T17:46Z
Check the source to verify that this is the current version before use.

3.5.6 Jackets. The jacket material shall be tough, flexible and non-hygroscopic. The jacket shall cover the cable tightly and evenly in a manner consistent with the physical, mechanical, environmental and dimensional requirements. Color shown is for outer surface of jacket. The jacket material shall be one of the following types unless otherwise specified (see 3.1):

a. Type IIa. Noncontaminating type of medium-low temperature, plasticized or compounded, polyvinylchloride or polyvinylchloride-acetate meeting the following physical property requirements and colored black:

Unaged:
Tensile strength: 1500 minimum psi.
Elongation: 100%, minimum.

After 95± .5 hours air oven aging at 100°C:
Tensile strength: 80%, minimum of original.
Elongation: 60% of original.

After oil immersion:
Tensile strength: 80%, minimum of original.
Elongation: 60%, minimum of original.

Brittleness temperature:
Unaged: -40°C, maximum.
Aged: -40°C, maximum.

b. Type IIIa. Not for future design. Polyethylene in accordance with ASTM D1248, type I, class C, weather-resistant type, and colored black.

c. Type IV. Polychloroprene rubber, medium-low-temperature type, meeting the following physical property requirements and colored black:

Unaged:
Tensile strength: 1800 minimum psi.
Elongation: 300%, minimum.
Set, maximum, inch: .375 (9.53 mm).
Tensile stress: 500 (200% elongation, minimum psi).

After 95 ± .5 hours oxygen bomb aging at 70°C:
Tensile strength: 75%, minimum of original (but not less than 1600 psi).
Elongation: 65% of original (but not less than 250 psi).

Ozone resistance (After air oven conditioning and 168 ± .5 hours in ozone).
At 50°C: No visible cracks.

Brittleness temperature:
Unaged: -40°C, maximum.
Aged: -40°C, maximum.

After oil immersion:
Tensile strength, 60%, minimum of original.
Elongation, 60%, minimum of original.

d. Type V. Fiberglass braids of the number specified (see 3.1). The braids shall be impregnated

Source: https://assist.dla.mil -- Downloaded: 2016-11-03T17:46Z
Check the source to verify that this is the current version before use.

with a silicone-base varnish, and oven-baked. The glass fibers shall be in accordance with MIL-Y-1140, class C, and colored brown.

e. Type VI. Not for future design. Silicone-rubber-polyester fiber construction. The inner element shall be a single braid of fiberglass impregnated with a silicone-base varnish, under an extruded or tape-wrapped layer of silicone rubber, and the whole thoroughly cured. As an alternate, the inner construction may be a wrap(s) of silicone rubber impregnated fiberglass tape, which shall be fused during processing. Over either construction there shall be a protective braid of polyester fiber impregnated with a high-temperature fluorocarbon lacquer, and colored orange.

f. Type VII. Polytetrafluoroethylene (PTFE) shall be in accordance with ASTM D4894 and ASTM D4895, and colored white.

g. Type VIIa. Extruded PTFE.

h. Type VIIb. PTFE tape wrapped. There shall be two wraps of unsintered tapes applied in opposite directions with an overlap of 50% minimum of the width of the tapes, and the whole fused during processing.

i. Type VIII. Not for future design. Polychloroprene rubber, low-temperature type, meeting the physical property requirements as follows and colored black:

Unaged:
Tensile strength: 1500 minimum psi.
Elongation: 300%, minimum.
Set, maximum, inch: .375 (9.53 mm).
Tensile stress: 500 (200% elongation, minimum psi).
Tear resistance: 20 lb/inch, minimum.

After 95± .5 hours oxygen bomb aging at 70°C:
Tensile strength: 75%, minimum of original.
Elongation: 75%, of original.

After 168 ± 1 hours air oven aging at 70°C
Tensile strength: 80%, minimum of original.
Elongation: 80%, minimum of original.

Ozone resistance (after air-oven conditioning and 168 ± .5 hours of ozone).
At 50°C: No visible cracks.

Brittleness temperature:
Unaged: -55°C, maximum.
Aged: -55°C, maximum.

Torsional stiffness ratio:
30, maximum.

After oil immersion:
Tensile strength: 60%, minimum of original.
Elongation: 60%, minimum of original.

Source: https://assist.dla.mil -- Downloaded: 2016-11-03T17:46Z
Check the source to verify that this is the current version before use.

j. Type IX. Extruded fluorinated ethylene propylene (FEP) transparent enough to permit the reading of marking tape through the jacket.

k. Type X. Extruded copolymer of ethylene and tetrafluoroethylene (ETFE) shall be in accordance with ASTM D3159.

l. Type XI. Extruded copolymer of ethylene and chlorotrifluoroethylene (E-CTFE) type III shall be in accordance with ASTM D3275.

m. Type XII. Low-temperature, heat and weather resistant polyurethane thermoplastic elastomer, meeting the following physical property requirements:

Unaged:
Tensile strength: 3500 minimum psi.
Elongation: 550%, minimum.
Set, maximum: .250 inch (6.35 mm).
Tensile stress: 550 (100% elongation, minimum psi).
Tensile stress: 1000 (300% elongation, minimum psi).
Tear resistance: 90 lb/inch, minimum.
Durometer: 82 "A" maximum points.

After 20 ± 1 hours air pressure aging at 127°C:
Tensile strength: 50%, minimum of original.
Elongation: 50% of original.

Ozone resistance (after air-oven conditioning and 168 ± .5 hours in ozone).
At 50°C: No visible cracks.

Brittleness temperature:
Unaged: -55°C, maximum.
Aged: -55°C, maximum.

Torsional stiffness ratio:
35, maximum.

Torsional modulus at -55°C:
20,000 maximum PSI.

Hydrolytic stability:
Tensile strength: 50% minimum of original.
Elongation: 70% minimum of original.
Durometer: 8 "A" maximum points change.

n. Type XIII. Perfluoroalkoxy (PFA) shall be in accordance with ASTM D3307, type 1 having a tensile strength of 3,000 lbf/in^2 and a minimum elongation of 275%.

o. Type XIV. Cross-linked polyolefin.

Source: https://assist.dla.mil -- Downloaded: 2016-11-03T17:46Z
Check the source to verify that this is the current version before use.

p. Type XV. Styrene block copolymer or equivalent thermoplastic elastomer (TPE) shall be in accordance with ASTM D4245.

3.5.7 Armor. Metal armoring shall be of a braid construction that is rugged, tough and flexible.

a. Braid. Individual braid wires No. Alclad 5056 aluminum-alloy shall be in accordance with ASTM B211. The diameter shall be .0126 ± .0005 inch (0.32 mm ± 0.013 mm) and the tensile strength shall be 52,000 lb_f/in^2 minimum, before application onto the cable. The percent coverage shall be 88% minimum. The formulas shown in 3.5.3.1 shall be used to determine the percent coverage of the braid construction.

b. Paint. Armor covered with an aluminum paint, paste form, and colored light green and produced prior to 8 January 1996 may be used only until existing stock is purged.

3.6 Visual and mechanical inspection. When cables are examined and tested as specified in 4.8.1, the visual and mechanical characteristics shall be as specified (see 3.1).

3.6.1 Diameter measurements. When cables are examined as specified in 4.8.1.1, the diameter measurements shall be as specified (see 3.1).

3.6.2 Out-of-roundness of jacket measurements (when specified, see 3.1). When cables are examined as specified in 4.8.1.2, the out-of-roundness of the jacket diameter dimensions shall be as specified (see 3.1). The dimensions shall be as specified in the detailed specification and out-of-roundness (the difference in diameter dimension in mutual perpendicular planes at any cross section) shall not exceed 50% of the difference between minimum and maximum diameters specified.

3.6.3 Eccentricity of inner conductor. Not applicable to cables that have the inner conductor formed over an inner conductor support. When cables are examined as specified in 4.8.1.3, the displacement of the inner conductor shall not exceed 10% of the core radius, unless otherwise specified (see 3.1).

3.6.4 Adhesion of conductors. When cables are tested as specified in 4.8.1.4, the adhesion or the inner conductor to the dielectric core and the adhesion of the dielectric core to the outer conductor shall be as specified (see 3.1).

3.7 Operational. Unless otherwise specified, the operational requirement shall be as specified herein (see 3.1).

3.7.1 Continuity. When cables are tested as specified in 4.8.2, each conductor and shield shall be continuous.

3.7.2 Spark test. Not applicable to semirigid cables or to cables with type V and type VI jackets. When cables are tested as specified in 4.8.3, there shall be no breakdown, flashover, or sparkover.

3.7.3 Voltage withstanding. When cables are tested as specified in 4.8.4, there shall be no breakdown, flashover, or sparkover.

3.7.4 Insulation resistance. When cables are tested as specified in 4.8.5, the insulation resistance per 1,000 feet shall be as specified (see 3.1).

3.7.5 Corona extinction voltage. When cable test specimens are tested as specified in 4.8.6 the corona extinction voltage shall be no less than that specified (see 3.1).

3.7.6 Characteristic impedance. When cables are tested as specified in 4.8.7, the maximum

Source: https://assist.dla.mil -- Downloaded: 2016-11-03T17:46Z
Check the source to verify that this is the current version before use.

characteristic impedance shall not exceed the higher value specified, and the minimum shall not be less than the lower value specified (see 3.1).

3.7.7 RF transmission loss (attenuation). When cables are tested as specified in 4.8.8, the RF transmission loss shall not exceed the values specified over the frequency range or at the frequencies specified (see 3.1).

3.7.8 Standing wave ratio (return loss). When cables are tested as specified in the standing wave ratio (return loss) shall be within the specified limits over the specified frequency range (see 3.1).

3.7.9 Capacitance. When cables are tested as specified in, the maximum capacitance shall be as specified (see 3.1).

3.7.10 Capacitance stability. When cables are tested as specified in 4.8.11, the capacitance during and after the test shall not have changed from its initial measurement more than the specified value (see 3.1).

3.7.11 Capacitance unbalance. For two-conductor cables only. When cables are tested as specified in 4.8.12, the capacitance unbalance shall not exceed the specified value (see 3.1).

3.7.12 Transmission unbalance. For two-conductor cables only. When cables are tested as specified in 4.8.13, the transmission unbalance shall not exceed the specified value (see 3.1).

3.7.13 Mechanically induced noise voltage. For low noise cables only. When cables are tested as specified in 4.8.14, the mechanically induced noise voltage shall not exceed the specified value (see 3.1).

3.7.14 Time delay. When cables are tested as specified in 4.8.15, the time delay shall be as specified (see 3.1).

3.7.15 Aging stability. Not applicable to semirigid or cables with type IX jackets. When cables are tested as specified in 4.8.16, there shall be no evidence of cracks, flaws, or other damage in the jacket material.

3.7.16 Stress-crack resistance. FEP jacket. Unless otherwise specified (see 3.1), cable shall be tested as specified in 4.8.17. There shall be no evidence of cracks, flaws or other damage in the jacket material.

3.7.17 Outer conductor integrity. Only semirigid cables. When cables are tested as specified in 4.8.18, there shall be no evidence of cracks, flaws, or other damage in the outer conductor material.

3.7.18 Cold bend. Not applicable to semirigid cables. When cables are tested as specified in 4.8.19, there shall be no evidence of cracks, flaws, or other damage in the jacket material of flexible cables or the dielectric core material of flexible cable.

3.7.19 Dimensional stability. Not applicable to time delay cable and cables with braided inner conductor. When cables are tested as specified in 4.8.20, the measurement at each end shall not exceed the specified value (see 3.1).

3.7.20 Contamination. PVC type IIa jacket cable only. When cables are tested as specified in 4.8.21, the delta Q shall not exceed 2.5.

3.7.21 Bendability. Semirigid cable only. When cables are tested as specified in 4.8.22, there shall

Source: https://assist.dla.mil -- Downloaded: 2016-11-03T17:46Z
Check the source to verify that this is the current version before use.

be no cracks, splits, fracturing, wrinkling, or other damage in the solid outer conductor material, after being formed around the mandrel diameter specified (see 3.1).

3.7.22 Flammability (when specified see 3.1). When cables are tested as specified in 4.8.23, the rate of travel of the flame shall not exceed 1 inch per minute and cable surface shall not flame for more than 1 minute after the gas flame is withdrawn. There shall be no flaming of the tissue as a result of incendiary drippings from the specimen.

3.7.23 Flame propagation (when specified see 3.1). Samples of completed cable, when tested in accordance with 4.8.25, shall be self-extinguishing and shall not burn to the top of the tray.

3.7.24 Acid gas generation. When cables are tested as specified in 4.8.26, the acid equivalent shall not exceed the percentage, by weight of the sample, as specified (see 3.1).

3.7.25 Halogen content. When cables are tested as specified in 4.8.27, the halogen content shall not be greater than specified (see 3.1).

3.7.26 Immersion tests. When cables are tested as specified in 4.8.28, the tensile strength and elongation shall be no less than that specified (see 3.1) and there shall be no evidence of cracks, flaws, or other damage to the jacket material.

3.7.27 Smoke index. When cables are tested as specified in, the smoke index shall not be greater than that specified (see 3.1).

3.7.28 Toxicity Index. When cables are tested as specified in 4.8.30 , the toxicity index shall not be greater than that specified (see 3.1).

3.7.29 Durometer hardness. When cables are tested as specified in 4.8.31, the hardness shall be as specified (see 3.1).

3.7.30 Weathering. When cables are tested as specified in 4.8.32, the tensile strength and elongation shall be no less than 75% of their un-weathered values (see 3.1). The surface shall exhibit no signs of cracking when examined using 3X magnification.

3.7.31 Abrasion resistance. When tested as specified in 4.8.33, failure shall be construed if electrical contact occurs between either abrading element and the specimen conductor (as evidenced by cessation of cylinder rotation) prior to completing the specified number of abrasive scrapes (see 3.1). Test must be conducted on no fewer than 5 specimens.

3.7.32 Tear strength. When tested as specified in 4.8.34, the percentage heat distortion shall be no greater than that specified (see 3.1). Test must be conducted on no fewer than 6 specimens.

3.7.33 Heat distortion. When tested as specified in 4.8.35, the percentage heat distortion shall be no greater than that specified (see 3.1).

3.7.34 Physicals (aged). When tested as specified in 4.8.36, the specimens' tensile strength and elongation shall not be less than that specified (see 3.1).

3.7.35 Tensile strength and elongation. When tested as specified in 4.8.37, the cable jacket shall have a tensile strength and elongation no less than that specified (see 3.1).

3.7.36 Inductance. When cables are tested as specified in the inductance value shall be as specified (see 3.1).

Source: https://assist.dla.mil -- Downloaded: 2016-11-03T17:46Z
Check the source to verify that this is the current version before use.

3.8 Marking. Cables shall be marked with the PIN, defense specification number, manufacturer's code symbol or name, (date code to be marked on the rest of the cable as a minimum) in accordance with the basic requirements of MIL-STD-130. The marking shall be done in such a manner as not to permanently indent, deform or otherwise damage the jacket or outer covering. The marking shall be visible and legible from the outside of the cable, except for armored cables. The marking shall be legible after the aging stability and stress crack resistance tests. The following details shall apply:

a. Armored cables. Armored cables shall be marked at Intervals not exceeding 6 inches by inserting a suitably printed tape under the armor or jacket providing the marking is legible after the cable construction is completed. When the armor is added to a cable that has been previously marked with its unarmored type designation, the marking tape shall be inserted between the armor and the jacket only. When cables are so double marked, the marking on or under the jacket shall be disregarded.

b. Unarmored cables.

(1) Types IIa, IIIa, IV, VI, VIII, XIV and XV jackets shall be surface marked at intervals not exceeding 2 feet. Cables with type V jackets shall be marked with tapes or surface marked in ink. Cables with type VI, X, and XI jackets may be optionally marked with tapes in lieu of ink.

(2) Types IX and XIII jackets shall be marked at intervals not exceeding 6 inches with marker tape, with a reversal of the marking tape permitted every 6 inches, or surface marking (surface marking shall not be reversed). For cables (types IX and XIII jackets) having a nominal outside diameter of .150 inch (3.81 mm) or less the method of marking shall be at the manufacturer's discretion, but with the qualifying activities approval and the marking as minimum must reflect the manufacturer's CAGE code. If additional marking is possible, the remainder of the required marking shall be applied.

(3) Cables, twin axial, which do not have a requirement for fill-to-round, may be marked with a tape under the jacket regardless of jacket type.

c. Semirigid cables and unarmored cables with type VII jackets need not be marked.

3.9 Weight. When cables are tested as specified in 4.8.24, the maximum weight of completed cable construction shall be as specified (see 3.1).

3.10 Workmanship. All cables shall be manufactured and processed in such a manner as to be uniform in quality and shall be free from any burrs, die marks, chatter marks, foreign material and other defects that will affect life, serviceability, or appearance. Workmanship shall be such as to enable the cable to meet the applicable requirements of this specification.

Source: https://assist.dla.mil -- Downloaded: 2016-11-03T17:46Z
Check the source to verify that this is the current version before use.

4. VERIFICATION

4.1 Classification of inspection. The inspection requirements specified herein are classified as follows:

a. Materials inspection (see 4.4).

b. Final inspection (see 4.5).

c. Qualification inspection (see 4.6).

d. Conformance inspection (see 4.7).

4.2 Reliability assurance program. A reliability assurance program shall be established and maintained. Process control records shall cover the implementation of devices such as control charts (e.g., X bar and R charts) or other means of indication of the degree of control achieved in the production process. Records shall also indicate the action taken when each out-of-control condition is observed, and the disposition of non-conforming products processed during the period of out-of-control operation. Records associated with non-conforming products shall be kept for a minimum of 3 years. Evidence of such compliance shall be verified by the qualifying activity of this specification as a prerequisite for qualification and continued qualification.

4.3 Inspection conditions. Unless otherwise specified herein, all test inspection conditions shall be performed in accordance with the test conditions specified in MIL-STD-202, as follows:

a. Temperature: 25ºC ± 10ºC.
b. Relative humidity: 60% ± 15%.
c. Atmospheric pressure: 725 mm ± 76 mm of mercury.

4.4 Materials inspection. Materials inspection shall consist of certification supported by verifying data that the materials listed in table II, used in fabricating the cables, are in accordance with the applicable referenced specifications or requirements prior to such fabrication.

Source: https://assist.dla.mil -- Downloaded: 2016-11-03T17:46Z
Check the source to verify that this is the current version before use.

TABLE II. Materials inspection.

Material	Requirement paragraph	Applicable documents
Ethylene tetrafluoroethylene (ETFE)		ASTM D3159
Ethylene chlorotrifluoroethylene (E-CTFE)	3.5.6k	ASTM D3275
Fiberglass		MIL-Y-1140
Fluorinated ethylene propylene (FEP)	3.5.6l	ASTM D2116
Paint, aluminum		----------
Polyethylene (PE)	3.5.6d	ASTM D1248
Polytetrafluoroethylene (PTFE)	3.5.2.1t 3.5.7b	ASTM D4894 and ASTM D4895
Polyolefin, cross-linked	3.5.2.1a	----------
Rubber, butyl, insulating synthetic		ASTM D1352
Rubber, insulating synthetic	3.5.6f	ASTM D470
Rubber, polychloroprene		----------
Rubber, synthetic, semiconductor		FED-STD-601
Tape, polyethylene-terephthalate	3.5.6o	MIL-I-631
Tubing, aluminum, seamless	3.5.2.1s	SAE-AMS-WW-T-700
Tubing, copper, seamless	3.5.2.1x	ASTM B88
Wire, aluminum-alloy (alclad 5056)		ASTM B211
Wire, aluminum, copper-clad	3.5.6a,c,e,i	ASTM B566
Wire, copper, bare	3.5.2.1r	ASTM B3
Wire, copper, beryllium (alloy 172)		ASTM B197/B197M
Wire, copper, silver-coated	3.5.5c	ASTM B298
Wire, copper, tin-coated		ASTM B33
Wire, high resistance	3.5.3.2b	ASTM B344
Wire, steel, copper-clad		ASTM B452
Wire, steel, copper-clad, silver-coated	3.5.3.2a	ASTM B501
Wire, steel, galvanized	3.5.7a	ASTM A411
Rubber, polyurethane	3.5.1.1g	----------
Stranded inner conductors	3.5.1.1a	ASTM B8
Copper conductors for use in hook-up wire for electronic equipment	3.5.1.1h 3.5.1.1c,j 3.5.1.1b 3.5.1.1k 3.5.1.1d 3.5.1.1f 3.5.3.1.1 3.5.6m 3.5.1.2 3.5.1.2	ASTM B286

Source: https://assist.dla.mil -- Downloaded: 2016-11-03T17:46Z
Check the source to verify that this is the current version before use.

TABLE III. Final inspection.

Inspection		Requirement paragraph	Method paragraph
Semirigid cable 1/	All other cable 2/		
Continuity	Continuity	3.7.1	4.8.2
	Spark test	3.7.2	4.8.3
Voltage withstanding	Voltage withstanding	3.7.3	4.8.4
	Insulation resistance	3.7.4	4.8.5
	Out-of-roundness of jacket measurements	3.6.2	4.8.1.2

1/ Sampling and inspection shall be in accordance with 4.7.1.4.1.1.
2/ Tests performed on each continuous length of cable.

4.5 Final inspection. Prior to the delivery of the cable, the tests in table III shall be performed, as applicable.

4.5.1 Failure.

a. Semirigid cable: One or more failures shall be cause for refusal of the lot.

b. All other cable: One or more failures shall be cause for refusal, except a spark test failure may be repaired or the cable length cut out.

4.6 Qualification inspection. Qualification inspection shall be performed at a laboratory acceptable to the Government (see 6.3) on sample units produced with equipment and procedures normally used in production. Group qualification shall be as specified in the appendix to this specification.

4.6.1 Sample. The sample of each cable type submitted for qualification inspection shall be of sufficient length to perform all the applicable tests in table IV.

4.6.2 Inspection routine. The samples shall be subjected to the inspections specified in table IV. The entire sample shall be subjected to the inspections of group I. The specimen length shall be cut from each sample as required, and subjected to inspections of group II.

4.6.3 Failure. One or more failures shall be cause for refusal to grant qualification approval.

Source: https://assist.dla.mil -- Downloaded: 2016-11-03T17:46Z
Check the source to verify that this is the current version before use.

TABLE IV. Qualification inspection.

Inspection	Number of specimens to be tested	Requirement paragraph	Test method paragraph
Group I			
In-process inspection	Entire sample		4.5
Continuity	Entire sample	3.7.1	4.8.2
Spark test	Entire sample	3.7.2	4.8.3
Voltage withstanding	Entire sample	3.7.3	4.8.4
Insulation resistance 1/	Entire sample	3.7.4	4.8.5
Visual and mechanical inspection	Entire sample	3.6	4.8.1
Physical dimensions	Entire sample	3.6	4.8.1
Marking	Entire sample	3.8	4.8.1
Workmanship	Entire sample	3.10	4.8.1
Group II			
Corona extinction voltage 2/	1	3.7.5	
Characteristic impedance	1	3.7.6	4.8.6
RF transmission loss (attenuation) 2/	2	3.7.7	4.8.7
Standing wave ratio (return loss) 2/	2	3.7.8	4.8.8
Capacitance 2/	1	3.7.9	4.8.9
Capacitance stability 2/	1	3.7.10	4.8.10
Capacitance unbalance 3/	1		4.8.11
Transmission unbalance 3/	1		4.8.12
Inductance 3/	1	3.7.11	4.8.13
Mechanically induced noise voltage 4/	1	3.7.12	4.8.38
Time delay 2/	2	3.7.36	4.8.14
Aging stability 5/	4	3.7.13	4.8.15
Stress-crack resistance 2/	4	3.7.14	4.8.16
Outer conductor integrity 6/	4	3.7.15	4.8.17
Cold bend 9/	3	3.7.16	4.8.18
Dimensional stability 7/	1	3.7.17	4.8.19
Contamination 8/	1	3.7.18	4.8.20
Bendability 6/	2	3.7.19	4.8.21
Flammability 2/	1	3.7.20	4.8.22
Flame propagation 10/	1	3.7.21	4.8.23
Acid gas generation 10/	1	3.7.22	4.8.25
Halogen content 10/	1	3.7.23	4.8.26
Immersion 10/	1	3.7.24	4.8.27
Smoke index 10/	1	3.7.25	4.8.28
Toxicity index 10/	1		
Durometer hardness 10/	1	3.7.26	4.8.29
Weathering 10/	1	3.7.27	4.8.30
Abrasion resistance 10/	5	3.7.28	4.8.31
Tear strength 10/	6	3.7.29	4.8.32
Heat distortion 10/	1	3.7.30	
Physicals (aged) 10/	1	3.7.31	4.8.33
Tensile strength and elongation 10/	1	3.7.32	4.8.34
Weight	1	3.7.33	4.8.35
		3.7.34	4.8.36
		3.7.35	4.8.37
		3.9	4.8.24

See footnotes on next page.

Source: https://assist.dla.mil -- Downloaded: 2016-11-03T17:46Z
Check the source to verify that this is the current version before use.

TABLE IV. Qualification inspection - Continued.

1/ Not applicable to solid types A and F dielectric cores.
2/ When specified.
3/ Applicable to two-conductor cables.
4/ Applicable to low noise cables.
5/ Not applicable to semirigid or cables with type IX jackets.
6/ Applicable to semirigid cables.
7/ Not applicable to time delay or braided inner conductor cables.
8/ Applicable to type IIa jackets.
9/ Not applicable to semirigid cables.
10/ Applicable to type XIV, polyolefin jacketed cables only.

4.6.4 Retention of qualification. To retain qualification, the contractor shall forward a report at 12-month intervals to the qualifying activity. The qualifying activity shall establish the initial reporting date. The report shall consist of:

a. A summary of the results of the tests performed for inspection of product for delivery (groups A and B), indicating as a minimum the number of lots that have passed and the numbers that have failed.

b. A summary of the results of tests performed for qualification verification inspection group C, including the number and mode of failures. The summary shall include results of all qualification verification inspection tests performed and completed during the 12-month period. If the summary of the test results indicates nonconformance with specification requirements, and corrective action acceptable to the qualifying activity has not been taken, action may be taken to remove the failing product from the qualified products list.

Failure to submit the report within 30 days after the end of each 12-month period may result in loss of qualification for the product. In addition to the periodic submission of inspection data, the contractor shall immediately notify the qualifying activity at any time during the 12-month period that the inspection data indicates failure of the qualified product to meet the requirements of this specification.

In the event that no production occurred during the reporting period, a report shall be submitted certifying that the company still has the capabilities and facilities necessary to produce the item. If during three consecutive reporting periods there has been no production, the manufacturer may be required, at the discretion of the qualifying activity, to submit representative cables of each type to testing in accordance with the qualification inspection requirements.

4.7 Conformance inspection.

4.7.1 Inspection of product for delivery. Inspection and final inspection in accordance with table III of product for delivery shall consist of groups A and B inspections.

4.7.1.1 Unit of product. A unit of product shall be 5,000 feet of cable of the same type designation. If a production run is less than 5,000 feet, then the quantity produced shall be one unit of product.

4.7.1.1.1 Inspection lot. The inspection lot shall consist of the number of units of product, offered for inspection at one time. All of the units of product in the inspection lot submitted shall have been produced during the same production period with the same materials and processes.

4.7.1.1.2 Sample unit. A sample unit shall be a unit of product selected at random from the inspection lot without regard to quality.

Source: https://assist.dla.mil -- Downloaded: 2016-11-03T17:46Z
Check the source to verify that this is the current version before use.

4.7.1.1.3 Sample unit size. Unless otherwise specified, the sample unit size shall consist of that number of sample units required by the inspection lot size, as determined by 4.7.1.4.1.1.

4.7.1.1.4 Specimen. A specimen shall be an individual length of cable cut from the sample unit.

4.7.1.2 Group A inspection. Group A inspection shall consist of the inspection specified in table V.

4.7.1.2.1 Sampling plan (Group A). Table V, tests shall be performed on a production lot basis. Samples shall be selected in accordance with 4.7.1.4.1.1. If one or more defects are found, the lot shall be screened for that particular defect(s) and defects removed. A new sample of product shall be selected in accordance with 4.7.1.4.1.1 and all group A tests for previously found defects shall again be performed. If any defects are found in the second sample, the lot shall be rejected and shall not be supplied to this specification.

4.7.1.2.1.1 Visual inspection (group A). Each cable shall be visually examined for completeness, workmanship and identification requirements.

TABLE V. Group. A inspection.

Inspection	Requirement paragraph	Test method paragraph
Visual and mechanical inspection	3.6	4.8.1
Physical dimensions	3.6	4.8.1
Marking	3.8	4.8.1
Workmanship	3.10	4.8.1
Characteristic impedance	3.7.6	4.8.7
RF transmission loss (attenuation)	3.7.7	4.8.8
Standing wave ratio (return loss) 1/	3.7.8	4.8.9
Adhesion of conductors	3.6.4	4.8.1.4
Eccentricity of inner conductor	3.6.3	4.8.1.3

1/ As applicable.

4.7.1.3 Group B inspection. Group B inspection shall consist of the inspections specified in table VI.

4.7.1.3.1 Sampling plan (Group B). The sampling plan shall be in accordance with table VIII. If one or more defects are found, the lot shall be screened for that particular defect(s) and defects removed. A new sample of product shall be selected in accordance with 4.7.1.4.1.1 and all group B tests for previously found defects shall again be performed. If any defects are found in the second sample, the lot shall be rejected and shall not be supplied to this specification.

Source: https://assist.dla.mil -- Downloaded: 2016-11-03T17:46Z
Check the source to verify that this is the current version before use.

TABLE VI. Group B inspection.

Inspection	Requirement paragraph	Test method paragraph
Corona extinction voltage 1/	3.7.5	
Capacitance	3.7.9	4.8.6
Capacitance unbalance 1/		4.8.10
Transmission unbalance 1/		4.8.12
Mechanically induced noise voltage	3.7.11	4.8.13
1/	3.7.12	4.8.14
Time delay 1/	3.7.13	4.8.15
Cold bend 2/	3.7.14	4.8.19
Weight	3.7.18	4.8.24
Tear strength	3.9	4.8.34
Inductance 1/	3.7.32	4.8.38
	3.7.36	

1/ As applicable.
2/ Not applicable to semirigid cables.

4.7.1.4 Group C inspection. Group C inspection shall consist of the inspections specified in table VII. Group C inspection shall be made on sample units selected from inspection lots which have passed the groups A and B inspections.

TABLE VII. Group C inspection.

Inspection	Requirement paragraph	Test method paragraph
Capacitance stability 1/	3.7.10	4.8.11
Aging stability 1/	3.7.15	4.8.16
Stress crack resistance 1/	3.7.16	4.8.17
Outer conductor integrity 1/	3.7.17	4.8.18
Dimensional stability 1/	3.7.19	4.8.20
Contamination 2/	3.7.20	4.8.21
Bendability 1/	3.7.21	4.8.22
Flammability 1/	3.7.22	4.8.23
Heat distortion 1/	3.7.33	4.8.35
Tensile strength and elongation 1/	3.7.35	4.8.37
Physicals (aged) 1/	3.7.34	4.8.36

1/ When specified.
2/ Applicable to type IIa jackets.

4.7.1.4.1 Sampling plan (Group C). Sample units shall be selected from those types covered by a single specification sheet in accordance with table VIII, 3 months after the date of notification of qualification, except when the total production in a 3-month period is less than two units of product (10,000 feet) inspection need not be made until either production is at least 2 units of product or a total of 6 months has elapsed since the inspection was performed in which case only one sample unit shall be tested.

4.7.1.4.1.1 Sampling plan for all group inspections. See table VIII.

Source: https://assist.dla.mil -- Downloaded: 2016-11-03T17:46Z
Check the source to verify that this is the current version before use.

TABLE VIII. Sampling plan for all group inspection.

Units of product from 3-month's production	Sample unit size
2	1
3 to 8 inclusive	2
9 to 30 inclusive	3
31 to 80 inclusive	4
81 to 130 inclusive	5
131 to 180 inclusive	6
181 to 240 inclusive	7
241 to 300 inclusive	8

4.7.1.4.2 Failures. If one or more specimens fail to pass group C inspection, the inspection lot shall be considered to have failed.

4.7.1.4.3 Disposition of specimens. Specimens that have been tested to group C inspection shall not be delivered on the contract or purchase order.

4.7.1.4.4 Noncompliance. If a sample fails to pass group C inspection the manufacturer shall notify the qualifying activity and the cognizant inspection activity of such failure and take corrective action on the materials or processes, or both, as warranted, and on all units of product which can be corrected and which are manufactured under essentially the same materials and processes, and which are considered subject to the same failure. Acceptance and shipment of the product shall be discontinued until corrective action acceptable to the qualifying activity has been taken. After the corrective action has been taken group C inspection shall be repeated on additional sample units (all tests and examinations, or the test which the original sample failed, at the option of the qualifying activity). Groups A and B inspections may be reinstituted; however, final acceptance and shipment shall be withheld until the group C inspection has shown that the corrective action was successful. In the event of failure after reinspection, information concerning the failure shall be furnished to the cognizant inspection activity and the qualifying activity.

4.8 Methods of inspection. Test parameters given in the following tests are not to be assumed as the cable operating conditions, temperatures or limits. Methods of inspection given in the specification shall be the only acceptable methods unless an alternate method has been agreed to by the qualifying activity prior to the performance of the test. The test methods described herein are the preferred methods and shall be the referee method in cases of dispute.

4.8.1 Visual and mechanical examination (see 3.6). The cable shall be examined to verify that the design, construction, physical characteristics and dimensions, marking, and workmanship are in accordance with the applicable requirements (see 3.6, 3.8, and 3.10).

4.8.1.1 Diameter measurements (see 3.6.1).

Source: https://assist.dla.mil -- Downloaded: 2016-11-03T17:46Z
Check the source to verify that this is the current version before use.

a. All components, except the dielectric core of semirigid cables. Measurements shall be made on a suitable length (12 inch minimum) of cable taken from the end of the sample unit. Inner components shall be made accessible by stripping and removing the outer components carefully so as not to nick, cut, cold-work, or otherwise, damage the component to be measured. Four points for measurement shall be located 3 to 4 inches apart along the specimen length. Measurements shall be made at each point in two mutually perpendicular planes, so that a total of eight measurements are performed on each specimen. Measurements shall be made with a micrometer caliper or any other instrument of equal accuracy.

b. Dielectric core of semirigid cables. The outer diameter of the dielectric core shall be determined by measuring the inner diameter of the solid outer conductor. Measurements shall be made on four specimens, each 0.5 inch (12.7 mm) approximately in length, taken from the end of the sample unit. The specimens shall be cut squarely and carefully deburred. Measurements shall be made by means of plug gauges, or an adjustable plug hole gauge and a micrometer, or any other instrument of equal accuracy.

4.8.1.2 Out-of-roundness of jacket measurements (see 3.6.2). When specified the out-of-roundness of the jacket shall be monitored on a continuous production basis, and the jacket diameter shall be as specified (see 3.1). The out-of-roundness measurements shall be permanently recorded with a device capable of producing continuous graphic records. Two recordings shall be made, as nearly simultaneously as possible, of the outside diameter 90° apart and a point in the manufacturing process where further dimensional change will not occur. The recordings shall be permanent and reproducible by a common commercial process. The technique used (including the detector, recorder and associated components) shall have a response capable of recording changes in the diameter with a sensitivity of 0.001 inch (0.03 mm) along the length of cable at whatever speed the cable is traveling. The strip chart response time shall be compatible with the remainder of the system. The pen traverse shall be large enough to distinguish changes of diameter of 0.001 inch (0.03 mm). The chart speed relative to the cable speed shall be such that the recording must be identifiable to within 2 feet of the point on the cable length measured. Each foot of cable shall be represented by no less than 0.06 inch (1.52 mm) of recording paper.

4.8.1.3 Eccentricity of inner conductor (see 3.6.3).

4.8.1.3.1 Procedure. Four specimens, each 1 inch (25.4 mm) approximately in length, shall be cut from the end of the sample unit. The outer components of the cable shall be removed down to the dielectric core. The ends of the specimen shall be cut squarely and carefully deburred. The eccentricity, in terms of displacement of length, shall be measured with a machinist's microscope, or a comparator, or any other instrument capable of yielding a resolution of at least .0001 inch (0.003 mm). At spacings approximately 45° apart around the periphery of the inner conductor, measurements shall be taken of the dielectric wall thickness. The thickest measurement (T_{max}) and the thinnest measurement (T_{min}) shall then be used to compute the displacement, using the following formula:

$$\% \text{ Eccentricity} = \frac{T_{max} - T_{min}}{\text{Measured diameter of core}} \times 100$$

The percent eccentricity of the inner conductor shall be within the specified requirements (see 3.1).

Source: https://assist.dla.mil -- Downloaded: 2016-11-03T17:46Z
Check the source to verify that this is the current version before use.

4.8.1.3.2 Alternate method. As an alternate method of measurement that is more applicable for determining the eccentricity of the inner conductor of a semirigid cable, lay the sample in a Vee-shaped trough to which a dial indicator has been rigidly fastened in such a manner as to preclude movement of the indicator with respect to the trough, and to allow a reading of the inner conductor position with respect to the outer surface of the cable. Four specimens each approximately 6.0 inches (152.4 mm) long shall be cut from the end of the sample unit. Prepare the specimen by exposing approximately .250 inch (6.35 mm) of the inner conductor at one end of each specimen. The dial indicator shall be capable of yielding a resolution of at least .0001 inch (0.003 mm). The specimen shall be slowly rotated in the trough and the difference in dial indicator readings shall be noted through a rotation of 360°. Care shall be taken to avoid bending the inner conductor during the rotation operation. The difference in the dial indicator reading Is the total indicator reading (TIR), from which the % eccentricity may be computed using the following formula:

$$\% \text{ Eccentricity} = \frac{\text{Difference in dial indicator readings}}{\text{Measured diameter of core}} \times 100$$

4.8.1.4 Adhesion of conductors (see 3.6.4).

4.8.1.4.1 Specimen.

a. Two specimens of each cable shall be cut from the end of the sample unit. Each specimen shall be prepared as shown on figures 1 and 2. Stripping shall be done carefully. For semirigid cables, no more than .250 inch (6.35 mm) of material shall be removed at one time.

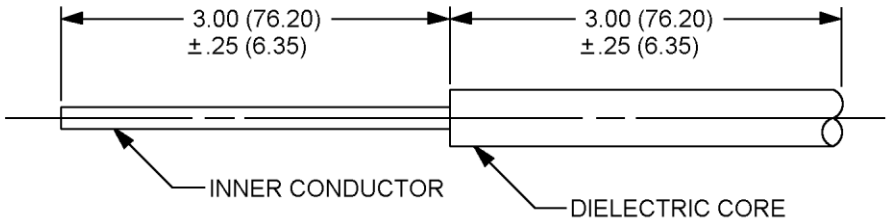

FIGURE 1. Stripping dimensions for flexible cables.

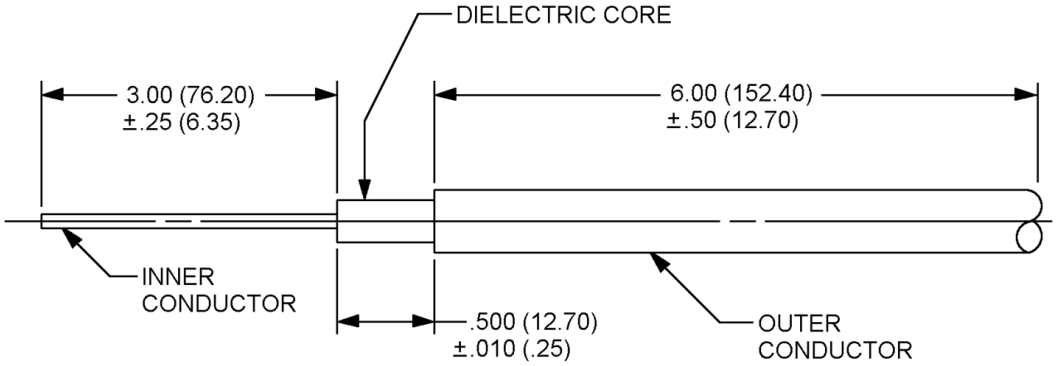

FIGURE 2. Stripping dimensions for semirigid cables.

Source: https://assist.dla.mil -- Downloaded: 2016-11-03T17:46Z
Check the source to verify that this is the current version before use.

b. The adhesion to conductors test shall be performed with a tensile tester and a test fixture such as shown on figures 3 and 4. The diameter of the hole in the test plate shall be .004 ± .001 inch (0.10 mm ± 0.03 mm) larger than the diameter of the applicable inner conductor or dielectric core. The inner conductor or dielectric core extending through the test plate hole shall be pulled with a constantly increasing force at a rate not to exceed 0.5 inch (12.7 mm) per minute. Avoid sudden pulls and jerking. Conductor adhesion shall be defined as the highest tensile tester reading obtained when the conductor-to-core bond is broken. In performing this test, physical handling of the specimen shall be kept to a minimum to avoid specimen degradation. The adhesion to conductor requirement, as noted by the reading on the tensile tester shall meet the specified value (see 3.1).

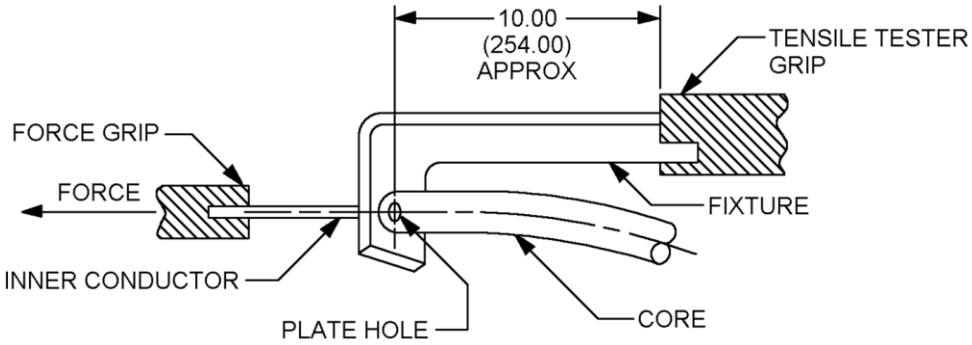

FIGURE 3. Typical test fixture for use with flexible cables.

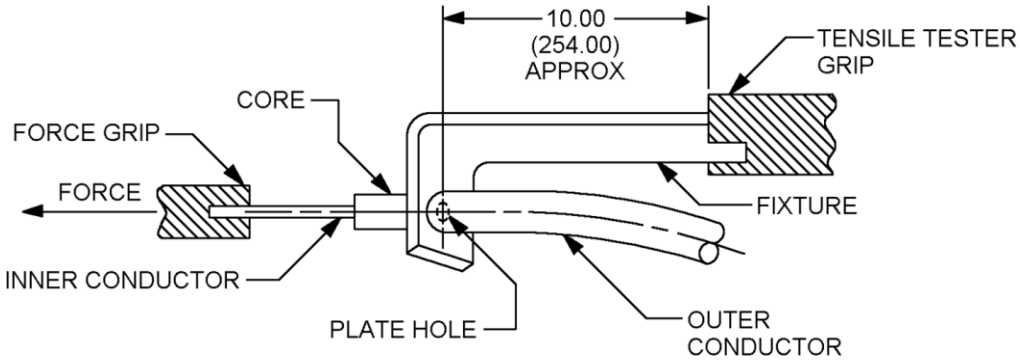

FIGURE 4. Typical test fixture for use with semi-rigid cables.

c. When semirigid cables are tested in accordance with the preceding procedure and the conductor-to-core bond is not broken at the specified maximum force (see 3.1), the test shall be repeated with additional specimens and the following modifications:

(1) The length of the outer conductor section (see figure 2), shall be 1.00 inch ± .12 inch (25.4 ± 3.05 mm), in lieu of 6.00 ± .50 inches (152.40 ± 12.70 mm).

(2) The force grip (see figure 4) shall be applied to the core in lieu of the inner conductor.

(3) Conductor adhesion shall not exceed the specified maximum value (see 3.1).

Source: https://assist.dla.mil -- Downloaded: 2016-11-03T17:46Z
Check the source to verify that this is the current version before use.

4.8.2 Continuity (see 3.7.1). To establish continuity, 25 volts dc maximum shall be applied to both ends of each conductor and shield of the cable through an appropriate indicator, such as an ohmmeter light, or buzzer. The test voltage may be applied to the conductors and shields individually or in series.

4.8.3 Spark test (see 3.7.2). The specimen shall be tested for jacket spark in accordance with method 6211 of FED-STD-228. A test voltage at a frequency between 48 and 62 Hz or 3.0 ± .5 kHz shall be applied between the outermost braid or shield and the outer surface of the jacket (see 3.1). Either the 60 Hz or the 3 kHz is acceptable. In the event of conflict, the 3 KHz test will be the governing test.

4.8.4 Voltage withstanding (see 3.7.3). The specimen shall be tested in accordance with method 6111 in accordance with FED-STD-228, except that the specimen shall not be immersed in water but tested dry. The specified test voltage (see 3.1) at a frequency of 60 Hz shall be applied to all samples for a minimum of 1 minute. The following details shall apply:

a. For coaxial cables. The test voltage shall be applied between the inner and the outer conductor, with the outer conductor grounded.

b. For triaxial cables. In addition to (a) above, 500 V dc shall be applied between the outer conductor and the extra shield with the extra shield grounded.

c. For two-conductor cables. The test voltage shall be applied between the two inner conductors, in addition, the test voltage shall be applied individually between each inner conductor and the outer conductor with the outer conductor grounded.

4.8.5 Insulation resistance (see 3.7.4). The specimen shall be measured with an apparatus suitable to verify compliance with the applicable detail specification requirement. The following details shall apply.

a. Unless otherwise specified (see 3.1), the measurement error, including the error of the test voltage source, the error of the indicating circuit, and the error in measurement of the mechanical specimen lengths, shall not exceed ± 15%.

b. The voltage shall be 200 volts dc minimum and the polarity shall be such that the outer conductor is at ground potential (see 3.1).

c. Measurements shall be made between the conductors specified (see 3.1).

d. Unless otherwise specified readings shall be taken immediately after an uninterrupted 2-minute electrification period (see 3.1). However, a stable, or an increasing reading indicating compliance with the specification requirement obtained before elapse of the 2-minute electrification period shall be acceptable.

Source: https://assist.dla.mil -- Downloaded: 2016-11-03T17:46Z
Check the source to verify that this is the current version before use.

e. The insulation resistance of the test specimen shall be calculated from the formula:

$$R = \frac{M \times L}{1000}$$

Where R = Insulation resistance for 1000 feet in megohms.

M = Indicator reading in megohms.

L = Test specimen length in feet, measured between outer conductor ends.

4.8.6 Corona extinction voltage (see 3.7.5). The cable test specimen shall be subjected to a gradually increasing sinusoidal voltage until a detector indicates a sustained corona discharge. The following details shall apply:

a. The sensitivity of the detection equipment shall permit observation of corona of five pico coulombs or less.

b. The cable specimen shall be from 2 to 5 feet in length. The ends of the cable shall be made corona free. A suggested method for making the ends corona free is as shown (see 6.7).

c. After the cable preparation, connect the cable test specimen to a voltage source. Both ends may be immersed in insulating oil to prevent corona discharge at the ends.

d. The test voltage shall be applied at room ambient conditions. The frequency of the test voltage shall be between 48 and 62 Hz.

e. Slowly increase the 48 to 62 Hz test voltage until the detector indicates a sustained corona discharge or reaches two times the specified corona extinction voltage.

f. If sustained corona discharge is indicated, the voltage shall then be decreased slowly until the corona extinction point is observed. The corona extinction voltage is defined as the voltage at which sustained discharge ceases. If sustained corona has not been observed at two times the specified corona extinction level the requirement is considered to have been satisfied.

g. When specified (see 3.1), the corona extinction voltage test shall be performed at the specified altitude equivalent reduced pressure.

4.8.7 Characteristic impedance (see 3.7.6).

4.8.7.1 Specimen. The specimen shall be 10 feet minimum or 2 dB maximum at 3 GHz whichever is the shorter.

Source: https://assist.dla.mil -- Downloaded: 2016-11-03T17:46Z
Check the source to verify that this is the current version before use.

4.8.7.2 Procedure. The specimen shall be prepared for testing by assembling appropriate connections to the cable ends. The equipment shall include a Time Domain Reflectometer (TDR). The rise time of the TDR shall be 150 picoseconds or less, and the vertical sensitivity of the system shall provide for a minimum resolution of one major scale division. A precision air-line of the same nominal characteristic impedance as the specimen shall be connected between the TDR and the connector-cable assembly. The characteristic impedance of the specimen shall then be measured compared to the precision air-line. The connector-cable assembly shall then be turned end-to-end and the measurement repeated. For cables of other then 50 and 75 ohms characteristic impedance, where precision air-lines, loads, or proper impedance measuring equipment are not available, the characteristic impedance may be determined by calculation from the capacitance measurement determined and the velocity of propagation measurement determined, using the following formula:

$$Z_o = \frac{101{,}670}{\text{Velocity of propagation (\%) X Capacitance (pF/ft)}}$$

4.8.8 RF transmission loss (attenuation) (see 3.7.7). The RF transmission loss (attenuation) shall be determined in accordance with the following procedures or an alternate method acceptable to the Government. In the event of dispute the method outlined herein shall be used (see figure 5).

4.8.8.1 Specimen. The cable specimen for swept frequency testing shall be of sufficient length to exhibit no less than 1 dB loss at the low end of the frequency range. The maximum length shall be such that the specimen exhibits a loss at the highest swept frequency no greater than the dynamic range of the calibrated measurement system less 10 dB. If the measured loss of a specimen at the highest frequency exceeds that value, an additional specimen of shorter length shall be used. The specimen for fixed frequency testing shall be long enough to exhibit a loss no less than 3 dB and no greater than the dynamic range of the measurement system less 10 dB. Both ends of the specimen shall be terminated by suitable connectors having interfaces in accordance with MIL-STD-348.

4.8.8.2 Procedure. When required a swept frequency RF transmission loss technique shall be used to determine the attenuation within the specified frequency range (see 3.1). Figure 5 shows a block diagram of typical equipment to be used for the measurements. Steps 1 through 3 apply to the coaxial cable. The test setup shall include a display of RF transmission loss in dB as a function of frequency. For qualification testing recordings of the display are required for each step. A curve representing the specification limit shall be shown in the step 3 chart to permit a direct comparison with the transmission loss of the test specimen. The zero dB reference level is established with matching pads 1 and 2 connected directly to each other in step 1. System amplitude accuracy is verified in step 2 by measuring the RF transmission loss of calibrated attenuators over the specified frequency range (see 3.1). The calibrated attenuators shall have nominal values covering the anticipated measurement loss values. Their calibration data shall be accurate within the following limits:

Nominal value, dB	Uncertainty, dB
Up to 10	±.1
Over 10 to 20	±.2
Over 20 to 30	±.3
Over 30 to 40	±.4
Over 40 to 50	±.5

System amplitude accuracy shall be 5% or better over the specified frequency range (see 3.1). When tests at fixed frequencies are specified, a tunable or fixed frequency source may be substituted for the swept RF source and the X-Y display may be omitted. For tests on specimens having a characteristic

Source: https://assist.dla.mil -- Downloaded: 2016-11-03T17:46Z
Check the source to verify that this is the current version before use.

impedance widely different from that of the measurement system, suitable impedance matching devices may be used in combination with the pads. The pads may consist of suitable lengths of cable similar to that being tested. For tests on twin conductor (balanced) cables, appropriate baluns (balanced-to-unbalanced transformers) are added to the system as shown in steps 4 and 5. Attenuation at any frequency is expressed by the following formula:

$$\text{Attenuation, dB/100 feet} = \frac{\text{Measured loss, dB} \times 100}{\text{Specimen length, feet}}$$

4.8.9 Standing wave ratio, SWR (return loss) (see 3.7.8). The standing wave ratio (return loss) shall be measured in accordance with one of the following procedures or another method acceptable to the Government. In the event of dispute the slotted line method outlined herein shall be used for frequencies above 2 GHz; for frequencies up to 2 GHz either the slotted line or the RF bridge may be used.

4.8.9.1 Swept frequency slotted line system. Diagrams for the swept frequency slotted line system check out and measurement procedures are shown on figure 6. In the basic measurement setup of figure 6, detector 1 provides a feedback signal to the swept RF source in order to normalize the output signal of detector 2. The frequency-amplitude characteristics of detectors 1 and 2 should be matched within 0.5 dB. The slotted line shall have a precision hermaphroditic output connector and its residual VSWR shall be less than 1.006 + .003 F (F in GHz). To measure standing wave ratio (return loss) several sweeps are made with the slotted line probe incrementally positioned over at least a half wave length at the lowest frequency of interest. In this manner an X-Y display is generated whose upper and lower envelope limits represent maximum and minimum amplitudes of the standing wave for each frequency in the test band. A base line may be generated by making a sweep with no input to the measurement channel amplifier. The resultant X-Y display is calibrated according to the characteristics of the measurement channel detector and amplifier. e.g., linear, square law, logarithmic, etc. The standing wave ratio test system is checked out by successively terminating the slotted line with the elements shown in steps 1 and 2 and sweeping the frequency over the specified test band (see 3.1). In step 1 the system standing wave ratio shall be less than 1.02 + .004 F (F measured in GHz). In step 2 the system SWR shall be as specified (see 3.1). For qualification the measurement is made as in step 3 or 4. The minimum cable length shall be as specified (see 3.1). Group A tests may be performed as in step 5.

4.8.9.2 Swept radio frequency bridge system. Diagrams for the swept RF bridge system check out and measurement procedures are shown on figure 7. The 0 dB reference for bridge directivity (up to 2 GHz) is the average of the precision open and short signals of step 1. Effective directivity of the system determined by steps 3 and 6 shall be 10 dB greater than the specified cable return loss (see 3.1). The 0 dB reference for steps 8 or 9 is a short at the standard test connector interface. The minimum cable length for step 8 shall be as specified (see 3.1). Step 8 is to be used for qualification. Step 9 may be used for group A testing. The standard precision adapter interface shall conform to IEEE-287. Standard precision adapters shall not exceed the specified VSWR requirements (see 3.1). Standard test adapter designs shall be approved by the military qualifying agency.

Source: https://assist.dla.mil -- Downloaded: 2016-11-03T17:46Z
Check the source to verify that this is the current version before use.

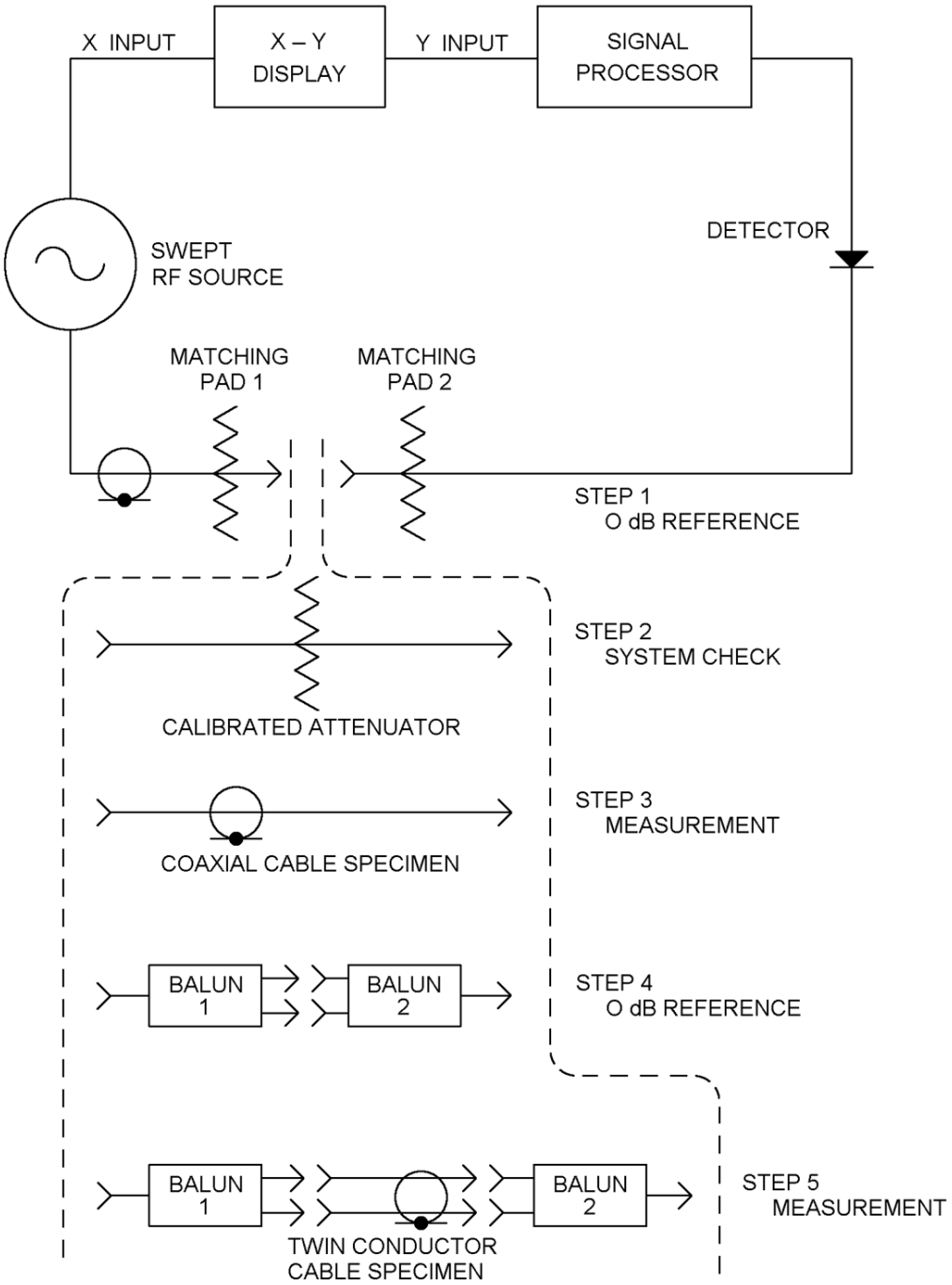

FIGURE 5. RF transmission loss (attenuation).

Source: https://assist.dla.mil -- Downloaded: 2016-11-03T17:46Z
Check the source to verify that this is the current version before use.

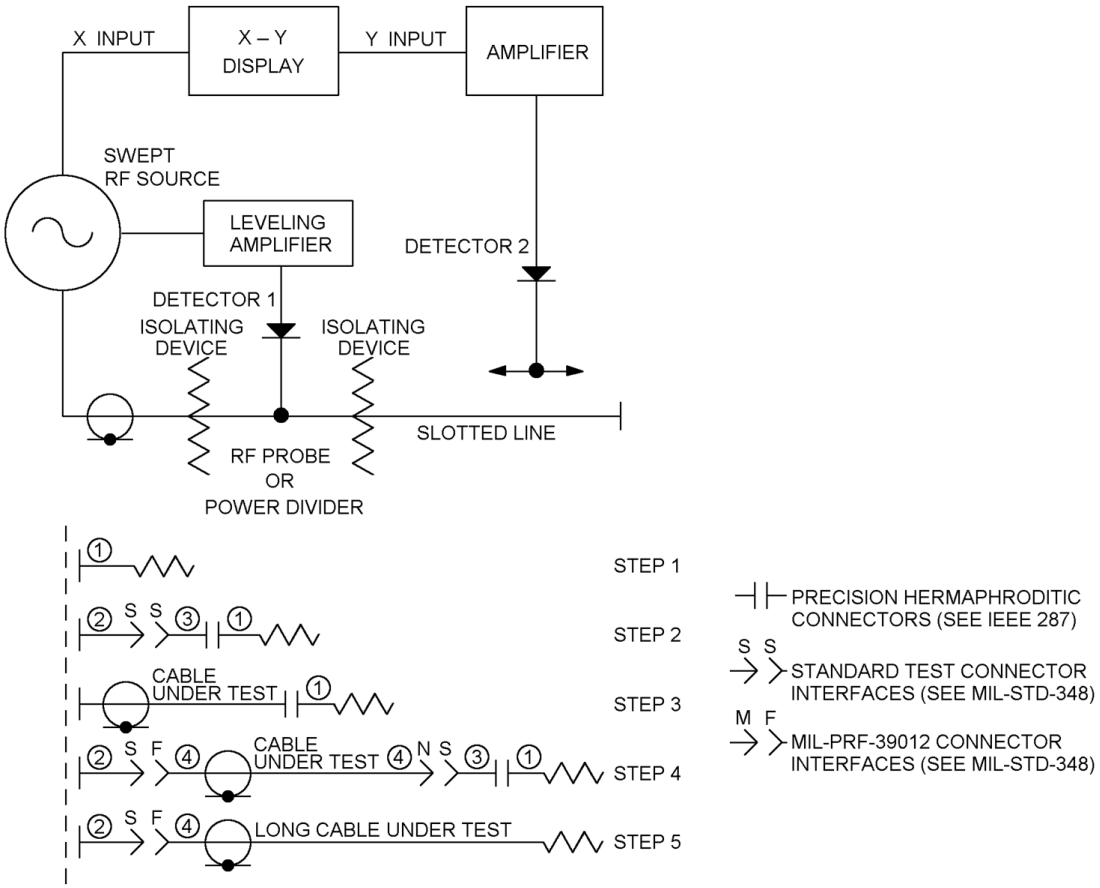

NOTES:
1. Precision termination.
2. Standard precision adapter, maximum VSWR as specified, (see MIL-PRF-39012).
3. Standard precision adapter, maximum VSWR as specified, (see MIL-PRF-39012).
4. Selected MIL-PRF-39012 connectors.

FIGURE 6. Swept frequency slotted line method for standing wave ratio (return loss) test.

Source: https://assist.dla.mil -- Downloaded: 2016-11-03T17:46Z
Check the source to verify that this is the current version before use.

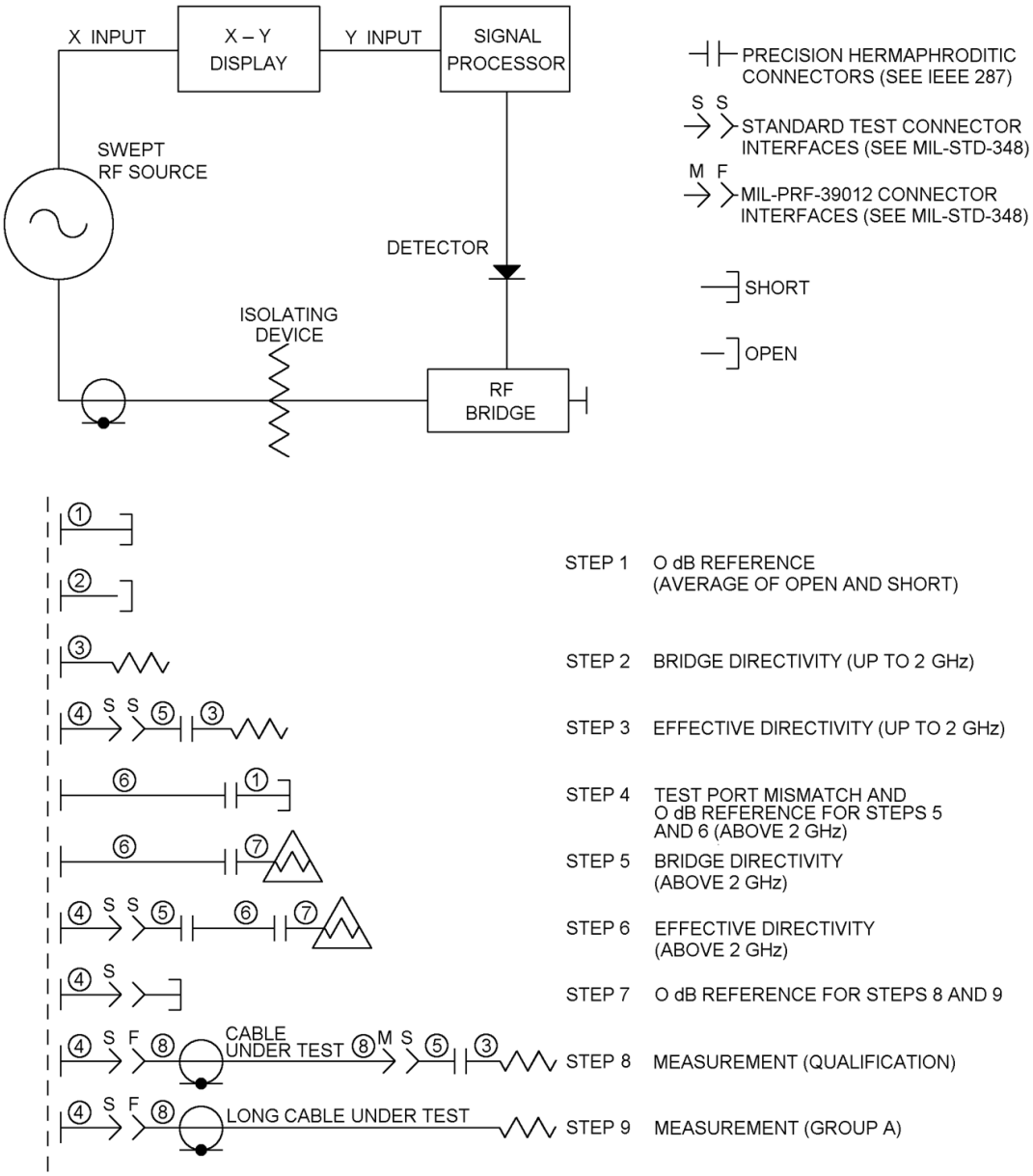

NOTES:
1. Precision short.
2. Precision open.
3. Precision termination.
4. Standard precision adapter, maximum VSWR as specified (see MIL-PRF-39012).
5. Standard precision adapter, maximum VSWR as specified (see MIL-PRF-39012).
6. Precision air-line, maximum VSWR 1.006 +.002F (F in GHz).
7. 20 dB offset.
8. Selected MIL-PRF-39012 connector.

FIGURE 7. Swept frequency RF bridge method for standing wave ratio (return loss) test.

Source: https://assist.dla.mil -- Downloaded: 2016-11-03T17:46Z
Check the source to verify that this is the current version before use.

4.8.10. Capacitance (see 3.7.9). The capacitance, in picofarads per foot, of the specimen shall be measured at 1 kHz, unless otherwise specified (see 3.1). The following details shall apply:

a. The specimen length shall be less than 1/40 wavelength but not less than 5 feet.

b. Coaxial cables. The capacitance shall be measured between the inner conductor and the outer conductor, with the outer conductor grounded.

c. Two-conductor cables. The capacitance between the two inner conductors shall be measured by a two or three terminal technique.

(1) Two-terminal method. With the outer conductor connected to the ground terminal of the capacitance bridge, the capacitance shall be determined from the following formula:

$$\text{Capacitance} = \frac{2\,(C_a + C_b) - C_c}{4}$$

Where: C_a Capacitance between no. 1 conductor and no. 2 conductor, with no. 2 conductor connected to the outer conductor.

C_b Capacitance between no. 2 conductor and no. 1 conductor, with no. 1 conductor connected to the outer conductor.

C_c Capacitance between no. 1 and no. 2 conductors (when tied together) and the outer conductor.

(2) Three-terminal method. The capacitance shall be determined from the following formula:

$$\text{Capacitance} = C_d + \frac{C_e + C_f}{4}$$

Where: C_d = Capacitance between no. 1 conductor and no. 2 conductor, with the outer conductor connected to the ground terminal of the capacitance bridge.

C_e = Capacitance between no. 1 conductor and the outer conductor, with no. 2 conductor connected to ground.

C_f = Capacitance between no. 2 conductor and the outer conductor, with no. 1 conductor connected to ground.

4.8.11 Capacitance stability (see 3.7.10). The capacitance, in picofarads per foot, shall be measured as specified in. The length of the specimen shall be approximately 50 feet, except that for cables with solid outer conductors the length of the specimen shall be approximately 10 feet. The specimen shall be subjected to the applicable temperature cycle shown in table IX, for a total of three cycles. Test temperatures for cables with dielectric cores not listed in table IX shall be as specified (see 3.1). Capacitance measurements shall be made initially and after each step.

TABLE IX. Temperature cycling.

Source: https://assist.dla.mil -- Downloaded: 2016-11-03T17:46Z
Check the source to verify that this is the current version before use.

Step	Type A dielectric °C temperature	Type F dielectric °C temperature	Time hours
1	+ 75 ± 2	+ 250 ± 5	4 to 8
2	+25 +10, -5	+25 +10, -5	4 minimum
3	-40 ±2	-55 ±2	4 to 8
4	+25 +10, -5	+25 +10, -5	4 minimum

4.8.12 Capacitance unbalance (see 3.7.11). The capacitance, in picofarads per foot, shall be measured as specified in. The length of the specimen shall be as specified in. The capacitance between the two inner conductors of the two-conductor cable shall be measured by the two- or three-terminal technique as specified in. The capacitance unbalance in percent shall be determined from the following formula:

a. Two-terminal method:

$$\text{Capacitance unbalance} = \frac{400\,(C_a - C_b)}{2\,(C_a + C_b) - C_c}$$

b. Three-terminal method:

$$\text{Capacitance unbalance} = \frac{400\,(C_e - C_f)}{4\,(C_d + C_e) - C_f}$$

4.8.13 Transmission unbalance (see 3.7.12). The transmission unbalance of a two-conductor coaxial cable is defined as the ratio of the absolute magnitude of the vector difference of the voltages across each half of a terminating resistor to one half of the absolute magnitude of the vector sum of the two voltages, expressed mathematically as follows:

$$\text{Transmission unbalance (TUB)} = \frac{|\,V_2 - V_1\,|}{\tfrac{1}{2}\,|\,V_2 + V_1\,|} \times 100\ \%$$

Where: TUB = Transmission unbalance, in percent.

V_2 = Vector voltage across half of the terminating resistor, in volts.

V_1 = Vector voltage across the other half of the terminating resistor, in volts.

4.8.13.1 Specimen. The specimen to be measured shall be approximately 100 feet in length.

4.8.13.2 Equipment. The accuracy of the measuring equipment shall be ± 2% over the test frequency (see 3.1). Figure 8 shows a block diagram of the transmission unbalance test equipment.

Source: https://assist.dla.mil -- Downloaded: 2016-11-03T17:46Z
Check the source to verify that this is the current version before use.

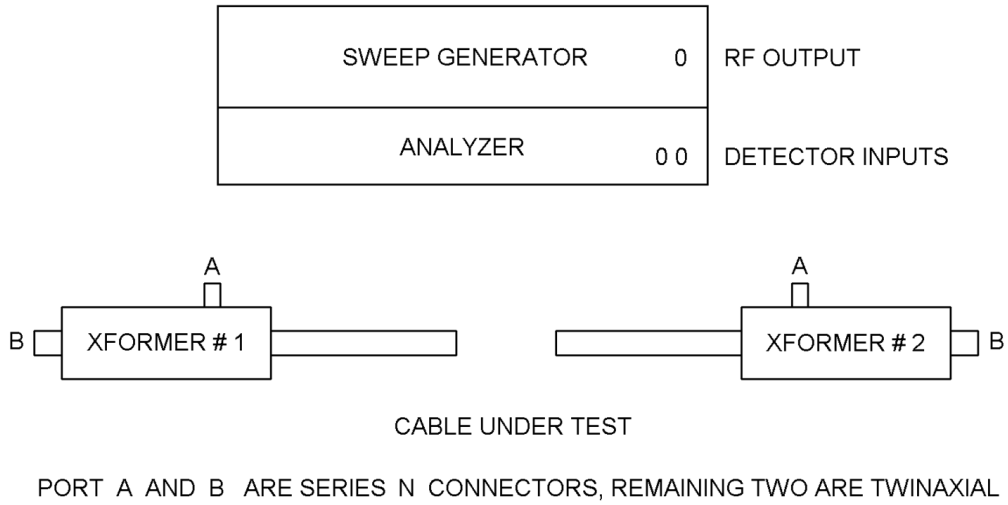

FIGURE 8. Block diagram of transmission unbalance test equipment.

4.8.13.3 Measurement. The input transformer transmits two signals which are vectorially equal down the two-conductor line. The signal from detector number 1 on the output transformer is the magnitude of the vector difference of the voltages across each half of the terminating resistor, and the signal from detector number 2 is the magnitude of the vector sum of the two voltages. The oscilloscope has logarithmic vertical amplifiers that allow the measurement of the ratio of the signals from the two detectors, expressed in decibels as follows:

$$\text{TUB}(\%) = 200/\left(\text{ANTILOG}_{10}\left(\frac{\text{dB scope}}{20}\right)\right)$$

The residual error of the tests system may be obtained by removing the sample, connecting the respective test ports and measuring the system unbalance. The maximum unbalance of the specimen shall not exceed the specified value (see 3.1).

4.8.13.4 Calibration of transmission unbalance system. Calibration shall be performed as follows:

a. Connect test port A to test port B.

b. Switch on the frequency markers of the sweep oscillator. Connect channel A of detector number 2 to the generator video input, and the generator vertical to the scope channel A port. By varying the frequency dial and sweep width controls of the sweep oscillator, obtain the required test frequency range.

c. Remove detector number 1 from detector port B and replace it with a 50-ohm load. Connect channel A to detector number 2 of the scope.

d. Obtain a signal from detector number 2 on channel A. Trace this signal on the scope screen. Preset channel A attenuator to zero.

e. Insert a 10-dB pad between detector port number 2 and detector number 2.

Source: https://assist.dla.mil -- Downloaded: 2016-11-03T17:46Z
Check the source to verify that this is the current version before use.

f. Adjust channel A attenuator so that the average of the scope display and traced line are equal.

g. Insert a 20-dB pad between detector port number 2 and detector number 2. Draw the trace on the face of the scope.

h. Remove detector number 2 from detector port number 2, and replace it with detector number 1. Connect the lead from detector to channel B vertical input.

i. Obtain trace from detector number 1 by inserting a 20-dB pad between detector and connecting port. The frequency tracking of the two detectors should not vary more than ± 0.5 dB.

j. Repeat steps (d), (e) and (f) with detector number 1 connected to detector port number 2. The lead from detector number 1 must be connected to the channel B vertical input of the scope.

k. Return detectors to their original positions.

4.8.13.5 Measurement procedure for transmission unbalance system. The following test procedure or one suitable to the Government shall be used for measuring transmission unbalance. In the event of conflict, the following method shall be the referee test.

Equipment used: Sweep generator (set to sweep 100-160 MHz).
Analyzer and printer.
1 or 2 RF detectors.
2 Telplex (Alford) transformers w/calibration device.
1 or 2 50 Ohm loads.

Procedure:

a. Prepare specimen and install applicable connectors.

b. Connect specimen between test port A and test port B.

c. Preset variable attenuators A and B to zero.

d. Switch the display control of the scope to channel A and B position.

e. Using the channel A variable attenuator, position the channel A trace at the center of the scope screen.

f. Using the channel B variable attenuator, position the channel B trace so that it covers the channel A trace.

g. The difference, in dB, of the channel A and B variable attenuators is the unbalance of the two signals.

h. Convert the dB difference of channel A and B to the percentage of transmission unbalance by using table X.

TABLE X. Relationship between transmission unbalance and the difference in signals.

Source: https://assist.dla.mil -- Downloaded: 2016-11-03T17:46Z
Check the source to verify that this is the current version before use.

Transmission unbalance	Difference in signal	Transmission unbalance	Difference in signal	Transmission unbalance	Difference in signal
Percent	dB	Percent	dB	Percent	dB
2	40.0	12	24.5	22	19.0
3	36.0	13	24.0	23	18.9
4	34.0	14	23.0	24	18.4
5	32.0	15	22.5	25	18.0
6	30.0	16	22.0	26	17.8
7	29.0	17	21.5	27	17.4
8	28.0	18	21.0	28	17.0
9	27.0	19	20.5	29	16.8
10	26.0	20	20.0	30	16.4
11	25.6	21	19.5		

4.8.14 Mechanically induced noise (see 3.7.13). The electrical noise-generated in a cable by mechanical motion shall be determined by the following test.

4.8.14.1 Preparation of cable. Cut cables to be tested into 7-foot lengths. Fit one end of cable with a suitable connector. Remove 2 inches of the outer jacket from the other end of the cable leaving the braid intact. Push braid back and cut off 1 inch of the dielectric and center conductor. Cover the open end with three layers of electrical tape. Pull braid over the tape. Twist and solder to form an interference shield.

4.8.14.2 Instrumentation.

a. Amplifier.

(1) Input impedance: 10 megohms minimum.

(2) Frequency response: dc to 1 megahertz minimum.

(3) Sensitivity: 10 microvolts/centimeter minimum.

b. Oscilloscope.

c. Recorder.

(1) For digital, storage scope with X-Y output to X-Y recorder.

(2) For nondigital, storage scope oscilloscope camera.

d. Appropriate weight with cable clamp. One pound weight for cables up to 0.2 inch in diameter and a five-pound weight for cable over 0.2 inch in diameter.

e. Six cable clamps of suitable size and circumferential compression type.

f. Suitable cable connector for interfacing with amplifier.

Source: https://assist.dla.mil -- Downloaded: 2016-11-03T17:46Z
Check the source to verify that this is the current version before use.

4.8.14.3 Equipment set-up. Clamp the cable in place so that the interference shield is just beyond three of the clamps and the inside clamps are 4 feet apart and such that 5 feet of slacked cable hangs freely between the support. Clamp the weight midspan of cable (that is, 30 inches from either end of the 5 feet of cable supported between the clamps). Connect the cable to be tested to the amplifier and oscilloscope. Shield as necessary to prevent noise pick-up (see figure 9).

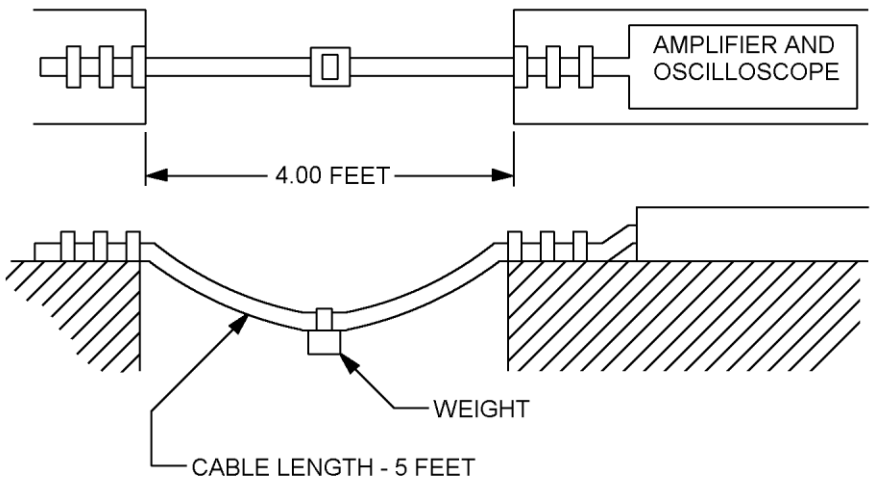

FIGURE 9. Equipment setup.

4.8.14.4 Calibration of instruments. Set the gain of the amplifier so the specified maximum peak-to-peak noise can be easily determined. Calibrate the amplifier and oscilloscope for an accuracy of ± 5%. Set the oscilloscope in the single sweep mode with a sweep speed of 1 cm per second and the sensitivity to 10 μV/cm, lower frequency 3 dB response to .1 Hz, upper frequency 3 dB response to 10 kHz.

4.8.14.5 Test procedure. Pull cable through 90° arc until cable, weight, and clamp are in a horizontal plane. If a camera is used, open the camera shutter, trigger the sweep, and release the weight. A mechanical release device may be used, if desired to assure repeatability of the measurements. Repeat this procedure until eight individual sweeps have been recorded.

4.8.15 Time delay (see 3.7.14).

4.8.15.1 Specimen. Two specimens shall be tested for time delay. The test frequency shall be as specified (see 3.1). The length of the specimen shall be determined from the following formula:

$$L = \frac{983.6}{f\sqrt{e}}$$

Where: L = Specimen length, in feet.
f = Specified frequency, in MHz.
e = Dielectric constant of cable dielectric core.

Source: https://assist.dla.mil -- Downloaded: 2016-11-03T17:46Z
Check the source to verify that this is the current version before use.

4.8.15.2 Procedure. The time delay measurement shall be performed as follows. The specimen shall be connected to the measurement apparatus shown on figure 10. The characteristic impedances of the specimen, the signal generator, the frequency counter, and the load impedance (Z_o) shall be identical. All interconnections shall be as short and free of electrical mismatch as possible.

The signal generator shall be set to a frequency that is five times the specified frequency, and varied until a Lissajous pattern on the screen of the oscilloscope forms a straight line. The positions of the signal generator and Z shall then be reversed, and the oscilloscope screen observed. If a straight line is not now present, adjust the interconnections until a straight line is formed for both the normal and reversed positions of the signal generator and Z_o.

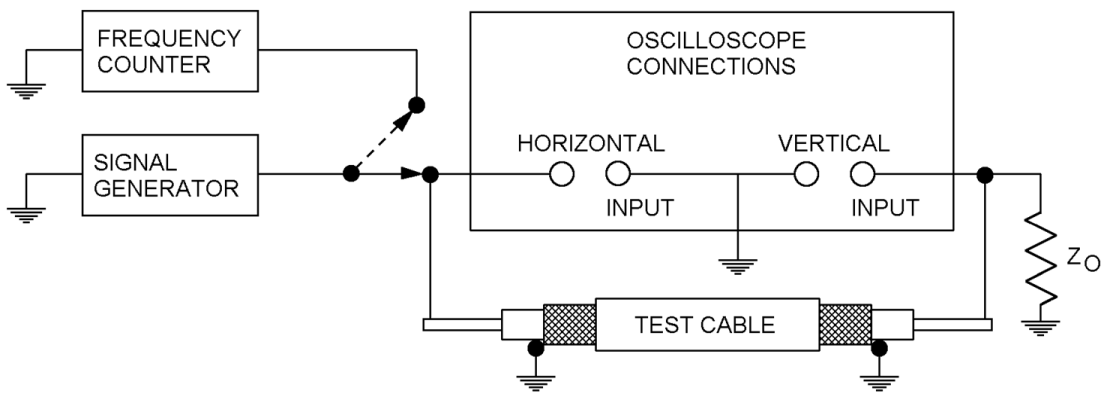

FIGURE 10. Block diagram of apparatus for measuring time delay.

Go back to the original position, by repositioning the apparatus as originally shown in the block diagram. Reset the frequency of the signal generator to the specified frequency and vary it until the Lissajous pattern displayed on the screen of the oscilloscope forms a straight line. The thickness of this line shall not exceed 0.01 inch (0.3mm) to establish good resolution. A frequency counter shall then be temporarily inserted, as shown in the block diagram, to determine the exact frequency of the signal generator. This frequency shall then be recorded as the first resonance frequency (f_1). The frequency counter shall be removed, and the frequency of the signal generator shall be increased until the Lissajous pattern forms yet another line on the oscilloscope screen with the same direction as the first line. Again, the thickness of the line shall not exceed 0.01 inch (0.3 mm). The frequency counter shall again be temporarily inserted to determine the second resonance frequency (f_2). This procedure shall be repeated until five successive frequencies have been determined. The time delay per foot of the cable shall then be computed as shown in the formula below. Beginning with the specified frequency, successive frequencies shall be determined, using this method.

Source: https://assist.dla.mil -- Downloaded: 2016-11-03T17:46Z
Check the source to verify that this is the current version before use.

$$TD = \left\{ \frac{1}{f_1} + \frac{2}{f_2} + \frac{3}{f_3} + \frac{4}{f_4} + \frac{5}{f_5} \right\} \frac{1}{5L}$$

Where: TD = Time delay, in microseconds per foot.

$f_{1, 2, 3, 4, 5}$ = Recorded frequencies, in MHz.

L = Specimen length, in feet.

The time delay shall be calculated for at least two sets of five successive recorded frequencies for each specimen. The average of these values computed shall be within the specified requirement (see 3.1). The specimen shall be reversed and the test repeated.

4.8.16 Aging stability (see 3.7.15).

4.8.16.1 Specimen. Four specimens shall be cut from the sample unit. For cables whose nominal jacket diameter is less than 0.5 inch (12.7 mm), the specimen length shall be 125 ±1 times the cable diameter. For cables whose nominal jacket diameter is 0.5 inch (12.7 mm) or larger, the specimen length shall be 95 ±1 times the cable diameter. For armored cables, the armor shall be removed before the specimen is subjected to the aging stability test.

4.8.16.2 Procedure. The specimen shall be suspended in a heat chamber without touching one another or the walls of the chamber and conditioned for 7 days at the applicable test temperature in table XI. Test temperatures for cable jacket types not listed in table XI shall be as specified (see 3.1). Heated air shall be circulated so as to maintain a uniform test temperature. After the conditioning period, the specimens shall be removed from the heat chamber and conditioned at room ambient temperature for 4 hours minimum.

a. Examine the specimen for cracks, flaws or other damage in the jacket material. For marked cables, examine the marking for legibility.
b. Following the test, the specimen shall be subjected to the cold bend test (see 4.8.19).

TABLE XI. Jacket test temperature.

Jacket types	°C temperature
I, IIa, IV, and VIII	+ 98 ± 2
IIIa	+ 90 ± 2
V and VII	+ 250 ± 5
VI	+ 200 ± 5

4.8.17 Stress crack resistance (see 3.7.16).

4.8.17.1 Specimen. Four specimens, approximately 3 feet long, shall be cut from the sample unit. For armored cables, the armor shall be removed before the specimen is subjected to the stress-crack resistance test.

Source: https://assist.dla.mil -- Downloaded: 2016-11-03T17:46Z
Check the source to verify that this is the current version before use.

4.8.17.2 Procedures. Clamp one end of each specimen to a mandrel whose diameter is three times the nominal jacket diameter of the cable unless otherwise specified (see 3.1). Wrap each specimen for 10 turns around the mandrel and clamp the specimen to the mandrel at this point. The specimens shall be suspended in a heat chamber without touching one another or the walls of the chamber and conditioned for 96 hours minimum at +230ºC ±5ºC. Heated air shall be circulated so as to maintain a uniform test temperature. After the conditioning period, the specimen shall be removed from the heat chamber and conditioned at room temperature for 4 hours minimum.

a. Examine the specimen for cracks, flaws or other damage in the jacket material. For marked cables, examine the marking for legibility.

b. Unwind the specimen from the mandrel and examine for cracks, flaws, or other damage in the jacket material. For marked cables, examine the marking for legibility.

c. After the stress-crack resistance test, the specimen shall be subjected to the cold bend test (see 4.8.19).

4.8.18 Outer conductor integrity (see 3.7.17). Four specimens, approximately 2 feet long, shall be cut from the sample unit. The specimens shall be suspended in a heat chamber without touching one another or the walls of the chamber and conditioned for 1 hour 30 minutes minimum at the specified temperature ±5º (see 3.1). Heated air shall be circulated so as to maintain a uniform test temperature. After the conditioning period, the specimens shall be removed from the heat chamber and conditioned at room ambient temperature for 4 hours minimum. The specimen shall then have one end immersed into molten solder to a depth of 0.5 inch minimum for 15 seconds minimum. The molten solder temperature shall be +230°C minimum. After the conditioning period, the specimens shall be removed from the molten solder and conditioned at room ambient temperature for 1 hour minimum. Examine the specimens for cracks, flaws, or other damage in the outer conductor material.

4.8.19 Cold bend (see 3.7.18). Three specimens shall be cut from the sample unit. The specimen lengths shall be the same as for the aging stability, stress-crack resistance and other outer conductor integrity tests, as applicable (see 4.8.16, 4.8.17, and 4.8.18). The distance between the cable turns wrapped on the mandrel shall not be more than the diameter of the cable; the cable shall make intimate contact with the mandrel.

4.8.19.1 Flexible cables.

a. For armored cables, the armor shall be removed before the specimen is subjected to the cold bend test. One end of each specimen shall be clamped on a mandrel whose diameter is 10 times the normal outside diameter of the specimen in its present test condition. Wrap the specimen around the mandrel for one full turn and hold in place with a mechanical device. The specimens shall be placed in a cold chamber and conditioned for 20 hours minimum at the applicable test temperature. During the conditioning period, the unwrapped portion of the specimen shall be kept reasonably straight. The following details shall apply:

(1) For cables with type F dielectric cores, cables with type IIIa jackets, and cables whose nominal jacket diameter is .250 inch (6.35 mm) or smaller, the test temperature shall be -55ºC ±2ºC.

Source: https://assist.dla.mil -- Downloaded: 2016-11-03T17:46Z
Check the source to verify that this is the current version before use.

(2) For those other cables whose nominal jacket diameter is larger than .250 inch (6.35mm), the test temperature shall be -40°C ±2°C. For those cables that have been previously subjected to the aging stability test and stress-crack resistance tests, the test temperature shall be -35°C ±2°C.

b. After the conditioning period and while the specimens are still at the test temperature, the specimens shall be wrapped around the mandrel for three full, close turns for cables whose nominal outside diameter is less than .500 inch (12.7 mm), or two full close turns for cables whose nominal outside diameter is .500 inch (12.7 mm) or larger. The mandrel shall be turned at a uniform rate of 15 ±3 revolutions per minute during this operation.

c. After the turning operation, the specimen shall be removed from the cold chamber and conditioned at room ambient temperature for 1 hour maximum.

Unwind the specimen from the mandrel and, except at the clamping points, examine for cracks, flaws, or other damage in the outer surface material.

4.8.20 Dimensional stability (see 3.7.19).

4.8.20.1 Flexible cables. A 5-foot minimum specimen shall be cut from the sample unit. The ends of the specimen shall be cut squarely and carefully deburred. Place the specimen in a heat chamber, coiled or straight, and condition for 6 hours minimum at the applicable test temperature (see table XII). Heated air shall be circulated to maintain a uniform test temperature. After the conditioning period, remove the specimen from the heat chamber and condition at room ambient temperature for 4 hours minimum. Measure both ends of the specimen for protrusion or contraction of the inner conductor.

TABLE XII. Material and test temperature.

Material types	°C temperature 1/
Type A dielectric	+ 85 ± 2
Type F dielectric (except with type IX jacket)	+ 250 ± 5
Type F dielectric with type IX jacket	+ 200 ± 5

1/ Test temperature for cable types not listed shall be as specified (see 3.1).

4.8.20.2 Semirigid cables.

a. Specimen. An appropriate 4-foot length shall be cut from the sample unit and used to prepare six specimens. Each specimen shall have a length of 6.00 + .50, -.00 inches with squared and carefully deburred ends. Each specimen shall be placed inside a brass test fixture as shown on figure 11.

Source: https://assist.dla.mil -- Downloaded: 2016-11-03T17:46Z
Check the source to verify that this is the current version before use.

b. Procedure. After insertion of the specimen, the fixture ends shall be closed with caps; the caps shall be tightened with a torque of 8 inch-pounds ±1. Place the fixtures containing the captured specimens in a heat chamber and condition for at least 1 hour at the specified temperature (see 3.1). Heated air shall be circulated so as to maintain the test temperature within ±5ºC. After the conditioning period, the fixtures containing the specimens shall be maintained at room ambient temperature for at least 1 hour. Do not remove specimens from the test fixtures until immediately before measuring, and then remove one at a time. Measure the protrusion or contraction of the insulation with respect to the outer conductor on both specimen ends. Three measurements shall be made at each end, one in each of three different axial specimen orientations spaced approximately 120 apart, so that a total of six measurements are obtained for each specimen.

4.8.21 Contamination (see 3.7.20).

4.8.21.1 Specimen. The specimen length shall be 4 feet minimum for cables whose nominal diameter is more than 0.2 inch, 3 feet minimum for cables whose diameter is from 0.12 to 0.2 inch, and 2 feet minimum for cables whose diameter is less than 0.12 inch.

4.8.21.2 Equipment.. Equipment for the contamination test shall be a Q-meter with an appropriate coil capable of giving an indicated Q-reading of 150 minimum. The resonating test frequency for all measurements shall be 1.2 MHz ± 50 kHz. Resonate the Q-meter to determine its Q-reading (Q_1).

4.8.21.3 Procedure. One end of the specimen shall be cut square. The other end shall be prepared to provide the shortest possible connection to the high terminal of the Q-meter. The shield shall be connected to the “ground” terminal. After attaching the specimen, resonate the Q-meter and take the new Q-reading (Q_2). This initial change in Q-readings (ΔQ_i) between the readings with and without the specimen attached shall be computed as $\Delta Q_i = Q_1 – Q_2$. If the initial change in Q (ΔQ_i) is less than three when using the specified length, the length may be increased so as to obtain a ΔQ_i of at least three. The specimen shall then be placed in a heat chamber and conditioned at +98ºC ±2ºC for 7 days minimum. Heated air shall be circulated so as to maintain a uniform test temperature. After the conditioning period, the specimen shall be removed from the heat chamber and conditioned at room ambient temperature for 1 hour minimum. Again, with the specimen unattached, take a new Q-reading (Q_3). Attach the specimen as before and take another Q-reading (Q_4). This final change in Q-readings (ΔQ_f) between the readings with and without the specimen attached shall be computed as $\Delta_f = Q_3 – Q_4$. The change in ΔQ (ΔQ_f - ΔQ_i) shall not exceed the specified value (see 3.7.20).

4.8.22 Bendability (see 3.7.21). Two specimens, each approximately 1 foot long, shall be cut from the sample unit. The middle section of the specimen shall be formed for two complete turns around a mandrel of specified diameter (see 3.1). Although no special tools are needed to guide the cable as it coils around the mandrel, a mechanism may be provided so as to avoid any damage to the outer conductor. Remove the coiled specimen from the mandrel and examine the outer surface for cracks, splits, fracturing, and wrinkling.

4.8.23 Flammability (see 3.7.22).

Source: https://assist.dla.mil -- Downloaded: 2016-11-03T17:46Z
Check the source to verify that this is the current version before use.

4.8.23.1 Apparatus. The test shall be performed within a test chamber approximately 1 foot square by 2 feet in height, open at top and front to provide adequate ventilation for combustion but to prevent drafts. The specimen holder shall be designed so that the lower end of a 24-inch cable specimen is held by a clamp, while the upper end of the specimen passes over a pulley and can be suitably weighted to hold the specimen taut at an angle of 60º with the horizontal, and in a plane parallel to and approximately 6 inches from the back of the chamber.

The separation between clamp and pulley shall be such that a minimum of 20 inches of the specimen is freely suspended. The test flame shall originate from a Bunsen type gas burner with a one-fourth inch inlet, a needle valve in the base for gas adjustment, three-eight inch bore nominal, and an approximate 4-inch barrel length above the air inlets. The burner shall be adjusted to furnish a 3-inch conical flame with an approximate 1-inch long inner core and a flame temperature not less than 954ºC (1749ºF) at its hottest point, as measured with an accurate 1% full scale thermocouple pyrometer. A sheet of facial tissue shall be suspended taut and horizontal 9.5 inches below the point of application of the flame to the cable specimen and at least one-half inch from the chamber floor, so that any material dripping from the cable specimen shall fall upon the tissue.

Source: https://assist.dla.mil -- Downloaded: 2016-11-03T17:46Z
Check the source to verify that this is the current version before use.

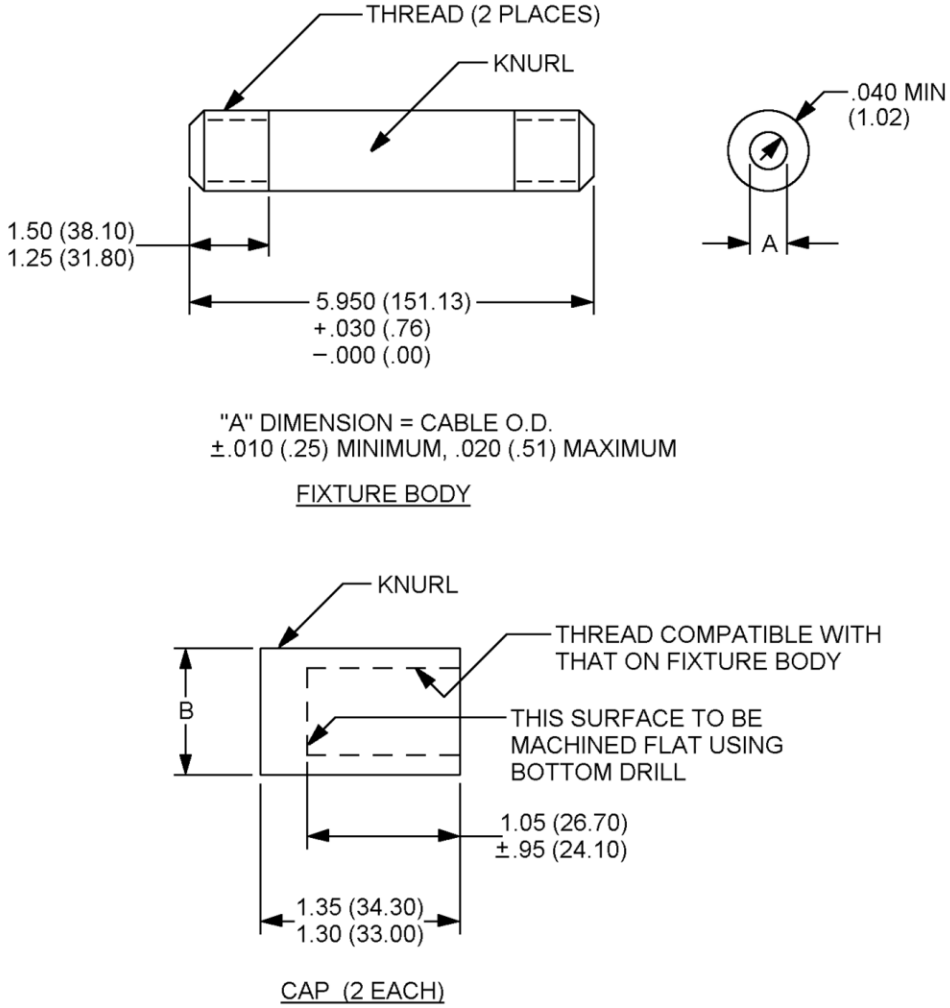

“B” dimension not critical, but to provide for internal threading in accordance with standard shop practices.

NOTES:
1. Dimensions are in inches.
2. Metric equivalents are given for information only.

FIGURE 11. Typical dimension stability test fixture.

Source: https://assist.dla.mil -- Downloaded: 2016-11-03T17:46Z
Check the source to verify that this is the current version before use.

4.8.23.2 Procedure. A 24-inch specimen of cable shall be marked at a distance of 8 inches from its lower end to indicate the point for flame application and placed in the specified 60-degree position in the test chamber. The lower end of the specimen shall be clamped in position in the specimen holder and the upper end shall be passed over the pulley of the holder and held taut. With the burner held perpendicular to the specimen and at an angle of 30° from the vertical plane of the specimen, the hottest portion of the flame shall be applied to the lower side of the cable at the test mark. The test flame shall be applied for 30 seconds for all sizes of cable and then withdrawn immediately at the end of that period. The distance of flame travel upward along the specimen from the test mark and the time of burning after removal of the test flame shall be recorded; also the presence or absence of flame in the facial tissue due to incendiary drip from the specimen shall be recorded. Charred holes or spots in the tissue shall be ignored in the absence of actual flame. Breaking of the cable specimens in sizes 24 and smaller shall not be considered as failure provided the requirements for flame limits, duration of flame, and absence of incendiary dripping are met.

4.8.24 Weight (see 3.9). A section of cable shall be weighed on a scale that has a 0.1% accuracy.

4.8.25 Flame propagation (see 3.7.23). This test determines the relative ability of grouped cable to resist the propagation of fire along its length. Flame propagation shall be tested in accordance with IEEE-1202-1191 or NFPA 262-2002.

4.8.25.1 Specimen. Each specimen shall consist of a piece of completed cable which shall have a length of not less than 8 feet. The total number of specimens required shall be as specified in the vertical tray flame test of IEEE-383.

4.8.25.2 Special apparatus. The apparatus shall include all equipment specified in the vertical tray flame test of IEEE-383.

4.8.25.3 Procedure. The specimens shall be tested as specified in the vertical tray flame test or IEEE-383.

4.8.25.4 Observation. Specimen failure shall be construed when any portion of any specimen burns to the top of the tray, either during or after operation of the ribbon burner. The following information (which does not constitute failure criteria) shall additionally be reported to help expand a performance data base: Flame temperature, period of time between burner shutoff and cessation of flame on the specimen, overall distance of specimen jacket damage above the burner, overall distance of specimen conductor damage above the burner, and a brief description of any dripping or flaming material which falls from the specimen to the floor during the test.

4.8.26 Acid gas generation (see 3.7.24). The method given below is to determine the total emission or any strong soluble acids (pH less than 3). The required apparatus is shown on figure 12. A weighed sample of the jacket, and insulation materials (for component wire, use insulation removed from a 22 AWG wire), normally .25 to .5 gram, shall be placed in a silica boat which is put into the center of a silica tube, length 50/60 centimeters and internal diameter 20/22 millimeters. The materials shall be tested individually. The silica tube shall be placed in the tube furnace. An air supply, derived from a blower or compressed air cylinder, at the rate of 1 liter per minute plus or minus 5% shall be passed through the silica tube and then through four absorber flasks each containing 30 milliliters of deionized water. The furnace heating shall be commenced and the temperature of the tube and sample shall be raised to 800 ± 10°C over a period of approximately 40 minutes and then held at temperature for a further 20 minutes. During the heating period, any acid gases produced will be carried over into the absorber flasks. On completion of the heating cycle, the acid content of the fluids in the absorber flasks shall be titrated against 0.1 N sodium hydroxide solution using congo red as an indicator. The total titre indicates the total soluble acids. 1.0 mL of 0.1 N sodium hydroxide solution is equivalent to 3.65 mg of acid expressed as ‘acid equivalent relative to hydrochloric acid’.

Source: https://assist.dla.mil -- Downloaded: 2016-11-03T17:46Z
Check the source to verify that this is the current version before use.

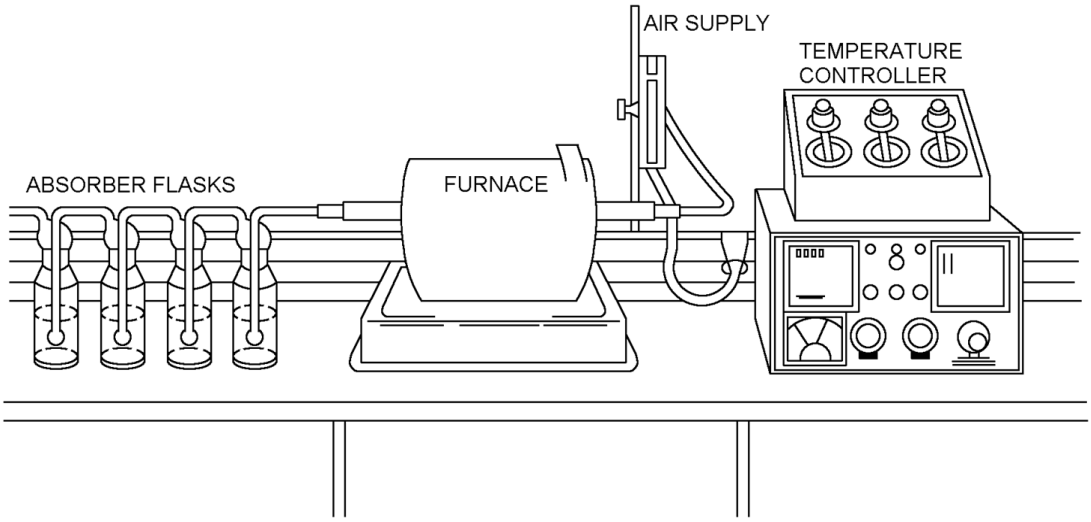

FIGURE 12. Acid gas test apparatus.

4.8.27 Halogen content (see 3.7.25). The halogen content of the cable jacket or fillers shall be determined by X-ray fluorescence or analytically following an examination and analyses of the chemical composition of all ingredients used.

4.8.28 Immersion tests (see 3.7.26). Specimens of the cable jacket material shall be immersed in the fluids shown in table XIII for 24 hours at the temperatures specified. The specimens shall then be removed, blotted to remove excess fluid, then suspended in air at room temperature for not less than 3 hours 30 minutes or more than 4 hours 30 minutes. Each specimen shall be tested as specified in 4.8.37.

TABLE XIII. Immersion test temperatures.

Fluid	Test Temperature
Fuel oil, MIL-DTL-16884	98ºC to 100ºC
Turbine fuel, JP-4, MIL-DTL-5624	48ºC to 50ºC
Turbine fuel, JP-5, MIL-DTL-5624	48ºC to 50ºC
Cleaner, isopropyl alcohol, ASTM D770	20ºC to 25ºC
Hydraulic fluid, MIL-PRF-87257	48ºC to 50ºC
Hydraulic fluid, MIL-PRF-17672	48ºC to 50ºC
Lubricating oil, MIL-PRF-23699	98ºC to 100ºC
Lubricating oil, MIL-PRF-17331	98ºC to 100ºC
Coolant, Monsanto coolanol 25 or equivalent	20ºC to 25ºC

Source: https://assist.dla.mil -- Downloaded: 2016-11-03T17:46Z
Check the source to verify that this is the current version before use.

4.8.29 Smoke index (see 3.7.27). The smoke index shall be measured as specified in NES 711 except the specimens for test shall be as follows:

a. Jacket: Each specimen shall consist of a sufficient number of 75 mm long strips cut from the cable jacket to completely cover the face area of the sample holder. To prevent excessive buckling and distortion of the specimen during test, a wire mesh, manufactured from 1.0 mm diameter stainless steel wire with a spacing of 12.5 mm and a square mesh configuration, shall be placed inside and across the face of the sample holder. The specimen shall be fabricated by placing the specimen holder (with wire mesh) test face down onto a flat surface and positioning each 15 mm length in the holder in a parallel arrangement so that when the holder is in the test position the strips will be vertical. An insulating block 10 mm thick completely wrapped in aluminum foil shall be placed on top of the strips followed by a tension spring and locking pin.

b. Insulation: The test specimen shall be a 1-meter length of' 22 AWG finished wire.

c. Fillers (when applicable): The test specimen shall be 3 by 3 inches (76.2 mm) of 0.070 inch (1.78 mm) thick block of the same material used in the cable.

4.8.30 Toxicity index (see 3.7.28). The toxicity index shall be determined as specified in NES 713. For insulation materials, the toxicity index shall be calculated on the mass of insulation on 1-meter length of finished wire size 22 AWG with a 0.5 mm wall thickness of insulation. For jacket and filler materials, the toxicity index shall be calculated on 100 grams of material. (the toxicity index is derived from the chemical analysis of the products of combustion of the materials.)

4.8.31 Durometer hardness (see 3.7.29). This test shall be to determine whether or not the jacketing material exhibits sufficient hardness for use in cable construction.

4.8.31.1 Specimen. The specimen shall consist of a block of material, of the dimensions specified in ASTM D2240, which shall have been cured in effectively the same manner as when used in cable manufacture.

4.8.31.2 Special apparatus. Apparatus shall include a type A or type D durometer, as specified, which shall be in accordance with ASTM D2240.

4.8.31.3 Procedure. The specimen shall be tested in accordance with ASTM D2240.

4.8.32 Weathering (see 3.7.30). Jacket material shall be tested in accordance with ASTM D2565. The following conditions shall apply:

Xenon arc lamp
6500 Watt
Borosilicate glass filters
Irradiance: 1.75 w/m^2 at 500 nm
Exposure: Arc lamp on: 18 hours.
Black panel temperature 50 ± 2°C
Relative humidity 50 ±2%
(for 18 minutes every 2 hours, water is sprayed onto specimen)

Source: https://assist.dla.mil -- Downloaded: 2016-11-03T17:46Z
Check the source to verify that this is the current version before use.

Arc lamp off: 6 hours.
Temperature 25° ± 2°C
Relative humidity 90-95%
Total exposure time: 1000 hours.

4.8.33 Abrasion resistance (see 3.6.4). Abrasion resistance of cable jacket material shall be determined as specified in 4.8.33.1 through 4.8.33.3.

4.8.33.1 Specimen. Cable jacket: The cable jacket test specimen shall be prepared by extruding material onto a 16 AWG (19/29) conductor. The material shall be manufactured using process conditions as close as possible to those used to produce the overall cable jacket and shall have an overall diameter of 0.119 + 0.001, - 0.000 inch.

4.8.33.2 Special apparatus. Apparatus shall include the following:

a. Abrading machine: A cylinder, which incorporates two abrading elements on its surface, which is motor driven to rotate about a horizontal axis at 17 + 3, - 2 revolutions per minute (r/min) and over which the specimen is draped, as shown on figures 13 and 14, and as described below:

(1) Each abrading element shall consist of 0.312 inch (7.94 mm) square, high-speed tool bit (Cleveland Twist Drill Company number 855 or its equivalent) which has been ground on two adjacent, longitudinal sides to produce a single, sharp 90º longitudinal edge, free of visible nicks. A medium grade grinding wheel (Norton Company number 39C6018VK or its equivalent) shall be used for this grinding. Abrading elements shall be reground as required; in no case shall an abrading element be used in excess of 5 hours without regrinding. Whenever the perpendicular distance between either pair of opposite longitudinal sides of an abrading element becomes less than 0.3085 inch (7.836 mm) (as by repeated regrinding) then that abrading element shall be discarded and replaced.

(2) The cylinder shall be 8 ±.125 inches (203.5 ±3.18 mm) in diameter and shall be rigidly fabricated from metal.

(3) Each of the two abrading elements shall be maintained in electrical contact with the metal cylinder by securing each in a notch cut into the cylinder surface, parallel to the cylinder axis; the two notches required shall be spaced 180º ± 2º apart around the circumference, of the cylinder. These notches shall be cut such that the sharpened 90º longitudinal edge of each element shall be facing outward from the cylinder surface, and such that the midpoint of a straight line drawn between the two longitudinal edges adjacent to the sharpened edge is tangential plus or minus 0.003 inch (0.08 mm) to the cylinder surface.

(4) An automatic counter shall be provided to totalize the number of times that the specimen is scraped by abrading elements during the test.

(5) A 1 pound ± 0.5 ounce weight shall be provided for applying tension to the specimen.

Source: https://assist.dla.mil -- Downloaded: 2016-11-03T17:46Z
Check the source to verify that this is the current version before use.

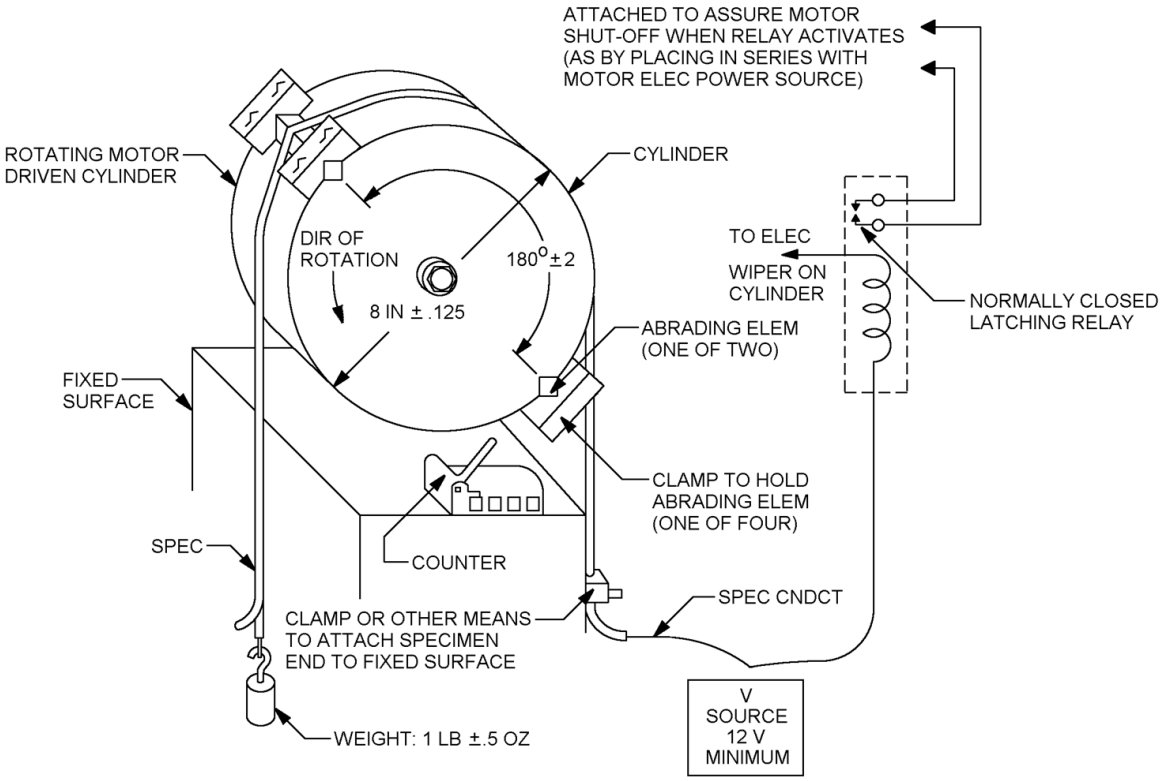

FIGURE 13. Diagram of abrading machine for the abrasion resistance test.

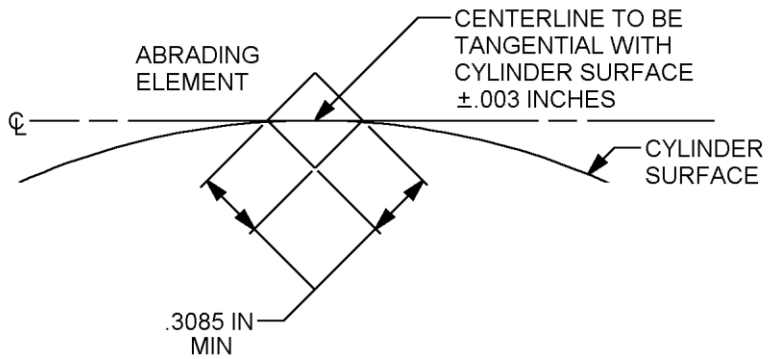

FIGURE 14. Detail diagram of abrading element fit on cylinder surface.

b. Short circuit monitor: A voltage source of not less then 12 V (either direct current (dc) or root mean square (rms) alternating current (ac) which can be applied between the specimen

Source: https://assist.dla.mil -- Downloaded: 2016-11-03T17:46Z
Check the source to verify that this is the current version before use.

conductor and both abrading elements of the abrading machine as shown on figure 13. (The connection to the abrasion elements may be provided by a wiping contact on the cylinder.) A means (such as an electrical relay) shall be provided whereby an electrical connection between either abrading element and the specimen conductor shall automatically stop rotation of the cylinder on the abrading machine (as by removing motor power).

4.8.33.3 Procedure. The specimen shall be wiped with a clean, dry cloth to remove any lubricant or dirt. The specimen shall then be tested (either simultaneously or one at a time) as follows. The specimen shall be hung circumferentially over the cylinder of the abrading machine, such that the specimen shall form an arc of not less than 170º around the cylinder for the remainder of the test. One end of the specimen shall then be secured to a fixed surface. The abrading machine weight shall be attached to the opposite specimen end, such that both the specimen end and the weight shall be freely suspended. The automatic counter shall be set initially to zero, and the short circuit monitor shall be applied between both abrading elements on the abrading machine and the conductor of the specimen. The cylinder motor shall then be turned on, allowing the cylinder to rotate beneath the specimen, from secured end to the weighted end.

4.8.34 Tear strength (see 3.7.32). This test shall determine the ability of elastomeric jacketing material to withstand the propagation of a cut passing through a portion of its length.

4.8.34.1 Specimen. The specimen shall consist of a piece of jacketing material cut to the dimensions specified in ASTM D470. The specimen shall be removed from a completed cable.

4.8.34.2 Special apparatus. Apparatus shall include the following:

a. A micrometer with flat, parallel measurement surfaces on both spindle and anvil, which shall be for the specimen measurements as specified in 4.8.34 and which shall exhibit a measurement error of not more than ±0.001 inch (±.03 mm).

b. A motor driven tensile machine which shall be for applying increasing tension to the specimen, and which shall automatically indicate within ±1% the maximum tension experienced by the specimen prior to tearing. This tensile machine shall incorporate two parallel and opposing jaws, between which the specimen can be secured, as specified in 4.8.34.3. The two jaws shall increase their separation at the uniform rate of 20 ± 2 inches per minute by means of the tensile machine motor.

4.8.34.3 Procedure. The specimen shall be tested In accordance with ASTM D470.

4.8.35 Heat distortion (see 3.7.33). This test shall determine the ability of the jacket material to resist physical deformation when subjected to an elevated temperature.

4.8.35.1 Specimen. The specimen shall be removed from completed cable in accordance with 4.8.35.1.2.

4.8.35.1.1 Cable jacket. The specimen shall consist of a piece of jacketing that has been removed from a finished cable and cut to form a rectangular strip. This strip shall be not less than .875 inch (22.23 mm) long nor less than .562 ±.062 inch (14.27 ±1.57 mm) wide, and shall be ground and buffed to a thickness of 0.050 ±0.010 inch with a grinding apparatus (see 4.8.35.2). The thickness of the specimen shall be made as uniform as practicable.

4.8.35.2 Special apparatus. Apparatus shall include the following:

a. A self-standing thickness gauge, for supporting the requirements as specified in 4.8.35.3,

Source: https://assist.dla.mil -- Downloaded: 2016-11-03T17:46Z
Check the source to verify that this is the current version before use.

which shall exhibit a measurement error of not more than ±0.001 inch (.03 mm). This gauge shall incorporate a flat horizontal platen upon which an entire specimen shall be laid flat during measurement, and shall incorporate a foot which rests upon the top of the specimen during measurement. This foot shall be attached to a plunger which moves freely in the vertical direction, and which is attached to a dial or other indicating device from which the specimen thickness may be read. The foot shall present a horizontal disk of .375 +0, -.016 inch (9.53 +0, -.41 mm) diameter to the specimen, shall bear down upon the specimen with a force of 85 +0, -4 grams and shall be loaded with weights (see 4.8.35.3) to present additional force to the specimen.

b. A motor driven grinding wheel and a motor driven buffing wheel, or their equal, for the specimen preparation as specified in 4.8.35.1. Guides shall be provided to assure that the specimen is pulled tangentially to the surface of each wheel during grinding and buffing.

c. An oven, for accommodating the gage with specimen inserted and for supporting the requirements as specified in 4.8.35.3. The oven air temperature shall be measured in the immediate vicinity of the specimen.

4.8.35.3 Procedure. The initial jacket material thickness of the specimen (T in formula below) shall be determined (see a. below) and the oven shall be preheated to 121º ±1º C. This oven temperature shall be maintained for the remainder of the test. The gauge foot shall then be loaded with 2000 ±100 grams of weight and the gauge placed within the oven. Not less than 1 hour later, the specimen shall be placed in the oven. Not less than 1 hour after placing the specimen in the oven, the specimen shall be placed beneath the gauge foot such that the gauge indicates the specimen thickness. Not less than 1 hour after placing the specimen beneath the gauge foot, the final specimen thickness shall be read from the gauge and the final insulation thickness (t in formula below) determined (see b. below). In an identical manner, the remaining specimens shall also be tested. The percentage heat distortion of the jacket material shall then be calculated by using the following formula:

Percentage heat distortion = Median value of 100(T-t)/T for all tested specimens.

Where: T = Initial jacket material thickness of the specimen, in thousandths of an inch (see a. below).
t = Final jacket material thickness of the specimen, in thousandths of an inch (see b. below).

The following additional details apply:

a. The initial jacket material thickness (T) shall be the initial specimen thickness, as measured with the gauge, prior to loading the gauge with weights and prior to inserting either the gauge or the specimen into the oven.

b. The final jacket material thickness (t) shall be the final specimen thickness, measured as specified.

4.8.36 Physical (aged) (see 3.7.34). This test shall determine whether or not various jacketing materials have been properly processed, by means of tensile measurements. This test makes provisions for making tensile measurements both before and after these materials have been artificially aged.

4.8.36.1 Specimens. Each specimen shall consist of a single piece of jacketing, which shall have sufficient length for use in the tests as specified in 4.8.37, as specified (see 3.1). Specimens shall be

Source: https://assist.dla.mil -- Downloaded: 2016-11-03T17:46Z
Check the source to verify that this is the current version before use.

removed from completed cable.

4.8.36.2 Special apparatus. Apparatus shall include the following:

a. A forced-fresh-air circulating oven for supporting the requirements as specified in 4.8.36.3a. The oven air temperature shall be measured in the immediate vicinity of the specimens.

b. A heated container, which shall be filled with lubricating oil in accordance with symbol number 2190 TEP of MIL-PRF-17331, and which shall be for the specimen immersion as specified in 4.8.36.3b. The oil shall be maintained at a temperature of 121° ± 1°C during specimen immersion.

4.8.36.3 Procedure. Specimens shall be maintained at ambient temperature for a period of not less than 30 minutes immediately prior to any accelerated aging or testing. Each of the specified accelerated aging procedures shall be performed as follows, using one specimen for each procedure. The same specimen shall not be used for more than one procedure. Each of the specified tests shall be performed as specified in 4.8.37.

a. Air oven accelerated aging: Each specimen shall be freely suspended vertically, secured by one end, within the oven. The air temperature within the oven shall then be raised to the value specified in table XIV, and shall be maintained at this value for a continuous period of not less than that specified in table XIV. Each specimen shall then be removed from the oven and tested as specified in 4.8.37.

b. Hot-oil immersion accelerated aging: Each specimen shall be submerged within the hot oil bath for a continuous period of not less than that specified in table XIV. Each specimen shall then be removed from the hot oil bath, blotted lightly to remove excessive oil and then suspended in air, to ambient room temperature, for 4 hours ± 30 minutes. Each specimen shall then be tested as specified in 4.8.37.

4.8.37 Tensile strength and elongation (see 3.7.35). Both aged and unaged specimens of the insulation and jacket material shall be tested in accordance with methods 3021 and 3031 of FED-STD-228. Unless otherwise specified on the applicable specification sheet, there shall be 1-inch bench marks, 1-inch jaw separation, and a rate of jaw travel of 10 inches per minute. The thickness of the specimen shall be measured using any suitable micrometer.

TABLE XIV. Details for accelerated aging procedures.

Specimen material	Procedure	Temperature (°C)	Minimum period (hours)
Jacketing specimen: Cross-linked polyolefin	Air oven Hot-oil immersion	136 ± 2 121 ± 1	168 18

Source: https://assist.dla.mil -- Downloaded: 2016-11-03T17:46Z
Check the source to verify that this is the current version before use.

4.8.38 Inductance (see 3.7.36). Measure Inductance (L) at 1 MHz of a 10 foot 2 inch test cable using any suitable test instrument. The shield shall be floated. The end of the cable shall be shorted. The impedance (Z) shall then be calculated using the following formula:

Where Inductance = L (in Henrys) and Capacitance = C (in Farads):

$$Z = \sqrt{\frac{L}{C}}$$

5. PACKAGING

5.1 Packaging requirements. For acquisition purposes, the packaging requirements shall be as specified in the contract or order. When actual packaging of materiel is to be performed by DoD or in-house contractor personnel, these personnel need to contact the responsible packaging activity to ascertain packaging requirements. Packaging requirements are maintained by the Inventory Control Point's packaging activities within the Military Service or Defense Agency, or within the Military Service System Commands. Packaging data retrieval is available from the managing Military Department's or Defense Agency's automated packaging files, CD-ROM products, or by contacting the responsible packaging activity.

6. NOTES

(This section contains information of a general or explanatory nature that may be helpful, but is not mandatory.)

6.1 Intended use. These cables are intended for use in radio frequency applications. See MIL-PRF-39012 for compatible connectors.

6.2 Acquisition requirements. Acquisition documents should specify the following:

a. Title, number and date of this specification.

b. Title, number and date of the applicable specification sheet.

c. Complete cable PIN (see 1.3).

d. Packaging (see 5.1).

6.3 Qualification. With respect to products requiring qualification, awards will be made only for products which are, at the time of award of contract, qualified for inclusion in Qualified Products List QPL No. whether or not such products have actually been so listed by that date. The attention of the contractors is called to these requirements, and manufacturers are urged to arrange to have the products that they propose to offer to the Federal Government tested for qualification in order that they may be eligible to be awarded contracts or orders for the products covered by this specification. Information pertaining to qualification of products may be obtained from DLA Land and Maritime, Attn: VQP, P.O. Box 3990, Columbus, OH 43218-3990 Email : vqp.cr@dla.mil. An online listing of products qualified to this specification may be found in the Qualified Products Database (QPD) at https://assist.daps.dla.mil.

Source: https://assist.dla.mil -- Downloaded: 2016-11-03T17:46Z
Check the source to verify that this is the current version before use.

6.4 International standardization agreement implementation. This specification implements NATO NEPR No 3. When amendment, revision, or cancellation of this specification is proposed, the preparing activity must coordinate the action with the U.S. National Point of Contact for the international standardization agreement, as identified in the ASSIST database at https://assist.daps.dla.mil.

6.5 Definitions.

6.5.1 Maximum continuous working voltage. The maximum continuous working voltage is that safe voltage that can be continuously applied to a coaxial cable. This voltage is limited by the onset of corona breakdown. The cable working rating is 75% of the corona extinction corona voltage rating.

6.5.2 Maximum operating frequency. Coaxial cables operate In the principal or transverse electromagnetic (TEM) mode. The TEM mode has both the electric and magnetic field lines normal to the direction of propagation. The possibility of propagation in the higher modes limits the usefulness of a coaxial cable to below the lowest higher-mode cut-off frequency. To determine a maximum operating frequency it is necessary to de-rate from the cut-off frequency to forestall the operation of the cable in a mode higher than the TEM mode. Other factors that contribute to a lower operating frequency are the elements of construction of the cable and the associated connectors. The recommended maximum operating frequency takes into account all of these factors, but the user should always check the capabilities of cable and connector assembly before operating at any high frequency.

6.5.3 Velocity of propagation (VP). The velocity of propagation (VP) Is the velocity or an electric wave governed solely by the properties of the dielectric medium and the permeability of the conductor through which it is transmitted. In free space the electromagnetic energy will travel with a speed of $3x10^8$ meters per second or a 100% VP. In a coaxial cable with a uniform dielectric and a conductor with a relative permeability of 1, the VP is always less than 100%. Hence, the VP of a coaxial cable is the ratio of the speed of electromagnetic energy flow compared to the speed of light.

$$\% \text{ VP} = \frac{\text{Velocity of energy in a cable dielectric medium}}{\text{Velocity of energy in free space}} \times 100\%$$

The VP in a cable may be found by resonating a length of cable at 100 MHz or more, with one end short-circuited or open-circuited in accordance with the following formula:

$$\% \text{ VP} = \frac{F_r \text{ X Cable length (feet)}}{2.46 \text{ X N}}$$

Where: N = Number of quarter wavelengths in the cable specimen.
F_r = Resonant frequency.

A simpler method of computing the % VP uses the effective dielectric constant of the dielectric medium.

$$\% \text{ VP} = \frac{1}{\sqrt{e}} \text{ X } 100\%$$

Source: https://assist.dla.mil -- Downloaded: 2016-11-03T17:46Z
Check the source to verify that this is the current version before use.

6.5.4 Power rating (CW). The maximum power-handling capability, in watts, is the amount of power that a coaxial cable can safely transmit without overheating or developing a dielectric breakdown throughout the usable frequency range. The safe power-handling capabilities are shown on the associated curves. These curves have been derated with an assumption of a VSWR of 2, an ambient temperature range of +38ºC to +71ºC for PE dielectric, and +38ºC to +149ºC for PTFE dielectric, and also a maximum inner conductor temperature of +85ºC for PE and +200ºC for PTFE. The curves have also taken into account the effects of typical system Installations (i.e., bends, clamps, thermally insulated sections, etc.).

6.5.5 Coaxial connectors. The applicable connector series is given on the specification sheet, although many other connectors are constructed particularly for these coaxial cables. Extreme care is to be taken in handling a coaxial cable for assembly to connectors so as not to work-harden, overheat, or damage the cable components.

6.5.6 Minimum recommended bend mandrel radius for normal use. The minimum recommended bend radius for a coaxial cable in normal usage Is given on the specification sheet. The radius given is to the outer surface of the cable. This minimum bend radius is dependent upon the material of the outer conductor and its thickness. If possible and the attenuation requirements allow it, add a service length to the cable. Do not use tight bend radii unless the application warrants it. Extreme care should be taken in the forming to prevent wrinkling or cracking.

6.5.7 Operating temperature range. The operating temperature range is the limits between which a cable may be operated continuously without any loss in the basic properties of the cable. This includes the ambient temperature plus the increased temperature due to inner conductor operation. This temperature range is just a guideline, since the mechanical, environmental and electrical requirements of the application contribute to the allowable temperature range. In no case should the testing temperatures be considered as the operating temperature range. Testing is usually done under accelerated conditions so as to possibly degrade the materials.

6.5.8 Maximum operating temperature for semirigid cables. Heating semirigid cables and cable assemblies to exceed specified temperatures will cause permanent increases in the outer conductor diameter (see 3.1). These, in turn, will increase the characteristic impedance, decrease conductor adherence capacitance and corona extinction voltage, and cause VSWR increases in cable assemblies. While effects of temporary heating during soldering processes can be minimized or eliminated, the effects of long-term heating of semirigid cables and cable assemblies must be taken into consideration by the designers.

6.6 Preconditioning semirigid cables.

a. The electrical and mechanical performances specified for semirigid cables are achieved by a compression fit between the outer conductor and the dielectric core which, in turn, necessitates manufacturing processes that cause deformation of the core by compression and elongation. The resulting stress that is initially non-uniform tends to equalize by cold flow within a few weeks after the manufacturing, and will cause withdrawal of the core into the cable. If this occurs in cable that has become part of a cable assembly, the resultant development of an air-void at the cable-connector interface causes VSWR increase. It is therefore advantageous to achieve core stress relief by preconditioning cable before it becomes a cable assembly.

Source: https://assist.dla.mil -- Downloaded: 2016-11-03T17:46Z
Check the source to verify that this is the current version before use.

b. Preconditioning is not effective on long lengths of cable. Bending of cable, which is usually involved in the manufacture of cable, tends to introduce non-uniform core stresses; therefore, preconditioning is more effective when performed on cable assemblies that are complete except for the final end preparation and before attaching the connector. Since preconditioning will result in withdrawal of dielectric into the cable, preparation of the cable assembly should allow for a .250 inch (6.35 mm) length on each cable end beyond the design dimension. The outer conductor and the core should not be cut to the final dimensions until preconditioning has been completed.

c. A recommended preconditioning procedure consists of three of the following temperature cycles:

(1) Step 1. Heat the specimen to the maximum operating temperature specified and maintain for 1 hour minimum (see 3.1).

(2) Step 2. Return specimen to room ambient temperature. Trim protruding core, if any, flush with the edge of the outer conductor.

(3) Step 3. Maintain specimen at room temperature for 1 hour minimum.

(4) Step 4. Cool specimen to -45°C and maintain for 1 hour minimum.

(5) Step 5. Return specimen to room temperature and maintain for 1 hour minimum.

d. After the last temperature cycle, maintain the specimen at room temperature for 24 hours minimum before proceeding with further processing.

e. Recommendations for dealing with special requirements should be obtained from cable manufacturers.

6.7 Suggested cable preparation. Suggested method for making cable ends corona-free is shown on figure 15.

Step 1: Suggested length of cable specimen is 36.00 inches (914.40 mm).

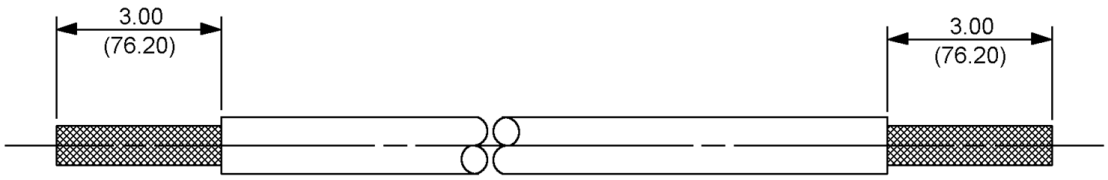

Step 2: Remove 3.00 inches (76.20 mm) of jacket material from each end.

FIGURE 15. Suggested method for making cable ends corona free.

Source: https://assist.dla.mil -- Downloaded: 2016-11-03T17:46Z
Check the source to verify that this is the current version before use.

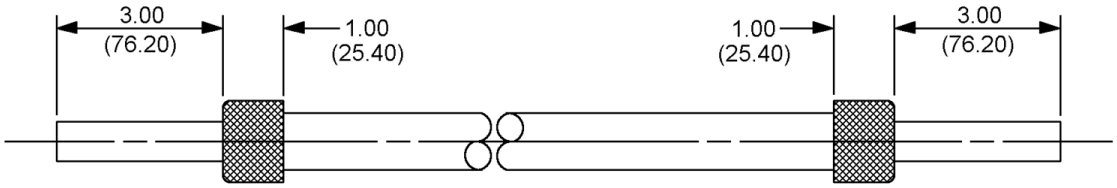

Step 3: Roll back the braid over the jacket and trim as shown. Be careful to avoid breaking any strands. Trim the braid edges neatly to 1.00 inch (25.40 mm) lengths.

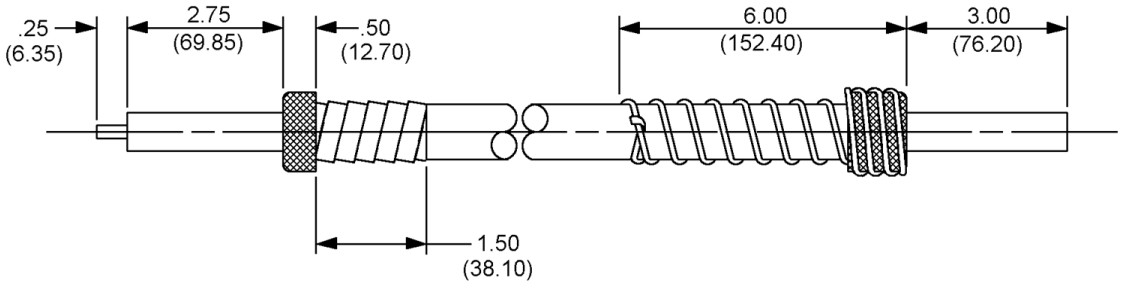

Step 4: Trim one end of the specimen to the dimensions shown and cover the braid edge and jacket with a plastic tape as shown. Wrap an AWG No. 20 copper grounding wire tightly over the braid.

FIGURE 15. Suggested method for making cable ends corona free – Continued.

6.8 Environmentally preferable material. Environmentally preferable materials should be used to the maximum extent possible to meet the requirements of this specification. As of the dating of this document, the U.S. Environmental Protection Agency (EPA) is focusing efforts on reducing 31 priority chemicals. The list of chemicals and additional information is available on their website at http://www.epa.gov/osw/hazard/wastemin/priority.htm. Included in the list of 31 priority chemicals are cadmium, lead, and mercury. Use of these materials should be minimized or eliminated unless needed to meet the requirements specified herein (see section 3).

6.9 Subject term (key word) listing.

Triaxial
Triax
Twinaxial
Twinax
RF
Electrical
Microwave

Source: https://assist.dla.mil -- Downloaded: 2016-11-03T17:46Z
Check the source to verify that this is the current version before use.

6.10 Changes from previous issue. The margins of this specification are marked with vertical lines to indicate where changes from the previous issue were made. This was done as a convenience only and the Government assumes no liability whatsoever for any inaccuracies in these notations. Bidders and contractors are cautioned to evaluate the requirements of this document based on the entire content irrespective of the marginal notations and relationship to the last previous issue.

Source: https://assist.dla.mil -- Downloaded: 2016-11-03T17:46Z
Check the source to verify that this is the current version before use.

APPENDIX A

PROCEDURE FOR GROUP QUALIFICATION INSPECTION

A.1 SCOPE

A.1.1 Scope. This appendix details the procedure for group qualification inspection of cables covered by this specification. The procedure for extending qualification of the required sample to other cables covered by this specification is also outlined herein. This Appendix is a mandatory part of the specification. The information contained herein is intended for compliance.

A.2 APPLICABLE DOCUMENTS. This section is not applicable to this appendix.

A.3 EXTENT OF QUALIFICATION

A.3.1 Group qualification. The cable types listed in column 3 of table A-I are eligible for group qualification. The groups are based on similar characteristics and requirements. At the discretion of the Government, qualification may be extended to cover any or all cable types in a group, based on compliance of one cable type in that group with the qualification inspection. The Government reserves the right to authorize performance of any or all qualification inspection on additional types in the group that are considered necessary to the extension of qualification within each group. Cable types not included in these groups are not eligible for group qualification. Group qualification will be granted final acceptance contingent upon receipt of successful retention of qualification data for individual cables within 2 years.

Source: https://assist.dla.mil -- Downloaded: 2016-11-03T17:46Z
Check the source to verify that this is the current version before use.

APPENDIX A

TABLE A-I. Group qualification. 1/ 2/ 3/

Group	Submission and qualification of any of the following cable types	Qualifies the following cable types
I	M17/84-RG223	M17/167-00001
II	M17/60-RG142	M17/111-RG303, M17/158-00001, M17/170-00001
III	M17/67-RG177	M17/79-RG318, M17/78-RG217, M17/160-00001, M17/165-00001, M17/166-00001
IV	M17/137-00001	M17/139-00001
V	M17/65-RG165	M17/86-00001, M17/159-00001
VI	M17/152-00001	M17/113-RG316
VII	M17/131-RG403	M17/93,RG-178, M17/169-00001
VIII	M17/28-RG058	M17/155-00001
IX	M17/52-RG119	M17/156-00001
X	M17/54-RG122	M17/157-00001
XI	M17/72-G211	M17/161-0001
XII	M17/73-RG212	M17/162-00001
XIII	M17/74-RG213	M17/74-RG215, M17/163-00001
XIV	M17/75-RG214	M17/164-00001
XV	M17/92-RG115	M17/168-00001
XVI	M17/112-RG304	M17/171-00001
XVII	M17/119-RG174	M17/173-00001
XVIII	M17/127-RG393	M17/174-00001
XIX	M17/128-RG400	M17/175-00001
XX	M17/93-RG178	M17/169-00001

1/ Swept cables automatically qualify their non-swept counterpart (i.e., M17/28-RG058 qualifies M17/155-00001).
2/ Qualification of an unarmored cable automatically qualifies its armored version, when requested by the manufacturer.
3/ Qualification of any semi-rigid cable in a series described by a single detail specification sheet automatically qualifies any other version in the same series, when requested by the manufacturer.

Source: https://assist.dla.mil -- Downloaded: 2016-11-03T17:46Z
Check the source to verify that this is the current version before use.

CONCLUDING MATERIAL

Custodians:
Army – CR
Navy – EC
Air Force – 85
NASA – NA
DLA - CC

Review activities:
Army – AR, AT, CR4, MI
Navy – AS, MC, OS, SH
Air Force – 19, 99

Preparing activity:
DLA - CC

(Project 6145-2013-013)

NOTE: The activities listed above were interested in this document as of the date of this document. Since organizations and responsibilities can change, you should verify the currency of the information above using the ASSIST Online database at https://assist.dla.mil .

Source: https://assist.dla.mil -- Downloaded: 2016-11-03T17:46Z
Check the source to verify that this is the current version before use.