NOT MEASUREMENT SENSITIVE

MIL-STD-40051-1
w/CHANGE 3
21 March 2008

SUPERSEDING
MIL-STD-40051-1
w/Change 2
30 July 2007

DEPARTMENT OF DEFENSE STANDARD PRACTICE

PREPARATION OF DIGITAL TECHNICAL INFORMATION
FOR
INTERACTIVE ELECTRONIC TECHNICAL MANUALS (IETMs)

AMCS 7541 **AREA TMSS**

DISTRIBUTION STATEMENT A. Approved for public release; distribution is unlimited.

Source: https://assist.dla.mil -- Downloaded: 2016-12-05T17:12Z
Check the source to verify that this is the current version before use.

FOREWORD

1. This standard is approved for use by the Department of the Army and the Department of the Marine Corps and is available for use by all Departments and Agencies of the Department of Defense (DoD).

2. This standard establishes the technical content requirements and mandatory style, format and functionality requirements for the preparation of Interactive Electronic Technical Manuals (IETMs) and subsequent revisions required to support the various types of equipment and weapon systems within the Department of the Army and the Department of the Marine Corps. The requirements contained in this standard cover operation and maintenance at all levels through overhaul (depot), including Depot Maintenance Work Requirements (DMWRs) and National Maintenance Work Requirements (NMWRs).

3. This 2-part book form consists of the following parts.

MIL-STD-40051-1	—	Preparation of Digital Technical Information for Interactive Electronic Technical Manuals (IETM)
MIL-STD-40051-2	—	Preparation of Digital Technical Information for Page-Based Technical Manuals

4. Comments, suggestions, or questions should be addressed to USAMC Logistics Support Activity, ATTN: AMXLS-AP, Redstone Arsenal, Al 35898-7466 or emailed to logsa.tmss@conus.army.mil. Since contact information can change, you may want to verify the currency of this address information using the ASSIST Online database at http://assist.daps.dla.mil/online/start.

Source: https://assist.dla.mil -- Downloaded: 2016-12-05T17:12Z
Check the source to verify that this is the current version before use.

SUMMARY OF CHANGE 3 MODIFICATIONS

The following modifications to MIL-STD-40051-1 have been made:

Paragraph/Figure/Table	Modification
3.53	Changed
3.137	Changed
Figure E-2	Changed
F.5.3.4.3 (Part in quotes)	Changed
F.5.3.4A	Added
F.5.3.4.1A	Added
F.5.3.4.2A	Added
F.5.3.4.3A	Added
F.5.3.4.4A	Added
G.5.3.3.3 (Part in quotes)	Changed
G.5.3.4.4c(1)	Changed
G.5.6.3 (Part in quotes)	Changed
Figure G-4	Changed
Figure G-7	Changed

Source: https://assist.dla.mil -- Downloaded: 2016-12-05T17:12Z
Check the source to verify that this is the current version before use.

CONTENTS

PARAGRAPH PAGE

FOREWORD ..... **ii**

1. SCOPE **1**
1.1 Scope 1
1.2 Paragraphs with limited applicability 1
1.3 Use of the technical content 1

2. APPLICABLE DOCUMENTS **1**
2.1 General 1
2.2 Government documents 1
2.2.1 Specifications, standards and handbooks 1
2.2.2 Other Government documents and publications 3
2.3 Non-Government publications 4
2.4 Order of precedence 5

3. DEFINITIONS **5**

4. GENERAL REQUIREMENTS **21**
4.1 General 21
4.2 Types of technical manuals 21
4.3 Selective application and tailoring 21
4.4 Preparation of digital data for electronic delivery 21
4.5 Use of the DTD/Style sheets 22
4.6 Obtaining the DTD/Style sheets 22
4.7 IETM functionality requirements 22
4.8 Technical content, style and format 22
4.8.1 Development of work package technical manuals 22
4.8.2 IETM divisions 23
4.8.2.1 Work packages 23
4.8.3 Font size and style 23
4.8.4 Alerts (Warning or Caution) 23
4.8.4.1 Warning <warning> 23
4.8.4.2 Caution <caution> 23
4.8.4.3 Display of warnings and cautions 23
4.8.4.4 Acknowledgment of alerts 24
4.8.4.5 Pop-up Alerts 24
4.8.4.6 Icons <icon> 24
4.8.4.6.1 Development of icons 24
4.8.4.6.2 Safety warnings with icons <icon> 25
4.8.4.6.3 Hazardous material warnings <warning> 25
4.8.4.6.3.1 Format for hazardous materials warnings with icons <icon> 25
4.8.4.6.3.2 Abbreviated format for hazardous materials warnings with icons <icon> 25
4.8.4.6.4 Equipment damage caution icons <icon> 25
4.8.5 Notes <note> 25

Source: https://assist.dla.mil -- Downloaded: 2016-12-05T17:12Z
Check the source to verify that this is the current version before use.

CONTENTS

PARAGRAPH PAGE

4.8.5.1 Display of notes 25
4.8.5.2 Acknowledgement of notes....26
4.8.6 Work packages....26
4.8.6.1 Work package identification information <wpidinfo> 26
4.8.6.1.1 Display of Work Package Identification Information 26
4.8.6.2 Initial setup information <wpinfo>....27
4.8.7 Work packages....29
4.8.7.1 Work package identification number....29
4.8.8 Maintenance tasks and descriptive information....30
4.8.9 Paragraphs....30
4.8.9.1 Paragraph numbering....30
4.8.9.2 Paragraphs and subparagraph titles....30
4.8.9.2.1 Format....30
4.8.10 Procedural steps 30
4.8.10.1 Procedural step levels 31
4.8.10.2 Procedural step titles....31
4.8.11 Tables and lists....31
4.8.11.1 Table numbering....31
4.8.11.2 Table titles....31
4.8.11.3 Footnotes to tables 31
4.8.11.4 Lists....31
4.8.12 Standard information 32
4.8.13 Display of text....32
4.8.14 Display of illustrations....32
4.8.15 Abbreviations and acronyms....33
4.8.16 Symbols....33
4.8.16.1 General information for symbols....33
4.8.16.2 Metric symbols....33
4.8.17 Nuclear hardness (hardness-critical processes) marking 33
4.8.18 Electrostatic Discharge (ESD) sensitive marking....33
4.8.19 Quality Assurance (QA) 34
4.8.20 Security classification and protective markings 34
4.8.21 Referencing....34
4.8.21.1 Other documents 34
4.8.21.2 Government specifications and standards....34
4.8.21.3 Within the IETM....34
4.8.21.4 Equipment, components, and parts 34
4.8.21.5 National Stock Numbers (NSNs) and Part Numbers (P/Ns) 34
4.8.21.6 Equipment panel markings (placarding)....35
4.8.21.7 Metric and U.S. standard measurements....35
4.8.21.8 Temperature 35
4.8.21.9 Other TMs/IETMs 35
4.8.21.10 Tables....35
4.8.21.11 Figures....35

Source: https://assist.dla.mil -- Downloaded: 2016-12-05T17:12Z
Check the source to verify that this is the current version before use.

CONTENTS

PARAGRAPH PAGE

4.8.21.12 Index numbers....35
4.8.21.13 Items on diagrams....35
4.8.22 Equations....35
4.8.23 Nomenclature....35
4.8.23.1 Nomenclature consistency and applicability....35
4.8.23.2 Official/approved nomenclature....36
4.8.23.3 Military terms....36
4.8.23.4 Automatic electronic test and checkout terminology....36
4.8.24 Comprehensibility....36
4.8.25 Multimedia presentation....36
4.8.26 Graphics....36
4.8.26.1 Graphic format....36
4.8.26.2 Types of graphics....36
4.8.26.2.1 Line drawings....36
4.8.26.2.2 Multiview illustrations....37
4.8.26.2.3 Photographs....37
4.8.26.2.3.1 Photograph quality....37
4.8.26.2.3.2 Retouching....37
4.8.26.2.3.3 Use of photographs in place of line drawings....37
4.8.26.2.4 Engineering drawings....37
4.8.26.2.5 Diagrams....37
4.8.26.2.5.1 Diagram specifications....37
4.8.26.2.5.2 Types of diagrams....37
4.8.26.2.6 Tools and test equipment illustrations....38
4.8.26.3 Elements of illustrations....38
4.8.26.3.1 Border rules and boxes....38
4.8.26.3.2 Use of the human figure....38
4.8.26.3.3 Credit lines....38
4.8.26.3.4 Callouts....38
4.8.26.3.4.1 Index numbers....38
4.8.26.3.5 Leader lines and arrowheads....39
4.8.26.3.6 Illustration legends....39
4.8.26.3.7 Procedures on illustrations....39
4.8.26.4 Graphic techniques....39
4.8.26.4.1 Figure numbers....39
4.8.26.4.2 Parts information figure numbering....39
4.8.26.4.3 Multisheet numbering....39
4.8.26.4.4 Figure titles....39
4.8.26.4.5 Illustration identification numbers....39
4.8.26.4.6 Portraying signal flow....39
4.8.27 Revisions for IETMs....40
4.8.27.1 Revision symbols for text and tables....40
4.8.27.2 Revision symbols for illustrations....40
4.8.28 Use of color....41

Source: https://assist.dla.mil -- Downloaded: 2016-12-05T17:12Z
Check the source to verify that this is the current version before use.

CONTENTS

PARAGRAPH PAGE

5. DETAILED REQUIREMENTS....41
5.1 Technical content preparation....41
5.2 Preparation of introductory matter and planning information for IETMs....41
5.2.1 Introductory matter <framed.frnt>....41
5.2.1.1 IETM installation data....42
5.2.1.2 CD content frame....42
5.2.1.3 Promulgation letter (MC Only) <promulgation>....42
5.2.1.4 Warning summary....42
5.2.1.4.1 First Aid <first_aid>....42
5.2.1.5 Revision summary frame <revisionsummary>....43
5.2.1.6 Identification information <frntcover>....43
5.2.1.6.1 TM number <tmno>....44
5.2.1.6.2 TM number for joint service IETMs <tminfono>....44
5.2.1.6.3 National Overhaul Standards statement (TM/NMWR/DMWR with NMP Overhaul Standards Only)....44
5.2.1.6.4 Weapon system name <weapon-system>....44
5.2.1.6.5 Reporting errors and recommending improvements statement <reporting>....44
5.2.1.6.6 Availability statement (DMWR/NMWR only) <avail>....46
5.2.1.6.7 Supersedure notice for revisions only <super>....47
5.2.1.6.8 Disclosure notice <disclos>....47
5.2.1.6.9 Distribution statement <dist>....47
5.2.1.6.10 Export control notice warning <export>....47
5.2.1.6.11 Destruction notice <destr>....47
5.2.1.6.12 General purpose notice <general_purpose_notice>....47
5.2.1.6.13 Service nomenclature <servnomen>....47
5.2.1.6.14 TM Publication date <date>....47
5.2.1.6.15 For Army communications security (COMSEC) manuals use....47
5.2.1.7 Table of contents <contents>....48
5.2.1.8 "How To Use This IETM" information <howtouse>....48
5.2.1.8.1 International standardization agreements....48
5.2.2 Rear matter....49
5.2.2.1 Reporting errors and recommending improvements DA Form 2028 <da2028>....49
5.2.2.2 Blank Forms....49
5.2.2.3 Glossary and Index....49
5.2.2.4 Metric conversion table....49

6. NOTES....49
6.1 Intended use....49
6.2 Acquisition requirements....49
6.3 Tailoring guidance....49
6.4 DELETED....49
6.5 Subject term (key word) listing....49

Source: https://assist.dla.mil -- Downloaded: 2016-12-05T17:12Z
Check the source to verify that this is the current version before use.

CONTENTS

PARAGRAPH PAGE

6.6 Change notations....50

A IETM FUNCTIONALITY AND DATA DISPLAY REQUIREMENTS AND CONTENT SELECTION MATRIXES....73

A.1 SCOPE....73
A.1.1 Scope....73

A.2 APPLICABLE DOCUMENTS....73

A.3 DEFINITIONS....73

A.4 GENERAL REQUIREMENTS....77
A.4.1 IETM functionality requirements....77
A.4.2 Physical IETM screen layout....77
A.4.2.1 General inner shell layout....79
A.4.2.2 Guide post....79
A.4.2.3 Guide Post Functions....79
A.4.2.4 Table of Contents (TOC)....80
A.4.2.5 Classification bar....80
A.4.2.6 Navigation panel....80
A.4.2.6.1 Subtitle bar....80
A.4.2.6.2 Main menu bar....80
A.4.2.6.3 Project specific bar....82
A.4.2.7 Main content area....82
A.4.2.8 Status bar....84
A.4.2.9 Title bar....84
A.4.2.10 Screen sizes....84
A.4.3 Style and format on the display....84
A.4.3.1 Text colors/background....84
A.4.3.1.1 Standard text/fonts....85
A.4.3.1.2 Custom developed fonts....85
A.4.3.2 Security markings....85
A.4.3.3 Front and rear matter....86
A.4.3.4 Revisions....87
A.4.3.4.1 Revision markings....87
A.4.4 Hotspots/Links....87
A.4.4.1 Textual hotspot....87
A.4.4.2 Icon hotspot....87
A.4.4.3 Links to text....89
A.4.4.4 Links to graphics and tables....89
A.4.4.5 Links to multimedia....89
A.4.4.6 Links in graphics....89
A.4.4.7 Hotspots in tables....90

Source: https://assist.dla.mil -- Downloaded: 2016-12-05T17:12Z
Check the source to verify that this is the current version before use.

CONTENTS

PARAGRAPH PAGE

A.4.5 User interface 91
A.4.5.1 Session control 91
A.4.5.2 Bookmarks 92
A.4.5.3 Annotations 92
A.4.5.4 Redline (Review only) 92
A.4.5.4.1 Browsing 93
A.4.5.5 Dialog boxes 93
A.4.5.5.1 Dialog box types 93
A.4.5.5.1.1 Message dialog box 94
A.4.5.5.1.2 Fill-in dialog box 94
A.4.5.5.1.2.1 Number-range 95
A.4.5.5.1.3 Menu dialog box 96
A.4.5.5.1.4 Multiple-choice dialog box 97
A.4.5.5.1.5 Composite dialog box 97
A.4.5.5.2 Dialog box title 98
A.4.5.5.3 Dialog push buttons 98
A.4.5.5.3.1 Common function push buttons 98
A.4.5.5.4 Dialog cursor movement 98
A.4.5.6 Screen stacking 98
A.4.5.7 Response time 99
A.4.5.8 Audio control 99
A.4.5.9 Graphical navigation 100
A.4.5.10 Additional navigation 101

A.5 DETAILED REQUIREMENTS 101
A.5.1 IETM functionality requirements 101
A.5.2 Functionality matrix 101
A.5.2.1 Strategy pricing 102
A.5.2.2 Functionality matrix column definitions 102
A.5.2.2.1 Complexity factor 102
A.5.2.2.1.1 Linear 102
A.5.2.2.1.2 Non-Linear 102
A.5.2.2.2 Category 102
A.5.2.2.3 Functionality 103
A.5.2.2.4 Reqmt 103
A.5.2.2.5 Paragraph reference 103
A.5.2.3 Functionality definitions 109
A.5.2.3.1 Access (Ac) category 109
A.5.2.3.1.1 Suspend and restart 109
A.5.2.3.1.2 Login 109
A.5.2.3.2 Annotation (An) category 109
A.5.2.3.2.1 Global data annotation 109
A.5.2.3.2.2 Local data annotation 109
A.5.2.3.2.3 Personal annotation 110

Source: https://assist.dla.mil -- Downloaded: 2016-12-05T17:12Z
Check the source to verify that this is the current version before use.

CONTENTS

PARAGRAPH PAGE

A.5.2.3.2.4 Redlining graphics 110
A.5.2.3.2.5 Redlining text 110
A.5.2.3.3 Delivery and distribution (DD) category 110
A.5.2.3.3.1 CD-ROM 110
A.5.2.3.3.2 DVD 110
A.5.2.3.3.3 Network distribution 111
A.5.2.3.4 Diagnostics and prognostics (DP) category 111
A.5.2.3.4.1 Diagnostics - User determined entry to IETM 111
A.5.2.3.4.2 Diagnostics - Software driven entry to IETM 111
A.5.2.3.4.3 Dynamic diagnostics 111
A.5.2.3.4.4 Prognostics 111
A.5.2.3.4.5 System simulation 111
A.5.2.3.4.6 Wire/Fluid system tracing 112
A.5.2.3.5 External processes (E) category 113
A.5.2.3.5.1 Deficiency report (User feedback) (Required) 113
A.5.2.3.5.2 Knowledge management 113
A.5.2.3.5.3 Maintenance data collection 113
A.5.2.3.5.4 Operator debriefing 113
A.5.2.3.5.5 Parts Ordering (Required) 113
A.5.2.3.5.6 Resource Scheduling 114
A.5.2.3.5.7 Supporting technical data 114
A.5.2.3.6 Graphics (G) category 114
A.5.2.3.6.1 3 D modeling 114
A.5.2.3.6.2 Assembly/Disassembly 114
A.5.2.3.6.3 Locator graphics 115
A.5.2.3.6.4 Pan, zoom, expand, rotate, magnify 116
A.5.2.3.7 Linking (L) category 116
A.5.2.3.7.1 Hot reference 116
A.5.2.3.7.2 Hotspotting 116
A.5.2.3.7.3 Internal References 117
A.5.2.3.7.4 Link to separate parts data 117
A.5.2.3.7.5 Table of contents (Required) 117
A.5.2.3.7.5.1 Authentication block <authent> 118
A.5.2.3.7.5.2 Feedback. 118
A.5.2.3.8 Navigation and tracking (N) category 118
A.5.2.3.8.1 Audit trail 118
A.5.2.3.8.2 Dialog-driven interaction 120
A.5.2.3.8.3 Exit (Required) 120
A.5.2.3.8.4 Filter by configuration 120
A.5.2.3.8.5 Filter by model series 120
A.5.2.3.8.6 Filter by modification 120
A.5.2.3.8.7 Filter by Skill/Maintenance level 121
A.5.2.3.8.8 Filter by unique identification code 121
A.5.2.3.8.9 Graphical navigation 121

Source: https://assist.dla.mil -- Downloaded: 2016-12-05T17:12Z
Check the source to verify that this is the current version before use.

CONTENTS

PARAGRAPH PAGE

A.5.2.3.8.10 History of traversed links (Required) 122
A.5.2.3.8.11 Next and previous (Required) 122
A.5.2.3.8.12 Forward and back 122
A.5.2.3.8.13.1 Search - context 122
A.5.2.3.8.13.2 Search - Full text (Required) 123
A.5.2.3.8.13.3 Search - User defined boolean 123
A.5.2.3.8.13.4 Search - Across multiple databases/files 123
A.5.2.3.8.13.5 Search - Key word 123
A.5.2.3.8.14 Simultaneous display of multiple content elements 123
A.5.2.3.8.15 System/Subsystem navigation 124
A.5.2.3.8.16 Tear off window capability 124
A.5.2.3.8.17 User creation of bookmarks 125
A.5.2.3.8.18 Voice-Activated commands 125
A.5.2.3.9 Printing (P) category 125
A.5.2.3.9.1 Work package specific printing 125
A.5.2.3.9.2 Fully formatted/book version 126
A.5.2.3.9.3 Print linked data 126
A.5.2.3.9.4 Print screen (Required) 126
A.5.2.3.9.5 Print Frame 126
A.5.2.3.10 Special content (S) category 126
A.5.2.3.10.1 Alerts 126
A.5.2.3.10.2 Animation 126
A.5.2.3.10.3 Audio 126
A.5.2.3.10.4 Help 126
A.5.2.3.10.4.1 Content sensitive help (technical data help)(Required) 126
A.5.2.3.10.4.2 Context sensitive help (viewer help)(Required) 127
A.5.2.3.10.5 Motion video 127
A.5.2.3.10.6 Digital photos 127
A.5.2.3.10.7 User training 127
A.5.2.3.10.8 Browsing 127
A.5.2.3.10.9 Selectable Text 128
A.5.2.3.10.10 Selectable Graphics 128
A.5.2.3.10.11 Guide post 128
A.5.2.3.11 Updates (U) category 129
A.5.2.3.11.1 Active change indications and markings (Required) 129
A.5.2.3.11.2 Block cycle with urgent changes 129
A.5.2.3.11.3 Full revision 129
A.5.2.3.11.4 Near real time updates 129
A.5.2.3.12 User operation mode (Uo) category 129
A.5.2.3.12.1 Network connectivity 130
A.5.2.3.12.1.1 Network connectivity - context filtering 130
A.5.2.3.12.1.2 Network connectivity - update capability (partial) 130
A.5.2.3.12.1.3 Network connectivity mode - update capability (full revision) 130
A.5.2.3.12.2 Stand alone mode 130

Source: https://assist.dla.mil -- Downloaded: 2016-12-05T17:12Z
Check the source to verify that this is the current version before use.

CONTENTS

PARAGRAPH PAGE

A.5.2.3.12.2.1 Stand alone mode - context filtering 130
A.5.2.3.12.2.2 Stand alone mode - update capability (full revision) 130
A.5.2.3.12.2.3 Stand alone mode - update capability (partial) 130
A.5.2.3.12.3 Web browser viewable 130
A.5.3 IETM tailoring requirements 130
A.5.3.1 Publication Titles 131
A.5.3.2 Technical content tables 131
A.5.3.3 Additional requirements 132
A.5.3.3.1 CD-ROM 132
A.5.3.3.2 Schematics and wiring diagrams 132
A.5.3.4 Intended use 132
A.5.3.5 Acquisition requirements 132

B GENERAL INFORMATION, EQUIPMENT DESCRIPTION, AND THEORY OF OPERATION 155

B.1 SCOPE 155
B.1.1 Scope 155

B.2 APPLICABLE DOCUMENTS 155

B.3 DEFINITIONS 155

B.4 GENERAL REQUIREMENTS 155
B.4.1 General 155
B.4.2 Maintenance level applicability 155
B.4.3 Preparation of digital data for electronic delivery 155
B.4.4 Use of the DTD/XSLs 155
B.4.5 Content structure and format 156
B.4.6 Style and format 156
B.4.7 IETM functionality 156
B.4.8 Work package development 156
B.4.9 Safety devices and interlocks 156
B.4.10 Electrostatic discharge (ESD) sensitive parts 156
B.4.11 Nuclear hardness 156
B.4.12 Selective application and tailoring 156

B.5 DETAILED REQUIREMENTS 157
B.5.1 Preparation of general information, equipment description, and theory of operation 157
B.5.1.1 Required general information, equipment description, and theory of operation data work packages 157
B.5.2 General information work package <ginfowp> 157
B.5.2.1 Work package identification information <wpidinfo> 157
B.5.2.2 Initial setup information <wpinfo> 157

Source: https://assist.dla.mil -- Downloaded: 2016-12-05T17:12Z
Check the source to verify that this is the current version before use.

CONTENTS

PARAGRAPH PAGE

B.5.2.3 Scope <scope> 157
B.5.2.4 Maintenance forms, records, and reports <mfrr> 158
B.5.2.5 Reporting equipment improvement recommendations <eir> 159
B.5.2.5.1 (MC) Additional Reporting equipment improvement recommendations Marine Corps TMs 159
B.5.2.6 Hand receipt (HR) manuals (Field or below) <handreceipt> 159
B.5.2.7 Corrosion prevention and control <cpcdata> 160
B.5.2.8 Ozone depleting substances (ODS) <odsdata> 160
B.5.2.9 Destruction of Army materiel to prevent enemy use <destructmat> 160
B.5.2.10 Preparation for storage or shipment <pssref> 160
B.5.2.11 Warranty information <wrntyref> 160
B.5.2.12 Nomenclature cross-reference list <nomenreflist> 161
B.5.2.13 List of abbreviations/acronyms <loa> 161
B.5.2.14 Quality Assurance (QA) (DMWR/NMWR and aviation only) <qainfo> 161
B.5.2.15 Quality of material (-20 and above only) <qual.mat.info> 161
B.5.2.16 Safety, care, and handling <sftyinfo> 161
B.5.2.17 Nuclear hardness <hcp> 162
B.5.2.18 Calibration <calref> 162
B.5.2.19 Engineering Change Proposals (ECPs) (DMWR/NMWR only) <ecp> 162
B.5.2.20 Modification list (DMWR/NMWR only) <modification> 163
B.5.2.21 Deviations and exceptions (DMWR/NMWR only) <deviation> 163
B.5.2.22 Mobilization requirements (DMWR/NMWR only) <mobreq> 163
B.5.2.23 Flight safety critical aircraft parts (FSCAP) (aircraft only) <fscapreq> 163
B.5.2.24 Cost considerations (DMWR/NMWR only) <cost> 164
B.5.2.25 Supporting information for repair parts, special tools, TMDE, and support equipment (Field or above only) <supdata> 164
B.5.2.25.1 Common tools and equipment 164
B.5.2.25.2 Special tools, TMDE, and support equipment 164
B.5.2.25.3 Repair parts 164
B.5.2.26 Copyright credit line <copyrt> 165
B.5.2.26.1 Proprietary names 165
B.5.2.26.2 Advertising 165
B.5.3 Equipment description and data work package <descwp> 165
B.5.3.1 Work package identification information <wpidinfo> 165
B.5.3.2 Initial setup information <wpinfo> 165
B.5.3.3 Equipment characteristics, capabilities, and features <eqpinfo> 165
B.5.3.4 Location and description of major components (Except Conventional Ammunition and Chemical Manuals) <locdesc> 166
B.5.3.5 Differences between models <eqpdiff> 166
B.5.3.6 Equipment data <eqpdata> 166
B.5.4 Theory of operation work package <thrywp> 167
B.5.4.1 Work package identification information <wpidinfo> 167
B.5.4.2 Initial setup information <wpinfo> 167
B.5.4.3 Theory presentation 167

Source: https://assist.dla.mil -- Downloaded: 2016-12-05T17:12Z
Check the source to verify that this is the current version before use.

CONTENTS

PARAGRAPH PAGE

B.5.5 General information work package (Preventive Maintenance Services Manual only) <pms-ginfowp> 168
B.5.5.1 Work package identification information <wpidinfo> 168
B.5.5.2 Initial setup information <wpinfo> 168
B.5.5.3 Maintenance activities <scope> 168
B.5.5.4 General information <geninfo> 169
B.5.6 General information work package (Phased Maintenance Inspection Manual Only) <pm-ginfowp> 171
B.5.6.1 Work package identification information <wpidinfo> 171
B.5.6.2 Initial setup information <wpinfo> 171
B.5.6.3 General information <geninfo> 171
B.5.6.3.1 Phased schedule 171
B.5.6.3.2 Additional general information 172

B.6 NOTES 175

C OPERATOR INSTRUCTIONS 177

C.1 SCOPE 177
C.1.1 Scope 177

C.2 APPLICABLE DOCUMENTS 177

C.3 DEFINITIONS 177

C.4 GENERAL REQUIREMENTS 177
C.4.1 General 177
C.4.2 Maintenance level applicability 177
C.4.3 Preparation of digital data for electronic delivery 177
C.4.4 Use of the DTD/XSLs 178
C.4.5 Content structure and format 178
C.4.6 Style and format 178
C.4.7 IETM functionality 178
C.4.8 Work package development 178
C.4.9 Safety devices and interlocks 178
C.4.10 Electrostatic discharge (ESD) sensitive parts 178
C.4.11 Nuclear hardness 178
C.4.12 Selective application and tailoring 179

C.5 DETAILED REQUIREMENTS 179
C.5.1 Preparation of operator instructions 179
C.5.2 Operator instructions work packages 179
C.5.2.1 Work package content 179
C.5.2.2 Types of operator instructions work packages 179
C.5.2.3 Description and use of controls and indicators work package <ctrlindwp> ..179

Source: https://assist.dla.mil -- Downloaded: 2016-12-05T17:12Z
Check the source to verify that this is the current version before use.

CONTENTS

PARAGRAPH PAGE

C.5.2.3.1 Work package identification information <wpidinfo> 180
C.5.2.3.2 Initial setup information <wpinfo> 180
C.5.2.3.3 Controls and indicators description tabular option 180
C.5.2.3.4 Controls and indicators description narrative option 180
C.5.2.4 Operation under usual conditions work package <opusualwp> 180
C.5.2.4.1 Work package identification information <wpidinfo> 180
C.5.2.4.2 Initial setup information <wpinfo> 180
C.5.2.4.3 Security measures for electronic data <secref> 180
C.5.2.4.4 Siting requirements <site> 181
C.5.2.4.5 Shelter requirements <shelter> 181
C.5.2.4.6 Assembly and preparation for use <prepforuse> 181
C.5.2.4.7 Initial adjustments, before use, and self-test <initial> 181
C.5.2.4.8 Operating procedures <oper> 182
C.5.2.4.8.1 Operating procedure considerations 182
C.5.2.4.8.2 Decals and instruction plates <instructplt> 183
C.5.2.4.9 Operating auxiliary equipment <operaux> 183
C.5.2.4.10 Preparation for movement <prepmove> 183
C.5.2.5 Operation under unusual conditions work package <opunuwp> 183
C.5.2.5.1 Work package identification information <wpidinfo> 183
C.5.2.5.2 Initial setup information <wpinfo> 183
C.5.2.5.3 Operations under unusual tasks <opunutsk> 183
C.5.2.5.3.1 Security measures for electronic data <secref> 183
C.5.2.5.3.2 Unusual environment/weather <unusualenv> 183
C.5.2.5.3.3 Fording and swimming <fording> 184
C.5.2.5.3.4 Interim Nuclear, Biological, and Chemical (NBC) decontamination procedures <decon> 184
C.5.2.5.3.5 Jamming and Electronic Countermeasures (ECM) procedures <ecm> 184
C.5.2.5.3.6 Degraded Operation procedures <degraded> 184
C.5.2.6 Emergency work package <emergencywp> 184
C.5.2.6.1 Work package identification information <wpidinfo> 184
C.5.2.6.2 Initial setup information <wpinfo> 184
C.5.2.6.3 Emergency operation <emergency> 184
C.5.2.6.4 Emergency shutdown <emergency> 184
C.5.2.7 Stowage and decal/data plate guide work package <stowagewp> 184
C.5.2.7.1 Work package identification information <wpidinfo> 184
C.5.2.7.2 Initial setup information <wpinfo> 184
C.5.2.7.3 Introduction <intro> 184
C.5.2.7.4 Stowage guide <stowinfo> 184
C.5.2.7.5 Decal/data plate guide <decalinfo> 184
C.5.2.8 On-vehicle equipment loading plan work package <eqploadwp> 185
C.5.2.8.1 Work package identification information <wpidinfo> 185
C.5.2.8.2 Initial setup information <wpinfo> 185
C.5.2.8.3 Introduction <intro> 185
C.5.2.8.4 Illustrated loading plan list(s) <loaddesc> 185

Source: https://assist.dla.mil -- Downloaded: 2016-12-05T17:12Z
Check the source to verify that this is the current version before use.

CONTENTS

PARAGRAPH PAGE

C.6 NOTES 185

D TROUBLESHOOTING PROCEDURES 187

D.1 SCOPE 187
D.1.1 Scope.....187

D.2 APPLICABLE DOCUMENTS.....187

D.3 DEFINITIONS.....187

D.4 GENERAL REQUIREMENTS.....187
D.4.1 General.....187
D.4.2 Types of troubleshooting models.....187
D.4.2.1 Simple diagnostic mode explanation 187
D.4.2.2 Complex diagnostic mode explanation.....187
D.4.2.2.1 State table explanation 187
D.4.2.2.2 State table input.....188
D.4.2.2.3 State table limits.....188
D.4.2.2.4 Minimum state table requirements.....188
D.4.2.2.5 Additional state table options.....188
D.4.3 Development of troubleshooting instructions.....188
D.4.4 Maintenance level applicability 189
D.4.5 Preparation of digital data for electronic delivery 189
D.4.6 Use of the DTD/XSLs.....189
D.4.7 Content structure and format 189
D.4.8 Style and format.....189
D.4.9 IETM functionality 189
D.4.10 Work package development.....189
D.4.11 Safety devices and interlocks.....189
D.4.12 Electrostatic discharge (ESD) sensitive parts 189
D.4.13 Nuclear hardness.....190
D.4.14 Selective application and tailoring.....190

D.5 DETAILED REQUIREMENTS.....190
D.5.1 Testing and troubleshooting philosophy.....190
D.5.2 Information to be provided 190
D.5.2.1 Methods of testing and troubleshooting.....191
D.5.2.1.1 Manual (nonautomatic) troubleshooting.....191
D.5.2.1.2 Semi-automatic or automatic testing and troubleshooting.....191
D.5.2.1.3 Testing and troubleshooting using built-in-test equipment 191
D.5.2.1.4 Sensor derived failures.....191
D.5.2.1.5 Failure interpretation.....191
D.5.2.2 Types of testing and troubleshooting information.....191

Source: https://assist.dla.mil -- Downloaded: 2016-12-05T17:12Z
Check the source to verify that this is the current version before use.

CONTENTS

PARAGRAPH PAGE

D.5.2.2.1 Fault reporting/fault isolation information....191
D.5.2.2.2 Integrated system testing and troubleshooting....192
D.5.2.2.2.1 Integrated systems having self-test or built-in test capability....192
D.5.2.2.2.2 Integrated systems requiring the use of system peculiar test sets....192
D.5.2.2.2.3 Integrated systems requiring the use of common test equipment....192
D.5.3 Troubleshooting procedures content....192
D.5.4 Types of testing and troubleshooting....193
D.5.4.1 Aviation testing and troubleshooting category <troubleaviationcategory>...193
D.5.4.2 Standard testing and troubleshooting category <troublecategory> 194
D.5.4.3 DMWR/NMWR testing and troubleshooting category (depot only) <troubledmwrnmwrcategory> 194
D.5.4.4 Master index testing and troubleshooting category <masterindexcategory>....194
D.5.5 Testing and troubleshooting work packages....194
D.5.5.1 Work package content....194
D.5.5.2 Types of testing and troubleshooting work packages....195
D.5.5.3 Introduction work package (Aircraft Troubleshooting TMs only) <tsintrowp>....195
D.5.5.3.1 Work package identification information <wpidinfo> 195
D.5.5.3.2 Initial setup information <wpinfo>....195
D.5.5.4 Technical description work packages <techdescwp> (Aircraft Troubleshooting Manuals only)....195
D.5.5.4.1 Work package identification information <wpidinfo> 195
D.5.5.4.2 Initial setup information <wpinfo>....195
D.5.5.4.3 Equipment description and data <descproc> 195
D.5.5.4.4 Controls and indicators <ctrlindproc> 195
D.5.5.4.5 Theory of operation <thryproc> 195
D.5.5.5 Troubleshooting index work package <tsindxwp>....195
D.5.5.5.1 Work package identification information <wpidinfo> 196
D.5.5.5.2 Initial setup information <wpinfo>....196
D.5.5.5.3 Malfunction/symptom index <tsindx.symptom>/<tsindx.messageword> 196
D.5.5.5.4 Master malfunction/symptom index <tsindx.symptom> 196
D.5.5.5.5 System/subsystem index <tsindx.system>....196
D.5.5.6 Preshop analysis work package (DMWR/NMWR only) <pshopanalwp> 196
D.5.5.6.1 Work package identification information <wpidinfo> 196
D.5.5.6.2 Initial setup information <wpinfo>....196
D.5.5.6.3 Scope <scope> 196
D.5.5.6.4 Preparation Procedures <proc>....197
D.5.5.6.5 Preshop analysis procedures <pshopanal> 197
D.5.5.7 Component checklist work package (DMWR/NMWR only) <compchklistwp>....198
D.5.5.7.1 Work package identification information <wpidinfo> 198
D.5.5.7.2 Initial setup information <wpinfo>....198
D.5.5.7.3 Introduction <intro>....198

Source: https://assist.dla.mil -- Downloaded: 2016-12-05T17:12Z
Check the source to verify that this is the current version before use.

CONTENTS

PARAGRAPH PAGE

D.5.5.7.4 Component checklist <compchklist>....198
D.5.5.8 Operational checkout and troubleshooting procedures work packages....198
D.5.5.8.1 Operational checkout and troubleshooting procedures content....199
D.5.5.8.2 Operational checkout and troubleshooting procedure work package development....199
D.5.5.8.3 Operational checkout work package <opcheckwp>....199
D.5.5.8.3.1 Work package identification information <wpidinfo>....199
D.5.5.8.3.2 Initial setup information <wpinfo>....199
D.5.5.8.3.3 Introduction <intro>....199
D.5.5.8.3.4 General procedures and precautions <proc>....200
D.5.5.8.3.5 Pretest setup procedures <hookup>....200
D.5.5.8.3.6 Operational checkout procedures <opcheckproc>....200
D.5.5.8.3.7 Post-operational shutdown procedures <disconnect>....200
D.5.5.8.4 Troubleshooting work package <tswp>....200
D.5.5.8.4.1 Work package identification information <wpidinfo>....200
D.5.5.8.4.2 Initial setup information <wpinfo>....201
D.5.5.8.4.3 Introduction <intro>....201
D.5.5.8.4.4 General procedures and precautions <proc>....201
D.5.5.8.4.5 Pretest setup procedures <hookup>....201
D.5.5.8.4.6 Troubleshooting procedures <tsproc>....201
D.5.5.8.4.7 Post-operational shutdown procedures <disconnect>....202
D.5.5.8.5 Combined operational checkout and troubleshooting work package <opcheck-tswp>....202
D.5.5.8.5.1 Work package identification information <wpidinfo>....202
D.5.5.8.5.2 Initial setup information <wpinfo>....202
D.5.5.8.5.3 Introduction <intro>....202
D.5.5.8.5.4 General procedures and precautions <proc>....202
D.5.5.8.5.5 Pretest setup procedures <hookup>....202
D.5.5.8.5.6 Operational checkout and troubleshooting procedures....202
D.5.5.8.5.7 Post-operational shutdown procedures <disconnect>....203
D.5.5.8.6 Integrated system troubleshooting procedures work packages....203
D.5.6 Diagnostic work package usage <diagnosticwp>....203
D.5.6.1 Diagnostic work package <diagnosticwp> content....203
D.5.6.1.1 Simple tests <testwithoutstate>....204
D.5.6.1.1.1 Test procedure <proc>....204
D.5.6.1.1.2 Indication prompt <simple>/<multioption>....204
D.5.6.1.1.3 Test results <resultwithoutstate>....204
D.5.6.1.2 Complex tests <testwithstate>....204
D.5.6.1.2.1 Test evaluations <evaluate>....205
D.5.6.1.2.2 Test result actions <resultwithstate>....205
D.5.6.1.3 Conditional tests using the state table <testwithstate-alt>....206
D.5.6.2 Test information source....206

Source: https://assist.dla.mil -- Downloaded: 2016-12-05T17:12Z
Check the source to verify that this is the current version before use.

CONTENTS

PARAGRAPH PAGE

D.6 NOTES 208

E MAINTENANCE INSTRUCTIONS 217

E.1 SCOPE 217
E.1.1 Scope 217

E.2 APPLICABLE DOCUMENTS 217

E.3 DEFINITIONS 217

E.4 GENERAL REQUIREMENTS 217
E.4.1 General 217
E.4.2 Development of maintenance instructions 217
E.4.3 Maintenance level applicability 217
E.4.4 Depot maintenance work requirements (DMWR) and national maintenance work requirements (NMWR) 217
E.4.5 Preparation of digital data for electronic delivery 218
E.4.6 Use of the DTD/XSLs 218
E.4.7 Content structure and format 218
E.4.8 Style and format 218
E.4.9 IETM functionality 218
E.4.10 Work package development 218
E.4.11 Safety devices and interlocks 218
E.4.12 Electrostatic discharge (ESD) sensitive parts 218
E.4.13 Nuclear hardness 219
E.4.14 Selective application and tailoring 219

E.5 DETAILED REQUIREMENTS 219
E.5.1 Preparation of maintenance instructions 219
E.5.2 Types of maintenance 219
E.5.2.1 Preventive Maintenance Checks and Services (PMCS) <pmcscategory> 219
E.5.2.2 Weapon system/equipment, component, assembly, subassembly, and software maintenance with required PMCS <maintenancepmcscategory> ..219
E.5.2.3 Weapon system/equipment, component, assembly, subassembly, and software maintenance without PMCS (Except for aircraft TMs, DMWR and NMWR) <maintenancecategory> 220
E.5.2.4 Depot weapon system/equipment, component, assembly, and subassembly maintenance <depotcategory> 220
E.5.2.5 Aircraft maintenance (aircraft only) <aviationcategory> 221
E.5.2.6 Auxiliary equipment maintenance <auxiliarycategory> 221
E.5.2.7 Ammunition maintenance <ammunitioncategory> 221

Source: https://assist.dla.mil -- Downloaded: 2016-12-05T17:12Z
Check the source to verify that this is the current version before use.

CONTENTS

PARAGRAPH PAGE

E.5.2.8 Test and inspection maintenance (Conventional and chemical ammunition only) <testinspectioncategory> 222
E.5.2.9 Shipment/movement and storage maintenance (Conventional and chemical ammunition only) <shipmentmovementstoragecategory> 222
E.5.2.10 Ammunition marking maintenance (Conventional and chemical ammunition only) <ammomarkingcategory> 222
E.5.2.11 Preventive maintenance services (Aircraft preventive maintenance services only) <pmscategory> 222
E.5.2.12 Phased maintenance inspections (aircraft phased maintenance inspection only) <checklistcategory> 222
E.5.3 Maintenance work packages 222
E.5.3.1 Work package content 222
E.5.3.2 Service upon receipt work package (service/AMC only) <surwp> 222
E.5.3.2.1 Work package identification information <wpidinfo> 222
E.5.3.2.2 Initial setup information <wpinfo> 222
E.5.3.2.3 Service upon receipt tasks <surtsk> 222
E.5.3.2.3.1 Siting <siting> 223
E.5.3.2.3.2 Shelter requirements <shltr> 223
E.5.3.2.3.3 Service upon receipt of materiel <surmat 223
E.5.3.2.3.4 Installation instructions <install> 224
E.5.3.2.3.4.1 Assembly of equipment 225
E.5.3.2.3.4.2 Installation of the equipment 225
E.5.3.2.3.4.3 Special applications 226
E.5.3.2.3.4.4 Van and shelter installations 226
E.5.3.2.3.5 Preliminary servicing of equipment <preserv> 226
E.5.3.2.3.6 Preliminary checks and adjustment of equipment <prechkadj> 226
E.5.3.2.3.7 Preliminary calibration of equipment <precal> 227
E.5.3.2.3.8 Circuit alignment <calign> 227
E.5.3.2.3.9 Ammunition service upon receipt tasks 228
E.5.3.2.3.9.1 Ammunition markings <ammo.markings> 228
E.5.3.2.3.9.2 Classification of defects <ammo.defect> 228
E.5.3.2.3.9.3 Handling <ammo.handling> 228
E.5.3.2.3.9.4 Procedures needed to activate ammunition, mine, etc. <arm> 228
E.5.3.2.3.10 Other service upon receipt task <other.surtsk> 228
E.5.3.2.3.11 Follow-on maintenance <followon.maintsk> 228
E.5.3.3 Equipment / user fitting instructions work package (Field or above only) <perseqpwp> 228
E.5.3.4 Preventive maintenance checks and services (PMCS), including lubrication instructions (Not required for aircraft TMs, DMWR and NMWR) 229
E.5.3.4.1 PMCS introduction work package <pmcsintrowp> 229
E.5.3.4.1.1 Work package identification information <wpidinfo> 229
E.5.3.4.1.2 Initial setup information <wpinfo> 229
E.5.3.4.1.3 PMCS data 229

Source: https://assist.dla.mil -- Downloaded: 2016-12-05T17:12Z
Check the source to verify that this is the current version before use.

CONTENTS

PARAGRAPH PAGE

E.5.3.4.2 PMCS work package <pmcswp> 231
E.5.3.4.2.1 Work package identification information <wpidinfo> 231
E.5.3.4.2.2 Initial setup information <wpinfo> 231
E.5.3.4.3 PMCS procedures 231
E.5.3.4.3.1 PMCS data preparation <pmcstable> 231
E.5.3.4.3.2 Mandatory replacement parts <mrplpart> 233
E.5.3.4.4 Preventive Maintenance Checklist (PMC) (operator only) 234
E.5.3.5 Maintenance work packages (Not required for aircraft PM and PMS manuals only) <maintwp> 234
E.5.3.5.1 Work package identification information <wpidinfo> 235
E.5.3.5.2 Initial setup information <wpinfo> 235
E.5.3.5.3 Maintenance tasks <maintsk> 235
E.5.3.5.3.1 Maintenance task requirements 236
E.5.3.5.3.2 Assembly and preparation for use (aviation only) <prepforuse> 237
E.5.3.5.3.3 Servicing <service> 238
E.5.3.5.3.4 Ground handling <groundtsk> 238
E.5.3.5.3.5 Inspection of installed items <inspinstitm> 238
E.5.3.5.3.6 Removal <remove> 239
E.5.3.5.3.7 Disassembly <disassem> 239
E.5.3.5.3.8 Cleaning <clean> 239
E.5.3.5.3.9 Inspection-acceptance and rejection criteria <acptrejinsp> 240
E.5.3.5.3.10 Nondestructive Testing Inspection (NDTI) <ndti> 240
E.5.3.5.3.11 Repair or replacement <repair-rplc> 240
E.5.3.5.3.12 Alignment <align> 240
E.5.3.5.3.13 Painting <paint> 241
E.5.3.5.3.14 Lubrication <lube> 241
E.5.3.5.3.15 Assembly <assem> 241
E.5.3.5.3.16 Test and inspection <test-inspect> 241
E.5.3.5.3.16.1 Inspection and test of conventional and chemical ammunition or components containing radioactive materials (Field, Below Depot Sustainment, and ASB only) <test-inspect> 242
E.5.3.5.3.16.2 Pre-embarkation inspection of material in units alerted for overseas movement <test-inspect> 243
E.5.3.5.3.17 Installation <install> 243
E.5.3.5.3.18 Adjustment <adjust> 243
E.5.3.5.3.19 Calibration <calibration> 243
E.5.3.5.3.20 Radio interference suppression <ris> 243
E.5.3.5.3.21 Placing in service <pis> 244
E.5.3.5.3.22 Testing <test-pass> 244
E.5.3.5.3.23 Preservation, packaging, and marking (DMWR/NMWR only) <ppm> 245
E.5.3.5.3.24 Overhaul and retirement schedule (aircraft only) <orsch> 247
E.5.3.5.3.25 Preparation for storage or shipment <pss> 248
E.5.3.5.3.26 Classification of defects <ammo.defect> 248
E.5.3.5.3.27 Handling ammunition <ammo.handling> 248

Source: https://assist.dla.mil -- Downloaded: 2016-12-05T17:12Z
Check the source to verify that this is the current version before use.

CONTENTS

PARAGRAPH PAGE

E.5.3.5.3.28 Ammunition markings <ammo.markings> 248
E.5.3.5.3.29 Procedures needed to activate ammunition, mine, etc. <arm> 248
E.5.3.5.3.30 Additional maintenance task <other.maintsk> 249
E.5.3.5.3.31 Follow-on maintenance task <followon.maintsk> 249
E.5.3.6 General maintenance work package <maintwp> 249
E.5.3.6.1 Work package identification information <wpidinfo> 249
E.5.3.6.2 Initial setup information <wpinfo> 249
E.5.3.6.3 Maintenance tasks <maintsk> 249
E.5.3.7 Lubrication instructions work package <lubewp> 249
E.5.3.7.1 Work package identification information <wpidinfo> 249
E.5.3.7.2 Initial setup information <wpinfo> 249
E.5.3.7.3 Lubrication instructions 249
E.5.3.7.4 Lubrication charts 250
E.5.3.8 DMWR/NMWR specific maintenance work packages 250
E.5.3.8.1 Facilities work package (DMWR/NMWR only) <facilwp> 250
E.5.3.8.2 Overhaul inspection procedures (OIP) work package (DMWRs/NMWRs only) <oipwp> 250
E.5.3.8.2.1 Work package identification information <wpidinfo> 250
E.5.3.8.2.2 Initial setup information <wpinfo> 250
E.5.3.8.2.3 Overhaul Inspection Procedures (OIP) 251
E.5.3.8.3 Depot mobilization requirements work package (DMWR/NMWR only) <mobilwp> 251
E.5.3.8.3.1 Work package identification information <wpidinfo> 251
E.5.3.8.3.2 Initial setup information <wpinfo> 251
E.5.3.8.3.3 Introduction for depot mobilization requirements work package <intro> 251
E.5.3.8.3.4 Mobilization requirements <mobilreq> 251
E.5.3.8.4 QA requirements work package (DMWR/NMWR only) <qawp> 251
E.5.3.8.4.1 Work package identification information <wpidinfo> 252
E.5.3.8.4.2 Initial setup information <wpinfo> 252
E.5.3.8.4.3 Statement of responsibility <responsibility> 252
E.5.3.8.4.4 Definitions <definitions> 252
E.5.3.8.4.5 Special requirements for inspection tools and equipment <specialreq> 252
E.5.3.8.4.6 Certification requirements <certreq> 252
E.5.3.8.4.7 Quality program <quality-program> 252
E.5.3.8.4.8 In-process inspections <inprocess> 252
E.5.3.8.4.9 Acceptance inspections <acceptance> 252
E.5.3.8.4.10 First article inspection <first> 253
E.5.3.9 Illustrated list of manufactured items work package (Field level or above only) <manuwp> 253
E.5.3.9.1 Illustrated list of manufactured items introduction work package <intro> 253
E.5.3.9.1.1 Work package identification information <wpidinfo> 253
E.5.3.9.1.2 Initial setup information <wpinfo> 253
E.5.3.9.1.3 Introduction for illustrated list of manufactured items work package <intro> 253

Source: https://assist.dla.mil -- Downloaded: 2016-12-05T17:12Z
Check the source to verify that this is the current version before use.

CONTENTS

PARAGRAPH PAGE

E.5.3.9.1.4 Index of manufactured items <manuindx> 254
E.5.3.9.2 Manufacturing procedures work package <manufacprocwp> 254
E.5.3.9.2.1 Work package identification information <wpid> 254
E.5.3.9.2.2 Initial setup information <wpinfo> 254
E.5.3.9.2.3 Illustrations of manufactured items <graphic> 254
E.5.3.10 Torque limits work package (Field level or above only) <torquewp> 254
E.5.3.10.1 Work package identification information <wpidinfo> 254
E.5.3.10.2 Initial setup information <wpinfo> 254
E.5.3.10.3 Introduction <intro> 254
E.5.3.10.4 Torque instructions <torqueval> 254
E.5.3.11 Wiring diagrams work package (Field or above only) <wiringwp> 255
E.5.3.11.1 Work package identification information <wpidinfo> 255
E.5.3.11.2 Initial setup information <wpinfo> 255
E.5.3.11.3 Introduction <intro> 255
E.5.3.11.4 Wire identification <wireid> 255
E.5.3.11.5 Abbreviations <abbrev> 255
E.5.3.11.6 Wiring diagrams <wiringdiag> 255
E.5.3.12 Aircraft specific maintenance work packages 255
E.5.3.12.1 Preventive maintenance inspections work package (aircraft only) <pmiwp> 255
E.5.3.12.1.1 Work package identification information <wpidinfo> 255
E.5.3.12.1.2 Initial setup information <wpinfo> 255
E.5.3.12.1.3 General information and introduction <geninfo> 255
E.5.3.12.1.4 Standards of serviceability 256
E.5.3.12.1.5 Special inspections 256
E.5.3.12.2 Aircraft inventory master guide work package (aircraft only) <inventorywp> 256
E.5.3.12.2.1 Work package identification information <wpidinfo> 256
E.5.3.12.2.2 Initial setup information <wpinfo> 257
E.5.3.12.2.3 Introduction <intro> 257
E.5.3.12.2.4 Security <security> 257
E.5.3.12.2.5 Inventoriable items <inventoriable> 257
E.5.3.12.2.6 Periods of inventory <prdinv> 257
E.5.3.12.3 Storage of aircraft work package (aircraft only) <storagewp> 258
E.5.3.12.3.1 Work package identification information <wpidinfo> 258
E.5.3.12.3.2 Initial setup information <wpinfo> 258
E.5.3.12.3.3 General information for storage of aircraft work package <geninfo> 258
E.5.3.12.3.4 Flyable storage <flyable>, short term storage <short>, and intermediate storage <intermediate> 258
E.5.3.12.4 Weighing and loading work package (ASB only) <wtloadwp> 258
E.5.3.12.4.1 Work package identification information <wpidinfo> 258
E.5.3.12.4.2 Initial setup information <wpinfo> 258
E.5.3.12.4.3 General information <geninfo> 259
E.5.3.12.4.4 Weighing information <formchart> 259

Source: https://assist.dla.mil -- Downloaded: 2016-12-05T17:12Z
Check the source to verify that this is the current version before use.

CONTENTS

PARAGRAPH PAGE

E.5.3.12.4.5 Loading information <weightinst> 259
E.5.3.13 Auxiliary equipment maintenance work package <auxeqpwp> 259
E.5.3.13.1 Work package identification information <wpidinfo> 259
E.5.3.13.2 Initial setup information <wpinfo> 259
E.5.3.13.3 Auxiliary equipment procedures <maintsk>/<proc> 259
E.5.3.14 Ammunition specific work package 260
E.5.3.14.1 Ammunition maintenance work package <ammowp> 260
E.5.3.14.1.1 Work package identification information <wpidinfo> 260
E.5.3.14.1.2 Initial setup information <wpinfo> 260
E.5.3.14.1.3 Care and handling <ammo.handling> 260
E.5.3.14.1.4 Defective <ammo.defect> 260
E.5.3.14.1.5 Cleaning and painting <service> 260
E.5.3.14.2 Ammunition marking information work package (Field or above and only) <ammo.markingwp> 260
E.5.3.14.3 Foreign ammunition (NATO) work package (Field or above only) <natowp> 260
E.5.3.15 Preventive maintenance services inspection work packages (aircraft preventive maintenance services only) <pms-inspecwp> 261
E.5.3.15.1 Work package identification information <wpidinfo> 261
E.5.3.15.2 Initial setup information <wpinfo> 261
E.5.3.15.3 Actuation warning 261
E.5.3.15.4 Mandatory safety-of-flight inspection items 261
E.5.3.15.5 Area diagram 261
E.5.3.15.6 Standard checklist statements 261
E.5.3.16 Phased maintenance inspection work package (aircraft phased maintenance checklist only) <pmi-cklistwp> 262
E.5.3.16.1 Work package identification information <wpidinfo> 262
E.5.3.16.2 Initial setup information <wpinfo> 262
E.5.3.16.3 Inspection area diagrams <figure> 262
E.5.3.16.4 Phased maintenance checklist 262
E.5.3.16.5 DELETED 262
E.5.3.16.6 DELETED 262
E.5.3.16.7 DELETED 262

E.6 NOTES 262

F PARTS INFORMATION 275

F.1 SCOPE 275
F.1.1 Scope 275

Source: https://assist.dla.mil -- Downloaded: 2016-12-05T17:12Z
Check the source to verify that this is the current version before use.

CONTENTS

PARAGRAPH PAGE

F.2 APPLICABLE DOCUMENTS....275

F.3 DEFINITIONS....275

F.4 GENERAL REQUIREMENTS....275
F.4.1 General....275
F.4.2 Preparation of digital data for electronic delivery....275
F.4.3 Use of the DTD/XSLs....275

F.4.4 Content structure and format....275
F.4.5 Style and format....276
F.4.6 IETM functionality....276
F.4.7 Work package development....276
F.4.8 Selective application and tailoring....276

F.5 DETAILED REQUIREMENTS....276
F.5.1 General....276
F.5.2 Parts information development....276
F.5.3 Preparation of parts information....276
F.5.3.1 Parts information <pim>....276
F.5.3.2 Parts information work packages included in a DMWR/NMWR....277
F.5.3.2.1 Depot repair parts....277
F.5.3.3 Repair parts list, special tools, and kits work package layout....277
F.5.3.4 Introduction work package <introwp> (Ground Systems)....277
F.5.3.4.1 Work package identification information <wpidinfo>....277
F.5.3.4.2 Initial setup information....277
F.5.3.4.3 Introduction <intro>....277
F.5.3.4.4 Indexed parts information illustration and legend <figure>....29385
F.5.3.4A Introduction Work Package <introwp> (Aviation Systems)....285
F.5.3.4.1A Work Package Identification Information <wpidinfo>....285
F.5.3.4.2A Initial setup information....285
F.5.3.4.3A Introduction....285
F.5.3.4.4A Indexed parts information illustrations and legends <figure>....285
F.5.3.5 Repair parts list work package <plwp>....293
F.5.3.5.1 Work package identification information <wpidinfo>....293
F.5.3.5.2 Initial setup information....293
F.5.3.5.3 Repair parts list <pi.category>....293
F.5.3.5.3.1 Repair parts figure title <title>....293
F.5.3.5.3.2 Repair part item <pi.item>....294
F.5.3.5.3.2.1 Item number entry <callout>....294
F.5.3.5.3.2.2 SMR code entry <smr>....294
F.5.3.5.3.2.3 NSN entry <nsn>....294
F.5.3.5.3.2.4 Commercial and Government Entity Code (CAGEC) <cageno> entry....294

Source: https://assist.dla.mil -- Downloaded: 2016-12-05T17:12Z
Check the source to verify that this is the current version before use.

CONTENTS

PARAGRAPH PAGE
F.5.3.5.3.2.5 Part number <partno> entry 294
F.5.3.5.3.2.6 Description 294
F.5.3.5.3.2.7 UOC 295
F.5.3.5.3.2.8 Serial number application 295
F.5.3.5.3.2.9 Quantity entry <qty> 295
F.5.3.5.3.2.10 Quantity per end item column 295
F.5.3.5.3.2.11 Mandatory Replacement 295
F.5.3.5.3.2.12 Unit of Measure 295
F.5.3.5.3.2.13 Unit of Issue 295
F.5.3.5.3.2.14 Reference designator 295
F.5.3.5.3.2.15 Next Higher Assembly 295
F.5.3.5.3.2.16 Parts breakdown reference 295
F.5.3.5.3.2.17 Other characteristics 295
F.5.3.5.4 Kits and kit repair parts 295
F.5.3.5.5 Expendable and durable items 296
F.5.3.6 Repair parts for special tools work package <stl_partswp> 296
F.5.3.6.1 Work package identification information <wpidinfo> 296
F.5.3.6.2 Initial setup information 296
F.5.3.6.3 Special tools repair parts items list <pi.category> 296
F.5.3.6.3.1 Functional group header <fncgrp> 296
F.5.3.7 Kit parts list work package <kitswp> 296
F.5.3.7.1 Work package identification information <wpidinfo> 297
F.5.3.7.2 Initial setup information 297
F.5.3.7.3 Kits part items list <pi.category> 297
F.5.3.7.3.1 Functional group header <fncgrp> 297
F.5.3.7.3.2 Kit part item group <kititem> 297
F.5.3.7.3.3 Kits part item quantity <qty> 297
F.5.3.8 Bulk items work package <bulk_itemswp> 297
F.5.3.8.1 Work package identification information <wpidinfo> 297
F.5.3.8.2 Initial setup information 297
F.5.3.8.3 Bulk item <pi.item> 297
F.5.3.8.3.1 ITEM column <callout> 297
F.5.3.8.3.2 Functional group header <fncgrp> 297
F.5.3.9 Special tools list work package <stlwp> 297
F.5.3.9.1 Work package identification information <wpidinfo> 298
F.5.3.9.2 Initial setup information 298
F.5.3.9.3 Special tools list <pi.category> 298
F.5.3.9.3.1 Item number column 298
F.5.3.9.3.2 Functional grouping <fncgrp> 298
F.5.3.9.3.3 D-coded items 298
F.5.3.9.3.4 Basis of Issue (BOI) <boi> 298
F.5.3.9.3.5 Quantity 298
F.5.3.9.3.6 Components list <kititem> 298
F.5.3.10 Cross-reference index work packages 298
F.5.3.10.1 National stock number (NSN) index work package <nsnindxwp> 298

Source: https://assist.dla.mil -- Downloaded: 2016-12-05T17:12Z
Check the source to verify that this is the current version before use.

CONTENTS

PARAGRAPH PAGE
F.5.3.10.1.1 Work package identification information <wpidinfo> 298
F.5.3.10.1.2 Initial setup information....298
F.5.3.10.1.3 NSN index <nsnindx> 299
F.5.3.10.2 Part number index work package <pnindxwp> 299
F.5.3.10.2.1 Work package identification information <wpidinfo> 299
F.5.3.10.2.2 Initial setup information....299
F.5.3.10.2.3 Part number index <pnindx> 299
F.5.3.10.3 Reference designator index work package <refdesindxwp> 299
F.5.3.10.3.1 Work package identification information <wpidinfo> 299
F.5.3.10.3.2 Initial setup information....299
F.5.3.10.3.3 Reference designator index <refdesindx> 299
F.5.3.10.4 Bulk figure reference 299
F.5.3.10.5 Sets and kits 299
F.5.3.11 Illustrations 300
F.5.3.11.1 Arrangement of illustrations 300
F.5.3.11.2 Use of illustrations 300
F.5.3.11.3 Identical parts/item numbers....300
F.5.3.11.4 Identical assemblies 300

F.6 NOTES 300

G SUPPORTING INFORMATION 303

G.1 SCOPE 303
G.1.1 Scope....303

G.2 APPLICABLE DOCUMENTS....303

G.3 DEFINITIONS....303

G.4 GENERAL REQUIREMENTS....303
G.4.1 General....303
G.4.2 Maintenance level applicability 303
G.4.3 Preparation of digital data for electronic delivery 303
G.4.4 Use of the DTD/XSLs....303
G.4.5 Content structure and format 304
G.4.6 Style and format....304
G.4.7 IETM functionality 304
G.4.8 Work package development....304
G.4.9 Selective application and tailoring....304

G.5 DETAILED REQUIREMENTS....304
G.5.1 Preparation of supporting information....304
G.5.2 References work package <refwp>....304
G.5.2.1 Work package identification information <wpidinfo> 304
G.5.2.2 Initial setup information....304

Source: https://assist.dla.mil -- Downloaded: 2016-12-05T17:12Z
Check the source to verify that this is the current version before use.

CONTENTS

PARAGRAPH		PAGE
G.5.2.3	Scope <scope>	304
G.5.2.4	Publication list <publist>	304
G.5.3	Maintenance allocation chart (MAC) (field level only)	305
G.5.3.1	Deleted	305
G.5.3.1.1	Deleted	305
G.5.3.1.2	Deleted	305
G.5.3.1.3	Deleted	305
G.5.3.2	Deleted	305
G.5.3.2.1	Deleted	305
G.5.3.2.2	Deleted	305
G.5.3.2.3	Deleted	305
G.5.3.3	Introduction for standard two-level maintenance format MAC work package <macintrowp>	305
G.5.3.3.1	Work package identification information <wpidinfo>	305
G.5.3.3.2	Initial setup information	305
G.5.3.3.3	Introduction <intro>	305
G.5.3.3A	Introduction for aviation two-level maintenance MAC work package <macintrowp>	310
G.5.3.3A.1	Work package identification information <wpidinfo>	310
G.5.3.3A.2	Initial setup information	310
G.5.3.3A.3	Introduction <intro>	310
G.5.3.4	MAC work package <macwp>	316
G.5.3.4.1	Work package identification information <wpidinfo>	316
G.5.3.4.2	Initial setup information	316
G.5.3.4.3	MAC entries	316
G.5.3.4.4	MAC	317
G.5.3.5	Tools and test equipment requirements <tereqtab>	318
G.5.3.6	Remarks <remarktab>	318
G.5.4	Components of end item (COEI) and basic issue items (BII) lists work package (operator only) <coeibiiwp>	318
G.5.4.1	Work package identification information <wpidinfo>	318
G.5.4.2	Initial setup information	318
G.5.4.3	Introduction for COEI and BII lists work package <intro>	318
G.5.4.4	COEI list <coei>	320
G.5.4.4.1	List <coeitab>	320
G.5.4.5	BII list <bii>	320
G.5.5	AAL work package (operator only) <aalwp>	320
G.5.5.1	Work package identification information <wpidinfo>	320
G.5.5.2	Initial setup information	320
G.5.5.3	Introduction <intro>	321
G.5.5.4	AAL list <aal>	321
G.5.6	Expendable and durable items list work package <explistwp>	321
G.5.6.1	Work package identification information <wpidinfo>	322
G.5.6.2	Initial setup information	322
G.5.6.3	Introduction for expendable and durable items list work package <intro>	322

Source: https://assist.dla.mil -- Downloaded: 2016-12-05T17:12Z
Check the source to verify that this is the current version before use.

CONTENTS

PARAGRAPH PAGE
G.5.6.4 Expendable and durable items list <explist> 322
G.5.7 Tool identification list work package (Field level or above only) <toolidwp> 323
G.5.7.1 Work package identification information <wpidinfo> 323
G.5.7.2 Initial setup information 323
G.5.7.3 Introduction for tool identification list work package <intro> 323
G.5.7.4 Tool identification list <toolidlist> 324
G.5.8 Mandatory replacement parts work package (Field level or above only) <mrplwp> 324
G.5.8.1 Work package identification information <wpidinfo> 324
G.5.8.2 Initial setup information 324
G.5.8.3 Introduction for mandatory replacement parts work package <intro> 324
G.5.8.4 Mandatory replacement parts list <mprl> 324
G.5.9 Critical safety items (CSI) and flight safety critical aircraft parts (FSCAP) work package <csi.fscap.wp> 325
G.5.9.1 Work package identification information <wpidinfo> 325
G.5.9.2 Initial setup information 325
G.5.9.3 Critical safety items (CSI) <csi> 325
G.5.9.4 Flight safety critical aircraft parts (FSCAP) (aviation only) <fscap> 325
G.5.10 Support items work package <supitemwp> 325
G.5.10.1 Work package identification information <wpidinfo> 325
G.5.10.2 Initial setup information 325
G.5.10.3 Introduction <intro> 325
G.5.10.4 Support items lists 325
G.5.11 Additional work packages <genwp> 326

G.6 NOTES 326

H. DESTRUCTION OF ARMY MATERIEL TO PREVENT ENEMY USE 337

H.1 SCOPE 337

H.2 APPLICABLE DOCUMENTS 337

H.3 DEFINITIONS 337

H.4 GENERAL REQUIREMENTS 337
H.4.1 General 337
H.4.1.1 Types of manuals 337
H.4.1.1.1 Destruction manuals for a stock class (FSC) 337
H.4.1.1.2 Destruction manuals/work packages for a weapon system 337
H.4.2 Use of DTDs/XSLs 338
H.4.3 Content structure and format 338
H.4.4 Style and format 338

Source: https://assist.dla.mil -- Downloaded: 2016-12-05T17:12Z
Check the source to verify that this is the current version before use.

CONTENTS

PARAGRAPH PAGE
H.4.5 Selective application and tailoring....338

H.4.6 General destruction rules....338

H.5 DETAILED REQUIREMENTS
H.5.1 Destruction general information work package <destruct-ginfowp>....338
H.5.1.1 Work package identification information <wpidinfo>....338
H.5.1.2 Initial setup information....339
H.5.1.3 Scope of manual....339
H.5.1.4 Authority to destroy material....339
H.5.1.5 Reporting destruction....339
H.5.1.6 General destruction information....339
H.5.1.7 Degree of destruction....340
H.5.1.8 Essential components and spare parts....340
H.5.2 Destruction procedures work package <destruct-materialwp>....340
H.5.2.1 Work package idneitifcation information <wpidinfo>....340
H.5.2.2 Initial setup information....340
H.5.2.3 Parts list....340
H.5.2.4 Specific destruction procedures....340
H.5.2.5 Classified equipment and documents....341

H.6 NOTES....341

APPENDIX I. BATTLE DAMAGE ASSESSMENT AND REPAIR....343

I.1 SCOPE....343

I.2 APPLICABLE DOCUMENTS....343

I.3 DEFINITIONS....343

I.4 GENERAL REQUIREMENTS....343
I.4.1 Maintenance level....343
I.4.2 Use od the DTDs/XSLs....343
I.4.3 Content structure and format....343
I.4.4 Style and format....343
I.4.5 Selective application and tailoring....344

I.5 DETAILED REQUIREMENTS....344
I.5.1 Content....344
I.5.1.1 Operating procedures....344
I.5.2 BDAR information work packages....344
I.5.2.1 General information work package < >....344
I.5.2.1.1 Work package idnetification information....344
I.5.2.1.2 Initial setup information....344

Source: https://assist.dla.mil -- Downloaded: 2016-12-05T17:12Z
Check the source to verify that this is the current version before use.

CONTENTS

PARAGRAPH PAGE
I.5.2.1.3 BDAR fixes statement 344
I.5.2.1.4 Introduction....345
I.5.2.1.5 Standards and practices....345
I.5.2.1.6 Tasks and responsibilities 345
I.5.2.1.7 Combat threats (Aviation only) 346
I.5.2.2 Battle damage assessment work packages <damage-assesswp> 346
I.5.2.2.1 Work package identification information 346
I.5.2.2.2 Initial setup information....346
I.5.2.2.3 BDAR fixes statement 346
I.5.2.2.4 Introduction....346
I.5.2.2.5 Fault assessment tables 347
I.5.2.3 Repair work packages <genrepairwp> 347
I.5.2.3.1 Work package identification information 347
I.5.2.3.2 Initial setup information....347
I.5.2.3.3 BDAR fixes statement 347
I.5.2.3.4 Introduction....347
I.5.2.3.5 Repair procedure....348
I.5.2.4 References work package 348
I.5.2.5 Special or fabricated tools work package 349
I.5.2.5.1 Work package identification information 349
I.5.2.5.2 Initial setup information....349
I.5.2.5.3 BDAR fixes statement 349
I.5.2.5.4 Content and format 349
I.5.2.6 Expendable and durable items work package....349
I.5.2.7 Substitute materials/parts work package < > 349
I.5.2.7.1 Work package identification information 349
I.5.2.7.2 Initial setup information....349
I.5.2.7.3 BDAR fixes statement 349
I.5.2.7.4 Content....349

I.6 NOTES 349

Source: https://assist.dla.mil -- Downloaded: 2016-12-05T17:12Z
Check the source to verify that this is the current version before use.

CONTENTS

FIGURE PAGE

Figure 1. Examples of warnings, cautions and notes....51
Figure 2. Example of an in-line alert on a pane with scrolling....52
Figure 3. Example of an in-line alert on a pane with no scrolling....53
Figure 4. Example of multiple alerts acknowledgment using in-line alert....54
Figure 5. Example of alert acknowledgment when alert applies to entire procedure or task....56
Figure 6. Example of pop-up alert superimposed over applicable information....58
Figure 7. List of approved safety warning icons....59
Figure 8. List of approved hazardous materials warning icons....62
Figure 9. Example of an in-line note....64
Figure 10. Example of a note in a message dialog box....65
Figure 11. Example of a warning summary....66
Figure 12. Example of an identification information frame....67
Figure 13. Example of Identification information for DMWR with National Overhaul Standards....69
Figure 14. Example of Identification information for NMWR....70
Figure 15. Example of Identification Information for TM with National Overhaul Standards....71
Figure A-1. System with inner and outer shell....78
Figure A-2. System with inner shell....78
Figure A-3. Placement of project functions....81
Figure A-4. Required function icons....81
Figure A-5. A single pane main content area....82
Figure A-6. A left and right dual pane main content area....83
Figure A-7. A upper and lower dual pane main content area....83
Figure A-8. A three pane main content area....84
Figure A-9. Message dialog box....94
Figure A-10. Fill-in dialog box....94
Figure A-11. Fill-in dialog box using number-range....95
Figure A-12. Menu dialog box....96
Figure A-13. Multiple-choice dialog box....97
Figure A-14. Composite dialog box....97
Figure A-15. Screen stacking....99
Figure A-16. Example of redlining a graphic....110
Figure A-17. Example of a system simulation....112
Figure A-18. Example of a wire/fluid system tracing....112
Figure A-19. Example of assembly/disassembly graphic....115
Figure A-20. Example of a locator graphic....115
Figure A-21. Example of a locator component graphic....116
Figure A-22. Example of hotspotting....117
Figure A-23. Example of procedure checklist....119
Figure A-24. Example of an administrative log....119
Figure A-25. Example of access by MWO....121
Figure A-26. Example of context search....123

Source: https://assist.dla.mil -- Downloaded: 2016-12-05T17:12Z
Check the source to verify that this is the current version before use.

CONTENTS

FIGURE PAGE

Figure A-27. Example of a simultaneous text and graph display.....124
Figure A-28. Example of a tear off window.....125
Figure A-29. Example of a tool tip.....127
Figure B-1. Example of a station diagram.....176
Figure D-1. Example of a cover sheet/frame for preshop analysis checklist. 209
Figure D-2. Example of a component checklist. 210
Figure D-3. Example of content for an operational checkout procedure. 211
Figure D-4. Example of content for a troubleshooting procedure (Method A).....212
Figure D-5. Example of content for a troubleshooting procedure (Method B).....213
Figure D-6. Example of content for a troubleshooting procedure (Method C).....214
Figure D-7. Example of content for a combination testing and troubleshooting procedure.....2165
Figure E-1. Example of a PMCS mandatory replacement parts list.....263
Figure E-2. Example of tabular and narrative reliability, availability, and maintainability data.....264
Figure E-3. Example of a lubrication chart. 265
Figure E-4. Example of an illustrated list of manufactured items.....266
Figure E-5. Example of torque limits data.....267
Figure E-6. DELETED 268
Figure E-7. Example of two chart diagram. 269
Figure E-8. Example of area diagram for PMD. 271
Figure E-8A. Example of area diagram for PMS 271
Figure E-9. Example of an inspection area diagram.....272
Figure E-10. Example of inspection access provisions. 273
Figure F-1. Example of an introduction work package. 301
Figure F-2. Example of a repair parts list illustration.....302
Figure G-1. Example of references.....327
Figure G-2. DELETED.....328
Figure G-3. DELETED.....328
Figure G-4. Example of standard 2 level maintenance MAC introduction.....329
Figure G-4A. Example of aviation 2 level MAC introduction.....330
Figure G-5. Example of an introduction for COEI and BII lists. 331
Figure G-6. Example of an introduction for an additional authorization list. 333
Figure G-7. Example of an introduction for an expendable and durable items list.....334
Figure G-8. Example of an introduction for a tool identification list.....335
Figure I-1. Example of BDAR assessment troubleshooting procedure.....350
Figure I-2. Example of BDAR assessment table.....351
Figure I-3. Example substitute materials list.....352
Figure I-4. Example of substitute lubricants and hydraulic fluids list.....353
Figure I-5. Example of substitute fuels list.....354

Source: https://assist.dla.mil -- Downloaded: 2016-12-05T17:12Z
Check the source to verify that this is the current version before use.

CONTENTS

TABLE PAGE

TABLE A-I. Standard IETM fonts....85
TABLE A-II. Classification bar - Classification colors and markings....86
TABLE A-III. Classification bar - Distribution colors and markings....86
TABLE A-IV. Standard Hotspot Icons....87
TABLE A-V. Hotspot in Graphics....89
TABLE A-VI. Table navigation and display....90
TABLE A-VII. Session standard icons....91
TABLE A-VIII. Bookmark functions and standard icons....92
TABLE A-IX. Annotation functions and standard icons....92
TABLE A-X. Redline functions and standard icons....93
TABLE A-XI. Browsing display locations and recommended icons....93
TABLE A-XII. Cursor modes....99
TABLE A-XIII. Audio Control Standard Icons....99
TABLE A-XIV. Graphical Navigation Standard Icons....100
TABLE A-XV. Additional Graphical Navigation Standard Icons....101
TABLE A-XVI. Functionality Matrix Categories....102
TABLE A-XVII. Functionality Matrix....105
TABLE A-XVIII. Publication Type and Title with Associated Context Matrix Table....131
TABLE A-XIX. IETM Requirement Matrix for....133
TABLE A-XX. IETM Requirement Matrix for....137
TABLE A-XXI. IETM Requirement Matrix for....143
TABLE A-XXII. DMWR/NMWR Requirement Matrix for....149
TABLE D-I. Test Element Matrix....206

Source: https://assist.dla.mil -- Downloaded: 2016-12-05T17:12Z
Check the source to verify that this is the current version before use.

CONTENTS

TABLE PAGE

This page intentionally left blank.

Source: https://assist.dla.mil -- Downloaded: 2016-12-05T17:12Z
Check the source to verify that this is the current version before use.

1. SCOPE.

1.1 Scope. This standard establishes the technical content, style, format and functionality requirements for all Interactive Electronic Technical Manuals (IETMs) for major weapon systems, and their related systems, subsystems, equipment, weapons replacement assemblies (WRAs), and shop replacement assemblies (SRAs). The requirements are applicable for all maintenance levels through overhaul (depot) including Depot Maintenance Work Requirements (DMWRs) and National Maintenance Work Requirements (NMWRs). The requirements can be used to develop all IETMs for interactive screen presentations.

1.2 Paragraphs with limited applicability. This standard contains paragraphs and specific requirements that are not applicable to all Services. Such paragraphs or requirements are prefixed to indicate the Services to which they pertain: (A) Army; (N) Navy; (MC) Marine Corps; and (F) Air Force. Portions not prefixed are applicable to all services.

1.3 Use of the technical content. In addition to using the technical content requirements provided herein for the development of IETM, the technical information developed in accordance with this standard and MIL-STD-3008 (TM) can be used to provide the necessary input to other external systems that are designed to collect and report operations, maintenance, historical and parts requisition data required for efficient management and support of aviation and non-aviation weapon systems and their related systems, equipment, and components/modules.

2. APPLICABLE DOCUMENTS.

2.1 General. The documents listed in this section are specified in sections 3, 4, and 5 of this standard. This section does not include documents cited in other sections of this multipart standard or recommended for additional information or as examples. While every effort has been made to ensure the completeness of this list, document users are cautioned that they must meet all specified requirements documents cited in sections 3, 4, and 5 of this standard, whether or not they are listed.

2.2 Government documents.

2.2.1 Specifications, standards and handbooks. The following specifications, standards, and handbooks form a part of this document to the extent specified herein. Unless otherwise specified, the issues of these documents are those cited in the solicitation or contract.

SPECIFICATIONS

DEPARTMENT OF DEFENSE

MIL-DTL-24784 — Manuals, Technical: General Acquisition And Development Requirements

MIL-PRF-28000 — Digital Representation for Communication of Product Data: IGES Application Subsets and IGES Application Protocols

MIL-PRF-28002 — Raster Graphics Representation in Binary Format, Requirements for

Source: https://assist.dla.mil -- Downloaded: 2016-12-05T17:12Z
Check the source to verify that this is the current version before use.

MIL-PRF-28003 — Digital Representation for Communication of Illustration Data: CGM Application Profile

STANDARDS

DEPARTMENT OF DEFENSE

MIL-STD-882 — System Safety

MIL-STD-1309 — Definition of Terms for Testing, Measurement, and Diagnostics

MIL-STD-1686 — Electrostatic Discharge Control Program for Protection of Electrical and Electronic Parts, Assemblies, and Equipment (Excluding Electrically Initiated Explosive Devices) (Metric)

MIL-STD-2361 — Digital Publications Development

HANDBOOKS

DEPARTMENT OF DEFENSE

MIL-HDBK-113 — Guide for the Selection of Lubricants, Functional Fluids, Preservatives and Specialty Products for use in Ground Equipment Systems

MIL-HDBK-263 — Electrostatic Discharge Control Handbook for Protection of Electrical and Electronic Parts, Assemblies and Equipment, Excluding Electrically Initiated Explosive Devices (Metric)

MIL-HDBK-275 — Guide for Selection of Lubricants, Fluids, and Compounds for Use in Flight Vehicles and Components

MIL-HDBK-1222 — Guide to the General Style and Format of U.S. Army Work Package Technical Manuals

MIL-HDBK-9660 — Handbook for DoD-Produced CD-ROM Products

(Copies of these documents are available online at http://assist.daps.dla.mil/quicksearch/ or from the Standardization Document Order Desk, 700 Robbins Avenue, Building 4D, Philadelphia, PA 19111-5094.)

H4/H8 — Cataloging Handbook: Commercial and Government Entity Code (United States and Canada) - Name to Code

H6 — Federal Supply Cataloging Handbook

(Copies of Handbooks H4/H8 and H6 are available from the Commander, Defense Logistics Services Center, Battle Creek, MI 49017-3084.)

Source: https://assist.dla.mil -- Downloaded: 2016-12-05T17:12Z
Check the source to verify that this is the current version before use.

2.2.2 Other Government documents and publications. The following other Government documents and publications form a part of this document to the extent specified herein. Unless specified otherwise, the issues are those cited in the solicitation or contract.

AR 25-30	—	The Army Publishing Program
AR 75-1	—	Malfunctions Involving Ammunition and Explosives (RCS CSGLD--1961(MI))
AR 95-1	—	Aviation Flight Regulations.
AR 385-64	—	U.S. Army Explosives Safety Program
CTA 50-909	—	Field and Garrison Furnishings and Equipment
CTA 50-970	—	Expendable/Durable Items (Except Medical, Class V, Repair Parts, and Heraldic Items)
DA PAM 25-30	—	Consolidated Army Publications and Forms Index
DA PAM 25-40	—	Army Publishing
DA PAM 385-63	—	Range Safety
DA PAM 385-64	—	Ammunition and Explosives Safety Standards
DA PAM 738-751	—	Functional Users Manual for The Army Maintenance Management System-Aviation (TAMMS-A)
DA PAM 750-8		The Army Maintenance Management System (TAMMS) Users Manual

(Application for copies should be addressed to U.S. Army Publications Distribution Center, 1655 Woodson Road, St. Louis, MO 63114-6181.)

DOD 5200.1-R	—	DoD Information Security Program
DOD 5220.22-M	—	National Industrial Security Program Operating Manual
DOD 5230.24	—	Distribution Statements on Technical Documents
DOD 5400.7-R	—	DoD Freedom of Information Act Program

(Copies of DOD documents are available at http://www.dtic.mil/whs/directives/.)

FM 3-04.500	—	Army Aviation Maintenance
FM 4-25.11	—	First Aid
FM 5-250	—	Explosives and Demolitions
Joint Pub 1-02	—	Department of Defense Dictionary of Military and Associated Terms
SB 11-573	—	Painting and Preservation of Supplies Available for Field Use for Electronics Command Equipment
SB 742-1	—	Inspection of Supplies and Equipment Ammunition Surveillance Procedures.

Source: https://assist.dla.mil -- Downloaded: 2016-12-05T17:12Z
Check the source to verify that this is the current version before use.

TB 43-0118	—	Field Instructions for Painting and Preserving Electronics Command Equipment Including Camouflage Patterns Painting of Electronics Equipment Shelters.
TB 43-0209	—	Color, Marking and Camouflage Painting of Military Vehicles, Construction Equipment, and Materials Handling Equipment
TM 1-1500-204-23	—	Aviation Unit Maintenance (AVUM) and Aviation Intermediate Maintenance (AVIM) Manual for General Aircraft Maintenance (Consists of ten volumes)
TM 1-1500-328-23	—	Aeronautical Equipment Maintenance Management Policies and Procedures
TM 1-1500-335-23	—	Nondestructive Inspection Methods
TM 1-1500-344-23	—	Cleaning and Corrosion Control (4 volumes)
TM 43-0139	—	Painting Instructions for Army Materiel
TM 55-1500-342-23	—	Army Aviation Engineering Manual, Weight and Balance
TM 55-1500-345-23	—	Painting and Marking of Army Aircraft

(Copies of these publications are available from the U.S. Army Publications Distribution Center, 1655 Woodson Road, St. Louis, MO 63114-6181.)

2.3 Non-Government publications. The following documents form a part of this document to the extent specified therein. Unless otherwise specified, the issues of these documents are those cited in the solicitation or contract.

AMERICAN NATIONAL STANDARDS INSTITUTE (ANSI)

ANSI Y32.10	—	Diagrams, Fluid Power, Graphic Symbols for
ISO 9000 Series	—	Quality

(Application for copies should be addressed to the American National Standards Institute Inc., 25 West 43rd Street, New York, NY 10036.)

AMERICAN SOCIETY OF MECHANICAL ENGINEERS

ASME-Y14.38	—	Abbreviations for Use on Drawings and in Text
ASME-Y14.100	—	Engineering Drawing Practices

(Application for copies should be addressed to the American Society of Mechanical Engineers, 3 Park Avenue, New York, NY 10016-5990.)

Source: https://assist.dla.mil -- Downloaded: 2016-12-05T17:12Z
Check the source to verify that this is the current version before use.

AMERICAN SOCIETY FOR TESTING AND MATERIALS (ASTM)

ASTM-F856	—	Standard Practice for Mechanical Symbols, Shipboard—Heating, Ventilation, and Air Conditioning (HVAC)

(Applications for copies should be addressed to the American Society for Testing Material, 100 Barr Harbor Drive, West Conshohocken, PA 19428-2959, (online: www.astm.org))

INSTITUTE OF ELECTRICAL AND ELECTRONICS ENGINEERS (IEEE)

IEEE 91-1991	—	Graphic Symbols for Logic Functions
IEEE 260.1-2004	—	IEEE Standard Letter Symbols for Units of Measurement
IEEE 280-1985	—	Letter Symbols for Use in Electrical Science and Electrical Engineering
IEEE 315A-1986	—	Graphic Symbols for Electrical and Electronic Diagrams
IEEE 945-1984	—	IEEE Recommended Practice for Preferred Metric Units for Use in Electrical and Electronics, Science and Technology

(Application for copies should be addressed to the Institute of Electrical and Electronics Engineers, Inc., 345 East 47th Street, New York, NY 10017.)

2.4 Order of precedence. In the event of a conflict between the text of this document and the references cited herein, the text of this document takes precedence. Nothing in this document, however, supersedes applicable laws and regulations unless a specific exemption has been obtained.

3. DEFINITIONS.

3.1 Acronyms used in this standard. The acronyms used in this standard are defined as follows:

AAL	Additional Authorization List
AMC	Army Materiel Command/Aviation Maintenance Company
AMDF	Army Master Data File
ANSI	American National Standards Institute
Ao	Operational Availability
AOAP	Army Oil Analysis Program
APD	Army Publishing Directorate
AQL	Acceptable Quality Level
AR	Army Regulation
ASB	Aviation Support Battalion
ASRL	Army SGML Registry and Library
ASTM	American Society for Testing and Materials

Source: https://assist.dla.mil -- Downloaded: 2016-12-05T17:12Z
Check the source to verify that this is the current version before use.

ATE	Automatic Test Equipment
BDAR	Battle Damage Assessment and Repair
BII	Basic Issue Items
BIT	Built in Test
BITE	Built in Test Equipment
BOI	Basis of Issue
CAGEC	Commercial and Government Entity Code
CALS	Continuous Acquisition Life Cycle Support
CD	Compact Disk
CD-ROM	Compact Disk Read Only Memory
CGM	Computer Graphics Metafile
COEI	Components of End Item
COMSEC	Communications Security
CPC	Corrosion Prevention and Control
CSI	Critical Safety Items
CTA	Common Table of Allowance
DMWR	Depot Maintenance Work Requirement
DOD	Department of Defense
DODISS	Department of Defense Index of Specifications and Standards
DTD	Document Type Definition
DX	Direct Exchange
ECM	Electronic Countermeasures
ECP	Engineering Change Proposal
e.g.	For example
EIC	End Item Code
EIR	Equipment Improvement Recommendation
EMP	Electromagnetic Pulse
ESD	Electrostatic Discharge
FAR	Federal Acquisition Regulations
FGC	Functional Group Code
FSCAP	Flight Safety Critical Aircraft Parts
GL	Grade Level
HAP	Hazardous Air Pollutant
HCI	Hardness Critical Item
HCP	Hardness Critical Process
HR	Hand Receipt

Source: https://assist.dla.mil -- Downloaded: 2016-12-05T17:12Z
Check the source to verify that this is the current version before use.

i.e.	That is
IEC	International Electrotechnical Commission
IEEE	Institute of Electrical and Electronics Engineers
IETM	Interactive Electronic Technical Manual
IGES	Initial Graphics Exchange Specification
ISO	International Organization for Standardization
JTA	Joint Table of Allowances
JTCI	Joint Technical Committee for Information Technology
LAN	Local Area Network
LMI	Logistics Management Information
LOAP	List of Applicable Publications
LOGSA	Logistics Support Activity
LRU	Line Replacement Unit
MAC	Maintenance Allocation Chart
MEL	Maintenance Expenditure Limit
MOC	Maintenance Operational Checks
MOS	Military Occupational Specialty
MTBCM	Meantime Between Corrective Maintenance
MTBF	Meantime Between Failures
MTF	Maintenance Test Flight
MTOE	Modified Table of Organization and Equipment
MTTR	Mean Time to Repair
MUX	Multiplex
MWO	Modification Work Order
NATO	North Atlantic Treaty Organization
NBC	Nuclear, Biological, and Chemical
NDTI	Nondestructive Testing Inspection
NHA	Next Higher Assembly
NIIN	National Item Identification Number
NMWR	National Maintenance Work Requirement
NSN	National Stock Number
ODS	Ozone Depleting Substances
OIP	Overhaul Inspection Procedure
OS	Output Specification
OSHA	Occupational Safety and Health Act
P/N	Part Number

Source: https://assist.dla.mil -- Downloaded: 2016-12-05T17:12Z
Check the source to verify that this is the current version before use.

PCB	Printed Circuit Boards
PI	Parts Information
PM	Publication Medium
PMA	Portable Maintenance Aid
PMAC	Preliminary Maintenance Allocation Chart
PMC	Preventive Maintenance Checklist
PMCS	Preventive Maintenance Checks and Services
PMI	Phased Maintenance Inspection
PMS	Preventive Maintenance Services
PSA	Preshop Analysis
QA	Quality Assurance
QTY	Quantity
RAM	Reliability, Availability, Maintainability
RCM	Reliability Centered Maintenance
RMS	Reliability, Maintainability, and Supportability
SB	Supply Bulletin
SC	Supply Catalog
SGML	Standard Generalized Markup Language
SKO	Sets, Kits, and Outfits
SMR	Source, Maintenance, and Recoverability
SRA	Specialized Repair Activity
SRAs	Shop Replacement Assemblies
SRU	Shop Replacement Units
TAMMS	Total Army Maintenance Management System
TAMMS	Total Army Maintenance Management System Aviation
TASMG	Theater Aviation Sustainment Maintenance Group
TB	Technical Bulletin
TBO	Time Between Overhaul
TDA	Tables of Distribution and Allowances
TM	Technical Manual
TMDE	Test, Measurement, and Diagnostic Equipment
TOE	Table of Organization and Equipment
U/I	Unit of Issue
UOC	Usable On Code
URL	Uniform Resource Locator
UUT	Unit Under Test

Source: https://assist.dla.mil -- Downloaded: 2016-12-05T17:12Z
Check the source to verify that this is the current version before use.

WP	Work Package
WRAs	Weapons Replacement Assemblies
WTB	Warranty Technical Bulletin
XML	Extensible Markup Language
XSL	XML Stylesheet Language

3.2 Acquiring Activity. The DoD component, activity, or organization of a using military service, or that organization delegated by a using service, that is responsible for the selection and determination of requirements for TMs.

3.3 Additional Authorization List (AAL) items. Items are optional (discretionary), are not essential to operate the end item, and are not listed on engineering drawings. Items are not turned in with the end item.

3.4 Adjust. To maintain or regulate within prescribed limits, by bringing into proper position, or by setting the operating characteristics to specified parameters.

3.5 Align. To adjust specified variable elements of an item to bring about optimum or desired performance.

3.6 American National Standards Institute (ANSI). A private sector organization, which plans, develops, establishes, or coordinates standards, specifications, handbooks, or related documents.

3.7 Army Master Data File (AMDF). The files required to record, maintain, and distribute supply management data between and from Army commands to requiring activities.

3.8 Army Oil Analysis Program (AOAP). Effort to detect impending equipment component failure and determine lubricant condition through periodic analytical evaluation of oil samples.

3.9 Assembled item. An item source coded AO, AF, AH, AL, or AD that is not stocked as an assembly but is assembled from its constituent repair parts.

3.10 Assembly. Two or more parts or subassemblies joined together to perform a specific function and capable of disassembly (e.g., brake assembly, fan assembly, audio frequency amplifier). Note that the distinction between an assembly and subassembly is determined by the individual application. An assembly in one instance may be a subassembly in another where it forms a portion of an assembly.

3.11 Auxiliary equipment. Equipment, accessories, or devices which, when used with basic equipment, extend or increase its capability (e.g., Modified Table of Organization and Equipment (MTOE) items, etc.).

3.12 DELETED.

3.13 DELETED.

3.14 Basic Issue Items (BII). The minimum essential items not listed in the drawings, but required to place the equipment in operation, to operate it, and to perform emergency repairs. Although shipped separately packaged, basic issue items must be with the equipment during operation and whenever it is transferred between property accounts. BII may be packed with COMSEC equipment.

Source: https://assist.dla.mil -- Downloaded: 2016-12-05T17:12Z
Check the source to verify that this is the current version before use.

3.15 Basis of Issue (BOI). The quantity of an item (special tool) authorized for the end item density spread or for the unit level specified.

3.16 Block diagram. A modified schematic diagram in which each group of maintenance-significant components that together performs one or more functions is represented by a single symbol or block. The block or symbol representing the group of components shows simplified relevant input and output signals pertinent to the subject diagram.

3.17 Built-in Test Equipment (BITE). Any identifiable device that is a part of the supported end item and is used for testing that supported end item.

3.18 Bulk material. Material issued in bulk for manufacture or fabrication of support items (e.g., sheet metal, pipe tubing, bar stock, or gasket material); excludes expendable items.

3.19 Calibrate. To determine and cause corrections or adjustments to be made to instruments or test, measuring, and diagnostic equipment used in precision measurement. Consists of comparisons of two instruments, one of which is a certified standard of known accuracy, to detect and adjust any discrepancy in the accuracy of the instrument being compared.

3.20 Callout. Anything placed on an illustration to aid in identifying the objects being illustrated, such as index numbers, nomenclature, leader lines, and arrows.

3.21 Commercial and Government Entity Code (CAGEC). A five character code assigned to commercial activities that manufacture or supply items used by the Federal Government and to Government activities that control design or are responsible for the development of certain specifications, standards, or drawings that control the design of Government items. CAGE Code assignments are listed in the H4/H8 CAGE Publications.

3.22 Complete repair. Maintenance capacity, capability, and authority to perform all the corrective maintenance tasks of the repair function in a use or user environment in order to restore serviceability to a failed item. Excludes the prescriptive maintenance functions, overhaul, and rebuild.

3.23 Component. A constituent part not normally considered to be capable of independent operation; a piece part.

3.24 Components of End Item (COEI). Items identified on the engineering drawing tree, that are physically separated and distinct from the end item.

3.25 Comprehensibility. The completeness with which a user in the target audience understands the information in the TM.

3.26 Computer Graphics Metafile (CGM). A standard digital form for graphics preparation.

3.27 Continuous Acquisition Life-cycle Support (CALS). A DoD initiative to transition from paper-intensive, non-integrated weapon systems design, manufacturing, and support processes to a highly automated and integrated mode of operation. This transition will be facilitated by acquiring, managing, and using technical data in standardized digital form.

3.28 Continuous Acquisition Life-cycle Support (CALS) raster. Compressed scanned raster images (CCITT, Group 4) in accordance with MIL-PRF-28002

Source: https://assist.dla.mil -- Downloaded: 2016-12-05T17:12Z
Check the source to verify that this is the current version before use.

3.29 Corrosion Prevention and Control (CPC). Systematic maintenance steps/procedures taken to prevent or retard the gradual destruction and/or pitting of a metal surface or other materials, such as rubber and plastic, due to chemical attack.

3.30 Degradation. The reduction in systems/subsystems/components performance capability.

3.31 Department of Defense (DoD). The Office of the Secretary of Defense (OSD) (including all boards and councils), the Military Departments (Army, Navy, and Air Force), the Organization of the Joint Chiefs of Staff (OJCS), the Unified and Specified Commands, the National Security Agency (NSA), and the Defense Agencies.

3.32 Department of Defense Ammunition Code (DODAC). An eight character code developed to indicate interchangeability of ammunition and explosive items in Federal Supply Classification (FSC) Group 13. This eight-character code is divided into two parts. The two parts are separated by a hyphen. The first four digits represent the FSC; the letter and last three numerals represent the DoD Identification Code that is assigned to items that are interchangeable in function and use. The eight-character DoD ammunition code is used for such ammunition operations as worldwide stock status reporting and requisitioning when specific items are not required.

3.33 Depot-level maintenance. Maintenance that is beyond the capability of the field and below depot sustainment maintenance activities. Depot-level maintenance normally consists of overhaul, recondition, manufacture, repair, or modification and requires technical assistance beyond lower maintenance level capability.

3.34 Depot Maintenance Work Requirement (DMWR). A maintenance serviceability document for depot maintenance operations. The document prescribes the essential factors to ensure that an acceptable and cost-effective product is obtained.

3.35 Digital graphics forms. A standard graphics form acceptable for graphics preparation under this standard. These forms include Computer Graphics Metafile (CGM), CALS raster, and Initial Graphics Exchange Specification (IGES).

3.36 DELETED.

3.37 Disassemble. The step-by-step taking apart (or breakdown) of a spare or functional group-coded item to the level of its least componency identified as maintenance-significant (i.e., assigned an SMR code for the category of maintenance under consideration).

3.38 Document instance. The instance is the actual document text and its accompanying SGML/XML tags conforming to the specifications and restrictions set forth in the DTD.

3.39 Document Type Definition (DTD). The definition of the markup rules for a given class of documents. A DTD or reference to one should be contained in any SGML/XML conforming document.

3.40 Electronic Countermeasures (ECM). Electronic surveillance equipment for detecting and adverting threatening enemy weapons systems.

Source: https://assist.dla.mil -- Downloaded: 2016-12-05T17:12Z
Check the source to verify that this is the current version before use.

3.41 Effectivity. The act or process of identifying weapon systems or end-items and their hardware and software system and subsystems by their associated usable on code (UOC), serial number, model number, part number/CAGEC, NSN, end item code (EIC), software version or modification work order (MWO). Effectivity is included to signify that certain configuration (s) or modifications apply to a given weapon system/equipment.

3.42 Electronic Manual (EM) Number. A chronologically numbered 4-digit number (assigned by APD), utilizing zeros when necessary to maintain four digits, following the letters "EM" (as in EM 0001, EM 0002, EM 0003). The EM number functions as the CD nomenclature assigned to an ETM/IETM comprised of one or more CDs (i.e., the same EM number applies to all CDs distributed as a set if the series and size of related equipment/WS manuals dictate use of more than one CD).

3.43 Electrostatic Discharge (ESD). Static electricity. A transfer of electrostatic charge between objects of different potentials caused by direct contact or induced by an electrostatic field. Devices such as integrated circuits and discrete devices (e.g., resistors, transistors, and other semiconductor devices) are susceptible to damage from electrostatic discharge.

3.44 End Item Code (EIC). A final combination of end products, component parts, or materials that is ready for its intended use (e.g., tank, mobile machine shop, aircraft, receiver, rifle, recorder).

3.45 Embedded. Describes hardware and or software that forms a integral part/component of some larger system and that is expected to function without human intervention. An embedded system usually does not include peripherals (e.g. keyboard, monitor, storage etc.). Embedded systems most often will provide real-time response.

3.46 Equipment. One or more units capable of performing specified functions.

3.47 Equipment Improvement Recommendation (EIR). Solicitation of suggestions from end item users/operators for means to improve the operation and effectiveness of equipment. The SF 368 is the instrument by which suggested improvements are forwarded to the cognizant agency.

3.48 Equipment nomenclature. The official name of the equipment as shown in AMDF.

3.49 Essential. Those systems/subsystems/components that are required for a designated mission or system operation.

3.50 Evacuation. A combat service support function that involves the movement of recovered material from a main supply route; maintenance collection material may be returned to the user, to the supply system for reissue, or to property disposal activities.

3.51 Expendable items. Items, other than repair parts that are consumed in use (e.g., paint, lubricants, wiping rags, tape, cleaning compounds, sandpaper).

3.52 Extensible Markup Language (XML). A subset of SGML. It enables generic SGML to be served, received, and processed on the Web in the way that is now possible with HTML. XML has been designed for ease of implementation and for interoperability with both SGML and HTML.

Source: https://assist.dla.mil -- Downloaded: 2016-12-05T17:12Z
Check the source to verify that this is the current version before use.

3.53 Field Maintenance. Field maintenance is on-system maintenance and is mainly replacement of defective parts and preventative maintenance. Field maintenance returns repaired equipment to the soldier. Some “off-system” maintenance can be done at field level if, based on task analysis, it is simple to complete or it is critical to mission readiness.

3.54 Follow-on maintenance. A follow-on maintenance is a maintenance condition that must be accomplished sometime following the completion of a task to clean up or undo actions performed during the task.

3.55 Footer. One or more lines of standard text that appear at the bottom of each page (also called feet and running feet).

3.56 Frame-based. The format and style of the presented information are optimized for window presentation to assure maximum comprehension. The presentation format is "frame-oriented" and not "page-oriented".

3.57 Functional diagram. A type of illustration in which symbols are connected by lines to show relationships among the symbols. The symbols may be rectangles or other shapes, standard electronic symbols representing components or functions, or pictorials representing equipment or components. Where appropriate, voltage readings are shown. The lines may represent procedures or processes, such as signal or logic flow, and physical items, such as wires. Functional diagram includes schematics, wiring and piping diagrams, logic diagrams, flow charts, and block diagrams.

3.58 Functional Group Code (FGC). A basic (usually two-position) group code assigned to identify major components, assemblies, and subassemblies to a functional system. Subordinate subfunctional groups/subassemblies are coded to relate back to the basic (top position) FGC in a sequential, Next Higher Assembly (NHA) relationship (i.e., top-down breakdown structure).

3.59 DELETED.

3.60 Graphic(s). Any type of presentation or representation, that gives a clear visual impression.

3.60A HAP-Free. HAP-free means a material that contains no more than 0.1 percent by mass of any individual HAP that is an OSHA-defined carcinogen as specified in 29 CFR 1910.1200(d)(4) and no more than 1.0 percent by mass for any other individual HAP, as demonstrated by a specification or standard, or a manufacturer's representation, such as in a material safety data sheet or product data sheet.

3.61 Hardness Critical Item (HCI). A support item that provides the equipment with special protection from electromagnetic pulse (EMP) damage during a nuclear attack.

3.62 Hardness Critical Process (HCP). A process affecting a mission critical item that could degrade system survivability in a nuclear, biological, or chemical hostile environment if hardness were not considered. Nuclear HCPs are processes, finishes, specifications, manufacturing techniques, and/or procedures which are hardness critical, and which, if changed, could degrade nuclear hardness.

3.63 Hardtime scheduled maintenance. Hardtime maintenance is scheduled maintenance conducted at predetermined fixed intervals because of age, calendar, or usage such as operating time, flying hours, miles driven, or rounds fired.

Source: https://assist.dla.mil -- Downloaded: 2016-12-05T17:12Z
Check the source to verify that this is the current version before use.

3.64 Header. One or more lines of standard text that appear at the top of each page (also called heads and running heads).

3.65 Icon. Pictorial representation; visual image to give immediate recognition of a hazard or to provide essential information.

3.66 Illustration. A general term meaning graphic presentations of all types. Illustrations include pictorials, functional diagrams, and line graphs. This term is used synonymously with figure, graphic, drawing, diagram, and artwork.

3.67 Initial Graphics Exchange Specification (IGES). A standard digital form for graphics preparation. Defined by MIL-PRF-28000.

3.68 In-line. Components such as frames, dialog boxes, figures, graphics, icons that are arranged sequentially to form a unit from overall parts.

3.69 Inspect. To determine the serviceability of an item by comparing its physical, mechanical, and/or electrical characteristics with established standards through examination (e.g., by sight, sound, or feel).

3.70 Institute of Electrical and Electronics Engineers (IEEE). Membership organization that includes engineers, scientists and students in electronics and allied fields. Founded in 1963, it has over 300,000 members and is involved with setting standards for computers and communications.

3.71 Interactive Electronic Technical Manual (IETM). A technical manual prepared in digital form and designed for interactive display to the maintenance technicians or system operator end users by means of a computer controlled viewer.

3.72 International Organization for Standardization (ISO). Organization that sets international standards, founded in 1946 and headquartered in Geneva. It deals with all fields except electrical and electronics, which is governed by the older International Electrotechnical Commission (IEC), also in Geneva. With regard to information processing, ISO and IEC created JTCI, the Joint Technical Committee for Information Technology.

3.73 Interchangeability. Defined in this specification as above, the scope of classic interchangeability. The intent/purpose of this specification is to allow fully innovative fixes/repairs to the aircraft. This includes minor modifications that can be made to achieve interchangeability. Capable of being put or used in place of each other.

3.74 Legend. A tabular listing and explanation of the numbers or symbols on a figure or an illustration.

3.75 Limited repair. Scope of corrective repair authorized to be performed by a level of maintenance lower than the level of authorized complete repair.

3.76 Line Replacement Unit (LRU). An item normally removed and replaced as a single unit to correct a deficiency or malfunction on a weapon system or end item of equipment.

3.77 Linear IETM. Technical data that is displayed in a sequential or document oriented manner. The sequence of the data presentation is largely predefined by the data author. It is an organization of technical data that often replicates the order of information found in a page-based document. There is generally a default “path” through the technical data.

Source: https://assist.dla.mil -- Downloaded: 2016-12-05T17:12Z
Check the source to verify that this is the current version before use.

3.78 List of Applicable Publications (LOAP). A separate listing of publications which are related to a specific piece of equipment, group of equipment, or system.

3.79 Logic tree. Diagram comprised of a branching series of questions, resulting in a "yes" or "no" answer, leading to determination and resolution of problem.

3.80 Logistics Management Information (LMI). The selective application of scientific and engineering efforts undertaken during the acquisition process, as part of the systems engineering process, to assist in acquiring the required support; and providing the required support during the operational phrase at minimum cost..

3.81 Maintenance Allocation Chart (MAC). A list of equipment maintenance functions showing maintenance level. The MAC is arranged in functional group code sequence or in top-down, breakdown sequence in the logical order of disassembly following the parts information order of assembly/subassembly listings.

3.82 Maintenance level. The separation of maintenance activities or functions in the U.S. Army according to the required skills and available facilities.

3.83 Maintenance task. A series of related maintenance procedures with a definite beginning and end.

3.84 Maximum Time to Repair (MTTR). The total elapsed time (clock hours) for corrective maintenance divided by the total number of corrective maintenance actions during a given period of time.

3.85 Mean time between corrective maintenance (MTBCM). For a particular interval, the total functional life of a population of an item divided by the total number of failures within the population during the measurement interval. The definition holds for time, rounds, miles, events, or other measure of life units. (Used only when referring to depot level maintenance.)

3.86 Meantime between failures (MTBF). For a particular interval, the total functional life of a population of an item divided by the total number of failures within the population during the measurement interval. The definition holds for time, rounds, miles, events, or other measure of life units.

3.87 Modified able of organization and equipment (MTOE). A modified version of a TOE that prescribes the unit organization, personnel, and equipment needed to perform an assigned mission in a specific geographical or operational environment.

3.88 Modification work order (MWO). Detailed instructions (including text and graphics) for making changes/improvements to a particular system in order to bring the system up to date and/or to improve its overall efficiency.

3.89 Module. A subassembly that, in the area of electronic systems, may be removed and replaced without use of soldering equipment or special tools; a module may be encapsulated.

3.90 Mouse-over. A program element that triggers a change on an item (typically a graphic change, such as making an image or hyperlink appear) in a viewer when the pointer passes over it. The change usually signifies that the item is a link to related or additional information. Mouse-overs are used in navigation bars, pop-up dialog boxes, window panes, and or in form submissions.

Source: https://assist.dla.mil -- Downloaded: 2016-12-05T17:12Z
Check the source to verify that this is the current version before use.

3.91 National Item Identification Number (NIIN). The last nine digits of the National/NATO stock number. The first two digits of the NIIN identify the country assigning the number and the remaining seven digits are a serially assigned number.

3.92 National Maintenance Work Requirement (NMWR). A maintenance serviceability standard for depot level reparable that do not have an existing depot maintenance work requirement and for field level reparable that are repaired by maintenance activities below the depot level maintainers for return to the Army supply system.

3.93 National Stock Number (NSN). 13-digit number assigned to a repair part to be used for requisitioning purposes.

3.94 Next Higher Assembly (NHA). Assembly or subassembly of which subject component(s) or subassembly are a subpart.

3.95 Nomenclature. The approved name or alphanumeric identifier assigned to an item, equipment, or component in agreement with an organized designation system.

3.96 Nondestructive Testing Inspection (NDTI). Testing of a nature, which does not impair the usability of the item.

3.97 Non-linear IETM. Technical data that is not displayed in a sequential fashion. There are high levels of interactivity between the data and the user. The order of presentation is dictated by inputs from the user, external sources or events (as in diagnostics). An organization of content that does not follow a document or page based paradigm. There are multiple paths through the data. Individual paths through the data are generally determined based on user or other input via dialog boxes.

3.98 Nuclear, Biological, and Chemical (NBC). Reference to decontamination procedures performed on equipment and/or personnel exposed to nuclear, biological, and chemical weapons.

3.99 On-condition maintenance. Maintenance performed or an item replacement action performed based upon condition of the item as determined by an evaluation of each item on a scheduled basis.

3.100 Operator maintenance. Consists of inspecting, servicing, lubricating, adjusting, replacing, and repairing those items authorized by Logistic Management Information (LMI) and/or Maintenance Allocation Chart (MAC).

3.101 Overhaul. That maintenance effort (service/action) prescribed to restore an item to a completely serviceable/operational condition as required by maintenance standards in appropriate technical publications. Overhaul does not normally return an item to like new condition.

3.102 Overhaul Inspection Procedure (OIP). Routine maintenance inspection conducted just prior to period specified for removal of aircraft for overhaul or retirement.

3.103 Pane. Any of the rectangular frames within the main content area of the inner shell into which a computer display can be divided and in which text/graphics/multimedia output can be displayed.

Source: https://assist.dla.mil -- Downloaded: 2016-12-05T17:12Z
Check the source to verify that this is the current version before use.

3.104 Part Number (P/N). A primary number used to identify an item used by the manufacturer (individual, company, firm, corporation, or Government activity) that controls the design, characteristics, and production of the item by means of its engineering drawings, specifications, and inspection requirements.

3.105 Phased maintenance inspection (aircraft). A thorough and searching examination of the aircraft and associated equipment. Removal of access plates, panels, screens, and some partial disassembly of the aircraft is required to complete the inspection. Inspections are due after an appointed number of flying hours since new or from the completion of the last inspection.

3.106 Pictorial. A type of illustration showing the physical appearance of equipment or component parts. This term is used instead of such general terms as illustration, drawing, and diagram.

3.107 Preshop analysis. To determine, prior to beginning maintenance activities, the extent of maintenance required to return the end item, assembly, subassembly, or component to a serviceable condition as specified by the depot level maintenance instructions.

3.108 Preventive maintenance (scheduled maintenance). The performance of scheduled inspections and maintenance functions necessary to keep the equipment in serviceable condition and ready for its primary mission.

3.109 Preventive Maintenance Checklist (PMC). A listing of all before, during, and after operation preventive maintenance checks, including tactical and safety checks, that the operator or crew performs to ensure that the equipment is mission capable and in good operating condition.

3.110 Preventive maintenance daily (aircraft). Inspection of aircraft and associated equipment after the last flight of the mission day or before the first flight of the next day. Some operational checks and removal of screens, panels, and inspection plates may be required to accomplish the inspection.

3.111 Preventive maintenance services inspection (aircraft). Special recurring inspection of aircraft and associated equipment after an appointed number of flying hours or days whichever occurs first (e.g. 10 flying hours or 14 days). Some operational checks and removal of screens, panels, and inspection plates may be required to accomplish the inspection.

3.112 Preventive Maintenance Checks and Services (PMCS). Periodic inspection and maintenance at scheduled intervals to ensure that the equipment and its components remain mission capable and in good operating condition. In aircraft, checks are required of mandatory safety-of-flight items. Lubrication may be included in PMCS. PMCS procedures can be performed by maintainers at any level of maintenance not just by operators.

3.113 Proponent. An Army organization or staff, which has been assigned primary responsibility for material or subject matter in its area of interest.

3.114 Publication Medium. The type of publication (TM, DMWR, NMWR, MWO, SC, SB, TB, etc). This does not include IETM, ETM, or EM.

3.115 Publication Number. The number shown on the cover of each publication as constructed per DA Pam 25-40, e.g., TM 1-1520-238-10.

Source: https://assist.dla.mil -- Downloaded: 2016-12-05T17:12Z
Check the source to verify that this is the current version before use.

3.116 Quality Assurance (QA). A planned and systematic pattern of all actions necessary to provide adequate confidence that the item or product conforms to established technical requirements.

3.117 Rebuild. Consists of those services/actions necessary for the restoration of unserviceable equipment to a like new condition in accordance with original manufacturing tolerances.

3.118 Reference designator. Letters or numbers, or both, used to identify and locate discreet units, portions thereof, and basic parts of a specific equipment, assembly, or subassembly.

3.119 Reliability, Maintainability and Supportability (RMS) and Operational Availability (Ao). Requirements imposed on materiel systems to ensure that they are operationally ready for use when needed, will successfully perform assigned functions, and can be economically operated and maintained within the scope of logistic concepts and policies.

3.120 Reliability Centered Maintenance (RCM). A systematic approach for identifying preventive maintenance tasks for an equipment end item in accordance with a specified set of procedures and for establishing intervals between maintenance tasks.

3.121 Remove/install. To remove and install the same item when required to perform service or other maintenance functions. Install may be the act of emplacing, seating, or fixing into position a spare, repair part, or module (component or assembly) in a manner to allow the proper functioning of equipment or a system.

3.122 Repair. The application of maintenance services (inspect, test, service, adjust, align, calibrate, and/or replace), including fault location/troubleshooting, removal/installation, and disassembly/assembly procedures, and maintenance actions to identify troubles and restore serviceability to an item by correcting specific damage, fault, malfunction, or failure in a part, subassembly, module (component or assembly), end item, or system. Repair is authorized by the LMI/MAC and the assigned maintenance level is shown as the fourth position code of the SMR code.

3.123 Repair part. Those support items that are an integral part of the end item or weapons system, which are coded as not repairable (i.e., consumable items).

3.124 DELETED.

3.125 Replace. To remove an unserviceable spare or repair part and install a serviceable counterpart in its place. Replace is authorized by the LMI/MAC and the assigned maintenance level is shown as the third position code of the SMR code.

3.126 Revision. A revision is comprised of corrected, updated, or additional pages or work packages to the current edition of a manual. It consists of replacement work packages that contain new or updated technical information, or improves, clarifies or corrects existing information in the current edition of the manual.

3.127 Schematic diagram. A graphic representation showing the interrelationship of each component or group of components in the system/equipment. The essential characteristic of these diagrams is that every maintenance-significant functional component is separately represented. Also, where appropriate, voltage readings should be shown.

Source: https://assist.dla.mil -- Downloaded: 2016-12-05T17:12Z
Check the source to verify that this is the current version before use.

3.128 Service. Operations required periodically to keep an item operating, i.e., to clean (includes decontaminate, when required), to preserve, to drain, to paint, or to replenish fuel, lubricants, chemical fluids, or gases.

3.129 Set. A unit and necessary assemblies, subassemblies, and parts connected together or used in association to perform an operational function (e.g., radio receiving set, measuring set, radar, or homing set which includes parts, assemblies, and units such as cables, microphones, and measuring instruments).

3.130 Source, Maintenance, and Recoverability (SMR) code. The five-position code containing supply/requisitioning information, maintenance level authorization criteria, and disposition instruction. The first two positions of the SMR code determine how to get an item. The third position represents who can install, replace, or use the item. The fourth position dictates who can do complete repair on the item. The fifth position represents who determines disposition action on unserviceable items.

3.131 Spare part. Those support items that are an integral part of the end item or weapons system that are coded as repairable (i.e. reparable items). Spares include those equipments authorized by TOE line item plus equipments, assemblies, and modules designated as operational readiness float. TOE training equipment is excluded.

3.132 Special tools. Those tools that have single or peculiar application to a specific end item/system.

3.133 Specialized Repair Activity (SRA). A level of maintenance usually characterized by the capability to perform maintenance functions requiring specialized skills, disciplined quality control, highly sophisticated and expensive special tools, and TMDE. Its phases normally consist of adjustments, calibration, alignment, testing, troubleshooting, assembly, disassembly, fault isolation, and repair of unserviceable parts, modules, and printed circuit boards (PCB).

3.134 Standard Generalized Markup Language (SGML). A language for document representation that formalizes markup and frees it of system and processing dependencies.

3.135 Subassembly. Two or more parts that form a portion of an assembly or a component replaceable as a whole, but having a part or parts that are individually replaceable (e.g., gun mount stand, window recoil mechanism, floating piston, intermediate frequency strip, mounting board with mounted parts).

3.136 Supply Catalog (SC). The DA publication, which is the configuration control document that provides the user identification of Sets, Kits and Outfits (SKO) and its components. It also provides user supply management data and is an accountability aid.

3.137 Sustainment Maintenance. Sustainment is off-system maintenance and is mainly repair of defective equipment/parts. Sustainment maintenance returns repaired equipment/parts to supply system.

3.138 System. A group of items united or regulated by interaction or interdependence to accomplish a set of specific functions.

3.139 Tags. Descriptive markup, as in a start-tag and end-tag.

Source: https://assist.dla.mil -- Downloaded: 2016-12-05T17:12Z
Check the source to verify that this is the current version before use.

3.140 Tailoring. The process of evaluating individual potential requirements to determine their pertinence and cost effectiveness. The tailoring of data requirements is limited to the exclusion of information requirement provisions and selecting or specifying applicable requirements.

3.141 Task. A sequence of user actions with a beginning and an end. User tasks relate to installation, checkout, operation, and maintenance of systems or equipment.

3.142 Technical Manuals (TM). Manuals that contain instructions for the installation, operation, maintenance, and support of weapon systems, weapon system components, and support equipment. TM information may be presented, according to prior agreement between the contractor and the Government, in any form or characteristic, including hard printed copy, audio and visual displays, electronic imbedded media, disks, other electronic devices, or other media. They normally include operational and maintenance instructions, parts lists, and related technical information or procedures exclusive of administrative procedures.

3.143 Test. To verify serviceability by measuring the mechanical, pneumatic, hydraulic, electrical, or electronic characteristics of an item and comparing those characteristics with prescribed standards.

3.144 Test, Measurement, and Diagnostic Equipment (TMDE). Any system or device used to evaluate the operational condition of an end item or subsystem thereof, or to identify and/or isolate any actual or potential malfunction. TMDE includes diagnostic and prognostic equipment, semiautomatic and automatic test equipment (with issued software), and calibration test or measurement equipment.

3.145 Time Between Overhaul (TBO) items. Those items having a definite retirement schedule within a defined overhaul interval, e.g., those items, which must be replaced within a system assembly, subassembly, or component between scheduled overhauls.

3.146 Top-down generation breakdown. The pyramidal breakdown of an end item, with the top item being the complete end item. The process of breakdown is established from the engineering drawing structure in an NHA progression until the lowest reparable in each family tree group is identified. All nonreparables (spare parts) can be identified in like manner to establish their NHA relationships.

3.147 DELETED.

3.148 Usable on code (UOC). A three-position alphanumeric code representing the applicable configuration in which an item is used. When an item is used on all configurations or when only one configuration is covered by the parts information, UOCs should not be shown.

3.149 User. A person using the technical manual.

3.150 Viewer. A program that allows a file to be displayed but not changed. Viewers are often freely distributable and platform independent, even when the editor application is not. This characteristic allows authors to create IETMs with an editor application and make the viewer, which displays the IETM, available to other users.

3.151 Wiring diagram. Diagram illustrating signal flow or wiring connections. Where appropriate, voltage readings should be shown.

Source: https://assist.dla.mil -- Downloaded: 2016-12-05T17:12Z
Check the source to verify that this is the current version before use.

3.152 Work packages (WP). Presentation of information functionally divided into individual task packages in the logical order of work sequence. These WPs should be stand alone general information, description, theory, operating, maintenance, troubleshooting, parts, and supporting information units containing all information required for directing task performance.

3.153 XML Stylesheet Language (XSL). A language for transforming XML documents into other XML documents, such as HTML as specified in REC-xslt-19991116.

4. GENERAL REQUIREMENTS.

4.1 General. This standard provides the technical content requirements and mandatory style, format, and functionality requirements for the preparation of linear and non-linear interactive electronic technical manuals (IETMs) and subsequent revisions covering operation and maintenance, at all levels of maintenance through overhaul (depot), including Depot Maintenance Work Requirements (DMWRs) and National Maintenance Work Requirements (NMWRs). All requirements throughout this standard for depot maintenance or DMWRs shall be followed for NMWRs. IETM functionality requirements are provided in 4.6. Style and format requirements are provided in 4.7. Specific technical content requirements are provided in the following appendixes:

Appendix B	—	General Information, Equipment Description, and Theory of Operation
Appendix C	—	Operator Instructions
Appendix D	—	Troubleshooting Procedures
Appendix E	—	Maintenance Instructions
Appendix F	—	Parts Information
Appendix G	—	Supporting Information

4.2 Types of technical manuals. Appendix A, IETM Functionality and Data Display Requirements and Content Selection Matrixes, lists specific technical content requirements for each type of maintenance manual, including multilevel TMs, covered by this standard. Each type of TM shall provide in detail the maintenance coverage prescribed for the applicable maintenance level(s) by the Maintenance Allocation Chart (MAC) and SMR-coded items.

4.3 Selective application and tailoring. This standard contains some requirements that may not be applicable to the preparation of all technical manuals. Selective application and tailoring of requirements contained in this standard are the responsibility of the acquiring activity and shall be accomplished through the use of the matrixes provided in Appendix A. The applicability of some requirements is also designated by one of the following statements: unless specified otherwise by the acquiring activity; as/when specified by the acquiring activity; or when specified by the acquiring or proponent activity.

4.4 Preparation of digital data for electronic delivery. Technical manual data prepared and delivered digitally in accordance with this standard shall be Extensible Markup Language (XML) tagged using the Document Type Definitions (DTD) and the XML Stylesheet Language (XSL), or style sheets in accordance with MIL-STD-2361. Refer to 4.6 for information on obtaining or accessing the DTD and style sheets. A sample XML source file is provided in MIL-HDBK-1222.

Source: https://assist.dla.mil -- Downloaded: 2016-12-05T17:12Z
Check the source to verify that this is the current version before use.

4.5 Use of the DTD/Style sheets. The DTD referenced in this standard interpret the technical content and structure for the functional requirements contained in this standard and are mandatory for use. Development of IETMs is accomplished through the use of the DTD combined with the guidance contained in MIL-HDBK-1222. The guidance contained in MIL-HDBK-1222 applies unless they conflict with the requirements in this standard. The requirements in this standard take precedence over the guidance contained in MIL-HDBK-1222. A XSL or style sheet is used to interpret the style and format for frame-based screen display. For additional information on DTD and specific XSLs or style sheets, refer to MIL-STD-2361.

4.6 Obtaining the DTD/Style sheets. The DTD, style sheets, associated tag and attribute descriptions, which are XML constructs, may be obtained from the Army SGML Registry and Library (ASRL). The ASRL assets may be obtained using the methods described in MIL-STD-2361 as follows:

a. World Wide Web (WWW): ASRL homepage Uniform Resource Locator (URL) http://www.asrl.com/.

b. U.S. Mail: Requested files will be mailed on CD-ROM DOS formatted or UNIX tar formatted. Requests may be submitted as follows:

Written request:
Director, APD- Army Publishing Directorate
ATTN: JDPSO-PAT-S
2461 Eisenhower Avenue
Alexandria, VA 22331-0302

Telephone Request:
Commercial: (703) 325-6231
DSN: 221-6231

4.7 IETM functionality requirements. The specific level of functionality and user interaction to be provided in IETMs shall be in accordance with the functionality matrixes contained in Appendix A. The mandatory functionality requirements for IETMs provided in Appendix A supplement the technical content requirements provided in Appendix B through Appendix GI. These requirements shall apply for the presentation of technical manual information in a frame-based format on a computer display.

4.8 Technical content, style and format. Additional guidance for style and format for TMs is contained in MIL-HDBK-1222. Guidance for preparation of CD face and flyleaf information is contained in MIL-HDBK-1222. The US Government Printing Office Style Manual shall be used as a general guide for capitalization, punctuation, compounding of words, numerals in text, and spelling of nontechnical words.

4.8.1 Development of work package technical manuals. The style and format guidance provided in this standard has been established to facilitate the development of technical information for the WP concept. The WP concept is defined as a logical combination of requirements and improved presentation techniques designed to enhance digital display of frame-formatted pages. A work package IETM is specifically designed to support individual functional information including troubleshooting and maintenance work tasks for a weapon system or equipment in accordance with the requirements of Appendix B through Appendix GI.

Source: https://assist.dla.mil -- Downloaded: 2016-12-05T17:12Z
Check the source to verify that this is the current version before use.

4.8.2 IETM divisions. The hierarchy of an IETM consists of introductory matter, planning data and a series of work packages that include the types of data listed below.

a. Descriptive information and principles of operation.
b. Troubleshooting information.
c. Procedural information (operator and maintenance tasks).
d. Parts information.
e. Supporting Information.

4.8.2.1 Work packages. Work packages shall be used to logically divide IETM data into functional descriptive or task-oriented information. Refer to Appendix B through Appendix GI for the specific content requirements for each of the functional work package types (i.e., description information, operator's instructions, troubleshooting, maintenance, etc.).

4.8.3 Font size and style. Guidance for font style, size, and spacing guidance refer to MIL-HDBK-1222.

4.8.4 Alerts (Warning or Caution). An alert shall be a warning or a caution. Alerts shall be used only in tasks, procedures and steps. Alerts may be acknowledged. Alerts shall be displayed in-line as a message dialog box or as a pop-up message dialog box (refer to 4.8.4.5). The only push button in the alert message dialog box shall be the “OK” push button which shall be used for acknowledgment.

4.8.4.1 Warning **<warning>**. A warning identifies a clear danger to the person doing that procedure.

4.8.4.2 Caution **<caution>**. A caution identifies risk of damage to the equipment.

4.8.4.3 Display of warnings and cautions.

a. Warnings and cautions shall appear in-line as follows:
   (1) For tasks, they shall follow the title of the associated task.
   (2) For procedures, they shall follow the title of the associated procedure.
   (3) For steps, they shall precede the associated step.
b. If multiple warnings and cautions apply to the same text, warnings shall appear first and cautions shall appear second. If notes (refer to 4.8.5) are also applicable to the text, they shall appear after the applicable warnings and cautions.
c. The **WARNING** or **CAUTION** shall be displayed as shown in FIGURE 1. Headers shall not be numbered. When a warning or caution consists of two or more paragraphs, the header **WARNING** or **CAUTION** shall not be repeated above each paragraph.
   (1) The warning header shall have the word **WARNING** in white text preceded with a white exclamation point surrounded with a black triangle (⚠) and inside a red rectangle box with a black border. Warnings may have safety or hazard icon(s) and shall appear below the warning header. The warning header, icons, text, and “OK” pushbutton shall be enclosed within a larger white box with a red border.

Source: https://assist.dla.mil -- Downloaded: 2016-12-05T17:12Z
Check the source to verify that this is the current version before use.

(2) The caution header shall have the word **CAUTION** in black text preceded with a white exclamation point surrounded with a black triangle (⚠) and inside a yellow rectangle box with a black border. Cautions may have icon(s) depicting equipment damage and shall appear below the caution header. The header, icons, text, and "OK" pushbutton shall be enclosed within a larger white box with a yellow border.

d. Warnings and cautions on unrelated topics that pertain to the same task, procedure or step(s) may be grouped under one heading. When grouping warnings and cautions, each warning or caution shall be separated by at least one line and may be bulleted.

e. Warnings shall include basic first aid instructions/guidance in the event of exposure/injury (e.g., flush eyes with water, seek medical attention, cleanse affected area with soap and water, etc).

4.8.4.4 Acknowledgment of alerts. If acknowledgment of alerts is used, alerts shall be displayed and acknowledged as follows:

a. An "OK" pushbutton in the alert shall be used for acknowledgment. The text following the alert shall not be displayed until the alert is acknowledged. The alerts shall stay in-line after the user acknowledges the alert. All functions (including the scrolling function if provided) shall be disabled until the alert has been acknowledged. FIGURE 2 shows an example of a single alert on a pane with a scrolling function. FIGURE 3 shows an example of single alert on a pane without a scrolling function.

b. When multiple alerts are displayed in the same pane, the "OK" pushbutton in each alert shall be used for acknowledgment. The text following an alert shall not be displayed until that alert is acknowledged (refer to FIGURE 4).

c. When alerts apply to the entire task or procedure, the alerts shall be displayed in-line prior to the applicable data (refer to FIGURE 5).

d. After an alert has been acknowledged, the applicable persistent alert icon shall be displayed in the status bar of the inner shell and remain persistent until the applicable step, task and/or procedure has been completed (refer to FIGURE 2 through FIGURE 5 for examples). Clicking on the persistent alert icon, at any time during the task or procedure, shall display the applicable alert(s).

4.8.4.5 Pop-up Alerts. Alerts may also appear as a pop-up in addition to being displayed in-line. When pop-up alerts are used, they shall be acknowledged using the "OK" pushbutton in the pop-up alert (refer to FIGURE 6). After being acknowledged, the alert shall be displayed in-line and shall not require acknowledgment.

4.8.4.6 Icons **<icon>**. The use of standardized icons to improve readers' recognition of hazards is encouraged. Approved icons for use in technical manual warnings are contained in FIGURE 7 and FIGURE 8. Additional non-standardized warning icons shall be approved by the acquiring activity. Equipment damage caution icons shall be approved by the acquiring activity. Icons used shall be defined in the General Information Work Package under the list of abbreviations/acronyms (refer to B.5.2.13).

4.8.4.6.1 Development of icons. Icons are enclosed in a square or rectangular box (refer to FIGURE 7 and FIGURE 8). The signal word(s) for warning icons appear outside the box placed to the right or below the icon(s). The icons are available online at https://www.logsa.army.mil/mil40051/tmsspecs.htm.

Source: https://assist.dla.mil -- Downloaded: 2016-12-05T17:12Z
Check the source to verify that this is the current version before use.

4.8.4.6.2 Safety warnings with icons <**icon**>. The approved safety warning icons provided in FIGURE 7 can be used in conjunction with the **WARNING** header and description of the hazard (refer to FIGURE 1). For additional information on the use and placement of warnings and icons, refer to requirements specified in 4.8.4.3.

4.8.4.6.3 Hazardous material warnings <**warning**>. Procedures prescribed for the operation and maintenance of equipment are consistent with the safety standards established by the Occupational Safety and Health Act (OSHA) Public Law 91-596 and Executive Order 12196. When exposure to hazardous chemicals or other adverse health factors or use of equipment cannot be eliminated, guidance pertaining to the exposure is included in the TM. A list of personnel protective devices should also be included. Hazardous materials warnings shall be presented in the standard warning format without an icon, or in conjunction with an icon, or a combination of icons (as described in 4.8.4.3). The acquiring activity shall approve the use of icons other than those presented in FIGURE 8. Hazards that result from a combination of materials shall clearly be identified to indicate that mixing or combining the materials creates the hazard.

4.8.4.6.3.1 Format for hazardous materials warnings with icons <**icon**>. Hazardous materials warnings with icons consist of a **WARNING** header (refer to 4.8.4.3.c(1)), the icon(s), and a full description of the hazardous material and the precautions to be taken.

4.8.4.6.3.2 Abbreviated format for hazardous materials warnings with icons <**icon**>. For commonly used substances only (e.g., dry cleaning solvent, hydraulic fluids, paints, etc.), an abbreviated format may be used for hazardous materials warnings. The abbreviated format consists of the **WARNING** header, the icon(s), and the signal word(s) (e.g., ISOPROPYL ALCOHOL, TT-I-735) of the hazardous material. The full hazardous materials warning shall be placed in the warning summary.

4.8.4.6.4 Equipment damage caution icons <**icon**>. The equipment damage caution icons can be used in conjunction with the **CAUTION** header and description of the equipment damage (refer to FIGURE 1). For additional information on the use and placement of cautions and icons, refer to the requirements specified in 4.8.4.3**.**

4.8.5 Notes <**note**>. A note is used to highlight essential procedures, conditions, or statements or convey important instructional data to the user. Notes shall be allowed in tasks, procedures, steps, and non-procedural information. Notes may be acknowledged.

4.8.5.1 Display of notes.

a. Notes shall appear in-line as follows (refer to FIGURE 9):
   (1) For tasks, they shall follow the title of the associated task.
   (2) For procedures, they shall follow the title of the associated procedure.
   (3) For steps, they shall precede the associated step.
b. If multiple notes apply to the same text, the warnings shall appear first, cautions shall appear second, and notes shall appear last.
c. The **NOTE** shall be displayed as shown in FIGURE 1. Headers shall not be numbered. When a note consists of two or more paragraphs, the header **NOTE** shall not be repeated above each paragraph.

Source: https://assist.dla.mil -- Downloaded: 2016-12-05T17:12Z
Check the source to verify that this is the current version before use.

d. The note header shall have the word **NOTE** in blue text inside a white rectangle box with a black border. Notes may have an optional note icon below the note header. The note header, icons, and text shall be enclosed within a larger white box with a blue border.

e. Notes on unrelated topics that pertain to the same task, procedure or step(s) may be grouped under one heading. Each note shall be separated by at least one line and may be bulleted.

f. Notes used in the manual other than a task, a procedure or a step shall have the header **NOTE** in bold and centered above the note text. The note text shall be indented on right and left.

4.8.5.2 Acknowledgment of notes. A note shall be acknowledged if it is deemed important enough by the acquiring activity. The only push button in the note message dialog box shall be the "OK" push button which shall be used for acknowledgment. The note message dialog box shall appear as a pop-up or in-line. Pop-up notes shall also be displayed in-line and the message dialog box for the pop-up shall stay persistent until the user acknowledges the message (refer to FIGURE 10). Unlike warnings and cautions (see 4.8.4), text that follows a note may be viewable prior to acknowledgment and a persistent note icon shall not be displayed in the status bar of the inner shell after the note is acknowledged.

4.8.6 Work packages.

4.8.6.1 Work package identification information <**wpidinfo**>. All work packages shall include the identification information entries in the following sequential order, as applicable.

a. Maintenance levels <**maintlvl**>. The maintenance level(s) shall be included (e.g., field maintenance).

b. WP title <**title**>. The title of the individual work package shall be listed (i.e., M144 Shop Van Semitrailer General Information).

c. Effectivity notice <**appconfig**>. If applicable, an effectivity notice shall be included. When the work package does not apply to all configurations of the weapon system/equipment, the applicable configurations <**name**> covered by the work package shall be listed. Omit this requirement if the same tasks/procedures apply to all configurations. (If certain configurations require different tasks/procedures, separate work packages shall be prepared.)

d. DELETED.

e. Joint use. When TMs are acquired and specified by the Army for joint use with another or other Services (Joint Service TMs), work packages in joint publications which do not apply to all Services concerned shall be marked to indicate the Services to which they apply (for example, LANDING GEAR MAINTENANCE (ARMY ONLY)). This data need not be displayed on the user's viewer.

4.8.6.1.1 Display of Work Package Identification Information. Work package identification information shall be displayed as follows:

a. If context filtering/login is used in the IETM, only the work package title shall be displayed in the title bar. The other work package identification information shall be in the source data but shall not be displayed.

Source: https://assist.dla.mil -- Downloaded: 2016-12-05T17:12Z
Check the source to verify that this is the current version before use.

b. If filtering/login is not used in the IETM, the work package title shall be displayed in the title bar and the other work package identification information shall be displayed in the inner shell.

4.8.6.2 Initial setup information **<wpinfo>**. Unless otherwise specified herein, all work packages shall contain initial setup instructions. A sample is provided in MIL-HDBK-1222. When no initial setup instructions are required to perform operating tasks, the title **INITIAL SETUP** shall be included with the words "**Not Applicable**". It provides the maintenance technician with general information, equipment, parts, material, and authorized personnel required to perform and complete all the operating tasks included in the work package. As appropriate, links shall be established to all supporting information items. Setup information requirements are described below:

a. Test equipment <**testeqp**>. All test equipment required to perform the procedure shall be listed by name <**name**>, and linked to containing the required test equipment item <**itemref**>. Linking will eliminate the need to repeat or update the part and model numbers throughout the IETM.

b. Tools and special tools <**tools**>. The tool kit (box) assigned to the mechanic (on a 1-per-mechanic-by-MOS basis) to be used in maintenance of a particular equipment shall be listed by name <**name**>, and linked to the required tools and special tools items <**itemref**>. No tool in the kit shall be further identified. Other tools required for performance of all tasks for the maintenance levels covered in the work package shall also be linked to the initial setup. "Other tools" includes tools that are part of/components of shop sets authorized to sections/teams; tools authorized by parts information and CTA-50-909; CTA 50-970; special and fabricated tools; and items of Test, Measurement, and Diagnostic Equipment (TMDE). Linking will eliminate the need to repeat or update the part and model numbers throughout the IETM.

c. Materials/parts <**mtrlpart**>. All expendable items and support materials, mandatory parts, bulk items, and flight safety critical aircraft parts shall be listed by, as a minimum, name **<name**>, quantity **<qty**>, if applicable, and linked to the required items **<itemref**>, if applicable. Linking will eliminate the need to repeat the part and numbers throughout the IETM. For example,

Material/Parts

Grease

Range lock

Frequency Converter

Bracket Assembly, Chemical Alarm

Clamp, Loop, (TM 11-1520-238-23P, Group 110503)

Source: https://assist.dla.mil -- Downloaded: 2016-12-05T17:12Z
Check the source to verify that this is the current version before use.

d. Personnel required <**persnreq**>. Personnel <**name**> and the number of personnel <**qty**> shall be identified if the task requires more than one. The Military Occupational Specialty (MOS) designation <**mos**> is not necessary, but it may be included. For example,

Personnel Required

Artillery Mechanic 68M10 (1)
Artillery Mechanic 66J30(1)

e. References <**ref**>. When necessary, other work packages, TMs, foldouts, and other sources (<**link**>/<**extref**>/<**xref**>) that are needed to complete the operating tasks shall be listed and linked here. Only references not listed in equipment conditions shall be listed. For example,

References

TM 9-1015-252-20&P

Engine Shutdown

f. Equipment conditions <**eqpconds**>. Any special equipment conditions required before the procedure can be started shall be listed and linked to the appropriate source <**link**>, <**extref**>, or <**xref**> for setting up the condition <**condition**>. For example,

Equipment Condition

Firing mechanism removed

g. Special environmental conditions <**specenv**>. Any special environmental conditions (such as ventilation, lighting, or temperature) <**condition**> that are required shall be listed and may be linked to here. The reason <**reason**> that such conditions are needed shall be explained. For example,

Special Environmental Condition

Darkened area required for testing lights.

h. Drawings required <**dwgreq**>. When necessary, all drawings (which are not included in the work package) required to complete the maintenance tasks shall be listed and may be linked to here. Drawings shall be listed by title <**dwgname**> and drawing number <**dwgno**>. For example,

Drawings Required

Power Supply Schematic (132E470092)

i. Estimated time to complete the task <**time.to.complete**>. If required by the acquiring activity, the estimated time it will take to complete the operating task shall be included. Approved Logistics Management Information (LMI), and service experience, performance data on similar equipment, and all other reliability, availability, and maintainability (RAM) data available shall be used to estimate the time required to complete the task. For example,

Time to Complete

8 Hours

Source: https://assist.dla.mil -- Downloaded: 2016-12-05T17:12Z
Check the source to verify that this is the current version before use.

4.8.7 Work packages. Each work package shall include the work package identification information described in Appendix B through Appendix GI, as applicable. Work package identification information shall be displayed in the title bar area of the user's viewer.

4.8.7.1 Work package identification number. A unique number shall be assigned to each work package. This identifier may be used for database retrieval purposes. The WP identification number shall not appear on the user's viewer. It shall be assigned when preparing the document instance in accordance with the modular DTD and shall not be changed throughout the life of the WP. The WP identification number shall consist of an alpha designation for the type of information contained in the work package, a five digit block number assigned by the acquiring activity, and the TM number less the maintenance level dash numbers. The TM number is used only to provide uniqueness and avoid duplication of a WP identification number, other than that it shall not have significance. When reusing a WP, the same WP identification number shall be used from TM to TM.

a. The following alpha designators shall be assigned to the specific types of information contained within the work packages.

G	Descriptive information and theory of operation
I	Inspection
O	Operator instructions
T	Troubleshooting procedures
M	Maintenance instructions
R	Parts information
S	Supporting Information

b. Examples of work package data base identification numbering are shown below.

M00432-9-1425-646

M	Identifies a WP containing maintenance instructions.
00432	Identifies the 432nd work package containing specific maintenance instructions for the M270 Armored Vehicle Mounted Rocket Launcher.
9-1425-646	Identifies the M270 Armored Vehicle Mounted Rocket Launcher TM.

T02000-1-1520-238

T	Identifies a WP containing troubleshooting procedures.
02000	Identifies the 2000th work package containing specific troubleshooting procedures for the AH-64A Helicopter.
1-1520-238	Identifies the AH-64A Helicopter TM.

Source: https://assist.dla.mil -- Downloaded: 2016-12-05T17:12Z
Check the source to verify that this is the current version before use.

4.8.8 Maintenance tasks and descriptive information. Procedural maintenance tasks or descriptive information contained in a WP shall have a paragraph title. When it is necessary to divide a maintenance task into subtasks, for clarity, subparagraph titles shall be used (refer to 4.8.9.2). The words "**END OF TASK**" shall be placed at the end of any procedure within a work package. For parts information the words "**END OF FIGURE**" shall be placed at the end of each parts list. The words "**END OF WORK PACKAGE**" shall be placed below the last data item (i.e., text, illustration, etc.) at the end of any WP, except the following parts information WPs; Repair Parts List, Kits Part List, Bulk Items, Repair Parts for Special Tools List, and Special Tools List the words "**END OF FIGURE**" shall be placed after the parts list.

4.8.9 Paragraphs.

4.8.9.1 Paragraph numbering. Paragraphs and subparagraphs within a WP shall be unnumbered.

4.8.9.2 Paragraphs and subparagraph titles. Paragraphs and subparagraphs shall have titles. The title shall begin at the left margin. Paragraph requirements shall be as follows:

a. Primary paragraph plus 4 subparagraph levels.
b. Multiple primary paragraphs in a WP.
c. Multiple blocks of text under a title are allowed.
d. When a paragraph is continued on subsequent pages, the first level paragraph title shall be placed at the top of those pages (e.g., REMOVAL - Cont).

4.8.9.2.1 Format.

a. Primary Paragraph - Paragraph shall be flush left. Title shall be bold and capital case. Block text shall start on a separate line and shall have a blank line between title and text block
b. Subparagraph Level 1 - Paragraph shall be flush left. Title shall be bold and title case. Block text shall start on a separate line and shall have a blank line between title and text block
c. Subparagraph Level 2 - Paragraph shall be flush left. Title shall be bold, title case, and end with a period. Block text shall start immediately after the title
d. Subparagraph Level 3 - Paragraph shall indent first line 5 spaces and the remaining text flush left. Title shall be bold, title case and end with a period. Block text shall start immediately after the title.
e. Subparagraph Level 4 - Paragraph shall indent first line 10 spaces and the remaining text flush left. Title shall be bold, title case and end with a period. Block text shall start immediately after the title.

4.8.10 Procedural steps. Procedural steps shall be used to present detailed step-by-step instructions for performing an operational or maintenance task. When subordinate steps are used in combination with an expert step, the subordinate steps should appear indented under the expert step on the user's viewer. Novice subordinate steps may be scrollable on the user's viewer.

Source: https://assist.dla.mil -- Downloaded: 2016-12-05T17:12Z
Check the source to verify that this is the current version before use.

4.8.10.1 Procedural step levels. When required, procedural steps shall be divided into no more than six levels. The following demonstrates, by example, how procedural steps and subordinate steps levels shall be formatted and numbered.

EXAMPLE:

1. Primary procedural step number (1, 2, 3, etc.) is flush left. Text begins two spaces after the period following the numeral. The text is blocked.
   a. The first-level procedural subordinate step letters, (a, b, c, etc.), are immediately below the text of the first-level procedural steps. The text is blocked. If additional subordinate step letters are required, use aa., ab., etc. after z.
      (1) The second-level procedural subordinate step numbers, ((1), (2), (3), etc.), are immediately below the text of first-level procedural subordinate steps. The text is blocked.
         (a) The third-level procedural subordinate step letters, ((a), (b), (c), etc.), are immediately below the text of second-level procedural subordinate steps. The text is blocked. If additional subordinate step letters are required, use (aa), (ab), etc., after (z).
            1 The fourth-level procedural subordinate step numbers, (1, 2, 3, etc.), are immediately below the text of third-level procedural subordinate steps. The text is blocked.
               a The fifth-level procedural subordinate step letters, (a, b, c, etc.), are immediately below the text of fourth-level procedural subordinate steps. The text is blocked. If additional subordinate step letters are required, use aa, ab, etc., after z.

4.8.10.2 Procedural step titles. Procedural steps shall not have titles.

4.8.11 Tables and lists.

4.8.11.1 Table numbering. Tables which will be referenced or listed in the table of contents shall be numbered. Table numbers shall be consecutive within each WP in the order of their reference starting with Arabic number 1. If only one table is referenced in a WP, it shall be numbered.

4.8.11.2 Table titles. Tables which will be referenced or listed in the table of contents shall have a title. The titles shall identify the contents or purpose of the table and distinguish that table from others in the TM. The table title shall appear above the table. If a table is scrollable, the table shall have "sticky" column headers. Preferred table title format is provided in MIL-HDBK-1222.

4.8.11.3 Footnotes to tables. There shall be no footnotes in tables. Footnote data shall be linked using a hotspot or mouse-over technique.

4.8.11.4 Lists. Lists may be used in lieu of tables, when appropriate. Lists may be unnumbered, numbered sequentially, or lettered alphabetically. They may have an optional title. Three types of lists are identified below.

a. Definition list. The definition list shall consist of the term and the definition. The definition list may have headers such as "**Term**" and "**Definition**" above the appropriate sections of the list.

b. Random list. The random list shall consist of one or more items in a random order.

Source: https://assist.dla.mil -- Downloaded: 2016-12-05T17:12Z
Check the source to verify that this is the current version before use.

c. Sequential list. The sequential list shall consist of one or more items in a specified order, such as alphabetic, numeric, or alphanumeric.

4.8.12 Standard information. Data designated as "standard information is provided below. The standard information specified data shall have no deviation to the content requirements including the use of standard headings. The standard information shall be presented (i.e. table, form, etc.) as prescribed by the acquiring activity, refer to MIL-HDBK-1222 for examples.

a. Controls and Indicators (Appendix C, Operator Instructions)
b. Checking Unpacked Equipment (Appendix E, Maintenance Instructions)
c. Preventive Maintenance Checks and Services (PMCS) (Appendix E, Maintenance Instructions)
d. Classification of Material Defects (Appendix E, Maintenance Instructions)
e. Overhaul and Retirement Schedule (Appendix E, Maintenance Instructions)
f. Depot Mobilization Requirements (Appendix E, Maintenance Instructions)
g. Repair Parts List (Appendix F, Parts Information)
h. Special Tools List (Appendix F, Parts Information)
i. NSN Index (Appendix F, Parts Information)
j. Part Number Index (Appendix F, Parts Information)
k. Reference Designator Index (Appendix F, Parts Information)
l. Standard Two-level Maintenance Allocation Chart (MAC) (Appendix G, Supporting Information)
m. Aviation Two-level Maintenance Allocation Chart (AMAC) (Appendix G, Supporting Information)
n. Tools and Test Equipment Requirements for (MAC/AMAC and two level MAC) (Appendix G, Supporting Information)
o. Remarks (MAC/AMAC) (Appendix G, Supporting Information)
p. Expendable and Durable Items List (Appendix G, Supporting Information)
q. Mandatory Replacement Parts List (Appendix G, Supporting Information)
r. Component of End Items (COEI) List (Appendix G, Supporting Information)
s. Basic Issue Items (BII) List (Appendix G, Supporting Information)
t. Additional Authorization List (AAL) (Appendix G, Supporting Information)
u. Tools Identification List (Appendix G, Supporting Information)
v. Flight Safety Critical Aircraft Parts (FSCAP) (Appendix G, Supporting Information)

4.8.13 Display of text. All descriptive information and task text shall be displayed in accordance with Appendix A and examples in MIL-HDBK-1222.

4.8.14 Display of illustrations. Illustrations shall be displayed on the user's viewer in accordance with Appendix A and examples in MIL-HDBK-1222.

Source: https://assist.dla.mil -- Downloaded: 2016-12-05T17:12Z
Check the source to verify that this is the current version before use.

4.8.15 Abbreviations and acronyms. Acronyms, abbreviations, and unusual terms may be used in any WP text, when applicable. It is not necessary to spell out the acronyms, abbreviations or uncommon terms. Acronyms, abbreviations, and uncommon terms shall be spelled out in a list that is contained in the General Information work package (refer to B.5.2.13). When directed by the requiring activity, the spelled-out version of the acronym or abbreviation can be displayed by using a mouse-over technique or a link to the acronyms, abbreviations, and uncommon terms provided in the General Information work package (refer to B.5.2.13).

a. Abbreviations and acronyms, which are accepted as words (radar, sonar, laser, etc.) need not be included.
b. Abbreviations and acronyms used shall be in accordance with ASME Y14.38, except that abbreviations may be plural (s) or possessive ('s). New abbreviations and acronyms shall not duplicate those presently listed in ASME Y14.38 where possible.
c. When abbreviations or acronyms are used as markings on the equipment (placarding), the same abbreviations or acronyms shall be used in the IETM.

4.8.16 Symbols.

4.8.16.1 General information for symbols. All nonstandard symbols shall be defined in the list of abbreviations and acronyms contained in the General Information work package (refer to B.5.2.13). New symbols shall not duplicate those presently listed in ASTM-F856 where possible.

4.8.16.2 Metric symbols. Metric symbols shall be in accordance with IEEE 945-1984.

4.8.17 Nuclear hardness (hardness-critical processes) marking. All Hardness-Critical Processes shall be preceded with the acronym "**HCP**". Use of the acronym is as follows.

a. When the entire task and all steps relate to establishing nuclear hardness, the **HCP** acronym shall precede the first step of the task.
b. When the entire task and steps do not contribute to establishing nuclear hardness, only those that do contribute shall be annotated with the **HCP acronym**.
c. Operating or maintenance actions which could degrade hardness, but which are not directly involved in establishing nuclear hardness, shall not be annotated with the acronym **HCP**, but shall be preceded by a caution.

4.8.18 Electrostatic Discharge (ESD) sensitive marking. All paragraphs addressing handling or maintenance which could damage **ESD** sensitive parts shall be marked with the acronym **ESD** as shown below. The acronym shall be prepared in boldface type and in the same style and size as the adjacent text. The acronym shall not be shown with the titles in the table of contents. Use of the acronym is as follows,

a. When the entire task and all subordinate paragraphs and steps relate to ESD sensitive parts, the acronym **ESD** shall precede the task title. (For example, **ESD DISASSEMBLY**.)

Source: https://assist.dla.mil -- Downloaded: 2016-12-05T17:12Z
Check the source to verify that this is the current version before use.

b. When the entire task and subordinate paragraphs and steps are not directly related to **ESD** sensitive parts, only those which do apply shall be annotated with the acronym **ESD**. For example,

REMOVAL

1. _____

2. ESD _____

c. Handling or maintenance actions which could damage **ESD** sensitive parts, but which are not directly related to handling or maintenance of ESD sensitive parts, shall not be annotated with the acronym **ESD**, but shall be preceded by a caution.

d. Mark figures, drawings, and schematics with the **ESD** acronym in accordance with MIL-STD-1686.

4.8.19 Quality Assurance (QA). Depot and aviation maintenance procedures, which have a quality assurance impact, shall be identified by **QA** in boldface letters preceding the text. Only procedures at the step level shall be labeled with **QA**. (For example, 1. **QA)**

4.8.20 Security classification and protective markings. When specified by the acquiring activity, a classified IETM shall be prepared. The security classification markings for classified IETMs, shall be identified in accordance with DoD 5200.1-R and DoD 5220.22-M, Executive Order 12958 and the requirements in Appendix A. For guidance on classification and handling restrictive markings on Compact Disk-Read Only Memory (CD-ROM), refer to MIL-HDBK-9660.

4.8.21 Referencing.

4.8.21.1 Other documents. When authorized by the acquiring activity, reference shall be made only to other documents available and authorized to the user. Reference shall be made by publication number. References to pending publication actions shall not be made.

4.8.21.2 Government specifications and standards. When authorized by the acquiring activity, reference shall be made to the basic publication number for Government specifications and standards.

4.8.21.3 Within the IETM. When it becomes necessary to reference to other work packages, descriptive information, maintenance tasks, or other data within the same IETM, it shall be linked and referenced by title, appropriate text or icon. If referenced by title, the title shall be the same as the title of the WP.

4.8.21.4 Equipment, components, and parts. Reference to parts of the equipment and to equipment components may be by nomenclature, model, type, or reference designator. The referenced items may be linked to a graphic for identification and location.

4.8.21.5 National Stock Numbers (NSNs) and Part Numbers (P/Ns). NSNs and part numbers shall not be included in any text, tables, or illustration contained in a work package. NSN and part number information for all equipment, components and parts shall be accessible at any point in the presentation of WP text, tables and illustrations, when necessary, for the purpose of identification and parts ordering.

Source: https://assist.dla.mil -- Downloaded: 2016-12-05T17:12Z
Check the source to verify that this is the current version before use.

4.8.21.6 Equipment panel markings (placarding). Reference shall be made to panel markings and switch positions exactly as marked on the equipment. However, symbols on panel markings shall be spelled out when they cannot be produced by the software, composing equipment, or printers used in producing the manual, such as the symbol for ohm, infinity, etc.

4.8.21.7 Metric and U.S. standard measurements. Unless specified otherwise by the acquiring activity, all measurements shall be expressed in both U.S. standard units (e.g., ounces, pounds, gallons, inches, feet, knots, miles, etc.) and metric units. U.S. standard measurements shall be followed by the metric conversion in parentheses unless the equipment, instrument, or tool, etc., is calibrated in metric units. In that case, metric units shall be first, followed by the U.S. standard units. (For example, "169.5 Nm (125 lb-ft)".)

4.8.21.8 Temperature. Reference shall be made to temperature readings as calibrated on the equipment. If other than Fahrenheit, the equivalent in Fahrenheit shall follow in parentheses. General temperature references, such as room temperature, shall be given in degrees Fahrenheit (for example, 78°F).

4.8.21.9 Other TMs/IETMs. When it becomes necessary to reference to other work packages, descriptive information, maintenance tasks, or other data contained in another TM/IETM, it shall be by the TM number, as a minimum. The reference shall be linked when the referenced data is on the same CD or within the CD set for the system.

4.8.21.10 Tables. Tables shall be linked to the appropriate text and displayed when they do not already appear in a pane on the user's viewer.

4.8.21.11 Figures. Figures shall be linked to the appropriate text or index number and displayed when they do not already appear in a pane on the user's viewer.

4.8.21.12 Index numbers. Unless specified otherwise by the acquiring activity, figure and index numbers shall be used in text to identify items and parts on illustrations. For example,

> “Remove safety disc (Figure 1, Item 3) and safety disc washer (Figure 1, Item 4) from valve body (Figure 1, Item 2).”

4.8.21.13 Items on diagrams. Reference shall be made to parts on diagrams by enough of their description or reference designator to identify the item (for example, resistor A6R11).

4.8.21.14 Footnotes. Footnotes shall not be used in IETMs. Mouse over techniques or links shall be used in lieu of footnotes.

4.8.22 Equations. The use of equations shall be held to the minimum use required by the needs of the TM user.

4.8.23 Nomenclature.

4.8.23.1 Nomenclature consistency and applicability. Nomenclature, other terms, and names shall be consistent within a manual and other directly related manuals. Statements that explain applicability for individual items of equipment shall use specific serial numbers, block designations, model designations, or similar identification. Such terms as "on later equipment" and "on early serial numbers" shall not be used.

Source: https://assist.dla.mil -- Downloaded: 2016-12-05T17:12Z
Check the source to verify that this is the current version before use.

4.8.23.2 Official/approved nomenclature. Unless specified otherwise by the acquiring activity, only approved names and official nomenclature shall be used. (Official nomenclature shall be the nomenclature used in the parts information.) If unofficial nomenclature (common name) is approved, the common name shall be included in the parts information. Approved nomenclature shall be used wherever the use of a common name might be ambiguous.

4.8.23.3 Military terms. Military terms used shall be in accordance with Joint Pub 1-02, or any approved dictionary or glossary of Army military terms.

4.8.23.4 Automatic electronic test and checkout terminology. Terms used for automatic electronic test and checkout shall be in accordance with MIL-STD-1309.

4.8.24 Comprehensibility. Technical manuals shall be written for the target audience.

4.8.25 Multimedia presentation. Audio, video, and animation techniques shall only be used in an IETM when it results in enhancing the presentation of the information or makes the procedures more effective. Every instance of use must be discussed with and approved by the acquiring activity before any audio, video, or animation presentation is included in an IETM. Multimedia standards to be used for presentation techniques shall be as specified by the acquiring activity in accordance with AR 25-30. A list of preferred formats is provided in MIL-HDBK-1222. Multimedia shall never be the primary means of presenting information. See paragragh A.4.4.5 for requirements for multimedia links.

4.8.26 Graphics.

4.8.26.1 Graphic format. Graphics formats shall be as specified by the acquiring activity in accordance with AR 25-30. A list of preferred formats is provided in MIL-HDBK-1222.

4.8.26.2 Types of graphics. As applicable, the following types of graphics shall be used in the preparation of IETMs. Preferred format of these graphics and typical examples are provided in MIL-HDBK-1222.

a. Line drawings.
b. Photographs.
c. Engineering drawings.
d. Diagrams.
e. Charts and graphs.
f. Tools and test equipment illustrations.

4.8.26.2.1 Line drawings. Line drawings including exploded views, locator views, and detailed views shall be used to support the operational, troubleshooting, and maintenance procedures. Examples of line drawings are provided in MIL-HDBK-1222.

a. When index numbers are used to locate and identify equipment components or parts, the index numbers shall be assigned in clockwise sequence (beginning at 11 o’clock except for graphics for PMCS procedures). See MIL-HDBK-1222 for example of callouts starting at 11 o'clock.
b. To assist the maintenance technician or operator in locating major components, controls and indicators, etc., locator views may be included.
c. When the illustration does not adequately or clearly depict the subject matter or part(s), specific detailed views may be included to support the main illustration.

Source: https://assist.dla.mil -- Downloaded: 2016-12-05T17:12Z
Check the source to verify that this is the current version before use.

4.8.26.2.2 Multiview illustrations. Multiview illustrations may be used to clarify, identify significant features, or further detail equipment assemblies, subassemblies, and detailed parts. Refer to MIL-HDBK-1222 for examples of multiview illustrations.

4.8.26.2.3 Photographs. Photographs, film or digital, may be used for illustrations when a photograph provides for better clarity than a line drawing. All photographs, regardless of source, shall be delivered as digital photographs. The acquiring activity shall determine acceptability of photographs and usage of line drawings.

4.8.26.2.3.1 Photograph quality. If used, photographs shall be detailed and sharp, free of heavy shadows, distorted objects, cluttered foregrounds and backgrounds, and of good contrast. Photographs shall provide sufficient detail for the user to clearly identify all components. Photographs shall be of sufficient resolution to allow a reasonable level of user zooming in the IETM without loss of detail.

4.8.26.2.3.2 Retouching. Photographic retouching shall be held to a minimum. Retouching shall be used only to emphasize detail, exclude unwanted detail, correct slight photographic defects and eliminate undesirable shadow from that portion of the photograph related to the text only.

4.8.26.2.3.3 Use of photographs in place of line drawings. For photographs that cannot meet the requirements specified above, line drawings shall be prepared and used.

4.8.26.2.4 Engineering drawings. Engineering drawings may be used with the approval of the acquiring activity. Engineering drawings are controlled documents and when used, they shall be used in their entirety, without modification. They must be reduced or redrawn to meet page size restrictions. When the controlled elements of an engineering drawing (i.e., title block, sources of supply, revision data, etc.) are removed, leaving only the "field" of the drawing, it is treated as a typical line drawing.

4.8.26.2.5 Diagrams.

4.8.26.2.5.1 Diagram specifications. Diagrams shall be prepared in accordance with the specifications listed below.

Subject	**Equipment Covered**	**Specification**
Abbreviations	All	ASME Y14.38
Engineering Drawing	All	ASME Y14.100
Graphic Symbols	Electrical and Electronic	IEEE 315A-1986, IEEE 280-1985
	Mechanical	ASTM-F856
	Digital (Logic)	IEEE 91-1991
	Fluid Power	ANSI Y32.10
Unit Symbols	All	IEEE 260.1-2004
Logic	All	IEEE 91-1991

4.8.26.2.5.2 Types of diagrams. The following types of diagrams may be included in the IETM. Refer to MIL-HDBK-1222 for examples of types of diagrams. Additionally, when authorized by the acquiring activity, specific types of diagrams such as schematic and wiring diagrams may be provided in a paged-based paper format and supplement the IETM.

a. Block diagrams.
b. Schematic diagrams.
c. Pictorial diagrams.

Source: https://assist.dla.mil -- Downloaded: 2016-12-05T17:12Z
Check the source to verify that this is the current version before use.

d. Cutaway diagrams.
e. Logic diagrams.
f. Wiring diagrams/wire lists.
g. Cable diagrams.
h. Piping diagrams.
i. Test setup diagrams.

4.8.26.2.6 Tools and test equipment illustrations. Only uncommon or unusual uses and connections for test purposes shall be illustrated if it is essential to do so to avoid misunderstanding. Unusual operations shall also be illustrated. Special tools and test equipment shall be illustrated, as applicable. Standard tools and test equipment shall not be illustrated, nor shall self-evident or generally known uses be shown.

4.8.26.3 Elements of illustrations.

4.8.26.3.1 Border rules and boxes. Border rules and boxes shall not be used for single illustrations, but are used to separate multi-section illustrations in the same pane or for locator/detail views (refer to MIL-HDBK-1222 for an example of border rules and boxes.

4.8.26.3.2 Use of the human figure. When necessary, illustrations may include a human figure or parts of the body. Jewelry shall not appear in any illustration. The human figure shall not be permitted to obscure details of the equipment necessary for a complete understanding of its operation. The human figure shall be clothed as designated by the acquiring activity. A cross section of races and sexes shall be used

4.8.26.3.3 Credit lines.

a. The photographer's or illustrator's name shall not appear on any illustration.
b. A manufacturer's name, symbol, or trademark shall not appear on illustrations for the purpose of identifying the illustration.

4.8.26.3.4 Callouts. Index numbers, reference designators, nomenclature, leader lines, sweep arrows, legends, and other identifiers shall be used, when necessary, to identify significant features. Both index numbers and nomenclature can be used in the same document. However, they shall not be used together in the same illustration. When hotspot techniques are used in conjunction with callouts, an explanation shall be provided in the "how to use" portion of the IETM. Refer to MIL-HDBK-1222 for examples of the use of these types of identifiers.

4.8.26.3.4.1 Index numbers. Index numbers shall start with Arabic numeral 1 and continue consecutively within an illustration. For multisheet illustrations, index numbers continue in sequence from one sheet to another.

a. Index numbers shall be in clockwise sequence (beginning at 11 o'clock except for graphics in PMCS procedures). See MIL-HDBK-1222, Figure 15 for example of callouts starting at 11 0'clock.
b. Within a multisheet illustration, if an item that already has been assigned an index number is used in more than one illustration in that multisheet illustration, it must retain the same index number.
c. All items shown as exploded shall be identified. Items drawn in phantom need not be identified.

Source: https://assist.dla.mil -- Downloaded: 2016-12-05T17:12Z
Check the source to verify that this is the current version before use.

d. Index numbers shall not be contained within circles.

4.8.26.3.5 Leader lines and arrowheads. Leader lines shall be uniform, short, and as straight as possible; avoid the use of dogleg-shaped lines unless absolutely necessary. Arrowheads may be added for clarity. Do not allow leader lines to touch the callout. Do not allow arrowheads to enter the object to which they apply. If it is necessary to enter the object to provide for greater clarity, a break off symbol shall be used in lieu of an arrowhead.

4.8.26.3.6 Illustration legends. Illustration legends may be used but their use is discouraged. Legends shall be part of the illustration and shall not be placed in the text area. Refer to MIL-HDBK-1222 for example of a legend.

4.8.26.3.7 Procedures on illustrations. Procedural steps shall not be placed on illustrations.

4.8.26.4 Graphic techniques. In addition to the graphic techniques provided in 4.8.26.4.1 through 4.8.26.4.6, refer to MIL-HDBK-1222 for suggested graphic techniques used for the preparation of U.S. Army IETMs.

4.8.26.4.1 Figure numbers. Figure numbers shall be included on all illustrations except inline graphics (example equation). Figures shall be numbered using Arabic numbers sequentially within each work package starting with the Arabic numeral 1. The figure number shall precede the title. The figure number and title shall not be an integral part of the figure. The figure number and title shall be separated from the graphic so the text can have the capability of being searched.

4.8.26.4.2 Parts information figure numbering. Figures for parts information shall be numbered sequentially within the parts information (not within each work package) using Arabic numerals beginning with 1. Multisheet parts information illustration shall be used as specified by the acquiring activity and shall be numbered as described in 4.8.26.4.3.

4.8.26.4.3 Multisheet numbering. Multisheet figures shall be consecutively sheet numbered and the total number of sheets following the title; for example, “Figure 2. Wing Hydraulic Assembly (Sheet 1 of 3).” or “Figure 1. Cable Assembly W12 Wiring Diagram (Sheet 1 of 2).” Remaining sheets shall be numbered in consecutive order, Sheet 2 of x, Sheet 3 of x, etc. (where x is the total number of sheets). A sample multisheet illustration is provided in MIL-HDBK-1222.

4.8.26.4.4 Figure titles. Each illustration, except inline graphics (example equation), shall have a figure title.

4.8.26.4.5 Illustration identification numbers. Each unique illustration shall be assigned a unique identification number provided by the proponent activity.

a. Contractor's identification number may be used when approved by the proponent activity.
b. When the illustration is displayed, the identification number shall not appear in the display.

4.8.26.4.6 Portraying signal flow. Signal flow, especially for electrical and electronic equipment, critically affects the understandability of diagrams. To assist the IETM user in following the diagram, where possible, major signal or pressure flow shall be from left to right, and feedback or return flow shall be from right to left. Animation or color may be used to indicate signal flow.

Source: https://assist.dla.mil -- Downloaded: 2016-12-05T17:12Z
Check the source to verify that this is the current version before use.

4.8.27 Revisions for IETMs.

a. Each revision to an IETM shall be identified by a revision date.
b. When updates to an IETM are made, the entire IETM shall be revised and reissued.
c. When an IETM is revised and reissued, revision summary information shall be included (refer to e).
d. IETMs shall be revised to the latest standard when 50 percent or more of the data is changed.

4.8.27.1 Revision symbols for text and tables. Revision symbols shall be inserted to identify technical updates in text and tables.

a. Updates to the text and tables shall be indicated by a vertical bar (revision bar) opposite the updated, deleted, or added text (except as noted below). If an entire work package is updated, a change bar shall be placed to the left pf the work package title.
b. A revision bar shall be placed to the left of the table title only if the table title is changed or a new table is added.
c. Revision symbols from a previous revision shall be deleted when a frame is subsequently updated. Symbols shall show current dates only.
d. Revision symbols are not required for correction of minor inaccuracies, such as spelling, punctuation, relocation of material, renumbering, etc., unless such correction changes the meaning of the information.

4.8.27.2 Revision symbols for illustrations. Unless specified otherwise by the acquiring activity, a miniature pointing hand may be used for illustrations (other than diagrams and schematics) to highlight the area containing the revised information.

a. Revisions confined to the same general area shall be indicated only once on the illustration.
b. A vertical bar next to revised callouts on illustrations may be used in lieu of a pointing hand.
c. A vertical bar shall be placed next to graphic if the miniature pointing hand is not used.
d. As specified by the acquiring activity, screens (shading), screened (shaded) boxes, or miniature pointing hands should be used to highlight updated areas of diagrams and schematics.
e. If a callout is deleted from an illustration, the word “DELETED” may be placed after the appropriate number in the legend, if applicable. If a callout is deleted from an illustration without a legend, such as those used to supplement parts information, the word “DELETED” may be placed on the illustration at the end of the leader line.
f. When an illustration is changed, index numbers added between existing numbers may be the same as the preceding index number with added alpha characters (e.g., 22A, 22B). This system may also be used in basic manuals when errors are discovered so late in preparation that renumbering of all following index numbers would delay submittal. Index numbers with added alpha characters shall be eliminated for a complete revision.

Source: https://assist.dla.mil -- Downloaded: 2016-12-05T17:12Z
Check the source to verify that this is the current version before use.

g. When an illustration contains embedded references (this practice is highly discouraged) to other illustrations or tables, the referenced table and illustration numbers shall not be changed. When an illustration or table, in the work package, is added or deleted prior to the referenced table or illustration the use of point illustration or table number is permitted and shall be in accordance with the LMI plan.

4.8.28 Use of color. Color may be used when it will enhance the understanding of the data. The use of some colors may not be appropriate for certain environmental conditions (refer to A.4.3.1).

5. DETAILED REQUIREMENTS.

5.1 Technical content preparation. Technical manual data developed in accordance with this standard shall be task oriented and fully consistent with the maintenance concepts derived from the baseline documents described below.

a. Logistic Management Information (LMI). The technical data and instructions developed by the requirements of Logistic Management Information and Department of Defense (DoD) Requirements for a Logistic Management Information (LMI), (including the maintenance allocation chart (MAC)) shall be used as the baseline to prepare TMs.

b. MAC. For equipment that does not have LMI data available, either a Preliminary Maintenance Allocation Chart (PMAC) or the MAC shall be used as the baseline to prepare TMs.

c. Additional source data. Available engineering drawings shall be used with the other required data. Sound engineering principles and techniques, available engineering analyses, service experience, performance data on the item and on similar items, and all other Reliability, Maintainability, Supportability (RMS) and Operational Availability (Ao) data available shall be used in the preparation of specific instructions.

5.2 Preparation of introductory matter and planning information for IETMs. Requirements for the preparation of introductory matter and planning information necessary to supplement the technical content chapters and associated work packages in Appendix B through Appendix GI are provided in 5.2.1 through 5.2.2. Appendix A, IETM Functionality And Data Display Requirements And Content Selection Matrixes, provides detailed assembly and content requirements for all TMs covering operation, maintenance, and parts information, at all maintenance levels through depot.

5.2.1 Introductory matter **<framed.frnt>**. As applicable, the following introductory matter shall be prepared. Guidance for assembly of introductory matter frames is provided in MIL-HDBK-1222.

a. IETM installation data.

b. CD content frame.

c. (MC) Promulgation letter <**promulgation**>

d. Warning summary <**warnsum**>.

e. Revision summary frame **<revisionsummary>**.

f. Identification information **<frntcover>**.

g. Table of contents **<contents>**.

Source: https://assist.dla.mil -- Downloaded: 2016-12-05T17:12Z
Check the source to verify that this is the current version before use.

h. How To Use This IETM" information **<howtouse>**.

5.2.1.1 IETM installation data. Information on installing the CD-ROM on the computer and launching the IETM shall be prepared. The installation routine shall have an uninstall capability and shall determine if ample space is available for the install. Installation data shall include instructions for operating the IETM with and without web access. Installation routine shall check for previously installed versions of the IETM or display software. The information shall be printed and shall be part of the packaging of the CD-ROM. The following types of install/capabilities shall be available to the user.

a. The minimum installation, which is loading to the viewer only those files necessary to access the program and data on the CD. This requires that the programs for the IETMs be executable from the CD and be able to read the data from the CD. This is the preferred method.
b. Installation of the required files for the viewer to operate as a workstation on a LAN. In these cases, the program and data would be loaded to a server, and the PMA would access the program and data via a LAN. This type of install may be desirable in a flight line or motor pool environment.
c. Loading the executable program to the hard drive. This will require the data be accessed from the CD. This may be used when multiple CDs for a system use the same reader program and the program is loaded to the hard drive for faster operation.

5.2.1.2 CD content frame. When more than one IETM is resident on a CD, the first information that shall appear on the viewer is the CD content frame. This frame shall provide the IETM number and title of all technical manuals that are contained on the CD. A sample CD content frame is provided in MIL-HDBK-1222.

5.2.1.3 Promulgation letter (MC Only) **<promulgation>**. A promulgation letter provided by the acquiring activity shall be included.

5.2.1.4 Warning summary. When required, a warning summary shall be provided. The warning summary shall include first aid data, and explanations of all general safety warning icons <**safety**> and hazardous material icons <**haz-icons**> used in the manual. It shall also include descriptions <**warninfo**> and hazardous materials warnings <**hazard**> that have major impact throughout the IETM. Only warnings that meet this criteria shall be included. Warnings shown in the warning summary shall not be acknowledged. Refer to FIGURE 11 for an example of a warning summary As applicable, the warning summary shall consist of the following in the order specified below:

a. First aid data <**first-aid**>.
b. Warning icons <**safety**>.
c. Warning description <**warning**>.
d. Hazardous materials icons <**haz-icons**>.
e. Hazardous materials descriptions <**hazard**>.

5.2.1.4.1 First Aid **<first_aid>**. First aid data shall be included in warning summary. The first paragraph shall reference FM 4-25.11, First Aid. Any additional first aid data not described in FM 4-25.11 shall be described in this section.

Source: https://assist.dla.mil -- Downloaded: 2016-12-05T17:12Z
Check the source to verify that this is the current version before use.

5.2.1.5 Revision summary frame **<revisionsummary>**. When a revision to an IETM is issued, a revision summary frame shall be displayed containing a list of work packages by title that have been revised. For each work package listed, a brief description of the major changes shall be provided. The revised work packages listed on the revision summary frame shall be linked to the work package containing the revised information. The revision summary shall also indicate those work packages that have been superseded. If the work package supersedes a work package in the same manual other than itself, the supersedure notice shall be as folllows: "This work package supersedes work package titled (*insert title and hyperlink*), dated (*insert date*)." If the superseded work package is contained in another manual, the notice shall contain the publication number. If the superseded work package is classified, the supersession information shall be as follows: "This work package supersedes work package titled (*insert title and hyperlink*), dated (*insert date*), which should be destroyed in accordance with applicable security regulations. Examples of revision summary frames are provided in MIL-HDBK-1222. For revisions that are prepared to support maintenance transformation, the following statement shall be included on the revision summary frame: "This revision implements Army Maintenance Transformation and changes the Maintenance Allocation Chart (MAC) to support Field and Sustainment Maintenance."

5.2.1.6 Identification information **<frntcover>**. Identification information shall be prepared for each IETM and DMWR/NMWR. Identification information shall include National Stock Number (NSN) and End Item Code (EIC) for equipment publications. However, NSN and EIC are not required for other publications such as general equipment and software manuals. The following data shall be included. Additional detailed requirements for the content information are described in 5.2.1.6.1 through 5.2.1.6.15 (refer to FIGURE 12, FIGURE 13, FIGURE 14, and FIGURE 15).

a. Security classification (when required).
b. TM number single service <**tmno**> or joint service **<tminfono>**.
c. National Overhaul Standards Statement (TM/NMWR/DMWR with NMP Overhaul Standards only).
d. TM title **<prtitle>**.
e. National stock number (NSN) **<nsn>** for item(s) covered (when required).
f. End Item Code (EIC) **<eic>**, as specified in the Army Master Data File (AMDF) (when required).
g. Subtitle (when required) **<stitle>**.
h. Weapon system name (when required) <**weapon-system**>.
i. Equipment illustration (when required) **<graphic>**.
j. Reporting errors and recommending improvements <**reporting**>
k. Availability statement **<avail> (DMWR/NMWR only)**.
l. Supersedure notice (for revisions only) **<super>**.
m. Disclosure notice (when specified) **<disclos>**.
n. Distribution statement **<dist>**.
o. Export control notice warning (when specified) **<export>**.
p. Destruction notice (when specified) **<destr>**.

Source: https://assist.dla.mil -- Downloaded: 2016-12-05T17:12Z
Check the source to verify that this is the current version before use.

q. General purpose notices (when required) <**general_purpose_notice**>.

r. Service nomenclature **<servnomen>**.

s. TM Publication date <**date**>.

t. User feedback link (refer to A.5.2.3.5.1).

5.2.1.6.1 TM number **<tmno>**. IETMs shall be numbered the same as page-based TMs in accordance with DA PAM 25-40. Publication medium shall never be IETM, ETM, or EM. The TM number shall not include words such as Apache or HEMMIT. IETMs shall be numbered with &P (e.g. 14&P) for manuals containing parts information.

5.2.1.6.2 TM number for joint service IETMs **<tminfono>**. If the IETM is jointly used, each Service's number shall be included and only the proponent activity's IETM number shall be placed on each frame of the TM. The numbers shall be prefixed with the word Air Force, Army, Marine Corps, or Navy (NAVSEA or NAVAIR), as applicable. The acquiring activity's (proponent activity's) name **<servbranch>** and manual number **<tmno>** shall be placed first. The IETM number(s) for the other Services shall be in alphabetical sequence following the acquiring activity's name and manual number. For example,

"ARMY	TM 11-1510-204-34
AIR FORCE	TO 21M-LGM30G-12
MARINE CORPS	TM 12345A-15/1
NAVY (NAVAIR)	AI-F18AA-WRM-070
NAVY (NAVSEA)	SE211-FA-MMA-010/SPS-10A"

5.2.1.6.3 National Overhaul Standards statement (TM/NMWR/DMWR with NMP Overhaul Standards Only). The following shall be added to the title of NMWRs/DMWRs which document national overhaul standards for the National Maintenance Program: "Containing National Overhaul standards for". See FIGURE 13, FIGURE 14, and FIGURE 15 for examples.

5.2.1.6.4 Weapon system name **<weapon-system>**. When required the name of the weapon system to which this publication applies shall be included.

5.2.1.6.5 Reporting errors and recommending improvements statement **<reporting>**. A reporting errors and recommending improvements statement shall be included. The mailing address, e-mail address, and fax number of the responsible proponent shall be inserted in the statement. Additional information may be added as required by the acquiring activity (e.g., how to submit an electronic 2028).

a. Unclassified IETM. Except for classified IETMs, the following statement shall be included.

(1) Army Only TM. The following statements shall be included:

"**REPORTING ERRORS AND RECOMMENDING IMPROVEMENTS**

You can help improve this IETM. If you find any mistakes or if you know of a way to improve the procedures, please let us know. If your IETM supports online forms, fill in the electronic publication change request and when connected to the internet, transmit the form. If your IETM does not support online forms, obtain a copy of a DA Form 2028, Recommended Changes to Publications and Blank Forms. Your IETM may include a partially completed DA 2028. Print out the form and complete filling in the pertinent information. For IETMs without a printable DA Form 2028, blank forms should be available through your publications system. Complete the DA Form 2028 and

Source: https://assist.dla.mil -- Downloaded: 2016-12-05T17:12Z
Check the source to verify that this is the current version before use.

mail it directly to: (*Insert name and address of proponent*). If you are unable to obtain a DA Form 2028, you may provide the recommendations by letter to the above address. You may also send in your recommended changes via electronic mail or by fax. Our fax number is (*insert DSN and commercial number of proponent)*. Our e-mail address is (insert address of proponent). A reply will be furnished to you."

(2) Marine Only TM. The following statements shall be included:

"**REPORTING ERRORS AND RECOMMENDING IMPROVEMENTS**

You can help improve this IETM. If you find any mistakes or if you know of a way to improve the procedures, please let us know. If your IETM supports online forms, fill in the electronic publication change request and when connected to the internet, transmit the form. If your IETM does not support online forms, obtain a copy of a NAVMC Form 10772, Recommended Changes to Publications and Blank Forms. Your IETM may include a partially completed NAVMC Form 10772. Print out the form and complete filling in the pertinent information. For IETMs without a printable NAVMC Form 10772, blank forms should be available through your publications system. Complete the NAVMC Form 10772 and mail it directly to: (*Insert name and address of proponent*). If you are unable to obtain a NAVMC Form 10772, you may provide the recommendations by letter to the above address. You may also send in your recommended changes via electronic mail or by fax. Our fax number is (*insert DSN and commercial number of proponent)*. Our e-mail address is (insert address of proponent). A reply will be furnished to you."

(3) Multi-Service TM. The following statements shall be included only for multi-service technical publication and use only applicable services (e.g., if the Navy does not use the publication, do not include a statement for that Service):

"**REPORTING ERRORS AND RECOMMENDING IMPROVEMENTS**

You can help improve this IETM. If you find any mistakes or if you know of a way to improve the procedures, please let us know. Service, should be submitted as follows:

(a) (A) Army - If your IETM supports online forms, fill in the electronic publication change request and when connected to the internet, transmit the form. If your IETM does not support online forms, obtain a copy of a DA Form 2028, Recommended Changes to Publications and Blank Forms. Your IETM may include a partially completed DA 2028. Print out the form and complete filling in the pertinent information. For IETMs without a printable DA Form 2028, blank forms should be available through your publications system. Complete the DA Form 2028 and mail it directly to: (*Insert name and address of proponent*). If you are unable to obtain a DA Form 2028, you may provide the recommendations by letter to the above address.

Source: https://assist.dla.mil -- Downloaded: 2016-12-05T17:12Z
Check the source to verify that this is the current version before use.

(b) (MC) Marine Corps - If your IETM supports online forms, fill in the electronic publication change request and when connected to the internet, transmit the form. If your IETM does not support online forms, obtain a copy of a NAVMC Form 10772, Recommended Changes to Publications and Blank Forms. Your IETM may include a partially completed NAVMC Form 10772. Print out the form and complete filling in the pertinent information. For IETMs without a printable NAVMC Form 10772, blank forms should be available through your publications system. Complete the NAVMC Form 10772 and mail it directly to: (Insert name and address of proponent). If you are unable to obtain a NAVMC Form 10772, you may provide the recommendations by letter to the above address.

(c) (N) Navy - If your IETM supports online forms, fill in the electronic publication change request and when connected to the internet, transmit the form. If your IETM does not support online forms, you may provide the recommendations by letter to the above address.

(d) (F) Air Force - If your IETM supports online forms, fill in the electronic publication change request and when connected to the internet, transmit the form. If your IETM does not support online forms, obtain a copy of an AFTO Form 22, Technical Order Publications Improvement Report. Your IETM may include a partially completed AFTO Form 22. Print out the form and complete filling in the pertinent information. For IETMs without a printable AFTO Form 22, blank forms should be available through your publications system. Complete the AFTO Form 22 and mail it directly to: (Insert name and address of proponent). If you are unable to obtain a AFTO Form 22, you may provide the recommendations by letter to the above address.

You may also send in your recommended changes via electronic mail or by fax. Our fax number is (*insert DSN and commercial number of proponent)*. Our e-mail address is (insert address of proponent). A reply will be furnished to you."

b. Classified IETMs. Classified IETMs use the same wording as unclassified IETMs, except that the statement “When dealing with classified information, make sure that your correspondence is properly marked and is handled in accordance with current security regulations." shall be included in the beginning of the reporting errors and recommending improvements statement as follows:

"**REPORTING ERRORS AND RECOMMENDING IMPROVEMENTS**

You can help improve this IETM. If you find any mistakes or if you know of a way to improve the procedures, please let us know. When dealing with classified information, make sure that your correspondence is properly marked and is handled in accordance with current security regulations…"

5.2.1.6.6 Availability statement **(DMWR/NMWR only) <avail>**. For DMWRs/NMWRs only, the following availability statement shall be included:

"This publication is not available through the St. Louis Media Distribution Division. This publication is available through (*insert the name and address of the proponent activity*)."

Source: https://assist.dla.mil -- Downloaded: 2016-12-05T17:12Z
Check the source to verify that this is the current version before use.

5.2.1.6.7 Supersedure notice for revisions only <**super**>. When an IETM is updated, a supersedure notice shall be included and an asterisk (*) shall prefix the supersedure notice and the TM number.

5.2.1.6.8 Disclosure notice <**disclos**>. Unless specified otherwise by the acquiring activity, the following disclosure notice shall be included on all classified and unclassified TMs, except those with distribution statement A:

"**WARNING**

This information is furnished upon the condition that it will not be released without the specific authority of the Department of the Army of the United States, that it will be used for military purposes only, that individual or corporate rights originating in the information, whether patented or not, will be respected, that the recipient will report promptly to the Department of the Army, any known or suspected compromise, and that the information will be provided substantially the same degree of security afforded it by the Department of Defense of the United States. Also, regardless of any other markings on the document, it will not be downgraded or declassified without written approval of the originating United States agency."

5.2.1.6.9 Distribution statement <**dist**>. All IETMs shall have a distribution statement for each manual or revision. The appropriate distribution statement shall be provided by the acquiring activity as selected from DOD 5230.24.

5.2.1.6.10 Export control notice warning <**export**>. For those pubs with export controlled data, the following export control notice contained in DOD Directive 5230.24 shall be included:

"**WARNING -** This document contains technical data whose export is restricted by the Arms Export Control Act (Title 22, U.S.C., Sec 2751, et. seq.) or the Export Administration Act of 1979, as amended, Title 50A, U.S.C., App. Violations of these export laws are subject to severe criminal penalties. Disseminate in accordance with provisions of DoD Directive 5230.25."

5.2.1.6.11 Destruction notice <**destr**>. All IETMs marked with distribution statements "B", "C", "D", "E", "F", or "X" shall be marked with the destruction notice provided by the acquiring activity from DoD 5230.24.

5.2.1.6.12 General purpose notice <**general_purpose_notice**>. When specified by the acquiring activity, additional notice(s) may be included that are not addressed by the notices in 5.2.1.6.7 through 5.2.1.6.11. The notice shall have a title followed by the notice text.

5.2.1.6.13 Service nomenclature <**servnomen**>. All TMs shall include the service or acquiring activity's nomenclature

5.2.1.6.14 TM Publication date <**date**>. The TM publication date shall be the estimated authentication/issue date of the publication as assigned by the proponent. If the publication is produced in more than one media, the date must be the same on both media. The day, month, and year shall be given in that sequence (for example, 10 JULY 1988).

5.2.1.6.15 For Army communications security (COMSEC) manuals use. Unless otherwise specified by the acquiring activity, unclassified IETMs shall contain the notice FOR OFFICIAL USE ONLY. The notice shall be displayed in accordance with Appendix A. Classified COMSEC IETMs shall be appropriately marked at the level of classification.

Source: https://assist.dla.mil -- Downloaded: 2016-12-05T17:12Z
Check the source to verify that this is the current version before use.

5.2.1.7 Table of contents **<contents>**. A table of contents shall be prepared in accordance with A.4.2.4 and A.5.2.3.7.5. A sample table of contents is provided in MIL-HDBK-1222.

5.2.1.8 "How To Use This IETM" information **<howtouse>**.

a. Information to familiarize the user with special or unusual features of the IETM shall be prepared. Coverage shall lead the user through the IETM and explain important features of the organization and content. For example, the format is explained; operating, troubleshooting, Preventive Maintenance Checks and Services (PMCS) are explained; and repair, maintenance instructions, and other pertinent information are explained.

b. Any peculiarities in the basic structure of the IETM shall be described. "How To Use This IETM" information shall not repeat instructions given within the work packages.

c. For all IETMs (excluding operators) the "How To Use This IETM" information shall include an explanation on how and where parts information is available in the work packages and how the parts information is accessed.

d. For troubleshooting, an explanation on how troubleshooting data is presented in the IETM shall be included. If applicable, an explanation on how failure symptom indexes and malfunction codes correspond to maintenance operational checks and troubleshooting procedures for individual systems and components.

e. An explanation on how to identify hotspots and how they are used and activated.

f. If a double king sized paged-based paper TM containing the supporting schematic and wiring diagrams has been authorized and developed, a reference to this TM by TM number shall be provided.

g. When a standard form (i.e., DA 2408-13, DA 2404, etc.) must be used in the process of performing a task, instructions shall be provided on how these forms are accessed, used, and filled out.

h. Provide an explanation on how to fill out a DA Form 2028 and emphasize that reference shall be made to a work package by the exact title that is provided in the table of contents.

i. An explanation and use of all icons and buttons.

j. A link may be made to an IETM tutorial (when required) to explain use of the IETM.

5.2.1.8.1 International standardization agreements. When specified by the acquiring activity, the “How To Use This Manual” information shall contain the following.

“NOTE

Certain provisions of this IETM (identify by work package, paragraph, or similar manner, if appropriate) are the subject of international standardization agreement (insert the ABCA or ASCC standard number; the NATO, STANAG, NETR, or NEPR number; or appropriate documentary reference). When revision or cancellation of this IETM is proposed which will modify the international agreement concerned, the technical manual management activity will take appropriate action through international standardization channels, including departmental standardization offices, to change the agreement or make other appropriate accommodations.”

Source: https://assist.dla.mil -- Downloaded: 2016-12-05T17:12Z
Check the source to verify that this is the current version before use.

5.2.2 Rear matter.

5.2.2.1 Reporting errors and recommending improvements DA Form 2028 **<da2028>**. A blank DA Form 2028, or an electronic equivalent, should be provided in the IETM so the users can notify the proponent if any mistakes are found or any recommended improvements can be made to the IETM. Guidelines shall be included for completing the form. When this form or an electronic equivalent of this form is not provided on the IETM, the paper form shall be used.

5.2.2.2 Blank forms. Unless otherwise specified, inclusion of blank forms shall be in accordance with AR 25-30.

5.2.2.3 Glossary and index. IETMs shall not contain a glossary or index. Terms shall be defined in the general information work package (see Appendix B).

5.2.2.4 Metric conversion table. IETMs shall not contain a metric conversion table. IETMs shall use free metric conversion software for metric conversion.

6. NOTES.

(This section contains information of a general or explanatory nature that may be helpful, but is not mandatory.)

6.1 Intended use. MIL-STD-40051-1 prescribes requirements applicable to various types of IETMs, and the revisions for these manuals.

6.2 Acquisition requirements . Acquisition document should cite the following:

a. Title, number, and date of this standard.
b. Title, number, and date of MIL-HDBK-1222.
c. Title, number, and date of MIL-STD-2361and MIL-HDBK-2361.
d. Filled out functionality selection matrix.
e. Filled out content selection matrix.

6.3 Tailoring guidance. The acquiring activity should tailor any required options offered herein in accordance with Appendix A, IETM Functionality And Data Display Requirements And Content Selection Matrixes.

6.4 Supersession Data. DELETED.

6.5 Subject term (key word) listing. The following terms are to be used to identify the MIL-STD-40051-1 document during retrieval searches,

a. Additional authorization list (AAL)
b. Basic issue items (BII)
c. Basis of issue (BOI)
d. Continuous Acquisition Life-cycle Support (CALS) raster
e. Computer graphics metafile (CGM)
f. Components of end item (COEI)
g. Depot maintenance work requirement (DMWR)
h. Expendable and durable items list
i. Extensible Markup Language (XML)

Source: https://assist.dla.mil -- Downloaded: 2016-12-05T17:12Z
Check the source to verify that this is the current version before use.

j. Illustrations
k. Initial Graphics Exchange Specification (IGES)
l. Introductory information
m. Maintenance allocation chart (MAC)
n. Maintenance instructions
o. National Maintenance Work Requirements (NMWR)
p. Operator instructions
q. Parts information.
r. Quality assurance (QA)
s. Security classification
t. Standard Generalized Markup Language (SGML)
u. Supporting information
v. Theory of operation
w. Troubleshooting procedures
x. Work package (WP)
y. Work package identification number

6.6 Change notations. The margins of this standard are marked with vertical lines to indicate modifications generated by this change. This was done as a convenience only and the Government assumes no liability whatsoever for any inaccuracies in these notations. Bidders and contractors are cautioned to evaluate the requirements of this document based on the entire content irrespective of the marginal notations.

Source: https://assist.dla.mil -- Downloaded: 2016-12-05T17:12Z
Check the source to verify that this is the current version before use.

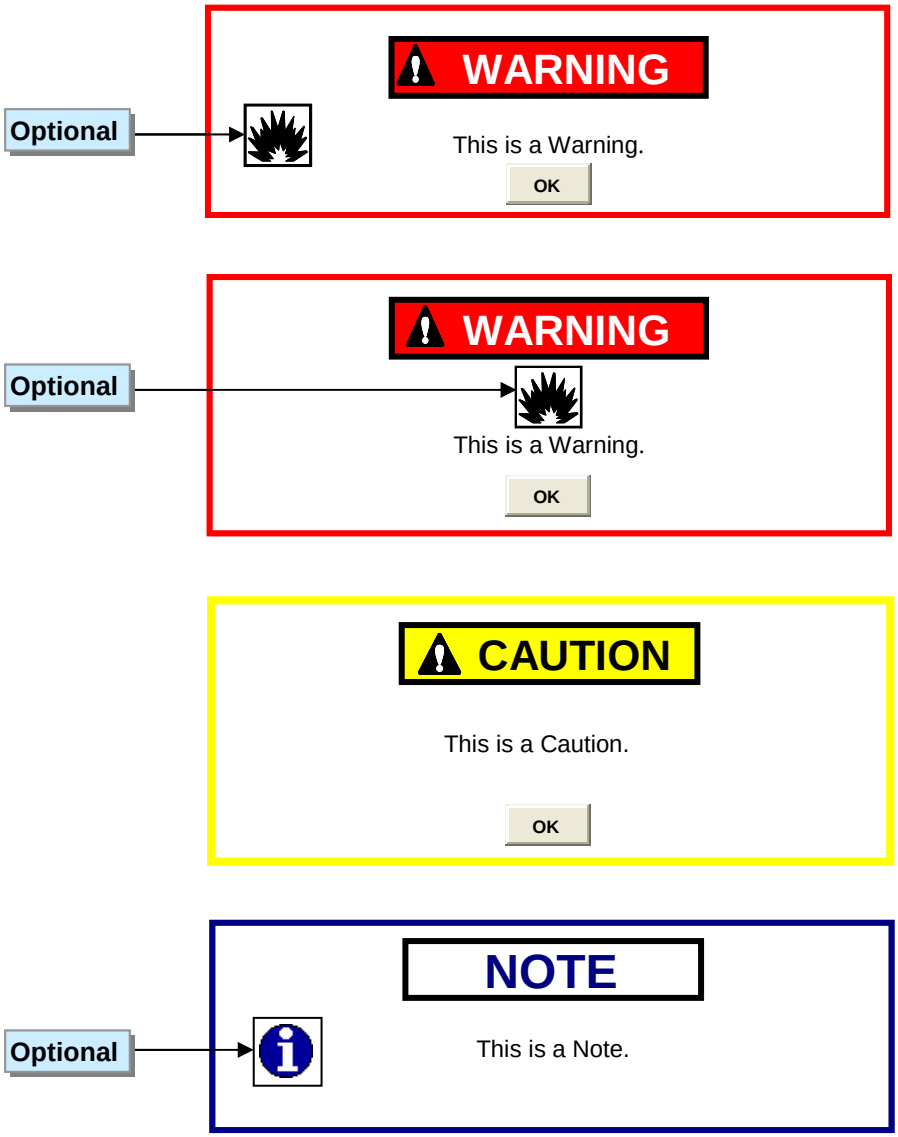

FIGURE 1. <u>Examples of warnings, cautions and notes.</u>

Source: https://assist.dla.mil -- Downloaded: 2016-12-05T17:12Z
Check the source to verify that this is the current version before use.

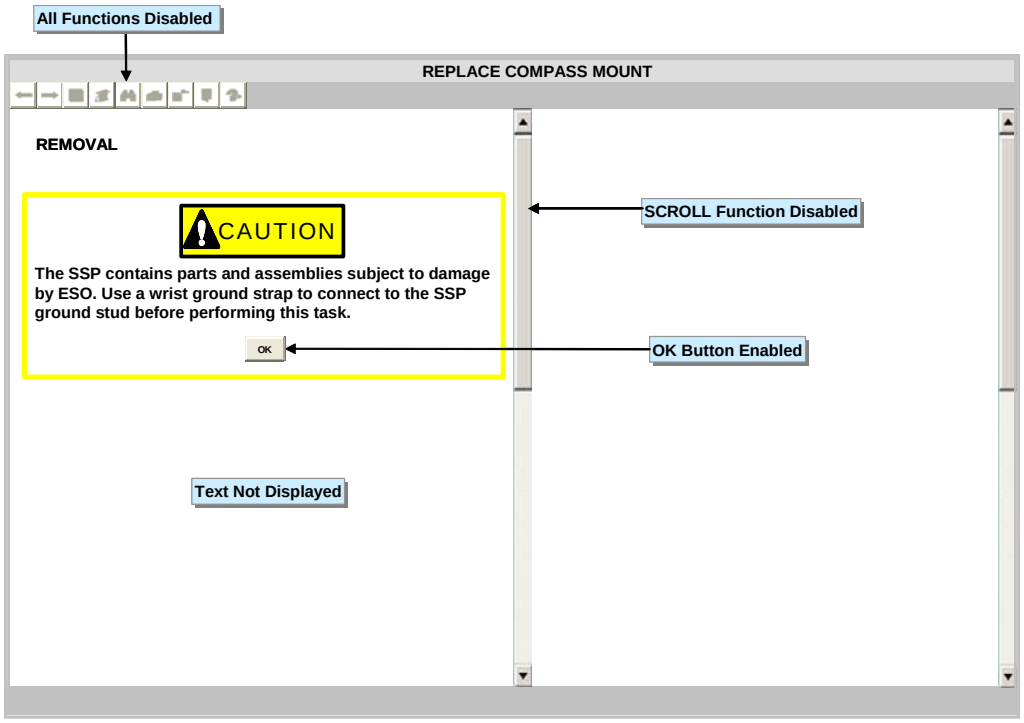

Pane Display Prior to Acknowledgment

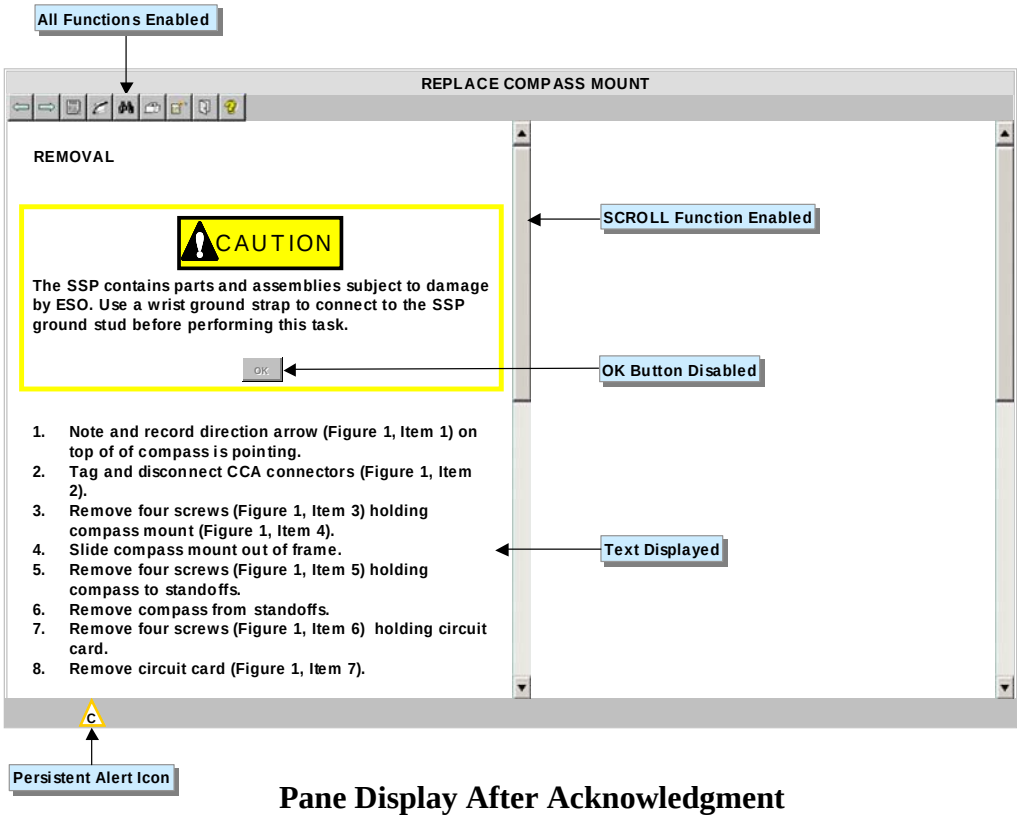

Pane Display After Acknowledgment

FIGURE 2. <u>Example of an in-line alert on a pane with scrolling.</u>

Source: https://assist.dla.mil -- Downloaded: 2016-12-05T17:12Z
Check the source to verify that this is the current version before use.

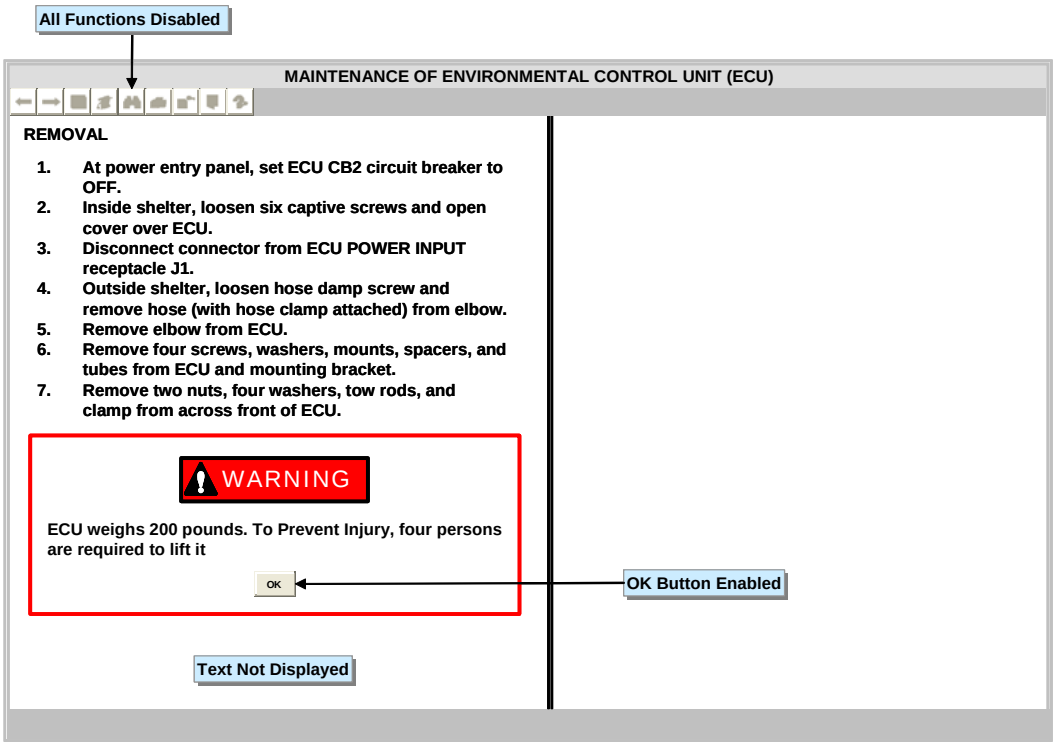

Pane Display Prior to Acknowledgment

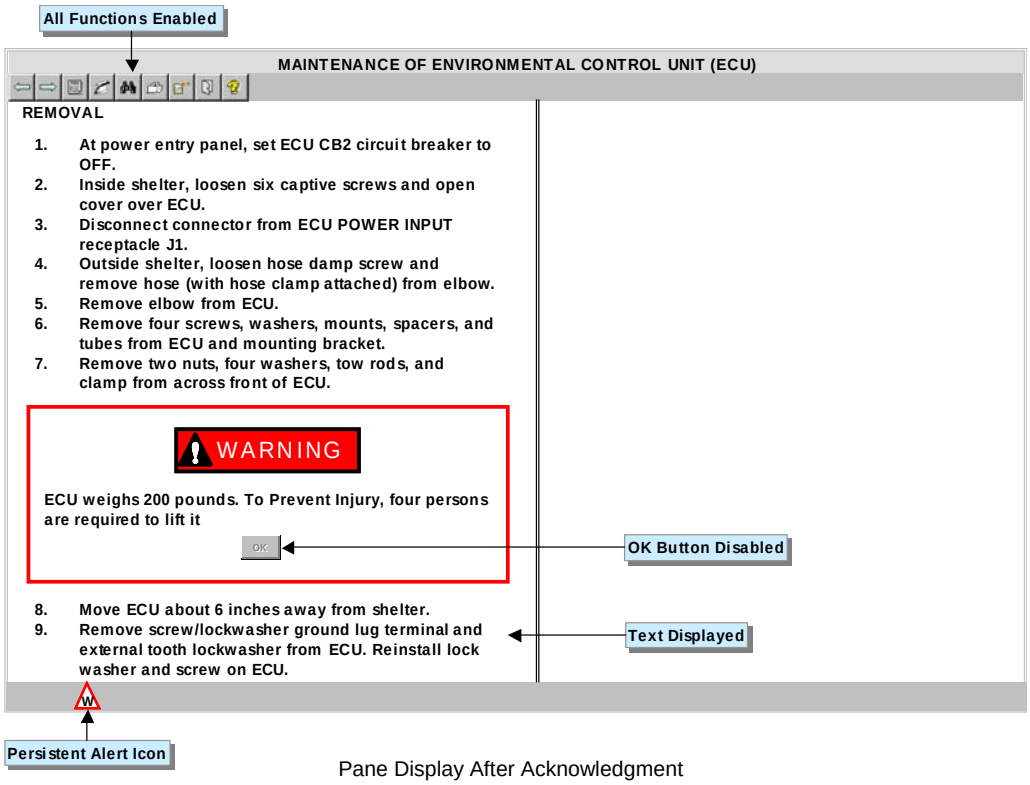

Pane Display After Acknowledgment

FIGURE 3. <u>Example of an in-line alert on a pane with no scrolling.</u>

Source: https://assist.dla.mil -- Downloaded: 2016-12-05T17:12Z
Check the source to verify that this is the current version before use.

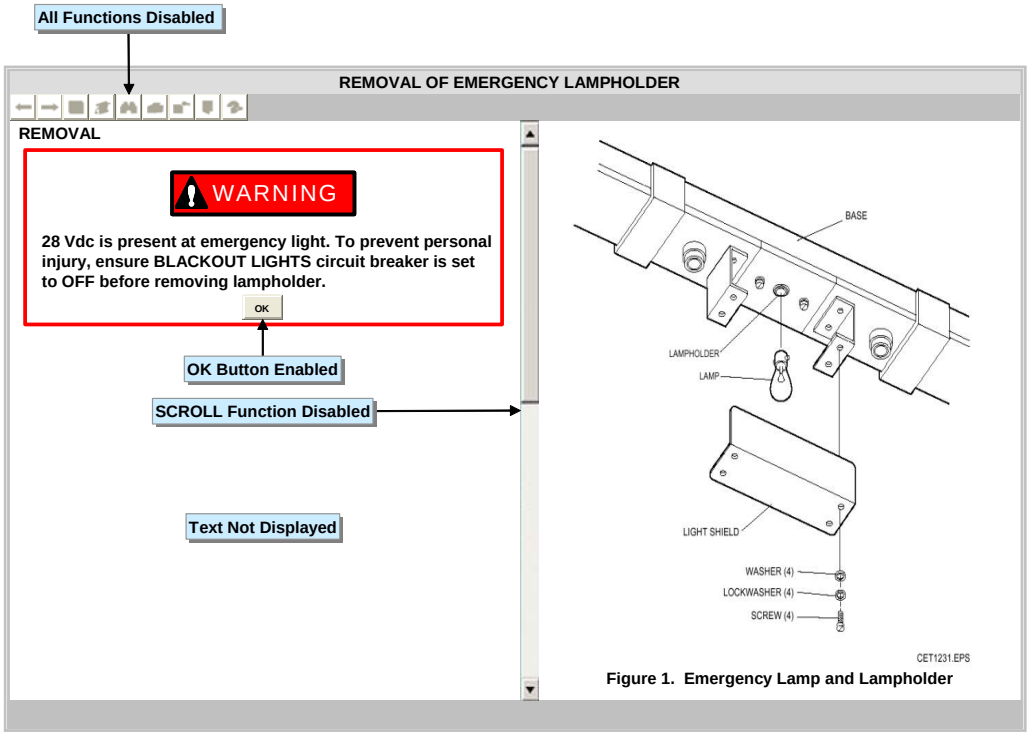

Pane Display Prior to Acknowledgment of First Alert

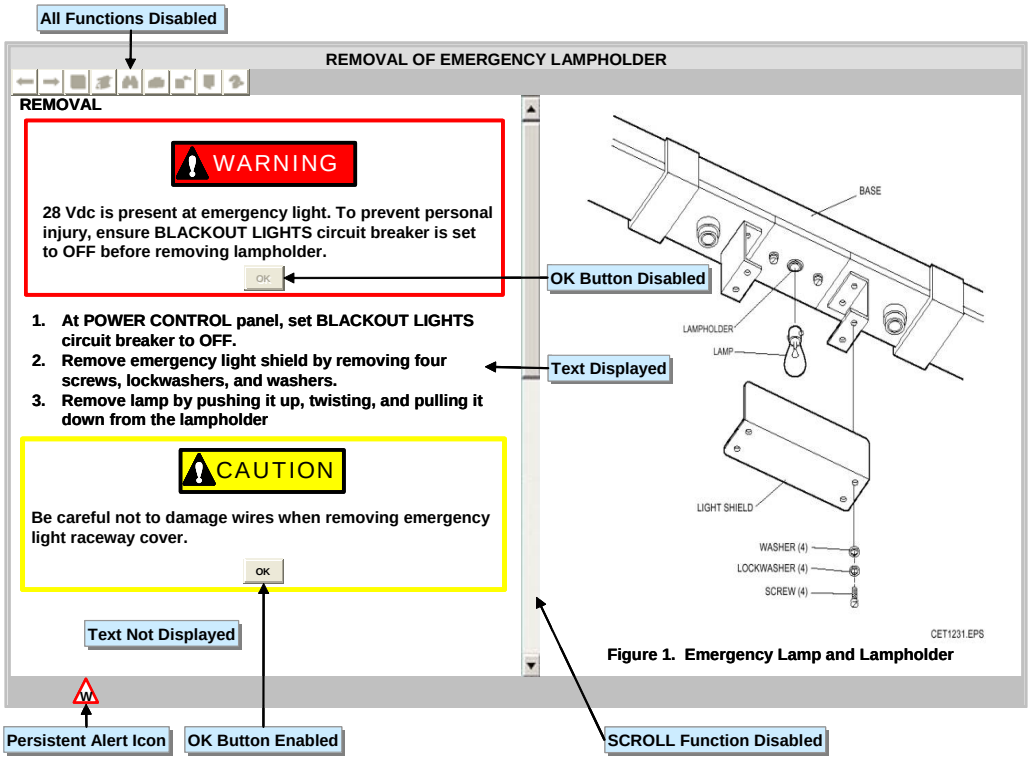

Pane Display Prior to Acknowledgment of Second Alert

FIGURE 4. <u>Example of multiple alerts acknowledgment using in-line alert.</u>

Source: https://assist.dla.mil -- Downloaded: 2016-12-05T17:12Z
Check the source to verify that this is the current version before use.

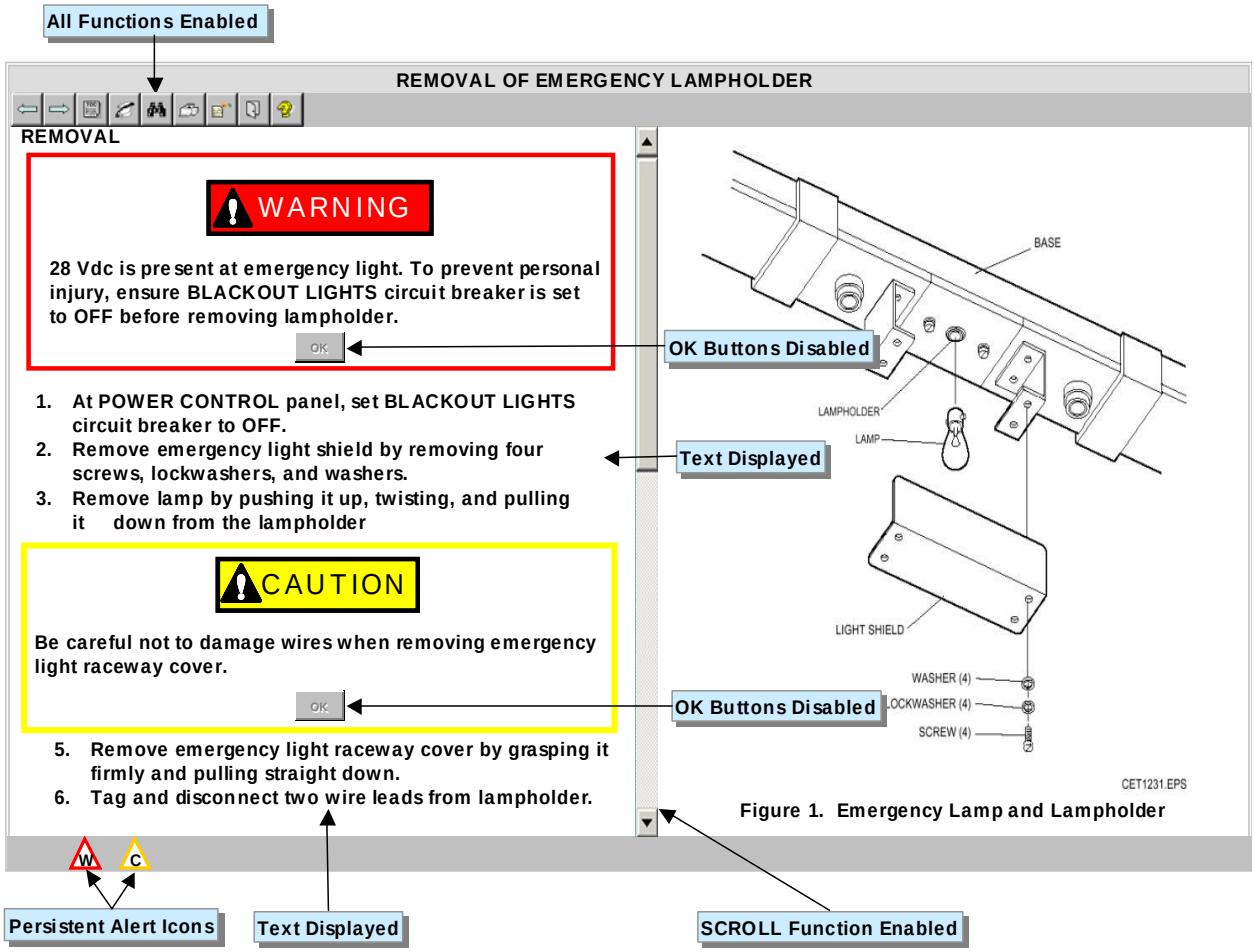

Pane Display After Acknowledgment of Both Alerts

FIGURE 4. <u>Example of multiple alerts acknowledgment using in-line alert.</u> - continued.

Source: https://assist.dla.mil -- Downloaded: 2016-12-05T17:12Z
Check the source to verify that this is the current version before use.

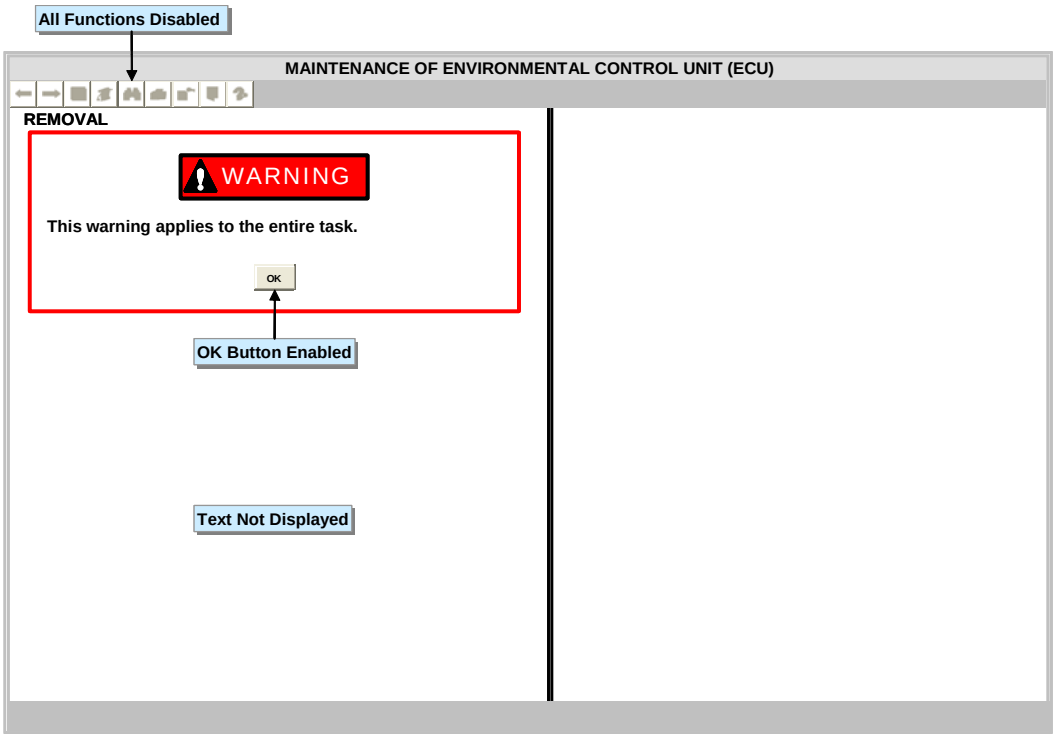

Pane Display Prior to Acknowledgment

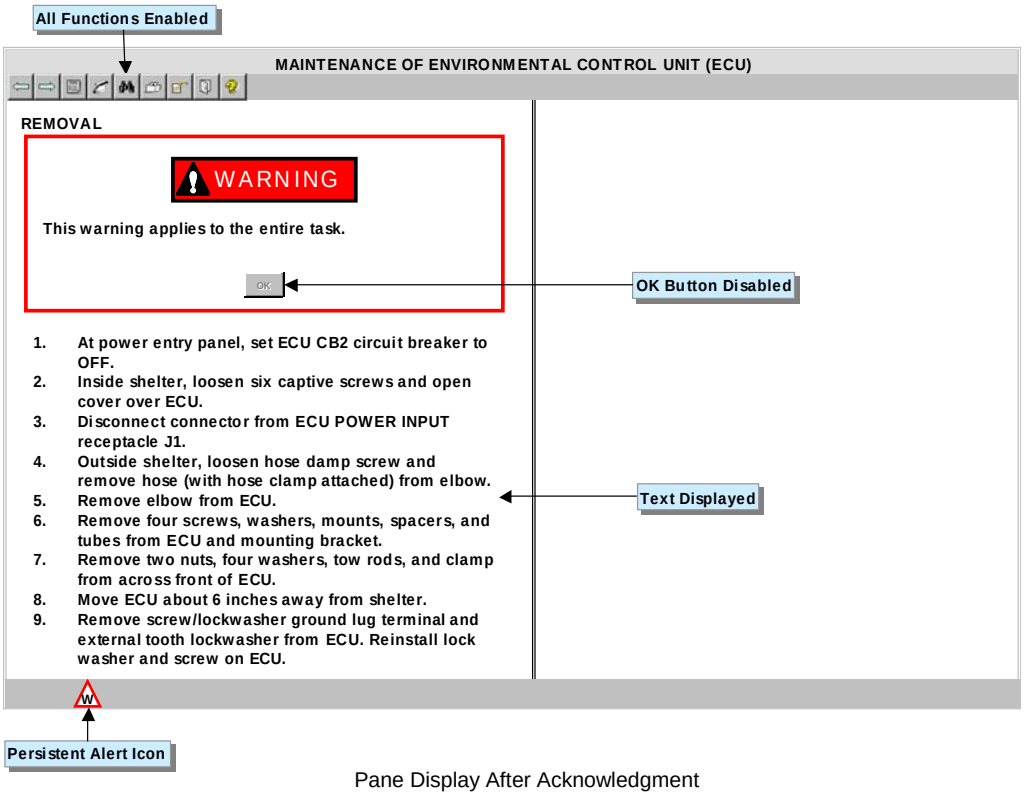

Pane Display After Acknowledgment

FIGURE 5. <u>Example of alert acknowledgment when alert applies to entire procedure or task.</u>

Source: https://assist.dla.mil -- Downloaded: 2016-12-05T17:12Z
Check the source to verify that this is the current version before use.

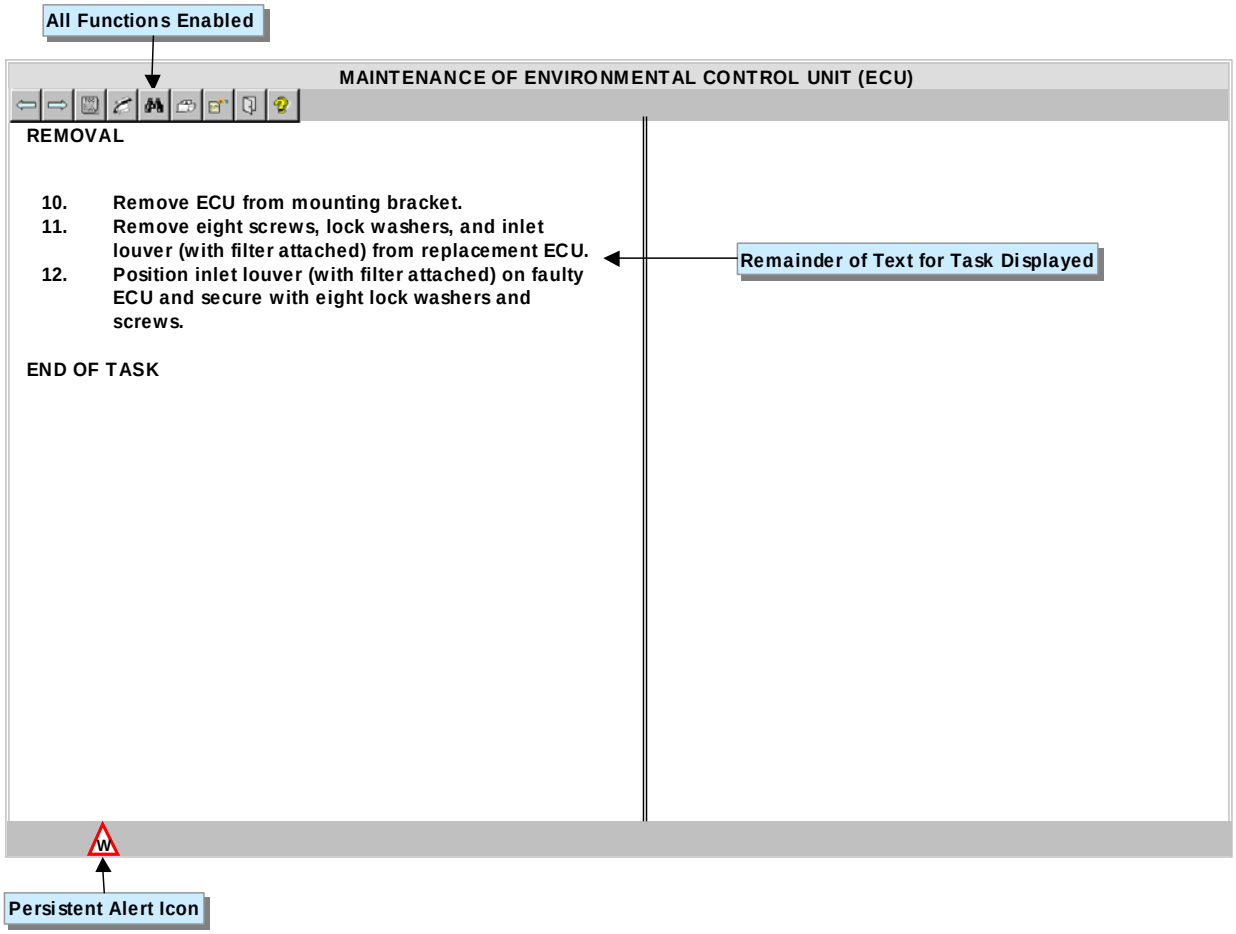

Pane Display After Next Function is Selected

FIGURE 5. <u>Example of alert acknowledgment when alert applies to entire procedure or task.</u> – continued.

Source: https://assist.dla.mil -- Downloaded: 2016-12-05T17:12Z
Check the source to verify that this is the current version before use.

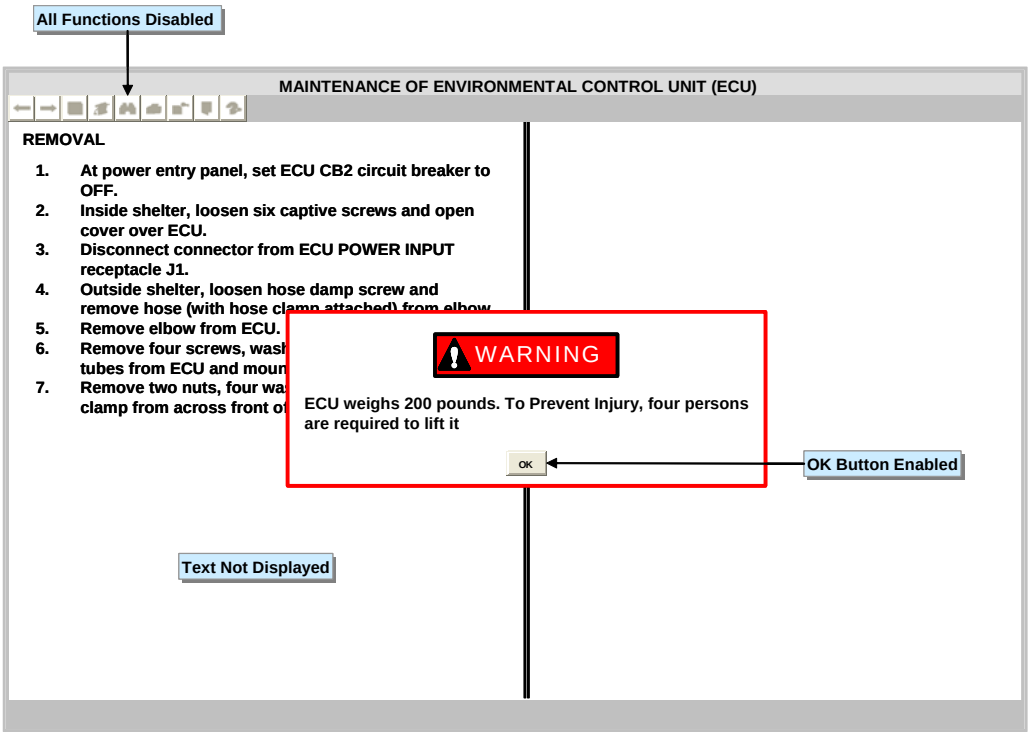

Pane Display Prior to Acknowledgment

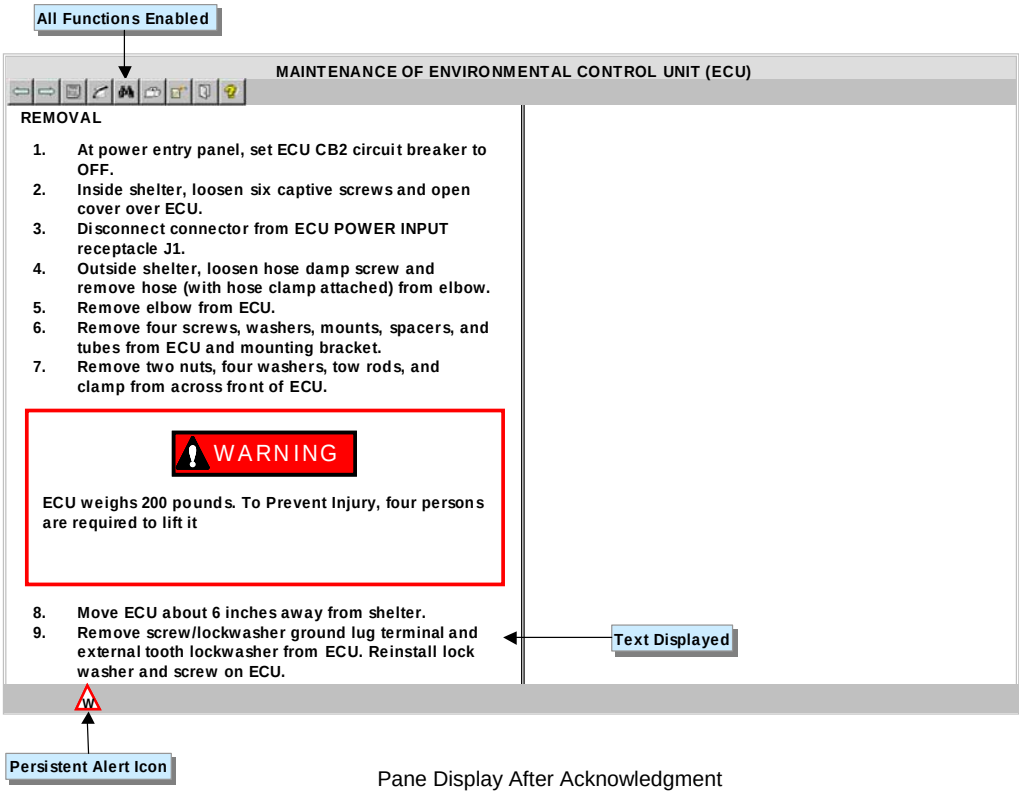

Pane Display After Acknowledgment

FIGURE 6. <u>Example of pop-up alert superimposed over applicable information.</u>

Source: https://assist.dla.mil -- Downloaded: 2016-12-05T17:12Z
Check the source to verify that this is the current version before use.

SAFETY WARNINGS ICONS

EAR PROTECTION - headphones over ears shows that noise level will harm ears.

ELECTRICAL - electrical wire to arm with electricity symbol running through human body shows that shock hazard is present.

ELECTRICAL - electrical wire to hand with electricity symbol running through hand shows that shock hazard is present.

FALLING PARTS - arrow bouncing off human shoulder and head shows that falling parts present a danger to life or limb.

FLYING PARTICLES - arrows bouncing off face shows that particles flying through the air will harm face.

FLYING PARTICLES - arrows bouncing off face with face shield shows that particles flying through the air will harm face.

HEAVY OBJECT - human figure stooping over heavy object shows physical injury potential from improper lifting technique.

FIGURE 7. <u>List of approved safety warning icons.</u>

Source: https://assist.dla.mil -- Downloaded: 2016-12-05T17:12Z
Check the source to verify that this is the current version before use.

SAFETY WARNINGS ICONS - Continued

HEAVY PARTS - hand with heavy object on top shows that heavy parts can crush and harm.

HEAVY PARTS - foot with heavy object on top shows that heavy parts can crush and harm

HEAVY PARTS - heavy object on human figure shows that heavy parts present a danger to life or limb

HEAVY PARTS - heavy object pinning human figure against wall shows that heavy, moving parts present a danger to life or limb

HELMET PROTECTION - arrow bouncing off head with helmet shows that falling parts present a danger

HOT AREA - hand over object radiating heat shows that part is hot and can burn

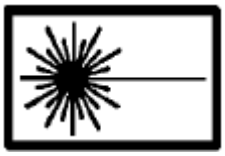

LASER LIGHT - laser light hazard symbol indicates extreme danger for eyes from laser beams and reflections.

FIGURE 7. <u>List of approved safety warning icons.</u> - Continued.

Source: https://assist.dla.mil -- Downloaded: 2016-12-05T17:12Z
Check the source to verify that this is the current version before use.

SAFETY WARNINGS ICONS – Continued

MOVING PARTS - human figure with an arm caught between gears shows that the moving parts of the equipment present a danger to life or limb.

MOVING PARTS - hand with fingers caught between gears shows that the moving parts of the equipment present a danger to life or limb.

MOVING PARTS - hand with fingers caught between rollers shows that the moving parts of the equipment present a danger to life or limb.

SHARP OBJECT - pointed object in hand shows that a sharp object presents a danger to limb.

SHARP OBJECT - pointed object in hand shows that a sharp object presents a danger to limb.

SHARP OBJECT - pointed object in foot shows that a sharp object presents a danger to

SLICK FLOOR - wavy line on floor with legs prone shows that slick floor presents a danger for falling.

FIGURE 7. <u>List of approved safety warning icons.</u> - Continued.

Source: https://assist.dla.mil -- Downloaded: 2016-12-05T17:12Z
Check the source to verify that this is the current version before use.

HAZARDOUS MATERIALS WARNINGS ICONS

BIOLOGICAL - abstract symbol bug shows that a material may contain bacteria or viruses that present a danger to life or health.

CHEMICAL - drops of liquid on hand shows that the material will cause burns or irritation to human skin or tissue.

CRYOGENIC - hand in block of ice shows that the material is extremely cold and can injure human skin or tissue.

EXPLOSION - rapidly expanding symbol shows that the material may explode if subjected to high temperatures, sources of ignition or high pressure.

EYE PROTECTION - person with goggles shows that the material will injure the eyes.

FIRE - flame shows that a material may ignite and cause burns.

FIGURE 8. <u>List of approved hazardous materials warning icons.</u>

Source: https://assist.dla.mil -- Downloaded: 2016-12-05T17:12Z
Check the source to verify that this is the current version before use.

HAZARDOUS MATERIALS WARNINGS ICONS - Continued

POISON - skull and crossbones shows that a material is poisonous or is a danger to life.

RADIATION - three circular wedges shows that the material emits radioactive energy and can injure human tissue.

VAPOR - human figure in a cloud shows that material vapors present a danger to life or health.

FIGURE 8. <u>List of approved hazardous materials warning icons.</u> – Continued.

Source: https://assist.dla.mil -- Downloaded: 2016-12-05T17:12Z
Check the source to verify that this is the current version before use.

MEDIA CONVERTER ASSEMBLY REMOVAL AND REPLACEMENT

REMOVAL

1. **On SHF radio (if in use), ensure that BATTERY switch is set to on.**

NOTE

Turning off the power converter also removes ac power from the router and SHF radio.

2. **On power converter, set POWER switch to OFF.**
3. **Disconnect cables from media converter.**
   W033-P2
   W034-P2
   W043-P2
   W044-P2
   W050-P2 (power cord)
4. **Remove two hex screws, lockwashers, and flat washers securing media converter mounting bracket to kneewall mounting rail nearest curbside wall**
5. **Remove media converter chassis from mounting bracket.**
6. **Loosen two captive screws on each moduae and remove them from media copnverter chassis for reinstallation into replacement chassis.**

END OF TASK

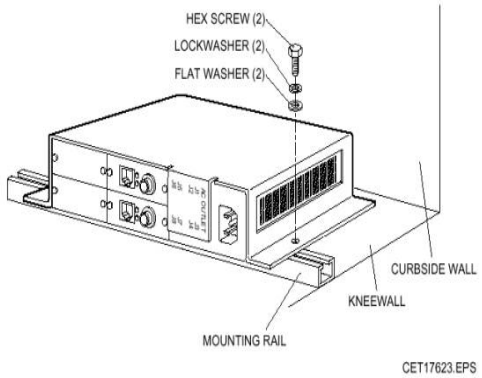

Figure 1. Media Converter Chassis Removal and Replacement

FIGURE 9. Example of an in-line note.

Source: https://assist.dla.mil -- Downloaded: 2016-12-05T17:12Z
Check the source to verify that this is the current version before use.

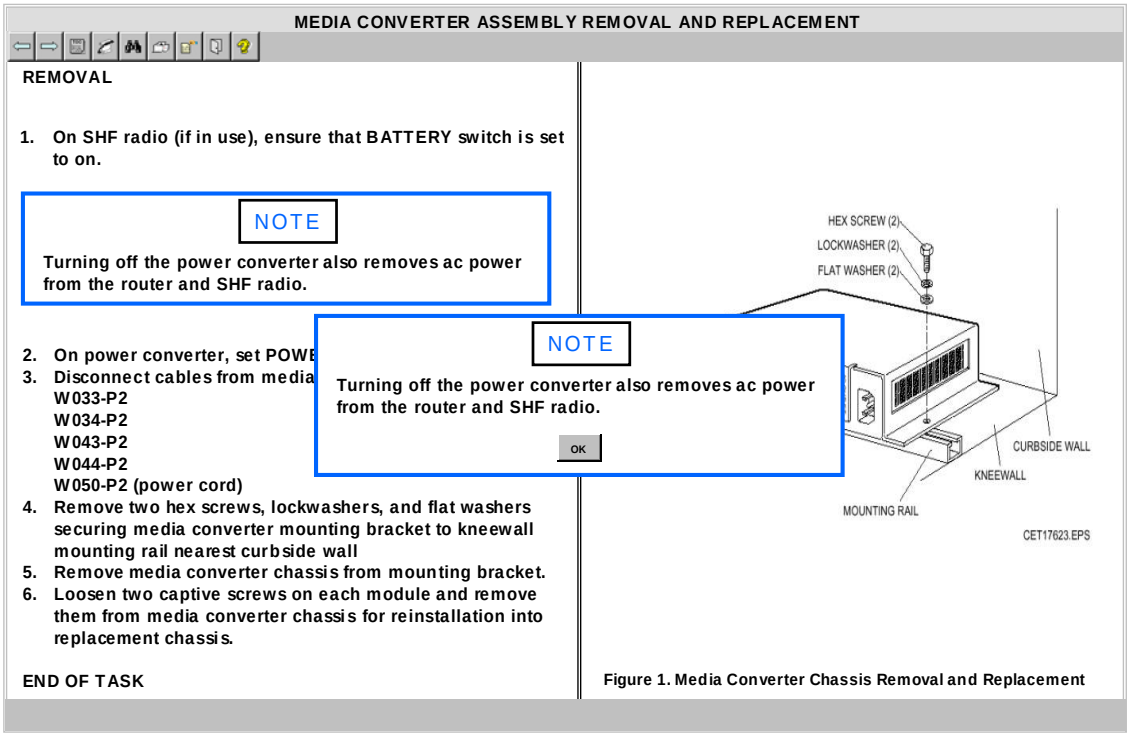

Pane Display Prior to Acknowledgment

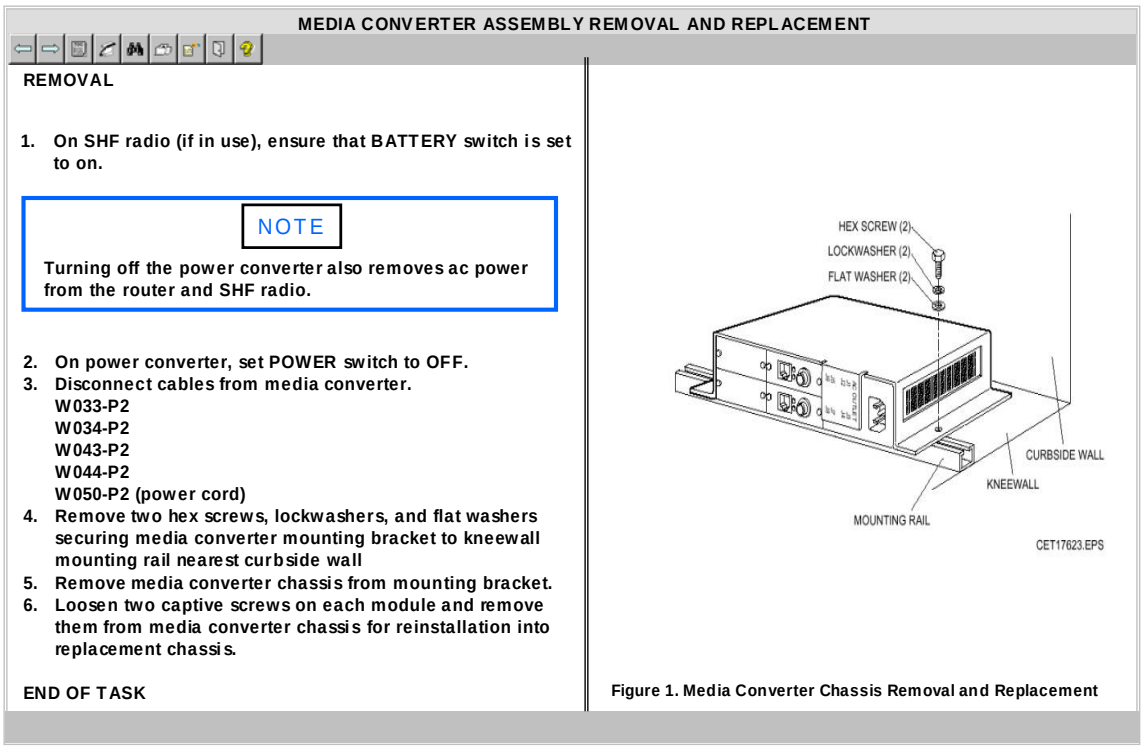

Pane Display After Acknowledgment

FIGURE 10. <u>Example of a note in a message dialog box.</u>

Source: https://assist.dla.mil -- Downloaded: 2016-12-05T17:12Z
Check the source to verify that this is the current version before use.

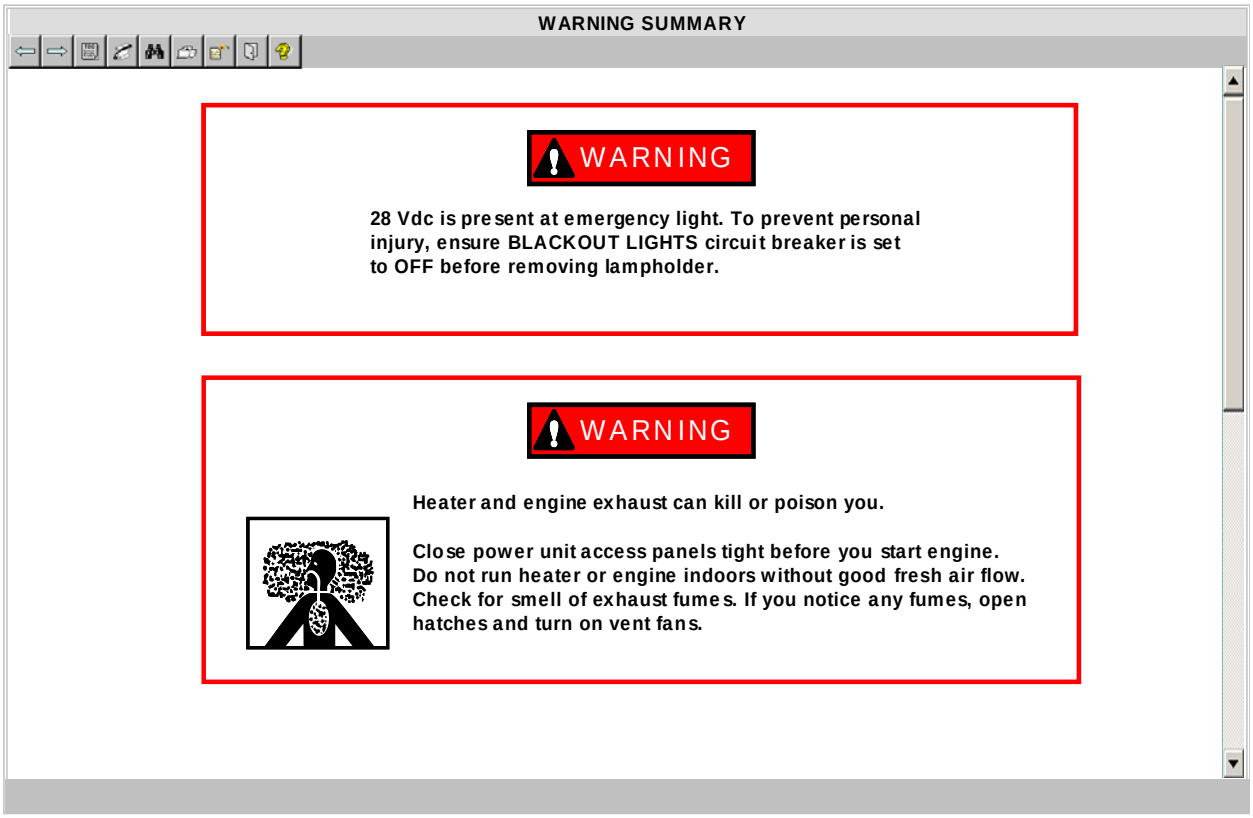

FIGURE 11. Example of a warning summary.

Source: https://assist.dla.mil -- Downloaded: 2016-12-05T17:12Z
Check the source to verify that this is the current version before use.

SECURITY CLASSIFICATION

TM NUMBER(S)

TYPE OF PUBLICATION
MAINTENANCE LEVELS
FOR

NOMENCLATURE OF EQUIPMENT
TYPE, MODEL, PART NUMBER
NATIONAL STOCK NUMBER (EIC)
OR
SUBJECT

SUBTITLE

WEAPON SYSTEM NAME

ILLUSTRATION

REPORTING ERRORS AND RECOMMENDING IMPROVEMENTS

AVAILABILITY STATEMENT
SUPERSEDURE NOTICE
DISCLOSURE NOTICE
DISTRIBUTION STATEMENT
WARNING
DESTRUCTION NOTICE
GENERAL NOTICE

SERVICE NOMENCLATURE
TM DATE

FIGURE 12. Example of an identification information frame.

Source: https://assist.dla.mil -- Downloaded: 2016-12-05T17:12Z
Check the source to verify that this is the current version before use.

TM 3-6665-339-10

TECHNICAL MANUAL
OPERATOR'S MANUAL
FOR
NUCLEAR-BIOLOGICAL-CHEMICAL
RECONNAISSANCE SYSTEM (NBCRS)
FOX M93A1
(NSN 6665-01-372-1303) (EIC Y60))

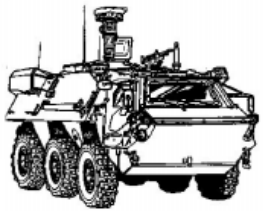

REPORTING ERRORS AND RECOMMENDING IMPROVEMENTS

DISTRIBUTION STATEMENT C
WARNING
DESTRUCTION NOTICE

HEADQUARTERS, DEPARTMENT OF THE ARMY
1 JUNE 1996

FIGURE 12. Example of an identification information frame. - Continued.

Source: https://assist.dla.mil -- Downloaded: 2016-12-05T17:12Z
Check the source to verify that this is the current version before use.

DMWR X-XXXX-XXX

DEPOT MAINTENANCE WORK REQUIREMENT
CONTAINING
NATIONAL MAINTENANCE REPAIR STANDARDS
FOR

INTERROGATOR SETS
AN/TPX-46(V)1 (NSN 589500-423-1693) (EIC IZA)
AN/TPX-46(V)2 (NSN 589500-423-1694) (EIC IZB)

REPORTING ERRORS AND RECOMMENDING IMPROVEMENTS

AVAILABILITY STATEMENT
DISCLOSURE NOTICE
DISTRIBUTION STATEMENT D
DESTRUCTION NOTICE

US ARMY COMMUNICATIONS-ELECTRONICS LIFE CYCLE MANAGEMENT COMMAND, FORT MONMOUTH, NJ

1 JUNE 1999

FIGURE 13. Example of Identification information for DMWR with National Overhaul Standards.

Source: https://assist.dla.mil -- Downloaded: 2016-12-05T17:12Z
Check the source to verify that this is the current version before use.

NMWR X-XXXX-XXX

NATIONAL MAINTENANCE WORK REQUIREMENT
CONTAINING
NATIONAL MAINTENANCE REPAIR STANDARDS
FOR

INTERROGATOR SETS
AN/TPX-46(V)1 (NSN 589500-423-1693) (EIC IZA)
AN/TPX-46(V)2 (NSN 589500-423-1694) (EIC IZB)

REPORTING ERRORS AND RECOMMENDING IMPROVEMENTS

AVAILABILITY STATEMENT
DISCLOSURE NOTICE
DISTRIBUTION STATEMENT D
DESTRUCTION NOTICE

US ARMY COMMUNICATIONS-ELECTRONICS LIFE CYCLE MANAGEMENT COMMAND, FORT MONMOUTH, NJ
1 JUNE 1999

FIGURE 14. Example of Identification information for NMWR.

Source: https://assist.dla.mil -- Downloaded: 2016-12-05T17:12Z
Check the source to verify that this is the current version before use.

TM X-XXXX-XXX-14&P

TECHNICAL MANUAL
OPERATOR, FIELD, AND SUSTAINMENT MAINTENANCE MANUAL
CONTAINING
NATIONAL MAINTENANCE REPAIR STANDARDS
AND PARTS INFORMATION
FOR

INTERROGATOR SETS
AN/TPX-46(V)1 (NSN 5895-00-423-1693) (EIC IZA)
AN/TPX-46(V)2 (NSN 5895-00-423-1694) (EIC IZB)

REPORTING ERRORS AND RECOMMENDING

DISCLOSURE NOTICE
DISTRIBUTION STATEMENT D
DESTRUCTION NOTICE

HEADQUARTERS, DEPARTMENT OF THE ARMY
1 JUNE 1999

FIGURE 15. Example of Identification information for TM with National Overhaul Standards.

Source: https://assist.dla.mil -- Downloaded: 2016-12-05T17:12Z
Check the source to verify that this is the current version before use.

This page intentionally left blank.

Source: https://assist.dla.mil -- Downloaded: 2016-12-05T17:12Z
Check the source to verify that this is the current version before use.

APPENDIX A

IETM FUNCTIONALITY AND DATA DISPLAY REQUIREMENTS AND CONTENT SELECTION MATRIXES

A.1 SCOPE.

A.1.1 Scope. This appendix includes the requirements for IETM functionality and data display (look and feel) and provides the IETM technical content selection for all major weapon systems and all types of equipment, including test and support equipment. This appendix is a mandatory part of this standard. The information contained herein is intended for compliance. These requirements are applicable for all maintenance levels through overhaul (depot), including DMWRs/NMWRs.

A.2 APPLICABLE DOCUMENTS.

This section is not applicable to this appendix.

A.3 DEFINITIONS.

A.3.1 Acronyms used in Appendix A. The acronyms used in this appendix are defined as follows:

CBT	Computer Based Training
COE	Common Operating Environment
COTS	Commercial Off the Shelf Software
DVD	Digital Video Disc
MSD	Maintenance Support Device
ODA	Open Document Architecture
ODIF	Open Document Interchange Format
PC	Personal Computer
PDA	Personal Digital Assistant
SATCOM	Satellite Communications
TIFF	Tiled Image File Format
TOC	Table of Contents
VIN	Vehicle Identification Number

A.3.2 Annotations. Annotations are the ability of the system administrator or user to place special notes within a manual. These notes can be public information for all users such as special information that requires rapid deployment to the manual holders like “Advance Change Notices.” They also can be private notes needed only by the user to assist in their training or in the performance of their duties.

A.3.3 Audit trails. Audit trails are the ability of the IETM to know where the user has navigated within the IETM.

Source: https://assist.dla.mil -- Downloaded: 2016-12-05T17:12Z
Check the source to verify that this is the current version before use.

A.3.4 Autonomic logistics. A system that acts without human intervention and consists of two primary components: a Prognostics and Health Management System and a Joint Distributed Information System. The Prognostics and Health Management System collects information while the weapon system is in operation using sensors and diagnostics to detect faults and impending faults. Reasoning algorithms are used to determine the causes of the faults. The system detects degrading performance and thus can forecast the requirement to replace a component prior to its predicted failure. The Joint Distributed Information System communicates this information immediately through the logistics infrastructure, automatically acquiring the spare parts, tools, and manpower.

A.3.5 Bookmark. Bookmarks are the capability to mark areas of interest to allow quick access. In today's environment, the terminology bookmark has been expanded to include "favorites" and "shortcuts."

A.3.6 Cascading menus. A cascading menu is the child of the first menu item selected. In a both the drop-down menu format and the pop-up menu format, the child menu appears next to the first menu item selected. There may be several levels of cascading menus.

A.3.7 Context filtering. Context filtering is when the presentation system automatically displays the relevant information applicable to the existing situation. For an example, only a specific piping system would be displayed in a compartment diagram or the level of instructions would be filtered based on the users level of ability (novice vice expert).

A.3.8 Delivery. The method of moving technical data from a contracted vendor to the Government.

A.3.9 Dialogs. Dialogs are the pop-ups and in-line collection mechanisms for gathering information for the IETM from the user.

A.3.10 Diagnostics. Maintenance procedures that result in the identification of a repair; troubleshooting. May or may not be assisted with hardware/software tools.

A.3.11 Dialog box. A method for IETM to request and receive input from the user. A separate window displays a request and includes an area to input a response.

A.3.12 Distribution. The method of moving technical data from an initial point to all the end users of the technical data.

A.3.13 Drilling down. The process of navigating from broader focused content to more specific and detailed content.

A.3.14 Element. A single discrete item in an IETM environment.

A.3.15 Embedded. Describes hardware and or software which forms a integral part/component of some larger system and which is expected to function without human intervention. An embedded system usually does not include peripherals (e.g. keyboard, monitor, storage etc.). Embedded systems most often will provide real-time response.

A.3.16 E-tool. An electronic device used for displaying technical data.

A.3.17 Filtering. A process that narrows the displayed data to show only a specific and desired sub-set of data. As an example, the complete technical data for an aircraft can be filtered to only display to the user the data that applies to a requested tail-number.

Source: https://assist.dla.mil -- Downloaded: 2016-12-05T17:12Z
Check the source to verify that this is the current version before use.

A.3.18 Fly through. A virtual three-dimensional navigation of a solid object. The user has the ability to control the perspective, direction and location of the displayed view of an object. The user also has the ability to virtually move through the object by dynamically changing the perspective, direction and location of the display.

A.3.19 Frame Data. An interrelated block of textual and/or graphical data that is presented in the inner shell content pane(s).

A.3.20 Guide post. The guide post allows the user to get to and initiate special advanced functions or to return to the standard default user interface.

A.3.21 Hot reference. A link to another location. A hot reference can be textual or graphical.

A.3.22 Hotspot. An area of a graphic or a section of text, that activates a function when selected. Hotspots are used to invoke objects (i.e. multimedia, programs, applications, scripts etc.), where selecting a hotspot can display a graphic, run a video, or open a new pane of information.

A.3.23 Human factor issues. An area of study concerned with the interaction between humans and computers. Includes efforts to most effectively design software interfaces to be most easily understood and efficiently used.

A.3.24 Inference engine. A computer program that, based on user or other input, determines the correct sequence to display technical data in an IETM (also called a logic engine).

A.3.25 In-line. Components such as frames, dialog boxes, figures, graphics, icons which are arranged sequentially to form a unit from overall parts.

A.3.26 Inner shell. The inner shell is the portion of the IETM, within the viewer shell, provided as the client application display area. This is the only portion of the screen real-estate which is under the TM author's control.

A.3.27 Linking. The connection of two locations in a document to form a cross-reference.

A.3.28 Logic engine. A computer program that, based on user or other input, determines the correct sequence to display technical data in an IETM (also called an inference engine).

A.3.29 Maintenance session. The sum of all maintenance tasks completed during a single user's shift while keeping an IETM open and active.

A.3.30 Navigation. The act of traversing through technical data. Navigation may be accomplished via software inherent items (next and previous buttons) or through technical data inherent items (links).

A.3.31 Navigation panel. This part of the inner shell provides a main menu bar of the necessary common functions and/or options.

A.3.32 Near real time. Access to updated data at or near the time of content approval and posting. Network connectivity is required to achieve near real time access to data.

A.3.33 Online environment. The virtual environment contained within a computer and it's connected (networked) devices.

A.3.34 Outer shell. The outer shell is the portion of the screen that surrounds the Inner Shell. This part of the screen should not be modified or controlled by the TM author.

Source: https://assist.dla.mil -- Downloaded: 2016-12-05T17:12Z
Check the source to verify that this is the current version before use.

A.3.35 Pane. A pane is an independent, rectangular, bordered region within the main content area of the inner shell. For example, in a main content area with 2 panes, one pane could contain a figure and the second pane the narrative information for that figure. The later pane could be designed to scroll the narrative information independent of the figure.

A.3.36 Persistent annotations. Annotations that are captured and retained for later use.

A.3.37 Personal Digital Assistant (PDA). A hand-held electronic device capable of displaying IETMs.

A.3.38 Point and click. The functionality of selecting a process (like a link) by use of a mouse or other input device.

A.3.39 Pop-up menus. Pop-up menus are menus that the user specifically invokes by right mouse clicking. The pop-up menu appears at the cursor location.

A.3.40 Prognostics. Procedures that focus on preventative maintenance and care of equipment. May include health monitoring and linkage to autonomic logistics systems.

A.3.41 SATCOM. Satellite Communications.

A.3.42 Scrollable. A feature that is used to display text or graphics that exceed the length or width of the data pane. A visual cue (vertical or horizontal scroll bar) indicates that additional text or graphics is available for viewing. The vertical scroll bar is used to move through the text or graphics that exceed the length of the data pane. The horizontal scroll bar is used only to display graphics and tables that exceed the width of the data pane. The user may also have the capability to move through textual information, one line at a time, through the use of the SCROLL UP and SCROLL DOWN functions..

A.3.43 Screen stacking. Screen stacking is when there are several windows open at the same time that are stacked one on top of each other in a staggered fashion. Screen stacking can confuse the novice user and is to be avoided.

A.3.44 Search. A navigational method to locate and display desired information via the use of processes that match results to user requests.

A.3.45 Session control. Session control is the ability to stop and start an IETM session in the middle of work. For highly interactive IETMs, this involves saving the state of the session for later reload to re-establish the user session back to where it was before the interruption.

A.3.46 Sustainment. The processes and actions required to maintain technical data over its lifecycle.

A.3.47 Tool tip. A small pop up that appears and contains helpful information. Moving the mouse over a preprogrammed element generally activates a tool tip.

A.3.48 Tracking. The process of monitoring and retaining information about the navigational activities of a particular user or device.

A.3.49 Traverse. The process of navigating through an electronic document.

A.3.50 User session. The cumulative IETM -related activities of a single user from the point when the IETM use begins to the point when it ends uninterrupted by log-offs. A user session can be maintained by suspend/restart functionality.

Source: https://assist.dla.mil -- Downloaded: 2016-12-05T17:12Z
Check the source to verify that this is the current version before use.

A.4 GENERAL REQUIREMENTS.

A.4.1 IETM functionality requirements. The functionality requirements for IETMs provided in this appendix supplement the technical content requirements provided in Appendix B through Appendix G. These requirements shall apply for the presentation of technical manual information in a frame-based format on a computer display.

A.4.2 Physical IETM screen layout. The screen shall have an inner shell and an optional outer shell. The inner shell is the portion of the IETM, within the viewer shell, provided as the client application display area. The outer shell is the portion of the screen that surrounds the inner shell. FIGURE A-1 shows the layout of a system with an inner and outer shell. FIGURE A-2 shows the layout of a system having only an inner shell. The portion of the screen real-estate under the TM author's control is the inner shell. The TM author should not attempt to modify or control the outer shell except that when the acquiring activity requires an outer shell, the title bar shall be modifiable. The inner shell contains specific regions as illustrated in FIGURE A-2. These regions are:

a. Guide post
b. Table of Contents Panel
c. Classification Bar
d. Navigation Panel
    (1) Subtitle Bar
    (2) Main Menu Bar
    (3) Project Specific Bar
e. Main Content Area
f. Status Bar

Source: https://assist.dla.mil -- Downloaded: 2016-12-05T17:12Z
Check the source to verify that this is the current version before use.

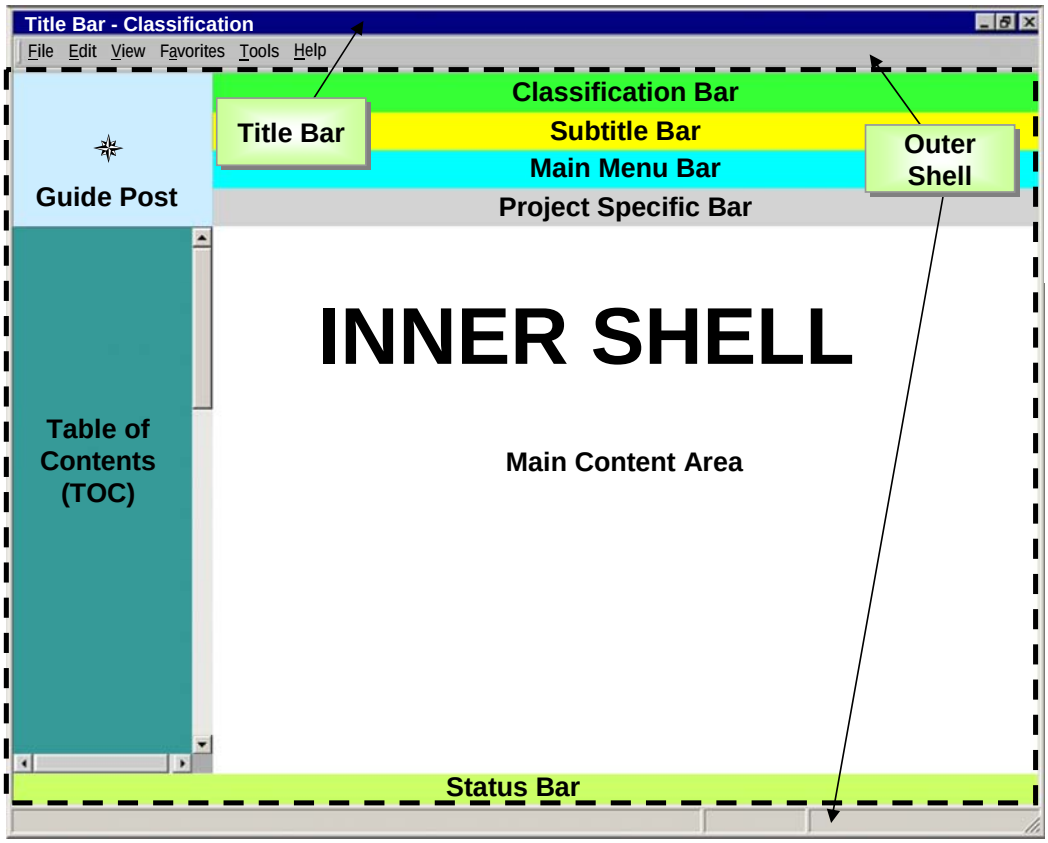

FIGURE A-1. **System with inner and outer shell.**

FIGURE A-2. **System with inner shell.**

Source: https://assist.dla.mil -- Downloaded: 2016-12-05T17:12Z
Check the source to verify that this is the current version before use.

A.4.2.1 General inner shell layout. Within the inner shell is an optional guide post in the upper left hand corner and to the right of the guide post is an optional classification and a navigation panel. On the left side of the inner shell below the guide post or navigation panel is a resizable area to display list of contents, list of illustrations, list of tables, etc as selected. The navigation panel shall be divided into the subtitle bar, the main menu bar and the project specific bar in that order. The optional status bar shall be located at the bottom of the inner shell. The rest of the inner shell shall contain the main content area (refer to FIGURE A-2).

A.4.2.2 Guide post. When specified by the acquiring activity, a guide post shall be provided (refer to FIGURE A-2). The guide post provides a special mechanism for navigation and preferences. For example, the guide post may provide a menu allowing the user to toggle screen areas, such as the table of contents (TOC), on and off. The guide post itself may be toggled on and off but shall always be accessible, when specified.

a. When toggled off, the guide post shall provide the following:
   (1) Be accessible by a right mouse click from anywhere within the inner shell.
   (2) Be easy to find by the user. This could be achieved through an icon such as a compass rose or by a right mouse click menu. Selecting this area shall provide a guide post function menu.
   (3) Be large enough to be visible and user selectable. For example, when the TOC panel is toggled off the width of the guide post shall still be visible and accessible.
b. When toggled on the guide post shall provide the following:
   (1) Displayed in the upper left corner of the inner shell.
   (2) Resized with the TOC panel, navigation panel, and classification bar.
   (3) An icon such as a compass rose may be used to depict the guide post area.

A.4.2.3 Guide Post Functions. Right mouse clicking in the guide post area shall provide the following guide post functions menu via a pop-up (refer to A.5.2.3.10.11 for a description of each function).

a. Reset user interface to standard default (required).
b. Minimize IETM (optional).
c. Print Frame (optional).
d. Change to page view (optional).
e. Open new IETM (optional).
f. Suspend (optional).
g. Restart (optional).
h. View revision summary (required).
i. Back (optional).
j. Forward (optional).
k. Abort browse mode (optional).
l. Toggle screen panels/bars on and off (optional).
m. Drill up/drill down (required).

Source: https://assist.dla.mil -- Downloaded: 2016-12-05T17:12Z
Check the source to verify that this is the current version before use.

n. Other custom functions (optional).

o. Exit Guide post (required).

A.4.2.4 Table of Contents (TOC). The area on the left side below the guide post or navigation panel is the area where the TOC shall appear (refer to FIGURE A-2). This area shall have a resizable right-side border (so that the TOC area can be reduced in size to the left). The TOC panel may be toggled on and off. When the user hovers the cursor over a TOC item, the full name of the TOC item shall appear. Access shall be provided via a hierarchical breakdown such as, system/subsystem, functional, physical hierarchy, or by means of graphical interfaces (refer to A.5.2.3.7.5).

A.4.2.5 Classification bar. The classification bar is mandatory if classification exists and shall not be toggled off. The bar shall appear as the top most bar of the inner shell, and when the guide post is shown to the right of the guide post. If the IETM content is classified, security markings shall be displayed in the classification bar as well as the title bar of the outer shell. Security markings and color are described in the A.4.3.2.

A.4.2.6 Navigation panel. The navigation panel shall consist of three horizontal bars in the following sequence; a subtitle bar, a main menu bar, and a project specific bar. The navigation panel shall appear as follows:

a. Above the main content area.

b. To the right of the guide post when the guide post is shown.

c. Under the classification bar when the classification bar is shown.

d. The position of the navigation panel shall, as far as possible, remain consistent throughout the application.

A.4.2.6.1 Subtitle bar. When used the subtitle bar shall appear as follows:

a. If there is no outer shell, the subtitle bar is mandatory and shall not be toggled off.

b. If there is no outer shell, the subtitle bar in the navigation panel shall contain the work package title or if not currently in a work package, the information title

c. If there is an outer shell, the subtitle bar is optional and may be toggled on and off.

d. The subtitle bar may be used for additional identifying information.

A.4.2.6.2 Main menu bar.

a. The main menu bar is mandatory and shall not be toggled off.

b. The main menu bar shall provide the following minimum set of mandatory navigation and control functions, which shall be made available to the user and common to all IETMs.

(1) Previous (refer to A.5.2.3.8.11)

(2) Next (refer to A.5.2.3.8.11)

(3) TOC (refer to A.5.2.3.7.5)

(4) History (refer to A.5.2.3.8.10)

(5) Search (refer to A.5.2.3.8.13)

(6) Print (refer to A.5.2.3.9)

(7) Feedback (refer to A.5.2.3.5.1)

Source: https://assist.dla.mil -- Downloaded: 2016-12-05T17:12Z
Check the source to verify that this is the current version before use.

(8) Exit (refer to A.5.2.3.8.3)

(9) Help (refer to A.5.2.3.10.4)

c. The nine mandatory functions shall be presented graphically on the main menu bar (refer to FIGURE A-3 and FIGURE A-4). They shall appear, left justified, in exactly the order shown (i.e., Previous, Next, TOC, History, Search, Print, Feedback, Exit, Help).

d. The main menu bar may contain additional project functions appearing to the right of the nine mandatory functions. Additional functions may optionally be added to the project specific bar as shown below:

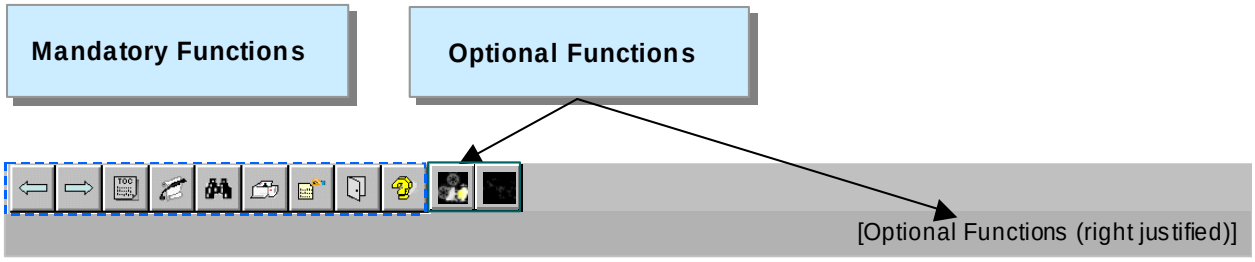

FIGURE A-3. Placement of project functions.

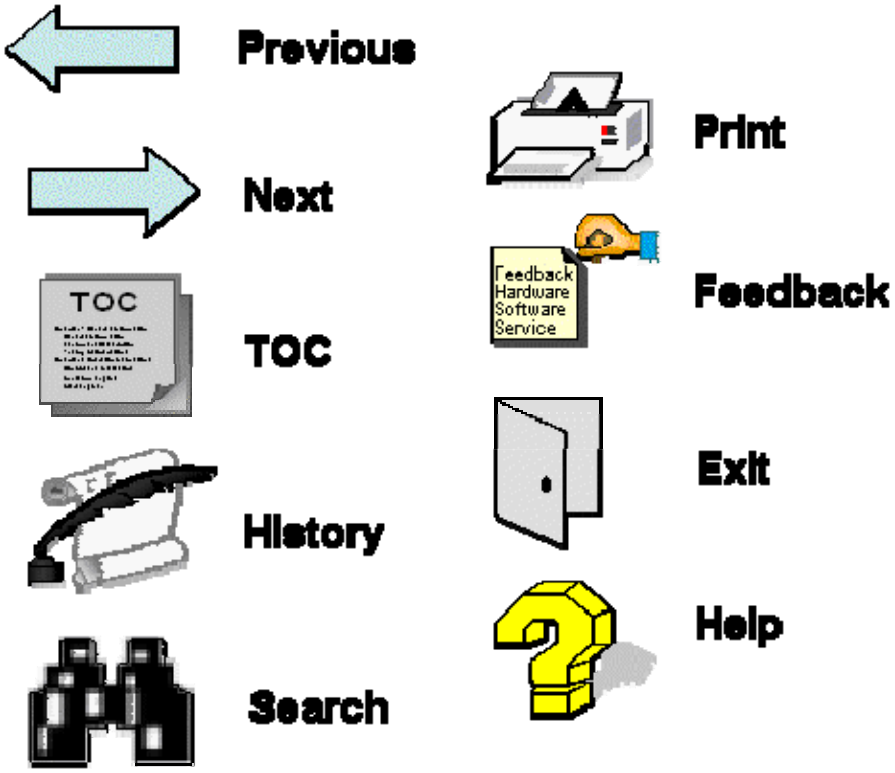

FIGURE A-4. Required function icons.

e. Cascading menus may appear as a child of a function when selected. In a drop-down menu, this appears next to the function selected. There may be several levels of cascading menus. Functions that are not active during any rendering shall be presented as disabled (grayed out).

Source: https://assist.dla.mil -- Downloaded: 2016-12-05T17:12Z
Check the source to verify that this is the current version before use.

f. When a function is not available, it shall be grayed out. This is so users can depend on these items appearing at a standard location in a standard order.

A.4.2.6.3 Project specific bar.

a. The project specific bar can be used if additional functions are required. Consideration should be given for placement of functions on the project specific bar with respect to main menu bar functions to minimize potential for making incorrect selections (for example, the project specific functions may be oriented so that the functions are right justified).

b. The project specific bar is optional and may be toggled on and off. Functions that are not active during any rendering shall be presented as disabled (grayed out).

c. Cascading menus may appear as a child of a function when selected. In a drop-down menu, this appears next to the function selected. There may be several levels of cascading menus.

A.4.2.7 Main content area. The main content area contains the text and graphics of the IETM, specifically excluding the table of contents panel, guide post, classification bar, navigation panel and status bar. This main content area may be divided into no more than 3 panes as shown in FIGURE A-5 through FIGURE A-8. If specified by the acquiring activity, panes shall be resizable.

FIGURE A-5. A single pane main content area.

Source: https://assist.dla.mil -- Downloaded: 2016-12-05T17:12Z
Check the source to verify that this is the current version before use.

FIGURE A-6. A left and right dual pane main content area.

FIGURE A-7. A upper and lower dual pane main content area.

Source: https://assist.dla.mil -- Downloaded: 2016-12-05T17:12Z
Check the source to verify that this is the current version before use.

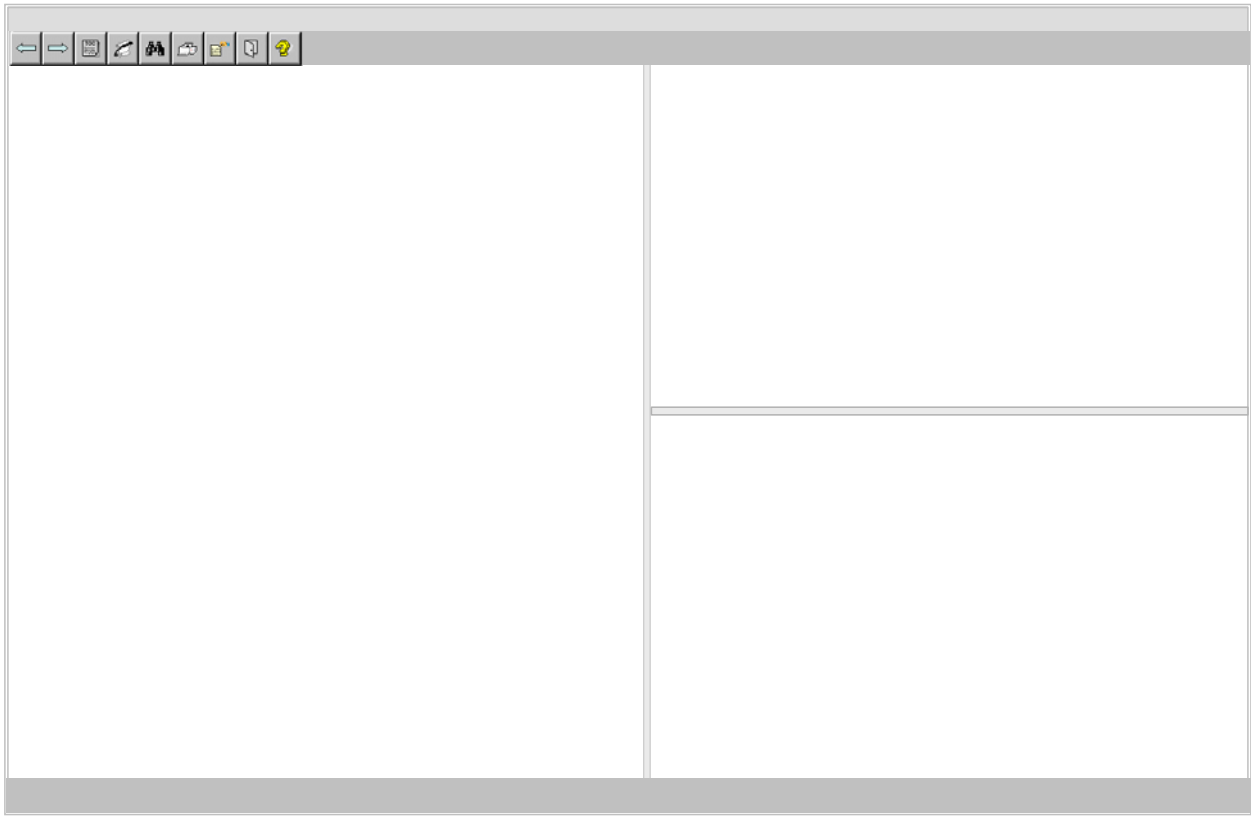

FIGURE A-8. A three pane main content area.

A.4.2.8 Status bar. The status bar shall be a horizontal bar located at the bottom of the inner shell. The status bar shall contain status information including status indicators and icons for active (persistent) warnings, cautions, and notes. The status bar may be toggled on and off when there are no persistent alert icons. The status bar shall not be toggled off when persistent alert icons are displayed.

A.4.2.9 Title bar. The use of a title bar in the outer shell shall be mandatory if there is an outer shell. The title bar shall display the work package title or if not in a work package use the information title. If the IETM content is classified, security markings shall be displayed in the title bar as well as in the classification bar.

A.4.2.10 Screen sizes. Proper planning for the size and resolutions of various devices up front in the planning stages makes life-cycle sense as the presentation technology is always undergoing change (e.g., terminals, desktops, laptops, personal digital assistance devices, etc). Refer to MIL-HDBK-1222 for additional information on screen sizes.

A.4.3 Style and format on the display.

A.4.3.1 Text colors/background. The text shall be black except as noted elsewhere. Background shall be white except as noted elsewhere. These colors aid printing without loss of content. There may be operational exceptions such as night operations and where color has special meaning. Use the safe color palette (refer to inner shell colors in MIL-HDBK-1222) to insure appropriate safe colors upon fielding to 8-bit devices such as PDAs.

Source: https://assist.dla.mil -- Downloaded: 2016-12-05T17:12Z
Check the source to verify that this is the current version before use.

A.4.3.1.1 Standard text/fonts. TABLE A-I provides the requirements for font standardization of IETMs delivered to the end-user.

TABLE A-I. Standard IETM fonts.

Electronic Presentation	Normal Font	San serif (i.e. Arial, Helvetica, etc.) For example: This is Arial. This is Helvetica.
	Minimum Size	Eight (8) points For example: This is 8 pts Arial.
	Fixed Font (if needed)	Mono-spaced (i.e., Courier New, Letter Gothic, `etc.)` For example: `This is Courier New. This is Letter Gothic.`
Hardcopy Presentation	Normal Font	Serif or San serif (i.e. Times New Roman, Arial, etc.) For example: This is Times New Roman. This is Arial.
	Minimum Size	Eight (8) points For example: This is 8 pts Arial.
	Fixed Font (if needed)	Mono-spaced (i.e. Courier New, Letter Gothic, etc.) For example: `This is Courier New. This is Letter Gothic`

A.4.3.1.2 Custom developed fonts. The fonts that the acquiring activity agrees are needed shall be made available as a library of re-useable fonts.

A.4.3.2 Security markings. Whenever classified and/or distribution restricted information is displayed an indication of the highest classification/distribution level in the pane shall be made within the inner shell classification bar and if applicable, outer shell title bar. Technical data developed using this standard shall have security classification markings in accordance with DOD 5220.22-M or 5200.1-R. TABLE A-II and TABLE A-III provides the classified and distribution restricted marking requirements.

Source: https://assist.dla.mil -- Downloaded: 2016-12-05T17:12Z
Check the source to verify that this is the current version before use.

TABLE A-II. Classification bar - Classification colors and markings.

SECURITY LEVEL	CLASSIFICATION BAR	COLOR AND MARKING
Unclassified	**Text**: No text unless distribution markings are required. **Color**: Light-Green (#00CC00) **Usage**: Shall be used if highest level in pane is unclassified and in a classified manual. If entire manual is unclassified, the classification bar is not required.	
Confidential	**Text**: "CONFIDENTIAL" in black text and centered in the classification bar. Additional text for distribution markings. **Color**: Light-Blue (#33FFFF) **Usage**: Shall be used if highest level in pane is confidential.	CONFIDENTIAL
Secret	**Text**: "SECRET" in white text and centered in the classification bar. **Color:** Red (#FF0000) **Usage:** Shall be used if highest level in pane is secret.	SECRET
Top Secret	**Text**: "TOP SECRET" in white text and centered in the classification bar. **Color:** Orange (#FF9900) **Usage:** Shall be used if highest level in pane is top secret.	TOP SECRET

TABLE A-III. Classification bar - Distribution colors and markings.

DISTRIBUTION	CLASSIFICATION BAR	COLOR AND MARKING
Unclassified – For Official Use Only (FOUO)	**Text**: "FOUO" in black text and centered in the classification bar. **Color:** Light-Green (#00CC00) **Usage:** FOUO is a distribution restriction	FOUO
Confidential – For Official Use Only (FOUO)	**Text**: "CONFIDENTIAL-FOUO" in black text and centered in the classification bar. **Color:** Light-Blue (#33FFFF) **Usage:** FOUO is a distribution restriction	CONFIDENTIAL-FOUO
Unclassified – No Foreign (NOFORN)	**Text**: "NOFORN" in black text and centered in the classification bar. **Color:** Light-Green (#00CC00) **Usage:** NOFORN is a distribution restriction	NOFORN
Confidential – No Foreign (NOFORN)	**Text**: "CONFIDENTIAL-NOFORN" in black text and centered in the classification bar. **Color:** Light-Blue (#33FFFF) **Usage:** NOFORN is a distribution restriction	CONFIDENTIAL-NOFORN

A.4.3.3 Front and rear matter. Information that is normally considered part of the front and rear matter but are typically not part of the page-based table of contents, shall be accessible from the IETM's table of contents or the navigation panel.

Source: https://assist.dla.mil -- Downloaded: 2016-12-05T17:12Z
Check the source to verify that this is the current version before use.

A.4.3.4 Revisions. Revision summaries are required and shall be accessed via the table of contents and may also be displayed from an icon on the navigation panel.. The provided revision information shall have links to where data has changed except for any IETM functional and cosmetic feature changes which shall be described only. When a subsequent revision is prepared, the previous revision summary shall be removed and only the new revision information shall be provided. The user shall have the option to view revision markings within the revised IETM.

A.4.3.4.1 Revision markings. Revision markings to distinguish changed information shall be indicated by a vertical bar opposite the updated, deleted, or added text (see 4.8.27.1). Revision bars shall only be displayed for the current revision and previous revision bars shall be removed.

A.4.4 Hotspots/Links.

A.4.4.1 Textual hotspot. Textual hotspots shall be visually indicated. When highlighting text for selectable elements (hotspots), use color changes or increase in background intensity. There shall be an indication that the hotspot has been visited or followed. Color and style guidance refer to MIL-HDBK-1222. The text hotspot should include type, number, and title (e.g., 'See Video 7-3, Disassembly Procedures').

A.4.4.2 Icon hotspot. An icon may be used for non-textual reference. TABLE A-IV identifies the standardized hotspot icons that shall be used. In order to view the icons, the following fonts are required as the standard installation for deployed systems: Monotype Sorts, Monotype Sorts 2, Webdings, Wingdings, Wingdings 2, and Wingdings 3. Additional icon hotspots shall be approved by the acquiring activity.

TABLE A-IV. Standard Hotspot Icons.

ELEMENT	DESCRIPTION	INDICATOR	ICON
GENERAL HOTSPOT ICONS			
GOTO	The user is redirected to the referenced information and does not return at the conclusion of the referenced information (possibly through history, but return here is not guaranteed). Clear the GOSUB indication if set in the status bar.	**Icon**: Arrow pointing down. (Wingdings 3 #135) **Text**: Goto (Optional) **Location:** Content pane	↓ Goto
GOSUB	The user is redirected to the referenced information and does return at the conclusion of the referenced information. Set the GOSUB indication if set in the status bar.	**Icon**: Arrow pointing both left and right. (Wingdings 3 #049) **Text**: Gosub (Optional) **Location:** Content pane	↔ Gosub
Acronyms	Link to acronym definition	**Icon**: aA Symbol (Webdings #062) **Text**: Acronyms (Optional) **Location**: Content pane	AA Acronyms
Abbreviation	Link to abbreviation definition	**Icon**: aA Symbol (Webdings #062) **Text**: Abbreviations (Optional) **Location**: Content pane	AA Abbreviations
External Object	Link to External Object	**Icon**: Lightning Bolt (Webdings #126) **Location**: Content pane	↯

Source: https://assist.dla.mil -- Downloaded: 2016-12-05T17:12Z
Check the source to verify that this is the current version before use.

TABLE A-IV. Standard Hotspot Icons.

ELEMENT	DESCRIPTION	INDICATOR	ICON
SUPPORTING HOTSPOT ICONS			
Relational or reference	Related or reference materials (possibly more than one) is available. Functions same as a GOSUB.	**Icon**: Book Stack (Webdings #168) **Text**: Related Materials (Optional) **Location:** Content pane	Related Materials
Call Supervisor or Call QA	Call supervisor for help or QA inspection	**Icon**: Telephone (Wingdings 2 #039) **Text**: Call QA/Supervisor **Location:** Content pane	Call
Check Supply for Part	Link to check supply for a part's availability.	**Icon**: Supply Truck (Webdings #118) **Text**: Supply (Optional) **Location**: Content pane	Supply
Part	Link to part information	**Icon**: Number 10 in a circle (Wingdings 2 #126) **Text**: Parts (Optional) **Location**: Content pane	Parts
Diagnostics	Link to diagnostic tasks	**Icon**: +/- **Text**: Diagnostics (Optional) **Location:** Content pane	+/- Diagnostics
Support Equipment	Link to support equipment	**Icon**: Waving Flag (Wingdings #079) **Location**: Content pane	
Training	Link to training or refresher material	**Icon**: Schoolhouse (Webdings #071) **Text**: Training (Optional) **Location**: Content pane	Training
GRAPHIC, MULTIMEDIA AND TABLE HOTSPOT ICONS			
Graphic	Link to graphic	**Icon**: Still Camera (Webdings #181) **Text**: Graphic (Optional) **Location**: Content pane	Graphic
Table	Link to table	**Icon**: Black square surrounded by two additional squares (Wingdings 2 #170) **Location**: Content pane	
Wiring Diagrams	Link to wiring or hydraulic diagram	**Icon**: Off Page Connector with X inside (Wingdings #214) **Text**: Wiring (Optional) **Location**: Content pane	Wiring
Multimedia	Link to multimedia	**Icon**: Movie Projector (Webdings #184) **Text**: Show (Optional) **Location**: Content pane	Show
Full Motion Video	Link to Full Motion Video	**Icon**: Clapboard (Webdings #183) **Text**: Video (Optional) **Location**: Content pane	Video

Source: https://assist.dla.mil -- Downloaded: 2016-12-05T17:12Z
Check the source to verify that this is the current version before use.

TABLE A-IV. Standard Hotspot Icons.

ELEMENT	DESCRIPTION	INDICATOR	ICON
Animation	Link to Animation	**Icon**: Comedy and Tragedy Masks (Webdings #174) **Text**: Animation (Optional) **Location**: Content pane	Animation

A.4.4.3 Links to text. Reference to narrative text shall require a single click of a text hotspot (refer to A.4.4.1) or an icon hotspot (refer to A.4.4.2) and shall display the referenced text in the current pane.

A.4.4.4 Links to graphics and tables.

a. Reference to a figure or table not in-line shall require a single click of a text hotspot (refer to A.4.4.1) or an icon hotspot (refer to A.4.4.2) and shall display the object in a separate panning/ zooming pane or window.
b. References to a figure or table in-line would display the object in a separate panning/ zooming pane or window. When in-line figure(s) and/or table(s) are large or numerous, an icon hotspot (refer to A.4.4.2) may be used in place of the object to speed up the display.
c. TOC references to a figure or table shall require a single click.

A.4.4.5 Links to multimedia. Links to view animations, videos, etc. shall require a single click of a text hotspot (refer to A.4.4.1) or an icon hotspot (refer to A.4.4.2). The object shall display in a separate pane or application window. The links or hotspots for multimedia (animation, video, etc.) clips shall preceded the step(s) to which they apply. A note shall also precede the step(s) to which the multimedia clips apply which tells the user to follow the written instructions after viewing the multimedia clips and which step(s) the multimedia clips apply to. Multimedia clips shall use the icons provided in Table A-IV.

A.4.4.6 Links in graphics. There shall be four acceptable modes of visual indication of links/hotspots in a graphic (refer to TABLE A-V).

a. Persistent visual indication that an area is a hotspot.
b. Cursor changes shape or color when cursor is over a hotspot.
c. Object changes shape or color when cursor is over a hotspot.
d. Pop-up appears while cursor is over a hotspot (e.g., parts information callout expands)

TABLE A-V. Hotspot in Graphics.

ELEMENT	DESCRIPTION	INDICATOR	SAMPLE
Persistent	Graphic objects are viewable persistent.	**Text**: Blue underlined text (unvisited). Purple underlined text (visited) **Location**: Content pane	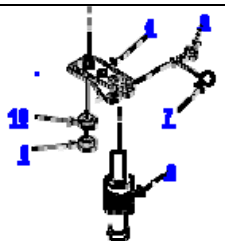

Source: https://assist.dla.mil -- Downloaded: 2016-12-05T17:12Z
Check the source to verify that this is the current version before use.

TABLE A-V. Hotspot in Graphics.

ELEMENT	DESCRIPTION	INDICATOR	SAMPLE
Cursor	Cursor changes to hotspot indication on a graphic	**Cursor:** Changes from standard cursor shape and/or color. **Location**: Content pane	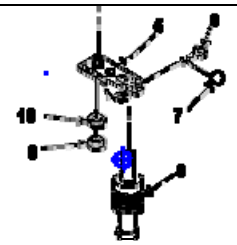
Object	Graphic object changes color when cursor is over hotspot.	**Object:** Changes color. **Location:** Content pane	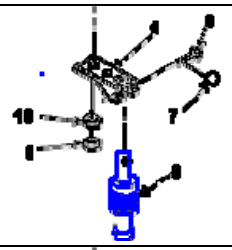
Pop-up Text	Cursor over hotspot generates pop-up text.	**Text:** Object description next cursor. **Location:** Content pane	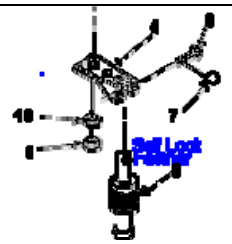

A.4.4.7 Hotspots in tables. Only the referencing text within a table cell shall be a hotspot. The entire cell shall not be a hotspot. Reference to a table cell or row shall scroll the table directly to the referenced cell or row. TABLE A-VI contains the requirements for tables appearing within the body of the IETM (in-line), and those appearing in their own separate window.

TABLE A-VI. Table navigation and display.

TABLE SECTION	FUNCTION	DESCRIPTION
General (Mandatory)	Access	View with a single click..
	Appearance	May view as in-line or separate pane. Adherence to this standard for content and appearance.
	References	TOC links shall be a single click directly to table. Links in the body or table to tables shall be normal hypertext. Example: See Table 3.5 Icon: (Optional) Black Square surrounded by 2 additional Squares ⧈ (Wingdings 2, #170). Example: See ⧈ Table 3.5
Headers	Appearance	The header shall always be visible so that it does not scroll away while rows are scrolled.
	Background	Preferred white color, but colors are optional (printing issue).
	Font	The same font as the body is preferred. **Bold** and/or larger fonts optional.
	Border	Borders should be same size lines as rest of table.
Cells (Mandatory)	Font	The same typeface shall be used throughout the table.
	Background	White background, other colors are optional (printing issue).

Source: https://assist.dla.mil -- Downloaded: 2016-12-05T17:12Z
Check the source to verify that this is the current version before use.

TABLE A-VI. Table navigation and display.

TABLE SECTION	FUNCTION	DESCRIPTION
	Border	Borders are none, single, or double lines. Small tabular text may have no lines, if controlled by style sheet.
	References	Footer Reference: Optional link from cell to the bottom applicable footer. Example: See Footnote 1 Below or 1 Hyperlink from a table cell shall be the reference text only, not the entire cell. Multiple hotspots within a cell shall be individually accessible.

A.4.5 User interface. The user interface requirements for session control, bookmarks, annotation browsing, etc. for highly interactive IETMs are provided in A.4.5.1 through A.4.5.10.

A.4.5.1 Session control. Session control is the ability to stop and start an IETM session in the middle of work. Session control shall involve saving the state of the session to re-establish the session back to the previous state before the interruption. IETMs shall support the "complete" (save and update history file) and "suspend/restart" functionality. The "abort" function shall only be allowed in "browse" mode on the end-user client. TABLE A-VII contain the session control standard icons list that are used either as icon buttons in or pull-down menu navigation panel. When specified by the requiring activity through the IETM functionality matrix (refer to A.5.2.3.1.1), all the following functionalities shall be provided.

a. The ability to suspend a session at any time (e.g., for a break or emergency) shall be provided.
b. A restart function shall be capable of restarting the session at the same point it was suspended.
c. At the time of restart, the user shall be advised that some key parameters/condition settings may be out-of-date.
d. The system shall support the three exit modes.
   (1) Complete (save and update history)
   (2) Abort (do not save or update history) (Browse mode only)
   (3) Suspend (save current session state and do not update history)

TABLE A-VII. Session standard icons.

SESSION	DESCRIPTION	INDICATOR	ICON
Complete	Normal exit save and update history. Clear state table.	**Icon**: Check Mark (Wingdings 2 #080) **Text**: Complete (Optional)	✓ Complete
Suspend	Save current state and do not update history.	**Icon**: Pause (two vertical bars) (Webdings #059) **Text**: Pause Session (Optional)	⏸ Pause Session
Restart	Reinstate previous suspended session.	**Text**: Session Restart	Session Restart
Abort	Browse only - Do not save session or update history. Clear state table.	**Icon**: Rain Clouds (Webdings #219) **Text**: Abort (Optional)	☂ Abort

Source: https://assist.dla.mil -- Downloaded: 2016-12-05T17:12Z
Check the source to verify that this is the current version before use.

A.4.5.2 Bookmarks. Bookmarks provide the ability to mark areas of interest and to allow quick access or referencing of the information. TABLE A-VIII describes the standardized bookmark icons and functions.

TABLE A-VIII. Bookmark functions and standard icons.

BOOKMARK	FUNCTION	INDICATOR	ICON
Create	Shall ask whether creating or navigating to Bookmark.	**Icon**: Open Book (Wingdings #038) **Location**: Navigation Panel.	
Goto	Shall ask whether creating or navigating to Bookmark Navigating to a bookmark, the TOC shall be updated and the content pane shall display bookmark destination.	**Icon**: Open Book (Wingdings #038) **Location**: Navigation Panel.	
Minimized	Indicates location is a bookmark.	**Icon**: Open Book (Wingdings #038) **Location**: Content pane.	

A.4.5.3 Annotations. Annotation provides the ability of the system administrator (public) or user (personal) to place a special note within an IETM. Public annotations shall be information (as authorized by the command) for all users, such as special information that requires rapid deployment to the manual holders like “Advance Change Notices”. Personal annotations shall only be for the user initiating the annotation, such as assistance in their training. TABLE A-IX details functions and icons that shall be part of the annotation function. When specified by the acquiring activity through the IETM functionality matrix (refer to A.5.2.3.2), all the following functionalities shall be provided.

a. A persistent visual indication shall denote an annotation exists.
b. The default annotation presentation shall initially appear minimized.
c. Levels of annotations (e.g., public, personal, etc.) shall be visually differentiated.

TABLE A-IX. Annotation functions and standard icons.

ELEMENT	FUNCTION	INDICATOR	ICON	
			PUBLIC	PERSONAL
Create User Note	A dialog box is displayed to insert the user note at the current cursor location.	**Icon**: Black (public) and blue (personal) hand with pen (Wingdings #063) **Location**: Navigation Panel.		
User Note minimized	Selecting opens the user note as a dialog message box.	**Icon**: Black (public) and blue (personal) hand with pen (Wingdings #063) **Location**: Content pane.		

A.4.5.4 Redline **(Review only)**. When specified by the acquiring activity through the IETM functionality matrix (refer to A.5.2), a redlining capability shall be available for use during the IETM reviewing cycle. For text, redlining shall provide the ability to identify a deletion by striking through the text, and an insertion by highlighting with a different text format (i.e. blue text and underlined). For graphics, redlining shall provide the capability to annotate graphics using an overlay freehand-type drawing facility. The comment annotation shall be used in conjunction with the redlining to denote reason for change. TABLE A-X details functions and icons that shall be part of the annotation function.

Source: https://assist.dla.mil -- Downloaded: 2016-12-05T17:12Z
Check the source to verify that this is the current version before use.

TABLE A-X. Redline functions and standard icons.

ELEMENT	FUNCTION	INDICATOR	ICON
Redline mode	Toggle on and off redline functionality.	**Icon:** Red pencil (Wingdings #033) **Location**: Navigation Panel	
Create Comment	A dialog box is displayed to insert the redline comment at the current cursor location.	**Icon** Piece of paper with upper right corner turned in (Wingdings 2 #047) **Location**: Navigation Panel.	
Comment minimized	Selecting opens the redline comment as a dialog message box.	**Icon**: Piece of paper with upper right corner turned in (Wingdings 2 #047) **Location**: Content pane.	

A.4.5.4.1 Browsing. Browsing is the ability to preview an IETM session prior to performing the work or task (Refer to A.5.2.3.10.8 for functionality requirements). When specified by the acquiring activity, the BROWSE PREVIOUS and BROWSE NEXT functions shall be required for all systems for which the NEXT and PREVIOUS functions set interactive system variables that are used to effect subsequent navigation through the IETM. The presentation system shall provide a distinct visual indication that the system is in browse mode (See TABLE A-XI).

TABLE A-XI. Browsing display locations and recommended icons.

ELEMENT	FUNCTION	INDICATOR	ICON
Begin	Initiates browse mode capability by single click on icon button. Denotes to user the system is in browse mode	**Icon**: Eyeglasses unselected (Wingdings #036) **Location**: Navigation panel	
Browse Previous	Act similar to PREVIOUS functions except no interaction system variables are set.	**Icon:** Double left pointing arrows (Wingdings 3 #072) **Location:** Navigation panel	
Browse Next	Act similar to NEXT functions except no interaction system variables are set.	**Icon:** Double right pointing arrows (Wingdings 3 #073) **Location:** Navigation panel	
Mode Indicator	Denotes to user the system is in browse mode.	**Icon**: Eyeglasses (Wingdings #036) **Text**: Browse Mode On **Location**: Status bar	Browse Mode On
	Denotes to user the system is not in browse mode.	**Icon**: Eyeglasses (Wingdings #036) with "no or don't" slash (Wingdings 2 #087) **Text**: Browse Mode Off **Location**: Status bar	Browse Mode Off
End	Ends browse mode capability by single click on icon button. Denotes to user the system is not in browse mode.	**Icon**: Eyeglasses unselected (Wingdings #036) **Location**: Navigation panel	

A.4.5.5 Dialog boxes. Dialog boxes are used to obtain information from the user and shall appear in the center of the screen. The appearance of dialog boxes within an IETM shall be consistent throughout the IETM. All dialog boxes shall contain dialog push buttons (Refer to A.4.5.5.3 for detailed information).

A.4.5.5.1 Dialog box types. Dialog boxes shall be one of five kinds: message, fill-in, menu, multiple-choice, or composite. Refer to A.4.5.5.1 through A.4.5.5.1.5 of different types of dialog boxes.

Source: https://assist.dla.mil -- Downloaded: 2016-12-05T17:12Z
Check the source to verify that this is the current version before use.

A.4.5.5.1.1 Message dialog box. A message dialog box shall be used when the acknowledgment by the user of certain notes, essential procedures, conditions, statements or important instructional data is deemed necessary. Only the push buttons “OK” and an optional “HELP” shall be used. Refer to FIGURE A-9 for example.

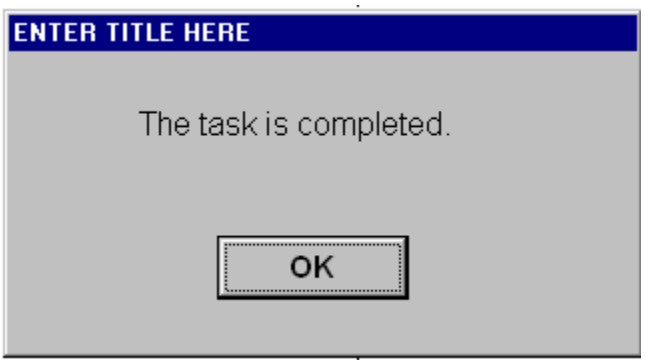

FIGURE A-9. Message dialog box.

A.4.5.5.1.2 Fill-in dialog box. The fill-in dialog box provides capability communicate to the IETM by prompting the user to enter text. When possible, the prompt and the data field shall be placed on the same line. Prompts shall be distinctively formatted. The OK push button shall be disabled when there are no characters entered and no defaulted values are in the data fields. This shall ensure the user has entered at least one character in the data field before the user selects “OK” push button and continues. Refer to FIGURE A-10 for example.

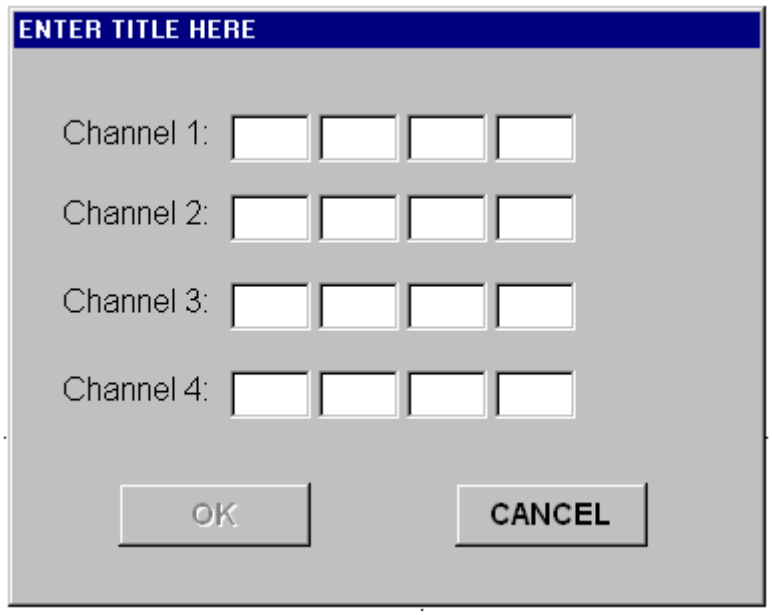

FIGURE A-10. Fill-in dialog box.

Source: https://assist.dla.mil -- Downloaded: 2016-12-05T17:12Z
Check the source to verify that this is the current version before use.

A.4.5.5.1.2.1 Number-range. An optional number-range shall provide an acceptable value range for fill-in data fields that requests only integer or real values. The acceptable values specified by the number-range may be displayed in the dialog box. When displayed, the number-range shall be in close proximity to the data field, such as appended to the prompt or directly below the data field. At a minimum, if the user enters a value outside of the number-range, a message dialog box shall be displayed to the user identifying the acceptable values. Upon acknowledging the message dialog box, the fill-in dialog shall be displayed to allow the user to enter a valid value. Refer to FIGURE A-11 for example.

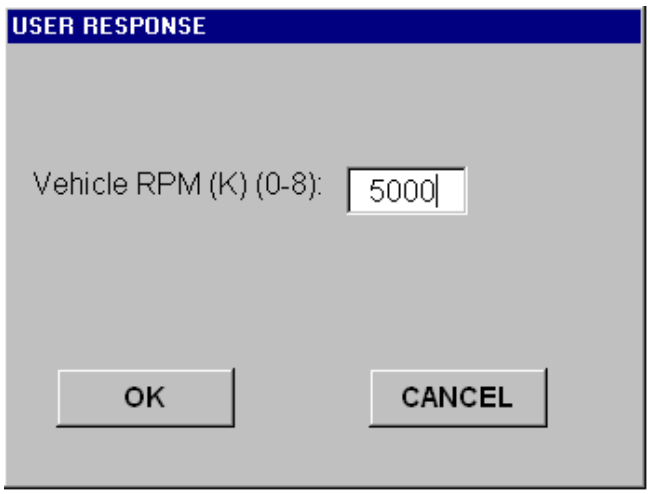

FIGURE A-11. Fill-in dialog box using number-range.

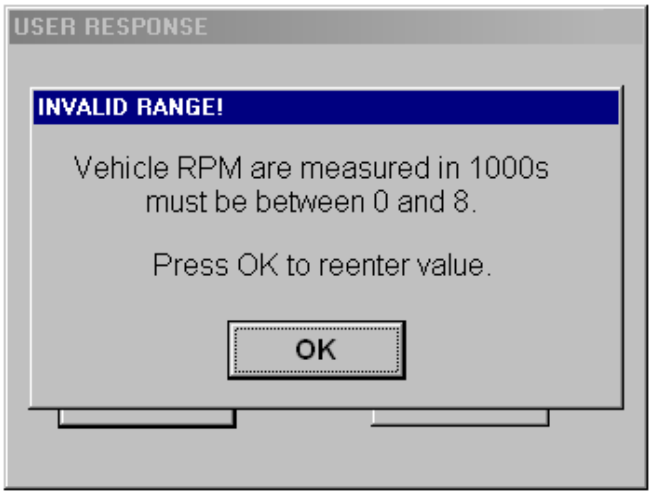

FIGURE A-11. Fill-in dialog box using number-range. - Continued

Source: https://assist.dla.mil -- Downloaded: 2016-12-05T17:12Z
Check the source to verify that this is the current version before use.

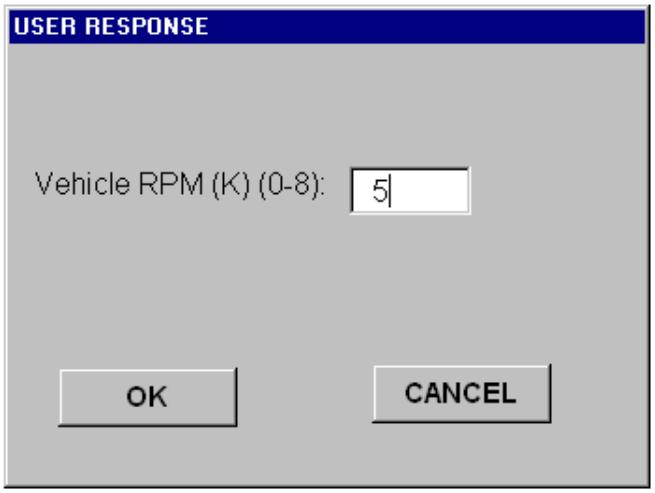

FIGURE A-11. Fill-in dialog box using number-range. - Continued

A.4.5.5.1.3 Menu dialog box. The menu dialog box shall be a selection list to choose one item from the list. The menu dialog box shall display a selection item preceded with a radio button. A radio button shall be a circle and is selected by clicking in the circle. A filled circle shall indicate that a choice has been made. When the user selects a different radio button, the previous radio button shall be cleared and the selected radio button shall be filled. The author may define a default selection and the radio button shall be filled. The OK push button shall be disabled until a radio button has been chosen. This shall ensure the user has selected a radio button before selecting the "OK" push button and continuing. Refer to FIGURE A-12 for example.

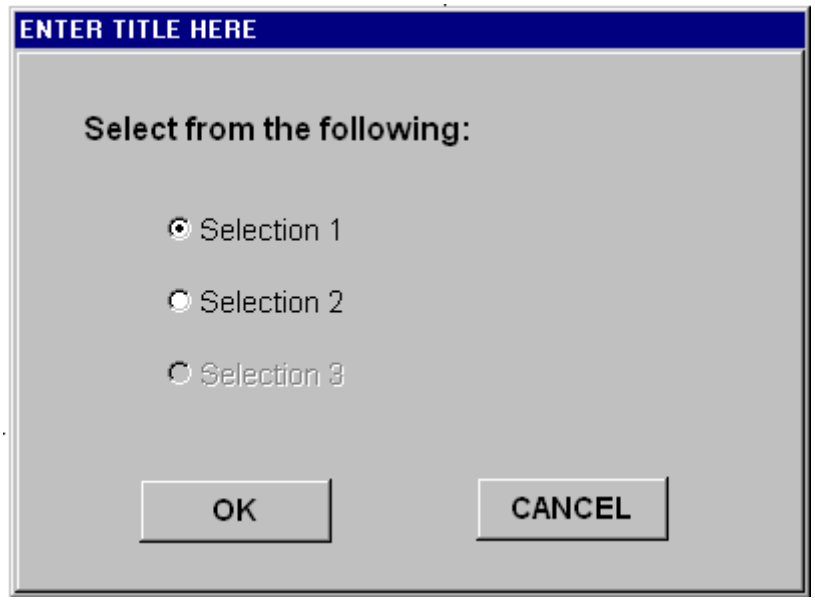

FIGURE A-12. Menu dialog box.

Source: https://assist.dla.mil -- Downloaded: 2016-12-05T17:12Z
Check the source to verify that this is the current version before use.

A.4.5.5.1.4 Multiple-choice dialog box. The multiple-choice dialog box shall be a selection list to choose at least one item from the list. The multiple-choice dialog box shall display a selection item preceded with a squared box and is selected by clicking in the square. A check in the box shall indicate that a choice has been made. When the user selects a different box, the previous checked box shall remain and the selected box checked. Selecting the checked box shall clear the box. The author may define a default selection and the box shall be checked. The OK push button shall be disabled until a box is checked. This shall ensure the user has selected at least one box before selecting the "OK" push button and continuing. Refer to FIGURE A-13 for example.

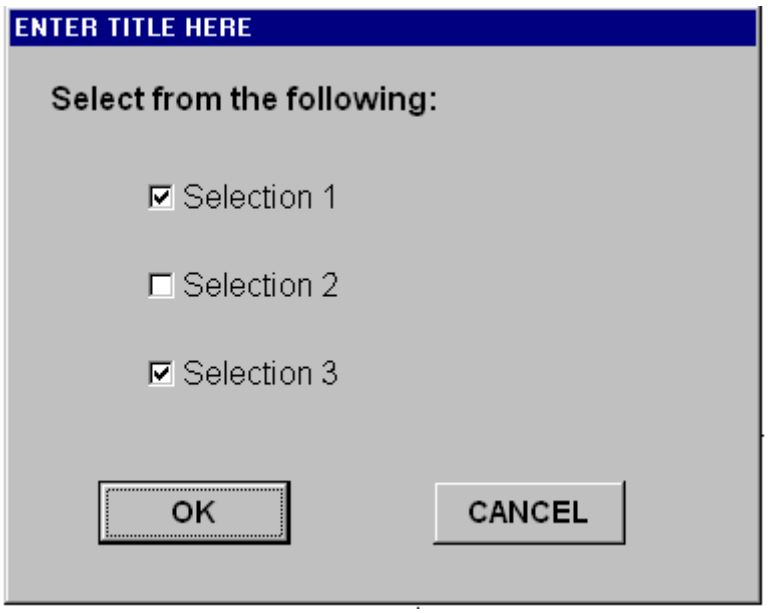

FIGURE A-13. Multiple-choice dialog box.

A.4.5.5.1.5 Composite dialog box. The composite dialog box is presented with any combination of fill-in, menu, and/or multiple-choice dialog boxes. Refer to FIGURE 14 for example.

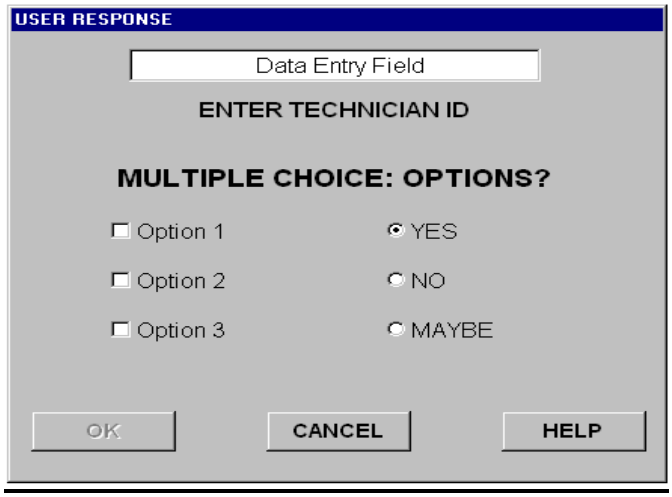

FIGURE A-14. Composite dialog box.

Source: https://assist.dla.mil -- Downloaded: 2016-12-05T17:12Z
Check the source to verify that this is the current version before use.

A.4.5.5.2 Dialog box title. When specified by the acquiring activity, dialog box titles shall be left justified at the top of the dialog box and displayed in uppercase letters. Titles shall be presented in a distinctive manner so they will not be confused with messages, response alternatives, or other text items (i.e. different background color).

A.4.5.5.3 Dialog push buttons. Dialog boxes shall contain graphical controls called push buttons. Dialog push buttons are used as a means for the user to communicate with the IETM. Push buttons can be: radio buttons (e.g., in single-choice menu dialog box), check boxes (e.g., in multiple-choice dialog box) or functions (e.g. the selectable function “OK” on an message dialog box). A push button shall be a word or graphic icon on the screen used to select or initiate an action. Push buttons shall be large enough allow positioning of the cursor on the push button. Push buttons shall provide visual feedback when selected. Push buttons shall be found on every type of dialog box. They shall each be single action entities. Push buttons shall indicate selections made or invoke a general action (e.g., CANCEL or OK). Push button shapes shall be consistent, such as a box, circle, or button. Function push buttons shall contain the name of the selection or action written inside of the shape. Common function push buttons (OK, CANCEL, HELP) shall be displayed along the bottom of the dialog box. The common function buttons shall correspond to completing the last selection before leaving the dialog box.

A.4.5.5.3.1 Common function push buttons. The common function push buttons shall be displayed in the following order centered along the bottom of the dialog box: "OK", and where they exist, "CANCEL" and "HELP". The “OK” push button shall communicate the entered or selected information to the IETM and proceed to the next action. The “CANCEL” push button shall not send user-inputted information to the IETM and the IETM shall return to its previous display. The “HELP” function shall provide further information about the current dialog box in message dialog box.

A.4.5.5.4 Dialog cursor movement. Cursor movement within dialog boxes shall be consistent throughout the IETM. The cursor shall move only to items, which require input from the user. The default location of the cursor (the location of the cursor when the dialog box is initially displayed) in a dialog box shall be at the first selectable item (uppermost). When only the selectable movement mode is used, it shall restrict the allowable cursor locations to the radio buttons, check boxes, the fill-in-the-blank, and the push buttons within the dialog box. Cursor forward movement shall be accomplished through the TAB key, ENTER key or pointing device, such as a mouse, trackball, or stylus. The user shall be able to move the cursor back within the dialog box either through the SHIFT-TAB key or pointing device. Pressing the ENTER key when the push button is highlighted shall perform the action associated with the push button (e.g. Pressing the ENTER key when the “**OK**” push button is highlighted is functionally equivalent to clicking the “**OK**” push button.)

A.4.5.6 Screen stacking. FIGURE A-15 illustrates screen stacking where multiple windows are opened and overlap each other. Screen stacking can confuse the user of the IETM and shall be avoided.

Source: https://assist.dla.mil -- Downloaded: 2016-12-05T17:12Z
Check the source to verify that this is the current version before use.

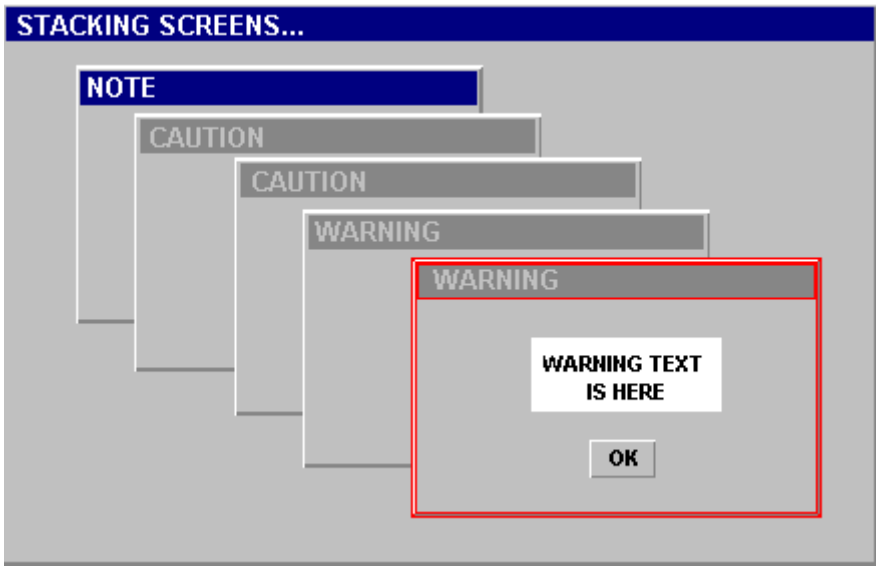

FIGURE A-15. Screen stacking.

A.4.5.7 Response time. The operating system usually handles the system busy indication. If the viewer is expected to be busy for more than 2 seconds, the cursor shall change to an hourglass until the busy condition passes. Once the busy condition passes, the cursor shall return to its previous form (refer to TABLE A-XII).

TABLE A-XII. Cursor modes.

CURSOR	INDICATOR	FUNCTION	SAMPLE
Waiting	**Icon**: Busy cursor **Location**: Entire viewer	The IETM is waiting more than 2 seconds to perform a task.	
Normal	**Icon**: Normal cursor **Location**: Entire viewer	Normal cursor mode.	

A.4.5.8 Audio control. When audio control functions (multimedia, voice input recognition, etc) are specified by the acquiring activity, the standard icons in TABLE A-XIII shall be used when applicable.

TABLE A-XIII. Audio Control Standard Icons .

ELEMENT	FUNCTION	INDICATOR	ICON
Access Volume Controls	Toggle on and off the audio controls.	**Icon**: Speaker (Webdings #088) **Location**: Navigation Panel	
Volume Up	Increase the volume to the audio	**Icon**: Rising Triangle (Wingdings 3 #112) **Location**: Navigation Panel	
Volume Down	Decrease the volume to the audio	**Icon**: Descending Triangle (Wingdings 3 #113) **Location**: Navigation Panel	
Mute	Toggle on and off mute	**Icon**: Speaker (Webdings #088) with “no or don’t” slash (Wingdings 2 #087) **Location**: Navigation Panel	

Source: https://assist.dla.mil -- Downloaded: 2016-12-05T17:12Z
Check the source to verify that this is the current version before use.

TABLE A-XIII. Audio Control Standard Icons .

ELEMENT	FUNCTION	INDICATOR	ICON
	Indicates the audio is muted.	**Icon**: Speaker (Webdings #088) with "no or don't" slash (Wingdings 2 #087) **Text**: Mute **Location:** Status bar	Mute
Play	Starts the playing of audio	**Icon**: Open Triangle (Wingdings 3 #119) **Location**: Navigation Panel	
Stop	Stops the playing of the audio	**Icon**: Open Square (Wingdings #111) **Location**: Navigation Panel	
Access Voice Input Recognition	Toggle on and off voice input recognition	**Icon**: Ear with sound coming in **Location**: Navigation panel	
Status Voice Input Recognition	Voice input recognition is on	**Icon**: Ear (Webdings #079) with sound coming in (Webdings #239) **Text**: Voice Recog On **Location**: Status bar	Voice Recog On
	Voice input recognition is off	**Icon**: Ear (Webdings #079) with sound coming in (Webdings #239) with "no or don't" slash (Wingdings 2 #087) **Text**: Voice Recog Off **Location**: Status bar	Voice Recog Off
Access Voice Output	Toggle on and off voice output	**Icon**: Head with sounds coming out (Webdings #151) **Location**: Navigation panel	
Status Voice Output	Voice output is on	**Icon**: Head with sounds coming out (Webdings #151) **Location**: Status bar	
	Voice output is off	**Icon**: Head with sounds coming out (Webdings #151) with "no or don't" slash (Wingdings 2 #087) **Location**: Status bar	

A.4.5.9 Graphical navigation. When graphical navigation functions are specified by the acquiring activity, the standard icons in TABLE A-XIV shall be used when applicable.

TABLE A-XIV. Graphical Navigation Standard Icons.

ELEMENT	FUNCTION	INDICATOR	ICON
Save to a disk	Save graphic to a disk	**Icon**: 3.5" Floppy disk (Wingdings #060) **Location**: Navigation panel	
Print	Print the graphic	**Icon**: Printer (Graphic) **Location**: Navigation panel	
E-mail	E-mail the graphic	**Icon**: Unopened envelope (Wingdings #042) **Location**: Navigation panel	
Save to a folder	Saving graphic to graphic/photo area folder	**Icon**: Folder (Wingdings #048) **Location**: Navigation panel	

Source: https://assist.dla.mil -- Downloaded: 2016-12-05T17:12Z
Check the source to verify that this is the current version before use.

TABLE A-XIV. Graphical Navigation Standard Icons.

ELEMENT	FUNCTION	INDICATOR	ICON
Zoom In	Toggle on and off graphic zoom in function.	**Icon**: Magnifying glass with plus (Graphic) **Location**: Navigation panel	
Zoom Out	Toggle on and off graphic zoom out function.	**Icon**: Magnifying glass with minus (Graphic) **Location**: Navigation panel	
Pan graphic	Toggle on and off pan graphic	**Icon**: Open hand (Wingdings #073) **Location**: Navigation panel	
	Move graphic in the pane.	**Icon**: Open hand (Wingdings #073) **Location**: Content pane	

A.4.5.10 Additional navigation. When additional navigation functions are specified by the acquiring activity, the standard icons in TABLE A-XV shall be used when applicable.

TABLE A-XV. Additional Graphical Navigation Standard Icons.

ELEMENT	FUNCTION	INDICATOR	ICON
Back	Navigate back through the previously viewed information.	**Icon**: Arrow Pointing up and left (Wingdings #197) **Location**: Navigation Panel	
Forward	Navigate forward through previously viewed information.	**Icon**: Arrow Pointing up and right (Wingdings #198) **Location**: Navigation Panel	
Undo	Undo last action.	**Icon**: Curled Arrow CCW (Wingdings 3 #081) **Location**: Navigation Panel	
Version information	Display the current IETM software version	**Icon**: Interstate sign (Webdings #100) **Location**: Navigation Panel	
Step Completed	The user completed the step.	**Icon**: Checkbox (Wingdings 2 #082) **Location**: Content pane	☑ Adjust

A.5 DETAILED REQUIREMENTS.

A.5.1 IETM functionality requirements. The requirements specified in this appendix are intended to bring about the following minimum results on a consistent basis in designing an IETM:

a. Designing a common look and feel.
b. Designing a standard user interface.
c. Standardizing the visual elements.

The specific level of functionality and user interaction to be provided in IETMs shall be in accordance with the functionality matrix requirements provided in A.5.2. If a completed functionality matrix is not provided by the acquiring activity, the contractor's recommended functionality shall be provided by filling out a functionality matrix and providing it to the acquiring activity for their review and approval.

A.5.2 Functionality matrix. The functionality matrix (TABLE A-XVII) is intended to allow IETM programs to define their requirements in language that is accepted and understood by industry.

Source: https://assist.dla.mil -- Downloaded: 2016-12-05T17:12Z
Check the source to verify that this is the current version before use.

A.5.2.1 Strategy pricing. For a competitive bid, it's anticipated that the bidders would provide the acquiring activity with pricing data based on the filled-out functionality matrix provided in the acquiring activity or provide a completed matrix back with pricing information that would enable detailed evaluation. Once pricing has been completed, the acquisition officer can review the pricing provided by the bidders with the intent that comparisons can be made from the completed matrices. These can serve as a basis for fact-finding as well. This matrix can help the acquisition manager evaluate the cost benefit associated with IETMs and trade off higher cost functionality requirements with those of lower cost.

A.5.2.2 Functionality matrix column definitions. The functionality matrix provides a complexity factor, identification of the category, name of the functionality, the requirement, and the paragraph reference that contains the definition of the functionality. The following paragraphs provide an explanation of each column.

A.5.2.2.1 Complexity factor. The Complexity Factor is a relatively weighted number assigned to each feature within the functional categories to indicate the abstracted complexity of a listed IETM feature when compared against the other features within that Functionality Category. A factor of one (1) being used as the baseline value for all measurements with all other factor values being a projected complexity of the listed value times greater than 1. For example, the "Full Word Search" feature of the "Navigational" Functional Category is listed as a 1 feature, while the "Key Word Search" feature is listed as a 2 feature. This would mean that the "Key Word Search" feature is considered to be twice as difficult to develop as the "Full Word Search". However, the "Local Data Annotation" feature also listed as a 2 feature is not comparable for complexity measurement against either the "Key Word Search" or the "Full Word Search" features because it is in the "Annotation" Functional Category and both of the others are in the "Navigational" Functional Category.

A.5.2.2.1.1 Linear. A linear IETM for some functionality provides a different complexity factor. An example is a "Fully Formatted/Book Version" which is not as complex as for a non-linear IETM. In some situations, a linear IETM cannot perform the function, in which case a not available (NA) is shown.

A.5.2.2.1.2 Non-Linear. A non-linear IETM for some functionality provides a different complexity factor than a linear IETM. An example is "Filter by Model Series" which is not as complex as for a linear IETM. In some situations, a linear IETM cannot perform functions that a non-linear IETM can, due to the nature of their functionality.

A.5.2.2.2 Category. Identifies the functionality category group by code. The category name and the paragraph number that contains the definition for that category is shown for each category code in TABLE A-XVI.

TABLE A-XVI. Functionality Matrix Categories.

Code	Category	Para. Ref.
Ac	Access	A.5.2.3.1
An	Annotation	A.5.2.3.2
DD	Delivery and Distribution	A.5.2.3.3

Source: https://assist.dla.mil -- Downloaded: 2016-12-05T17:12Z
Check the source to verify that this is the current version before use.

DP	Diagnostics and Prognostics	A.5.2.3.4
E	External Processes	A.5.2.3.5
G	Graphics	A.5.2.3.6
L	Linking	A.5.2.3.7
N	Navigation and Tracking	A.5.2.3.8
P	Printing	A.5.2.3.9
S	Special Content	A.5.2.3.10
U	Updates	A.5.2.3.10.9
Uo	User Operation Mode	A.5.2.3.12

A.5.2.2.3 Functionality. Identifies the functionality title.

A.5.2.2.4 Reqmt. For the type of functionality indicate in this column the content desired by entering an “R” for “REQUIRED” content, “NR” for content that is “NOT REQUIRED”, or “O” for optional content that may be required by the Government, but can not be determined at the time of the contract. All blocks for the selected functionality shall be completed with an “R”, “NR”, or an “O” for IETM acquisition. The blocks that already contain an "R" are required and shall not be changed.

A.5.2.2.5 Paragraph reference. Supplies the paragraph reference to the functionality description.

Source: https://assist.dla.mil -- Downloaded: 2016-12-05T17:12Z
Check the source to verify that this is the current version before use.

This page intentionally left blank.

Source: https://assist.dla.mil -- Downloaded: 2016-12-05T17:12Z
Check the source to verify that this is the current version before use.

TABLE A-XVII. Functionality Matrix.

Complexity Factor					
Linear	**Non-Linear**	**Category**	**Functionality**	**Reqmt**	**Paragraph Reference**
1	1	Ac	Suspend and Restart		A.5.2.3.1.1
3	3	Ac	Login		A.5.2.3.1.2
2	2	An	Global Data Annotation		A.5.2.3.2.1
2	2	An	Local Data Annotation		A.5.2.3.2.2
1	1	An	Personal Annotation		A.5.2.3.2.3
3	3	An	Redlining Graphics		A.5.2.3.2.4
2	2	An	Redlining Text		A.5.2.3.2.5
1	1	DD	CD-ROM		A.5.2.3.3.1
1	1	DD	DVD		A.5.2.3.3.2
2	2	DD	Network Distribution		A.5.2.3.3.3
1	1	DP	Diagnostics - User Determined Entry to IETM		A.5.2.3.4.1
2	2	DP	Diagnostics - Software Driven Entry to IETM		A.5.2.3.4.2
NA	5	DP	Dynamic Diagnostics		A.5.2.3.4.3
NA	5	DP	Prognostics		A.5.2.3.4.4
4	4	DP	System Simulation		A.5.2.3.4.5
4	4	DP	Wire/Fluid System Tracing		A.5.2.3.4.6
3	3	E	Deficiency Report	R	A.5.2.3.5.1
NA	5	E	Knowledge Management		A.5.2.3.5.2
3	3	E	Maintenance Data Collection		A.5.2.3.5.3
3	3	E	Operator Debriefing		A.5.2.3.5.4
3	3	E	Parts Ordering	R	A.5.2.3.5.5
3	3	E	Resource Scheduling		A.5.2.3.5.6
2	2	E	Supporting Technical Data		A.5.2.3.5.7
4	4	G	3D Modeling		A.5.2.3.6.1
2	2	G	Assembly/Disassembly		A.5.2.3.6.2
1	1	G	Locator Graphics		A.5.2.3.6.3
1	1	G	Pan, Zoom, Expand, Magnify		A.5.2.3.6.4
2	2	L	Hot Reference		A.5.2.3.7.1
3	3	L	Hotspotting		A.5.2.3.7.2
1	1	L	Internal References		A.5.2.3.7.3
2	2	L	Link To Separate Parts Data		A.5.2.3.7.4
1	1	L	Table of Contents	R	A.5.2.3.7.5
2	2	N	Audit Trail		A.5.2.3.8.1
3	3	N	Dialog-driven interaction		A.5.2.3.8.2
1	1	N	Exit	R	A.5.2.3.8.3
2	1	N	Filter by Configuration		A.5.2.3.8.4
2	1	N	Filter by Model Series		A.5.2.3.8.5
2	1	N	Filter by Modification		A.5.2.3.8.6

Source: https://assist.dla.mil -- Downloaded: 2016-12-05T17:12Z
Check the source to verify that this is the current version before use.

TABLE A-XVII. Functionality Matrix.

Complexity Factor					
Linear	**Non-Linear**	**Category**	**Functionality**	**Reqmt**	**Paragraph Reference**
2	1	N	Filter by Skill/Maintenance Level		A.5.2.3.8.7
2	1	N	Filter by Unique Identification Code		A.5.2.3.8.8
2	2	N	Graphical Navigation		A.5.2.3.8.9
1	1	N	History of Traversed Links	R	A.5.2.3.8.10
1	1	N	Next and Previous	R	A.5.2.3.8.11
1	1	N	Forward and Back		A.5.2.3.8.12
2	2	N	Search - Context		A.5.2.3.8.13
1	1	N	Search - Full Text	R	A.5.2.3.8.13.2
1	1	N	Search - User Defined Boolean		A.5.2.3.8.13.3
4	3	N	Search - Across Multiple Databases/Files		A.5.2.3.8.13.4
2	2	N	Search - Key Word		A.5.2.3.8.13.5
2	2	N	Simultaneous display of multiple content elements		A.5.2.3.8.14
1	1	N	System/Subsystem Navigation		A.5.2.3.8.15
2	2	N	Tear off Window Capability		A.5.2.3.8.16
1	1	N	User Creation of Bookmarks		A.5.2.3.8.17
3	3	N	Voice-Activated Commands		A.5.2.3.8.18
1	2	P	Work Package Specific Printing		A.5.2.3.9.1
4	5	P	Fully Formatted/Book Version		A.5.2.3.9.2
2	2	P	Print Linked Data		A.5.2.3.9.3
1	1	P	Print Screen	R	A.5.2.3.9.4
1	1	P	Print Frame		A.5.2.3.9.5
1	1	S	Alerts		A.5.2.3.10.1
4	4	S	Animation		A.5.2.3.10.2
2	2	S	Audio		A.5.2.3.10.3
1	1	S	Content Sensitive Help (Technical Data Help)	R	A.5.2.3.10.4
2	2	S	Context Sensitive Help (Viewer Help)	R	A.5.2.3.10.4.2
3	3	S	Motion Video		A.5.2.3.10.5
1	1	S	Digital Photos		A.5.2.3.10.6
3	3	S	User Training		A.5.2.3.10.7
1	2	S	Browsing		A.5.2.3.10.8
1	1	S	Selectable Text		A.5.2.3.10.9
2	3	S	Selectable Graphics		A.5.2.3.10.10
		S	Guide Post *NOTE* *When specified by the acquiring activity, the following guide post requirements are required.*		A.5.2.3.10.11
1	*2*	*S*	*Reset User Interface To Standard Default*	*R*	
1	*2*	*S*	*Minimize IETM*		

Source: https://assist.dla.mil -- Downloaded: 2016-12-05T17:12Z
Check the source to verify that this is the current version before use.

TABLE A-XVII. Functionality Matrix.

Complexity Factor					
Linear	**Non-Linear**	**Category**	**Functionality**	**Reqmt**	**Paragraph Reference**
1	*1*	*S*	*Print Frame*		
4	*5*	*S*	*Change To Page View*		
1	*3*	*S*	*Open New IETM*		
1	*1*	*S*	*Suspend*		
1	*1*	*S*	*Restart*		
2	*2*	*S*	*View Revision Summary*	*R*	
1	*1*	*S*	*Back*		
1	*1*	*S*	*Forward*		
1	*2*	*S*	*Abort Browse Mode*		
2	*2*	*S*	*Toggle Screen Panels/Bars On and Off*		
2	*2*	*S*	*Drill Up/Drill Down*	*R*	
1	*1*	*S*	*Other Custom Functions*		
1	*1*	*S*	*Exit Guide Post*	*R*	
2	2	U	Active Change Indications and markings	R	A.5.2.3.11.1
2	2	U	Block Cycle with /Urgent Changes		A.5.2.3.11.2
1	1	U	Full Revision		A.5.2.3.11.3
2	2	U	Near Real Time Updates		A.5.2.3.11.4
2	2	Uo	Network Connectivity		A.5.2.3.12.1
2	2	Uo	Network Connectivity - Context Filtering		A.5.2.3.12.1.1
2	2	Uo	Network Connectivity - Update Capability (Full Revision)		A.5.2.3.12.1.2
4	4	Uo	Network Connectivity - Update Capability (Partial)		A.5.2.3.12.1.3
1	1	Uo	Stand Alone Mode		A.5.2.3.12.2
3	3	Uo	Stand Alone Mode -Context Filtering		A.5.2.3.12.2.1
1	1	Uo	Stand Alone Mode - Update Capability (Full Revision)		A.5.2.3.12.2.2
4	4	Uo	Stand Alone Mode - Update Capability (Partial)		A.5.2.3.12.2.3
2	3	Uo	Web Browser Viewable		A.5.2.3.12.3

Legend
R Required
P Prohibited
O Optional

Source: https://assist.dla.mil -- Downloaded: 2016-12-05T17:12Z
Check the source to verify that this is the current version before use.

APPENDIX A

REMARKS **FOR MATRIX**

Source: https://assist.dla.mil -- Downloaded: 2016-12-05T17:12Z
Check the source to verify that this is the current version before use.

A.5.2.3 Functionality definitions. The following definitions provide descriptions of each of the functionalities identified in the matrix as well as some considerations to be made and the range of capabilities that may be addressed therein.

A.5.2.3.1 Access (Ac) category. Access is the functionality that allows or restricts users to view specific IETM data.

A.5.2.3.1.1 Suspend and restart. The capability to suspend an IETM maintenance session at a point and then provide the maintainer with the ability to restart at the point of suspense. Prerequisite is "Audit trail" paragraph A.5.2.3.8.1. This capability extends beyond a user session and retains local data. For example, during the performance of a maintenance session, a part is removed. The replacement part is not available in supply. The session is suspended and subsequently restarted after the part becomes available. At the time of restart, the user shall be advised that some key parameters/condition settings may be out-of-date. The system shall support three exit modes.

a. Complete (save and update history)
b. Abort (do not save or update history) (Browse mode only)
c. Suspend (save current session state and do not update history)

A.5.2.3.1.2 Login. The login shall be used to identify key information by the user and/or weapon system. A password for log on may be required.

A.5.2.3.2 Annotation (An) category. This functionality adds an electronic note to comment or provide additional explanation of the technical data. If the annotation functionality is included in the IETM, the proponent should have procedures in place to manage the configuration of the IETM..

A.5.2.3.2.1 Global data annotation. Global data annotation shall allow local maintenance activities to supplement the general quality assurance checks unique to that activity. This shall be limited in scope and shall be required to be approved by the end user's Quality Assurance process and be made available to the IETM development contractor. Globally accessible documentation is a one-way feature, which can only be added and may not be deleted. Prerequisite is "User Operation Mode - Update" paragraphs A.5.2.3.12.1.2, A.5.2.3.12.1.3, A.5.2.3.12.2.2, A.5.2.3.12.2.3, and A.5.2.3.8.1. Some examples are:

a. Globally accessible annotation is a quality maintenance supplement indicating the new type of lubricant to use.
b. Provide updates to data by quickly revising the CDROM to contain the "sticky" notes.
c. The DA Form 2028 is a discrepancy form that after approval may use Global Data Annotations to incorporate the data.

A.5.2.3.2.2 Local data annotation. This functionality shall allow the storage of locally applicable data. These annotations shall be limited in scope and require approval by the local approval process. This feature allows local maintenance activities to supplement the IETMs. Local accessible documentation is a one-way feature, which can only be added and may not be deleted. Prerequisite is "User Operation Mode - Update" paragraphs A.5.2.3.12.1.2, A.5.2.3.12.1.3, A.5.2.3.12.2.2, A.5.2.3.12.2.3, and A.5.2.3.8.1. An example of local data annotation: "The maintainer may be required to use additional filtering in a desert environment."

Source: https://assist.dla.mil -- Downloaded: 2016-12-05T17:12Z
Check the source to verify that this is the current version before use.

A.5.2.3.2.3 Personal annotation. Personal annotation shall be added or deleted at the end user's discretion and shall not be retained at the end of the maintenance session. It is not the intent that the personal annotation persists with the IETM. An example of a personal annotation: "Noticed that radome latch broken on left side notify radar shop."

A.5.2.3.2.4 Redlining graphics. Shall provide the capability to annotate graphics through the use of an overlay freehand-type drawing facility as shown in FIGURE A-16. The capability exists to save redline markups and any associated attributes. This functionality can be used during a review process.

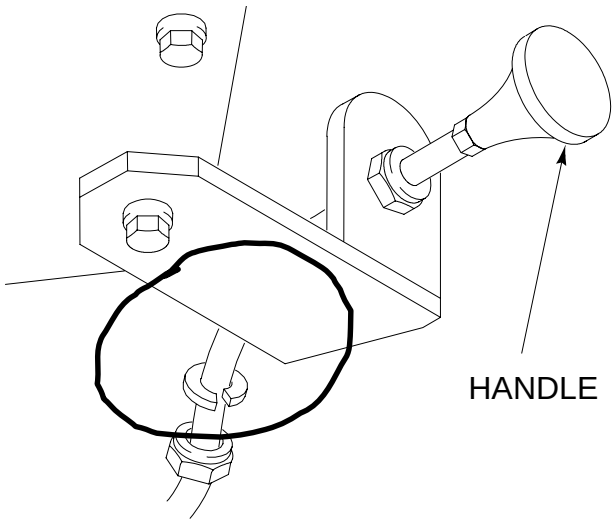

FIGURE A-16. Example of redlining a graphic.

A.5.2.3.2.5 Redlining text. Shall provide capability only during the review process to annotate text using markings for deletions and insertions. The comment annotation shall be used in conjunction with the redlining to denote reason for change

A.5.2.3.3 Delivery and distribution (DD) category. Identify the media to delivery from the contractor to the government and/or distributed to the soldier. Selection of the desired IETM media will drive costs; however, the most significant consideration is the readiness of the infrastructure at the user level for whatever media is acquired.

A.5.2.3.3.1 CD-ROM. Distribution and/or delivery shall be accomplished by Compact Disk – Read Only Memory (CD-ROM). Such physical distribution methods typically entail issue of a complete database thus replacing the data in use. This replacement constitutes a block change update and is performed on a periodic basis. Requires a CD-ROM compatible drive.

A.5.2.3.3.2 DVD. Distribution and/or delivery shall be accomplished by Digital Video Disc (DVD). DVD provides many of the same features of distribution and/or delivery by CD-ROM , but with greater capacity. Requires a DVD compatible drive. (See paragraph A.5.2.3.3.1 "CD-ROM").

Source: https://assist.dla.mil -- Downloaded: 2016-12-05T17:12Z
Check the source to verify that this is the current version before use.

A.5.2.3.3.3 Network distribution. Distribution by Internet (connections to the World-Wide-Web (WWW)) or Intranet (internal to one network) shall consist of direct transfer from one computing system to another. Distribution may be via secure FTP, HTTP, or other secure transfer protocols. Bandwidth, security, and operational deployment considerations shall be addressed. This may enable "Near Real Time Updates" (See paragraph A.5.2.3.11.4). Prerequisite is "Network connectivity" paragraph A.5.2.3.12.1.

A.5.2.3.4 Diagnostics and prognostics (DP) category. Diagnostics span from basic standalone troubleshooting procedures to integration with the weapon system and other maintenance systems. Prognostics may include health monitoring and linkage to autonomic logistics systems. IETM diagnostics and prognostics can be a significant benefit in reducing maintenance times and total ownership costs; however, they can also be a sizable cost driver in IETM development.

A.5.2.3.4.1 Diagnostics - User determined entry to IETM. Tasking for troubleshooting procedures shall be primarily textual references. 'If statements' (if a light is on as an example) provide alternatives in a narrative form. The user determines starting point for maintenance action, through the use of a predefined fault tree or index table.

A.5.2.3.4.2 Diagnostics - Software driven entry to IETM. The appropriate maintenance action starting point shall be software determined through use of an inference or logic engine. The user is provided with the appropriate starting point for fault isolation. Various inputs from personnel, system, and multiple fault codes are analyzed. The analysis shall determine if there is a relationship between the fault code(s) and information, then task appropriate actions as a result. Prerequisite is "Dialog-driven interaction" paragraph A.5.2.3.8.2.

A.5.2.3.4.3 Dynamic diagnostics. Diagnostic capabilities that shall use on-board monitoring devices (e.g. Built-in test (BIT)) and/or support/test equipment to provide enhanced capability for fault detection and isolation. Dynamic diagnostics direct fault isolation and troubleshooting shall be based on results returned from the weapon system rather than inputs received from the maintainer. With this type of diagnostics, there are no pre-defined paths in the troubleshooting data and the paths are generally model-based.

A.5.2.3.4.4 Prognostics. Prognostics shall predict the possible component degradation or impending failure, which will allow maintenance personnel to replace components based on their actual condition. The goal is autonomic logistics, which uses electronic information collected from the weapons system to determine, plan and perform needed maintenance with minimal downtime. Prerequisites are "Maintenance data collection" paragraph A.5.2.3.5.3 and "Network connectivity" paragraph A.5.2.3.12.1.

A.5.2.3.4.5 System simulation. This functionality shall include the capability to represent the behavior or characteristics of the system function/malfunction to determine or reenact the problem as shown in FIGURE A-17. Capabilities can include identifying continuity in wiring diagrams and circuit simulation, for passive and active circuits including activating switches applying power, etc. These capabilities can also be used to model hydraulic, fuel, pneumatic and other systems.

Source: https://assist.dla.mil -- Downloaded: 2016-12-05T17:12Z
Check the source to verify that this is the current version before use.

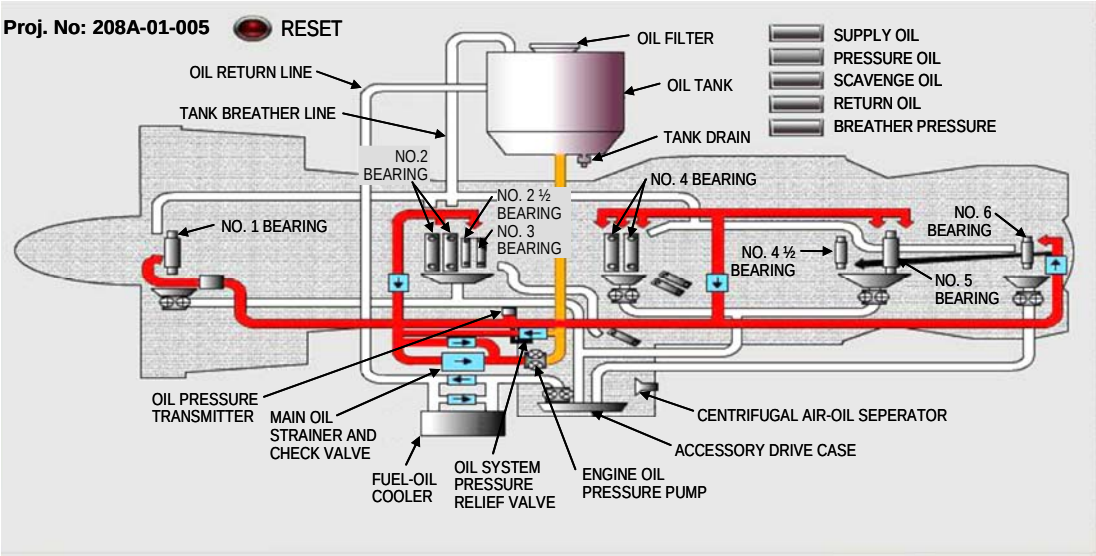

FIGURE A-17. Example of a system simulation.

A.5.2.3.4.6 Wire/Fluid system tracing. This functionality shall provide the capability to select a wire, fluid, pneumatic, or HVAC line, in a diagram or schematic and have continuity highlighted through the circuit or schematic as shown in FIGURE A-18.

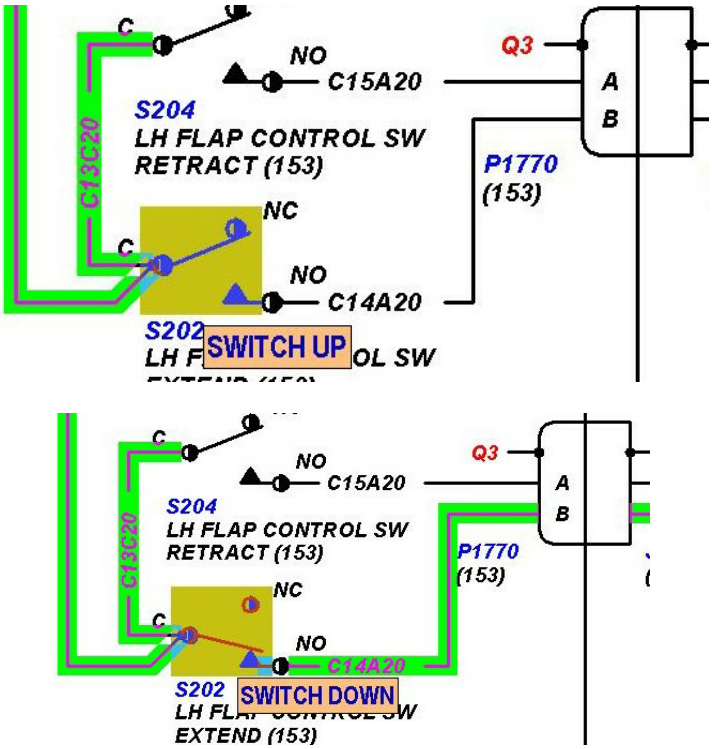

FIGURE A-18. Example of a wire/fluid system tracing.

Source: https://assist.dla.mil -- Downloaded: 2016-12-05T17:12Z
Check the source to verify that this is the current version before use.

A.5.2.3.5 External processes (E) category. The IETM environment has the potential to provide greater functionality by interacting with external processes, which are outside the technical data, to retrieve and transmit information.

A.5.2.3.5.1 Deficiency report (User feedback) (Required). Shall provide a method for users to capture and transmit errors and recommended changes from the IETM. Different complexity considerations include improvement reporting tracking, local base collection, and management of improvement reporting. The complexity of this will be determined by level of integration with the deficiency reporting system and the type of reporting structure:

a. Paper trail reporting
b. Electronic Reporting
c. LAN reporting
d. SATCOM reporting

A.5.2.3.5.2 Knowledge management. A knowledge management system shall model an organization's knowledge assets and environment to enhance its ability to deliver on its mission. It provides for information tracking, access, and synthesis in coordination with organizational culture, values and guidance. Both tacit and explicit intellectual capital may be leveraged through electronic integration of data, and human interaction (as in locating subject matter expertise and defining communities of practice.) This provides leadership with a rapid path to understanding discrete problems and changes from a strategic perspective. Possible benefits is technical maintenance data gathered through IETM audit logs, when integrated with real-time situational understanding, resource availability, the velocity of resource distribution, and subject matter expertise may suggest to command and control that a restructuring of the logistics footprint is needed to maximize lethality in a given arena. Prerequisites are “Maintenance data collection” paragraph A.5.2.3.5.3, “Parts ordering” paragraph A.5.2.3.5.5, “Login” paragraph A.5.2.3.1.2, and “Audit trail” paragraph A.5.2.3.8.1.

A.5.2.3.5.3 Maintenance data collection. This functionality shall capture and transmit configuration change data (i.e., removed and installed part number information), tasks authorized, tasks performed, results of that work (i.e., state table, audit trail), etc. This update shall feed an external data repository or maintenance application. Prerequisites are “Audit trail” paragraph A.5.2.3.8.1 and “Login” paragraph A.5.2.3.1.2.

A.5.2.3.5.4 Operator debriefing. This functionality shall include interface with operator and/or maintenance debriefing system for selecting task assignments. May also include development of maintenance actions based on operator and weapon system inputs.

A.5.2.3.5.5 Parts Ordering (Required). This functionality shall allow parts ordering capability that is linked with an integrated supply system. This functionality shall not circumvent the supply system protocol.

Source: https://assist.dla.mil -- Downloaded: 2016-12-05T17:12Z
Check the source to verify that this is the current version before use.

A.5.2.3.5.6 Resource Scheduling. This functionality shall have the capability for task planning, resource allocation, execution, monitoring and/or intervention coordinated among cooperating systems by multiple human or software agents (entities). These agents act intelligently against a set of constraints to minimize conflicts and optimally manage the goals of the system users. Automatic resource scheduling is characteristic of a complex autonomic logistics system. An example is an engine maintainer's planned maintenance activity may be modified from 'test and repair' to 'remove and replace' based on reliability data, mission availability requirements, and spares availability data from a ship within range.

A.5.2.3.5.7 Supporting technical data. Shall include links to general, part, and process manuals, commodity books, etc. May include links to commercial manuals where applicable. Further definition is required for determining if context sensitive linking is required or simply calling up an instance of the data source. System managers must also define if linked data sources are to be maintained locally, networked, or by linking though a network and internet/intranet. Specific viewers may be needed to view these manuals.

A.5.2.3.6 Graphics (G) category. Various levels of graphics display, interactivity, and navigation can be implemented through IETMs. The more complex graphical navigational techniques often come at a premium for both cost and system hardware/software requirements. Examples of these functionalities include:

a. Point and click on a locator graphic for the purpose of "drilling down" to graphic details
b. Links to textual or tabular information
c. Highlighting specific connections in a circuit
d. System simulation expressed graphically
e. Full 3D models that can be rotated with parts removed

A.5.2.3.6.1 3 D modeling. Modeling of the system using three dimensional, solid object graphical figures that shall be used to allow virtual assembly, disassembly, removal, and installation of parts of the weapon system using animation, simulation and/or virtual reality concepts. Levels of capability may include fly through (navigation through a three-dimensional model) type viewing. The degree of simulation, animation and virtual reality concepts can dramatically affect cost. Prerequisites are "Assembly/Disassembly" paragraph A.5.2.3.6.2 and "Animation" paragraph A.5.2.3.10.2.

A.5.2.3.6.2 Assembly/Disassembly. Graphical figure that shall allow virtual assembly, disassembly, removal, and installation of parts of the weapon system as shown in FIGURE A-19. These may be implemented through linked drawings or through manipulation of modeled vector graphics. Prerequisite is "Animation" paragraph A.5.2.3.10.2.

Source: https://assist.dla.mil -- Downloaded: 2016-12-05T17:12Z
Check the source to verify that this is the current version before use.

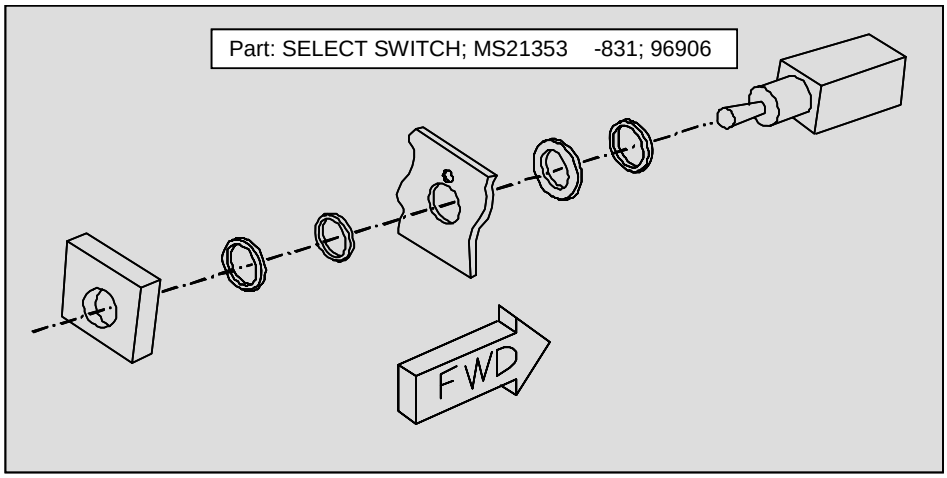

FIGURE A-19. Example of assembly/disassembly graphic.

A.5.2.3.6.3 Locator graphics. Locator graphics show where a component is located relative to other components as shown in FIGURE A-20 and FIGURE A-21.

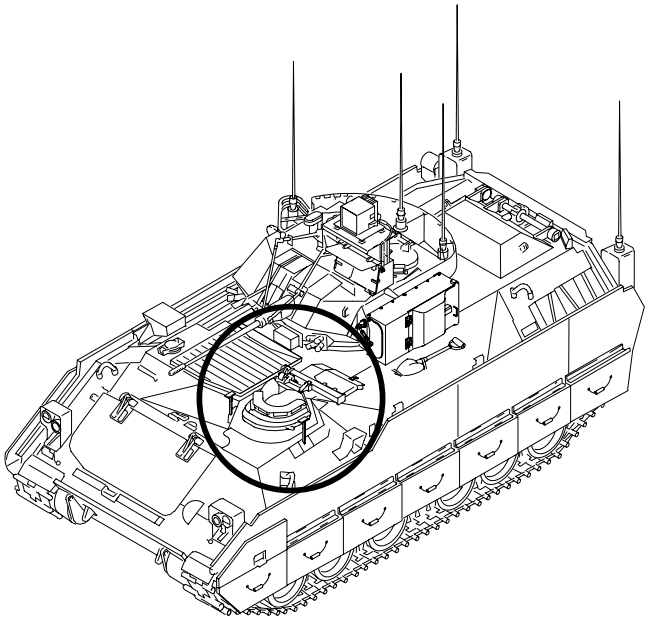

FIGURE A-20. Example of a locator graphic.

Source: https://assist.dla.mil -- Downloaded: 2016-12-05T17:12Z
Check the source to verify that this is the current version before use.

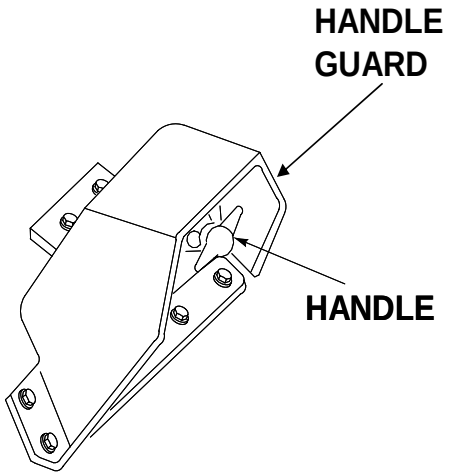

FIGURE A-21. Example of a locator component graphic.

A.5.2.3.6.4 Pan, zoom, expand, rotate, magnify. Graphical controls shall be provided to perform pan, zoom, expand, rotate and magnify on a graphic. Additional functionality may include spyglass view, text search, graphics and window resizing. Consideration should be given to the quality or limitations of the source data.

A.5.2.3.7 Linking (L) category. IETM basic linking functionality is defined as essentially link access or connections to the data within the IETM such as from the table of contents to the applicable IETM section. Additional linkage such as cross-references may require some additional effort to maintain. Linking to data items external to the IETM can also be acquired. These links may be to resources such as material handling information or for integration with other related information.

A.5.2.3.7.1 Hot reference. This functionality shall provide the capability to display additional content (i.e. acronym, tool tip, etc.). An example is a mouse over the word IETM would generate popup text box with “Interactive Electronic Technical Manual”.

A.5.2.3.7.2 Hotspotting. This functionality shall have the capability for links to be enabled within a graphic as shown in FIGURE A-22. Links may include reference to detail breakouts, next higher assemblies, part ordering information, parts breakdown data, and procedures from logic trees. These can be at various levels and include both raster and vector based graphics. The following are two hotspotting examples.

a. Links to related graphics. Links can be to breakdown illustrations showing greater detail, next higher assembly, or to locator art.
b. Links to related text. Can include links to procedural information from a logic or troubleshooting tree.

Source: https://assist.dla.mil -- Downloaded: 2016-12-05T17:12Z
Check the source to verify that this is the current version before use.

REMOVE GUNMOUNT SUPPORT/TRACK (A)ME

1. **Remove Skate Mount Rack (Figure 1, Item 4) from Gun Mount Support (Figure 1, Item 5).**

   a. Remove screw (Figure 1, Item 2) and remaining stop (Figure 1, Item 1) from gun mount support (Figure 1, Item 5) and track (Figure 1, Item 4).

   b. Remove six screws (Figure 1, Item 3) and track (Figure 1, Item 4) from gun mount support (Figure 5, Item 1).

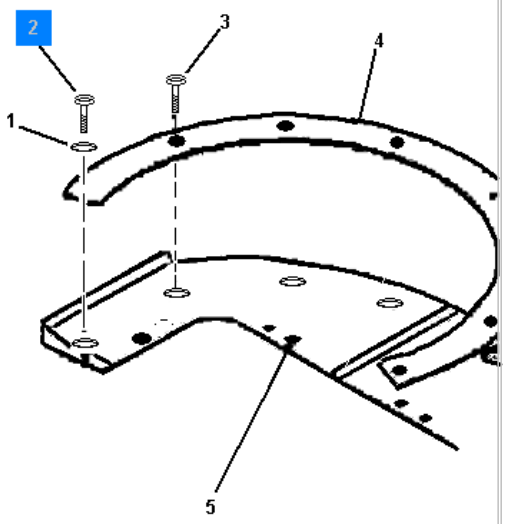

Figure 1. Gun Mount Support

FIGURE A-22. Example of hotspotting.

A.5.2.3.7.3 Internal References. Internal cross-references shall link to related data that may be accessed from one view in a presentation to another by the operator through navigating icons or links. Consideration must be given for bi-directional links. The bi-directional (go sub) returns, after completing action or procedure, to original referenced link.

A.5.2.3.7.4 Link to separate parts data. Linkage from a maintenance task or narrative shall be provided to a separate parts display in the current or separate window.

A.5.2.3.7.5 Table of contents (Required). A table of contents listing all work packages, figures, and tables shall be prepared for all IETMs. They shall have the exact same title as they appear in the IETM. Figures and tables shall be listed, in order as they appear, under the corresponding work package. A linear IETM shall list the work packages in the same order as they appear. A non-linear IETM shall include a list of systems/subsystems or functional groupings with their associated work packages. The TOC shall contain a link to the "How-to-Use" information and may also include links to other useful information such as authentication block, warning summary, feedback, etc.

a. The security classification, if any, of work packages, figures, and tables shall be indicated.

b. Figures in the table of contents shall be linked and listed under the corresponding work package by the figure number and title of each figure. When a IETM includes the parts information, the listing of parts information figures is optional.

Source: https://assist.dla.mil -- Downloaded: 2016-12-05T17:12Z
Check the source to verify that this is the current version before use.

c. Tables in the table of contents shall be listed under the corresponding work package by the table number and title of each table.

d. The following requirements are applicable to parts information entries.

(1) The parts information introduction work package **<introwp>** shall be the first work package listed in the parts information.

(2) Titles of parts information work packages, including the Functional Group Codes (FGCs) as applicable, shall be listed by the same nomenclature and in the same sequence in which they appear in the first tabular listing in the work package. The figure number may be included in the work package title.

(3) When multiple functional groups are under a single parts information work package, each functional group tabular list title may be included as a subordinate table of content entry.

(4) NSN, P/N and reference designator, when specified, the cross reference indexes shall be listed.

A.5.2.3.7.5.1 Authentication block **<authent>**. The authentication block, as provided by the acquiring activity, shall be accessed from the TOC. TM information for the authentication block frame may be linked.

A.5.2.3.7.5.2 Feedback. The user feedback shall be accessed from the TOC.

A.5.2.3.8 Navigation and tracking (N) category. IETMs exhibit a number of different navigation methods that enable linear and nonlinear access through the data. Features such as “forward” and “back”, search, and the use of bookmarks are considered to be relatively fundamental and consistent with most web-based data presentation techniques. Higher complexity navigation techniques include dialog driven interaction, voice activated commands and various filtering techniques. Examples of filtering characteristics are model number, identification number (e.g. Tail number or VIN), modification performed, and user qualifications. Tracking provides the ability to allow recording and subsequent retrieval of IETM activity, as in an audit trail. Levels of audit trails include a history of the current IETM session (browser history for data traversed), logging all actions performed for maintenance data collection, and integration with training and security systems.

A.5.2.3.8.1 Audit trail. This functionality shall capture all user and IETM interaction. Examples are shown in FIGURE A-23 and FIGURE A-24.

Source: https://assist.dla.mil -- Downloaded: 2016-12-05T17:12Z
Check the source to verify that this is the current version before use.

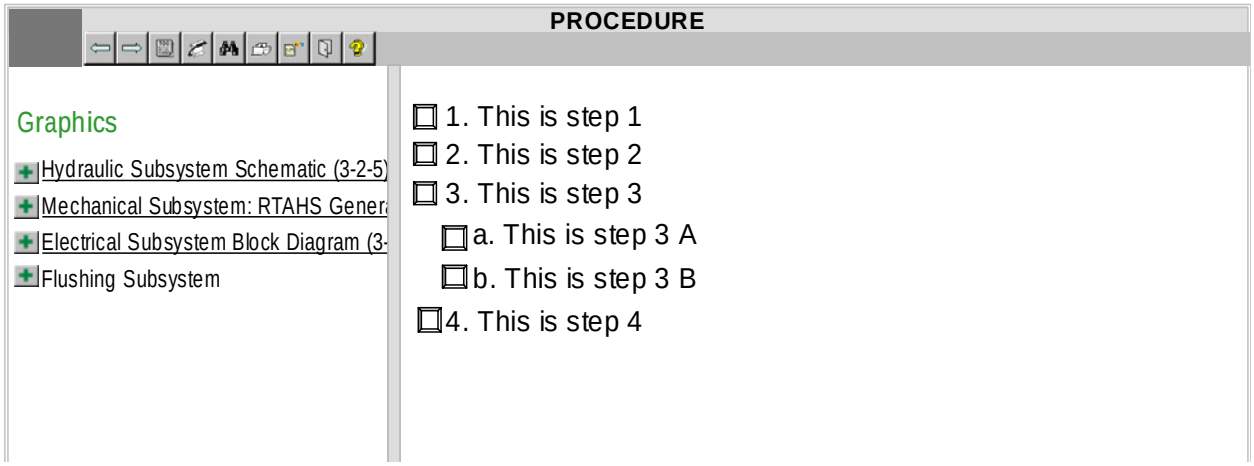

FIGURE A-23. Example of procedure checklist.

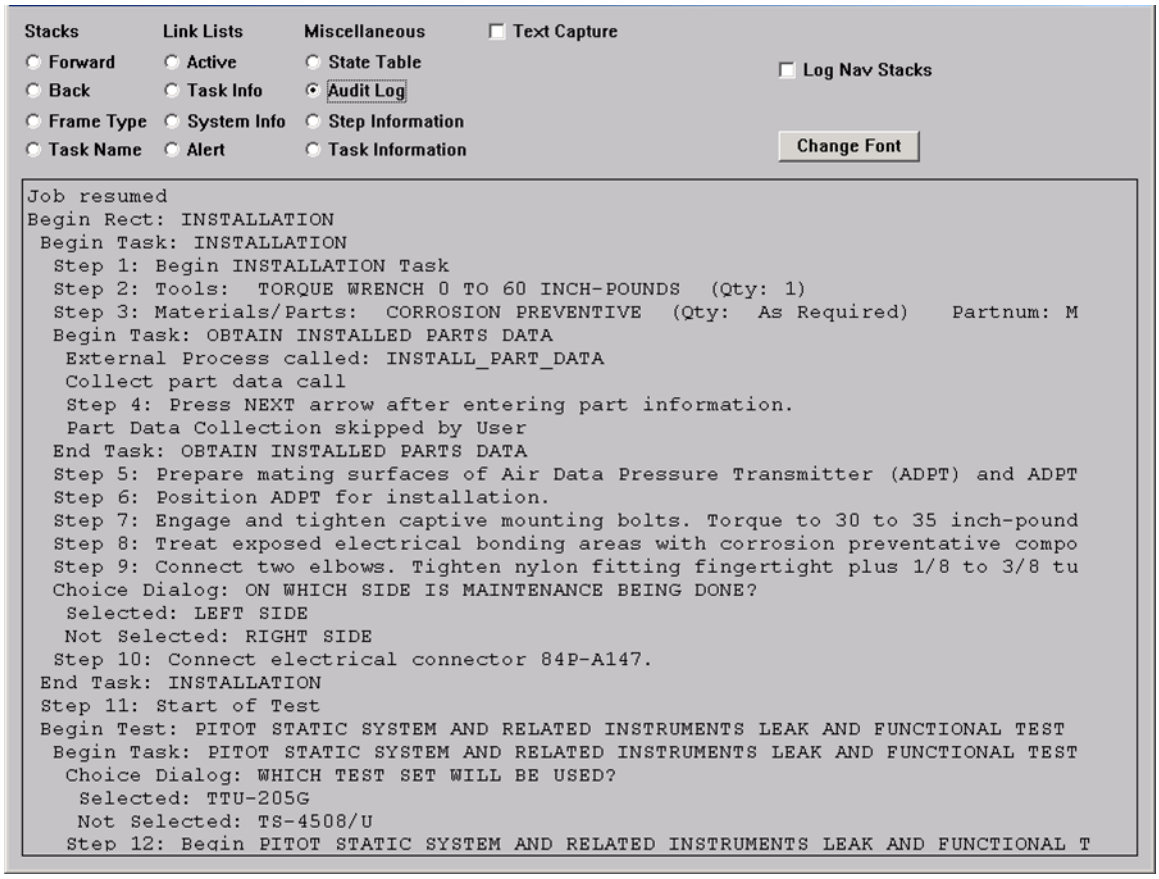

FIGURE A-24. Example of an administrative log.

Source: https://assist.dla.mil -- Downloaded: 2016-12-05T17:12Z
Check the source to verify that this is the current version before use.

A.5.2.3.8.2 Dialog-driven interaction. This functionality shall allow the user to directly feed information to the IETM environment. The IETM would cue the user to input specific data. The feature implies that at some point the IETM would then respond to the information entered. An example is: During a troubleshooting procedure, the IETM would open a dialog box that states "Enter the voltage reading at TP 5". If the user types in 5 (a nominal value), the IETM jumps to the next step in the procedure. On the other hand, if the user enters 0 (a fault level reading for a short) the IETM might jump to a remove and replace procedure.

A.5.2.3.8.3 Exit (Required). This function shall initiate the exit process that closes the IETM session. The user of the IETM shall always be asked for the confirmation that he or she wants to exit the IETM. If the IETM has session control capabilities such as suspend and restart or browse mode, then additional dialogs shall appear prompting the user of what course of action to take. For example, if suspend is used, the current state tables and position in the IETM is maintained, otherwise all information concerning state tables and position shall be cleared.

A.5.2.3.8.4 Filter by configuration. A feature that shall narrow the information presented to the user to that associated with a specific configuration of the end item. In many cases, a specific end item is changed from the baseline configuration to a different configuration. A user login may be the method used to enter the configuration that IETM would display.

A.5.2.3.8.5 Filter by model series. A feature that shall narrow the information presented to the user to that associated with a specific model series of the end item. Such filtering may be pre-defined or dynamic. A user login may be the method used to enter the model series that IETM would display. An example is an “A” model aircraft is a single seat configuration. A “B” model aircraft is a two-seat configuration. In this example, the canopy of each aircraft model is physically different. When a technician selects the “A” model for viewing, only the single seat configuration will be presented.

A.5.2.3.8.6 Filter by modification. A feature that shall narrow the information presented to the user to that associated with a specific modification rather than the end item being modified. A user would select specific modification tracking numbers and have the data unique to that modification presented. For example, MWO (Modification Work Order) 99-0013 upgraded the landing gear left support strut from part number 111500051354-001 to number 111500051354-003. Filtering by MWO number would present the appropriate part and maintenance data as show in FIGURE A-25.

Source: https://assist.dla.mil -- Downloaded: 2016-12-05T17:12Z
Check the source to verify that this is the current version before use.

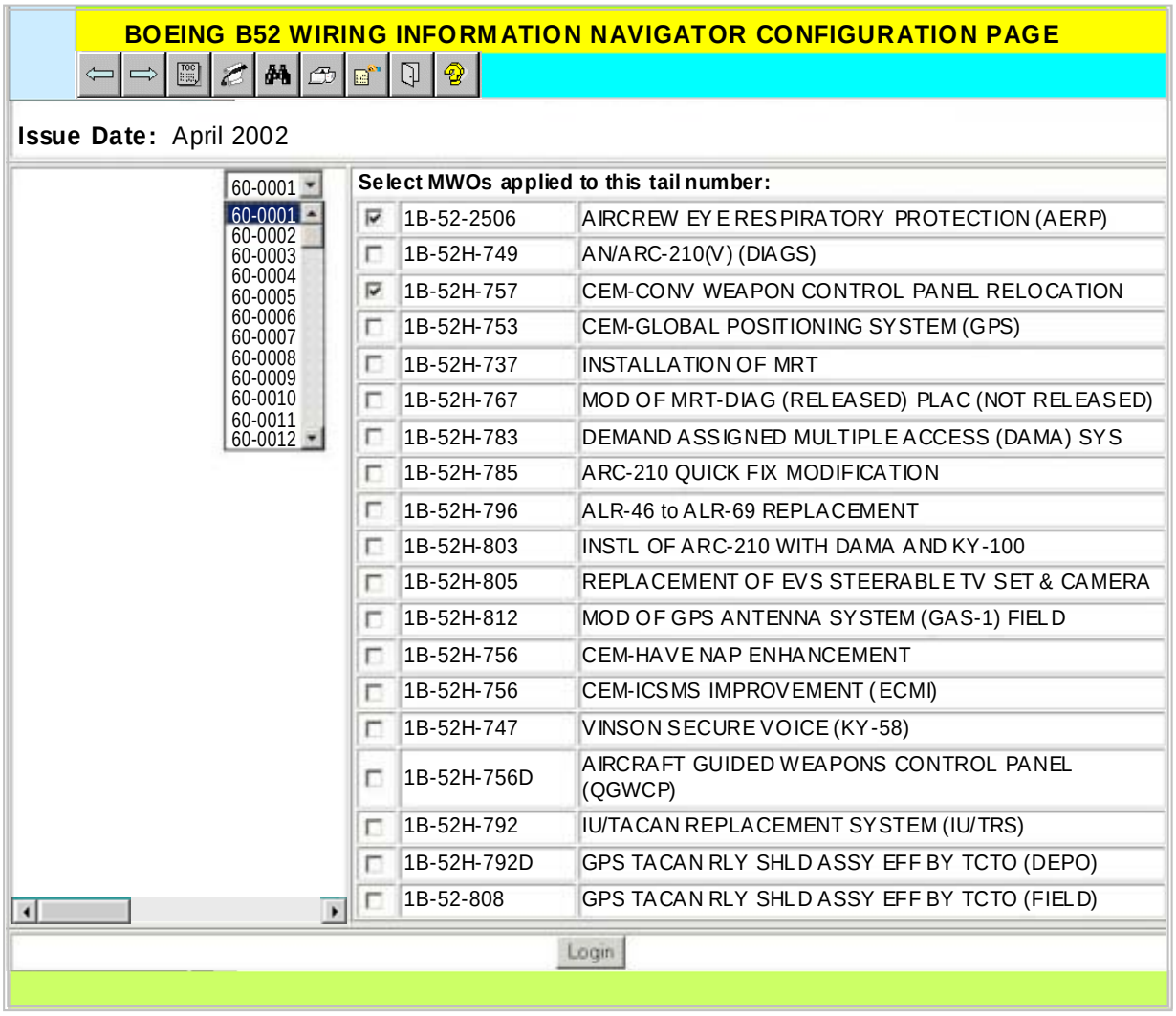

FIGURE A-25. Example of access by MWO.

A.5.2.3.8.7 Filter by Skill/Maintenance level. A feature that shall narrow the information presented to that user's specific user skill or maintenance level. A user login may be the method used to access the level of proficiency that IETM would display.

A.5.2.3.8.8 Filter by unique identification code. A feature that shall narrow the information presented to the user with a specific a unique identifier such as tail number, hull number or VIN. A user login may be the method used to enter the identification code that IETM would display.

A.5.2.3.8.9 Graphical navigation. This functionally shall provide the capability to navigate the IETM through graphical representation of the system and its components. Prerequisite is "Hotspotting" paragraph A.5.2.3.7.2. An example is: From a graphical overview of the aircraft system, the user selects a wing. A graphical overview of the wing is presented. The user then selects the flaps. A graphical overview of the flaps is presented. The user selects the actuator. Information on the actuator is presented.

Source: https://assist.dla.mil -- Downloaded: 2016-12-05T17:12Z
Check the source to verify that this is the current version before use.

A.5.2.3.8.10 History of traversed links (Required). A navigational feature that shall track and list each location (link) a user sees along the navigational path through an IETM. Where allowable, the reader shall have the ability to bring the list up and use each location (link), in the history list, as a link back to a point in the path. This feature is useful when flipping back and forth between several data types or components of the unit under maintenance. Example - The user opens the IETM to the Front Matter (A). Follows the link to the section on the landing gear (B). Follows a reference link to an adjustment procedure (C). The history of traversed links will be discretely listed as C, B, A.

A.5.2.3.8.11 Next and previous (Required). Next and previous are navigational functions that shall take the user through a procedure in a sequential manner. For example, a user performs steps 1 through 4 in order. The user is asked a branch question in step 4. The user answers the question and selects “next”. The branch question is evaluated and the results are such that user is taken directly to step 8. If the user selects “previous” at step 8, the user will go to step 7 and not to step 4 as would occur if the user selected “back” (see A.5.2.3.8.12 for a definition of “back”.)

A.5.2.3.8.12 Forward and back. Forward and back, shall have the same meaning as used in a “traditional” web browser. These functions shall permit re-navigation through previously viewed data. For example, a user performs steps 1 through 4 in order. In step 4, the user is asked a branch question. The user answers the question and selects “next” (see A.5.2.3.8.11 for a definition of “next”.) The branch question is evaluated and the results are such that user is taken directly to step 8. If the user selects “back” at step 8, the user will return to step 4. If the user then selects “forward” the user will go from step 4 to step 8 without having to answer the branch question and have it re-evaluated.

A.5.2.3.8.13 Search. Search features are a follows:

A.5.2.3.8.13.1 Search - context. A feature that shall allow the user to search within an IETM or data sources within a particular context (e.g. parts, steps, tables). The data source shall contain predefined context sensitive elements. An example is shown in FIGURE A-26. The content search is of a maintenance task “Clean” in an IETM. The topic “clean” is selected and then the topic “Maintenance Task” in the context search window is chosen. “Search” button is then clicked on to start the search of the maintenance task “clean” in the IETM.

Source: https://assist.dla.mil -- Downloaded: 2016-12-05T17:12Z
Check the source to verify that this is the current version before use.

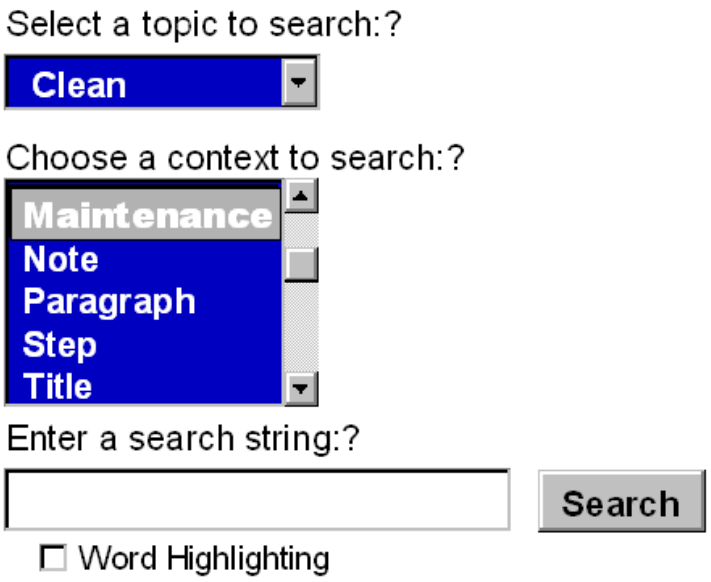

FIGURE A-26. Example of context search.

A.5.2.3.8.13.2 Search - Full text (Required). A navigational feature shall allow the user to search for any words or phrases within an IETM. This feature shall not depend upon the predefinition of key words. For example, in searching for “IFF” the user may find “IFF”, “difference”, “TIFF”, etc. depending on the search criteria.

A.5.2.3.8.13.3 Search - User defined boolean. A search feature that shall permit the logical association of terms to narrow the results of the search by scope (work package, IETM, database, etc.). Commonly supported logic include instances of both x and y appear (Logical AND), instances where neither x nor y appear (Logical NOR), and instances where only x or only y appear (Logical EXCLUSIVE OR).

A.5.2.3.8.13.4 Search - Across multiple databases/files. A search feature that shall allow the user to look for Key Words (assumes common key words across databases) or Full Text instances in several different data collections (i.e. Databases, IETMs).

A.5.2.3.8.13.5 Search - Key word. A search feature that shall allow the user to search an IETM for occurrences of a specific word. System specific "key words" are predefined with links to their location in the data. This provides benefits similar to an Index in a paper document. Associated advanced features might include (1) links to the portion of the IETM containing the word, (2) a “word wheel” that narrows the focus of search with each letter typed into a dialog box, and (3) searches across multiple data sources. An example is a user might search for the term "IFF". The Key Word Search would locate each pre-identified occurrence of the term in the data. This will find all occurrences of “IFF” that have been predefined as a key word, but not find all occurrences of the letters “IFF”.

A.5.2.3.8.14 Simultaneous display of multiple content elements. A relationship shall be establish between content elements (text, tables, graphics, etc.) allowing simultaneous display. The display of either element shall require the display of the other as shown in FIGURE A-27.

Source: https://assist.dla.mil -- Downloaded: 2016-12-05T17:12Z
Check the source to verify that this is the current version before use.

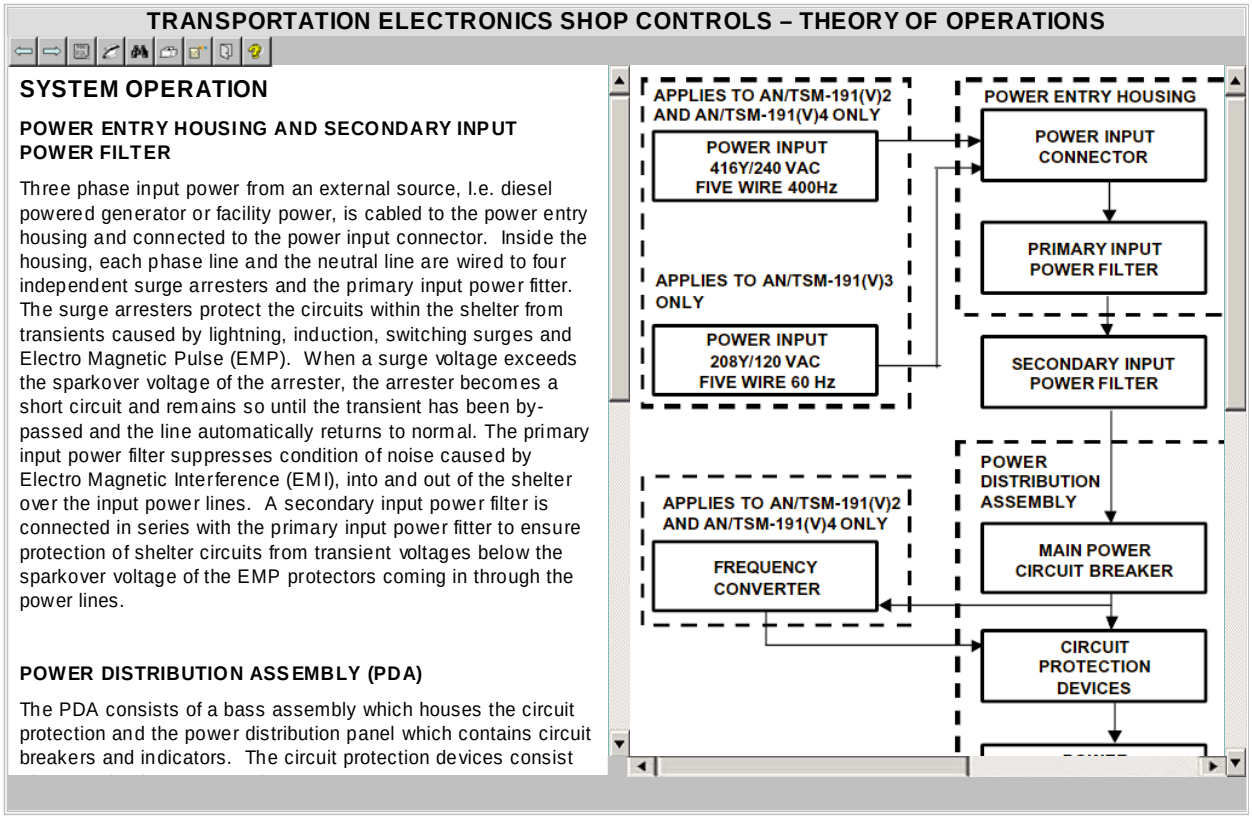

FIGURE A-27. Example of a simultaneous text and graph display.

A.5.2.3.8.15 System/Subsystem navigation. A navigational feature that shall allow the user to follow a top-down path through the breakdown structure of a system. The user follows a physical or functional breakdown to the next lower assembly and then to the next lower assembly from that. An example is a helicopter mechanic might begin the navigation of an IETM at the helicopter level. Next step would be to go down to the airframe. From the airframe, the mechanic might pick the cockpit. Next subsystem might be the Pilots Seat and the final topic might be the forward-rearward adjustment.

A.5.2.3.8.16 Tear off window capability. This function shall provide the capability (viewer navigation function) to capture an image of the existing pane/screen and then allow the user to navigate forward as shown in FIGURE A-28. This shall provide the capability to display the "torn off" image for reference without requiring navigation back to the pane/screen.

Source: https://assist.dla.mil -- Downloaded: 2016-12-05T17:12Z
Check the source to verify that this is the current version before use.

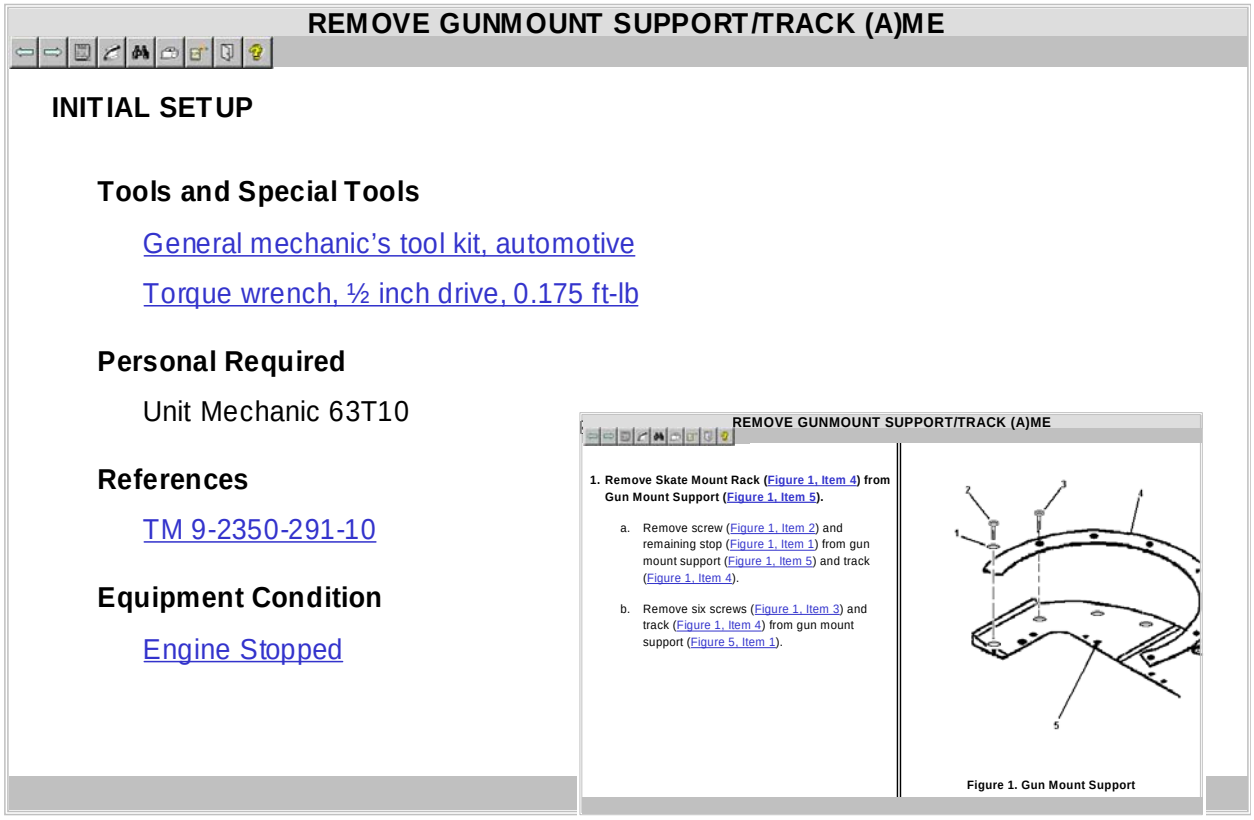

FIGURE A-28. Example of a tear off window.

A.5.2.3.8.17 User creation of bookmarks. A navigational feature that shall allow the user to flag certain locations for later access. It allows the user to build their own index of links to specific locations in the data. Associated advanced features include login specific bookmarks, so different people using the same presentation device have their own unique set of bookmarks. This is a digital means of implementing the dog-eared page, the paperclip used in manuals. Prerequisite is "Login" paragraph A.5.2.3.1.2. An example is the maintenance crewmember that generally does the preventative maintenance checks and services might have the bookmarks to those tasks. Since that crewmember might also do the rotor tension adjustment, he would also have a bookmark to that task.

A.5.2.3.8.18 Voice-Activated commands. A feature that shall enable the user to navigate through the IETM by pre-determined voice commands. The complexity of this feature depends upon the extent of voice tagging in the IETM and the quality of the voice recognition software.

A.5.2.3.9 Printing (P) category. Some IETMs by their nature are intended for use in an online environment, with print functionality limited primarily to task oriented and screen print output. By defining a hard copy output that more closely resembles a paper technical manual, the resulting costs and complexity rise.

A.5.2.3.9.1 Work package specific printing. This functionality shall provide the capability to print a discrete work package. Beyond the printed technical data, the following additional information shall be printed: Time/Date stamps, classified security marks, destruction notices, destruction dates and destruction requirements.

Source: https://assist.dla.mil -- Downloaded: 2016-12-05T17:12Z
Check the source to verify that this is the current version before use.

A.5.2.3.9.2 Fully formatted/book version. This capability shall provide a document printout or page-based viewer that conforms to MIL-STD-40051-2 format requirements. Beyond the printed technical data, the following additional information shall be printed: Time/Date stamps, classified security marks, destruction notices, destruction dates and destruction requirements. When the document exists as an IETM, in addition to the cost incurred, this may sub-optimize both the IETM and the printed Technical Manual.

A.5.2.3.9.3 Print linked data. This capability shall provide a printout of any linked data on a given task/location. This shall be limited to one level of linking. Traversing lower than one layer greatly increases the complexity. When printing a work package all the linked data within the work package shall also be printed. Beyond the printed technical data, the following additional information shall be printed: Time/Date stamps, persistent alerts, classified security marks, destruction notices, destruction dates and destruction requirements.

A.5.2.3.9.4 Print screen (Required). The print screen capability shall provide a print of only the screen currently being viewed by the maintainer. The information scrolled off the screen shall not be printed.

A.5.2.3.9.5 Print Frame. The print frame capability shall provide a print of the screen currently being viewed by the maintainer and the scrolled off information.

A.5.2.3.10 Special content (S) category. The inclusion of additional data types such as audio, motion video, and animations are accommodated relatively easily by most IETM systems; however, content generation is often more costly and performance issues may arise.

A.5.2.3.10.1 Alerts. These elements shall be readily identified and shall require specific operator acknowledgment prior to proceeding with the data being presented. Warnings and cautions shall be alerts. See paragraph 4.8.4.1 for alert requirements.

A.5.2.3.10.2 Animation. This functionality shall provide graphical components movement to represent actual function. Animation may be included to show a variety of system functions from theory of operation (hydraulic flow) to maintenance procedures (how to access a specific part). Animation shall not be the primary instruction to perform the task, but shall be a supplement to the narrative instruction.

A.5.2.3.10.3 Audio. This functionality shall provide sounds to assist in diagnostic or notify user of an action. Consideration shall be given to the anticipated environment to determine the usability of audio. Audio shall not be the primary instruction to perform the task, but shall be a supplement to the narrative instruction. Refer to MIL-HDBK-1222 for additional guidance on the use of the audio function.

A.5.2.3.10.4 Help. Brings up a list of the available help including, IETM specific browser help, standard browser help and help on how to use and navigate through the IETM.

A.5.2.3.10.4.1 Content sensitive help (technical data help)(Required). Help information shall be available to the user based on the data being presented or the tasks being performed through a common interface. This type of help pertains to the particular subject matter of the IETM, such as the specific weapon system.

Source: https://assist.dla.mil -- Downloaded: 2016-12-05T17:12Z
Check the source to verify that this is the current version before use.

A.5.2.3.10.4.2 Context sensitive help (viewer help)(Required). Help information shall be available to the user for the IETM operation including the features and functions of the IETM viewer. In many systems, right-clicking via the mouse or hovering the cursor over a particular graphic or menu item will cause a 'Tool tip' to pop up, providing help or a description for the specified feature as shown in FIGURE A-29.

FIGURE A-29. Example of a tool tip.

A.5.2.3.10.5 Motion video. This functionality shall provide video clips to assist in the maintenance action. Motion video may be used to show a unique procedure. Motion video shall not be the primary instruction to perform the task, but shall be a supplement to the narrative instruction.

A.5.2.3.10.6 Digital photos. Digital photos shall be included to show a specific visual representation of actual systems. Photos shall not be the primary instruction to perform the task, but shall be a supplement to the narrative instruction. Refer to 4.8.26.2.3 for "Digital Photos".

A.5.2.3.10.7 User training. User training shall include the integrating or linking maintenance and/or operational training on the use of the weapon system with the IETM. Access of the data may be through a link to an external module or integrated with the IETM can affect complexity of this functionality. Advanced capabilities may be to monitor usage and training access for the purpose of tracking user competency. Specific training courseware and/or actions are not necessarily part of the data. User training complexity can range from on-line access during IETM run time by linking to an embedded Computer Base Training (CBT) database to running a complete training lesson.

A.5.2.3.10.8 Browsing. Browsing is the ability to preview an IETM session prior to performing the work or task. The NEXT and PREVIOUS functions provide this capability for systems that do not set interactive system variables that are used to effect subsequent navigation through the IETM. The BROWSE PREVIOUS and BROWSE NEXT functions may be specified by the acquiring activity for highly interactive IETMs that do set such variables. These navigation functions shall act as NEXT and PREVIOUS, but shall not set or reset system variables automatically or through dialogs. Once either BROWSE PREVIOUS or BROWSE NEXT is selected, other navigation functions shall not be available until the user returns to the originating window by invoking the BROWSE EXIT function. When either the BROWSE PREVIOUS or the BROWSE NEXT function is not logical (such as at the beginning of a string or at a mandatory branch point), only the complementary BROWSE function shall be active. Browse system variables shall be set, activated, and logged to a temporary state table and shall not be posted permanently in the state table. The following browse capability shall be available.

a. User controlled access mode
b. No tracking of activities
c. Not rigidly tied to IETM controls

Source: https://assist.dla.mil -- Downloaded: 2016-12-05T17:12Z
Check the source to verify that this is the current version before use.

A.5.2.3.10.9 Selectable Text. This functionality shall provide the capability to highlight and select text for the purpose of copy and paste. Copied text could be pasted into dialog box data entry fields, editable forms, editable reports, etc. All selectable areas should be displayed and visually highlighted before selection.

A.5.2.3.10.10 Selectable Graphics. This functionality shall provide the capability to highlight and select graphics for the purpose of copy and paste. Copied graphics could be pasted into editable forms, editable reports, etc. All selectable areas should be displayed and visually highlighted before selection. The user should be given the capability to select a point, area, or the entire graphic by positioning the cursor on or near that point and activating the SELECT function. Selectable regions of a graphic should be visually distinct and should not adversely affect the appearance of the graphic. The selection of graphical information should include, but is not limited to, the following:

a. Selecting an individual graphic object, such as a part, displayed in a graphic.
b. Selecting a point or rectangular area in a graphic image.

A.5.2.3.10.11 Guide post. The guide post allows the user to get to and initiate special advanced functions or to return the user to the standard default. Many of these functions apply to higher-end IETMs. The following functions shall be accessed from the guide post. They are identified as being required or optional. However, since the guide post is optional, the required functions are only required when the guide post itself is selected by the acquiring activity. If the function is also listed elsewhere in the matrix, it's complexity factor is the same. See paragraph A.4.2.2 and figures A-1 and A-2 for further requirements/guidance for the guidepost.

a. Reset user interface to standard default (required). A user shall be able to reset the user interface back to the default, as defined upon normal start-up of the IETM for the first time
b. Minimize IETM (optional). This function shall cause the IETM to disappear from the screen and indicate an active application on the application tool bar for the operating system.
c. Print Frame (optional). Print the present screen including scrolled off information (A.5.2.3.9.5).
d. Change to page view (optional). Change to a paged view, usually PDF. This function is included in Fully formatted/book version (A.5.2.3.9.2)
e. Open new IETM (optional). Open another IETM in a separate window. Selection of this capability should take into consideration the adverse effects of screen stacking (A.4.5.6).
f. Suspend (optional). Pause and save current session state and do not update history. For those IETMs that can pause, save and restart sessions. This function is included in suspend/restart (A.5.2.3.1.1).
g. Restart (optional). Restart a saved session at the point of suspense. For those IETMs that can pause, save and restart sessions. This function is included in suspend/restart (A.5.2.3.1.1).
h. View revision summary (required). Allow user to view the revision summary. This is part of active change indications and marking (A.5.2.3.11.1).
i. Back (optional). Navigate back through the previously viewed information. This is part of Forward and Back (A.5.2.3.8.12)

Source: https://assist.dla.mil -- Downloaded: 2016-12-05T17:12Z
Check the source to verify that this is the current version before use.

j. Forward (optional). Navigate forward through the previously viewed information. This is part of Forward and Back (A.5.2.3.8.12)

k. Abort browse mode (optional). If browse mode is implemented, allows the user to exit from the browse mode. This is part of browsing (A.5.2.3.10.8)

l. Toggle screen panels/bars on and off (optional). Allows the user to toggle screen panels/bars on and off. This includes the guide post, TOC, classification bar, project specific bar and the status bar. A menu item shall be grayed out if it is not permitted to toggle that particular screen area off.

m. Drill up/drill down (required). The drill up/drill down function walks through the fully expanded TOC, which need not be displayed in the left hand TOC area. Drill up moves you back up the fully expanded TOC and drill down moves you down through the fully expanded TOC. Fully expandable TOC means all levels of the TOC can be displayed.

n. Other custom functions (optional). Any custom functions that the IETM provides shall be placed in the guide post. These shall be listed on the pop-up menu in addition to the mandatory and implemented optional items. This way the user knows how to get to them in a standard way. The complexity factor for this item only includes accessing a custom function from the guide post.

o. Exit Guide post (required). Exit the guide post and return back to where you left off prior to accessing the guide post.

A.5.2.3.11 Updates (U) category. These shall include change markings or other change indications. Updates include any technical data delivery after the initial delivery. IETMs support a number of different update methodologies that significantly affect the costs of sustainment and include Revisions, Changes and Urgent Changes (i.e. Rapid Action Changes (RACs)).

A.5.2.3.11.1 Active change indications and markings (Required). Each change shall be discretely marked or identified in the IETM. The IETM shall include a revision summary list. Considerations include method of display, identification of the change, and when they are removed or suppressed. Refer to MIL-HDBK-1222 for examples of multiview change indications and markings.

A.5.2.3.11.2 Block cycle with urgent changes. Block cycle update shall be the changes from all sources consolidated and issued at regularly scheduled intervals. Urgent changes shall be interim updates between scheduled block cycle updates.

A.5.2.3.11.3 Full revision. A full revision shall be a complete replacement of the data previously distributed. See paragraph 4.8.27 for “Revisions for IETMs”.

A.5.2.3.11.4 Near real time updates. Updates shall be available quickly and as either complete or partial updates to the user after authorized. This reduction in distribution time results in the maintainer having more up to date data. (See “Distribution – Network Distribution” paragraph A.5.2.3.3.3.)

A.5.2.3.12 User operation mode (Uo) category. User operation mode is the connectivity of the maintenance support device (MSD) or e-tool. Cost considerations are maintainability, storage, security, and context filtering of the IETM and technical data.

Source: https://assist.dla.mil -- Downloaded: 2016-12-05T17:12Z
Check the source to verify that this is the current version before use.

A.5.2.3.12.1 Network connectivity. The end user shall have access to the IETM via a network infrastructure. The data shall be downloaded to or viewed on the client device. Device may be disconnected and operated in a stand-alone mode. The data changes/revisions shall be installed on the host server and updates are transmitted via the network.

A.5.2.3.12.1.1 Network connectivity - context filtering. When connected to a network, the configuration of the weapon system shall be readily available to the e-tool via a maintenance management system. The configuration can then be "loaded" to the e-tool for IETM use.

A.5.2.3.12.1.2 Network connectivity - update capability (partial). This capability shall entail the update of the data via network distribution that contain only the changed information from the previously release. Downloading the data to the user's e-tool is done via the network.

A.5.2.3.12.1.3 Network connectivity mode - update capability (full revision). Data revisions shall be installed on the host server and updates shall be transmitted via the network. This is the least cost method of updates.

A.5.2.3.12.2 Stand alone mode. The end user shall access either the IETM via the hard drive or CD-ROM/DVD drive. Consideration should be taken for the update capabilities.

A.5.2.3.12.2.1 Stand alone mode - context filtering. When in Stand Alone Mode, the configuration of the weapon system may not be readily available on the e-tool. If connected to a maintenance management system, the configuration can be "loaded" to the e-tool prior to disconnection and IETM use. Without a configuration file, the user will be required to answer dialogs (questions) that normally would not be asked in a network connection mode.

A.5.2.3.12.2.2 Stand alone mode - update capability (full revision). This capability shall entail the update of the data via an entire CD-ROM/DVD distribution. This is done via reading the new distribution or downloading the data from the CD-ROM/DVD to the user's e-tool hard drive. This method provides the lowest cost impact.

A.5.2.3.12.2.3 Stand alone mode - update capability (partial). This capability shall entail the update of the data via CD-ROM/DVD distribution that contains only the changed information from the previous release. This is difficult to implement if the stand-alone mode is designed to view from the CD-ROM/DVD. Downloading the data from the CD-ROM/DVD to the user's e-tool hard drive is a viable approach but is still technically difficult to do.

A.5.2.3.12.3 Web browser viewable. This functionality shall allow the IETM to be viewed through a COTS web browser. Consideration will be required for a specific web browser. Different implementations include remote access to an IETM web server, opening static web pages locally, and web server emulation on the client viewer. The functionality selected in this matrix will determine the level of complexity and cost of implementing a web browser viewable application.

A.5.3 IETM tailoring requirements. Tailoring of the technical content requirements contained in Appendix B through Appendix GI is provided in TABLE A-XIX through TABLE A-XXII content matrix tables. The tables list all applicable technical content requirements for the development of the following IETMs. Copies of the applicable tables shall be completed and added as an attachment to the Document Summary List of the contract.

Source: https://assist.dla.mil -- Downloaded: 2016-12-05T17:12Z
Check the source to verify that this is the current version before use.

A.5.3.1 Publication Titles.

a. All IETM titles, except DMWR and NMWR, shall start with the words “Interactive Electronic Technical Manual” and shall follow by the titles given in TABLE A-XVIII.
b. If your RPSTL information, except DMWR and NMWR, contains Depot parts and special tools, the title shall indicate this (e.g., Field and Sustainment Maintenance Manual with Parts Information including Depot).
c. DMWR/NMWR shall start with the words “Interactive Electronic” followed by the titles in TABLE A-XVIII.

TABLE A-XVIII. Publication Type and Title with Associated Context Matrix Table.

PUBLICATION TYPE	TITLE	APPLICABLE TABLE
-10	Operator's Manual for *Insert System*	TABLE A-XIX
-13&P	Operator and Field Maintenance Manual for *Insert System* including Parts Information	TABLE A-XX
-14&P	Operator, Field, and Sustainment Maintenance Manual for *Insert System* including Parts Information	TABLE A-XX
-23&P	Field Maintenance Manual for *Insert System* including Parts Information	TABLE A-XXI
-24&P	Field and Sustainment Maintenance Manual for *Insert System* including Parts Information	TABLE A-XXI
-40&P	Sustainment Maintenance Manual for *Insert System* including Parts Information	
DMWR	Depot Maintenance Work Requirement	TABLE A-XXII
DMWR w/RPSTL	Depot Maintenance Work Requirement including Parts Information	TABLE A-XXII
DMWR Containing Overhaul Standards w/Parts Info	Depot Maintenance Work Requirement containing National Maintenance Repair Standards including Parts Information	TABLE A-XXII
NMWR	National Maintenance Work Requirement	TABLE A-XXII
NMWR w/Parts Info	National Maintenance Work Requirement including Parts Information	TABLE A-XXII

A.5.3.2 Technical content tables. TABLE A-XIX through TABLE A-XXII simplifies tailoring the technical content requirements of technical manuals prepared using this standard as a guide. The tables indicate which portions of this standard are applicable and list the content requirements for each type of IETM. Inclusion of the applicable tables of this appendix is mandatory and is intended for compliance.

Source: https://assist.dla.mil -- Downloaded: 2016-12-05T17:12Z
Check the source to verify that this is the current version before use.

A.5.3.3 Additional requirements.

A.5.3.3.1 CD-ROM. Unless otherwise directed by the acquiring activity, all maintenance instructions (operators through overhaul (depot)) for major weapon systems and all types of equipment, including test and support equipment, shall be on a single CD-ROM. This includes parts information, troubleshooting, PMS and PMI checklists when applicable. The following types of technical manuals should not be combined with the maintenance instructions on the single CD-ROM.

a. Aircraft Operators Manuals.
b. Certain types of Operator Manuals when directed by the acquiring activity.
c. Depot Maintenance Work Requirements (DMWRs)
d. National Maintenance Work Requirements (NMWRs)

A.5.3.3.2 Schematics and wiring diagrams. Due to the viewer limitations for displaying schematics and wiring diagrams provided in IETMs, the acquiring activity may require that the schematics and wiring diagrams be printed on paper in a double king size (11-inch by 17-inch) as a supplement to the IETM.

A.5.3.4 Intended use. First, determine the types of IETMs required for each acquisition and then duplicate the table(s) that contains the content requirements for those types of IETMs. Indicate the types of IETMs needed by filling in the blank after “IETM Requirements Matrix for” at the top of each matrix. For each type of IETM selected, indicate in the open blocks the “IETM” content desired by entering an “R” for “REQUIRED” content or a “P” for content that is “PROHIBITED”. All blocks for the selected IETM types in TABLE A-XIX through TABLE A-XXII must be completed with an “R” or a “P” for each IETM acquisition. The blocks that already contain an “R” are required and cannot be changed. The blocks containing “P” are prohibited for that type of IETM and shall not be included. The blocks that are shaded is content shall be required when needed to support the equipment. The blocks that are blank shall be filled in with “R”, “P”, or shading. Shading may be changed to “R” or “P”. The remarks page can be used to provide the contractor additional instructions such as indicating to the contractor any of the items in the matrix that will be provided by the proponent (done in house).

A.5.3.5 Acquisition requirements. The properly executed IETM functionality matrix and content selection matrix tables become contractually binding when made part of the contract, statement of work or any other contractual instrument.

Source: https://assist.dla.mil -- Downloaded: 2016-12-05T17:12Z
Check the source to verify that this is the current version before use.

TABLE A-XIX. IETM Requirement Matrix for_____.

IETM Content	-10	MIL-STD-40051-1 Reference	Element Name
INTRODUCTORY MATTER	R	5.2.1	<framed.frnt>
IETM Installation data	R	5.2.1.1	
CD content frame	R	5.2.1.2	
(MC) Promulgation letter		5.2.1.3	<promulgation>
Warning summary		5.2.1.4	<warnsum>
Revision summary frame	R	e	<revisionsummary>
Identification information	R	5.2.1.6	<frntcover>
Table of contents	R	5.2.1.7	<contents>
How to use this IETM	R	5.2.1.8	<howtouse>
GENERAL INFORMATION, EQUIPMENT DESCRIPTION AND THEORY OF OPERATION	R	B.5.1	<gim>
GENERAL INFORMATION WORK PACKAGE	R	B.5.2	<ginfowp>
Scope	R	B.5.2.3	<scope>
Maintenance forms, records, and reports	R	B.5.2.4	<mfrr>
Reporting equipment improvement recommendations (EIR)	R	B.5.2.5	<eir>
Hand receipt (HR) information		B.5.2.6	<handreceipt>
Corrosion prevention and control (CPC)	R	B.5.2.7	<cpcdata>
Ozone depleting substances (ODS)		B.5.2.8	<odsdata>
Destruction of Army materiel to prevent enemy use	R	B.5.2.9	<destructmat>
Preparation for storage or shipment	R	B.5.2.10	<pssref>
Warranty information		B.5.2.11	<wrntyref>
Nomenclature cross-reference list		B.5.2.12	<nomenreflist>
List of abbreviations/acronyms	R	B.5.2.13	<loa>
Safety, care, and handling		B.5.2.16	<sftyinfo>
Nuclear hardness		B.5.2.17	<hcp>
Calibration		B.5.2.18	<calref>
Copyright credit line		B.5.2.26	<copyrt>
EQUIPMENT DESCRIPTION AND DATA WORK PACKAGE	R	B.5.3	<descwp>
Equipment characteristics, capabilities, and features	R	B.5.3.3	<eqpinfo>
Location and description of major components (*Not required for Conventional and Chemical Ammunition IETMs*)	R	B.5.3.4	<locdesc>
Differences between models		B.5.3.5	<eqpdiff>
Equipment data	R	B.5.3.6	<eqpdata>
THEORY OF OPERATION WORK PACKAGE	R	B.5.4	<thrywp>
OPERATOR INSTRUCTIONS	R	C.5.1	<opim>
DESCRIPTION AND USE OF OPERATOR CONTROLS AND INDICATORS WORK PACKAGE	R	C.5.2.3	<ctrlindwp>
OPERATION UNDER USUAL CONDITIONS WORK PACKAGE	R	C.5.2.4	<opusualwp>

Source: https://assist.dla.mil -- Downloaded: 2016-12-05T17:12Z
Check the source to verify that this is the current version before use.

TABLE A-XIX. IETM Requirement Matrix for_____.

IETM Content	-10	MIL-STD-40051-1 Reference	Element Name
Security measures for electronic data		C.5.2.4.3	<secref>
Siting requirements		C.5.2.4.4	<site>
Shelter requirements		C.5.2.4.5	<shelter>
Assembly and preparation for use		C.5.2.4.6	<prepforuse>
Initial adjustments, before use and self-test		C.5.2.4.7	<initial>
Operating procedures	R	C.5.2.4.8	<oper>
Decals and instruction plates		C.5.2.4.8.2	<instructplt>
Operating auxiliary equipment		C.5.2.4.9	<operaux>
Preparation for movement		C.5.2.4.10	<prepmove>
OPERATION UNDER UNUSUAL CONDITIONS WORK PACKAGE	R	C.5.2.5	<opunuwp>
Security measures for electronic data		C.5.2.5.3	<secref>
Unusual environment / weather	R	C.5.2.5.3.2	<unusualenv>
Fording and swimming		C.5.2.5.3.3	<fording>
Interim nuclear, biological, and chemical (NBC) decontamination procedures		C.5.2.5.3.4	<decon>
Jamming and electronic countermeasures (ECM) procedures		C.5.2.5.3.5	<ecm>
Degraded operation procedures	R	C.5.2.5.3.6	<degraded>
EMERGENCY WORK PACKAGE		C.5.2.6	<emergencywp>
STOWAGE AND DECAL / DATA PLATE GUIDE WORK PACKAGE		C.5.2.7	<stowagewp>
ON-VEHICLE EQUIPMENT LOADING PLAN WORK PACKAGE		C.5.2.8	<eqploadwp>
TROUBLESHOOTING PROCEDURES ***NOTE*** *The notation (*) indicates that, if required, at least one of the these content items shall be included*		D.5.1	<tim>
TROUBLESHOOTING INDEX WORK PACKAGE		D.5.5.5	<tsindxwp>
**OPERATIONAL CHECKOUT WORK PACKAGE*		D.5.5.8.3	<opcheckwp>
**TROUBLESHOOTING PROCEDURES WORK PACKAGE*		D.5.5.8.4	<tswp>
**OPERATIONAL CHECKOUT AND TROUBLESHOOTING PROCEDURES WORK PACKAGE*		D.5.5.8.5	<opcheck-tswp>
**DIAGNOSTICS WORK PACKAGE*		D.5.6	<diagnosticswp>
MAINTENANCE INSTRUCTIONS	R	E.5.1	<mim>
PMCS INTRODUCTION WORK PACKAGE		E.5.3.4.1	<pmcsintrowp>
PMCS, INCLUDING LUBRICATION INSTRUCTIONS, WORK PACKAGE		E.5.3.4.2	<pmcswp>
MAINTENANCE WORK PACKAGES ***NOTE*** *As applicable, the following maintenance tasks shall be presented in the general order listed below:*	R	E.5.3.5	<maintwp>
Servicing		E.5.3.5.3.3	<service>

Source: https://assist.dla.mil -- Downloaded: 2016-12-05T17:12Z
Check the source to verify that this is the current version before use.

TABLE A-XIX. IETM Requirement Matrix for_____.

IETM Content	-10	MIL-STD-40051-1 Reference	Element Name
Ground handling		E.5.3.5.3.4	<groundtsk>
Inspection of installed items		E.5.3.5.3.5	<inspinstitm>
Removal		E.5.3.5.3.6	<remove>
Disassembly		E.5.3.5.3.7	<disassem>
Cleaning		E.5.3.5.3.8	<clean>
Inspection - acceptance and rejection criteria		E.5.3.5.3.9	<acptrejinsp>
Nondestructive testing inspection (NDTI)		E.5.3.5.3.10	<ndti>
Repair or replacement		E.5.3.5.3.11	<repair-rplc>
Alignment		E.5.3.5.3.12	<align>
Painting		E.5.3.5.3.13	<paint>
Lubrication		E.5.3.5.3.14	<lube>
Assembly		E.5.3.5.3.15	<assem>
Test and inspection		E.5.3.5.3.16	<test-inspect>
Installation		E.5.3.5.3.17	<install>
Adjustment		E.5.3.5.3.18	<adjust>
Calibration		E.5.3.5.3.19	<calibration>
Radio interference suppression		E.5.3.5.3.20	<ris>
Placing in service		E.5.3.5.3.21	<pis>
Testing		E.5.3.5.3.22	<test-pass>
Preparation for storage or shipment		E.5.3.5.3.25	<pss>
Classification of defects		E.5.3.5.3.26	<ammo.defect>
Handling ammunition		E.5.3.5.3.27	<ammo.handling>
Ammunition markings		E.5.3.5.3.28	<ammo.markings>
Procedures for ammunition activation		E.5.3.5.3.29	<arm>
Additional maintenance task		E.5.3.5.3.30	<other.maintsk>
Follow-on maintenance		E.5.3.5.3.31	<followon.maintsk>
GENERAL MAINTENANCE WORK PACKAGE		E.5.3.6	<maintwp>
LUBRICATION INSTRUCTIONS WORK PACKAGE		E.5.3.7	<lubewp>
AUXILIARY EQUIPMENT MAINTENANCE INSTRUCTIONS		E.5.1 E.5.2.6	<mim> <auxilarycategory>
AUXILIARY EQUIPMENT MAINTENANCE WORK PACKAGE		E.5.3.13	<auxeqpwp>
AMMUNITION MAINTENANCE INSTRUCTIONS		E.5.1 E.5.2.7	<mim> <ammunitioncategory>
AMMUNITION MAINTENANCE WORK PACKAGE		E.5.3.14.1	<ammowp>
AMMUNITION MARKING INFORMATION WORK PACKAGE		E. 5.3.14.2	<ammo.markingwp>
DESTRUCTION OF EQUIPMENT TO PREVENT ENEMY USE INFORMATION		Appendix H	<destruct-ginfowp> <destruct-materialwp>
GENERAL INFORMATION WORK PACKAGE		H.5.1	<destruct-ginfowp>

Source: https://assist.dla.mil -- Downloaded: 2016-12-05T17:12Z
Check the source to verify that this is the current version before use.

TABLE A-XIX. IETM Requirement Matrix for_____.

IETM Content	-10	MIL-STD-40051-1 Reference	Element Name
DESTRUCTION OF EQUIPMENT TO PREVENT ENEMY USE WORK PACKAGE		H.5.2	<destruct-ginfowp>
BATTLE DAMAGE ASSESSMENT AND REPAIR (BDAR) INFORMATION		APPENDIX I	
GENERAL INFORMATION WORK PACKAGE		I.5.2.1	<bdar-geninfowp>
BATTLE DAMAGE ASSESSMENT WORK PACKAGE(S)		I.5.2.2	<damage-assesswp>
REPAIR WORK PACKAGES		I.5.2.3	<genrepairwp>
SPECIAL/FABRICATED TOOLS WORK PACKAGE		I.5.2.5	<bdartoolswp>
SUBSTITUTE MATRIALS/PARTS WORK PACKAGE		I.5.2.7	<susbstitute-matwp>
SUPPORTING INFORMATION ***NOTE*** *Applicable supporting information work packages shall be arranged in the order in which they are presented here and numbered accordingly.*	R	G.5.1	<sim>
REFERENCES WORK PACKAGE	R	G.5.2	<refwp>
COMPONENTS OF END ITEM (COEI) AND BASIC ISSUE ITEMS (BII) LISTS WORK PACKAGE	R	G.5.4	<coeibiiwp>
ADDITIONAL AUTHORIZATION LIST (AAL) WORK PACKAGE		G.5.5	<aalwp>
EXPENDABLE AND DURABLE ITEMS LIST WORK PACKAGE	R	G.5.6	<explistwp>
CRITICAL SAFETY ITEMS AND FLIGHT SAFETY CRITICAL AIRCRAFT PARTS WORK PACKAGE		G.5.9	<csi.fscap.wp>
SUPPORT ITEMS WORK PACKAGE		G.5.10	<supitemwp>
ADDITIONAL SUPPORTING WORK PACKAGES		G.5.11	<genwp>

Legend
R Required
P Prohibited
Shaded As required

Source: https://assist.dla.mil -- Downloaded: 2016-12-05T17:12Z
Check the source to verify that this is the current version before use.

TABLE A-XX. IETM Requirement Matrix for _____.

IETM Content	-13&P	-14&P	MIL-STD-40051-1 Reference	Element Name
INTRODUCTORY MATTER	R	R	5.2.1	<framed.frnt>
IETM Installation data	R	R	5.2.1.1	
CD content frame	R	R	5.2.1.2	
(MC) Promulgation letter			5.2.1.3	<promulgation>
Warning summary			5.2.1.4	<warnsum>
Revision summary frame	R	R	e	<revisionsummary>
Identification information	R	R	5.2.1.6	<frntcover>
Table of contents	R	R	5.2.1.7	<contents>
How to use this IETM	R	R	5.2.1.8	<howtouse>
GENERAL INFORMATION, EQUIPMENT DESCRIPTION AND THEORY OF OPERATION	R	R	B.5.1	<gim>
GENERAL INFORMATION WORK PACKAGE	R	R	B.5.2	<ginfowp>
Scope	R	R	B.5.2.3	<scope>
Maintenance forms, records, and reports	R	R	B.5.2.4	<mfrr>
Reporting equipment improvement recommendations (EIR)	R	R	B.5.2.5	<eir>
Hand receipt (HR) information			B.5.2.6	<handreceipt>
Corrosion prevention and control (CPC)	R	R	B.5.2.7	<cpcdata>
Ozone depleting substances (ODS)			B.5.2.8	<odsdata>
Destruction of Army materiel to prevent enemy use	R	R	B.5.2.9	<destructmat>
Preparation for storage or shipment	R	R	B.5.2.10	<pssref>
Warranty information			B.5.2.11	<wrntyref>
Nomenclature cross-reference list			B.5.2.12	<nomenreflist>
List of abbreviations/acronyms	R	R	B.5.2.13	<loa>
Quality of material			B.5.2.15	<qual.mat.info>
Safety, care, and handling			B.5.2.16	<sftyinfo>
Nuclear hardness			B.5.2.17	<hcp>
Calibration			B.5.2.18	<calref>
Supporting information for repair parts, special tools, TMDE, and support equipment			B.5.2.25	<supdata>
Copyright credit line			B.5.2.26	<copyrt>
EQUIPMENT DESCRIPTION AND DATA WORK PACKAGE	R	R	B.5.3	<descwp>
Equipment characteristics, capabilities, and features	R	R	B.5.3.3	<eqpinfo>
Location and description of major components (*Not required for Conventional and Chemical Ammunition TMs*)	R	R	B.5.3.4	<locdesc>
Differences between models			B.5.3.5	<eqpdiff>
Equipment data	R	R	B.5.3.6	<eqpdata>

Source: https://assist.dla.mil -- Downloaded: 2016-12-05T17:12Z
Check the source to verify that this is the current version before use.

TABLE A-XX. IETM Requirement Matrix for _____.

IETM Content	-13&P	-14&P	MIL-STD-40051-1 Reference	Element Name
THEORY OF OPERATION WORK PACKAGE	R	R	B.5.4	<thrywp>
OPERATOR INSTRUCTIONS	R	R	C.5.1	<opim>
DESCRIPTION AND USE OF OPERATOR CONTROLS AND INDICATORS WORK PACKAGE	R	R	C.5.2.3	<ctrlindwp>
OPERATION UNDER USUAL CONDITIONS WORK PACKAGE	R	R	C.5.2.4	<opusualwp>
Security measures for electronic data			C.5.2.4.3	<secref>
Siting requirements			C.5.2.4.4	<site>
Shelter requirements			C.5.2.4.5	<shelter>
Assembly and preparation for use			C.5.2.4.6	<prepforuse>
Initial adjustments, before use and self-test			C.5.2.4.7	<initial>
Operating procedures	R	R	C.5.2.4.8	<oper>
Decals and instruction plates			C.5.2.4.8.2	<instructplt>
Operating auxiliary equipment			C.5.2.4.9	<operaux>
Preparation for movement			C.5.2.4.10	<prepmove>
OPERATION UNDER UNUSUAL CONDITIONS WORK PACKAGE	R	R	C.5.2.5	<opunuwp>
Security measures for electronic data			C.5.2.5.3	<secref>
Unusual environment / weather	R	R	C.5.2.5.3.2	<unusualenv>
Fording and swimming			C.5.2.5.3.3	<fording>
Interim nuclear, biological, and chemical (NBC) decontamination procedures			C.5.2.5.3.4	<decon>
Jamming and electronic countermeasures (ECM) procedures			C.5.2.5.3.5	<ecm>
Degraded operation procedures			C.5.2.5.3.6	<degraded>
EMERGENCY WORK PACKAGE			C.5.2.6	<emergencywp>
STOWAGE AND DECAL / DATA PLATE GUIDE WORK PACKAGE			C.5.2.7	<stowagewp>
ON-VEHICLE EQUIPMENT LOADING PLAN WORK PACKAGE			C.5.2.8	<eqploadwp>
TROUBLESHOOTING PROCEDURES ***NOTE*** *The notation (*) indicates that, if required, at least one of the these content items shall be included*	R	R	D.5.1	<tim>
INTRODUCTION WORK PACKAGE			D.5.5.3	<tsintrowp>
TECHINICAL DESCRIPTION WORK PACKAGE			D.5.5.4	<techdescwp>
Equipment description and data			D.5.5.4.3	<descproc>
Controls and indicators			D.5.5.4.4	<ctrlindproc>
Theory of Operation			D.5.5.4.5	<thryproc>

Source: https://assist.dla.mil -- Downloaded: 2016-12-05T17:12Z
Check the source to verify that this is the current version before use.

TABLE A-XX. IETM Requirement Matrix for _____.

IETM Content	-13&P	-14&P	MIL-STD-40051-1 Reference	Element Name
TROUBLESHOOTING INDEX WORK PACKAGE			D.5.5.5	<tsindxwp>
**OPERATIONAL CHECKOUT WORK PACKAGE*			D.5.5.8.3	<opcheckwp>
**TROUBLESHOOTING PROCEDURES WORK PACKAGE*			D.5.5.8.4	<tswp>
**COMBINED OPERATIONAL CHECKOUT AND TROUBLESHOOTING PROCEDURES WORK PACKAGE*			D.5.5.8.5	<opcheck-tswp>
**DIAGNOSTICS WORK PACKAGE*			D.5.6	<diagnosticswp>
MAINTENANCE INSTRUCTIONS	R	R	E.5.1	<mim>
SERVICE UPON RECEIPT WORK PACKAGE	R	R	E.5.3.2	<surwp>
Siting			E.5.3.2.3.1	<siting>
Shelter requirements			E.5.3.2.3.2	<shltr>
Service upon receipt of materiel	R	R	E.5.3.2.3.3	<surmat>
Installation instructions	R	R	E.5.3.2.3.4	<install>
Preliminary servicing of equipment			E.5.3.2.3.5	<preserv>
Preliminary checks and adjustment of equipment			E.5.3.2.3.6	<prechkadj>
Preliminary calibration of equipment			E.5.3.2.3.7	<precal>
Circuit alignment			E.5.3.2.3.8	<calign>
Ammunition markings			E.5.3.2.3.9.1	<ammo.markings>
Classification of defects			E.5.3.2.3.9.2	<ammo.defect>
Ammunition handling			E.5.3.2.3.9.3	<ammo.handling>
Procedures to activate ammunition			E.5.3.2.3.9.4	<arm>
Other service upon receipt task			E.5.3.2.3.10	<other.surtsk>
Follow-on maintenance			E.5.3.2.3.11	<followon.maintsk>
EQUIPMENT / USER FITTING INSTRUCTIONS WORK PACKAGE (PERSONAL USE EQUIPMENT)			E.5.3.3	<perseqpwp>
PMCS INTRODUCTION WORK PACKAGE			E.5.3.4.1	<pmcsintrowp>
PMCS, INCLUDING LUBRICATION INSTRUCTION, WORK PACKAGE			E.5.3.4.2	<pmcswp>
MAINTENANCE WORK PACKAGES ***NOTE*** *As applicable, the following maintenance tasks shall be presented in the general order listed below:*	R	R	E.5.3.5	<maintwp>
Servicing			E.5.3.5.3.3	<service>
Ground handling			E.5.3.5.3.4	<groundtsk>
Inspection of installed items			E.5.3.5.3.5	<inspinstitm>
Removal			E.5.3.5.3.6	<remove>
Disassembly			E.5.3.5.3.7	<disassem>

Source: https://assist.dla.mil -- Downloaded: 2016-12-05T17:12Z
Check the source to verify that this is the current version before use.

TABLE A-XX. IETM Requirement Matrix for _____.

IETM Content	-13&P	-14&P	MIL-STD-40051-1 Reference	Element Name
Cleaning			E.5.3.5.3.8	<clean>
Inspection - acceptance and rejection criteria			E.5.3.5.3.9	<acptrejinsp>
Nondestructive testing inspection (NDTI)			E.5.3.5.3.10	<ndti>
Repair or replacement			E.5.3.5.3.11	<repair-rplc>
Alignment			E.5.3.5.3.12	<align>
Painting			E.5.3.5.3.13	<paint>
Lubrication			E.5.3.5.3.14	<lube>
Assembly			E.5.3.5.3.15	<assem>
Test and inspection			E.5.3.5.3.16	<test-inspect>
Installation			E.5.3.5.3.17	<install>
Adjustment			E.5.3.5.3.18	<adjust>
Calibration			E.5.3.5.3.19	<calibration>
Radio interference suppression			E.5.3.5.3.20	<ris>
Placing in service			E.5.3.5.3.21	<pis>
Testing			E.5.3.5.3.22	<test-pass>
Preparation for storage or shipment			E.5.3.5.3.25	<pss>
Classification of defects			E.5.3.5.3.26	<ammo.defect>
Handling ammunition			E.5.3.5.3.27	<ammo.handling>
Ammunition markings			E.5.3.5.3.28	<ammo.markings>
Procedures for ammunition activation			E.5.3.5.3.29	<arm>
Additional maintenance task			E.5.3.5.3.30	<other.maintsk>
Follow-on maintenance			E.5.3.5.3.31	<followon.maintsk>
GENERAL MAINTENANCE WORK PACKAGE			E.5.3.6	<maintwp>
LUBRICATION WORK PACKAGE			E.5.3.7	<lubewp>
ILLUSTRATED LIST OF MANUFACTURED ITEMS			E.5.3.8.4.10	<manuwp>
Introduction work package			E.5.3.9.1	<intro>
Manufacturing procedures work package			E.5.3.9.2	<manfcprocwp>
TORQUE LIMITS WORK PACKAGE			E.5.3.10	<torquewp>
WIRING DIAGRAMS WORK PACKAGE			E.5.3.11	<wiringwp>
AUXILIARY EQUIPMENT MAINTENANCE INSTRUCTIONS			E.5.1 E.5.2.6	<mim> <auxilarycategory>
AUXILIARY EQUIPMENT MAINTENANCE WORK PACKAGE			E.5.3.13	<auxeqpwp>
ILLUSTRATED LIST OF MANUFACTURED ITEMS			E.5.3.8.4.10	<manuwp>
Introduction work package			E.5.3.9.1	<intro>
Manufacturing procedures work package			E.5.3.9.2	<manfcprocwp>
TORQUE LIMITS WORK PACKAGE			E.5.3.10	<torquewp>

Source: https://assist.dla.mil -- Downloaded: 2016-12-05T17:12Z
Check the source to verify that this is the current version before use.

TABLE A-XX. IETM Requirement Matrix for _____.

IETM Content	-13&P	-14&P	MIL-STD-40051-1 Reference	Element Name
WIRING DIAGRAMS WORK PACKAGE			E.5.3.11	<wiringwp>
AMMUNITION MAINTENANCE INSTRUCTIONS			E.5.1 E.5.2.7	<mim> <ammunitioncategory>
AMMUNITION MAINTENANCE WORK PACKAGE			E.5.3.14.1	<ammowp>
AMMUNITION MARKING INFORMATION WORK PACKAGE			E.5.3.14.2	<ammo.markingwp>
FOREIGN AMMUNITION (NATO) WORK PACKAGE			E.5.3.14.3	<natowp>
AIRCRAFT PMS/PMD			E.5.3.15	<mim> <pmscategory>
GENERAL INFORMATION WORK PACKAGE			B..5.5	<pms-geninfo>
PMS/PMD INSPECTION WORK PACKAGE			E.5.3.15	<pms-inspecwp>
AIRCRAFT PHASED MAINTEANCE			E.5.3.16	<mim> <checklistcategory>
GENERAL INFORMATION WORK PACKAGE			B.5.6	<pm-geninfo>
PM INSPECTION WORK PACKAGE			E.5.3.16	<pmi-chklistwp>
General inspection			E.5.3.16.4	<geninspec>
Aircraft area inspection			E.5.3.16.4	<areainspec>
Aircraft power on checks			E.5.3.16.4	<pwron-inspec>
Aircraft final inspection			E.5.3.16.4	<finalinspec>
PARTS INFORMATION	R	R	F.5.3.1	<pim>
INTRODUCTION WORK PACKAGE	R	R	F.5.3.3	<introwp>
REPAIR PARTS LIST WORK PACKAGE	R	R	0	<plwp>
REPAIR PARTS FOR SPECIAL TOOLS WORK PACKAGE			F.5.3.6	<stl_partswp>
KIT PARTS LIST WORK PACKAGE			F.5.3.6.3.1	<kitswp>
BULK ITEM WORK PACKAGE			F.5.3.8	<bulk_itemswp>
SPECIAL TOOLS LIST WORK PACKAGE			F.5.3.8.1	<stlwp>
NSN INDEX WORK PACKAGE			F.5.3.10.1	<nsnindxwp>
PART NUMBER INDEX WORK PACKAGE			F.5.3.10.1	<pnindxwp>
REFERENCE DESIGNATOR INDEX WORK PACKAGE			F.5.3.10.2.1	<refdesindxwp>
DESTRUCTION OF EQUIPMENT TO PREVENT ENEMY USE INFORMATION			Appendix H	<destruct-ginfowp> <destruct-materialwp>
GENERAL INFORMATION WORK PACKAGE			H.5.1	<destruct-ginfowp>
DESTRUCTION OF EQUIPMENT TO PREVENT ENEMY USE WORK PACKAGE			H.5.2	<destruct-ginfowp>

Source: https://assist.dla.mil -- Downloaded: 2016-12-05T17:12Z
Check the source to verify that this is the current version before use.

TABLE A-XX. IETM Requirement Matrix for _____.

IETM Content	-13&P	-14&P	MIL-STD-40051-1 Reference	Element Name
BATTLE DAMAGE ASSESSMENT AND REPAIR (BDAR) INFORMATION			APPENDIX I	
GENERAL INFORMATION WORK PACKAGE			I.5.2.1	<bdar-geninfowp>
BATTLE DAMAGE ASSESSMENT WORK PACKAGES			I.5.2.2	<damage-assesswp>
REPAIR WORK PACKAGES			I.5.2.3	<genrepairwp>
SPECIAL/FABRICATED TOOLS WORK PACKAGE			I.5.2.5	<bdartoolswp>
SUBSTITUTE MATRIALS/PARTS WORK PACKAGE			I.5.2.7	<susbstitute-matwp>
SUPPORTING INFORMATION ***NOTE*** *Applicable supporting information work packages shall be arranged in the order in which they are presented here and numbered accordingly.*	R	R	G.5.1	<sim>
REFERENCES WORK PACKAGE	R	R	G.5.2	<refwp>
INTRODUCTION FOR STANDARD TWO-LEVEL OR AVIATION TWO-LEVEL MAC WORK PACKAGE	R (field only)	R (field only)	G.5.3.3 G.5.3.3A	<macintrowp>
MAC WORK PACKAGE (STANDARD TWO-LEVEL OR AVIATION TWO-LEVEL)	R (field only)	R (field only)	G.5.3.4	<macwp>
COMPONENTS OF END ITEM (COEI AND BASIC ISSUE ITEMS (BII) LISTS WORK PACKAGE	R (Operator only)	R (Operator only)	G.5.4	<coeibiiwp>
ADDITIONAL AUTHORIZATION LIST (AAL) WORK PACKAGE			G.5.5	<aalwp>
EXPENDABLE AND DURABLE ITEMS LIST WORK PACKAGE	R	R	G.5.6	<explistwp>
CRITICAL SAFETY ITEMS(CSI) AND FLIGHT SAFETY CRITICAL AIRCRAFT PARTS (FSCAP) WORK PACKAGE			G.5.9	<csi.fscap.wp>
SUPPORT ITEMS WORK PACKAGE			G.5.10	<supitemwp>
ADDITIONAL SUPPORTING WORK PACKAGES			*G.5.11*	*<GENWP>*

Legend
R Required
P Prohibited
Shaded As Required

Source: https://assist.dla.mil -- Downloaded: 2016-12-05T17:12Z
Check the source to verify that this is the current version before use.

TABLE A-XXI. IETM Requirement Matrix for _____.

TM Content	-23&P	-24&P	-40&P	MIL-STD-40051-1 Reference	Element Name
INTRODUCTORY MATTER	R	R	R	5.2.1	<framed.frnt>
IETM Installation data	R	R	R	5.2.1.1	
CD content frame	R	R	R	5.2.1.2	
(MC) Promulgation letter				5.2.1.3	<promulgation>
Warning summary				5.2.1.4	<warnsum>
Revision summary frame	R	R	R	e	<revisionsummary>
Identification information	R	R	R	5.2.1.6	<frntcover>
Table of contents	R	R	R	5.2.1.7	<contents>
How to use this IETM	R	R	R	5.2.1.8	<howtouse>
GENERAL INFORMATION, EQUIPMENT DESCRIPTION AND THEORY OF OPERATION	R	R	R	B.5.1	<gim>
GENERAL INFORMATION WORK PACKAGE	R	R	R	B.5.2	<ginfowp>
Scope	R	R	R	B.5.2.3	<scope>
Maintenance forms, records, and reports	R	R	R	B.5.2.4	<mfrr>
Reporting equipment improvement recommendations (EIR)	R	R	R	B.5.2.5	<eir>
Hand receipt (HR) information				B.5.2.6	<handreceipt>
Corrosion prevention and control (CPC)	R	R	R	B.5.2.7	<cpcdata>
Ozone depleting substances (ODS)				B.5.2.8	<odsdata>
Destruction of Army materiel to prevent enemy use	R	R	R	B.5.2.9	<destructmat>
Preparation for storage or shipment	R	R	R	B.5.2.10	<pssref>
Warranty information				B.5.2.11	<wrntyref>
Nomenclature cross-reference list				B.5.2.12	<nomenreflist>
List of abbreviations/acronyms	R	R	R	B.5.2.13	<loa>
Quality assurance (QA) Aviation	R	R	R	B.5.2.14	<qainfo>
Non-aviation	P	P	P		
Quality of material	R	R	R	B.5.2.15	<qual.mat.info>
Safety, care, and handling				B.5.2.16	<sftyinfo>
Nuclear hardness				B.5.2.17	<hcp>
Calibration				B.5.2.18	<calref>
Flight safety critical aircraft part Aviation	R	R	R	B.5.2.23	<fscapreq>
Non-Aviation	P	P	P		
Supporting information for repair parts, special tools, TMDE, and support equipment				B.5.2.25	<supdata>
Copyright credit line				B.5.2.26	<copyrt>
EQUIPMENT DESCRIPTION AND DATA WORK PACKAGE	R	R	R	B.5.3	<descwp>
Equipment characteristics, capabilities, and features	R	R	R	B.5.3.3	<eqpinfo>

Source: https://assist.dla.mil -- Downloaded: 2016-12-05T17:12Z
Check the source to verify that this is the current version before use.

TABLE A-XXI. IETM Requirement Matrix for _____.

TM Content	-23&P	-24&P	-40&P	MIL-STD-40051-1 Reference	Element Name
Location and description of major components (*Not required for Conventional and Chemical Ammunition IETMs*)	R	R	R	B.5.3.4	<locdesc>
Differences between models				B.5.3.5	<eqpdiff>
Equipment data	R	R	R	B.5.3.6	<eqpdata>
THEORY OF OPERATION WORK PACKAGE	R	R	R	B.5.4	<thrywp>
TROUBLESHOOTING PROCEDURES ***NOTE*** *The notation (*) indicates that, if required, at least one of the these content items shall be included*	R	R	R	D.5.1	<tim>
INTRODUCTION WORK PACKAGE				D.5.5.3	<tsintrowp>
TECHINICAL DESCRIPTION WORK PACKAGE				D.5.5.4	<techdescwp>
Equipment description and data				D.5.5.4.3	<descproc>
Controls and indicators				D.5.5.4.4	<ctrlindproc>
Theory of Operation				D.5.5.4.5	<thryproc>
TROUBLESHOOTING INDEX WORK PACKAGE				D.5.5.5	<tsindxwp>
**OPERATIONAL CHECKOUT WORK PACKAGE*				D.5.5.8.3	<opcheckwp>
**TROUBLESHOOTING PROCEDURES WORK PACKAGE*				D.5.5.8.4	<tswp>
**COMBINED OPERATIONAL CHECKOUT AND TROUBLESHOOTING PROCEDURES WORK PACKAGE*				D.5.5.8.5	<opcheck-tswp>
**DIAGNOSTICS WORK PACKAGE*				D.5.6	<diagnosticswp>
MAINTENANCE INSTRUCTIONS	R	R	R	E.5.1	<mim>
SERVICE UPON RECEIPT WORK PACKAGE	R	R	R	E.5.3.2	<surwp>
Siting requirements				E.5.3.2.3.1	<siting>
Shelter requirements				E.5.3.2.3.2	<shltr>
Service upon receipt of materiel				E.5.3.2.3.3	<surmat>
Installation instructions				E.5.3.2.3.4	<install>
Preliminary servicing of equipment				E.5.3.2.3.5	<preserv>
Preliminary checks and adjustment of equipment				E.5.3.2.3.6	<prechkadj>
Preliminary calibration of equipment				E.5.3.2.3.7	<precal>
Circuit alignment				E.5.3.2.3.8	<calign>
Ammunition markings				E.5.3.2.3.9.1	<ammo.markings>
Classification of defects				E.5.3.2.3.9.2	<ammo.defect>
Ammunition handling				E.5.3.2.3.9.3	<ammo.handling>
Procedures to activate ammunition				E.5.3.2.3.9.4	<arm>
Additional service upon receipt task				E.5.3.2.3.10	<other.surtsk>
Follow-on maintenance				E.5.3.2.3.11	<followon.maintsk>

Source: https://assist.dla.mil -- Downloaded: 2016-12-05T17:12Z
Check the source to verify that this is the current version before use.

TABLE A-XXI. IETM Requirement Matrix for _____.

TM Content		-23&P	-24&P	-40&P	MIL-STD-40051-1 Reference	Element Name
EQUIPMENT / USER FITTING INSTRUCTIONS WORK PACKAGE (PERSONAL USE EQUIPMENT)					E.5.3.3	<perseqpwp>
PMCS INTRO WORK PACKAGE	Aviation	P	P	P	E.5.3.4.1	<pmcsintrowp>
	Non-Aviation					
PMCS WORK PACKAGE	Aviation	P	P	P	E.5.3.4.2	<pmcswp>
	Non-Aviation					
PREVENTIVE MAINTENANCE	Aviation	R	R	R	E.5.3.12.1	<pmiwp>
INSPECTION WORK PACKAGE	Non-Aviation	P	P	P		
MAINTENANCE WORK PACKAGES ***NOTE*** *As applicable, the following maintenance tasks shall be presented in the general order listed below:*		R	R	R	E.5.3.5	<maintwp>
Assembly and preparation for use	Aviation				E.5.3.5.3.2	<prepforuse>
	Non-Aviation	P	P	P		
Servicing					E.5.3.5.3.3	<service>
Ground handling					E.5.3.5.3.4	<groundtsk>
Inspection of installed items					E.5.3.5.3.5	<inspinstitm>
Removal					E.5.3.5.3.6	<remove>
Disassembly					E.5.3.5.3.7	<disassem>
Cleaning					E.5.3.5.3.8	<clean>
Inspection - acceptance and rejection criteria					E.5.3.5.3.9	<acptrejinsp>
Nondestructive testing inspection (NDTI)					E.5.3.5.3.10	<ndti>
Repair or replacement					E.5.3.5.3.11	<repair-rplc>
Alignment					E.5.3.5.3.12	<align>
Painting					E.5.3.5.3.13	<paint>
Lubrication					E.5.3.5.3.14	<lube>
Assembly					E.5.3.5.3.15	<assem>
Test and inspection					E.5.3.5.3.16	<test-inspect>
Installation					E.5.3.5.3.17	<install>
Adjustment					E.5.3.5.3.18	<adjust>
Calibration					E.5.3.5.3.19	<calibration>
Radio interference suppression					E.5.3.5.3.20	<ris>
Placing in service					E.5.3.5.3.21	<pis>
Testing					E.5.3.5.3.22	<test-pass>
Overhaul and retirement schedule	Aviation				E.5.3.5.3.24	<orsch>
	Non-Aviation	P	P	P		
Preparation for storage or shipment					E.5.3.5.3.25	<pss>
Classification of defects					E.5.3.5.3.26	<ammo.defect>
Handling ammunition					E.5.3.5.3.27	<ammo.handling>

Source: https://assist.dla.mil -- Downloaded: 2016-12-05T17:12Z
Check the source to verify that this is the current version before use.

TABLE A-XXI. IETM Requirement Matrix for _____.

TM Content	-23&P	-24&P	-40&P	MIL-STD-40051-1 Reference	Element Name
Ammunition markings				E.5.3.5.3.28	<ammo.markings>
Procedures for ammunition activation				E.5.3.5.3.29	<arm>
Additional maintenance task				E.5.3.5.3.30	<other.maintsk>
Follow-on maintenance				E.5.3.5.3.31	<followon.maintsk>
GENERAL MAINTENANCE WORK PACKAGE				E.5.3.6	<maintwp>
LUBRICATION INSTRUCTION WORK PACKAGE				E.5.3.7	<lubewp>
ILLUSTRATED LIST OF MANUFACTURED ITEMS				E.5.3.8.4.10	<manuwp>
Introduction work package				E.5.3.9.1	<intro>
Manufacturing procedures work package				E.5.3.9.2	<manfcprocwp>
TORQUE LIMITS WORK PACKAGE				E.5.3.10	<torquewp>
AIRCRAFT INVENTORY MASTER GUIDE WORK PACKAGE Aviation				E.5.3.12.2	<inventorywp>
Non-Aviation	P	P	P		
STORAGE OF AIRCRAFT WORK PACKAGE Aviation				E.5.3.12.3	<storagewp>
Non-Aviation	P	P	P		
WEIGHING AND LOADING WORK PACKAGE Aviation	R	R	R	E.5.3.12.4	<wtloadwp>
Non-Aviation	P	P	P		
WIRING DIAGRAMS WORK PACKAGE				E.5.3.11	<wiringwp>
AUXILIARY EQUIPMENT MAINTENANCE INSTRUCTIONS				E.5.1 E.5.2.6	<mim> <auxiliarycategory>
AUXILIARY EQUIPMENT MAINTENANCE WORK PACKAGE				E.5.3.13	<auxeqpwp>
ILLUSTRATED LIST OF MANUFACTURED ITEMS				E.5.3.8.4.10	<manuwp>
Introduction work package				E.5.3.9.1	<intro>
Manufacturing procedures work package				E.5.3.9.2	<manfcprocwp>
TORQUE LIMITS WORK PACKAGE				E.5.3.10	<torquewp>
WIRING DIAGRAMS WORK PACKAGE				E.5.3.11	<wiringwp>
AMMUNITION MAINTENANCE INSTRUCTIONS				E.5.1 E.5.2.7	<mim> <ammunitioncategory>
AMMUNITION MAINTENANCE WORK PACKAGE				E.5.3.14.1	<ammowp>
AMMUNITION MARKING INFORMATION WORK PACKAGE				E.5.3.14.2	<ammo.markingwp>
FOREIGN AMMUNITION (NATO) WORK PACKAGE				E.5.3.14.3	<natowp>
AIRCRAFT PMS/PMD				E.5.3.15	<mim> <pmscategory>
GENERAL INFORMATION WORK PACKAGE				B..5.5	<pms-geninfo>
PMS/PMD INSPECTION WORK PACKAGE				E.5.3.15	<pms-inspecwp>

Source: https://assist.dla.mil -- Downloaded: 2016-12-05T17:12Z
Check the source to verify that this is the current version before use.

TABLE A-XXI. IETM Requirement Matrix for _____.

TM Content	-23&P	-24&P	-40&P	MIL-STD-40051-1 Reference	Element Name
AIRCRAFT PHASED MAINTEANCE				E.5.3.16	<mim> <checklistcategory>
GENERAL INFORMATION WORK PACKAGE				B.5.6	<pm-geninfo>
PM INSPECTION WORK PACKAGE				E.5.3.16	<pmi-chklistwp>
General inspection				E.5.3.16.4	<geninspec>
Aircraft area inspection				E.5.3.16.4	<areainspec>
Aircraft power on checks				E.5.3.16.4	<pwron-inspec>
Aircraft final inspection				E.5.3.16.4	<finalinspec>
PARTS INFORMATION	R	R	R	F.5.3.1	<pim>
INTRODUCTION WORK PACKAGE	R	R	R	F.5.3.3	<introwp>
REPAIR PARTS LIST WORK PACKAGE	R	R	R	0	<plwp>
REPAIR PARTS FOR SPECIAL TOOLS WORK PACKAGE				F.5.3.6	<stl_partswp>
KIT PARTS LIST WORK PACKAGE				F.5.3.6.3.1	<kitswp>
BULK ITEMS WORK PACKAGE				F.5.3.8	<bulk_itemswp>
SPECIAL TOOLS LIST WORK PACKAGE				F.5.3.8.1	<stlwp>
NSN INDEX WORK PACKAGE				F.5.3.10.1	<nsnindxwp>
PART NUMBER INDEX WORK PACKAGE				F.5.3.10.1	<pnindxwp>
REFERENCE DESIGNATOR INDEX WORK PACKAGE				F.5.3.10.2.1	<refdesindxwp>
BATTLE DAMAGE ASSESSMENT AND REPAIR (BDAR) INFORMATION				APPENDIX I	
GENERAL INFORMATION WORK PACKAGE				I.5.2.1	<bdar-geninfowp>
BATTLE DAMAGE ASSESSMENT WORK PACKAGES				I.5.2.2	<damage-assesswp>
REPAIR WORK PACKAGES				I.5.2.3	<genrepairwp>
SPECIAL/FABRICATED TOOLS WORK PACKAGE				I.5.2.5	<bdartoolswp>
SUBSTITUTE MATRIALS/PARTS WORK PACKAGE				I.5.2.7	<susbstitute-matwp>
SUPPORTING INFORMATION ***NOTE*** *Applicable supporting information work packages shall be arranged in the order in which they are presented here and numbered accordingly.*	R	R	R	G.5.1	<sim>
REFERENCES WORK PACKAGE	R	R	R	G.5.2	<refwp>
INTRODUCTION FOR STANDARD TWO-LEVEL OR AVIATION TWO-LEVEL MAC WORK PACKAGE	R	R	P	G.5.3.3(Standard) G.5.3.3A (Aviation)	<macintrowp>

Source: https://assist.dla.mil -- Downloaded: 2016-12-05T17:12Z
Check the source to verify that this is the current version before use.

TABLE A-XXI. IETM Requirement Matrix for _____.

TM Content	-23&P	-24&P	-40&P	MIL-STD-40051-1 Reference	Element Name
MAC WORK PACKAGE (STANDARD TWO-LEVEL OR AVIATION TWO-LEVEL ONLY)	R	R	P	G.5.3.4	<macwp> <avmac>
EXPENDABLE AND DURABLE ITEMS LIST WORK PACKAGE	R	R	R	G.5.6	<explistwp>
TOOL IDENTIFICATION LIST WORK PACKAGE				G.5.7	<toolidwp>
MANDATORY REPLACEMENT PARTS WORK PACKAGE				G.5.8	<mrplwp>
CRITICAL SAFETY ITEMS(CSI) AND FLIGHT SAFETY CRITICAL AIRCRAFT PARTS (FSCAP) WORK PACKAGE				G.5.9	<csi.fscap.wp>
SUPPORT ITEMS WORK PACKAGE				G.5.10	<supitemwp>
ADDITIONAL SUPPORTING WORK PACKAGES				G.5.11	<genwp>

Legend
R Required
P Prohibited
Shaded As Required

Source: https://assist.dla.mil -- Downloaded: 2016-12-05T17:12Z
Check the source to verify that this is the current version before use.

TABLE A-XXII. DMWR/NMWR Requirement Matrix for _____.

DMWR/NMWR Content	DMWR with Parts Info	DMWR with Overhaul Standards with Parts Info	NMWR with Parts Info	MIL-STD-40051-1 Reference	Element Name
INTRODUCTORY MATTER	R	R	R	5.2.1	<framed.frnt>
IETM Installation data	R	R	R	5.2.1.1	
CD content frame	R	R	R	5.2.1.2	
(MC) Promulgation letter				5.2.1.3	<promulgation>
Warning summary				5.2.1.4	<warnsum>
Revision summary frame	R	R	R	e	<revisionsummary>
Identification information	R	R	R	5.2.1.6	<frntcover>
Table of contents	R	R	R	5.2.1.7	<contents>
How to use this IETM	R	R	R	5.2.1.8	<howtouse>
DESCRIPTION AND THEORY OF OPERATION	R	R	R	B.5.1	<gim>
GENERAL INFORMATION WORK PACKAGE	R	R	R	B.5.2	<ginfowp>
Scope	R	R	R	B.5.2.3	<scope>
Maintenance forms, records, and reports	R	R	R	B.5.2.4	<mfrr>
Reporting equipment improvement recommendations (EIR)	R	R	R	B.5.2.5	<eir>
Corrosion prevention and control (CPC)	R	R	R	B.5.2.7	<cpcdata>
Ozone depleting substances (ODS)				B.5.2.8	<odsdata>
Destruction of Army materiel to prevent enemy use	R	R	R	B.5.2.9	<destructmat>
Preparation for storage or shipment	R	R	R	B.5.2.10	<pssref>
Warranty information				B.5.2.11	<wrntyref>
Nomenclature cross-reference list				B.5.2.12	<nomenreflist>
List of abbreviations/acronyms	R	R	R	B.5.2.13	<loa>
Quality assurance (QA)				B.5.2.14	<qainfo>
Quality of material	R	R	R	B.5.2.15	<qual.mat.info>
Safety, care, and handling				B.5.2.16	<sftyinfo>
Nuclear hardness				B.5.2.17	<hcp>
Calibration				B.5.2.18	<calref>
Engineering change proposals (ECP)	R	R	R	B.5.2.19	<ecp>
Modifications				B.5.2.20	<modification>
Deviations and exceptions	R	R	R	B.5.2.21	<deviation>
Mobilization requirements	R	R	R	B.5.2.22	<mobreq>
Flight safety critical aircraft parts (FSCAP) (Aircraft Only)				B.5.2.23	<fscapreq>
Cost considerations	R	R	R	B.5.2.24	<cost>

Source: https://assist.dla.mil -- Downloaded: 2016-12-05T17:12Z
Check the source to verify that this is the current version before use.

TABLE A-XXII. DMWR/NMWR Requirement Matrix for _____.

DMWR/NMWR Content	DMWR with Parts Info	DMWR with Overhaul Standards with Parts Info	NMWR with Parts Info	MIL-STD-40051-1 Reference	Element Name
Supporting information for repair parts, special tools, TMDE, and support equipment				B.5.2.25	<supdata>
Copyright credit line				B.5.2.26	<copyrt>
EQUIPMENT DESCRIPTION AND DATA WORK PACKAGE	R	R	R	B.5.3	<descwp>
Equipment characteristics, capabilities, and features	R	R	R	B.5.3.3	<eqpinfo>
Location and description of major components	R	R	R	B.5.3.4	<locdesc>
Differences between models				B.5.3.5	<eqpdiff>
Equipment data	R	R	R	B.5.3.6	<eqpdata>
THEORY OF OPERATION WORK PACKAGES				B.5.4	<thrywp>
TROUBLESHOOTING PROCEDURES	R	R	R	D.5.1	<tim>
INTRODUCTION WORK PACKAGE				D.5.5.3	<tsintrowp>
TECHINICAL DESCRIPTION WORK PACKAGE				D.5.5.4	<techdescwp>
Equipment description and data				D.5.5.4.3	<descproc>
Controls and indicators				D.5.5.4.4	<ctrlindproc>
Theory of Operation				D.5.5.4.5	<thryproc>
TROUBLESHOOTING INDEX WORK PACKAGE				D.5.5.5	<tsindxwp>
PRESHOP ANALYSIS WORK PACKAGE				D.5.5.6	<pshopanalwp>
COMPONENT CHECKLIST WORK PACKAGE				D.5.5.7	<compchklistwp>
OPERATIONAL CHECKOUT WORK PACKAGE				D.5.5.8.3	<opcheckwp>
TROUBLESHOOTING PROCEDURES WORK PACKAGE				D.5.5.8.4	<tswp>
COMBINED OPERATIONAL CHECKOUT AND TROUBLESHOOTING PROCEDURES WORK PACKAGE				D.5.5.8.5	<opcheck-tswp>
DIAGNOSTICS WORK PACKAGE				D.5.6	<diagnosticswp>
MAINTENANCE INSTRUCTIONS	R	R	R	E.5.1	<mim>
MAINTENANCE WORK PACKAGES ***NOTE*** *As applicable, the following maintenance tasks shall be presented in the general order listed below:*	R	R	R	E.5.3.5	<maintwp>

Source: https://assist.dla.mil -- Downloaded: 2016-12-05T17:12Z
Check the source to verify that this is the current version before use.

TABLE A-XXII. DMWR/NMWR Requirement Matrix for _____.

DMWR/NMWR Content	DMWR with Parts Info	DMWR with Overhaul Standards with Parts Info	NMWR with Parts Info	MIL-STD-40051-1 Reference	Element Name
Assembly and preparation for use (aviation only)				E.5.3.5.3.2	<prepforuse>
Servicing				E.5.3.5.3.3	<service>
Ground handling				E.5.3.5.3.4	<groundtsk>
Inspection of installed items				E.5.3.5.3.5	<inspinstitm>
Removal				E.5.3.5.3.6	<remove>
Disassembly				E.5.3.5.3.7	<disassem>
Cleaning				E.5.3.5.3.8	<clean>
Inspection - acceptance and rejection criteria				E.5.3.5.3.9	<acptrejinsp>
Nondestructive testing inspection (NDTI)				E.5.3.5.3.10	<ndti>
Repair or replacement				E.5.3.5.3.11	<repair-rplc>
Alignment				E.5.3.5.3.12	<align>
Painting				E.5.3.5.3.13	<paint>
Lubrication				E.5.3.5.3.14	<lube>
Assembly				E.5.3.5.3.15	<assem>
Test and inspection				E.5.3.5.3.16	<test-inspect>
Installation				E.5.3.5.3.17	<install>
Adjustment				E.5.3.5.3.18	<adjust>
Calibration				E.5.3.5.3.19	<calibration>
Radio interference suppression				E.5.3.5.3.20	<ris>
Placing in service				E.5.3.5.3.21	<pis>
Testing				E.5.3.5.3.22	<test-pass>
Preservation, packaging, and marking	R	R	R	E.5.3.5.3.23	<ppm>
Overhaul and retirement schedule (aircraft only)				E.5.3.5.3.24	<orsch>
Preparation for storage or shipment				E.5.3.5.3.25	<pss>
Classification of defects				E.5.3.5.3.26	<ammo.defect>
Handling ammunition				E.5.3.5.3.27	<ammo.handling>
Ammunition markings				E.5.3.5.3.28	<ammo.markings>
Procedures for ammunition activation				E.5.3.5.3.29	<arm>
Additional maintenance task				E.5.3.5.3.30	<other.maintsk>
Follow-on maintenance				E.5.3.5.3.31	<followon.maintsk>
GENERAL MAINTENANCE WORK PACKAGE				E.5.3.6	<maintwp>
LUBRICATION INSTRUCTIONS WORK PACKAGE				E.5.3.7	<lubewp>
FACILITIES WORK PACKAGE				E.5.3.8.1	<facilwp>

Source: https://assist.dla.mil -- Downloaded: 2016-12-05T17:12Z
Check the source to verify that this is the current version before use.

TABLE A-XXII. DMWR/NMWR Requirement Matrix for _____.

DMWR/NMWR Content	DMWR with Parts Info	DMWR with Overhaul Standards with Parts Info	NMWR with Parts Info	MIL-STD-40051-1 Reference	Element Name
OVERHAUL INSPECTION PROCEDURES (OIP) WORK PACKAGE				E.5.3.8.2	<oipwp>
DEPOT MOBILIZATION REQUIREMENTS WORK PACKAGE				E.5.3.8.3	<mobilwp>
QUALITY ASSURANCE REQUIREMENTS WORK PACKAGE	R	R	R	E.5.3.8.4	<qawp>
ILLUSTRATION LIST OF MANUFACTURED ITEMS				E.5.3.8.4.10	<manuwp>
Introduction work package				E.5.3.9.1	<intro>
Manufacturing procedures work package				E.5.3.9.2	<manfcprocwp>
TORQUE LIMITS WORK PACKAGE				E.5.3.10	<torquewp>
AIRCRAFT INVENTORY MASTER GUIDE WORK PACKAGE (AIRCRAFT ONLY)				E.5.3.12.2	<inventorywp>
STORAGE OF AIRCRAFT WORK PACKAGE (AIRCRAFT ONLY)				E.5.3.12.3	<storagewp>
WEIGHING AND LOADING WORK PACKAGE (AIRCRAFT ONLY)				E.5.3.12.4	<wtloadwp>
WIRING DIAGRAMS WORK PACKAGE				E.5.3.11	<wiringwp>
AUXILIARY EQUIPMENT MAINTENANCE INSTRUCTIONS				E.5.1 E.5.2.6	<mim> <auxiliarycategory>
AUXILIARY EQUIPMENT MAINTENANCE WORK PACKAGE				E.5.3.13	<auxeqpwp>
ILLUSTRATED LIST OF MANUFACTURED ITEMS				E.5.3.8.4.10	<manuwp>
Introduction work package				E.5.3.9.1	<intro>
Manufacturing procedures work package				E.5.3.9.2	<manfcprocwp>
TORQUE LIMITS WORK PACKAGE				E.5.3.10	<torquewp>
WIRING DIAGRAMS WORK PACKAGE				E.5.3.11	<wiringwp>
AMMUNITION MAINTENANCE INSTRUCTIONS				E.5.1 E.5.2.7	<mim> <ammunitioncategory>
AMMUNITION MAINTENANCE WORK PACKAGE				E.5.3.14.1	<ammowp>
AMMUNITION MARKING INFORMATION WORK PACKAGE				E.5.3.14.2	<ammo.markingwp>
FOREIGN AMMUNITION (NATO) WORK PACKAGE				E.5.3.14.3	<natowp>

Source: https://assist.dla.mil -- Downloaded: 2016-12-05T17:12Z
Check the source to verify that this is the current version before use.

TABLE A-XXII. DMWR/NMWR Requirement Matrix for _____.

DMWR/NMWR Content	DMWR with Parts Info	DMWR with Overhaul Standards with Parts Info	NMWR with Parts Info	MIL-STD-40051-1 Reference	Element Name
PARTS INFORMATION (DMWR, NMWR) (DMWR W/PARTS INFO, NMWR W/PARTS INFO)	 P R	 P R	 P R	F.5.3.1	<pim>
INTRODUCTION WORK PACKAGE	R	R	R	F.5.3.3	<introwp>
REPAIR PARTS LIST WORK PACKAGE	R	R	R	0	<plwp>
REPAIR PARTS FOR SPECIAL TOOLS WORK PACKAGE				F.5.3.6	<stl_partswp>
KIT PARTS LIST WORK PACKAGE				F.5.3.6.3.1	<kitswp>
BULK ITEMS WORK PACKAGE				F.5.3.8	<bulk_itemswp>
SPECIAL TOOLS LIST WORK PACKAGE				F.5.3.8.1	<stlwp>
NSN INDEX WORK PACKAGE				F.5.3.10.1	<nsnindxwp>
PART NUMBER INDEX WORK PACKAGE				F.5.3.10.1	<pnindxwp>
REFERENCE DESIGNATOR INDEX WORK PACKAGE				F.5.3.10.2.1	<refdesindxwp>
SUPPORTING INFORMATION ***NOTE*** *Applicable supporting information work packages shall be arranged in the order in which they are presented here and numbered accordingly.*	R	R	R	G.5.1	<sim>
REFERENCES WORK PACKAGE	R	R	R	G.5.2	<refwp>
EXPENDABLE AND DURABLE ITEMS LIST WORK PACKAGE	R	R	R	G.5.6	<explistwp>
TOOL IDENTIFICATION LIST WORK PACKAGE	R	R	R	G.5.7	<toolidwp>
MANDATORY REPLACEMENT PARTS WORK PACKAGE	R	R	R	G.5.8	<mrplwp>
CRITICAL SAFETY ITEMS (CSI) AND FLIGHT SAFETY CRITICAL AIRCRAFT PARTS (FSCAP) WORK PACKAGE	R	R	R	G.5.9	<csi.fscap.wp>
SUPPORT ITEMS WORK PACKAGE				G.5.10	<supitemwp>
ADDITIONAL SUPPORTING WORK PACKAGES				G.5.11	<genwp>

Legend
R Required
P Prohibited
Shaded As Required

Source: https://assist.dla.mil -- Downloaded: 2016-12-05T17:12Z
Check the source to verify that this is the current version before use.

REMARKS FOR TABLE

Source: https://assist.dla.mil -- Downloaded: 2016-12-05T17:12Z
Check the source to verify that this is the current version before use.

APPENDIX B

GENERAL INFORMATION, EQUIPMENT DESCRIPTION, AND THEORY OF OPERATION

B.1 SCOPE.

B.1.1 Scope. This appendix establishes the technical content requirements for the preparation of general information, equipment description, and theory of operation data for major weapon systems, and their related systems, subsystems, equipment, weapons replacement assemblies (WRAs), and shop replacement assemblies (SRAs). This Appendix is a mandatory part of this standard. The information contained herein is intended for compliance. The requirements are applicable for all maintenance levels through overhaul (depot) including Depot Maintenance Work Requirements (DMWRs) and National Maintenance Work Requirements (NMWRs).

B.2 APPLICABLE DOCUMENTS.

The applicable documents in section 2 apply to this appendix.

B.3 DEFINITIONS.

The definitions in section 3 apply to this appendix.

B.4 GENERAL REQUIREMENTS.

B.4.1 General. Descriptive information with theory of operation shall be prepared for weapon systems, major equipment, components, and applicable support and interface equipment. Information required to provide the user with a physical description, and functionally explain how the weapon system or equipment operates shall be included.

B.4.2 Maintenance level applicability. Requirements contained in this appendix are applicable to all maintenance levels unless specifically noted in bold and in parentheses (i.e., **Field**). The labeled requirements shall be applicable to all TMs containing that maintenance level. An explanation of all applicable Department of Army maintenance levels is provided in section 3.

B.4.3 Preparation of digital data for electronic delivery. Technical manual data prepared and delivered digitally in accordance with this standard shall be Extensible Markup Language (XML) tagged using the Document Type Definition (DTD) and the XML Stylesheet Language (XSL), or style sheets in accordance with MIL-STD-2361. Refer to 4.6 for information on obtaining or accessing the DTD and style sheets. XML tags used in the modular DTD are noted throughout the text of this standard in bracketed, bold characters (i.e., **<descwp>**) as a convenience for the TM author and to ensure that the tags are used correctly when developing a document instance.

B.4.4 Use of the DTD/XSLs. The DTD referenced in this standard interpret the technical content and structure for the functional requirements contained in this appendix and are mandatory for use. Development of IETMs is accomplished through the use of this standard, the DTD, and the guidance contained in MIL-HDBK-1222. The guidance contained in MIL-HDBK-1222 applies unless they conflict with the requirements in this appendix. The requirements in this appendix take precedence over the guidance contained in MIL-HDBK-1222. A style sheet is used to interpret the style and format for screen display. For additional information on DTD and specific XSLs or style sheets, refer to MIL-STD-2361.

Source: https://assist.dla.mil -- Downloaded: 2016-12-05T17:12Z
Check the source to verify that this is the current version before use.

B.4.5 Content structure and format. The examples provided in this standard are an accurate representation of the content structure and format requirements contained in this appendix and shall be followed to permit the effective use of the DTD for General Information, Equipment Description and Theory of Operation.

B.4.6 Style and format. This standard provides style and format requirements for the preparation of the technical content requirements described in this appendix. These requirements are considered mandatory and are intended for compliance.

B.4.7 IETM functionality. The specific level of functionality and user interaction to be provided in the IETMs shall be in accordance with the functionality matrix contained in Appendix A.

B.4.8 Work package development. Technical manual data developed in accordance with this appendix shall be divided into individual, stand alone units of information called work packages. A work package shall consist of descriptive, operational, maintenance, troubleshooting, support, or parts information for the weapon system or equipment.

B.4.9 Safety devices and interlocks. Information shall be prepared pertaining to the purpose and location of all safety devices and interlocks in conjunction with the pertinent procedures.

B.4.10 Electrostatic discharge (ESD) sensitive parts. If the equipment contains ESD sensitive parts, components, or circuits, cautions, and ESD labels shall be incorporated into the applicable tasks and procedures to ensure ESD sensitive parts are not damaged or degraded during maintenance and operation. Refer to 4.8.18 for requirements on labeling with ESD. Actions which could damage ESD sensitive parts, but which are not directly related to handling or operation of ESD sensitive parts, shall not be annotated with the ESD acronym, but shall be preceded by a caution statement.

B.4.11 Nuclear hardness. If the weapon system/equipment has nuclear survivability requirements (for example, over pressure and burst, thermal radiation, electromagnetic pulse, or transient radiation effects on electronics), cautions and Hardness-Critical Processes (HCP) labels shall be incorporated into the applicable tasks and procedures to ensure the hardness of the equipment is not degraded during handling or operation. Refer to 4.8.17 for requirements on labeling with HCP. Actions which could degrade hardness, but which are not directly involved in establishing nuclear hardness, shall not be annotated with the acronym, but shall be preceded by a caution statement.

B.4.12 Selective application and tailoring. This standard contains some requirements that may not be applicable to the preparation of all technical manuals. Selective application and tailoring of requirements contained in this appendix are the responsibility of the acquiring activity and shall be accomplished using Appendix A, IETM Functionality And Data Display Requirements And Content Selection Matrixes. The applicability of some requirements is also designated by one of the following statements: unless specified otherwise by the acquiring activity; as/when specified by the acquiring activity; or when specified by the acquiring activity.

Source: https://assist.dla.mil -- Downloaded: 2016-12-05T17:12Z
Check the source to verify that this is the current version before use.

B.5 DETAILED REQUIREMENTS.

B.5.1 Preparation of general information, equipment description, and theory of operation. General information, equipment description and theory of operation chapter shall be prepared and subdivided into individual work packages to provide the user with information for general requirements, descriptive data about the weapon system or equipment, and an explanation of how the weapon system or equipment works. Weapon system and equipment description and theory of operation data shall be developed in narrative or tabular form, or by whatever method is most simple or effective to convey the specific TM application. Descriptive information shall not contain any procedural data or warnings, cautions or notes. When necessary for clarity or improved understanding, illustrations shall be used to support the narrative or tabular information. Refer to 4.8.6.1 for description of work package identification information requirements. See MIL-HDBK-1222 for examples of work package identification information format.

B.5.1.1 Required general information, equipment description, and theory of operation data work packages. General information, equipment description information and theory of operation data shall be developed and divided into the following types of work packages. Nomenclature used to identify the weapon system, major equipment, components, and applicable support and interface equipment shall remain consistent throughout and between all work packages.

a. General information work package **<ginfowp>**.
b. Equipment description and data work package **<descwp>**.
c. Theory of operation work package **<thrywp>**.
d. General information work package (Preventive Maintenance Service Manual Only) <**pms-ginfowp**>.
e. General information work package (Phased Maintenance Checklist Manual Only) **<pm-ginfowp>**.

B.5.2 General information work package **<ginfowp>**. This work package shall contain the requirements provided in B.5.2.1 through B.5.2.26 as applicable, for the weapon system/equipment.

B.5.2.1 Work package identification information **<wpidinfo>**. Work package identification information is required for this work package (refer to 4.8.6.1).

B.5.2.2 Initial setup information **<wpinfo>**. Initial setup information is not required for this work package.

B.5.2.3 Scope **<scope>**. A brief statement shall be prepared to tell what is covered in the TM. As applicable, the following information shall also be included.

a. Type of manual.
b. Model number(s) and equipment name(s).
c. Purpose of equipment.
d. Special inclusions in the manual, such as drill procedures or on-vehicle loading plans.

Source: https://assist.dla.mil -- Downloaded: 2016-12-05T17:12Z
Check the source to verify that this is the current version before use.

B.5.2.4 Maintenance forms, records, and reports **<mfrr>**.

a. (A) Army Only TM. The following statement shall be include:

"**MAINTENANCE FORMS, RECORDS, AND REPORTS**

Department of the Army forms and procedures used for equipment maintenance will be those prescribed by (as applicable) DA PAM 750-8, The Army Maintenance Management System (TAMMS) Users Manual; DA PAM 738-751, Functional Users Manual for the Army Maintenance Management Systems - Aviation (TAMMS-A); or AR 700-138, Army Logistics Readiness and Sustainability."

b. (MC) Marines Only TM. The following statement shall be include:

"**MAINTENANCE FORMS, RECORDS, AND REPORTS**

Maintenance forms and records used by Marine Corps personnel are prescribed by TM 4700-15/1."

c. Multi-Service TM. The following statements shall be included only for multi-service technical publication and use only applicable services (e.g., if the Navy does not use the publication, do not include a statement for that Service):

"**MAINTENANCE FORMS, RECORDS, AND REPORTS**

(1) (A) Department of the Army forms and procedures used for equipment maintenance will be those prescribed by (as applicable) DA PAM 750-8, The Army Maintenance Management System (TAMMS) Users Manual; DA PAM 738-751, Functional Users Manual for the Army Maintenance Management Systems - Aviation (TAMMS-A); or AR 700-138, Army Logistics Readiness and Sustainability.

(2) (MC) Maintenance forms and records used by Marine Corps personnel are prescribed by TM 4700-15/1."

(3) (F) Maintenance forms and records used by Air Force personnel are prescribed in AFI 21-101 and the applicable TO 00-20 Series Technical Orders.

(4) (N) Navy users should refer to their service peculiar directives to determine applicable maintenance forms and records to be used."

d. (A) Army conventional and chemical ammunition. The following statement shall be added.

"Accidents involving injury to personnel or damage to material will be reported on DA Form 285, U.S. Army Accident Report in accordance with AR 385-40. Explosives and ammunition malfunctions will be reported in accordance with AR 75-1."

When applicable, add references to SB 742-1, Inspection of Supplies and Equipment Ammunition Surveillance Procedures.

Source: https://assist.dla.mil -- Downloaded: 2016-12-05T17:12Z
Check the source to verify that this is the current version before use.

B.5.2.5 Reporting equipment improvement recommendations **<eir>**. The following statement shall be included.

"REPORTING EQUIPMENT IMPROVEMENT RECOMMENDATIONS (EIR)

If your (*insert equipment short item name*) needs improvement, let us know. Send us an EIR. You, the user, are the only one who can tell us what you don't like about your equipment. Let us know why you don't like the design or performance. If you have Internet access, the easiest and fastest way to report problems or suggestions is to go to https://aeps.ria.army.mil/aepspublic.cfm (scroll down and choose the "Submit Quality Deficiency Report" bar). The Internet form lets you choose to submit an Equipment Improvement Recommendation (EIR), a Product Quality Deficiency Report (PQDR or a Warranty Claim Action (WCA). You may also submit your information using an SF 368 (Product Quality Deficiency Report). You can send your SF 368 via e-mail, regular mail, or facsimile using the addresses/facsimile numbers specified in DA PAM 750-8, The Army Maintenance Management System (TAMMS) Users Manual (*or DA PAM 738-751, Functional Users Manual for the Army Maintenance Management Systems - Aviation (TAMMS-A) for aviation systems*). We will send you a reply."

B.5.2.5.1 (MC) Additional Reporting equipment improvement recommendations Marine Corps TMs. The following statement shall be added for Marine Corps TMs:

"For Marine Corps users: Quality deficiency reports (QDR) shall be submitted on SF 368 in accordance with MCO 4855.10. A reply will be furnished to you."

B.5.2.6 Hand receipt (HR) manuals (Field) **<handreceipt>**. If handreceipt information exists and is included with the IETM, the following statement shall be included in the general information work package and a link/instructions shall be provided to access the information:

"HAND RECEIPT (HR) MANUALS

This IETM contains hand receipts that list end item related equipment (i.e., COEI, BII, and AAL) that must be accounted for."

If handreceipt information exists but is not included with the IETM, the following statement shall be included in the general information work package:

"**HAND RECEIPT (HR) MANUALS**

This manual has a companion document with a TM number followed by "-HR" (which stands for Hand Receipt). TM X-XXXX-XXX-10-HR consists of preprinted hand receipts that list end item related equipment (i.e., COEI, BII, and AAL) that must be accounted for. As an aid to property accountability, additional HR manuals may be requisitioned through normal publication channels."

Source: https://assist.dla.mil -- Downloaded: 2016-12-05T17:12Z
Check the source to verify that this is the current version before use.

B.5.2.7 Corrosion prevention and control <**cpcdata**>. A statement similar to the following shall be prepared.

"**CORROSION PREVENTION AND CONTROL (CPC)**

Corrosion Prevention and Control (CPC) of Army materiel is a continuing concern. It is important that any corrosion problems with this item be reported so that the problem can be corrected and improvements can be made to prevent the problem in future items.

Corrosion specifically occurs with metals. It is an electrochemical process that causes the degradation of metals. It is commonly caused by exposure to moisture, acids, bases, or salts. An example is the rusting of iron. Corrosion damage in metals can be seen, depending on the metal, as tarnishing, pitting, fogging, surface residue, and/or cracking.

Plastics, composites, and rubbers can also degrade. Degradation is caused by thermal (heat), oxidation (oxygen), solvation (solvents), or photolytic (light, typically UV) processes. The most common exposures are excessive heat or light. Damage from these processes will appear as cracking, softening, swelling, and/or breaking.

SF Form 368, Product Quality Deficiency Report should be submitted to the address specified in DA PAM 750-8, The Army Maintenance Management System (TAMMS) Users Manual."

For **aircraft IETMs** this information shall include a reference to TM 1-1500-344-23, volumes 1-4 (Cleaning and Corrosion Control).

B.5.2.8 Ozone depleting substances (ODS) <**odsdata**>. The use of Class 1 ozone depleting substances (ODS) for new acquisitions has been curtailed by Section 326 of the National Defense Authorization Act of Fiscal Year 1993 (Public Law 102, 484) and related Army policy. Ozone depleting sunstances are listed in Title VI of the Clean Air Act. For systems procured and fielded prior to the effectiveness of the above law (June 1993) that use a Class 1 ODS, a listing of those substances required to operate and maintain the system shall be included in the manual. This requirement applies to any system procured or fielded after June 1993 that requires the use of a Class 1 ODS, where the use of the ODS has been properly documented and waived. The procuring activity will provide a list of Class 1 ODS on request.

B.5.2.9 Destruction of Army materiel to prevent enemy use <**destructmat**>. Reference shall be made to the appropriate TM(s) or work packages covering the destruction of Army materiel to prevent enemy use as provided by the proponent activity.

B.5.2.10 Preparation for storage or shipment <**pssref**>. Reference shall be made to the preparation for storage or shipment procedures, including packaging and administrative storage, found in the applicable maintenance instructions work package.

B.5.2.11 Warranty information <**wrntyref**>. When the TM covers equipment that is under warranty and a Warranty Technical Bulletin (WTB) is published, the applicable WTB shall be referenced. When a WTB is not published, the following statement shall be included.

Source: https://assist.dla.mil -- Downloaded: 2016-12-05T17:12Z
Check the source to verify that this is the current version before use.

"**WARRANTY INFORMATION**

The (*insert name of equipment*) is warranted for (*insert miles or other timeframe as appropriate*). The warranty starts on the date found in block 23 of DA Form 2408-9, Equipment Control Record. Report all defects to your supervisor, who will take appropriate action."

B.5.2.12 Nomenclature cross-reference list **<nomenreflist>**. A statement on how to access the nomenclature cross-reference list shall be included (refer to 4.8.23).

B.5.2.13 List of abbreviations/acronyms **<loa>**. A list shall be prepared, consisting of all abbreviations, acronyms, signs, or symbols used in the manual. For **aircraft only**, a statement shall be prepared that abbreviations are in accordance with ASME Y14.38, except when the abbreviation stands for a marking actually found in the aircraft.

B.5.2.14 Quality Assurance **(QA) (DMWR/NMWR and aviation only) <qainfo>**. When specified by the acquiring activity, reference shall be made to the pertinent QA or include the appropriate general QA information. If QA information is not referenced but is included in the manual, it shall be stated that the text of each quality assurance procedure or step in the manual is preceded (and highlighted) by the addition of "QA check." For **aircraft maintenance IETMs**, include a reference to FM 3-04-500. The abbreviation "QA" shall be defined either in a note or in the text.

B.5.2.15 Quality of material **(-20 and above only) <qual.mat.info>**. A statement(s) similar to the following shall be included.

"Material used for replacement , repair, or modification must meet the requirements of this (*insert IETM*). If quality of material requirements are not stated in this (*insert IETM*), the material must meet the requirements of the drawings, standards, specifications, or approved engineering change proposals applicable to the subject equipment."

B.5.2.16 Safety, care, and handling **<sftyinfo>**. The following general precautions and safety regulations shall be prepared.

a. **(Ammunition TMs)** Information shall be prepared to comply with DA PAM 385-63. References to applicable Army Regulations (ARs) for range safety and danger zones during training and combat shall be included. Explanations and official definitions shall be prepared for such safety-related terms as "misfire," "hangfire," and "cook-off," which describe characteristics associated with the specific items(s) covered by the TM under preparation. A reference to AR 385-64 and DA PAM 385-64 shall be made for general ammunition care, handling, and safety.

b. For TMs covering equipment with radioactive parts or components, information shall be prepared to comply with Nuclear Regulatory Commission provisions, and references to applicable ARs and safety TMs on radioactive materials shall be included. If additional coverage on radioactive materials is needed, but is not included in applicable TMs, instructions shall be prepared as required. In addition, the following information shall be prepared for inclusion throughout the TM.

   (1) Nuclear warning notices shall be placed at the beginning of any instruction covering procedures that will expose personnel to a nuclear radiation hazard.

Source: https://assist.dla.mil -- Downloaded: 2016-12-05T17:12Z
Check the source to verify that this is the current version before use.

(2) Procedures to be followed prior to maintenance actions, or in the event of breakage of radioactive parts or components, including safety, care, and handling instructions.

(3) Radioactive parts or components shall be shown and identified on a parts location diagram or illustration, and warning notices.

(4) A list of radioactive parts or components and the type and quantity of radioactive material involved shall be included as part of equipment data (refer to B.5.3).

(5) Instructions for the disposal of radioactive material, such as the requirement to double bag all broken tritium sources in plastic.

c. Electrostatic Discharge (ESD) control standards for the protection of electrical and electronic parts, assemblies, and equipment shall be prepared. The ESD classes shall be identified. Refer to MIL-STD-1686 and MIL-HDBK-263, which contains ESD control procedures and material necessary to protect these items. For classifications of ESD marking procedures, refer to 4.8.18.

d. **(DMWRs/NMWRs only)** When applicable, reference shall be made to the electromagnetic compatibility standards (e.g., MIL-STD-461 and MIL-STD-462) that apply to the equipment covered in the DMWR/NMWR.

B.5.2.17 Nuclear hardness **<hcp>**. If equipment covered in the TM has nuclear survivability requirements (i.e., overpressure and burst, thermal radiation, electromagnetic pulse, or transient radiation effects on electronics), it shall be so stated. Refer to 4.8.17 for marking Hardness Critical Process (HCP) procedures. The following statement shall be included.

"**NUCLEAR HARDNESS**

All hardness critical procedures in this manual are marked with the acronym HCP as follows:

1. When an entire task, including all paragraphs and procedures, is considered hardness critical, only the task title will be marked by the acronym HCP, placed before the title.
2. When only certain processes and steps within the work package are hardness critical, only the applicable processes and steps will be marked by placement of the acronym HCP between each applicable step number and the text."

B.5.2.18 Calibration **<calref>**. Equipment requiring calibration shall be identified, and reference shall be made to the publication containing the applicable calibration procedure.

B.5.2.19 Engineering Change Proposals **(ECPs) (DMWR/NMWR only) <ecp>**. The following statement shall be included:

"**ENGINEERING CHANGE PROPOSALS**

Engineering Change Proposals (ECPs) will be submitted in accordance with AR 70-1 directly to (*enter the name and address of the responsible command or activity*) A reply will be furnished to you."

Source: https://assist.dla.mil -- Downloaded: 2016-12-05T17:12Z
Check the source to verify that this is the current version before use.

B.5.2.20 Modification list **(DMWR/NMWR only) <modification>**. MWOs and ECPs shall be identified for all modifications which have been incorporated into the work required by the DMWR/NMWR. MWOs shall be reported as outlined in DA PAM 750-8. The applicable MWOs and the ECPs shall be listed (title and number). This listing shall be supplied by the major subordinate command (MSC). Alternatively, a statement shall be made stating that the modifications must be applied during the overhaul of the item. For example:

"**MODIFICATIONS**

All Modification Work Orders (MWOs), all minor alteration procedures (MAP) specified in the contract/work directive, and all ECPs listed in the *(insert DMWR or NMWR)* must be applied during the overhaul of the item. Refer to DA PAM 25-30 and DA PAM 750-10 for all published MWOs."

B.5.2.21 Deviations and exceptions **(DMWR/NMWR only) <deviation>**. The following statement shall be included.

"**DEVIATIONS AND EXCEPTIONS**

Requests for deviations or exceptions to this (*insert Depot Maintenance Work Requirement (DMWR) or National Maintenance Work Requirement (NMWR)*) will be processed in accordance with ISO 9000 Series standards, or equivalent."

B.5.2.22 Mobilization requirements **(DMWR/NMWR only) <mobreq>**. The following statement shall be included.

"**MOBILIZATION REQUIREMENTS**

All requirements of this (*insert DMWR or NMWR*) will be exempted or revised in the event of mobilization. Only those procedures necessary to return the (*insert equipment name*) to a serviceable condition will be performed. The exemptions and revisions are explained in supporting information work package (*insert appropriate work package title*)."

B.5.2.23 Flight safety critical aircraft parts **(FSCAP) (aircraft only) <fscapreq>**. The following statement shall be included.

"**FLIGHT SAFETY CRITICAL AIRCRAFT PARTS (FSCAP)**

A flight safety critical aircraft part is defined as any part, assembly, or installation whose failure, malfunction, or absence could cause loss of aircraft, serious damage to aircraft, death of crewmembers, or serious injury to crewmembers.

A critical characteristic is defined as any feature throughout the life cycle of a FSCAP, such as dimension, tolerance, finish, material or assembly, manufacturing process, inspection process, operation, field maintenance requirement, depot overhaul requirement, or other feature that if nonconforming, missing, or degraded, could cause failure or malfunction of a FSCAP."

Source: https://assist.dla.mil -- Downloaded: 2016-12-05T17:12Z
Check the source to verify that this is the current version before use.

In addition, add the following statement.

"Throughout the maintenance tasks, 'FLIGHT SAFETY CRITICAL AIRCRAFT PARTS' alerts will precede the procedural step that includes a FSCAP, emphasizing that this part or parts require special handling during maintenance. Once the alert is displayed, applicable procedural steps will not be displayed until a manual acknowledgment of the FSCAP message is provided by the user".

B.5.2.24 Cost considerations **(DMWR/NMWR only) <cost>**. The following statement shall be included.

"**COST CONSIDERATIONS**

This work requirement shall be the basis for establishing the extent of overhaul while taking into consideration cost factors. A determination shall be made on all subassemblies/ assemblies to replace worn or damaged components which are available in supply, if acquisition cost is less than the cost to repair and restore to the (*insert DMWR or NMWR*) standard. The cost to repair/restore any individual item with an established Maintenance Expenditure Limit (MEL) to the (*insert DMWR or NMWR*) standard shall not exceed the MEL, unless a waiver has been approved in accordance with AMC-R 750-51. This requirement does not apply to items exempted from MEL in accordance with AMC-R 750-51."

B.5.2.25 Supporting information for repair parts, special tools, TMDE, and support equipment **(Field level only) <supdata>**. When applicable, the following information shall include a reference to the common tools and equipment; special tools, TMDE, and support equipment; and the repair parts as shown below. The information in B.5.2.25.1 through B.5.2.25.3 applies only to field level maintenance.

B.5.2.25.1 Common tools and equipment. The following statement shall be included:

"**COMMON TOOLS AND EQUIPMENT**

For authorized common tools and equipment, refer to the Modified Table of Organization and Equipment (MTOE), CTA 50-970, Expendable/Durable Items (Except: Medical, Class V, Repair Parts, and Heraldic Items), CTA 50-909, Field and Garrison Furnishings and Equipment or CTA 8-100, Army Medical Department Expendable/Durable Items, as applicable to your unit."

B.5.2.25.2 Special tools, TMDE, and support equipment. A reference to the Parts Information and MAC shall be included. When no special tools or equipment are required, it shall be so stated. If tools are to be fabricated, reference to the Illustrated List of Manufactured Items work package shall be made.

B.5.2.25.3 Repair parts. The following statement shall be included.

"Repair parts are listed and illustrated in the parts information work package (*insert appropriate work package title)* of this IETM."

Source: https://assist.dla.mil -- Downloaded: 2016-12-05T17:12Z
Check the source to verify that this is the current version before use.

B.5.2.26 Copyright credit line <**copyrt**>. TMs should not contain copyrighted material except as specified in the Federal Acquisition Regulations (FAR) and Defense Federal Acquisition Regulation (DFAR) Supplement. When copyrighted material is included in a TM, the TM author must obtain prior written permission from the copyright owner or authorized agent for its use. The written permission must contain a statement declaring whether or not a copyright credit line is required. When a copyright credit line is required, the information shall appear as the last paragraph of the general information work package.

B.5.2.26.1 Proprietary names. Trade names, copyrighted names, or other proprietary names applying exclusively to the product of one company shall not be used unless the items cannot be adequately described because of the technical involvement, construction, or composition. In such instances, lone, and if possible, several commercial products shall be listed, followed by the words "or equal." The same shall apply to manufacturers' part numbers or drawing numbers for minor parts where it is impractical to specify the exact requirements. If possible, the particular characteristics required for the "or equal" products shall be defined.

B.5.2.26.2 Advertising. Publication material shall not contain advertising matter.

B.5.3 Equipment description and data work package <**descwp**>. This work package shall contain the descriptive data requirements listed in B.5.3.1 through B.5.3.6, as applicable. If the descriptive data is provided in a separate operator's manual, a paragraph referencing the equipment description and data in the operator's manual shall suffice. Additional equipment description and data required for a higher maintenance level, but not included in the operator's manual, shall be included. This work package shall not contain any operator or maintenance procedures. Work package identification information is required for this work package (refer to 4.8.6.1). Initial setup information is not required for this work package.

B.5.3.1 Work package identification information <**wpidinfo**>. Work package identification information is required for this work package (refer to 4.8.6.1).

B.5.3.2 Initial setup information <**wpinfo**>. Initial setup information is not required for this work package.

B.5.3.3 Equipment characteristics, capabilities, and features <**eqpinfo**>. An overall description of the equipment <**eqpdesc**> shall be prepared, including general capabilities, special features, and other like information (e.g., applications, limitations) which will be helpful in the operation and maintenance of the equipment. Unless otherwise directed, the information may be in narrative or tabular format.

a. The equipment type shall be stated, as shall the following equipment features: portability or mobility, operational and special environment, and remote control.
b. Components and their functions shall not be described unless essential to continuity. For functional data, reference shall be made to theory of operation.
c. When equipment covered varies in scope and application or has several applications within an end item, a brief explanation of the multiple usage and a simple diagram showing all aspects of a typical application shall be prepared.
d. For **ammunition TMs**, packing and packaging information shall be prepared, including number of rounds per pack.

Source: https://assist.dla.mil -- Downloaded: 2016-12-05T17:12Z
Check the source to verify that this is the current version before use.

B.5.3.4 Location and description of major components (Except Conventional Ammunition and Chemical Manuals) **<locdesc>**. Equipment location information shall be prepared including external and internal views of the equipment used to show general features and all major components. This information shall not duplicate information contained in the equipment data requirements and the equipment characteristics, capabilities, and features.

a. The equipment and weapon systems configuration shall be described as follows:
   (1) A description of system areas and compartments shall be prepared, and the system equipment and components contained in the areas shall be identified. To identify and locate the listed system equipment the configuration description shall be supported by separate illustrations of each compartment and area. For **aircraft only**, a station diagram showing fuselage station, water line, and butt line, etc. shall be included (refer to FIGURE B-1).
   (2) The subsystems or equipment comprising the system shall be identified and described. Other equipment which is installed in the subject system compartments and areas need not be listed in the text or called out in the illustrations if they do not directly affect the operation or maintenance of the subject system. Descriptions of operator-attended equipment shall include general statements about the nature and purpose of the controls and indicators. The text shall be supported by illustrations.
   (3) Descriptions and illustrations of associated-system equipment shall be limited to the major units of that equipment. The descriptions shall be more concise than those of the subject system equipment; otherwise, the same requirements shall apply. In the descriptions, emphasis shall be placed on associated systems equipment that constitutes operational or functional interfaces with the subject system. Such units shall be included in the system illustrations.
b. Illustrate the use of the equipment. Only information pertaining to the user shall be prepared.
c. Location and contents of end item and major component identification plates shall be illustrated. Modification information, and warranty plates, stencils, or location of serial numbers shall be illustrated.

B.5.3.5 Differences between models **<eqpdiff>**. Significant differences affecting interchangeability shall be identified. Specifically, differences associated with equipment models or units of the same model shall be indicated that would affect operator or maintenance actions. These differences shall be related explicitly to equipment model, part number, or serial number ranges in such a manner that the TM user can identify the specific equipment configuration involved. When model differences exist but have no effect on operation or maintenance, this fact shall be stated.

B.5.3.6 Equipment data **<eqpdata>**.

a. Performance data shall be prepared, including numerical and other standard-related data applying to operational and maintenance functions. The equipment data shall summarize the specific capabilities and limitations of the equipment and other critical data needed by the TM user for maintenance of the equipment. Vehicle and cargo space dimensions and metric and other equivalents shall be included.

Source: https://assist.dla.mil -- Downloaded: 2016-12-05T17:12Z
Check the source to verify that this is the current version before use.

b. For systems, a list of the environmental control requirements, such as limited temperature, humidity, or other limited conditions shall be prepared. Reference shall be made to the work package(s) containing information on damage to be expected from exceeding these limits and procedures for minimizing the damage.

c. A summary shall be prepared that lists the effects of weather conditions on equipment affecting system capability or causing equipment damage. This summary shall include references to any special servicing procedures that must be accomplished because of climatic changes, such as adding antifreeze to coolants.

d. Instructions for the use, transportation, handling, storage, or disposal of such substances as fuels, toxic and hazardous substances, chemicals, ordnance, and munitions shall be prepared. These instructions shall meet the applicable requirements of the Federal Environmental Protection Standards (standards to be provided by the acquiring activity).

e. The energy efficiency rating shall be included for products that directly consume energy in normal operations and that commonly have a method of expressing energy efficiency.

B.5.4 Theory of operation work package **<thrywp>**. Theory of operation shall be prepared to provide the maintenance technician with adequate background information to support and perform maintenance tasks and troubleshooting on the weapon system, equipment, or components. DMWR/NMWR shall include this work package(s) as required by the acquiring activity. The amount of detail and complexity of the theory of operation presentation shall be in accordance with the Logistics Management Information (LMI) maintenance concept, the Maintenance Allocation Chart (MAC) or an approved maintenance plan. Theory of operation shall be provided as described in B.5.4.1 through B.5.4.3. This work package shall not contain any operator or maintenance procedures.

B.5.4.1 Work package identification information **<wpidinfo>**. Work package identification information is required for this work package (refer to 4.8.6.1).

B.5.4.2 Initial setup information **<wpinfo>**. Initial setup information is not required for this work package.

B.5.4.3 Theory presentation. Theory of operation shall consist of a functional narrative to explain the weapon system, equipment, and component operation (electrical/electronic, hydraulic, pneumatic, and mechanical). See MIL-HDBK-1222 for an example of theory of operation. Block diagrams, functional flow diagrams, schematics, and other illustrations shall be included to support the text. Basic theory, normally found in textbooks, shall not be included. If the TM covers more than one model of equipment, or more than one configuration of weapon system, differences shall be explained or separate work packages may be used. Additional theory requirements are outlined below.

a. When necessary, introductory general information **<intro>** may precede the theory of operation narrative.

b. For simple systems or equipment/components, all theory **<systhry>** may be included in a single work package.

Source: https://assist.dla.mil -- Downloaded: 2016-12-05T17:12Z
Check the source to verify that this is the current version before use.

c. If the relative complexity of the weapon system/equipment is such that it is reasonable to first present the theory of the end item as a unit and then present the theory of its major system, subsystems, and component, it shall be presented in a series of work packages. A separate theory of operation work package shall be developed for each aircraft system. The work package may contain the functional operation for the system **<systhry>**, its subsystems **<ssysthry>** and its components (line replacement units (LRUs) **<lruthry>** and shop replacement units (SRUs)) **<sruthry>**, or when necessary for usability or clarity, subsystem and component theory of operation may be provided in separate work packages. Subsystem component theory of operation may be included in either the subsystem theory of operation work package or in a separate component theory of operation work package. Detailed component functional operation, common circuitry and wiring diagrams shall not be included unless necessary to understand system/subsystem function.

d. Theory narrative shall be to a depth necessary to support the technician in fault isolation to the level directed by the LMI and/or maintenance plan. The operation of the weapon system and related systems/components shall be presented in a logical flow. Significant input, output, and control signals, supply voltages and power supply output voltages shall be identified. If the equipment operates in more than one mode, each mode shall be explained and supported by functional block diagrams. Theory of operation shall describe detailed circuitry of all repairable components as directed by the LMI/maintenance plan. Internal circuits, their relationship to each other, input and output signals, waveforms and time-phase relationship to significant waveforms shall be included when required to understand detailed equipment operation. Theory shall not be prepared for nonrepairable, throw-away components.

B.5.5 General information work package **(Preventive Maintenance Services Manual or Preventive Maintenance Daily Manual only) <pms-ginfowp>**. This work package shall be prepared for Preventive Maintenance Services manuals and Preventive Maintenance Daily manuals and shall contain the content requirements provided in B.5.5.1 and B.5.5.4. The italicized text shall be deleted, and as applicable, replaced with the appropriate information.

B.5.5.1 Work package identification information **<wpidinfo>**. Work package identification information is required for this work package (refer to 4.8.6.1).

B.5.5.2 Initial setup information **<wpinfo>**. Initial setup information is not required for this work package.

B.5.5.3 Maintenance activities **<scope>**. The following text within quotes shall be included verbatim. Italicized text shall be replaced with the appropriate information.

"**SCOPE**

The Preventive Maintenance Services Inspection Checklist work package contains complete requirements for a (*insert specific inspection interval(s) here*) for the (*insert specific equipment here*). It does not contain instructions for repair, adjustment, or other means of rectifying conditions, nor does it contain instruction for troubleshooting to find causes for malfunctioning. Specific tolerances, limits, etc., can be found in the applicable maintenance manuals. Use of the alphabetical index in the applicable manuals will facilitate locating the required information."

Source: https://assist.dla.mil -- Downloaded: 2016-12-05T17:12Z
Check the source to verify that this is the current version before use.

B.5.5.4 General information **<geninfo>**. The following text within quotes shall be included verbatim. Italicized text shall be replaced with the appropriate information.

"**INSPECTION REQUIREMENTS**.

The inspection requirements contained in this work package are stated in such a manner as to establish when certain equipment is to be inspected and what conditions are desired/undesired. Compliance with the provisions outlined herein is required in order to ensure that latent defects are discovered and corrected before malfunctioning or serious trouble results. Inspection requirements are arranged, as nearly as possible, according to the manner in which they will be performed. The requirements are divided into groups and listed under area heading in the "How To Use This Manual" portion of this manual and Figure (*insert figure number here*).

INSPECTION INTERVALS

The *(insert inspection interval here)* inspection will be performed every (*insert the specific aircraft hours here*) flight hours or (*insert specific calendar days here*) days, whichever comes first. The (*insert the specific aircraft hours here*) will not be extended except in actual operational emergencies. In no case shall the aircraft intentionally be scheduled for a flight that will cause it to exceed the (*insert the specific aircraft hours here*) inspection due time. The (*insert specific calendar days here*) interval is a full (*insert the number of weeks here if applicable*) weeks. That is, if a (*insert specific calendar days here*) is done on Tuesday, the next (*insert specific calendar days here*) days inspection will not be due *until (insert the specific day here) (insert the specific number of weeks here*) later.

SPECIFIC NON-INSTALLED EQUIPMENT ON AIRCRAFT

This work package may contain inspection requirements applicable to specific equipment not installed on your aircraft. Those requirements should be disregarded.

DA FORMS

DA Form 2408-13-1 will be used to record all deficiencies or shortcomings discovered during the (*insert specific inspection interval here*). Use DA PAM 738-751 to properly complete this form.

Source: https://assist.dla.mil -- Downloaded: 2016-12-05T17:12Z
Check the source to verify that this is the current version before use.

SPECIAL INSTRUCTIONS

The (*insert inspection interval here*) will not be exceeded except in actual operational emergencies. When operational emergencies require aircraft operation beyond the normal inspection due-time, a circled red X status symbol and an appropriate statement (to include authority) must be entered in Part I, Fault Information block of DA Form 2408-13-1 (Aircraft Inspection and Maintenance Record) until such time as the inspection is complete. When inspections are delayed to meet emergency requirements, commanders will assure that the aircraft status symbol reverts to a red "X" and that delayed inspections are accomplished immediately upon termination of the actual emergency. When unusual local conditions of environment, utilization, mission, experience of flight crew and maintenance personnel, periods of inactivity, etc., are encountered, the maintenance officer will, at his discretion, increase the scope and/or frequency of maintenance of inspections as necessary to ensure safe flight.

Aircraft that are down, Not Mission Capable due to Supply (NCMS), or Not Mission Capable due to Maintenance (NMCM), are deferred from the (*insert inspection interval here*) inspection until the aircraft is return to flyable status. When the NMCS and/or NMCM condition is cleared from the aircraft that has been deferred, the (*insert inspection interval here*) must be done before the first flight. It is the maintenance office's responsibility to determine those inspections necessary during NMCS and/or NMCM to preserve the aircraft. Maintenance situations and climates vary too much to permit a definition of an adequate inspection of the aircraft in NMCS and/or NMCM status.

Accessing procedures and detailed inspection criteria can be found in the applicable maintenance manuals. Use the alphabetical index in the applicable manuals. Unless otherwise directed, removed panels and opened doors will be reinstalled and closed upon completion of each area inspection.

The total man-hour (M/H) requirements for a complete (*insert inspection interval here*) inspection is (*insert total number of man-hours here*) M/H.

REPORTING ERRORS AND RECOMMENDING IMPROVEMENTS

You can help improve this IETM. If you find any mistakes or if you know of a way to improve the procedures, please let us know. Mail the DA Form 2028 directly to: (*insert mailing address*). You may also send in your recommended changes via electronic mail, by fax, or by the World Wide Web. Our fax number is (*insert DSN and commercial number of proponent)*. Our e-mail address is (*insert e-mail address of proponent*). Instructions for sending an electronic DA Form 2028 may be found at the back of the applicable technical manual. For World Wide Web use https://amcom2028.redstone.army.mil. A reply will be furnished to you.

Source: https://assist.dla.mil -- Downloaded: 2016-12-05T17:12Z
Check the source to verify that this is the current version before use.

OZONE DEPLETING CHEMICALS

(*insert appropriate ODC statement here*)

HAZARDOUS MATERIALS (HAZMAT)

(*insert appropriate HAZMAT statement here*)

INSPECTION AREAS

Inspection areas are shown in (*enter WP(s) title and figure number*)."

B.5.6 General information work package (Phased Maintenance Inspection Manual Only) **<pm-ginfowp>**. This work package shall be prepared for Preventive Maintenance Inspection manuals and shall contain the content requirements provided in B.5.6.1 through B.5.6.3.

B.5.6.1 Work package identification information **<wpidinfo>**. Work package identification information is required for this work package (refer to 4.8.6.1).

B.5.6.2 Initial setup information **<wpinfo>**. Initial setup information is not required for this work package.

B.5.6.3 General information **<geninfo>**. The information in 5.6.3.1 and 5.6.3.2 below shall be included.

B.5.6.3.1 Phased schedule. One of the following shall be included verbatim as applicable:

"**PHASED SCHEDULE**

The phased maintenance inspection checklist contains requirements for inspection of the (*insert aircraft model*) aircraft on a phased schedule having a (*insert flight hour cycle*) hour (flight hours) cycle with (insert phase hours) hour phases. Each requirement included herein is designated for accomplishment at least once, but not more than (*insert number of phases*) times during the (*insert flight hour cycle*) hour cycle."

OR

"**PROGRESSIVE PHASED MAINTENANCE SCHEDULE**

The progressive phased maintenance inspection checklist contains requirements for inspection of the (*insert aircraft model*) aircraft on a phased schedule of (*insert inspection interval*) hours intervals."

Source: https://assist.dla.mil -- Downloaded: 2016-12-05T17:12Z
Check the source to verify that this is the current version before use.

B.5.6.3.2 Additional general information. The following additional text shall be included verbatim:

"EXCEEDING THE PHASED SCHEDULE

The phased maintenance inspection intervals designated are the maximum and shall not be exceeded except in actual operational emergencies as explained herein. It is the Commander's responsibility to determine (on an individual aircraft basis) when inspection intervals may be exceeded. For this purpose, operational emergencies are conditions of combat, or conditions of disaster which necessitate flight to evacuate aircraft or personnel. When aircraft are operated beyond the normal inspection due time because of such emergency situations, a circled red X status symbol and an appropriate statement (to include authority) must be entered on the appropriate aircraft form as specified in DA PAM 738-751 until such time as the inspection is complete. When inspections are delayed to meet emergency requirements, Commanders will assure that the aircraft status symbol reverts to a red X and that delayed inspections are accomplished immediately upon termination of the actual emergency. When unusual local conditions (utilization, type of mission, personnel, periods of inactivity, environmental conditions, etc.) dictate, it is the prerogative and responsibility of the Maintenance Officer to increase the scope and/or frequency of maintenance or inspection as necessary to ensure safe operation (TM 1-1500-328-23).

MAINTENANCE ACTIVITIES

The inspections prescribed by this checklist will be accomplished at specified phases by Aviation Maintenance Company (AMC) activities with assistance of Aviation Support Battalion (ASB) and Depot Maintenance activities when required. The inspection of the part/component is visual unless stated otherwise.

LIMITATIONS

The checklist does not contain instructions for repair, adjustment or other means of rectifying conditions. Neither does it contain special tolerances, limits or instructions for special troubleshooting to find causes for malfunctions. Such data will be obtained from the latest issue of the aircraft (*insert applicable aircraft technical manuals*) series Maintenance Manuals.

CHANGEOVER TO THE PHASED MAINTENANCE SYSTEM

Changeover shall be accomplished in accordance with instructions provided in (*insert appropriate TM/TB*) entitled, "*Insert title*". The requirements of this TM/TB must be accomplished prior to implementation of Phase 1 inspection requirements specified in this checklist.

PRE-INSPECTION MAINTENANCE TEST FLIGHT (MTF)

A pre-inspection MTF to duplicate non-hazardous equipment problems, determine unsatisfactory conditions, determine equipment operation problems, etc., is recommended prior to start of aircraft disassembly for phased maintenance inspection. The decision to perform the pre-inspection MTF, however, shall be the responsibility of the unit Maintenance Officer.

Source: https://assist.dla.mil -- Downloaded: 2016-12-05T17:12Z
Check the source to verify that this is the current version before use.

APPENDIX B

SPECIAL INSPECTIONS, CALENDAR INSPECTIONS AND LUBRICATION REQUIREMENTS

Special inspections, calendar inspections and lubrication requirements contained in (*insert applicable aircraft technical manual*) and those listed on the aircraft's DA Form 2408-18 shall be reviewed and accomplished in accordance with the "inspection due" requirements specified in those documents.

TIME BETWEEN OVERHAUL (TBO) AND RETIREMENT LIFE ITEMS CHECK

Prior to start of the applicable phased maintenance inspection, a check will be made of components and their remaining operating hours prior to removal. The latest issue of the aircraft's (*insert applicable aircraft technical manual*) and DA Form 2408-16 shall be referred to for a complete listing of components and their TBO and retirement life.

USING THE PHASED INSPECTION CHECKLIST

1. A new checklist shall be used each time phased maintenance is due on the aircraft. This checklist is arranged such that it can be separated by area and distributed to the maintenance crew. For use of the checklist refer to DA PAM 738-751.
   a. Space is provided on each checklist form for entering the following data:
      (1) The type of the maintenance inspection phase being performed or the phase type being performed (i.e., phase, desert, reset).
      (2) Aircraft serial number.
      (3) Date of the inspection.
      (4) Total hours. (Block provided for local use.)
   b. For each inspection item a column is provided for entering the following data:
      (1) Status of the aircraft as the result of the inspection requirement.
      (2) Aircraft fault and/or remarks indicated by the inspection requirement.
      (3) Action taken to correct the fault.
      (4) Personnel Identifier (PID) of person performing the corrective action.

PHASE NUMBERS/TYPES

In the column headed 'Inspect Phase Type.' and adjacent to the sequence number of each inspection requirement, there will appear "*Insert appropriate codes/explanations*".

The word "ALL" indicates that the inspection requirement shall be accomplished at each phase. A number represents the phase number or flight hours (time between phases) at which that inspection requirement is to be accomplished. When more than one number or flight hour is listed the inspection is required at each interval given.

Source: https://assist.dla.mil -- Downloaded: 2016-12-05T17:12Z
Check the source to verify that this is the current version before use.

APPENDIX B

STATUS SYMBOLS

The status column will be used in accordance with DA PAM 738-751.

FAULTS AND/OR REMARKS

Fault entries in the Faults and/or Remarks column will be in accordance with DA PAM 738-751.

ACTION TAKEN

a. Entries in the Action Taken column will be in accordance with 738-751
b. If no fault was found, an appropriate remark shall be entered in the column to indicate that the inspection was accomplished, i.e., 'Inspected and found OK'. If an inspection item is not applicable to the particular inspection or to specific equipment installed on an individual aircraft, a 'N/A' entry is required.

PERSONNEL IDENTIFIER (PID)

The PID of the person correcting the indicated fault shall be entered in accordance with DA PAM 738-751.

FINAL RECORDS CHECK

After all corrective actions have been completed and following completion of the phased inspection, the Technical Inspector or designated supervisor shall verify that all applicable forms and records have been properly updated. All uncorrected faults shall be entered on applicable aircraft forms in accordance with DA PAM 738-751. A Final Records Checklist shall be used is to ensure forms and records have been inspected for completeness and accuracy prior to release of the aircraft from the phased maintenance inspection. The PID of the inspector verifying the final records check shall be entered adjacent to the indicated form or record on the Final Records Checklist. The PID entered shall be registered on the Signature Sheet adjacent to that person's signature.

SIGNATURE SHEET

All personnel performing inspection and/or maintenance tasks shall place their signatures and PID on the signature sheet. The purpose of the signature sheet is to provide a correlation between PID entered on the individual checklist sheets and the actual names of the personnel accomplishing these tasks.

MAINTENANCE OPERATIONAL CHECKS

After the completion of any required corrective actions to any of the components of a functional system of the aircraft, maintenance operational checks (MOC) shall be performed on that system to determine the effectiveness of the maintenance actions performed and to verify the proper operation of that system. These MOC shall be performed in accordance with TM 1-1500-328-23. DA Form 2408-13-1 may be used to record and sign off the Maintenance Operational Checks performed.

Source: https://assist.dla.mil -- Downloaded: 2016-12-05T17:12Z
Check the source to verify that this is the current version before use.

MAINTENANCE TEST FLIGHT

When all required inspections have been accomplished and initialed in accordance with the above procedure, the MTF shall be performed in accordance with the requirements of (*insert applicable aircraft technical manuals*) and TM 1-1500-328-23 using the MTF form in the MTF technical manual.

CHECKLIST DISTRIBUTION

The completion of each phased maintenance inspection shall be recorded on applicable forms as prescribed by DA PAM 738-751. The signed checklist, together with all forms prescribed by DA PAM 738-751, will be filed. Disposition will be in accordance with DA PAM 738-751 or specific instructions in the applicable aircraft technical manual.

INSPECTION AREAS

(*Insert WP title and figure number*) reflects the inspection areas of the (*insert applicable aircraft model*) aircraft. Those areas are titled as shown. Figure (*insert number*) shows the location of access doors and panels which require removal at various phased maintenance inspections

REPORTING ERRORS AND RECOMMENDING IMMPROVEMENTS.

(insert appropriate reporting errors statement here (see para B.5.5.4))”

B.6 NOTES.

The notes in section 6 apply to this appendix.

Source: https://assist.dla.mil -- Downloaded: 2016-12-05T17:12Z
Check the source to verify that this is the current version before use.

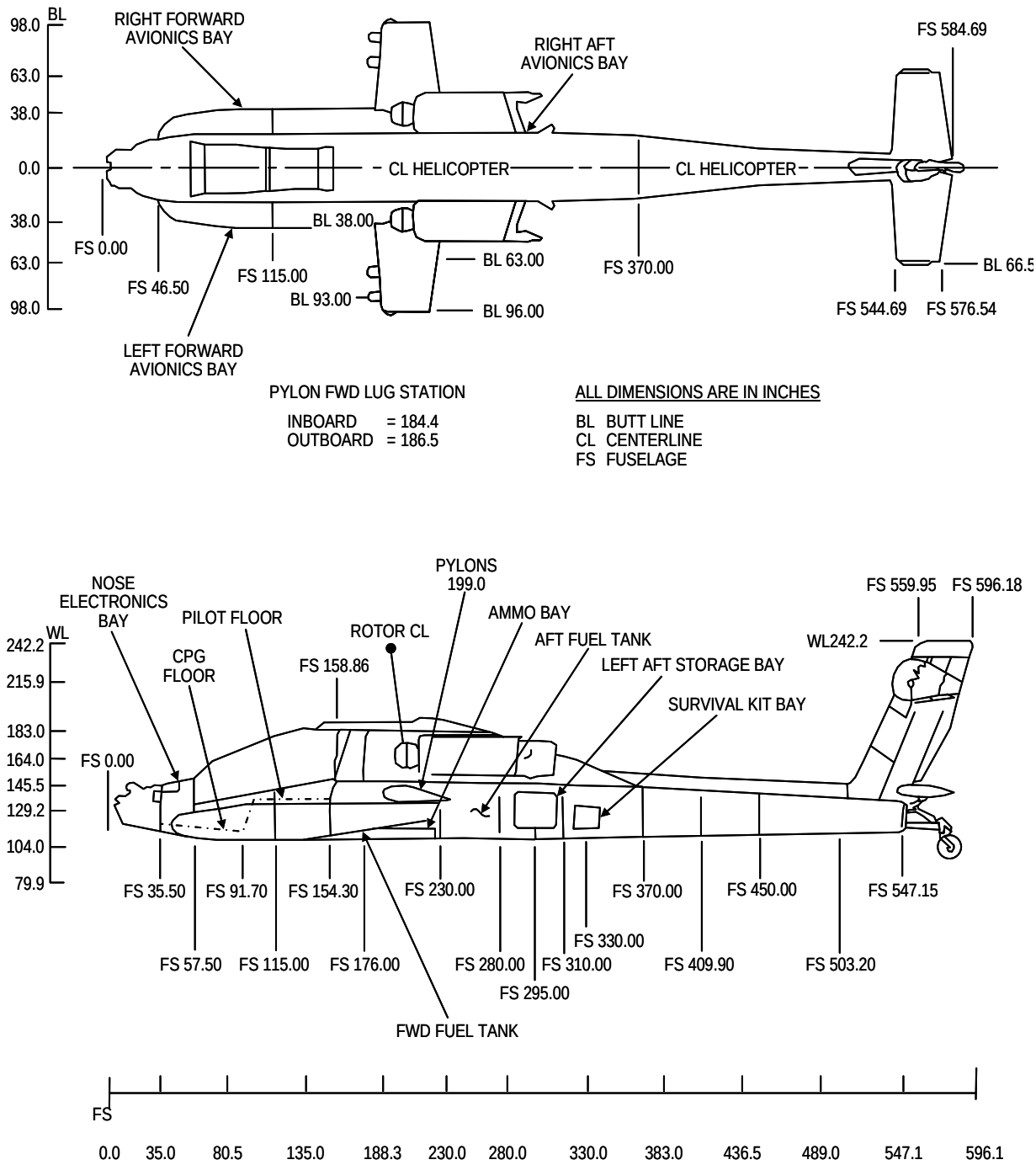

FIGURE B-1. Example of a station diagram.

Source: https://assist.dla.mil -- Downloaded: 2016-12-05T17:12Z
Check the source to verify that this is the current version before use.

APPENDIX C

OPERATOR INSTRUCTIONS

C.1 SCOPE.

C.1.1 Scope. This appendix establishes the technical content requirements for the preparation of operator instructions for major weapon systems, and their related systems, subsystems, equipment, weapons replacement assemblies (WRAs), and shop replacement assemblies (SRAs). This Appendix is a mandatory part of this standard. The information contained herein is intended for compliance. The requirements are applicable for all maintenance levels through overhaul (depot) including Depot Maintenance Work Requirements (DMWRs) and National Maintenance Work Requirements (NMWRs).

C.2 APPLICABLE DOCUMENTS.

The applicable documents in section 2 apply to this appendix.

C.3 DEFINITIONS.

The definitions in section 3 apply to this appendix.

C.4 GENERAL REQUIREMENTS.

C.4.1 General. Operator instructions shall be prepared for weapon systems, major equipment, components, and applicable support and interface equipment. Operating instructions shall describe the operation authorized for the operator/crew. Procedures and supporting illustrations shall be prepared so that personnel can prepare the weapon system/equipment for operation, identify and locate operational controls and indicators, and operate the weapon system/equipment safely and efficiently in both normal and emergency conditions. Unless otherwise specified, an operator instructions chapter shall be used for operator data. Multiple chapters should only be used for equipment that is very complex or that has multiple configurations.

C.4.2 Maintenance level applicability. Requirements contained in this appendix are applicable to all maintenance levels unless specifically noted in bold and in parentheses (i.e., **Field**). The labeled requirements shall be applicable to all TMs containing that maintenance level. An explanation of all applicable Department of Army maintenance levels is provided in section 3.

C.4.3 Preparation of digital data for electronic delivery. Technical manual data prepared and delivered digitally in accordance with this standard shall be Extensible Markup Language (XML) tagged using the Document Type Definition (DTD) and the XML Stylesheet Language (XSL), or style sheets in accordance with MIL-STD-2361. Refer to 4.6 for information on obtaining or accessing the DTD and style sheets. XML tags used in the modular DTD are noted throughout the text of this standard in bracketed, bold characters (i.e., **<opim>**) as a convenience for the TM author and to ensure that the tags are used correctly when developing a document instance.

Source: https://assist.dla.mil -- Downloaded: 2016-12-05T17:12Z
Check the source to verify that this is the current version before use.

C.4.4 Use of the DTD/XSLs. The DTD referenced in this standard interpret the technical content and structure for the functional requirements contained in this appendix and are mandatory for use. Development of IETMs is accomplished through the use of this standard, the DTD, and the guidance contained in MIL-HDBK-1222. The guidance contained in MIL-HDBK-1222 applies unless they conflict with the requirements in this appendix. The requirements in this appendix take precedence over the guidance contained in MIL-HDBK-1222. A style sheet is used to interpret the style and format for screen display. For additional information on DTD and specific XSLs or style sheets, refer to MIL-STD-2361.

C.4.5 Content structure and format. The examples provided in this standard are an accurate representation of the content structure and format requirements contained in this appendix and shall be followed to permit the effective use of the DTD for Operation Instructions.

C.4.6 Style and format. This standard provides style and format requirements for the preparation of the technical content requirements described in this appendix. These requirements are considered mandatory and are intended for compliance.

C.4.7 IETM functionality. The specific level of functionality and user interaction to be provided in the IETMs shall be in accordance with the functionality matrix contained in Appendix A.

C.4.8 Work package development. Technical manual data developed in accordance with this appendix shall be divided into individual, stand alone units of information called work packages. A work package shall consist of descriptive, operational, maintenance, troubleshooting, support, or parts information for the weapon system or equipment.

C.4.9 Safety devices and interlocks. Information shall be prepared pertaining to the purpose and location of all safety devices and interlocks in conjunction with the pertinent procedures.

C.4.10 Electrostatic discharge (ESD) sensitive parts. If the equipment contains ESD sensitive parts, components, or circuits, cautions, and ESD labels shall be incorporated into the applicable tasks and procedures to ensure ESD sensitive parts are not damaged or degraded during maintenance and operation. Refer to 4.8.18 for requirements on labeling with ESD. Actions which could damage ESD sensitive parts, but which are not directly related to handling or operation of ESD sensitive parts, shall not be annotated with the ESD acronym, but shall be preceded by a caution statement.

C.4.11 Nuclear hardness. If the weapon system/equipment has nuclear survivability requirements (for example, over pressure and burst, thermal radiation, electromagnetic pulse, or transient radiation effects on electronics), cautions and Hardness-Critical Processes (HCP) labels shall be incorporated into the applicable tasks and procedures to ensure the hardness of the equipment is not degraded during handling or operation. Refer to 4.8.17 for requirements on labeling with HCP. Actions which could degrade hardness, but which are not directly involved in establishing nuclear hardness, shall not be annotated with the acronym, but shall be preceded by a caution statement.

Source: https://assist.dla.mil -- Downloaded: 2016-12-05T17:12Z
Check the source to verify that this is the current version before use.

C.4.12 Selective application and tailoring. This standard contains some requirements that may not be applicable to the preparation of all technical manuals. Selective application and tailoring of requirements contained in this appendix are the responsibility of the acquiring activity and shall be accomplished using Appendix A, IETM Functionality And Data Display Requirements And Content Selection Matrixes. The applicability of some requirements is also designated by one of the following statements: unless specified otherwise by the acquiring activity; as/when specified by the acquiring activity; or when specified by the acquiring activity.

C.5 DETAILED REQUIREMENTS.

C.5.1 Preparation of operator instructions. Operator instructions shall be prepared and subdivided into individual work packages that provide the operator of the weapon system/equipment with descriptions and use of controls and indicators and operation of the weapon system/equipment under usual, unusual and emergency conditions. Weapon system and equipment operator data shall be developed in narrative or tabular form, or by whatever method is most simple or effective to convey the specific TM application.

C.5.2 Operator instructions work packages.

C.5.2.1 Work package content. Work packages shall include WP identification information, initial setup information, and all required operator instruction information. When initial setup information differs for specific operator instructions, additional work packages shall be developed. Work packages shall stand-alone and contain complete start-to-finish operator procedures. The words "**END OF WORK PACKAGE**" shall be placed below the last data item (i.e., text, illustration, etc.) of the work package. The operator instructions work packages described in C.5.2.2 shall be prepared, as applicable. See MIL-HDBK-1222 for examples of work package identification information format.

C.5.2.2 Types of operator instructions work packages. The following types of operator instructions work packages shall be developed, as applicable. Note however, in cases where operating instructions are divided by crew station assignment (or auxiliary equipment), work packages shall be developed to support each crew-served station. Refer to MIL-HBK-1222 for typical examples of operating instructions work packages.

a. Description and use of controls and indicators work package **<ctrlindwp>.**
b. Operation under usual conditions work package(s) **<opusualwp>.**
c. Operation under unusual conditions work package(s) **<opunuwp>**.
d. Emergency work package <**emergencywp**>.
e. Stowage and decal/data plate guide work package **<stowagewp>**.
f. On-vehicle equipment loading plan work package **<eqploadwp>.**

C.5.2.3 Description and use of controls and indicators work package **<ctrlindwp>**. Information shall be prepared for the description and use of all system or equipment controls and indicators. A description and use of controls and indicators shall be prepared for each equipment, assembly, or control panel having controls and indicators. Controls and indicators shall be described using one of the two following options (see C.5.2.3.3 or C.5.2.3.4) and shall be used through out the work package.

Source: https://assist.dla.mil -- Downloaded: 2016-12-05T17:12Z
Check the source to verify that this is the current version before use.

C.5.2.3.1 Work package identification information **<wpidinfo>**. Work package identification information is required for this work package (refer to 4.8.6.1).

C.5.2.3.2 Initial setup information **<wpinfo>**. Initial setup information is not required for this work package.

C.5.2.3.3 Controls and indicators description tabular option. This option shall describe each control and indicator in a tabular format. See MIL-HDBK-1222 for example of controls and indicators. The work package shall start with a short introduction <**intro**> that identifies the basic system, area, or other breakdown. The introduction shall be followed by one or more controls and indicators (**standard information**) **<ctrlindtab>** with an associated illustration <**figure**> for each control and indicator. The number of controls and indicators standard information tables required is dependent on several factors. These factors include but are not limited to system complexity, different users (crew members/stations) or configuration differences. For each control and indicator, the following entries shall be provided.

a. An index number **<key>** is used on the illustration to locate and identify the control or indicator on the illustration.
b. The name (nomenclature) **<ctrlind>** of the control or indicator as it appears on the equipment. Controls and indicators that are not labeled, such as the accelerator or brake pedals, shall be identified. Each control and indicator shall be clearly labeled as it appears on the equipment.
c. The function of the control or indicator **<function>** shall be described.

C.5.2.3.4 Controls and indicators description narrative option. This option provides a narrative approach to describe each control and indicator. This textual approach shall begin with a figure <**figure**> illustrating the control or indicator that is being described. The figure shall be followed by paragraphs **<ctrlinddesc>** describing each control or indicator shown in the figure. The narrative option for controls and indicators shall contain the same items as given in paragraph C.5.2.3.3a-c above. More than one figure and controls and indicators description may be used to improve user understanding.

C.5.2.4 Operation under usual conditions work package **<opusualwp>**. Instructions to operate the weapon system/equipment and auxiliary equipment in all modes of operation shall be prepared. Any combination of control settings that will create a hazard to personnel or cause damage to equipment shall be preceded by a warning or caution. Instructions to ensure proper grounding of equipment shall be prepared. The operational tasks **<opertsk>** described in C.5.2.4.1 through C.5.2.4.10 shall be included, as applicable.

C.5.2.4.1 Work package identification information **<wpidinfo>**. Work package identification information is required for this work package (refer to 4.8.6.1).

C.5.2.4.2 Initial setup information **<wpinfo>**. Initial setup information is required for this work package (refer to 4.8.6.1.1).

C.5.2.4.3 Security measures for electronic data **<secref>**. Instructions for handling, loading, purging, overwriting, or unloading classified electronic data under usual conditions. These instructions shall be developed when the systems are classified or have non-volatile on-board memory that requires to be cleared prior to transportation or other action that allows the data to be accessed by unauthorized personnel. Instructions shall meet the requirements of current regulations as they pertain to automation security.

Source: https://assist.dla.mil -- Downloaded: 2016-12-05T17:12Z
Check the source to verify that this is the current version before use.

C.5.2.4.4 Siting requirements <**site**>. Siting instructions peculiar to the equipment shall be prepared. Operational features shall be considered, such as the following.

a. Location.
b. Proximity to power sources.
c. Effective ranges.
d. Terrain requirements to avoid screening reflections, ground clutter, and other poor operational conditions due to terrain.
e. Technical requirements.
f. Shelter locations.
g. Compensating for adverse siting conditions.
h. Orientation to a baseline during siting when the equipment contains large components, such as towers and antennas.
i. Mobile equipment oriented during installation.

C.5.2.4.5 Shelter requirements <**shelter**>. For equipment normally housed in a permanent or semi-permanent shelter (other than a military truck, van, or transportable shelter) during use, the following information shall be prepared.

a. Amount of floor, wall, and height space required.
b. A plan for a typical layout.
c. Required weight capacity of the building floor.
d. Dimensions required for installed equipment.
e. Total weight that the floor must support and the area in square feet over which the total weight will be distributed.
f. Environmental conditions (e.g., venting).
g. Power requirements.
h. Unusual requirements specific to equipment, such as air-conditioning.
i. Architectural and engineering data on beam sizes, lengths, bending moments, and required supports shall not be included.

C.5.2.4.6 Assembly and preparation for use <**prepforuse**>. Procedures shall be prepared for unpacking, assembly, and installation. When the equipment is shipped or delivered in specially designed containers, unpacking instructions shall be prepared. If the containers are to be used again, kept for future use, turned in to supply, or if any special disposition is required, the necessary procedures shall be prepared. Assembly and installation procedures shall be prepared when needed. These instructions shall be supported by illustrations. As applicable, power requirements, connections, and initial control settings needed for installation purposes shall be included.

C.5.2.4.7 Initial adjustments, before use, and self-test <**initial**>. Procedures shall be prepared for any routine checks, self-test, or adjustments that the operator must make before putting the equipment in operation is required.

Source: https://assist.dla.mil -- Downloaded: 2016-12-05T17:12Z
Check the source to verify that this is the current version before use.

C.5.2.4.8 Operating procedures **<oper>**. The following operating instructions shall be prepared, as applicable.

a. All steps necessary to bring the equipment from OFF through STANDBY condition to full operation, including all necessary warnings and cautions.

b. Procedures for each mode of operation, e.g., manual, automatic, local, remote, etc. The use and relative advantage of each mode shall also be described.

c. Description of the equipment anti-jamming and interference reduction features, the advantage of each feature, and the operating procedures to be followed. Supporting illustrations (such as indicator displays, waveforms, etc.) shall be included which provide typical observations of jamming and interference for evaluation by the operator.

d. Operator turn-off procedures, including all steps necessary to bring the equipment from full operation through STANDBY to OFF condition.

e. Operating instructions for misfire, hangfire, and other procedures applicable to ammunition.

f. Operating procedures explaining how the equipment is operated in conjunction with auxiliary equipment or how it operates when integrated with other equipment.

g. When specified by the acquiring activity, operating procedures containing the identification, loading, initializing and downloading of applicable operational and diagnostic software shall be included. Identification of the software shall include the purpose, configuration applicability and version information. Procedures that verify that the proper software has been loaded and is operating properly shall also be included. Examples of specific types of data that may be applicable to these work packages are:

   (1) Descriptions of screen data and interpretation of message formats.

   (2) Operator actions based on screen display.

   (3) Data entry by the Operator.

   (4) Saving or purging data.

   (5) Processing of messages.

   (6) Software transfer procedures.

   (7) Reviewing message and entry formats.

C.5.2.4.8.1 Operating procedure considerations. The following considerations should be taken into account when preparing operating procedures.

a. Initial safety requirements (actions, inspections, and emergency turn-off procedures).

b. If a particular operating procedure or step is assigned to a specific crew-served position (e.g., gunner), the assignment must be indicated.

c. Connection of any accessory equipment not permanently connected.

d. Instructions for obtaining or confirming the presence of all critical inputs such as power, coolant, air, signal, air-conditioning, etc. Specific values for critical inputs (power, coolant, air, etc.) shall also be included.

e. Procedures for setting controls and making adjustments which must be accomplished by the operator prior to equipment turn-on.

Source: https://assist.dla.mil -- Downloaded: 2016-12-05T17:12Z
Check the source to verify that this is the current version before use.

f. Procedures for determining operational readiness and the acceptable indications expected from built-in indicators, such as meters, lamps, gages, displays, and recorder readouts.

g. Milestones in the operational status of the equipment, indicated by brief statements, such as "The generator is now in STANDBY."

h. Visual or audible observations which occur as a result of an operator action, such as boom lowering, sweep rotation, blower motor running, etc.

C.5.2.4.8.2 Decals and instruction plates **<instructplt>**. Decals and operating instruction plates located on the equipment, which are essential for operation, shall be clearly illustrated, so that all information is legible. Related warning and caution decals and plates shall be included. An illustration(s) shall be prepared to show the location of all applicable decals and plates.

C.5.2.4.9 Operating auxiliary equipment **<operaux>**. If applicable, procedures shall be prepared for putting the auxiliary equipment into operation, operating it, and putting it in standby or shutdown status. If these procedures are published in another TM covering the auxiliary equipment, reference shall be made to that TM in accordance with the requirements of 4.8.21.9.

C.5.2.4.10 Preparation for movement **<prepmove>**. Preparation for movement procedures shall be prepared if the equipment is designed for movement and it can be readied for movement by the operator. Procedures shall be prepared for actions such as disassembly, folding, and telescoping. Illustrations shall be prepared, as required, to support the text. This information shall not duplicate the "assembly and preparation for use" requirements contained in C.5.2.4.6.

C.5.2.5 Operation under unusual conditions work package **<opunuwp>**. Instructions shall be prepared for operation under unusual conditions. Preventive or protective measures to be taken beyond the operator's capabilities shall be identified. Instructions to ensure proper grounding of equipment shall be prepared, as applicable.

C.5.2.5.1 Work package identification information **<wpidinfo>**. Work package identification information is required for this work package (refer to 4.8.6.1).

C.5.2.5.2 Initial setup information **<wpinfo>**. Initial setup information is required for this work package (refer to 4.8.6.1.1).

C.5.2.5.3 Operations under unusual tasks **<opunutsk>**. The operational tasks **<opunutsk>** described in C.5.2.5.1 through C.5.2.6 shall be included, as applicable.

C.5.2.5.3.1 Security measures for electronic data **<secref>**. Instructions for handling, loading, purging, overwriting, or unloading classified electronic data under unusual conditions. These instructions shall be developed when the systems are classified or have non-volatile on-board memory that requires to be cleared prior to transportation or other action that allows the data to be accessed by unauthorized personnel. Instructions shall meet the requirements of current regulations as they pertain to automation security.

C.5.2.5.3.2 Unusual environment/weather **<unusualenv>**. Procedures shall be prepared for operation under conditions of extreme moist heat, extreme dry heat, extreme cold, salt air, sea spray, dust storms, sand storms, high altitudes, snow, mud, and other similar conditions. Ranges of environmental/weather operating conditions considered for the system addressed shall be defined.

Source: https://assist.dla.mil -- Downloaded: 2016-12-05T17:12Z
Check the source to verify that this is the current version before use.

C.5.2.5.3.3 Fording and swimming **<fording>**. If applicable, procedures for fording and swimming the equipment, shall be provided.

C.5.2.5.3.4 Interim Nuclear, Biological, and Chemical (NBC) decontamination procedures **<decon>**. As applicable and specified by the acquiring activity, interim general NBC decontamination procedures to be performed until NBC decontamination facilities are available shall be prepared. Other decontamination TMs shall be referenced only when necessary.

C.5.2.5.3.5 Jamming and Electronic Countermeasures (ECM) procedures **<ecm>**. As applicable, procedures shall be prepared for operation of the equipment in an ECM environment through transmitted and reflected deception signals and through transmitted and reflected jamming.

C.5.2.5.3.6 Degraded Operation procedures **<degraded>**. When operation of the equipment in a degraded condition is required, procedures shall be prepared for temporarily adapting the equipment and the operating procedures to meet the reduction of power, partial failure, failure of a portion of the equipment, or similar conditions.

C.5.2.6 Emergency work package **<emergencywp>**. As applicable, emergency procedures using, but not limited to, the operating and shutdown shall be prepared.

C.5.2.6.1 Work package identification information **<wpidinfo>**. Work package identification information is required for this work package (refer to 4.8.6.1).

C.5.2.6.2 Initial setup information **<wpinfo>**. Initial setup information is required for this work package (refer to 4.8.6.1.1).

C.5.2.6.3 Emergency operation **<emergency>**. Procedures covering operation of the equipment during emergency conditions (control failure, air failure, lube oil failure, loss of cooling water, etc.). Emergency operating instructions shall be included. Warning or caution to return the equipment to proper operation when the emergency is over shall also be included.

C.5.2.6.4 Emergency shutdown **<emergency>**. Procedures to turn the equipment off during an emergency (fire, water, smoke, hazard to personnel, loss of coolant, normal power, etc.).

C.5.2.7 Stowage and decal/data plate guide work package **<stowagewp>**. This work package shall be prepared as directed by the acquiring activity. The guide plan shall include information provided by the acquiring activity. The data described in C.5.2.7.1 through C.5.2.7.5 shall be included.

C.5.2.7.1 Work package identification information **<wpidinfo>**. Work package identification information is required for this work package (refer to 4.8.6.1).

C.5.2.7.2 Initial setup information **<wpinfo>**. Initial setup information is not required for this work package.

C.5.2.7.3 Introduction **<intro>**. A brief scope statement shall be prepared explaining the purpose of the work package.

C.5.2.7.4 Stowage guide **<stowinfo>**. Data on the location of applicable COEI, BII, and AAL items shall be prepared. An illustration shall be included to facilitate the location of the items.

C.5.2.7.5 Decal/data plate guide **<decalinfo>**. Data on the location of all decals and data plates shall be prepared. As applicable, illustrations detailing the locations of the decals and data plates shall be included.

Source: https://assist.dla.mil -- Downloaded: 2016-12-05T17:12Z
Check the source to verify that this is the current version before use.

C.5.2.8 On-vehicle equipment loading plan work package **<eqploadwp>**. This work package shall be prepared when applicable to the equipment. The loading plan shall include information provided by the acquiring activity. The data described in C.5.2.8.1 and C.5.2.8.4 shall be included.

C.5.2.8.1 Work package identification information **<wpidinfo>**. Work package identification information is required for this work package (refer to 4.8.6.1).

C.5.2.8.2 Initial setup information **<wpinfo>**. Initial setup information is not required for this work package.

C.5.2.8.3 Introduction **<intro>**. A brief scope statement shall be prepared explaining the purpose of the loading plan and identifying the equipment covered by the on-vehicle equipment loading plan work package.

C.5.2.8.4 Illustrated loading plan list(s) **<loaddesc>**. An illustration identifying and locating the on-vehicle equipment shall be included. External and internal views shall be used, if necessary. As applicable, both tactical and nontactical situation loading configurations shall be shown.

C.6 **NOTES.**

The notes in section 6 apply to this appendix.

Source: https://assist.dla.mil -- Downloaded: 2016-12-05T17:12Z
Check the source to verify that this is the current version before use.

This page intentionally left blank.

Source: https://assist.dla.mil -- Downloaded: 2016-12-05T17:12Z
Check the source to verify that this is the current version before use.

APPENDIX D

TROUBLESHOOTING PROCEDURES

D.1 **SCOPE.**

D.1.1 Scope. This appendix establishes the technical content requirements for the preparation of troubleshooting procedures for major weapon systems, and their related systems, subsystems, equipment, weapons replacement assemblies (WRAs), and shop replacement assemblies (SRAs). This Appendix is a mandatory part of this standard. The information contained herein is intended for compliance. The requirements are applicable for all maintenance levels through overhaul (depot) including Depot Maintenance Work Requirements (DMWRs) and National Maintenance Work Requirements (NMWRs).

D.2 **APPLICABLE DOCUMENTS.**

The applicable documents in section 2 apply to this appendix.

D.3 **DEFINITIONS.**

The definitions in section 3 apply to this appendix.

D.4 **GENERAL REQUIREMENTS.**

D.4.1 General. Troubleshooting procedures shall be prepared for weapon systems, major equipment, components, and applicable support and interface equipment. Troubleshooting procedures and supporting illustrations shall be prepared so that operator/crew and maintenance personnel can perform all required operator through depot level (overhaul) troubleshooting.

D.4.2 Types of troubleshooting models. IETMs shall support one of the two modes of diagnostics, a simple mode and a complex mode. Linear IETMs shall use the simple diagnostic mode. Non-Linear IETMs shall use either mode as specified by the acquiring activity.

D.4.2.1 Simple diagnostic mode explanation. The simple diagnostic mode of troubleshooting model is identical to the page based models. The diagnostics are linear using binary (yes|no, true|false) logic. The simple model does not support state table functionality. Any simple model diagnostics that requires state table support shall be authored as a complex model.

D.4.2.2 Complex diagnostic mode explanation. The complex diagnostic mode provides for such functionality as direct interface between the IETM and test equipment/hardware, dynamic support to system changes through manipulation of a state table, allows for user data input, allows evaluation and actions to be taken based on multiple inputs and allows multiple branching. The complex mode can support simple binary troubleshooting. The acquiring activity shall specify those features desired in their diagnostics through the IETM Functionality Matrix (see A.5.2).

D.4.2.2.1 State table explanation. The state table may be the function of either the IETM presentation application or some form of Maintenance Information System that includes IETM presentation capability. A state table provides the IETM and /or the user with information on the condition of the task being performed or changes in system or user defined variables.

Source: https://assist.dla.mil -- Downloaded: 2016-12-05T17:12Z
Check the source to verify that this is the current version before use.

D.4.2.2.2 State table input. Input to the state table may come from various sources such as:

a. Initial settings from the TM data, entered by the author during TM development.
b. Input from installed systems/subsystems through direct interconnection with the system/subsystem or data bus connectivity. This input may be either values obtained during initialization of the system or as a result of user or other input obtained during a diagnostic or operational test.
c. Input provided by the TM (end) user through menu selection choices or direct input through dialogs provided by the IETM

D.4.2.2.3 State table limits. State table manipulation in this standard is limited to those initial settings that are included in the TM source data (refer to D.4.2.2.2a above) by the author. Other state table input options are requirements of the IETM presentation system and are addressed in the TM source data. At no time shall changes to state table variables be allowed to change the TM source data. TM source data shall only be changed as a result of an approved TM change.

D.4.2.2.4 Minimum state table requirements. As a minimum, a state table shall allow storing system and user input. State table information may be used by the system to perform tests, evaluate, provide feedback, make comparisons with other stored information, or provide alternative courses of action..

D.4.2.2.5 Additional state table options. In more sophisticated systems, the state table may be tied into specific item status file(s). This more robust state table would store information from all on going maintenance and provide all users with the condition of equipment at any specific point in time (i.e., in service, awaiting parts, outstanding maintenance actions [open panels or fuel cells or other conditions that might preclude some maintenance from being performed or allow skipping some preconditions as they have been previously completed]).

D.4.3 Development of troubleshooting instructions. Troubleshooting instructions shall cover all items comprising the weapon system/equipment, such as assemblies, subassemblies, components, wiring, junction boxes, and accessories. Troubleshooting procedures shall isolate faults to the part(s) authorized by the parts information for repair or replacement at the maintenance level addressed. Tasks shall be presented in the order in which they are performed. Approved Logistics Management Information (LMI), service experience, performance data on similar equipment, other reliability, maintainability, and supportability (RMS) and operational availability (Ao) data available shall be used in the preparation of specific troubleshooting procedures. Troubleshooting procedures shall begin with testing, observed problems, a fault symptom or malfunction and shall diagnose to a single fault/failure. Troubleshooting shall refer to specific maintenance or repair tasks to correct the fault. Instructions, where applicable, shall flow from operator level through field and sustainment until the fault is isolated. Procedures shall include schematics and illustrations as needed (or shall reference to required schematics, etc.). Troubleshooting data shall be test and fault-isolation oriented. Troubleshooting instructions shall include detailed inspection and troubleshooting information. Instructions shall include or reference to functional descriptions of subsystems being diagnosed to aid the operator/technician. The method used for identifying system equipment test points, including the requirements and methods of determining defects through visual inspection, shall be explained.

Source: https://assist.dla.mil -- Downloaded: 2016-12-05T17:12Z
Check the source to verify that this is the current version before use.

D.4.4 Maintenance level applicability. Requirements contained in this appendix are applicable to all maintenance levels unless specifically noted in bold and in parentheses (i.e., **Field**). The labeled requirements shall be applicable to all TMs containing that maintenance level. An explanation of all applicable Department of Army maintenance levels is provided in section 3.

D.4.5 Preparation of digital data for electronic delivery. Technical manual data prepared and delivered digitally in accordance with this standard shall be Extensible Markup Language (XML) tagged using the Document Type Definition (DTD) for Troubleshooting Procedures and the XML Stylesheet Language (XSL), or style sheets in accordance with MIL-STD-2361. Refer to 4.6 for information on obtaining or accessing the DTD and style sheets. XML tags used in the DTD are noted throughout the text of this standard in bracketed, bold characters (i.e., **<tswp>**) as a convenience for the TM author and to ensure that the tags are used correctly when developing a document instance.

D.4.6 Use of the DTD/XSLs. The DTD referenced in this standard interpret the technical content and structure for the functional requirements contained in this appendix and are mandatory for use. Development of IETMs is accomplished through the use of this standard, the DTD, and the guidance contained in MIL-HDBK-1222. The guidance contained in MIL-HDBK-1222 applies unless they conflict with the requirements in this appendix. The requirements in this appendix take precedence over the guidance contained in MIL-HDBK-1222. A style sheet is used to interpret the style and format for screen display. For additional information on DTD and specific XSLs or style sheets, refer to MIL-STD-2361.

D.4.7 Content structure and format. The examples provided herein are an accurate representation of the content structure and format requirements contained in this appendix and shall be followed to permit the effective use of the DTD for Troubleshooting Procedures.

D.4.8 Style and format. This standard provides style and format requirements for the technical content requirements described in this appendix. These requirements are considered mandatory and are intended for compliance.

D.4.9 IETM functionality. The specific level of functionality and user interaction to be provided in the IETMs shall be in accordance with the functionality matrix contained in Appendix A.

D.4.10 Work package development. Technical manual data developed in accordance with this appendix shall be divided into individual, stand alone units of information called work packages. A work package shall consist of descriptive, operational, maintenance, troubleshooting, support, or parts information for the weapon system or equipment.

D.4.11 Safety devices and interlocks. Information shall be prepared pertaining to the purpose and location of all safety devices and interlocks in conjunction with the pertinent procedures.

D.4.12 Electrostatic discharge (ESD) sensitive parts. If the equipment contains ESD sensitive parts, components, or circuits, cautions, and ESD labels shall be incorporated into the applicable tasks and procedures to ensure ESD sensitive parts are not damaged or degraded during maintenance and operation. Refer to 4.8.18 for requirements on labeling with ESD. Actions which could damage ESD sensitive parts, but which are not directly related to handling or operation of ESD sensitive parts, shall not be annotated with the ESD acronym, but shall be preceded by a caution statement.

Source: https://assist.dla.mil -- Downloaded: 2016-12-05T17:12Z
Check the source to verify that this is the current version before use.

D.4.13 Nuclear hardness. If the weapon system/equipment has nuclear survivability requirements (for example, over pressure and burst, thermal radiation, electromagnetic pulse, or transient radiation effects on electronics), cautions and Hardness-Critical Processes (HCP) labels shall be incorporated into the applicable tasks and procedures to ensure the hardness of the equipment is not degraded during handling or operation. Refer to 4.8.17 for requirements on labeling with HCP. Actions which could degrade hardness, but which are not directly involved in establishing nuclear hardness, shall not be annotated with the acronym, but shall be preceded by a caution statement.

D.4.14 Selective application and tailoring. This standard contains some requirements that may not be applicable to the preparation of all technical manuals. Selective application and tailoring of requirements contained in this appendix are the responsibility of the acquiring activity and shall be accomplished using Appendix A, IETM Functionality And Data Display Requirements And Content Selection Matrixes. The applicability of some requirements is also designated by one of the following statements: unless specified otherwise by the acquiring activity; as/when specified by the acquiring activity; or when specified by the acquiring activity.

D.5 **DETAILED REQUIREMENTS.**

D.5.1 Testing and troubleshooting philosophy. Testing and troubleshooting data shall be developed to the extent required to maintain aircraft and other major weapon systems, equipment, components and support equipment at the authorized maintenance level in accordance with the Logistics Management Information (LMI), Maintenance Allocation Chart (MAC), or Maintenance Plan and the Source, Maintenance, and Recoverability (SMR) codes developed for the weapon system/equipment. Other factors to be considered in the development of troubleshooting procedures include, but are not limited to, the following:

a. Technical experience (target audience).
b. User environment.
c. System quick-turnaround requirements.
d. Test equipment requirements and availability.
e. Automated versus manual testing.
f. Replaceable component and part reliability.
g. Ease of testing.
h. Test access time.
i. Test time.

D.5.2 Information to be provided. Troubleshooting information shall be provided in combination with test procedures. This testing and troubleshooting information shall guide the technician, in as practical a manner as possible, to the system, subsystem, equipment, weapons replacement assembly (WRA), shop replacement assembly (SRA), or further to the replaceable part, interconnecting wire, or mechanical linkage which caused the malfunction or failure. All information required to perform the tests and evaluate probable malfunctions of the assembled systems or equipment shall be provided.

Source: https://assist.dla.mil -- Downloaded: 2016-12-05T17:12Z
Check the source to verify that this is the current version before use.

D.5.2.1 Methods of testing and troubleshooting. The number of interrelated systems, assemblies, subassemblies, and components, types of equipment, and maintenance plan shall be taken into consideration as to the type and depth of testing and troubleshooting instructions to be developed. Based on the complexity of the system or equipment, manual (non-automatic), semi-automatic or automatic testing and troubleshooting methods shall be used. Functional testing is usually performed using a test set or test console whereby technicians make end-to-end checks of the system or equipment to ensure it will perform the function it was intended to do.

D.5.2.1.1 Manual (nonautomatic) troubleshooting. Troubleshooting procedures using nonautomatic test equipment shall be established on a system test concept. To meet the objectives of reduced maintenance downtime and decreased fault detection time, malfunction symptoms shall be identified to specific points of entry into the testing/troubleshooting cycle. Every effort shall be employed to avoid repetition of time consuming end-to-end tests.

D.5.2.1.2 Semi-automatic or automatic testing and troubleshooting. Many high performance systems have been designed to use semi-automatic/automatic test equipment. These systems are designed and programmed for rapid electronic test in the interest of reducing maintenance downtime to fault isolate and repair.

D.5.2.1.3 Testing and troubleshooting using built-in-test equipment. Built-in-test (BIT) capabilities are designed to operate in various formats. One of these formats is built-in-test using diagnostic software; another is the incorporation of electronically controlled sensors within the systems to be tested. Testing procedures shall identify the software required for test performance.

D.5.2.1.4 Sensor derived failures. Sensors, installed at critical points shall be used to detect discrepancies in system operation.

D.5.2.1.5 Failure interpretation. Lookup tables for manually tested systems or software coding for semi-automatic and automatic systems shall be prepared so the maintenance technician may properly interpret these displays and isolate and correct malfunctions.

D.5.2.2 Types of testing and troubleshooting information. Testing and troubleshooting information includes fault reporting/fault isolation data and detailed testing and troubleshooting procedures for each weapon system equipment, systems, components and support equipment. When applicable, integrated system testing and troubleshooting shall also be included.

D.5.2.2.1 Fault reporting/fault isolation information. Fault reporting information provides crew members or other operating personnel with a standardized means for reporting malfunctions and fault symptoms. Fault isolation information is designed for use in rapid isolation of faults revealed during an operational mission or when the aircraft/weapon system is in an operational configuration on the ground. This data shall instruct maintenance personnel as to what maintenance actions to perform and/or what procedures to use to correct reported faults. Fault reporting information and the fault isolation data are designed to be used together. Fault isolation information coverage shall be limited to faults identified in the fault reporting data, which require specific procedures to isolate the cause. Fault reporting data shall reference the fault isolation data to the maximum extent practical for isolation of indicated malfunctions.

Source: https://assist.dla.mil -- Downloaded: 2016-12-05T17:12Z
Check the source to verify that this is the current version before use.

D.5.2.2.2 Integrated system testing and troubleshooting. When several systems are dependent upon each other for proper operation, the interdependent systems, as a unit, are identified as an integrated system. The testing of an integrated system is a checkout of the interdependent systems and shall reflect the assumption that the technician performing the check is qualified and is familiar with its systems and subsystems. Development and content of testing and troubleshooting for integrated systems shall be determined based on the systems having self-test or built-in test capabilities or requiring the use of a system peculiar test set or common test equipment. These compound applications require more specifics on the criteria of which components or signals are tested by which method. In addition to coverage of the integrated system, the associated systems making up the integrated system shall be covered separately.

D.5.2.2.2.1 Integrated systems having self-test or built-in test capability. Testing and troubleshooting procedures shall identify the components or functions that are tested, and any user inputs required for proper testing (power parameters, signals, motion, air, hydraulic, etc.). If wiring tests are included they should have defined testing parameters (which wires are tested, resistance tolerances, open definitions, wire-to-wire and wire-to-ground resistances, and any peculiar wire criteria) and what fault verification is required for a failure indication.

D.5.2.2.2.2 Integrated systems requiring the use of system peculiar test sets. Testing and troubleshooting procedures shall include identical parameters as those in D.5.2.2.2.1 with the additional requirement for special cables or support equipment that may be required.

D.5.2.2.2.3 Integrated systems requiring the use of common test equipment. Testing and troubleshooting procedures shall focus on actual readings or signal requirements so sources of common test equipment will not be restricted.

D.5.3 Troubleshooting procedures content. The procedures shall contain all essential and pertinent information that would be included in any other form of maintenance procedure. This includes warnings, cautions, notes, power turn-on procedures, precheckout procedures, reference diagrams, and initial switch settings. In addition to external causes for malfunctions, troubleshooting should also identify symptoms resulting from failure of every spare and repair part authorized for replacement at user level. Troubleshooting procedures shall be prepared assuming one malfunction at a time is being corrected. The operator/technician shall be instructed to perform any applicable self-tests, alignments, and inspections before beginning any other troubleshooting procedures. As applicable, an operational check shall be specified to be performed after the fault is corrected to ensure correct operation of the system. Troubleshooting procedural instructions shall be prepared following these general requirements.

a. A concise explanation of the testing and troubleshooting format and an explanation on how to use the testing and troubleshooting procedures with the malfunction/symptom index, when applicable.
b. The location for each component, accessory, connector, or junction box in the system under test shall be provided or a reference to the equipment description and data work package shall be included. The text and illustrations, as necessary, shall identify every test connector or other test point to be used in the test.

Source: https://assist.dla.mil -- Downloaded: 2016-12-05T17:12Z
Check the source to verify that this is the current version before use.

c. A complete list of test options shall be stipulated by the troubleshooting procedure. List any self-tests that are associated with the system. Self-test schemes shall be described as the prime troubleshooting tool, with manual or automatic troubleshooting prepared to supplement the instructions where the self-test leaves off or fails to locate the malfunction. Build the procedure using system self-tests before using external test equipment.

d. Test setup procedures and post-test teardown procedures.

e. Complete step-by-step troubleshooting procedures, including instructions required for use and application of installed on-line testing equipment. Procedures shall take into account controls, test point accessibility, indicator displays, and the feasibility of using BITE or automated test equipment where available.

f. Test procedures (e.g., system turn on, identification of time required to run and complete the system test, and an indication of any possible mid-test interruptions or stoppages and how to respond to them).

g. Backup diagrams showing all test points, input and output signals, logic charts, schematics, signal flow diagrams, tables, and other illustrations as required for comprehensible understanding of the procedures.

h. Include any information that will aid the operator/technician, such as waveforms; resistance data; fluid pressures; voltage levels; references to test diagrams, functional diagrams, text, etc.; and alignment procedures, checkout procedures, or other scheduled maintenance procedures. Connector numbers, pin designations, etc., shall be identified.

i. Special attention shall be given to interface wiring fault isolation procedures. Wiring fault isolation procedures shall include the following types of data, as applicable:

   (1) Specific wire reading access points and resistances for wiring components (where practical).

   (2) Wire-to-wire and wire-to-ground criteria for circuit integrity.

   (3) Special wire definition where required (including interconnecting criteria for proper sealing or terminal application), and special notations where wire harnesses should be completely replaced and not repaired.

   (4) It is also essential when developing fault isolation procedures, to provide or refer to ground stud tables, which include type, location, and wires connected, charts for both connectors and terminal boards, and a wire number log to identify any wire to its prime wiring diagram.

D.5.4 Types of testing and troubleshooting. Depending on the type and complexity of the weapon system/equipment, the TM may contain the following testing and troubleshooting categories.

D.5.4.1 Aviation testing and troubleshooting category **<troubleaviationcategory>**. When developing Aircraft Troubleshooting TMs the following work packages shall be developed, as applicable.

a. Introduction work package **<tsintrowp>**.

b. Technical description work package **<techdescwp>**.

c. Troubleshooting index work package **<tsindxwp>.**

Source: https://assist.dla.mil -- Downloaded: 2016-12-05T17:12Z
Check the source to verify that this is the current version before use.

d. Operational checkout work packages <**opcheckwp**>.

e. Troubleshooting work packages <**tswp**>.

f. Combined operational checkout and troubleshooting work package <**opcheck-tswp**>.

g. Diagnostic work package <**diagnosticwp**>.

D.5.4.2 Standard testing and troubleshooting category <**troublecategory**>. When developing TMs with maintenance level below depot the following work packages shall be developed, as applicable.

a. Troubleshooting index work package <**tsindxwp**>**.**

b. Operational checkout work packages <**opcheckwp**>.

c. Troubleshooting work packages <**tswp**>.

d. Combined operational checkout and troubleshooting work package <**opcheck-tswp**>.

e. Diagnostic work package <**diagnosticwp**>.

D.5.4.3 DMWR/NMWR testing and troubleshooting category **(depot only)** <**troubledmwrnmwrcategory**>. When developing DMWRs or NMWRs the following work packages shall be developed, as applicable.

a. Troubleshooting index work package <**tsindxwp**>**.**

b. Preshop analysis work package <**pshopanalwp**>.

c. Component checklist work package <**compchklistwp**>.

d. Operational checkout work packages <**opcheckwp**>.

e. Troubleshooting work packages <**tswp**>.

f. Combined operational checkout and troubleshooting work package <**opcheck-tswp**>.

g. Diagnostic work package <**diagnosticwp**>.

D.5.4.4 Master index testing and troubleshooting category <**masterindexcategory**>. When developing TM with a master troubleshooting index section the Troubleshooting index work package <**tsindxwp**> shall be developed.

D.5.5 Testing and troubleshooting work packages. Testing and troubleshooting work packages shall be developed for the overall weapon system/equipment and each maintainable system, subsystem, and WRA/SRA for each applicable maintenance level as indicated in the approved MAC or maintenance plan.

D.5.5.1 Work package content. Work packages shall include WP identification information, initial setup information, and all required testing and troubleshooting information. When initial setup information differs for specific testing and troubleshooting procedures, additional work packages shall be developed. Work packages shall stand-alone and contain complete start-to-finish troubleshooting procedures. Any follow-on maintenance that must be performed after troubleshooting is completed shall be included (e.g., disconnect external power, perform operational checks, etc.). When the follow-on maintenance is extensive and is contained in a separate work package, a reference shall be made to the applicable work package. The words "**END OF WORK PACKAGE**" shall be placed below the last data item (i.e., text, illustration, etc.) of the work package. The testing and troubleshooting work packages described in D.5.5.8 for simple linear troubleshooting or D.5.6 for complex diagnostics shall be prepared, as applicable.

Source: https://assist.dla.mil -- Downloaded: 2016-12-05T17:12Z
Check the source to verify that this is the current version before use.

D.5.5.2 Types of testing and troubleshooting work packages. The following types of testing and troubleshooting work packages shall be developed, as applicable. Refer to MIL-HDBK-1222 for typical examples of testing and troubleshooting work packages.

D.5.5.3 Introduction work package **(Aircraft Troubleshooting TMs only) <tsintrowp>**. This work package shall describe the testing and troubleshooting process used to perform troubleshooting and shall include information on the methods used to perform troubleshooting. The general flow of the troubleshooting process shall be described and the general methods used to perform testing and troubleshooting shall be included. Any information peculiar to troubleshooting electrical subsystems and electronic equipment shall also be described. If a troubleshooting index **<tsindxwp>** is used, an explanation of the index shall be provided.

D.5.5.3.1 Work package identification information **<wpidinfo>**. Work package identification information is required for this work package (refer to 4.8.6.1).

D.5.5.3.2 Initial setup information **<wpinfo>**. Initial setup information is not required for this work package.

D.5.5.4 Technical description work packages **<techdescwp> (Aircraft Troubleshooting Manuals only)**. A technical description work package may be developed for each system and subsystem of the weapon system, as applicable. The work package shall, as applicable, include the following information in D.5.5.4.1 through D.5.5.4.5.

D.5.5.4.1 Work package identification information **<wpidinfo>**. Work package identification information is required for this work package (refer to 4.8.6.1).

D.5.5.4.2 Initial setup information **<wpinfo>**. Initial setup information is not required for this work package.

D.5.5.4.3 Equipment description and data **<descproc>**. When equipment description and data is required to support the testing and troubleshooting procedures it shall be prepared in accordance with the requirements provided in B.5.3.3 through B.5.3.6 Equipment Description, as applicable. If this information is provided in another TM, a reference to the TM may be included in lieu of including the descriptive data.

D.5.5.4.4 Controls and indicators **<ctrlindproc>**. When it is necessary to provide information concerning the description and use of the controls and indicators to support the testing and troubleshooting procedures, it shall be prepared in accordance with the requirements provided in C.5.2.3.3 or C.5.2.3.4 Control and Indicator Description, as applicable. If this information is provided in another TM, a reference to the TM may be included in lieu of including the controls and indicator data.

D.5.5.4.5 Theory of operation **<thryproc>**. When theory of operation is required to support the troubleshooting procedures, it shall be prepared in accordance with the requirements provided in B.5.4.3 Theory of Operation, as applicable. If this information is provided in another TM, a reference to the TM may be included in lieu of including the theory data.

D.5.5.5 Troubleshooting index work package **<tsindxwp>**. This work package shall be prepared as directed by acquiring activity and consist of either a malfunction/symptom index **<tsindx.symptom>/<tsindx.messageword>** or a system/subsystem index **<tsindx.system>**.

Source: https://assist.dla.mil -- Downloaded: 2016-12-05T17:12Z
Check the source to verify that this is the current version before use.

D.5.5.5.1 Work package identification information **<wpidinfo>**. Work package identification information is required for this work package (refer to 4.8.6.1).

D.5.5.5.2 Initial setup information **<wpinfo>**. Initial setup information is not required for this work package.

D.5.5.5.3 Malfunction/symptom index **<tsindx.symptom>**/**<tsindx.messageword>**. When all probable faults have been determined and described, prepare a malfunction/symptom index work package using the exact description of the fault or symptom as was used in the troubleshooting procedures. Group symptoms to common system areas both in the malfunction/symptom index and in the troubleshooting procedures. For example, if a system has a data link, communications, radar, display, and tracking systems, the symptoms would be grouped into each related area. All fault symptoms of a communications nature would fall into the communications group. The symptoms may be further divided into functions within the communications group that would be common. The same would be done for radar, data link, display, and tracking systems. This index shall include the following data.

a. List all fault symptoms or known malfunctions in alphabetical order by malfunction/ symptom **<malfunc>** or by built-in test code/fault message word **<messageword>** and reference this information to the applicable testing and troubleshooting WP **<xref>/ <link>/<extref>** or the required corrective action **<action>**.
b. For complex systems, list symptoms by subsystem categories **<tsindx.symptom-category>/<tsindx.messagewor-category>**, if necessary, and use codes that help identify specific items. Subsystem categories shall be listed in alphabetical order or by code.
c. Catalog malfunctions/symptoms by method of detection, if this aids usability.
d. Fault symptom descriptions (titles) shall be standardized between malfunction/symptom index work packages and troubleshooting procedures work packages.

D.5.5.5.4 Master malfunction/symptom index **<tsindx.symptom>**. When applicable, one troubleshooting malfunction/symptom index work package (refer D.5.4.4) shall be prepared for all troubleshooting for the system/equipment.

D.5.5.5.5 System/subsystem index **<tsindx.system>**. This index shall consist of a list of specific systems, subsystems, assemblies and components requiring troubleshooting, referenced to the applicable testing and troubleshooting WP **<xref>/<link>/ <extref>** or required corrective action.

D.5.5.6 Preshop analysis work package **(DMWR/NMWR only) <pshopanalwp>**. Preshop analysis shall apply when data indicates that an inspection or test is more effective in determining useful life of a system, subsystem, or component than a mandatory disassembly. Preshop analysis shall be prepared in accordance with D.5.5.6.1 through D.5.5.6.5.

D.5.5.6.1 Work package identification information **<wpidinfo>**. Work package identification information is required for this work package (refer to 4.8.6.1).

D.5.5.6.2 Initial setup information **<wpinfo>**. Initial setup information is required for this work package (refer to 4.8.6.1.1).

D.5.5.6.3 Scope **<scope>**. The purpose and coverage of the preshop analysis shall be stated.

Source: https://assist.dla.mil -- Downloaded: 2016-12-05T17:12Z
Check the source to verify that this is the current version before use.

D.5.5.6.4 Preparation Procedures <**proc**>.

a. Unpacking and special handling. Procedures shall be prepared for removing the item, assemblies, subassemblies, or components from the shipping containers and packaging material. Instructions shall be prepared on any needed handling requirements for hazardous material, electrostatic sensitive devices, precious metal content, classified material, or critical material. Instructions shall also be prepared for any special condemnation procedures for the item and its assemblies and subassemblies.

b. Checking attached documents. Instructions shall be prepared for checking all tags, forms, and documents attached to the item to determine the reason for its return and to identify any other obvious faults or damage.

c. External inspection. Procedures shall be prepared for external inspection of the item to determine if it is complete and if there is any obvious external damage.

d. Cleaning and preservation. Instructions shall be prepared for cleaning the item to prepare it for preshop analysis testing. They shall include the procedures for any temporary preservation or corrosion protection measures needed to protect the item until the work required is started.

D.5.5.6.5 Preshop analysis procedures <**pshopanal**>. Detailed procedures shall be prepared for performing a preshop analysis. The acquiring activity shall determine if the preshop analysis procedures shall be a narrative or be structured as a checklist. A checklist permits the inclusion of the name and signature of the person performing the analysis and any remarks that are required based on the results of the analysis. If a narrative preshop analysis is not provided, a printable checklist shall be provided. When specified by the acquiring activity, an electronic checklist shall be provided in lieu of the narrative or printable checklist.

a. Narrative procedures <**proc**>. Preshop analysis text shall be presented in procedural format. Test and analysis procedures shall be presented in a logical sequence not to cause any unnecessary disassembly and in the order in which they should be done. Each procedure shall be identified by a step number. Procedures shall be arranged in groups by major components, assemblies, and subassemblies. Each group shall be headed with an applicable title.

b. Checklist <**chklist**>. The checklist shall include the following data.

   (1) Cover sheet/frame <**coverpage**>. The cover sheet/frame (refer to FIGURE D-1) shall contain an area to record the following item information: part number <**partno**>; serial number <**serialno**>; NSN <**nsn**>, modifications required <**modreq**>; reason for overhaul or repair <**reason**>; unpacking of secondary items required <**secitem**>; review of tags <**revtag**> or forms <**revform**> with the item, name <**name**> and signature <**sig**> of person doing the analysis; and date <**date**>.

   (2) Introduction <**intro**>. When necessary, the table of tests and inspections shall be preceded by a brief explanation of its use.

Source: https://assist.dla.mil -- Downloaded: 2016-12-05T17:12Z
Check the source to verify that this is the current version before use.

(3) Table of tests and inspections <**pshopckk.tab**>. This table shall have an entry for each test and inspection procedure. Each entry shall have, as a minimum, the following information: inspection point (the item or area to be inspected), condition, action, remarks, and identification of the personnel performing the inspection. If the procedure is too complex or lengthy to be included in the checklist, a reference to the WP where the procedures or actions are provided, shall be included in the checklist.

D.5.5.7 Component checklist work package **(DMWR/NMWR only) <compchklistwp>**. A component checklist work package shall be prepared when required to support the preshop analysis procedures. This work package shall consist of the data described in D.5.5.7.1 through D.5.5.7.4.

D.5.5.7.1 Work package identification information <**wpidinfo**>. Work package identification information is required for this work package (refer to 4.8.6.1).

D.5.5.7.2 Initial setup information <**wpinfo**>. Initial setup information is required for this work package (refer to 4.8.6.1.1).

D.5.5.7.3 Introduction <**intro**>. When necessary, the checklist shall be preceded by a brief explanation of its use.

D.5.5.7.4 Component checklist <**compchklist**>. The checklist (refer to FIGURE D-2) shall contain the following data, as applicable.

a. Name/nomenclature of the equipment/item <**name**>.
b. Serial number <**serno**>.
c. Date received <**daterec**>.
d. Received from (identify unit) <**recfrom**>.
e. Component name <**compname**>.
f. NSN <**nsn**>.
g. Part number <**partno**>.
h. Quantity required <**qty**>.
i. Quantity received <**qtyrec**>.
j. Visual damage found <**damage**>.

D.5.5.8 Operational checkout and troubleshooting procedures work packages. A series of work packages shall be developed containing operational checkout and troubleshooting procedures for integrated weapon systems and for each independent system and subsystem of the weapon system, as applicable. The content and development requirements for these work packages are provided in D.5.5.8.1 through D.5.5.8.6.

Source: https://assist.dla.mil -- Downloaded: 2016-12-05T17:12Z
Check the source to verify that this is the current version before use.

D.5.5.8.1 Operational checkout and troubleshooting procedures content. Operational checkout and troubleshooting procedures shall guide a technician in as practical a manner as possible in detecting, isolating, and correcting system or equipment failure/malfunctions. Procedures shall ultimately lead to isolating faults to an appropriate adjustment, replaceable parts, interface wires, or mechanical linkage. Instructions shall direct repair or replacement of parts authorized for repair or replacement at the maintenance level covered. Procedures shall be accompanied by schematics, signal flow diagrams, waveforms, tables, and other illustrations for comprehensive understanding of the procedures. When schematics are required as backup data, they shall be referenced or may be contained in the same WP. The schematics shall integrate fluid, mechanical, electrical, and electronic components. Illustrations may also be included that locate and identify the controls and displays used to perform the testing and troubleshooting procedures. If ATE is used and a Test Program Set has been developed, the operational checkout and troubleshooting procedures contained in the Test Program Set shall not be duplicated. A reference to the Test Program Set shall be provided.

D.5.5.8.2 Operational checkout and troubleshooting procedure work package development. Operational checkout and troubleshooting procedures shall be combined and contained in the same WP. Based on the following factors, operational checkout and troubleshooting procedures may be combined into a single work package or may be developed in a separate operational checkout and a separate troubleshooting work package (refer to D.5.5.8.5).

a. Complexity of the system/equipment.
b. The type of test equipment used.
c. System/equipment self-test or BIT capability.
d. Complexity of the test and troubleshooting procedures as determined by the task analysis.
e. Clarity and usability.

D.5.5.8.3 Operational checkout work package **<opcheckwp>**. Operational checkout procedures that subject an aircraft, or other type of major weapon system or their systems, subsystems, components, accessories, and items of equipment to prescribed conditions to determine that they will function in accordance with predetermined test parameters shall be developed. Operational checkout for DMWRs/NMWRs shall be developed as specified by acquiring activity. An operational checkout work package may include test set hookup and disconnect procedures, index of test set message words, a reference index of test set or BIT/BITE fault codes and related actions, and further testing procedures related to the message words and fault codes. The words "**END OF WORK PACKAGE**" shall be placed below the last item (i.e., text, illustration, etc.) in any work package containing the operational checkout procedures. The information in D.5.5.8.3.1 through D.5.5.8.3.7 shall be included in the work package, as applicable.

D.5.5.8.3.1 Work package identification information **<wpidinfo>**. Work package identification information is required for this work package (refer to 4.8.6.1).

D.5.5.8.3.2 Initial setup information **<wpinfo>**. Initial setup information is required for this work package (refer to 4.8.6.1.1).

D.5.5.8.3.3 Introduction **<intro>**. When required, an introduction shall be included explaining how the operational checkout procedures are to be used to perform testing and how they relate to the associated troubleshooting work packages.

Source: https://assist.dla.mil -- Downloaded: 2016-12-05T17:12Z
Check the source to verify that this is the current version before use.

D.5.5.8.3.4 General procedures and precautions **<proc>**. Any general procedures that must be performed prior to checkout and precautions that must be taken during the performance of the checkout procedure shall be included.

D.5.5.8.3.5 Pretest setup procedures **<hookup>**. Procedures for connecting any test and accessory equipment, including cable connections shall be included. Procedures for the initial setting of controls shall also be provided.

D.5.5.8.3.6 Operational checkout procedures **<opcheckproc>**. The selection of an operational checkout type shall be based on the type of system, equipment, or assembly/subassembly being addressed, the target audience, and the maintenance level of the operator/technician. Based on the complexity of the operational checkout to be performed, operational checkout procedures can be structured differently and therefore contain different content elements. The following methods shall be used to prepare operational checkout procedures. Once selected, the operational checkout method shall be prepared in accordance with the requirements outlined below.

a. Operational checkout test procedure **<opcheck>**. Operational checkout procedures <**testproc**> shall consist of a series of numbered steps and substeps **<step1>**, which lead to an indication or condition **<indication>**. Based on the indications or conditions, a corrective action **<action>** is provided (refer to FIGURE D-3). This corrective action can either be stated as a specific remedy or can be a reference **<xref>**/<**link**> to a detailed troubleshooting procedure work package. This process is continued until the complete operational checkout procedure is completed.
b. Test set message word index **<messageindx>**. The message word index shall consist of a series of test set messages or bit-code words with message word description. Based on the message or bit-code word, a corrective shall be stated. This corrective action can either be stated as a specific remedy or can be a reference **<xref>/<link>** to a detailed troubleshooting procedure work package.
c. Fault code reference index **<faultreports>**. The fault code reference index shall consist of fault code(s) that leads to a corrective action. This corrective action can either be stated as a specific remedy or can be a reference **<xref>/<link>** to a maintenance work package. If applicable, additional follow-on operational testing procedures **<follow-on>** shall be included based on the corrective action.

D.5.5.8.3.7 Post-operational shutdown procedures **<disconnect>**. Procedures to return the aircraft, aircraft system, or equipment to its normal configuration, prior to operational checkout setup, if required, shall be included. Any follow-on maintenance shall also be included.

D.5.5.8.4 Troubleshooting work package **<tswp>**. Troubleshooting procedures for detecting, isolating, and correcting aircraft, aircraft systems or other types of weapon system, and their subsystems, and equipment failures and malfunctions shall be developed. Troubleshooting for DMWRs/NMWRs shall be developed as specified by acquiring activity. Work packages will relate either to a specific symptom or to a system, assembly, or component. Work packages related to a system of some complexity may contain more than one set of troubleshooting procedures directed to specific subsystems. The information in D.5.5.8.4.1 through D.5.5.8.4.7 shall be included in the work package, as applicable.

D.5.5.8.4.1 Work package identification information **<wpidinfo>**. Work package identification information is required for this work package (refer to 4.8.6.1).

Source: https://assist.dla.mil -- Downloaded: 2016-12-05T17:12Z
Check the source to verify that this is the current version before use.

D.5.5.8.4.2 Initial setup information **<wpinfo>**. Initial setup information is required for this work package (refer to 4.8.6.1.1).

D.5.5.8.4.3 Introduction **<intro>**. When required, an introduction shall be included explaining how the troubleshooting procedures are to be used to perform troubleshooting and how they relate to the associated operational checkout work packages.

D.5.5.8.4.4 General procedures and precautions **<proc>**. Any general procedures that must be performed prior to troubleshooting and precautions that must be taken during the performance of the troubleshooting procedure shall be included.

D.5.5.8.4.5 Pretest setup procedures **<hookup>**. Procedures for connecting any test and accessory equipment, including cable connections shall be included. Procedures for the initial setting of controls shall also be provided.

D.5.5.8.4.6 Troubleshooting procedures **<tsproc>**. The selection of a troubleshooting type shall be based on the type of system, equipment, or assembly/subassembly being addressed, the target audience description, and the maintenance level of the operator/technician. Based on the complexity of the troubleshooting to be performed, troubleshooting procedures can be structured differently and therefore contain different content elements. The following methods shall be used to prepare troubleshooting procedures. Once selected, the troubleshooting method shall be prepared in accordance with the requirements specified by this document. See MIL-HDBK-1222 for example of troubleshooting procedure.

a. Method A - Text-Logic **<logicproc>**. Troubleshooting procedures for specific fault symptoms shall combine text and logic and consist of a series of steps and substeps **<test>** which lead to an indication or condition **<indication>** (usually stated in the form of a question). Based on these indications or conditions, a "YES" or "NO" response **<answer>** is provided that will guide the technician to either the next step or a series of steps **<test>**, or to a malfunction **<malfunc>** and corrective action **<action>** (refer to FIGURE D-4). This process is continued until the entire troubleshooting procedure is completed. When required, the corrective action may include a reference to the work package or paragraph **<xref>/<link>** that contains the data to perform the corrective action.

b. Method B - Text **<faultproc>**. Troubleshooting procedures shall consist of an all inclusive series of specific fault symptoms for the system/equipment being troubleshot. For each fault symptom **<symptom>**, the probable malfunction or series of malfunctions **<malfunc>** that may have caused the fault shall be listed. For each probable malfunction identified, a corrective action **<action>** shall be stated with a reference to the work package or paragraph **<xref>/<link>** that contains the data to perform the corrective action (refer to FIGURE D-5).

c. Method C - Multiplex read codes **<muxproc>**. This method of troubleshooting is based on the use of computer generated multiplex (MUX) read code data. The MUX read code data are listed in troubleshooting sequence order by signal name.

   (1) Signal data. For each signal name **<signame>** the following MUX read code data shall be provided (refer to FIGURE D-6).

      (a) Memory location <**memloc**>.

      (b) Memory data bit(s) <**memdata**>.

Source: https://assist.dla.mil -- Downloaded: 2016-12-05T17:12Z
Check the source to verify that this is the current version before use.

(c) Condition <**condition**>.

(d) Signal function <**sigfunc**>.

(e) Remarks <**remarks**>.

(f) Pass <**criteria**>.

(g) Fail <**criteria**>**.**

(2) The MUX read code data. The MUX read code data is used in conjunction with a malfunction/symptom index (refer to D.5.5.5.3) and an operational checkout procedure (refer to D.5.5.8.3.6.). For each system or equipment, the MUX read code data shall be listed under the system or equipment name by the specific malfunction/symptom**.**

D.5.5.8.4.7 Post-operational shutdown procedures **<disconnect>**. Procedures to return the aircraft, aircraft system, or equipment to its normal configuration, prior to troubleshooting setup, if required, shall be included. Any follow-on maintenance shall also be included.

D.5.5.8.5 Combined operational checkout and troubleshooting work package **<opcheck-tswp>**. Combined operational checkout and troubleshooting procedures to verify proper operation to prescribed standards and for detecting, isolating, and correcting system and equipment failures and malfunctions shall be developed. Combined operational checkout and troubleshooting for DMWRs/NMWRs shall be developed as specified by acquiring activity. The following information in D.5.5.8.5.1 through D.5.5.8.5.7 shall be included, as applicable.

D.5.5.8.5.1 Work package identification information **<wpidinfo>**. Work package identification information is required for this work package (refer to 4.8.6.1).

D.5.5.8.5.2 Initial setup information **<wpinfo>**. Initial setup information is required for this work package (refer to 4.8.6.1).

D.5.5.8.5.3 Introduction **<intro>**. When required, an introduction shall be included explaining how the operational checkout and troubleshooting procedures are to be used to perform checkout and troubleshooting and how they relate to the associated maintenance work packages that include the corrective actions that will return the equipment to proper operation.

D.5.5.8.5.4 General procedures and precautions **<proc>**. Any general procedures that must be performed prior to checkout and precautions that must be taken during the performance of the checkout procedure shall be included.

D.5.5.8.5.5 Pretest setup procedures **<hookup>**. Procedures for connecting any test and accessory equipment, including cable connections shall be included. Procedures for the initial setting of controls shall also be provided.

D.5.5.8.5.6 Operational checkout and troubleshooting procedures. Operational checkout and troubleshooting procedures may be combined in a single procedure or may be prepared as a separate operational checkout procedure and a separate troubleshooting procedure.

Source: https://assist.dla.mil -- Downloaded: 2016-12-05T17:12Z
Check the source to verify that this is the current version before use.

a. Combined operational checkout and troubleshooting procedures **<opcheck-tsproc>**. Combined operational checkout and troubleshooting procedures shall consist of a series of test procedures **<testproc>** (steps and substeps), which lead to an indication or condition **<indication>**. When a normal indication is obtained, the operational checkout continues until the complete checkout is completed or until an abnormal condition or indication is observed. When the test procedure results in an abnormal indication or condition, a malfunction **<malfunc>** or a series of malfunctions is provided. For each malfunction, the possible corrective actions **<action>** shall be provided (refer to FIGURE D-7). When required, the corrective action may include a reference to the work package or paragraph **<xref></link>** that contains the data to perform the corrective action.

b. Separate operational checkout procedures **<opcheckproc>**. When it is determined that the operational checkout procedures shall be separate from the troubleshooting procedures, the operational checkout procedures shall be included under the heading "OPERATIONAL CHECKOUT". Operational checkout procedures shall be developed in accordance with D.5.5.8.3.

c. Separate troubleshooting procedure **<tsproc>**. When it is determined that the troubleshooting procedures shall be separate from the operational checkout procedures, the troubleshooting procedures shall be included under the heading "TROUBLESHOOTING". Troubleshooting procedures shall be developed in accordance with D.5.5.8.4.

D.5.5.8.5.7 Post-operational shutdown procedures **<disconnect>**. Procedures to return the aircraft, aircraft system, or equipment to its normal configuration, prior to operational checkout or troubleshooting setup, if required, shall be included. Any follow-on maintenance shall also be included.

D.5.5.8.6 Integrated system troubleshooting procedures work packages. When specified by the acquiring activity, integrated system operational checkout and troubleshooting (refer to D.5.2.2.2) shall be developed. Troubleshooting procedures which involve more than one system or more than one major subsystem and which cannot be logically placed in one of the individual system/ subsystem troubleshooting information work packages shall be covered in this type of work package. The content and structure of this work package shall be as described in D.5.5.8.3 and D.5.5.8.4 or D.5.5.8.5.

D.5.6 Diagnostic work package usage **<diagnosticwp>**. The diagnostic work package shall be used to develop troubleshooting procedures for all complex diagnostic models (see D.4.2.2) or simple diagnostic models that require state table manipulation (see D.4.2.2.1). This work package requires work package identification (refer to 4.8.6.1) and initial setup (refer to 4.8.6.1.1).

D.5.6.1 Diagnostic work package **<diagnosticwp>** content. The diagnostic work package shall contain all information required by the maintenance technician to perform a single complete test or multiple tests that isolates a fault. The test may be an entire automatic system test to a series of manual steps required to obtain some level of fault identification. The following types of information shall be included:

a. As applicable, any warnings, cautions, or notes that would apply to the entire diagnostic procedure.

Source: https://assist.dla.mil -- Downloaded: 2016-12-05T17:12Z
Check the source to verify that this is the current version before use.

b. As applicable, any general information that may aide the technician in understanding, setting up, performing the test, or similar information.

c. As applicable, any additional configuration unique hookup <**hookup**> or conditional hookup (depends on state table information) <**hookup-alt**> requirements not identified in the initial setup.

d. As applicable, a reason for performing the test <r**easonfortest**> (see paragraph D.5.2).

e. Shall conduct a single test using of the following methods:

(1) Simple test <t**estwithoutstate**>

(2) Complex test <t**estwithstate**>

(3) Conditional complex test <t**estwithstate-alt**>

f. As applicable, upon testing conclusion, any test equipment not required for next diagnostic test shall be removed through a disconnection procedure **<disconnect>** or conditional disconnection **<disconnect-alt>** procedure.

D.5.6.1.1 Simple tests **<testwithoutstate>**. Simple diagnostic testing shall contain the following information.

D.5.6.1.1.1 Test procedure **<proc>**. The testing procedure is displayed detailing the instructions how to execute the test.

D.5.6.1.1.2 Indication prompt **<simple>**/**<multioption>**. After conducting the testing the user is prompted **<prompt>** for the test indication. The prompt shall indicate to the user the information needed from the test, usually through a question. The test indication shall be entered through selecting a binary indication (i.e. yes/no, true/false, pass/fail) **<simple>** or a list of possible options (i.e. “<3.5” “3.5 to 4.5” “>4.5”) **<multioption>**. Using a simple test excludes the IETM from deriving direct results from test equipment or embedded sensors (since this depends on storing the information in an IETM state variables for evaluation).

D.5.6.1.1.3 Test results **<resultwithoutstate>**. Each test evaluation shall provide a corrective action **<para>**, reference **<link>** to detailed corrective action work package (i.e. repair maintenance work package), or reference **<link>** to further diagnostic testing procedure or work package. When the test has determined the fault **<fault>**, the IETM shall display the fault code to the user for recording the equipment maintenance log. As applicable, upon testing conclusion, any test equipment not required for next diagnostic test shall be removed through a disconnection procedure **<disconnect>**. When the test has concluded and no further testing is required the IETM shall indicate the test completion **<completed_test>**.

D.5.6.1.2 Complex tests **<testwithstate>**. Diagnostic testing shall conduct testing using known system conditions (maintained in the IETM state table), previous test results (maintained in the IETM state table), test equipment results **<diagnostic_group>**, weapon system’s embedded sensor(s) readings **<diagnostic_group>**, and/or information from the user **<interaction>** to conduct evaluations **<evaluate>** on the test information (from the IETM state table, user, and/or weapon system), and directs the user to the next test or corrective action **<resultwithstate>**.

Source: https://assist.dla.mil -- Downloaded: 2016-12-05T17:12Z
Check the source to verify that this is the current version before use.

D.5.6.1.2.1 Test evaluations **<evaluate>**. The evaluation of data shall use one of the approaches listed below.

a. IF statement **<If>**. The IF statement shall evaluation state table information (through user interaction or test results) to determine the appropriate action to perform. When an evaluated expression **<expression>** returns a true condition, the THEN condition **<then>** shall perform the assigned test result(s) **<resultwithstate>** actions and/or conduct further evaluation **<evaluate>** on the test results. When multiple conditions occur that have different test result to perform, each additional condition shall use ELSEIF **<elseif>**. When the evaluated ELSEIF expression **<expression>** returns a true condition the THEN condition **<then>** shall perform the assigned test result(s) **<resultwithstate>** actions and/or conduct further evaluation **<evaluate>** on the test results. When all evaluated expressions **<expression>** returns as false, the ELSE condition **<else>** shall perform the assigned test result(s) **<resultwithstate>** actions and/or conduct further evaluation **<evaluate>** on the test results.

b. LOOP COUNTER statement **<loopfor>**. The LOOP COUNTER statement will repeat the testing actions **<loopaction>** for a predetermined number of iterations **<expression>**. After satisfying iteration count then **<then>** the test result(s) actions **<resultwithstate>** shall be performed and/or further evaluation **<evaluate>** shall be conducted on the test results.

c. LOOP UNTIL CONDITION statement **<loopuntil>**. The LOOP UNTIL CONDITION statement will repeat a testing action **<loopaction>** until an evaluated expression **<expression>** returns a terminating condition (Boolean true expression). After satisfying the terminating condition then **<then>** the test result(s) actions **<resultwithstate>** shall be performed and/or further evaluation **<evaluate>** shall be conducted on the test results. The author shall ensure the LOOP UNTIL CONDITION statement has a terminating condition through setting an IETM state variable(s) **<statemanipulation>** and this terminating condition shall be part of the loop evaluating expression **<expression>**.

d. Loop test actions **<loopaction>**. The looping test action includes any required instruction(s) **<proc>**/**<step1>**/**<para>**, automated test equipment results **<diagnostic_group>**, weapon system's embedded sensor(s) readings **<diagnostics_group>**, information from the user **<dialog>**, conditional information from the user **<dialog-alt>**, and/or updating or setting IETM state variable(s).

D.5.6.1.2.2 Test result actions **<resultwithstate>**. Each test evaluation shall provide a corrective action **<para>**, reference **<link>** to detailed corrective action work package (i.e. repair maintenance work package), reference **<link>** to further diagnostic testing procedure or work package, assigning IETM state variables **<statemanipulation>**, information for the user **<interaction>**, and/or additional information from the user **<interaction>** that may require additional evaluation **<evaluate>**. When the test has determined the fault **<fault>**, the IETM shall display the fault code to the user for recording, either automatically or manually, the equipment maintenance log. As applicable, upon testing conclusion, any test equipment not required for next diagnostic test shall be removed through a disconnection procedure **<disconnect>** or conditional disconnection **<disconnect-alt>** procedure. When the test has concluded and no further testing is required the IETM shall indicate the test completion **<completed_test>**.

Source: https://assist.dla.mil -- Downloaded: 2016-12-05T17:12Z
Check the source to verify that this is the current version before use.

D.5.6.1.3 Conditional tests using the state table **<testwithstate-alt>**. Conditional diagnostic testing shall have the IETM select from various test options, system configuration, environment conditions, etc., the test to conduct through the use of the known information (maintained in the IETM state table). Each test **<testwithstate>** shall have a precondition **<precond>** that allows the previous known information to be evaluated, through a Boolean expression <e**xpression>,** to provide the appropriate diagnostic test (refer to D.5.6.1.2) to perform. One only one test shall be applicable from the conditional test options.

D.5.6.2 Test information source. TABLE D-I. shows the testing elements specifying where the diagnostic test data is derived. An "X" in a column means at least some portion of the element may have capability to enter test data. Testing elements that are used in more than one area are expanded only once in the table. MIL-HDBK-2361 contains full details on usage by the authors and explanation of other perceived usage. See D.4.2.2.3 for specific limits regarding state manipulation.

TABLE D-I. Test Element Matrix.

Test Elements	Author	Weapon System	TM User
Test With State ***<testwithstate>***			
• Precondition Expression <**precond**> (used with Conditional Test With State)	X		
• IETM State Variable Manipulation <**statemanipulation**>	X	X	X
• Alert (Warning, Caution) and Note	X		
• System Description <**sysdesc**>	X		
• Additional information (i.e. Interconnect **<interconnect>**, Test flow **<testflow>**, Function dependences **<funcdepend>**, Schematic **<schematic>**, Component Locator **<comp-locator>**, Harness Index **<harness-indx>**)	X		
• Test Procedure <**proc**>	X		
• Grouped Intrusive Diagnostic <**diagnostic_group**>	X	X	
• User Interaction <**interaction**>	X		X
• Evaluate IETM State Variable <**evaluate**>	X		
Conditional Test With State ***<testwithstate-alt>***			
• Test With State <**testwithstate**>	X	X	X

Source: https://assist.dla.mil -- Downloaded: 2016-12-05T17:12Z
Check the source to verify that this is the current version before use.

TABLE D-I. Test Element Matrix.

Test Elements	Author	Weapon System	TM User
IETM State Variable Manipulation <***statemanipulation***>			
• Precondition Expression <**precond**> (used with Conditional IETM State Variable Manipulation)	X		
• Define IETM State Table Variable <**variable**>	X		
• Calculate an expression <**expression**>	X		
• IETM State Variable Reference <**variableref**>	X		
Conditional IETM State Variable Manipulation <***statemanipulation-alt***>			
• State Table Manipulation <**statemanipulation**>	X		
Grouped Intrusive Diagnostic <***diagnostic_group***>			
• Parameters to Conduct Test <**sendparameter**>	X		
o Parameter Name <**name**>	X		
o IETM State Variable Value <**variableref**>	X		
o Fixed Value <**string**>	X		
• Intrusive Diagnostic <**diagnostic**>	X	X	
Intrusive Diagnostic <***diagnostic***>			
• Diagnostic Description <**desc**>	X		
• Parameters to Conduct Test <**sendparameter**>	X		
o Parameter Name <**name**>	X		
o IETM State Variable Value <**variableref**>	X		
o Fixed Value <**string**>	X		
• Parameter Received from Test Result <**receiveparameter**>	X	X	
User Interaction <***interaction***>			
• State Table Manipulation <**statemanipulation**>	X		
• Dialog <**dialog**>	X		X
• Conditional Dialog <**dialog-alt**>	X		X
• Response Message <**message**>	X		

Source: https://assist.dla.mil -- Downloaded: 2016-12-05T17:12Z
Check the source to verify that this is the current version before use.

TABLE D-I. Test Element Matrix.

Test Elements	Author	Weapon System	TM User
Test without State Table <***testwithoutstate***>			
• Alert (Warning, Caution) and Note	X		
• System Description <**sysdesc**>	X		
• Additional information (i.e. Interconnect **<interconnect>**, Test flow **<testflow>**, Function dependences **<funcdepend>**, Schematic **<schematic>**, Component Locator **<comp-locator>**, Harness Index **<harness-indx>**)	X		
• Test Procedure <**proc**>	X		
• Yes/No Selection <**simple**>	X		X
• Multiple Option Selection <**multioption**>	X		X

D.6 **NOTES.**

The notes in section 6 apply to this appendix.

Source: https://assist.dla.mil -- Downloaded: 2016-12-05T17:12Z
Check the source to verify that this is the current version before use.

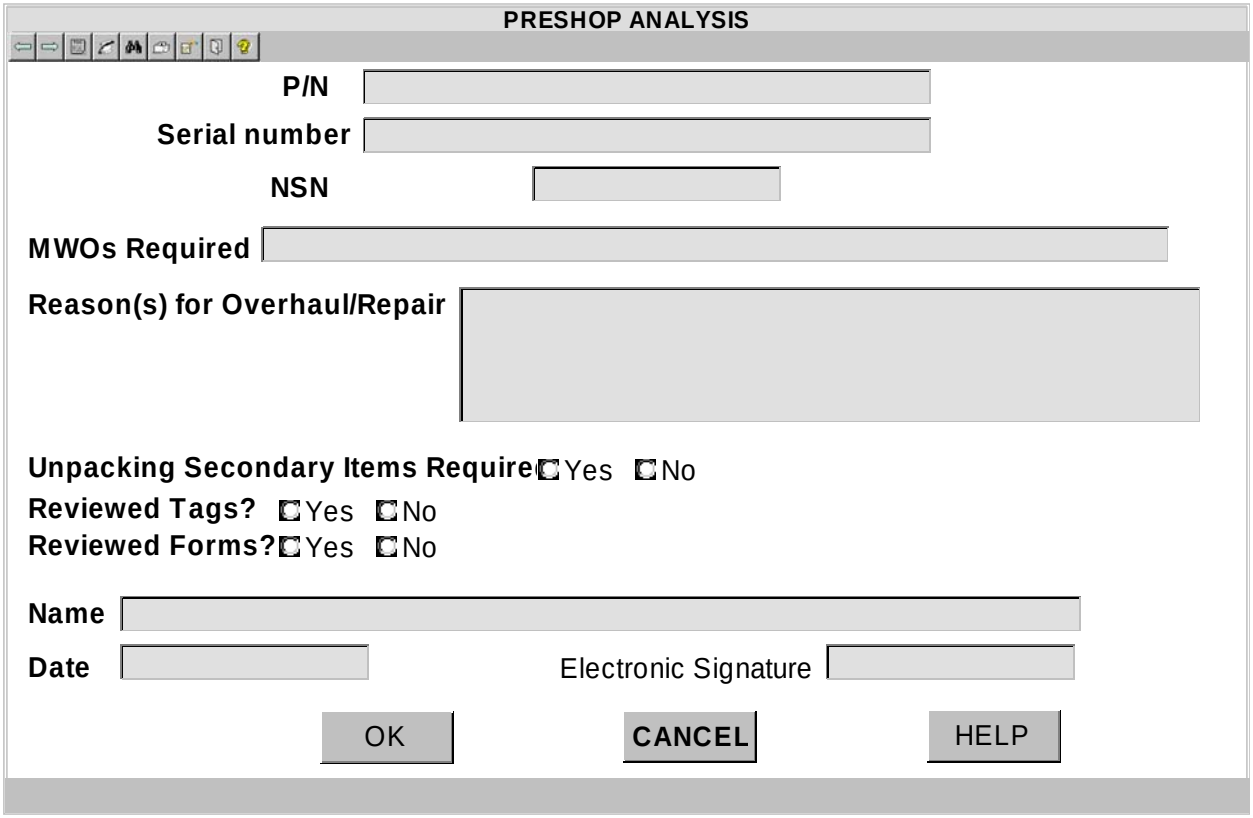

FIGURE D-1. Example of a cover sheet/frame for preshop analysis checklist.

Source: https://assist.dla.mil -- Downloaded: 2016-12-05T17:12Z
Check the source to verify that this is the current version before use.

COMPONENT CHECKLIST

Name/nomenclature of the equipment/item

Serial number

Date received

Received from (identify unit)

Component name

NSN

Part number

Quantity required

Quantity received

Visual damage found

OK CANCEL HELP

FIGURE D-2. Example of a component checklist.

Source: https://assist.dla.mil -- Downloaded: 2016-12-05T17:12Z
Check the source to verify that this is the current version before use.

ARRESTING GEAR SYSTEM OPERATIONAL CHECKOUT

1. Make sure door 103 is installed.
2. Make sure arresting HOOK manual control lever is set to up.
3. Read, record and reset nose wheelwell DDI (Nose Wheelwell DDI Adjustment)

INDICATION/CONDITION

No maintenance code exists.

CORRECTIVE ACTION

Perform troubleshooting Maintenance Code 916.

FIGURE D-3. Example of content for an operational checkout procedure.

Source: https://assist.dla.mil -- Downloaded: 2016-12-05T17:12Z
Check the source to verify that this is the current version before use.

916 Code Displayed with Arresting Hook Actuator Properly Serviced

2. Do substeps below:
   a. Manually raise speed brake and install speed brake aircraft ground safety lock.
   b. Remove door 103.
   c. Disconnect 19P-T012 from temperature compensation pressure switch.

CONDITION/INDICATION	
Does continuity exist between 19J-T012 pins 3 and 4?	
No	Yes

916 Code Displayed with Arresting Hook Actuator Properly Serviced

2. Do substeps below:
   a. Manually raise speed brake and install speed brake aircraft ground safety lock.
   b. Remove door 103.
   c. Disconnect 19P-T012 from temperature compensation pressure switch.

CONDITION/INDICATION	
Does continuity exist between 19J-T012 pins 3 and 4?	
No	Yes

MALFUNCTION

Faulty temperature compensation switch.

ACTION

Replace and do step 16.

FIGURE D-4. Example of content for a troubleshooting procedure (Method A).

Source: https://assist.dla.mil -- Downloaded: 2016-12-05T17:12Z
Check the source to verify that this is the current version before use.

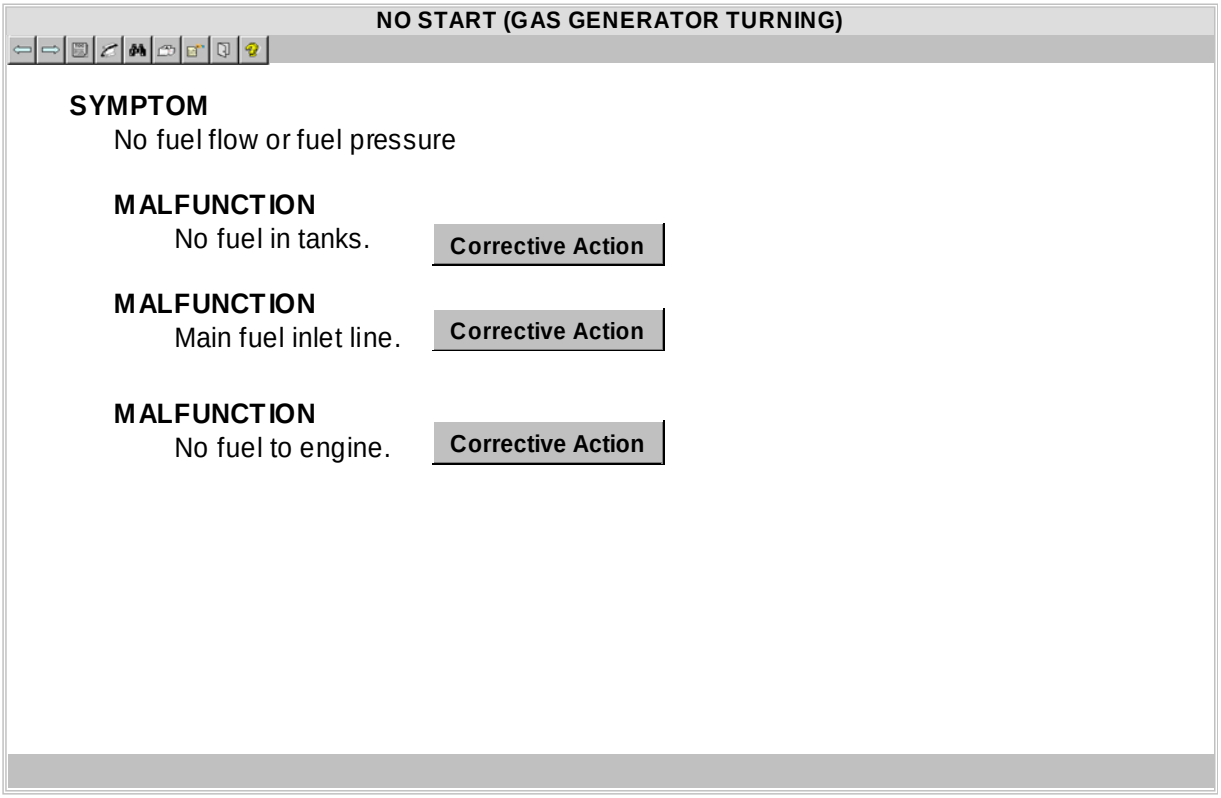

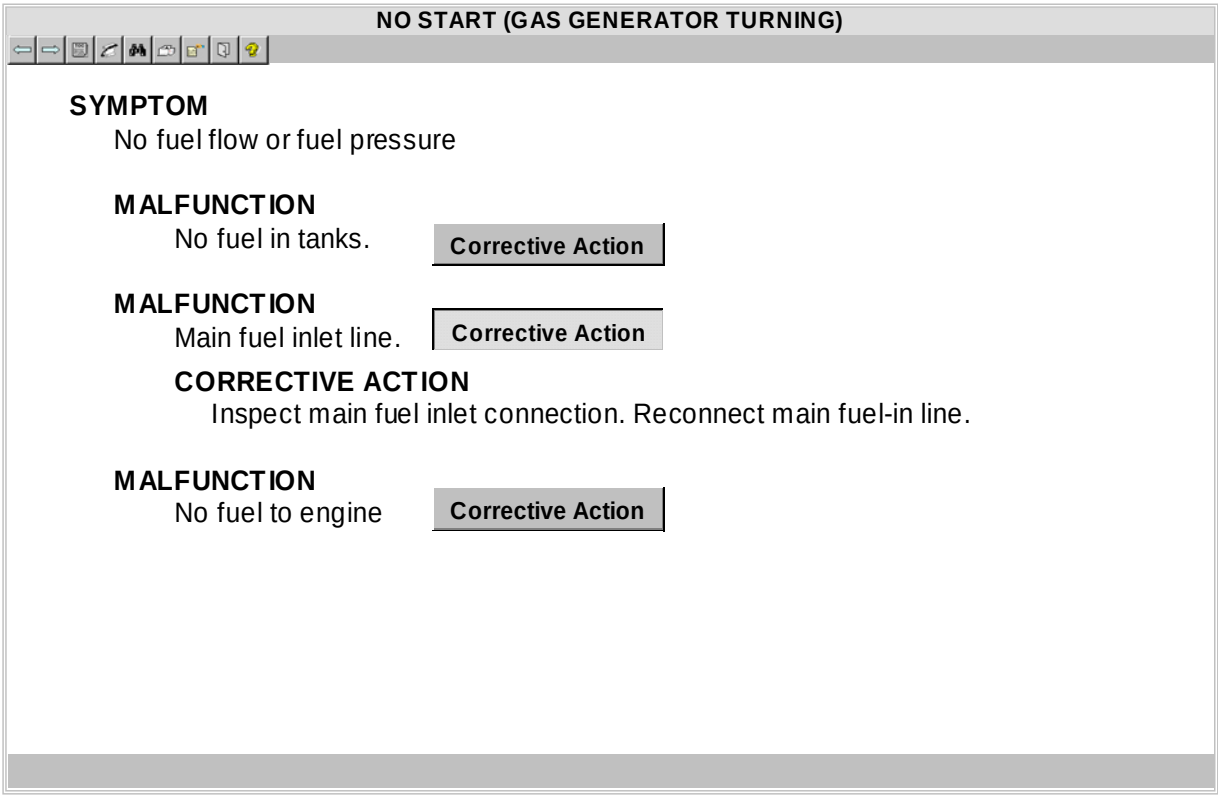

FIGURE D-5. Example of content for a troubleshooting procedure (Method B).

Source: https://assist.dla.mil -- Downloaded: 2016-12-05T17:12Z
Check the source to verify that this is the current version before use.

RANGE DATA CANNOT BE DISPLAYED

SIGNAL NAME: DASEC STATUS WORD DC ANALOG OUTPUT BIT

MEMORY LOCATION: 002150

MEMORY DATA BIT(S): 15 (BINARY)

CONDITION: (None)

SIGNAL FUNCTION: Indicates status of DC analog circuits.

REMARKS: From DASEC to FCC.

PASS: If second digit displayed on HOD is 3 or 7 go to DASEC STATUS WORD AD/DA BIT

FAIL: Location of fault: replace DASEC (TM 1-1520-238-23 Series)

SIGNAL NAME: DASEC STATUS WORD AD/DA BIT

SIGNAL NAME: DASEC STATUS WORD FD/LS TEST

SIGNAL NAME: DASEC STATUS WORD ASE BIT

SIGNAL NAME: DASEC STATUS WORD VD TEST

SIGNAL NAME: DASEC STATUS WORD AGD BIT

FIGURE D-6. Example of content for a troubleshooting procedure (Method C).

Source: https://assist.dla.mil -- Downloaded: 2016-12-05T17:12Z
Check the source to verify that this is the current version before use.

COMPUTER PROCESSOR OPERATIONAL CHECKOUT AND TROUBLESHOOTING

1. Remove computer processor top cover.
2. Apply power to test set and place test set POWER switch to ON position. **Indication/Condition**
3. Place UUT POWER switch in CP position. **Indication/Condition**
4. Place Test Set UUT POWER switch in CP position. Quickly press and release the CP BIT button on the system interface card. Observe the 10 LEDs on the system I/F CCA. **Indication/Condition**

COMPUTER PROCESSOR OPERATIONAL CHECKOUT AND TROUBLESHOOTING

1. Remove computer processor top cover.
2. Apply power to test set and place test set POWER switch to ON position. **Indication/Condition**

   INDICATION/CONDITION
   Test set power indicator is illuminated.

   MALFUNCTION
   If power indicator does not light

   CORRECTIVE ACTION
   Check power source for 28 VDC.
3. Place UUT POWER switch in CP position. **Indication/Condition**
4. Place Test Set UUT POWER switch in CP position. Quickly press and release the CP BIT button on the system interface card. Observe the 10 LEDs on the system I/F CCA. **Indication/Condition**

FIGURE D-7. Example of content for a combination testing and troubleshooting procedure

Source: https://assist.dla.mil -- Downloaded: 2016-12-05T17:12Z
Check the source to verify that this is the current version before use.

This page intentionally left blank.

Source: https://assist.dla.mil -- Downloaded: 2016-12-05T17:12Z
Check the source to verify that this is the current version before use.

APPENDIX E

MAINTENANCE INSTRUCTIONS

E.1 **SCOPE.**

E.1.1 Scope. This appendix establishes the technical content requirements for the preparation of maintenance procedures for major weapon systems, and their related systems, subsystems, equipment, weapons replacement assemblies (WRAs), and shop replacement assemblies (SRAs). This Appendix is a mandatory part of this standard. The information contained herein is intended for compliance. The requirements are applicable for all maintenance levels through overhaul (depot) including Maintenance Procedures, National Maintenance Work Requirements (NMWR) and Depot Maintenance Work Requirements (DMWRs).

E.2 **APPLICABLE DOCUMENTS.**

The applicable documents in section 2 apply to this appendix.

E.3 **DEFINITIONS.**

The definitions in section 3 apply to this appendix.

E.4 **GENERAL REQUIREMENTS.**

E.4.1 General. Maintenance instructions shall be prepared for major weapon systems, equipment, components and applicable support and interface equipment. Maintenance procedures and supporting illustrations shall be prepared so that maintenance personnel can perform all required operator through depot level (overhaul) maintenance.

E.4.2 Development of maintenance instructions. Maintenance instructions shall be prepared for all items comprising the weapon system/equipment, such as assemblies, subassemblies, components, wiring, junction boxes, and accessories. Tasks shall be presented in the order in which they are performed. Sound engineering principles and techniques, approved Logistics Management Information (LMI), service experience, performance data on similar equipment, and all other reliability, maintainability, and supportability (RMS) and operational availability (Ao) data available shall be used in the preparation of specific maintenance instructions.

E.4.3 Maintenance level applicability. Requirements contained in this appendix are applicable to all maintenance levels unless specifically noted in bold and in parentheses (i.e., **Field**). The labeled requirements shall be applicable to all TMs containing that maintenance level. An explanation of all applicable Department of Army maintenance levels is provided in section 3.

E.4.4 Depot maintenance work requirements (DMWR) and national maintenance work requirements (NMWR). When the acquiring activity specifies that a DMWR or NMWR shall be prepared to the best commercial practices, the depot requirements contained in this standard shall be used only as a guide; therefore, the conforming modular DTD for maintenance instructions cannot be used.

Source: https://assist.dla.mil -- Downloaded: 2016-12-05T17:12Z
Check the source to verify that this is the current version before use.

E.4.5 Preparation of digital data for electronic delivery. Technical manual data prepared and delivered digitally in accordance with this standard shall be Extensible Markup Language (XML) tagged using the Document Type Definition (DTD) and the XML Stylesheet Language (XSL), or style sheets in accordance with MIL-STD-2361. Refer to 4.6 for information on obtaining or accessing the DTD and style sheets. XML tags used in the modular DTD are noted throughout the text of this standard in bracketed, bold characters (i.e., **<maintwp>**) as a convenience for the TM author and to ensure that the tags are used correctly when developing a document instance.

E.4.6 Use of the DTD/XSLs. The DTD referenced in this standard interpret the technical content and structure for the functional requirements contained in this appendix and are mandatory for use. Development of IETMs is accomplished through the use of this standard, the DTD, and the guidance contained in MIL-HDBK-1222. The guidance contained in MIL-HDBK-1222 applies unless they conflict with the requirements in this appendix. The requirements in this appendix take precedence over the guidance contained in MIL-HDBK-1222. A style sheet is used to interpret the style and format for screen display. For additional information on DTD and specific XSLs or style sheets, refer to MIL-STD-2361.

E.4.7 Content structure and format. The examples provided in this standard are an accurate representation of the content structure and format requirements contained in this appendix and shall be followed to permit the effective use of the DTD for Maintenance Instructions.

E.4.8 Style and format. This standard provides style and format requirements for the preparation of the technical content requirements described in this appendix. These requirements are considered mandatory and are intended for compliance.

E.4.9 IETM functionality. The specific level of functionality and user interaction to be provided in the IETMs shall be in accordance with the functionality matrix contained in Appendix A.

E.4.10 Work package development. Technical manual data developed in accordance with this appendix shall be divided into individual, stand alone units of information called work packages. A work package shall consist of descriptive, operational, maintenance, troubleshooting, support, or parts information for the weapon system or equipment.

E.4.11 Safety devices and interlocks. Information shall be prepared pertaining to the purpose and location of all safety devices and interlocks in conjunction with the pertinent procedures.

E.4.12 Electrostatic discharge (ESD) sensitive parts. If the equipment contains ESD sensitive parts, components, or circuits, cautions, and ESD labels shall be incorporated into the applicable tasks and procedures to ensure ESD sensitive parts are not damaged or degraded during maintenance and operation. Refer to 4.8.18 for requirements on labeling with ESD. Actions which could damage ESD sensitive parts, but which are not directly related to handling or operation of ESD sensitive parts, shall not be annotated with the ESD acronym, but shall be preceded by a caution statement.

Source: https://assist.dla.mil -- Downloaded: 2016-12-05T17:12Z
Check the source to verify that this is the current version before use.

E.4.13 Nuclear hardness. If the weapon system/equipment has nuclear survivability requirements (for example, over pressure and burst, thermal radiation, electromagnetic pulse, or transient radiation effects on electronics), cautions and Hardness-Critical Processes (HCP) labels shall be incorporated into the applicable tasks and procedures to ensure the hardness of the equipment is not degraded during handling or operation. Refer to 4.8.17 for requirements on labeling with HCP. Actions which could degrade hardness, but which are not directly involved in establishing nuclear hardness, shall not be annotated with the acronym, but shall be preceded by a caution statement.

E.4.14 Selective application and tailoring. This standard contains some requirements that may not be applicable to the preparation of all technical manuals. Selective application and tailoring of requirements contained in this appendix are the responsibility of the acquiring activity and shall be accomplished using Appendix A, IETM Functionality And Data Display Requirements And Content Selection Matrixes. The applicability of some requirements is also designated by one of the following statements: unless specified otherwise by the acquiring activity; as/when specified by the acquiring activity; or when specified by the acquiring activity.

E.5 **DETAILED REQUIREMENTS.**

E.5.1 Preparation of maintenance instructions. Maintenance instructions shall be prepared and subdivided into individual work packages that provide maintenance information to enable a technician to receive, process, inspect, clean, service, test and repair the weapon system/ equipment and associated weapons replacement assemblies/shop replacement assemblies (WRAs/SRAs) to an acceptable performance standard. Maintenance tasks shall be developed in accordance with the LMI, Maintenance Allocation Chart (MAC) or Maintenance Plan, and the Source, Maintenance, and Recoverability (SMR) codes developed for the weapon system/ equipment and components. Maintenance work packages shall be arranged to coincide with the Functional Group Code (FGC) sequence followed in the MAC or parts information.

E.5.2 Types of maintenance. Depending on the type and complexity of the weapon system/equipment, the TM, DMWR, or NMWR shall contain one or more of the following maintenance categories.

E.5.2.1 Preventive Maintenance Checks and Services (PMCS) **<pmcscategory>**. This maintenance category contains only the PMCS requirements with the remaining maintenance tasks contained in later chapter(s). The PMCS category contains the following work packages in specified order.

a. PMCS Introduction work package **<pmcsintrowp>** (refer to E.5.3.4.1)
b. PMCS work package **<pmcswp>** (refer to E.5.3.4.2)

E.5.2.2 Weapon system/equipment, component, assembly, subassembly, and software maintenance with required PMCS **<maintenancepmcscategory>**. This maintenance category contains the following work packages in specified order, unless otherwise indicated.

a. Service Upon Receipt work package**(Field only) <surwp>** (refer to E.5.3.2)
b. Equipment/User Fitting Instruction work package **<perseqpwp>** (refer to E.5.3.3)
c. PMCS Introduction work package **<pmcsintrowp>** (refer to E.5.3.4.1)
d. PMCS work package **<pmcswp>** (refer to E.5.3.4.2)

Source: https://assist.dla.mil -- Downloaded: 2016-12-05T17:12Z
Check the source to verify that this is the current version before use.

e. The following work packages occur in no specific order.
   (1) Maintenance work package **<maintwp>** (refer to E.5.3.5)
   (2) General Maintenance work package **<maintwp>** (refer to E.5.3.6)
   (3) Lubrication instructions work package <**lubewp**> (refer to E.5.3.7)
f. Illustration List of Manufactured Items work package**(Field level or above only) <manuwp>** (refer to E.5.3.8.4.10)
g. Torque Limits work package **(Field level or above only) <torquewp>** (refer to E.5.3.10)
h. Wiring Diagrams work package **(Field level or above only) <wiringwp>** (refer to E.5.3.11)

E.5.2.3 Weapon system/equipment, component, assembly, subassembly, and software maintenance without PMCS **(Except for aircraft TMs, DMWR and NMWR) <maintenancecategory>**. This maintenance category contains the following work packages in specified order, unless otherwise indicated.

a. Service Upon Receipt work package**(Field only) <surwp>** (refer to E.5.3.2)
b. Equipment/User Fitting Instruction work package **<perseqpwp>** (refer to E.5.3.3)
c. The following work packages occur in no specific order.
   (1) Maintenance work package **<maintwp>** (refer to E.5.3.5)
   (2) General Maintenance work package **<maintwp>** (refer to E.5.3.6)
   (3) Lubrication instructions work package <**lubewp**> (refer to E.5.3.7)
d. Illustration List of Manufactured Items work package**(Field level or above only) <manuwp>** (refer to E.5.3.8.4.10)
e. Torque Limits work package **(Field level or above only) <torquewp>** (refer to E.5.3.10)
f. Wiring Diagrams work package **(Field level or above only) <wiringwp>** (refer to E.5.3.11)

E.5.2.4 Depot weapon system/equipment, component, assembly, and subassembly maintenance **<depotcategory>**. The depot maintenance category contains the following work packages in specified order, unless otherwise indicated.

a. Equipment/User Fitting Instruction work package **<perseqpwp>** (refer to E.5.3.3)
b. The following work packages occur in no specific order.
   (1) Maintenance work package **<maintwp>** (refer to E.5.3.5)
   (2) General Maintenance work package **<maintwp>** (refer to E.5.3.6)
   (3) Lubrication instructions work package <**lubewp**> (refer to E.5.3.7)
   (4) Preventive Maintenance Inspections work package **<pmiwp> (aircraft only)** (refer to E.5.3.12.1).
c. Facilities work package <**facilwp**> (refer to E.5.3.8.1)
d. Overhaul Inspection Procedures (OIP) work package **<oipwp>** (refer to E.5.3.8.2)
e. Depot Mobilization Requirements work package **<mobilwp>** (refer to E.5.3.8.3)
f. Quality Assurance (QA) Requirements work package **<qawp>** (refer to E.5.3.8.4)
g. Illustration List of Manufactured Items work package **<manuwp>** (refer to E.5.3.8.4.10)

Source: https://assist.dla.mil -- Downloaded: 2016-12-05T17:12Z
Check the source to verify that this is the current version before use.

h. Torque Limits work package **<torquewp>** (refer to E.5.3.10)

i. The following work packages are for **aircraft only**.

(1) Aircraft Inventory Master Guide work package **<inventorywp>** (refer to E.5.3.12.2).

(2) Storage of Aircraft work package **<storagewp>** (refer to E.5.3.12.3).

j. Wiring Diagrams work package <**wiringwp**> (refer to E.5.3.11)

E.5.2.5 Aircraft maintenance **(aircraft only) <aviationcategory>**. This maintenance category contains the following work packages in specified order, unless otherwise indicated.

a. Service Upon Receipt work package**(Aviation maintenance company (AMC) only) <surwp>** (refer to E.5.3.2)

b. Equipment/User Fitting Instruction work package **<perseqpwp>** (refer to E.5.3.3)

c. The following work packages occur in no specific order.

(1) Maintenance work package **<maintwp>** (refer to E.5.3.5)

(2) General Maintenance work package **<maintwp>** (refer to E.5.3.6)

(3) Lubrication instructions work package <**lubewp**> (refer to E.5.3.7)

(4) Preventive Maintenance Inspections work package **<pmiwp>** (refer to E.5.3.12.1).

d. Illustration List of Manufactured Items work package **(Aviation maintenance company (AMC) level or above only) <manuwp>** (refer to E.5.3.8.4.10)

e. Torque Limits work package **(Aviation maintenance company (AMC) level or above only) <torquewp>** (refer to E.5.3.10)

f. Aircraft Inventory Master Guide work package **<inventorywp>** (refer to E.5.3.12.2).

g. Storage of Aircraft work package **<storagewp>** (refer to E.5.3.12.3).

h. Weighing and Loading work package **(Aviation support battalion (ASB) only) <wtloadwp>** (refer toE.5.3.12.4).

i. Wiring Diagrams work package **(Aviation maintenance company (AMC) level or above only)** <**wiringwp**> (refer to E.5.3.11)

E.5.2.6 Auxiliary equipment maintenance **<auxiliarycategory>**. This maintenance category contains the following work packages in specified order.

a. Auxiliary Equipment Maintenance work package **<auxeqwp>** (refer to E.5.3.13).

b. Illustration List of Manufactured Items work package **(Field level or above only) <manuwp>** (refer to E.5.3.8.4.10)

c. Torque Limits work package **(Field level or above only) <torquewp>** (refer to E.5.3.10)

d. Wiring Diagrams work package <**wiringwp**> (refer to E.5.3.11)

E.5.2.7 Ammunition maintenance **<ammunitioncategory>**. This maintenance category contains the following work packages in no specified order.

a. Ammunition Maintenance work package **<ammowp>** (refer to E.5.3.14.1).

b. Ammunition Marking Information work package **<ammo.markingwp>** (refer to E.5.3.14.2).

c. Foreign Ammunition (NATO) work package **(Field or above) <natowp>** (refer to E.5.3.14.3).

Source: https://assist.dla.mil -- Downloaded: 2016-12-05T17:12Z
Check the source to verify that this is the current version before use.

E.5.2.8 Test and inspection maintenance **(Conventional and chemical ammunition only) <testinspectioncategory>**. This maintenance category contains Maintenance work package **<maintwp>** (refer to E.5.3.5)

E.5.2.9 Shipment/movement and storage maintenance **(Conventional and chemical ammunition only) <shipmentmovementstoragecategory>**. This maintenance category contains Maintenance work package **<maintwp>** (refer to E.5.3.5)

E.5.2.10 Ammunition marking maintenance **(Conventional and chemical ammunition only) <ammomarkingcategory>**. This maintenance category contains Ammunition Marking Information work package **<ammo.markingwp>** (refer to E.5.3.14.2).

E.5.2.11 Preventive maintenance services **(Aircraft preventive maintenance services only) <pmscategory>**. This maintenance category contains Preventive Maintenance Services Inspection work packages **<pms-inspecwp>** (refer to E.5.3.15).

E.5.2.12 Phased maintenance inspections **(aircraft phased maintenance inspection only) <checklistcategory>**. This maintenance category contains Phased Maintenance Inspection work package **<pmi-cklistwp>** (refer to E.5.3.16).

E.5.3 Maintenance work packages. Individual maintenance work packages shall be developed for the overall weapon system/equipment and each maintainable system, subsystem, and WRA/SRA for each applicable maintenance level as indicated in the approved MAC or maintenance plan.

E.5.3.1 Work package content. Work packages shall include WP identification information, initial setup information, and all maintenance tasks, such as remove, inspect, service, test, install, replace, disassemble, assemble, repair, clean, adjust, align, etc. When initial setup information differs for specific maintenance tasks, additional work packages shall be developed. Work packages shall stand-alone and contain complete start-to-finish maintenance procedures. Any follow-on maintenance that must be performed after maintenance procedures are completed shall be included (e.g., disconnect external power, perform operational checks, etc.). When the follow-on maintenance is extensive and is contained in a separate work package, a link to the applicable work package shall be provided. The words "**END OF WORK PACKAGE**" shall be placed below the last data item (i.e., text, illustration, etc.) of the work package containing the maintenance procedure. The maintenance work packages described in E.5.3.2 through E.5.3.16 shall be prepared, as applicable. See MIL-HDBK-1222 for examples of work package identification information format.

E.5.3.2 Service upon receipt work package **(Field only) <surwp>**. This work package shall be prepared and contain information required for the user to ensure that the equipment will be adequately inspected, serviced, and operationally tested before it is subjected to use.

E.5.3.2.1 Work package identification information **<wpidinfo>**. Work package identification information is required for this work package (refer to 4.8.6.1).

E.5.3.2.2 Initial setup information **<wpinfo>**. Initial setup information is required for this work package (refer to 4.8.6.1.1).

E.5.3.2.3 Service upon receipt tasks **<surtsk>**. For equipment that requires extensive service upon receipt, this work package shall be further subdivided into the following tasks described in E.5.3.2.3.1 through E.5.3.2.3.11.

Source: https://assist.dla.mil -- Downloaded: 2016-12-05T17:12Z
Check the source to verify that this is the current version before use.

E.5.3.2.3.1 Siting **<siting>**. Siting instructions peculiar to the equipment shall be prepared, as applicable. In preparing the instructions, operational and maintenance features shall be considered, such as the following:

a. Location.
b. Proximity to power sources.
c. Effective ranges.
d. Terrain requirements to avoid screening, reflections, ground clutter, and other poor operational conditions due to terrain.
e. Technical requirements.
f. Shelter locations.
g. Compensating for adverse siting conditions.
h. When the equipment contains large components such as towers and antennas that require orientation to a baseline during siting.
i. Mobile equipment oriented during installation.

E.5.3.2.3.2 Shelter requirements **<shltr>**. For equipment normally housed in a permanent or semi-permanent shelter (other than a military truck, van, or transportable shelter) during use, the following information shall be prepared.

a. Amount of floor, wall, and height space required.
b. A plan for a typical layout.
c. Required weight capacity of the building floor.
d. Dimensions required for installed equipment.
e. Total weights that the floor must support and the area in square feet over which the total weight will be distributed.
f. Environmental conditions (e.g., venting).
g. Power requirements.
h. Unusual requirements specific to equipment, such as air-conditioning.
i. Architectural and engineering data on beam sizes, lengths, bending moments, and required supports shall not be included.

E.5.3.2.3.3 Service upon receipt of materiel <surmat>. The following instructions shall be prepared.

a. Unpacking **<unpack>**. As a minimum, the following information shall be prepared.
   (1) Any special sequence of action necessary to protect the equipment.
   (2) If a special design reusable container is involved for either the end item or components which are authorized for replacement, instructions shall be prepared to report or reenter the empty container through supply channels. Instructions shall be prepared on how to package the unserviceable component in the empty container in the same manner that the new component was packaged if a component is being replaced.
   (3) Man-hour requirements and total man-hours required for unpacking the equipment.

Source: https://assist.dla.mil -- Downloaded: 2016-12-05T17:12Z
Check the source to verify that this is the current version before use.

b. Checking unpacked equipment <**chkeqp**>. Instructions shall be prepared for a condition check of the shipment (including that of pallets, containers, boxes, and legibility of markings). The following data shall be included. These instructions may be contained in a table (refer to MIL-HDBK-1222 for example of Checking unpacked equipment **standard information**).

(1) Packaging material <**crit.insp.tab**>. For each item <**eqpitem**> of a component requiring inspection, acceptable <**accept**>, reparable <**repairable**>, and nonreparable <**nonrepairable**> conditions shall be provided.

(2) Equipment components <**pecul.insp.tab**>. A table shall be provided that lists, by location <**location**>,each item <**eqpitem**> of a component <**compntassem**> requiring inspection. For each of these items an action <**step1**> shall be provided and, if applicable, a reference <**remarks**> made to another work package.

(3) In addition, the following shall be inserted exactly as stated here.

"Inspect the equipment for damage incurred during shipment. If the equipment has been damaged, report the damage on SF 361, Transportation Discrepancy Report.

Check the equipment against the packing slip to see if the shipment is complete. Report all discrepancies in accordance with applicable service instructions (e.g., for Army instructions, see DA PAM 750-8).

Check to see whether the equipment has been modified."

c. Processing unpacked equipment <**processeqp**>. Instructions shall be prepared for processing the unpacked equipment (e.g., removing excess lubricant from a new rifle), as long as they do not conflict with any warranty provisions. The following information shall be prepared, as applicable.

(1) Any special skills required by processing personnel.

(2) All caustic, corrosive, and/or toxic material used during processing shall be identified and applicable warnings and cautions given.

(3) Instructions on safe disposal of waste products generated during processing actions.

(4) Man-hour requirements and total man-hours required for processing the equipment.

E.5.3.2.3.4 Installation instructions <**install**>. Instructions shall be prepared to install the equipment properly, including use of tools; to make the necessary interconnections; and to lubricate, calibrate, and adjust the equipment.

a. Cable diagrams shall be included or referenced as necessary. When cable assemblies are not supplied but are required for bench test setup, instructions shall be prepared for fabricating interconnecting cable assemblies from spares and bulk supplies. The part number, drawing number, and manufacturer or designer for each part of the cable assembly shall be shown, and wires, connectors, pin connections, and letters or other designators shall be identified.

(1) Instructions shall be prepared for any mating connectors that call for a special procedure either to make the proper connection or to prevent damage to the connector. Cautions shall be included where necessary.

Source: https://assist.dla.mil -- Downloaded: 2016-12-05T17:12Z
Check the source to verify that this is the current version before use.

(2) A wiring diagram shall be prepared which fully identifies each wire to be connected, by color code or wire number if applicable. This diagram shall show the location of each pertinent terminal, which shall be identified by number or other marking, if available, or by position if neither is available. Where appropriate, voltage readings shall be annotated.

(3) All alternate connection patterns required for various modes of operation shall be shown and explained.

(4) Only one diagram shall be used to illustrate interconnection patterns which appear more than once within the same equipment.

b. For installation of plug-in items, diagrams shall be prepared or referenced showing the location of items that are not installed in the equipment when received. Instructions shall be prepared whenever special techniques or connections are required.

E.5.3.2.3.4.1 Assembly of equipment.

a. Instructions shall be prepared for assembling equipment that has been shipped unassembled. When the equipment is to be shelf or rack mounted, instructions shall also be prepared for assembly of the rack, if necessary, and installation of the equipment in the rack. As applicable, power requirements, connections, and initial control settings needed for installation purposes shall be included.

b. When the equipment is shipped or delivered in specially designed containers, unpacking instructions shall be prepared. If the containers are to be used again, kept for future use, turned in to supply, or require a special disposition method, the necessary procedures to restore the containers shall be included.

c. For security measures for electronic data, instructions shall be prepared for handling, loading, purging, overwriting, or unloading classified electronic data under usual conditions. Instructions shall meet current security regulations as they pertain to automation security.

E.5.3.2.3.4.2 Installation of the equipment.

a. Installation instructions shall be prepared for all of the following actions (including placing, mounting, and attaching).

(1) Cable and wiring interconnections.

(2) Proper use of special tools.

b. Installation instructions shall identify all dimensions that must be maintained in placing, mounting, or attaching items.

c. When initial adjustments can be made efficiently during installation, such adjustments shall be included.

d. For equipment designed and intended for use in more than one type of installation (e.g., field, fixed station, and mobile), instructions shall be prepared for each type of installation involved.

Source: https://assist.dla.mil -- Downloaded: 2016-12-05T17:12Z
Check the source to verify that this is the current version before use.

e. If performance of any step in the installation instructions requires the assistance of personnel from a higher level of maintenance, this shall be stated in a note similar to that below.

"**NOTE**

The following installation procedure must be made with the assistance of (*insert level*) maintenance personnel (include Military Occupational Specialty (MOS), if applicable)."

f. Installation instructions shall be considered complete only when they include instructions for:
   (1) All required installation options (e.g., Electrostatic Discharge (ESD) control requirements).
   (2) Accessory items.
   (3) Auxiliary items (those that extend or increase equipment capability).
   (4) Grounding of the equipment for both safety and proper operation.
   (5) Torque requirements.

E.5.3.2.3.4.3 Special applications. Installation instructions, which are common to all special applications of a system, shall be prepared. Details resulting from the installation but peculiar only to the equipment into which the system is being installed shall be omitted (e.g., special treatment required when installing the system in a vehicle or aircraft).

E.5.3.2.3.4.4 Van and shelter installations. The following information shall be prepared only to the extent required for the applicable level of maintenance.

a. Instructions shall be prepared for the removal and replacement of each nonpermanent unit.
b. Installation instructions shall not be prepared when the equipment is permanently installed in vans or shelters.
c. Diagrams and instructions shall be prepared which pertain to electrical and interconnection wiring, exclusive of wiring peculiar to the equipment on which the installation is being made (e.g., headlight, ignition wiring).
d. Instructions shall be prepared for cable run locations, equipment locations, circuit breaker panels, and other similar details.

E.5.3.2.3.5 Preliminary servicing of equipment **<preserv>**. Instructions for all lubrication required on newly installed equipment shall be prepared.

E.5.3.2.3.6 Preliminary checks and adjustment of equipment **<prechkadj>**. Instructions for all checks and adjustments to be made on newly installed equipment shall be prepared. Information on the location of items such as controls and check points shall be prepared or referenced. Instructions shall be prepared for checks and adjustments that must be made before equipment is put into operation and for all other checks required to ensure proper operation of the equipment. These instructions shall include the following, as applicable:

a. Checks for interconnections.
b. Checks for grounding, including earth ground connections, earth conditioning for conduction, as well as a check of the grounding circuit for negligible resistance.

Source: https://assist.dla.mil -- Downloaded: 2016-12-05T17:12Z
Check the source to verify that this is the current version before use.

c. Checks for adequate clearance for rotating or moving devices.
d. Checks of initial settings of all controls that must be preset before power is to be applied.
e. All other checks needed to determine that power can be applied without injuring personnel or damaging the equipment.
f. Firm seating and connection of all plug-in parts, mating connectors, jacks, and plugs.
g. Cable and wire harness routing, dressing, and fastening.
h. Cautions against damaging transistors, diodes, and other electrically sensitive items.
i. Replacement of all covers, inspection and access doors, and plates.
j. Operation of safety interlocks and switches.
k. Operation of ventilating louvers and intake and exhaust ports.
l. Operation and content of liquid cooling systems.
m. Lubricants and Corrosion Prevention Control (CPC) procedures.
n. Switch and control settings that are preset at installation (installer's adjustments).
o. Presetting and adjustment of automatic controls.
p. Terminal connections.
q. Required terminal or capacitor strapping.
r. Preliminary test measurements.
s. Presetting operator's controls.
t. Normal operating checks.
u. After-installation orientation.
v. Burn-in of parts.
w. ESD control standards.
x. After operations, shutdown, checks, and inspections.

E.5.3.2.3.7 Preliminary calibration of equipment <**precal**>. Instructions for all calibration to be made on newly installed equipment shall be prepared.

E.5.3.2.3.8 Circuit alignment <**calign**>. Instructions shall be prepared for circuit alignment procedures. Applicable instructions shall be prepared in the following order.

a. External connections <**extconn**>. Connections to external lines required for each installation option shall be included. Connection instructions shall conform to the requirements for installing wiring and cabling interconnections.
b. Switch settings, patch panel connections, and internal control settings <**setconn**>. Instructions shall be prepared for all switch settings, patch panel connections, and internal control settings required for each installation option and mode of operation.
c. Alignment procedures <**alignproc**>. Instructions shall be prepared for all alignment procedures, including any variations required for different installation options and modes of operation.

Source: https://assist.dla.mil -- Downloaded: 2016-12-05T17:12Z
Check the source to verify that this is the current version before use.

E.5.3.2.3.9 Ammunition service upon receipt tasks. Procedures shall be prepared for performing visual inspection of ammunition received from the ammunition supply facility. This inspection shall include verification that ammunition received was that requisitioned. Instructions shall be prepared for a condition check of the shipment (pallets, containers, boxes, and legibility of markings). Instructions shall be prepared to note the quantity of each lot for recording purposes.

E.5.3.2.3.9.1 Ammunition markings **<ammo.markings>**. Instructions shall be prepared for marking ammunition and ammunition containers.

E.5.3.2.3.9.2 Classification of defects **<ammo.defect>**. Procedures shall be prepared for performing visual inspection of ammunition/containers (pallets, boxes, etc.) and shall include classification and disposition of defective ammunition/containers.

E.5.3.2.3.9.3 Handling **<ammo.handling>**. Procedures shall be prepared for handling ammunition.

a. Unpacking **<ammo.unpacking>**. As a minimum, the following information shall be prepared.
   (1) Any special sequence of action necessary to protect the ammunition.
   (2) If a special design reusable container is involved for either the end item or components, which are authorized for replacement, instructions shall be prepared to report or reenter the empty container through supply channels.
   (3) Man-hour requirements and total man-hours required for unpacking the ammunition.
b. Packing **<ammo.packing>**. As a minimum, the following information shall be prepared.
   (1) Any special sequence of action necessary to protect the ammunition.
   (2) Instructions shall be prepared on how to package defective ammunition.
   (3) Man-hour requirements and total man-hours required for packing the ammunition.

E.5.3.2.3.9.4 Procedures needed to activate ammunition, mine, etc. **<arm>**. Procedures shall be prepared for activation of ammunition, mines, etc., preparatory to detonation.

E.5.3.2.3.10 Other service upon receipt task **<other.surtsk>**. Additional service upon receipt task may be developed when the specific type of service upon receipt tasks are not covered as described in E.5.3.2.3.1 through E.5.3.2.3.9.4. If additional service upon receipt tasks are used, proponent shall submit to LOGSA the requirements for this service upon receipt task type for possible incorporation within future revisions to this standard.

E.5.3.2.3.11 Follow-on maintenance **<followon.maintsk>**. See E.5.3.5.3.31 for requirements.

E.5.3.3 Equipment / user fitting instructions work package **(Field or above only) <perseqpwp>**. As applicable, equipment/user fitting instructions for personal use equipment shall be prepared.

a. Work package identification information **<wpidinfo>** is required for this work package (refer to 4.8.6.1).
b. Initial setup information **<wpinfo>** is required for this work package (refer to 4.8.6.1.1).

Source: https://assist.dla.mil -- Downloaded: 2016-12-05T17:12Z
Check the source to verify that this is the current version before use.

E.5.3.4 Preventive maintenance checks and services (PMCS) (Not required for aircraft TMs, DMWR and NMWR). The PMCS shall be prepared and based upon the principles of Reliability Centered Maintenance (RCM) logic and shall include PMCS information and applicable scheduled corrosion inspections. Lubrication instructions may be included in the PMCS information or a seprate lubrication order may be prepared. An introduction WP for PMCS shall also be prepared.

E.5.3.4.1 PMCS introduction work package **<pmcsintrowp>**. This work package shall explain the purpose and use of the PMCS data.

E.5.3.4.1.1 Work package identification information **<wpidinfo>**. Work package identification information is required for this work package (refer to 4.8.6.1).

E.5.3.4.1.2 Initial setup information **<wpinfo>**. Initial setup information is not required for this work package.

E.5.3.4.1.3 PMCS data.

a. An explanation shall be prepared for each PMCS entry and any general checks/services that are common to the entire piece of equipment. The explanation for the item numbers shall detail how the item numbers are used when recording results of PMCS on DA Form 2404, Equipment Inspection and Maintenance Worksheet.
b. If lubrication instructions are included in the PMCS data, general statement(s) shall be prepared which apply to the overall understanding of lubrication requirements.
c. If lubrication instructions are included in the PMCS data, lubricants shall be identified by standard military symbols in accordance with MIL-HDBK-113 and MIL-HDBK-275. The following lubrication interval symbols shall be used, as applicable.

D daily	B biennially
W weekly	H hours (operated)
M monthly	MI miles (operated)
Q quarterly	KM kilometers (operated)
S semiannually	RDS rounds fired
A annually	OC on-condition
MRA maintenance repair action	

d. A statement concerning Corrosion Prevention and Control (CPC) shall be prepared. This statement shall contain maintenance instructions or reference CPC requirements contained in the applicable maintenance instructions. In addition, if the inclusion of such instructions are applicable, a statement shall be prepared which states that the instructions are mandatory.

Source: https://assist.dla.mil -- Downloaded: 2016-12-05T17:12Z
Check the source to verify that this is the current version before use.

(1) Oil filter statement. As applicable, the following statement shall be included verbatim:

"Oil filters shall be serviced/cleaned/changed, as applicable, when:

They are known to be contaminated or clogged,

Service is recommended by AOAP laboratory analysis, or

At prescribed hardtime intervals."

(2) AOAP sampling interval statement. The following statement shall be inserted:

"Engine oil/transmission oil/hydraulic fluids must be sampled at (insert applicable hour/mileage time frame) as prescribed by (insert DA PAM 738-751, Functional Users Manual for the Army Maintenance Management Systems - Aviation (TAMMS-A) or DA PAM 750-8, The Army Maintenance Management System (TAMMS) Users Manual)."

(3) AOAP not available/non-enrolled statement. When a component/equipment is not enrolled in the AOAP or oil analysis support is not available, the following statement shall be inserted:

"This (*enter name of component/equipment*) is not enrolled in the Army Oil Analysis Program. HARDTIME INTERVALS APPLY."

(4) Warranty hardtime statement. The following statement shall be used, as applicable:

"For equipment under manufacturer's warranty, hardtime oil service intervals shall be followed. Intervals shall be shortened if lubricants are known to be contaminated or if operation is under adverse conditions (such as longer-than-usual operating hours, extended idling periods, extreme dust)."

e. When the equipment contains fluids, such as lubrication oil or hydraulic fluid, leakage criteria shall be prepared for the PMCS introduction as follows and referred to in the NOT READY/AVAILABLE IF: column.

"**FLUID LEAKAGE**

It is necessary for you to know how fluid leakage affects the status of the (enter component/equipment name). Following are types/classes of leakage you need to know to be able to determine the status of the (enter component/equipment name). Learn these leakage definitions and remember - when in doubt, notify your supervisor. Equipment operation is allowed with minor leakage (Class I or II). Consideration must be given to fluid capacity in the item/system being checked/inspected. When in doubt, notify your supervisor.

When operating with Class I or II leaks, continue to check fluid levels as required in the PMCS.

Class III leaks should be reported immediately to your supervisor.

(1) Class I Seepage of fluid (as indicated by wetness or discoloration) not great enough to form drops.

Source: https://assist.dla.mil -- Downloaded: 2016-12-05T17:12Z
Check the source to verify that this is the current version before use.

(2) Class II Leakage of fluid great enough to form drops but not enough to cause drops to drip from item being checked/inspected.

(3) Class III Leakage of fluid great enough to form drops that fall from item being checked/inspected."

E.5.3.4.2 PMCS work package <**pmcswp**>.

E.5.3.4.2.1 Work package identification information <**wpidinfo**>. Work package identification information is required for this work package (refer to 4.8.6.1).

E.5.3.4.2.2 Initial setup information <**wpinfo**>. Initial setup information is required for this work package (refer to 4.8.6.1.1).

E.5.3.4.3 PMCS procedures. The PMCS procedures shall include the checks and services data described in E.5.3.4.3.1 and when specified by the acquiring activity, an illustration of the equipment shall be included. See MIL-HDBK-1222 for example of PMCS information. This illustration shall include a routing diagram by which the PMCS will be performed.

E.5.3.4.3.1 PMCS data preparation <**pmcstable**>. PMCS data shall consist of the entries described below. These checks and services data entries shall be in the form of **standard information** (refer to MIL-HDBK-1222 for example of PMCS data **standard information**).

a. Item number <**itemno**>. Item numbers (ITEM NO.) shall be assigned to the PMCS procedures. The PMCS procedures shall be arranged in a logical sequence requiring minimum time and motion on the part of the person(s) performing them and shall be so arranged that there will be minimum interference between persons performing the checks simultaneously on the same end item.

b. Intervals <**interval**>. The designated interval (INTERVAL)(i.e., "before", "during", "after", "weekly", etc.) when each check is to be performed shall be included. Procedures done first or most frequently (i.e., "before" checks and services) shall appear prior to "during" and "after" checks and services. When more advantageous to the user, intervals shall be subgrouped by crewmember(s). The "core" PMCS intervals which can be used are as follows:

Before

During

After

Daily

Weekly

Monthly

Quarterly

Semiannually

Annually

Periodic

Intermediate **(Aviation only)**

Source: https://assist.dla.mil -- Downloaded: 2016-12-05T17:12Z
Check the source to verify that this is the current version before use.

Manhour/day **(Aviation only)**

Phased **(Aviation only)**

Other

c. Man-hours **<manhours>**. When specified by the acquiring activity man-hours (MAN-HOUR) required to complete all prescribed lubrication services shall be included. Man-hours shall be stated to the nearest 10th of an hour.

d. Item to be checked or serviced **<checked>**. The items listed (ITEM TO BE CHECKED OR SERVICED) shall be identified in as few words as possible to clearly identify the item. Usually the common name (e.g., bumper, gas can and mounting bracket, front axle, etc.) will be enough.

e. Procedures **<pmcsproc>**. The procedure (PROCEDURE) by which each check is to be performed, as well as any information required to accomplish each check or service, including lubrication, appropriate tolerances, adjustment limits, and instrument gage readings shall be provided. Illustrations shall be prepared to identify the location or the process of the task being performed and shall be integrated with the procedures. Whenever replacement or repair is recommended, the maintenance task shall be included or the applicable maintenance instruction work package may be referenced. Any periodic/scheduled lubrication procedures required for the equipment may be included in the PMCS procedures and when included shall meet the following requirements:

(1) Lubrication procedures shall be prepared including information on authorized lubricants, lubrication intervals, man-hour requirements, and the AOAP. Lubrication instructions shall be prepared so as to enable the user to receive, lubricate, and return to an acceptable performance standard all components of the equipment in a minimum of time with the skills, tools, test equipment, and spare parts authorized by the LMI, or MAC. Information shall be included for any special lubrication required under extreme temperature, altitude, and humidity conditions within the limits established by the design specification for the equipment.

(2) Lubricant types and abbreviations for flight vehicles and components shall be identified by standard military symbols as specified in MIL-HDBK-275; lubricant types and abbreviations for ground equipment systems, lubricants, functional fluids, preservatives, and specialty products shall be identified by standard military symbols in accordance with MIL-HDBK-113. (Required abbreviations not covered in the appropriate handbook will be provided by the acquiring activity.)

(3) Lubrication instructions shall include all applications, procedures, lubricants, and lubrication points. When grouped lubrication points require the same lubricant at the same interval, the type and number of points shall be identified and described by one of the following methods.

(a) Multi-headed arrows. Multi-headed, solid-shafted arrows shall point to each of the lubrication points.

Source: https://assist.dla.mil -- Downloaded: 2016-12-05T17:12Z
Check the source to verify that this is the current version before use.

(b) Lubrication point notes. Lubrication point notes shall contain instructions for applying lubricants, taking into account the following factors: type, grade, availability, and properties of the prescribed lubricant; expected temperature; lubrication guns and tools available to authorized maintenance level; types of lubrication fittings; and possible ill effects of excessive or insufficient lubrication. Caution shall be stressed where over- or under-lubrication of a part will damage that part or closely associated parts.

(4) Disassembly and hand-packing instructions shall be prepared for medium- and high-speed antifriction bearings that are sensitive to the amount of lubrication applied and do not have bleed holes or relief valves.

(5) Cleaning, disassembling, and assembling instructions required before or after lubrication shall be prepared or referenced.

(6) Instructions shall be prepared for washing and natural drying of finely machined and dirt-sensitive parts before relubricating. Use of compressed air jets or temperatures above 212° F shall not be prescribed.

(7) Instructions shall not specify a coating of preservative material, either before or after packing parts that are lubricated with grease; nor shall they specify an application of oil, solvent, or additional grease to a "sealed-for-life" or prepackaged antifriction bearing.

(8) Where applicable, the statement "For Arctic operation, refer to FM 9-207, Operation and Maintenance of Ordnance Materiel in Cold Weather (0º to –65º F)." shall be inserted as a note. When specific restrictions, preferred grades of lubricant, and other conditions exist, notes shall be made. For example,

"**NOTE**

When MIL-L-2104 lubricant is authorized, use 15W-40 (OE/HDO-15/40) when available and applicable temperature range exists."

or

"**NOTE**

15W-40 oil is not authorized in this particular (*enter component name*)."

f. Equipment not ready/available if: **<eqpnotavail>**. A brief statement of the condition (EQUIPMENT NOT READY/AVAILABLE IF:)(e.g., malfunction, shortage) that would cause the equipment to be less than fully ready to perform its assigned mission shall be provided. If the procedure contains detail steps the statement shall be placed opposite the applicable step.

E.5.3.4.3.2 Mandatory replacement parts **<mrplpart>**. All items that must be replaced during PMCS whether they have failed or not shall be identified.

a. When mandatory replacement parts are required, the information entries shall be placed in a table (refer to FIGURE E-1). The table shall follow the PMCS.

(1) Interval <**title**>

(2) Item number <**itemno**>

Source: https://assist.dla.mil -- Downloaded: 2016-12-05T17:12Z
Check the source to verify that this is the current version before use.

(3) Part number <**partno**>/Commercial and Government Equipment Code (CAGEC) <**cageno**>

(4) National stock number (NSN) <**nsn**>

(5) Nomenclature **<name>**

(6) Quantity <**qty**>

b. If there are no mandatory replacement parts for your PMCS, the following statement shall be included in lieu of parts information:

"There are no replacement parts required for these PMCS procedures."

E.5.3.4.4 Preventive Maintenance Checklist **(PMC) (operator only)**. When specified by the acquiring activity, a PMC shall be prepared as a separate document. Information for a PMC shall come from the applicable operator's PMCS.

E.5.3.5 Maintenance work packages **(Not required for aircraft PM and PMS manuals only) <maintwp>**. Maintenance information shall be prepared and functionally divided into individual maintenance work packages **<maintwp>**. The technical content structure for these work packages shall be consistent from work package to work package. Illustrations shall be prepared to identify the location or the process of the task being performed and shall be integrated with the procedures.

a. Each maintenance work package shall include all authorized maintenance tasks **<maintsk>**. Tasks shall consist of complete start-to-finish maintenance procedures in a logical sequence of occurrence. Task titles **<title>** shall be identical to FGC titles as used in the applicable MAC and parts information. Maintenance tasks are described in E.5.3.5.3.

b. Maintenance instructions shall reference or contain all procedures required for any unusual or critical steps such as specifying Quality Assurance (QA) checks (**depot and aviation only**), care and handling of ESD sensitive items and all hazardous material (e.g., ammunition, radioactive components or materials, including prevention of deterioration due to rough handling, exposure to adverse weather conditions, or other hazards). Visual inspection and safety criteria shall be prepared to determine item serviceability. Instructions shall also contain procedures for disposition of defective ammunition. Procedures shall be prepared for use of cleaning materials and paint authorized for use in the specified maintenance operations. Tools shall be described only when the tool or procedure is peculiar or abnormal.

c. When peculiar to the equipment, applicable Corrosion Prevention and Control (CPC) procedures shall be included, or the work package shall reference applicable CPC publications.

d. National Stock Numbers (NSNs) shall not be used in procedural steps, illustrations, or legends of maintenance work packages.

e. Part numbers shall not be used in procedural steps, illustrations, or legends, except when essential for identification.

f. Aviation maintenance TMs shall reference procedures in TM 1-1500-204-23, as applicable.

Source: https://assist.dla.mil -- Downloaded: 2016-12-05T17:12Z
Check the source to verify that this is the current version before use.

g. The maintenance instructions shall be prepared to include required environmental control data and information. Instructions shall be prepared for information on any special maintenance required under extreme temperature, altitude, and humidity conditions within the limits established by the design specification for the equipment.

h. (**DMWRs/NMWRs only**) A Reliability, Availability, and Maintainability (RAM) table shall be prepared listing the pertinent measurable RAM ranges for the major overhauled components (refer to FIGURE E-2). The RAM requirements shall be prescribed by maintenance engineering of the acquiring activity and when established by maintenance engineering shall include critical measurement factors, such as Meantime Between Failures (MTBF), Meantime Between Corrective Maintenance (MTBCM), Maximum Time to Repair (MTTR), availability, and maintenance ratio. The reliability and availability portion of the table shall give the minimum acceptable values while the maintainability portion shall provide the maximum allowable rates. Availability may be expressed as a probability versus a qualified number. When specified by maintenance engineering of the acquiring activity, the RAM information may be prepared in a narrative format (refer to FIGURE E-2).

E.5.3.5.1 Work package identification information **<wpidinfo>**. Work package identification information is required for this work package (refer to 4.8.6.1).

E.5.3.5.2 Initial setup information **<wpinfo>**. Initial setup information is required for this work package (refer to 4.8.6.1.1).

E.5.3.5.3 Maintenance tasks **<maintsk>**. Maintenance tasks shall be prepared for each authorized maintenance level in the general order listed below. A sample maintenance procedure is provided in MIL-HDBK-1222. For each maintenance task, illustrations shall be used to support or clarify the text, including schematics, wiring diagrams, parts location drawings and other visual aids.

Assembly and preparation for use (**aviation only**) **<prepforuse>**

Servicing **<service>**

Ground handling **<groundtsk>**

Inspection of installed items **<inspinstitm>**

Removal **<remove>**

Disassembly **<dissassem>**

Cleaning **<clean>**

Inspection-acceptance and rejection criteria **<acptrejinsp>**

Nondestructive Testing Inspection (NDTI) **<ndti>**

Repair or replacement **<repair-rplc>**

Alignment **<align>**

Painting **<paint>**

Lubrication **<lube>**

Assembly **<assem>**

Source: https://assist.dla.mil -- Downloaded: 2016-12-05T17:12Z
Check the source to verify that this is the current version before use.

Test and inspection **(Field, Below Depot, & ASB only) <test-inspect>**

Installation **<install>**

Adjustment **<adjust>**

Calibration **<calibration>**

Radio interference suppression **<ris>**

Placing in service **<pis>**

Testing **<test-pass>**

Preservation, packaging, and marking (**DMWR/NMWR only**) **<ppm>**

Overhaul and retirement schedule (**aircraft only**) **<orsch>**

Preparation for storage or shipment **<pss>**

Ammunition markings **<ammo.markings>**

Classification of ammunition defects **<ammo.defect>**

Handling ammunition **<ammo.handling>**

Procedures for ammunition activation **<arm>**

Additional maintenance task **<other.maintsk**>

Follow-on maintenance **<followon.maintsk>**

E.5.3.5.3.1 Maintenance task requirements. Additional mandatory or unique technical information or additional explanations may be required to be included in the maintenance tasks listed in E.5.3.5.3, above. This information is described in E.5.3.5.3.2 through E.5.3.5.3.31. The following general requirements apply to most of the maintenance tasks in E.5.3.5.3, above.

a. Peculiar instructions shall be prepared for lockwiring, installing cotter pins, use of sealing compounds, lubricants, or corrosion prevention compounds and similar operations with applicable references to the expendable and durable items list.
b. Procedures shall not be prepared for separation of bonded, press-fitted, soldered, welded, or riveted parts, or the removal of electronic circuitry parts, unless such removal is necessary to clean, inspect, or test separately.
c. If servicing (i.e., pressurizing and charging with gas, lubrication, etc.) is required upon completion of a maintenance task, include this information as part of the task.
d. Warnings and cautions shall be included whenever chemicals or cleaning compounds are used or combined which may result in a dangerous or hazardous mixture. Whether the danger is to personnel or equipment, it shall be identified and the effect (e.g., gases, fumes, caustic, and fire) shall be stated.
e. For aircraft, instructions shall be prepared for cleaning and washing the entire aircraft. Instructions shall be prepared for the removal of the battery, relief tube, power plant, and armament exhaust deposits, or other items or material as necessary. Instructions shall also be prepared regarding components which require relubrication after the aircraft has been washed or steam cleaned.

Source: https://assist.dla.mil -- Downloaded: 2016-12-05T17:12Z
Check the source to verify that this is the current version before use.

f. Torque requirements, values, and sequences shall be indicated. Only critical torques **<torque>** shall be indicated in task steps. All noncritical torques will be covered by the Torque Limits work package and a reference thereto. Torque values shall be given for all structural attaching hardware, fluid couplings (fuel, oil, hydraulic, pneumatic, etc.), and connections. Torque values shall include torque correction factors when crowfoot extensions, thread lubricants, and cadmium-plated screws or nuts are used. Torque values identified in the tasks must reflect torque wrenches authorized to personnel targeted to perform tasks. Upon completion of torque action, instructions shall be prepared on use of an orientation mark (striping).

g. Such terms as “reverse the disassembly procedures” or “installation is the reverse of removal” shall not be used in any maintenance task.

h. Maintenance procedures or steps that have a major quality assurance effect shall be preceded by a statement such as “QA check”, to identify them.

i. **(DMWRs/NMWRs only)** For items that have parts with specific characteristics, wear limits, specified performance requirements, or fatigue characteristics or tolerances, overhaul inspection procedures (OIP), shall be included, in any applicable maintenance task. The OIP shall consist of the characteristics being inspected for, inspection methods, and the acceptance/reject criteria that must be met. For characteristics having a major quality assurance effect, a statement such as “QA check” shall be placed immediately preceding the characteristic to which it applies. Unless otherwise specified by the acquiring activity, an illustration shall accompany the OIP. Illustrations for OIPs are strongly encouraged and shall only be omitted for very simple systems/parts. A reference letter may be included on the illustration to aid in locating the critical inspection characteristics of the parts. The OIPs shall be placed immediately after the maintenance step for which it applies. When a maintenance task contains an excessive number of parts requiring OIPs, the OIPs may take the form of a consolidated table or list. A separate OIP table or list shall be provided for each part of the item that requires a critical inspection. OIP tables may be placed in a separate WP (refer to E.5.3.8.2). If separate OIP WPs are developed, they shall be referenced within the procedural step where they apply.

E.5.3.5.3.2 Assembly and preparation for use **(aviation only) <prepforuse>**.

a. Procedures shall be prepared for unpacking, assembly, and installation. When the equipment is shipped or delivered in specially designed containers, unpacking instructions shall be prepared. If the containers are to be used again, kept for future use, turned in to supply, or require a special disposition method, the necessary procedures for reassembly of the container shall be prepared. These instructions shall be supported by illustrations. As applicable, power requirements, connections, and initial control settings needed for installation purposes shall be prepared.

b. For security measures for electronic data, instructions shall be prepared for handling, loading, purging, overwriting, or unloading classified electronic data under usual conditions. Instructions shall meet current security regulations as they pertain to automation security.

Source: https://assist.dla.mil -- Downloaded: 2016-12-05T17:12Z
Check the source to verify that this is the current version before use.

E.5.3.5.3.3 Servicing **<service>**.

a. Instructions shall be prepared for replenishment of fuel; oil; hydraulic or other fluids; oxygen, nitrogen, other gases; and tire pressure, plus any other such items and materials (except for lubricants) required for complete servicing of the equipment.
b. Servicing instructions shall be supplemented with a diagram showing locations of regular and emergency servicing points. Items located on each side of the equipment which require servicing will be illustrated and identified as right and left side. NO STEP areas on walkways leading to any tank (in an aircraft) shall be indicated and necessary cautions included.
c. All expendable and durable items used in the servicing instructions shall be referenced and contained in the expendable and durable items list (refer to G.5.6) by military and federal standard nomenclature, part number (MIL-STD), and CAGEC. A servicing diagram shall be referenced or included to support the procedures when required.
d. The warnings and cautions to observe in servicing a particular tank or reservoir (e.g., grounding and prevention of fire hazards) shall be stated clearly.
e. Instructions shall be prepared regarding access to any out-of-the-way or unusual places requiring service.

E.5.3.5.3.4 Ground handling **<groundtsk>**. Descriptions, instructions, and necessary cautions and warnings for ground handling of the aircraft/equipment, including any information needed in extreme cold, heat, humidity, dust, or other unusual or extreme conditions shall be prepared. Instructions for folding and unfolding appropriate parts such as rotor blades or wings, rudders, and fans shall also be included. For aircraft, instructions shall be prepared that are required for blocking and supporting the aircraft during performance of the operation or procedure involved. The following ground handling procedures shall be provided.

a. Towing **<tow>**.
b. Jacking **<jack>**.
c. Parking **<park>**.
d. Mooring **<moor>**.
e. Covering **<cover>**.
f. Hoisting **<hoist>**.
g. Sling loading **<sling>**.
h. External power **<extpwr>**.

E.5.3.5.3.5 Inspection of installed items **<inspinstitm>**. Instructions shall be prepared for inspection of components, assemblies, or parts installed on the equipment. Procedures shall indicate that inspection will be performed with the item in its normally installed position or condition, considering accessibility and visibility of the item being inspected. The purpose of the inspection (to determine if the item is damaged, deteriorated, or incomplete to the extent that it should be replaced or repaired) shall be stated. Procedures shall be prepared for inspecting solder joints on an electronic item, welds on an armored vehicle, fluid leakage on vehicles, connectors on electronic devices, and other items to identify defects that must be corrected.

Source: https://assist.dla.mil -- Downloaded: 2016-12-05T17:12Z
Check the source to verify that this is the current version before use.

E.5.3.5.3.6 Removal **<remove>**.

a. Instructions shall be prepared in the logical removal sequence prescribed by the FGC. Illustrations shall be used to support and clarify the text. Instructions shall be prepared for checking and recording gear wear patterns, backlash, ESD protective control measures, measurements and tolerances for determining thickness of shims and purpose for shims, and separating and indexing parts for the assembly. Procedures shall identify items which must be matched or precision mated when installed at a later time.

b. **(DMWR/NMWR only)** Instructions shall be prepared for recording the condition of the item/assembly, marking, handling, and storing the item.

E.5.3.5.3.7 Disassembly **<disassem>**. Instructions shall be prepared for disassembly of components, assemblies, or subassemblies to the extent specified by the MAC and SMR coded items. Illustrations shall be used to support and clarify the text. Instructions shall be prepared for precision matched or mated components, assemblies, subassemblies, or parts (other than common hardware), including ESD sensitive items, to insure they will be marked, handled, and stored to preclude damage and to ensure assembly and installation in their matched positions.

E.5.3.5.3.8 Cleaning **<clean>**. Cleaning procedures, methods, special equipment, and materials that are required shall be specified. Instructions shall be prepared for corrosion prevention treatment of metal parts after cleaning.

a. All materials used in the cleaning and corrosion prevention of equipment, components, or parts shall be referenced and contained in the expendable and durable items list (refer to G.5.6).

b. Cleaning materials used for the cleaning of systems, subsystems, and components in order to prepare them for painting, bonding, applying sealants or adhesives, and the removal thereof shall be Hazardous Air Pollutant (HAP) Free. The use of HAP containing cleaner (s) is considered a serious risk to human health and the environment due to potential impacts on installations that are required to perform the specific cleaning tasks. If a HAP containing cleaner(s) must be used due to performance/technical requirements, then is shall be formally approved by the risk acceptance authority for serious-level risks. as identified in the System Safety proram and MIL-STD-882.

c. Procedures shall include cautions to avoid damage of components and to prevent the entrance of water or other solvents into electrical components, ducts, or like openings.

d. Warnings and cautions shall be prepared whenever chemicals or cleaning compounds are used or combined which may result in a dangerous or hazardous mixture. Whether the danger is to personnel or equipment shall be identified and the effect (e.g., gases, fumes, caustic, and fire) shall be stated.

e. For aircraft, detailed instructions shall be prepared for cleaning and washing the entire aircraft. Instructions shall be prepared for the removal of the battery, relief tube, power plant, and armament exhaust deposits, or other items or material as necessary. Instructions shall also be prepared regarding components which require relubrication after the aircraft has been washed or steam cleaned.

Source: https://assist.dla.mil -- Downloaded: 2016-12-05T17:12Z
Check the source to verify that this is the current version before use.

E.5.3.5.3.9 Inspection-acceptance and rejection criteria <**acptrejinsp**>.

a. Inspection requirements shall be prepared to include acceptance and rejection information sufficient to determine that new, repaired, and used components, assemblies and subassemblies conform to wear limits, fits, and tolerances established.

b. (**DMWR/NMWR and aviation only**) Inspection procedures that have a quality impact shall be highlighted. This can be done using a statement such as "QA check" preceding the procedure or by any other means that would emphasize quality assurance. Instructions shall be prepared for tagging all rejected parts, other than mandatory replacement parts, and listing the reasons for rejection. Visual inspection procedures shall be prepared to detect defects such as burrs, cracks, bends, or dents. Accurate and measurable accept or reject requirements and standards shall be prepared which allow the user to determine if the item under inspection conforms to the tolerances, wear limits, fit, or other standards and requirements presented.

E.5.3.5.3.10 Nondestructive Testing Inspection (NDTI) <**ndti**>.

a. (**Aircraft only**) When specified by the acquiring activity, TM 1-1500-335-23 shall be the only NDTI document referenced in the NDTI procedures, and technical provisions of this TM shall be followed.

b. (**Aircraft only**) Individual NDTI procedures shall be specified for each part requiring NDTI. In order to satisfy this requirement, the following shall be prepared for aircraft TMs.

   (1) If penetrant is required, identification of the particular TM 1-1500-335-23 process that is applicable.

   (2) If magnetic particle inspection is required, the specific TM 1-1500-335-23 method, the type of magnetization, and amount of current or ampere turns.

c. The reject criteria shall be specified in all cases. This shall be done by means of a blanket statement, individual criteria for a part, or a combination of both.

d. Instructions for use of visible dye penetrants shall not be included as part of NDTI instructions unless specified otherwise by the proponent activity. When required, refer to TM 1-1500-335-23 for preparation of those instructions.

e. When several NDTI methods are permitted, the relative order of preference shall be specified.

f. Instructions shall be prepared for removing primer and/or paint for TMs that require the removal process as part of NDTI procedures. If a part requires a special process, this procedure must be contained within the NDTI procedure for that part.

g. Cleaning requirements prior to, during, and after NDTI shall be specified. If a part has a built-in bearing, then a procedure shall be prepared to ensure protection of the bearing for the NDTI procedure.

E.5.3.5.3.11 Repair or replacement <**repair-rplc**>. Instructions shall be prepared for repair or replacement to restore an item to a completely serviceable or fully mission capable status.

E.5.3.5.3.12 Alignment <**align**>. Detailed instructions shall be prepared for alignment procedures to adjust specified variable elements of an item to bring about optimum or desired performance.

Source: https://assist.dla.mil -- Downloaded: 2016-12-05T17:12Z
Check the source to verify that this is the current version before use.

E.5.3.5.3.13 Painting **<paint>**. Instructions shall be prepared for required painting, refinishing, and marking of assembled components, assemblies, subassemblies, or end item. Reference may be made to TM 55-1500-345-23, TM 1-1500-204-23, SB 11-573,TB 43-0209, TB 43-0118, TM 43-0139, or others as appropriate.

E.5.3.5.3.14 Lubrication **<lube>**.

a. Pertinent mandatory lubrication instructions, CPC procedures, and general lubrication instructions not contained elsewhere shall be prepared and appear here.
b. (**DMWR/NMWR and aviation only**) Lubrication procedures which have a major quality assurance effect shall be immediately preceded by a statement such as "QA check" to identify them.

E.5.3.5.3.15 Assembly **<assem>**. Step-by-step procedures shall be prepared for assembling items disassembled or removed that make up the components, assemblies, or subassemblies. Illustrations shall be used to support and clarify the text.

a. Instructions shall be prepared for assembling precision-matched or mated parts marked during disassembly.
b. Instructions shall be prepared for checking and recording gear wear patterns, backlash, shimming requirements, and the indexing of parts to ensure proper alignment during assembly. The purpose of shims shall be given, (e.g., adjust backlash, prevent metallurgical reaction, etc.).
c. Torque requirements, values, and sequences shall be indicated. Only critical torques **<torque>** shall be indicated in task steps. All non-critical torques will be covered by the Torque Limits work package (refer to E.5.3.10). Torque values shall be given for all structural attaching hardware, fluid couplings (fuel, oil, hydraulic, pneumatic, etc.), and connections. Torque values shall include torque correction factors when crowfoot extensions, thread lubricants, and cadmium-plated screws or nuts are used. Torque values identified in the tasks must reflect torque wrenches authorized to personnel targeted to perform tasks. Upon completion of torque action, instructions shall be prepared on use of an orientation mark (striping).
d. Instructions such as "reverse the disassembly procedure," shall not be used.
e. ESD standards, ESD sensitive items along with the protective and control measures to be taken, and CPC procedures shall be identified.
f. (**DMWR/NMWR and aviation only**) Assembly procedures which have a major quality assurance effect shall be preceded by a statement such as "QA check" to identify them.

E.5.3.5.3.16 Test and inspection **<test-inspect>**. Procedures shall be prepared for testing and inspection during or after assembly to ensure proper assembly of the item. Correct methods of testing; procedures for making tolerance checks; and procedures for inspection of distance measurements (e.g., clearance, end play, backlash) shall be prepared. Measurement criteria and tolerances shall reflect the Test Measurement and Diagnostic Equipment (TMDE) available to the user. For Depot and aviation only, test and inspection procedures which have a major quality assurance effect shall be preceded by a statement such as "QA check" to identify them.

Source: https://assist.dla.mil -- Downloaded: 2016-12-05T17:12Z
Check the source to verify that this is the current version before use.

E.5.3.5.3.16.1 Inspection and test of conventional and chemical ammunition or components containing radioactive materials **(Field, Below Depot Sustainment, and ASB only) <test-inspect>**. The following information shall be prepared.

a. A statement to the effect that inspection criteria are provided to assure that maintenance performed will restore the items to an Acceptable Quality Level (AQL) shall be included. The types of inspection procedures shall, at a minimum, include a pre-maintenance inspection to be conducted during unpacking, in-process inspections, and final acceptance inspection. Regulations and technical publications relating to policy responsibility and procedures applicable to ammunition stockpile reliability, ammunition surveillance, radioactive materials procedures, and quality evaluation programs shall be referenced. When approved by the acquiring activity these procedures contained in other publications shall be included in the task.

b. Instructions shall be prepared for inspection methods or techniques used to detect defective components or end items being processed. Classification of Material Defects tables (**standard information**) **<defect.tab>** shall be prepared for ammunition components and packaging and packing material (refer to MIL-HDBK-1222 for example of material defect **standard information**). The tabulated data shall include the following entries.

   (1) A list of categories of defects **<defecttype>** (minor, major, critical) by the defects attributable to each component <**condition**>.

   (2) The corrective action to be taken **<actionreq>** or a reference**<xref>/<link>** to the corrective action.

   (3) The inspection methods **<insp-method>** used to determine if corrective action was accomplished.

   (4) The acceptable quality level **<acceptqual>** established for each defect.

c. Visual inspection criteria shall be prepared for the packing of the items in conformance with the inspection criteria noted in E.5.3.5.3.16.1a.

d. Detailed procedures and criteria shall be prepared for function testing. When test fixtures must be fabricated, diagrams and instructions for the fabrication shall be prepared. Where ammunition is required for function testing weapons, it shall be identified by Department of Defense Ammunition Code (DODAC), NSN, and nomenclature, to include dummy rounds.

e. Instructions shall be prepared to establish a uniform system of examination for deterioration or damage. Definitions shall be prepared to explain minor, major, and critical defects. Lower maintenance levels shall be included, when appropriate.

f. A classification of defects (i.e., minor, major, or critical) for both functioning and nonfunctioning categories shall be included. The criteria shall conform to the publications noted in E.5.3.5.3.16.1b above.

g. Instructions for disposition of lots shall be prepared and shall be as specified by the acquiring activity. The following statements shall be included in the TM verbatim:

Source: https://assist.dla.mil -- Downloaded: 2016-12-05T17:12Z
Check the source to verify that this is the current version before use.

(1) Each lot of material shall be inspected and screened 100 percent if one critical nonfunctioning defect is observed. If a critical functioning defect occurs, save remaining pieces and components: suspend the lot from local issue and use. Submit malfunction reports as prescribed in AR 75-1 (Malfunctions Involving Ammunition and Explosives). Disposition instructions will be furnished by the US Army Materiel Command.

(2) A lot of materiel is acceptable for issue if the acceptable criteria as indicated in (insert applicable table number) are met.

(3) Report all lots of materiel rejected under applicable serviceability table for disposition instructions to: Commander, US Army Armament, and Chemical Logistics Activity, ATTN: AMSMC-DSM, Rock Island, IL 61299-6000. Include a statement describing the capability and workload situation of your organization as to whether you are capable of reworking/demilitarizing the item.

E.5.3.5.3.16.2 Pre-embarkation inspection of material in units alerted for overseas movement **<test-inspect>**. Pre-embarkation inspection procedures shall be prepared, if applicable, and shall be as specified by the acquiring activity.

E.5.3.5.3.17 Installation **<install>**. Procedures shall be prepared for installation of the item. Illustrations shall be used to support and clarify the text.

a. Instructions shall be prepared for painting, refinishing, and marking the item prior to its installation in the next higher assembly of the equipment.

b. Inspection procedures shall be prepared for checking alignment and adjustment of the item during the installation sequence. These instructions shall include a statement that adjustment, servicing, testing, and/or an operational check is required.

c. Instructions such as “reverse the removal procedure,” shall not be used.

d. Peculiar instructions shall be prepared for lockwiring, installing cotter pins, use of sealing compounds, lubricants, or corrosion prevention compounds and similar operations with applicable references to the expendable and durable items list.

e. Information shall be prepared for shelf-life items, mandatory replacement parts, etc.

f. Instructions shall be prepared for pressurizing and charging with gas, including all safety requirements.

E.5.3.5.3.18 Adjustment **<adjust>**. Adjustment instructions shall be prepared that may be required before operating the part, system, or end item.

E.5.3.5.3.19 Calibration **<calibration>**. Equipment that requires calibration after assembly or installation shall be indicated, and reference shall be made to the publication containing the applicable calibration procedure.

E.5.3.5.3.20 Radio interference suppression **<ris>**.

a. Instructions shall be prepared for primary components in the suppression system and replacement of these primary components.

b. Secondary components shall be referenced to pertinent maintenance procedures containing removal and installation instructions.

c. Instructions shall be prepared for testing radio interference suppression components.

Source: https://assist.dla.mil -- Downloaded: 2016-12-05T17:12Z
Check the source to verify that this is the current version before use.

E.5.3.5.3.21 Placing in service **<pis>**. Instructions shall be prepared for actions not previously noted that may be required for an assembly, component, or end item. Instructions shall be prepared such as removal of an item from storage and preparation for installation on an end item. Final servicing checks, calibration, leak checks, charging, pressurizing, and operational checks shall be prepared.

E.5.3.5.3.22 Testing **<test-pass>**. Instructions shall be prepared, as applicable, to test the performance of components, assemblies, and subassemblies prior to installation in the end item. The following instructions are required for depot and aviation maintenance.

a. (**DMWR/NMWR and aviation only**) Instructions shall be prepared for recording the results of the testing. All testing procedures that have a major quality assurance effect shall be preceded by a statement such as "QA check" to identify them.

b. (**DMWR/NMWR only**) Information shall be prepared for final testing of the highest assembly or equipment/end item involved to assure that the parameters of reliability, availability, maintainability, and durability are met. The following procedures shall be prepared.

   (1) Inspection. Inspection procedures shall be prepared that are required prior to final testing to assure that the item is complete and ready for final testing. Instructions shall be prepared for any minor preparation tasks needed prior to final testing.

   (2) Lubrication. Any final lubrication procedures that need to be done prior to final testing shall be prepared.

   (3) Final test procedures. Test procedures, performance standards, and tolerances shall be prepared to establish that the equipment is adequately overhauled and ready for issue without qualifications. The procedures shall list all tools, TMDE, jigs, fixtures, and other support items required for the test in the initial setup information. Operating instructions shall be prepared for special test equipment where necessary. Procedures shall be prepared for minor adjustments that can be done without disassembling equipment. Complete procedures shall be prepared for burn-in or run-in tests.

   (4) Final painting, refinishing, and marking. Procedures shall be prepared for any final painting, refinishing, and marking that could not be done during the overhaul procedures. The materials and tools required to do the job shall be identified. Depot level maintenance shall include data plate replacement data. For data plates which require replacement, the type of material shall be indicated. Detailed preparation and attachment instructions shall be prepared. The instructions for stamping data plates shall include the initials of the facility performing the overhaul or modification, the contact number (if applicable), the date of overhaul or modification, the part number, and the total operating time since new (if applicable). The instructions shall specify the letter and figure sizes and indicate their placement (adjustment to manufacturer's data). The following statement shall be inserted.

"When sufficient space is not available on the existing data plate to add information, the plate shall be replaced and all pertinent data transferred to the new plate. Data shall not be stamped directly on any part, assembly, or item of equipment except when approved by the Government."

Source: https://assist.dla.mil -- Downloaded: 2016-12-05T17:12Z
Check the source to verify that this is the current version before use.

E.5.3.5.3.23 Preservation, packaging, and marking **(DMWR/NMWR only) <ppm>**. The following instructions shall be prepared.

a. The packaging requirements for all components and end items under maintenance shall be requested from the items' source of supply, packaging management activity during the document's initial development and any revisions. The following packaging information shall be included verbatim in the DMWR/NMWR:

"PACKAGING

Military preservation, Level A packing, and marking shall be accomplished in accordance with the specific packaging instructions contained in WP (*insert work package number*).

MARKING FOR SHIPMENT AND STORAGE

a. Storage: In addition to any special markings called out on the special packaging instruction (SPI) or in the packaging requirements code, all unit packages, intermediate packs, exterior shipping containers, and, as applicable, unitized loads shall be marked in accordance with MIL-STD-129 including bar coding. The repair facility is responsible for application of special markings as required by MIL-STD-129 regardless of whether specified in the contract/order or not. Special markings include, but are not limited to, Shelf-life markings, structural markings, and transportation special handling markings. The marking of pilferable and sensitive materiel will not identify the nature of the materiel.

b. Shipment: The repair facility shall apply identification and address markings with bar codes in accordance with MIl-STD-129. A Military Shipment Label (MSL) is required for all shipments except contractor to contractor. The MSL will include both linear and 2D bar codes per the standard. Military Shipping Label: Military Shipment Labels may be created using the Computer Automated Transportation Tool Military Shipment Label/Issue Receipt Release Document (CATT MSL/IRRD).

HEAT TREATMENT AND MARKING OF WOOD PACKAGING MATERIALS

Wood Packaging Materials (WPM) (i.e., boxes, crates, skids, pallets, and any wood used as inner packaging made of non-manufactured wood) shall be constructed of lumber that has been heat-treated in accordance with the requirements of International Standard for Phytosanitary Measures (ISPM) –15. The WPM manufacturer shall be affiliated with an inspection agency accredited by the board of review of the American Lumber Standard Committee. The WPM manufacturer shall ensure traceability to the original source of heat treatment. Each piece of WPM shall be marked to show the conformance to the International Plant Protection Convention Standard. Certification markings shall be indelible and permanent. They may be stamped, stenciled, or branded directly onto or into the WPM. Certification marks shall be applied in a visible location

Source: https://assist.dla.mil -- Downloaded: 2016-12-05T17:12Z
Check the source to verify that this is the current version before use.

on at least two opposite sides of the wood packaging product, but are not required on each individual component piece of a wood packaging product. On dunnage, the marking shall be applied every two feet to opposite surfaces of each piece. If possible, the mark shall be visible when the dunnage is placed in the load to enable inspectors to verify the WPM's compliance without unloading or unstuffing the container. Foreign manufacturers shall have the heat treatment of WPM verified in accordance with their National Plant Protection Organization's compliance program.

ALTERNATIVES

The packaging requirements have been validated and the method of preservation/packing has proven successful in meeting the needs of the military distribution system, including undefined storage and shipment throughout the world. Tailoring of the packaging instructions may only be authorized by the packaging requirements developer. If tailored, prototype package is required to validate the sizes and fit requirements. Minor dimensional and size changes are acceptable provided email notification is provided to the packaging requirements developer. Any design changes or changes in the method of preservation that provide a cost savings without degrading the method of preservation or packing or affecting the serviceability of the item will be considered and responded to within 10 days of submission. The equipment proponent reserves the right to require testing to validate alternate preservation methods, materials, alternates, blocking, bracing, cushioning, and packing.

REUSE OF PACKAGING MATERIALS

The cushioning material and the fiberboard boxes may be reused provided:

a. There is no visible damage to material.
b. The foam cushioning has not taken a permanent set.
c. The fiberboard has no punctures, delaminating, or crushed flutes.

The water vapor proof barrier bag be shall never be reused. Always use new barrier material, evacuate air from the barrier bag, and conduct a snap test after two hours on each bag to ensure seal is holding. All components of the wood box/crate must be present, properly secured in position, and not broken. Splits are acceptable provided the boards remain secured and not loose. When reapplying the lid, fasteners shall be placed 1/2 inch away from the previous fastener hole. Strapping shall be applied per MIL-HDBK-774.

Source: https://assist.dla.mil -- Downloaded: 2016-12-05T17:12Z
Check the source to verify that this is the current version before use.

CONTAINER REPAIR

Each long life metal reusable container will be inspected and reconditioned in accordance with TB 9-289, TB 55-8100-200-24, or SB 725-92-1 and the applicable container-drawing package. Container drawings are available upon request from the packaging requirements developer. This reconditioning effort includes mandatory replacement of breather valves, humidity indicators, data plates, sealing gaskets, and desiccant, plus all shear mounts with an age factor of five years or older. It also includes a leak test after reconditioning, inspection and replacement of unserviceable wood skids, and touch up or total stripping and refinishing of the container surfaces with CARC paint."

b. Special instructions. Instructions shall be prepared for any special or unique preservation, packaging, or marking instructions that apply to the equipment. These instructions shall include warnings, cautions, or references concerning electrostatic discharge (ESD), nuclear material, hazardous substances, special markings instructions or any other instructions that are required that are not covered in the standard packaging and preservation information.

E.5.3.5.3.24 Overhaul and retirement schedule **(aircraft only) <orsch>**. This maintenance task shall include the following statement and associated table (standard information) and may include an introduction.

"OVERHAUL AND RETIREMENT SCHEDULE

Units of operating equipment that are to be overhauled or retired at the period specified are listed here. Unless otherwise specified in TM 1-1500-328-23, Aeronautical Equipment Maintenance Management Policies and Procedures, removal of equipment for overhaul may be accomplished at the inspection nearest the time when overhaul is due."

The overhaul and retirement schedule (refer to MIL-HDBK-1222 for example of **standard information**) shall consist of the entries described below. The overhaul and retirement schedule may be prepared as a table.

a. Part name. The name of the part shall be listed. An asterisk (*) shall precede the part name if the part is an indentured subassembly.
b. Part number. The official part number of the part listed.
c. Overhaul interval hours. The maximum operating time allowed on the part before it is to be overhauled.
d. Overhaul interval notes. Any additional information required on the part's overhaul interval.
e. Retirement interval hours. Maximum operating time allowed on the part before it is removed and condemned.
f. Retirement interval notes. Any additional information required on the part's retirement interval.

Source: https://assist.dla.mil -- Downloaded: 2016-12-05T17:12Z
Check the source to verify that this is the current version before use.

E.5.3.5.3.25 Preparation for storage or shipment <**pss**>. As applicable, the following instructions shall be prepared.

a. Security procedures and special transportation requirements for sensitive items (security, terrorists, etc.).
b. Special preservation, packaging, packing, marking, ESD protective and control measures, and shipping instructions, including use of special design reusable containers.
c. Instructions on special use of corrosion-preventive compounds, moisture barriers, and desiccant materials.
d. Instructions for applying special identifying, shipping, and cautionary markings to shipping containers; including security classification, special temperature requirements, and shelf life.
e. Instructions will be provided by the proponent activity for placing equipment in, and for removing it from, administrative storage.
f. Procedures for proper handling, blocking, and bracing of basic load ammunition when being transported in trucks and other tactical vehicles.
g. **(Conventional and chemical ammunition only)** Basic load storage, quantity-distance class, storage compatibility groupings, storage temperatures, stacking limits, and other pertinent storage requirements.
h. For aviation ground support equipment, a reference to TM 1-1500-204-23 for general technical information for preparation for storage or shipment.

E.5.3.5.3.26 Classification of defects <**ammo.defect**>. Procedures shall be prepared for inspection of ammunition/containers (pallets, boxes, etc.) and shall include classification and disposition of defective ammunition/containers.

E.5.3.5.3.27 Handling ammunition <**ammo.handling**>. Procedures shall be prepared for handling ammunition.

a. Unpacking <**ammo.unpacking**>. As a minimum, the following information shall be prepared.
   (1) Any special sequence of action necessary to protect the ammunition.
   (2) If a special design reusable container is involved for either the end item or components which are authorized for replacement, instructions shall be prepared to report or reenter the empty container through supply channels.
   (3) Man-hour requirements and total man-hours required for unpacking the ammunition.
b. Packing <**ammo.packing**>. As a minimum, the following information shall be prepared.
   (1) Any special sequence of action necessary to protect the ammunition.
   (2) Instructions shall be prepared on how to package defective ammunition.
   (3) Man-hour requirements and total man-hours required for packing the ammunition.

E.5.3.5.3.28 Ammunition markings <**ammo.markings**>. Instructions shall be prepared for marking ammunition and ammunition containers.

E.5.3.5.3.29 Procedures needed to activate ammunition, mine, etc. <**arm**>. Procedures shall be prepared for activation of ammunition, mines, etc.

Source: https://assist.dla.mil -- Downloaded: 2016-12-05T17:12Z
Check the source to verify that this is the current version before use.

E.5.3.5.3.30 Additional maintenance task **<other.maintsk>**. Additional maintenance task may be developed when the specific type of maintenance tasks are not covered as described in E.5.3.5.3.2 through E.5.3.5.3.29. If additional maintenance tasks are used, proponent shall submit to LOGSA the requirements for this maintenance task type for possible incorporation within future revisions to this standard.

E.5.3.5.3.31 Follow-on maintenance task **<followon.maintsk>**. As applicable, instructions shall be prepared for follow-on maintenance and shall be the last task in the work package. Follow-on is a maintenance condition which must be accomplished sometime following the completion of a task to clean up or undo actions performed during the task. For example, in order to fix a component a task might require that an access panel be removed. The panel would then need to be replaced as a follow-on action. This task might be performed sometime after the repair task is completed, but not immediately after the repair task. Other maintenance tasks might be performed in the same area before the follow-on task is accomplished.

E.5.3.6 General maintenance work package **<gen.maintwp>**. This work package shall be prepared as directed by acquiring activity and contain common, general, or standard maintenance procedures (e.g., specific torque wrench usage, lockwire procedures, “O” ring seal installation, external power connections, etc.) applicable to other maintenance work packages contained within the TM that require the general maintenance procedures to complete the tasks. Maintenance tasks listed in E.5.3.5.3 may be included, as applicable. This WP may be referenced in other maintenance work packages.

E.5.3.6.1 Work package identification information **<wpidinfo>**. Work package identification information is required for this work package (refer to 4.8.6.1).

E.5.3.6.2 Initial setup information **<wpinfo>**. Initial setup information is required for this work package (refer to 4.8.6.1.1).

E.5.3.6.3 Maintenance tasks **<maintsk>**. Maintenance tasks requirements in E.5.3.5.3 shall be included.

E.5.3.7 Lubrication instructions work package **<lubewp>**. This work package shall be prepared as directed by acquiring activity and contain the requirements outlined in E.5.3.7.1 through E.5.3.7.4.

E.5.3.7.1 Work package identification information **<wpidinfo>**. Work package identification information is required for this work package (refer to 4.8.6.1).

E.5.3.7.2 Initial setup information **<wpinfo>**. Initial setup information is required for this work package (refer to 4.8.6.1.1).

E.5.3.7.3 Lubrication instructions. Lubrication schedules shall be prepared to present all applications and procedures, lubricants, and lubrication points to completely lubricate equipment.

Source: https://assist.dla.mil -- Downloaded: 2016-12-05T17:12Z
Check the source to verify that this is the current version before use.

E.5.3.7.4 Lubrication charts.

a. Lubrication charts shall consist of a main drawing prepared as a three-dimensional diagram, and such enlarged or detailed views as are considered necessary to identify items which otherwise would be obscured. They shall show all lubrication requirements for all parts of the equipment requiring periodic lubrication, other than those lubricated by the main engine oil system. The charts shall also indicate type of lubricant, method of application, and frequency (refer to FIGURE E-3).
b. Use of black silhouette figures representing a likeness of the tool used in the application (oil can, grease gun, brush, or hand) shall be the accepted means of presenting application methods on the lubrication chart.
c. Abbreviations, as specified in MIL-HDBK-275, shall be used to present lubricant types. In the event a lubricant does not have an abbreviation listed in MIL-HDBK-275, the abbreviation shall be provided by the procuring activity. Assigned application symbols, type abbreviations, and frequency shall be placed within the standard lubrication symbols.
d. Each application symbol and lubricant abbreviation used shall be defined. Notes may be used to specify requirements other than normal.

E.5.3.8 DMWR/NMWR specific maintenance work packages.

E.5.3.8.1 Facilities work package **(DMWR/NMWR only) <facilwp>**. This work package shall be prepared as directed by acquiring active. A description of all facilities, such as test stands, test tracks, clean rooms, shielded rooms, or other facilities that are required to do the maintenance work shall be included. Reference shall be provided for any specifications or standards that these facilities must meet. When approved by the acquiring activity, data from these standards may be included in the procedures.

a. Work package identification information **<wpidinfo>** is required for this work package (refer to 4.8.6.1).
b. Initial setup information **<wpinfo>** is required for this work package (refer to 4.8.6.1.1).

E.5.3.8.2 Overhaul inspection procedures **(OIP) work package (DMWRs/NMWRs only) <oipwp>**. Unless otherwise specified by the acquiring activity, OIPs shall be prepared for items that have parts with specific characteristics, wear limits, specified performance requirements, or fatigue characteristics or tolerances. A separate work package shall be provided for each item containing such parts. Within each work package, a separate OIP shall be provided for each part of the item that requires a critical inspection.

E.5.3.8.2.1 Work package identification information **<wpidinfo>**. Work package identification information is required for this work package (Refer to 4.8.6.1).

E.5.3.8.2.2 Initial setup information **<wpinfo>**. Initial setup information is required for this work package. (Refer to 4.8.6.1.1)

Source: https://assist.dla.mil -- Downloaded: 2016-12-05T17:12Z
Check the source to verify that this is the current version before use.

E.5.3.8.2.3 Overhaul Inspection Procedures (OIP). The OIP shall contain the characteristics being inspected for, inspection methods, and the acceptance/reject criteria that must be met. For characteristics having a major quality assurance effect, the acronym "QA" shall be placed immediately preceding the characteristic to which it applies. Unless otherwise specified by the acquiring activity, an illustration shall accompany the OIP. Illustrations for OIPs are strongly encouraged and shall only be omitted for very simple systems. A reference letter may be included in the OIP to locate the critical inspection characteristics of the parts on the illustrations. The OIPs may be contained in a table or a list. References to these OIP work packages shall be included within the applicable maintenance procedural step (i.e. disassembly, reassembly, testing, etc.) or preshop analysis procedural step where they apply. See MIL-HDBK-1222 for example of an OIP.

E.5.3.8.3 Depot mobilization requirements work package **(DMWR/NMWR only) <mobilwp>**. When specified and provided by the acquiring activity, the modifications, deletions, or additions to the preshop analysis or overhaul procedures required during mobilization shall be included in this WP. The data described in E.5.3.8.3.1 through E.5.3.8.3.4 shall be included (**standard information**).

E.5.3.8.3.1 Work package identification information **<wpidinfo>**. Work package identification information is required for this work package (Refer to 4.8.6.1).

E.5.3.8.3.2 Initial setup information **<wpinfo>**. Initial setup information is required for this work package. (Refer to 4.8.6.1.1)

E.5.3.8.3.3 Introduction for depot mobilization requirements work package **<intro>**. The following text shall be included verbatim.

> "**DEPOT MOBILIZATION REQUIREMENTS**
>
> **INTRODUCTION**
>
> **Scope**
>
> The purpose of this work package is to streamline and accelerate the overhaul process during the mobilization of the depot.
>
> **Explanation of Mobilization Requirements**
>
> The mobilization requirements include a list of instructions for modifying preshop analysis and/or overhaul procedures. The pertinent procedures to be modified are referred to by work package number, followed by the action to be taken."

E.5.3.8.3.4 Mobilization requirements **<mobilreq>**. Mobilization requirements consist of a list of actions that shall be in effect during depot mobilization. The work packages that are modified by these actions shall be noted. The mobilization action shall be listed and linked to the specific step in the applicable task. Alternatively, if the actions are already listed in another work package or packages, a statement shall be made that includes links to those actions. See MIL-HDBK-1222 for example of mobilization requirements.

E.5.3.8.4 QA requirements work package **(DMWR/NMWR only) <qawp>**. This work package shall be prepared and include the data described in E.5.3.8.4.1 through E.5.3.8.4.10.

Source: https://assist.dla.mil -- Downloaded: 2016-12-05T17:12Z
Check the source to verify that this is the current version before use.

E.5.3.8.4.1 Work package identification information **<wpidinfo>**. Work package identification information is required for this work package (refer to 4.8.6.1).

E.5.3.8.4.2 Initial setup information **<wpinfo>**. Initial setup information is required for this work package (refer to 4.8.6.1.1).

E.5.3.8.4.3 Statement of responsibility **<responsibility>**. The following information shall be included.

"**STATEMENT OF RESPONSIBILITY**

The depot/contractor is responsible for complying with the quality assurance requirements contained in this work package and in accordance with ISO 9000 Series standards or equivalent. The commodity manager reserves the right to perform inspections or make changes that ensure the depot work being done meets the quality standards of the DMWR and preserves the inherent reliability of the item."

E.5.3.8.4.4 Definitions **<definitions>**. Definitions shall be prepared for all QA terms extensively used in the Depot Maintenance Work Requirement (DMWR) and National Maintenance Work Requirement (NMWR). Alternatively, if the definitions are listed in another publication, that publication shall be referenced.

E.5.3.8.4.5 Special requirements for inspection tools and equipment **<specialreq>**. Any special requirements for the maintenance and calibration of tools and test equipment used for QA inspections shall be listed.

E.5.3.8.4.6 Certification requirements **<certreq>**. Any certification or licensing requirements for processes, procedures, materials, equipment, or personnel skills shall be listed. The list shall include appropriate standards, specifications, regulations, or laws that apply. The list shall reference the text in the DMWR/NMWR where there is a requirement for a soldering, welding, or magnetic particle inspection certification, radioactive substance, or test driver licenses.

E.5.3.8.4.7 Quality program **<quality-program>**. Any requirements for a quality program shall be listed.

E.5.3.8.4.8 In-process inspections **<inprocess>**. The following statement shall be included.

"**IN-PROCESS INSPECTIONS**

In-process quality assurance inspections are contained throughout the overhaul procedures of this DMWR. These inspections are immediately preceded by a statement such as "QA check" to identify them, and they are the minimum inspections required. Additional quality assurance inspections may be established by the depot or the commodity manager."

E.5.3.8.4.9 Acceptance inspections **<acceptance>**. The following statement shall be included.

"**ACCEPTANCE INSPECTIONS**

Items overhauled in accordance with this DMWR will be accepted based on the following criteria:

1. Conformance to quality of material requirements.

Source: https://assist.dla.mil -- Downloaded: 2016-12-05T17:12Z
Check the source to verify that this is the current version before use.

2. Conformance to all in-process quality assurance inspections.
3. Conformance to all final assembly testing requirements.
4. Conformance to the preservation, packaging, and marking requirements."

E.5.3.8.4.10 First article inspection **<first>**. When applicable, first article inspection/test shall be prepared for the DMWR/NMWR in accordance with ISO 9000 Series standards or equivalent.

E.5.3.9 Illustrated list of manufactured items **(Field level or above only) <manuwp>**. The illustrated list of manufactured items information shall be prepared as directed by acquiring activity and shall contain an introduction work package and a manufacturing procedures work package which identifies and includes technical information for each item authorized to be manufactured or fabricated by field or sustainment personnel (e.g., all "MO", "MF", "MH", and "MD" source coded items). When applicable, links may be made to fabrication instructions for tools and equipment.

E.5.3.9.1 Illustrated list of manufactured items introduction work package<**intro**>. The work package shall include the data described in E.5.3.9.1.1 through E.5.3.9.1.4.

E.5.3.9.1.1 Work package identification information **<wpidinfo>**. Work package identification information is required for this work package (refer to 4.8.6.1).

E.5.3.9.1.2 Initial setup information **<wpinfo>**. Initial setup information is not required for this work package.

E.5.3.9.1.3 Introduction for illustrated list of manufactured items work package **<intro>**. The following introduction (text below within the quotation marks) shall be prepared and included verbatim.

"**ILLUSTRATED LIST OF MANUFACTURED ITEMS**
INTRODUCTION

Scope

This work package includes complete instructions for making items authorized to be manufactured or fabricated at the (*enter applicable maintenance level*).

How to Use the Index of Manufactured Items

A part number index in alphanumeric order is provided for cross-referencing the part number of the item to be manufactured to the information which covers fabrication criteria.

Explanation of the Illustrations of Manufactured Items

All instructions needed by maintenance personnel to manufacture the item are included on the illustrations. (When applicable, a reference to the associated parts information TM or parts information work package shall be entered here.) All bulk materials needed for manufacture of an item are listed by part number or specification number in a tabular list on the illustration."

Source: https://assist.dla.mil -- Downloaded: 2016-12-05T17:12Z
Check the source to verify that this is the current version before use.

E.5.3.9.1.4 Index of manufactured items **<manuindx>**. A index of part numbers or drawing numbers shall be prepared which lists part numbers and/or drawing numbers, in alphanumeric order, along with the name of the part for all items illustrated in this work package. If applicable, the illustration figure number containing the manufacturing data shall be included.

E.5.3.9.2 Manufacturing procedures work package<**manfcprocwp**>. This work package shall contain the following information:

E.5.3.9.2.1 Work package identification information **<wpidinfo>**. Work package identification information is required for this work package (refer to 4.8.6.1).

E.5.3.9.2.2 Initial setup information **<wpinfo>**. Initial setup information is required for this work package (refer to 4.8.6.1.1).

E.5.3.9.2.3 Illustrations of manufactured items **<graphic>**. The following information shall be prepared:

a. As required Illustrations shall be prepared which contain sufficient views to portray all features of the item (refer to FIGURE E-4).

b. All instructions (explanatory text and list of bulk materials) needed by maintenance personnel to manufacture the item (refer to FIGURE E-4) shall supplement the illustrations and shall contain the following data.

(1) All dimensional, location, and processing instructions needed to manufacture the item shall be included (e.g., 30-in. long, top surface, primer coating).

(2) A description of the item to be manufactured, including the P/N and name.

(3) A list of bulk materials needed to manufacture the item shall be prepared. The list of bulk materials shall consist of the P/N, CAGE number and NSN, or specification number of the raw bulk material to be used in manufacture of the item and shall cite the technical characteristics (i.e., standards, specifications, conditions, dimensions, and any other pertinent data).

(4) When applicable, a link shall be made to the associated parts information (PI), parts information TM or Repair Parts List work package (for combined TMs).

E.5.3.10 Torque limits work package **(Field level or above only) <torquewp>**. This work package shall be prepared as directed by acquiring activity and information prepared to provide applicable torque values **<torque>** (expressed in lb-ft or lb-in. terms), data as to bolt grade markings and their proper identification, and specific torque sequencing requirements. Refer to FIGURE E-5 for an example of the type of information presented in a torque limits work package. The torque data described in E.5.3.10.1 through E.5.3.10.4 shall be included.

E.5.3.10.1 Work package identification information **<wpidinfo>**. Work package identification information is required for this work package (refer to 4.8.6.1).

E.5.3.10.2 Initial setup information **<wpinfo>**. Initial setup information is not required for this work package.

E.5.3.10.3 Introduction **<intro>**. Information shall be prepared to include the scope or how to use the work package.

E.5.3.10.4 Torque instructions **<torqueval>**. Specific instructions such as torque limits for dry and wet fasteners, fastener sizes and thread patterns, etc., shall be prepared.

Source: https://assist.dla.mil -- Downloaded: 2016-12-05T17:12Z
Check the source to verify that this is the current version before use.

E.5.3.11 Wiring diagrams work package **(Field level or above only) <wiringwp>**. This work package shall be prepared as directed by acquiring activity and include wiring and cable provisions contained in the equipment/end item, including all systems or equipment which can be installed or removed later (e.g., mission-related systems/equipment). Applicability of diagrams shall be explained in relation to equipment configuration. At a minimum, the wiring data described in E.5.3.11.1 through E.5.3.11.6 shall be included.

E.5.3.11.1 Work package identification information **<wpidinfo>**. Work package identification information is required for this work package (refer to 4.8.6.1).

E.5.3.11.2 Initial setup information **<wpinfo>**. Initial setup information is required for this work package (refer to 4.8.6.1.1).

E.5.3.11.3 Introduction **<intro>**. Information shall be prepared to include the scope of the work package. A statement shall be included explaining that wiring diagrams and essential wiring information are provided for all electrical and electronic systems and circuits.

E.5.3.11.4 Wire identification **<wireid>**. Identification of wires by number shall be explained. A list of circuit designators and a wire identification diagram shall be prepared.

E.5.3.11.5 Abbreviations **<abbrev>**. A statement shall be prepared that abbreviations are in accordance with ASME Y14.38, except when the abbreviation stands for a marking actually found in the equipment.

E.5.3.11.6 Wiring diagrams **<wiringdiag>**. Wiring diagrams shall be prepared for all electrical and electronic systems and circuits.

E.5.3.12 Aircraft specific maintenance work packages.

E.5.3.12.1 Preventive maintenance inspections work package **(aircraft only) <pmiwp>**. This work package shall be prepared as directed by acquiring activity and contain the requirements outlined in E.5.3.12.1.1 through E.5.3.12.1.5.

E.5.3.12.1.1 Work package identification information **<wpidinfo>**. Work package identification information is required for this work package (refer to 4.8.6.1).

E.5.3.12.1.2 Initial setup information **<wpinfo>**. Initial setup information is required for this work package (refer to 4.8.6.1.1).

E.5.3.12.1.3 General information and introduction **<geninfo>**. The following paragraph shall be inserted.

> "**GENERAL INFORMATION**
>
> This work package contains complete requirements for special inspections, overhaul and retirement schedule, and standards of serviceability applicable to the aircraft. The inspections prescribed in this work package shall be accomplished at specified periods by aviation maintenance companies, with the assistance of aviation support batallions when required. Complete Daily, Intermediate, Periodic, or Phased inspections are contained in the (*insert applicable aircraft inspection checklist TM*)."

Source: https://assist.dla.mil -- Downloaded: 2016-12-05T17:12Z
Check the source to verify that this is the current version before use.

E.5.3.12.1.4 Standards of serviceability. The following paragraph shall be inserted.

"Standards of serviceability to be utilized in the day-to-day inspection and maintenance of the aircraft can be found as fits, tolerances, wear limits, and specifications in the aircraft maintenance manuals. Standards of serviceability for transfer to aircraft are contained in TM 1-1500-328-23."

E.5.3.12.1.5 Special inspections.

a. Definition and general information. The following paragraph shall be inserted.

"This information supplements scheduled inspections as outlined in the applicable aircraft inspection checklists. Inspection of items which are required to be inspected at intervals not compatible with airframe operating time or airframe inspection intervals is also included. Refer to DA PAM 738-751 (Functional Users Manual for the Army Maintenance Management System-Aviation (TAMMS-A)) for applicable forms, records, and worksheets required for these inspection intervals. Typical examples of this type of inspection are as follows.

(1) Inspections which are solely contingent upon specific conditions or incidents that occur (e.g., hard landings, over speed, or sudden stoppage), wherein immediate inspection is required to ensure safe flight.

(2) Inspection of components or airframe on a calendar basis: e.g., first aid kits, weight and balance check, aircraft inventory."

b. Requirements. Components and other items which qualify under the criteria for special inspections, e.g., hard landings, sudden stoppage, over speed shall be included. These inspections shall be grouped under specific aircraft areas. A line drawing of the aircraft or accessory showing sequence for inspection by area shall be included. The area identified shall include all surfaces, materials, components, and equipment pertaining to that specific location. The following inspection data entries shall be included, as applicable. The information entries shall be as **standard information <pmi.pecul.tab>**.

(1) Aircraft serial or tail number **<serialno>**.

(2) Date of inspection **<date>**.

(3) Area number **<areano>**.

(4) Inspection number **<itemno>**.

(5) Inspection interval **<interval>**.

(6) Name of component being inspected **<compname>**.

(7) Inspection procedure **<proc>**.

E.5.3.12.2 Aircraft inventory master guide work package **(aircraft only) <inventorywp>**. This work package shall be prepared as directed by acquiring activity and information shall be prepared on standard inventory procedures to allow determination of inventoriable items of installed and loose equipment authorized and required by the specific aircraft in performance of its mission. The inventory data described in E.5.3.12.2.1 through E.5.3.12.2.6 shall be included.

E.5.3.12.2.1 Work package identification information **<wpidinfo>**. Work package identification information is required for this work package (refer to 4.8.6.1).

Source: https://assist.dla.mil -- Downloaded: 2016-12-05T17:12Z
Check the source to verify that this is the current version before use.

E.5.3.12.2.2 Initial setup information **<wpinfo>**. Initial setup information is required for this work package (refer to 4.8.6.1.1).

E.5.3.12.2.3 Introduction **<intro>**. A short explanation of the scope and purpose of the work package shall be prepared. Information pertaining to necessary steps to ensure the list is accurate, exact, and complete (e.g., research of authorized changes, Modification Work Orders (MWOs), additions/deletions for special mission requirements) shall be included. The introduction shall include a reference to DA PAM 738-751 for applicable forms and records.

E.5.3.12.2.4 Security **<security>**. It shall be stated here that aircraft inventory records should be unclassified but that any classification of the contents, if necessary, should be in accordance with the existing security regulations.

E.5.3.12.2.5 Inventoriable items **<inventoriable>**. The selection of inventoriable items to be listed is to be without regard to the agency (governmental or contractual) furnishing the items.

a. Items to be listed are as follows.
   (1) Items essential to the execution of the designated mission of the aircraft, such as electronic, photographic, armament, special mission instruments, and safety and comfort equipment.
   (2) Loose equipment delivered with the aircraft and items subject to pilferage or readily converted to personal use.
   (3) Modification kits which are reissued or distributed to using organizations for installation and which are not immediately placed in use. These shall be recorded on the affected aircraft's DA Form 2408-17, Aircraft Inventory Record, and identified as loose equipment until modification is completed.
   (4) Equipment required for operation in a specific environment.
b. Items to be excluded are as follows.
   (1) Nonaccountable items coded as expendable in the applicable stock lists.
   (2) Personal issue or items furnished on unit allowance or other authority.
   (3) Items or components considered as basic or integral parts of the airframe or basic aircraft, such as engines, propellers, wheels, and standard instruments.
   (4) Equipment publications, checklists, and aircraft forms.

E.5.3.12.2.6 Periods of inventory **<prdinv>**. The following text shall be included verbatim.

"**PERIODS OF INVENTORY**

Inventoriable items shall be checked against the Aircraft Inventory Record, DA Form 2408-17, at the following periods:

1. Upon receipt.

2. Prior to transfer of the aircraft to another organization.

3. Upon placing aircraft in storage and upon removal from storage. Aircraft need not be inventoried while in storage.

4. Twelve months after last inventory."

Source: https://assist.dla.mil -- Downloaded: 2016-12-05T17:12Z
Check the source to verify that this is the current version before use.

E.5.3.12.3 Storage of aircraft work package **(aircraft only) <storagewp>**. The stowage of aircraft work package(s) shall be prepared as directed by acquiring activity and information described in E.5.3.12.3.1 through E.5.3.12.3.4 shall be included.

E.5.3.12.3.1 Work package identification information **<wpidinfo>**. Work package identification information is required for this work package (refer to 4.8.6.1).

E.5.3.12.3.2 Initial setup information **<wpinfo>**. Initial setup information is required for this work package (refer to 4.8.6.1.1).

E.5.3.12.3.3 General information for storage of aircraft work package **<geninfo>**. The following text shall be included verbatim.

"**STORAGE OF AIRCRAFT**
GENERAL INFORMATION

Components Involved in an Accident

Any component removed for reason of accident shall not be preserved, but shall be shipped in the same condition it was in after the accident.

Categories of Storage

1. Flyable storage - no time limit.
2. Short term (administrative storage) - 1 to 45 days.
3. Intermediate storage - 46 to 180 days."

E.5.3.12.3.4 Flyable storage **<flyable>**, short term storage **<short>**, and intermediate storage **<intermediate>**.

a. A general discussion shall be prepared for each category of aircraft storage, to include considerations for selection of the appropriate category (e.g., ground operation, motoring of engines, and other required maintenance for which personnel and materials are needed) and steps to be taken for care of the aircraft during exceptionally wet weather.
b. All essential information for each category of aircraft storage shall be prepared to include all procedures for preparing the complete aircraft for storage and removal from storage, excluding any information on when or why the aircraft are stored. Each category of storage shall make reference to inspection documents and inspection procedures to be conducted before, during, and after storage.

E.5.3.12.4 Weighing and loading work package **(ASB only) <wtloadwp>**. The weighing and loading work package(s) shall be prepared and provide description, information, and procedures for aircraft weighing, balancing, and loading. The data described in E.5.3.12.4.1 through E.5.3.12.4.5 shall be included.

E.5.3.12.4.1 Work package identification information **<wpidinfo>**. Work package identification information is required for this work package (refer to 4.8.6.1).

E.5.3.12.4.2 Initial setup information **<wpinfo>**. Initial setup information is required for this work package (refer to 4.8.6.1.1).

Source: https://assist.dla.mil -- Downloaded: 2016-12-05T17:12Z
Check the source to verify that this is the current version before use.

E.5.3.12.4.3 General information **<geninfo>**. The following text shall be included verbatim.

"**WEIGHING AND LOADING ASB**

GENERAL INFORMATION

Scope

This work package contains description, information, and procedures for aircraft weighing and loading. This information replaces the Chart E (Loading Data and Special Weighing Instructions) placed in the individual aircraft weight and balance files by the aircraft manufacturer. Chart E in the aircraft file will no longer be required."

E.5.3.12.4.4 Weighing information **<formchart>**. Instructions for preparing the aircraft, weighing the aircraft in the basic weight condition, performing calculations, and using and recording data on DD Form 365-1 (Basic Weight Checklist) and DD Form 365-2 (Aircraft Weighing Record) shall be included. Instructions shall include setup requirements, procedures for positioning the aircraft in the weighing area, and assembly of the aircraft weighing equipment. Illustrations shall be prepared to support the text, including a two view chart diagram (refer to FIGURE E-7). A reference may be made to TM 55-1500-342-23 for additional information governing weight and balance of aircraft, forms, and records.

E.5.3.12.4.5 Loading information **<weightinst>**. Descriptions and instructions shall be prepared for aircraft loading, and computing weight and balance information. Sufficient information and data shall be provided so that an aviator, knowing the basic weight and moment of the aircraft, can compute any combination of weight and balance using the prescribed charts and forms. Reference shall be made to AR-95-1 (Aviation: General Provisions, Training, Standardization, and Resource Management), DA PAM 738-751 and TM 55-1500-342-23 for additional information governing weight and balance of aircraft, forms, and records. Data shall include fundamental principles of loading. An illustration of aircraft compartments and stations shall be included. Reference shall be made to DD Form 365-1 for a more complete listing of compartments and equipment that comprise the basic weight of the aircraft. Loading information shall include weight and balance characteristics, center of gravity limits, weight / balance and loading, and weight and moment tables for load items such as crew, fuel, cargo, and armament.

E.5.3.13 Auxiliary equipment maintenance work package **<auxeqpwp>**. When auxiliary equipment (e.g., Modified Tables of Organization and Equipment (MTOE) items, etc.) maintenance TMs or maintenance requirements cards are not procured for peculiar equipment furnished by the contractor, maintenance instructions shall be prepared.

E.5.3.13.1 Work package identification information **<wpidinfo>**. Work package identification information is required for this work package (refer to 4.8.6.1).

E.5.3.13.2 Initial setup information **<wpinfo>**. Initial setup information is required for this work package (refer to 4.8.6.1.1).

E.5.3.13.3 Auxiliary equipment procedures **<maintsk>**/**<proc>**. Concise step-by-step procedures shall be prepared for proper care of auxiliary equipment while in and out of service. These procedures shall include instructions for storage, preventive maintenance, lubrication, operating checks, and adjustments, as applicable. Maintenance instructions **<maintsk>** (refer to E.5.3.5.3) shall also be included, as applicable, for special tools that have been fabricated (refer to E.5.3.8.4.10).

Source: https://assist.dla.mil -- Downloaded: 2016-12-05T17:12Z
Check the source to verify that this is the current version before use.

E.5.3.14 Ammunition specific work package.

E.5.3.14.1 Ammunition maintenance work package <**ammowp**>. This work package shall be prepared as directed by acquiring activity and reference or contain the following:

E.5.3.14.1.1 Work package identification information <**wpidinfo**>. Work package identification information is required for this work package (refer to 4.8.6.1).

E.5.3.14.1.2 Initial setup information <**wpinfo**>. Initial setup information is required for this work package (refer to 4.8.6.1.1).

E.5.3.14.1.3 Care and handling <**ammo.handling**>. All procedures required for care and handling of ammunition, including hazard distances, storage, special requirements, prevention of deterioration due to rough handling, exposure to adverse weather conditions or other hazards. Visual inspection criteria shall be prepared to determine item serviceability.

E.5.3.14.1.4 Defective <**ammo.defect**>. Procedures shall be prepared for disposition of defective ammunition.

E.5.3.14.1.5 Cleaning and painting <**service**>. Use of cleaning materials and paint authorized for use in the specified maintenance operations.

E.5.3.14.2 Ammunition marking information work package <**ammo.markingwp**>. This work package shall be prepared as directed by acquiring activity and shall provide applicable information on ammunition marking <**ammo.markings**>, classification, identification <**ammotype**>, care and handling <**ammo.handling**>, preservation, transportation, authorized rounds, preparation for firing, fuzes, and packing <**ammo.packing**>. Reusable original packaging and containers shall be identified for return or temporary storage of ammunition in its original configuration. Information on classifying, identifying, caring for, handling, etc., non-ammunition Class V items shall be prepared, when applicable. Individual paragraphs shall be prepared for each ammunition type/classification.

a. Work package identification information <**wpidinfo**> is required for this work package (refer to 4.8.6.1).
b. Initial setup information <**wpinfo**> is required for this work package (refer to 4.8.6.1.1).

E.5.3.14.3 Foreign ammunition **(NATO) work package** <**natowp**>. A work package to describe foreign ammunition shall be prepared when applicable. The requirements of E.5.3.14.2 shall apply.

a. Work package identification information <**wpidinfo**> is required for this work package (refer to 4.8.6.1).
b. Initial setup information <**wpinfo**> is required for this work package (refer to 4.8.6.1.1).

Source: https://assist.dla.mil -- Downloaded: 2016-12-05T17:12Z
Check the source to verify that this is the current version before use.

E.5.3.15 Preventive maintenance services/Preventive maintenance daily inspection work packages **(aircraft preventive maintenance services/preventive maintenance daily only)** <**pmd-inspecwp**> or **<pms-inspecwp>**. A work package shall be developed for each specific inspection interval (i.e., daily, intermediate, periodic, 10 hour/14 day, 30 hr/42day, etc.), as applicable to the aircraft. Inspection checklists shall be divided by areas of the aircraft (i.e., nose, fuselage, tail, etc.). All items requiring inspection shall be listed in the logical sequence of inspection that would require a minimum of time and motion on the part of the individual performing the inspection. The checklist data shall be formatted and delivered to support the inspection requirements in DA PAM 738-751 as prescribed by the acquiring activity.

E.5.3.15.1 Work package identification information **<wpidinfo>**. Work package identification information is required for this work package (refer to 4.8.6.1).

E.5.3.15.2 Initial setup information **<wpinfo>**. Initial setup information is required for this work package (refer to 4.8.6.1.1.2).

E.5.3.15.3 Actuation warning. The following warning shall appear prior to first step of procedure:

WARNING

Accidental actuation of aircraft power plant or hydraulic system, or (*insert aircraft specific equipment as applicable, i.e., firing of armament, jettison ballistics*) may cause severe injury or death, Before starting inspection, aircraft safety check must be performed, if applicable IAW (*insert specific technical manual here) (if applicable the following statement may be inserted here "and all armament must be safetied, deactivated, and cleared (insert technical manuals here)"*).

E.5.3.15.4 Mandatory safety-of-flight inspection items. Mandatory safety-of-flight inspection items shall be highlighted. Mandatory safety of flight inspection items shall have WARNING on the WARNING SUMMARY page at the front of the manual. The WARNING shall be verbatim as follows:

"**FSCAP WARNING**

Certain inspections are mandatory Safety of Flight requirements, and the inspection intervals cannot be exceeded. In the event these insepctions cannot be accomplished at the specified interval, the aircraft condition status symbol will be immediatly changed to a red X."

E.5.3.15.5 Area diagram. Area diagram of the aircraft, showing sequences for inspection by area shall be included. The area identified shall include all surfaces, material, components and equipment pertaining to that specific location (refer to FIGURE E-8 (PMD) and FIGURE E-8A (PMS)).

E.5.3.15.6 Standard checklists. If applicable, the standard inspection checklist shall be further divided into Power Off checks and Power On checks.

a. The following statement shall be the first item for each aircraft and shall read: “Inspect aircraft forms and records for recorded discrepancies (DA PAM 738-751, Functional Users Manual for the Army Maintenance Management System Aviation (TAMMS-A)).”

Source: https://assist.dla.mil -- Downloaded: 2016-12-05T17:12Z
Check the source to verify that this is the current version before use.

b. The work packages shall be divided into the proper sequence of steps as outlined in the area diagrams. For PMD manuals, there shall be one work package for each inspection area.

c. The following statement will be the final procedure of the checklist: "Inspect for foreign object damage and ensure all access panels or doors opened or removed for this inspection are closed or reinstalled."

E.5.3.16 Phased maintenance inspection work package **(aircraft phased maintenance checklist only) <pmi-cklistwp>**. Phased maintenance inspection data shall be prepared and include the information described in E.5.3.16.1 through E.5.3.16.4.

E.5.3.16.1 Work package identification information **<wpidinfo>**. Work package identification information is required for this work package (refer to 4.8.6.1).

E.5.3.16.2 Initial setup information **<wpinfo>**. Initial setup information is required for this work package (refer to 4.8.6.1.12).

E.5.3.16.3 Inspection area diagrams **<figure>**. Diagrams locating the inspection areas and the access doors and panels which require removal at various phased maintenance inspections of the aircraft shall be included (refer to FIGURE E- and FIGURE E-).

E.5.3.16.4 Phased maintenance checklist. The phased maintenance inspection checklist data shall be formatted and presented to support the inspection requirements in DA PAM 738-751 as prescribed by the acquiring activity. The work package shall begin with the following note:

"**NOTE**

Prior to start of the Phased Maintenance Inspection, it is recommended that a pre-inspection maintenance test flight (MTF) be conducted. Accomplishment of the MTF shall be determined by the unit maintenance officer. The pre-inspection MTF should be conducted by a maintenance test pilot following a review of the aircraft forms and records and a briefing from the crew of the aircraft. The MTF is recommended to assess the aircraft performance and identify deficiencies that should be corrected while the aircraft is undergoing phased maintenance inspections."

E.5.3.16.5 DELETED.

E.5.3.16.6 DELETED.

E.5.3.16.7 DELETED.

E.6 **NOTES.**

The notes in section 6 apply to this appendix.

Source: https://assist.dla.mil -- Downloaded: 2016-12-05T17:12Z
Check the source to verify that this is the current version before use.

PREVENTIVE MAINTENANCE CHECKS AND SERVICES

Table 2. PMCS Mandatory Replacement Parts List (AO/A1)

ITEM NO.	PART NUMBER	NSN	NOMENCLATURE	QTY
		SEMI-ANNUAL (1500 MILE)		
1	D5-19-2353 (42765)	4240-01-026-3112	PRECLEANER AND PART (A1 ONLY)	01
2	MS24665-285 (42765)	5315-01-061-2060	PIN, COTTER	01
3	MS35333-42 (42765)	5310-00-595-7237	WASHER, LOCK	03
4	MS35338-43 (42765)	5310-00-045-3296	WASHER, LOCK	01
5	MS35338-44 (42765)	5310-00-582-5965	WASHER, LOCK	16
6	MS35338-46 (42765)	5310-00-004-5033	WASHER, LOCK	09
7	MS51922-1 (42765)	5310-00-088-1251	NUT, SELF-LOCKING	04
8	MS51922-17 (42765)	5310-00-087-4652	NUT, SELF LOCKING	17

FIGURE E-1. Example of a PMCS mandatory replacement parts list.

Source: https://assist.dla.mil -- Downloaded: 2016-12-05T17:12Z
Check the source to verify that this is the current version before use.

EXAMPLE OF TABULAR RAM DATA

Table 2. Requirements for XXX System

System	MTBF	MTR	A_0
Track	500 mi	30 min	0.89
Engine	70 hr	43 min	0.92
Hull	1,000 mi	80 min	0.86
Radio	400 hr	10 min	0.95
Night Sight	145 hr	10 min	0.88
Gun Tube	10,000 rds	45 min	0.95

Table 3. Maintenance Ratio for XXX System 0.35

Field	Below Depot	Depot
0.05	0.08	0.07

EXAMPLE OF NARRATIVE RAM DATA

Requirements for XXX System

Maintainability

When maintenance procedures shown in the technical manuals are f ollowed, the mature maintainability data are as follows:

1. Mean Operator Preventive Maintenance Time shall not exceed 0.25 man- hours per mission. This time shall not be included in field preventive maintenance time.
2. Maximum operator Corrective Maintenance Time shall not exceed 1. 00 man- hours per mission without being classified as a mission failure.
3. The ratio of total corrective and field preventive main tenance man- hours to operating hours shall not exceed 0.10.
4. The ratio of total field preventive maintenance man- hours to total operating hours shall not exceed 0.04.
5. The ratio of total corrective maintenance man -hours to operating hours shall not exceed 0.06.
6. Mean man-hours to perform a corrective maintenance action shall not excee d 2.5.
7. The Mean Time Between Corrective Maintenance Actions shall not be less than 150 operating hours.
8. The engine shall have an 80 percent probability of not requiring replacement in 20,000 miles of operation.
9. The gun tube shall have an 80 percent probability of not requiri ng replacement in 50,000 rounds of operation.
10. The truck shall have a 92 percent probability of not requiring r eplacement in 5,450 miles of operation.

EXAMPLE OF NARRATIVE RAM DATA

FIGURE E-2. Example of tabular and narrative reliability, availability, and maintainability data

Source: https://assist.dla.mil -- Downloaded: 2016-12-05T17:12Z
Check the source to verify that this is the current version before use.

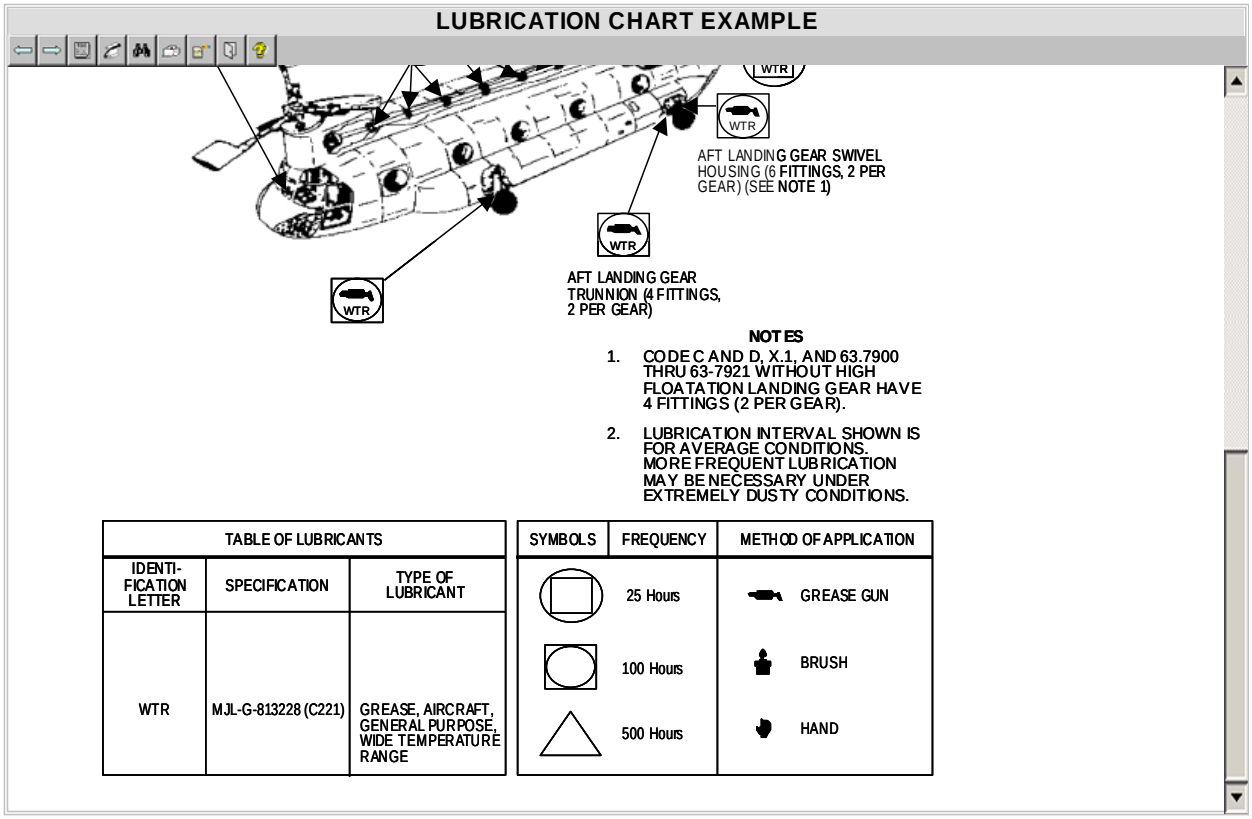

FIGURE E-3. <u>Example of a lubrication chart.</u>

Source: https://assist.dla.mil -- Downloaded: 2016-12-05T17:12Z
Check the source to verify that this is the current version before use.

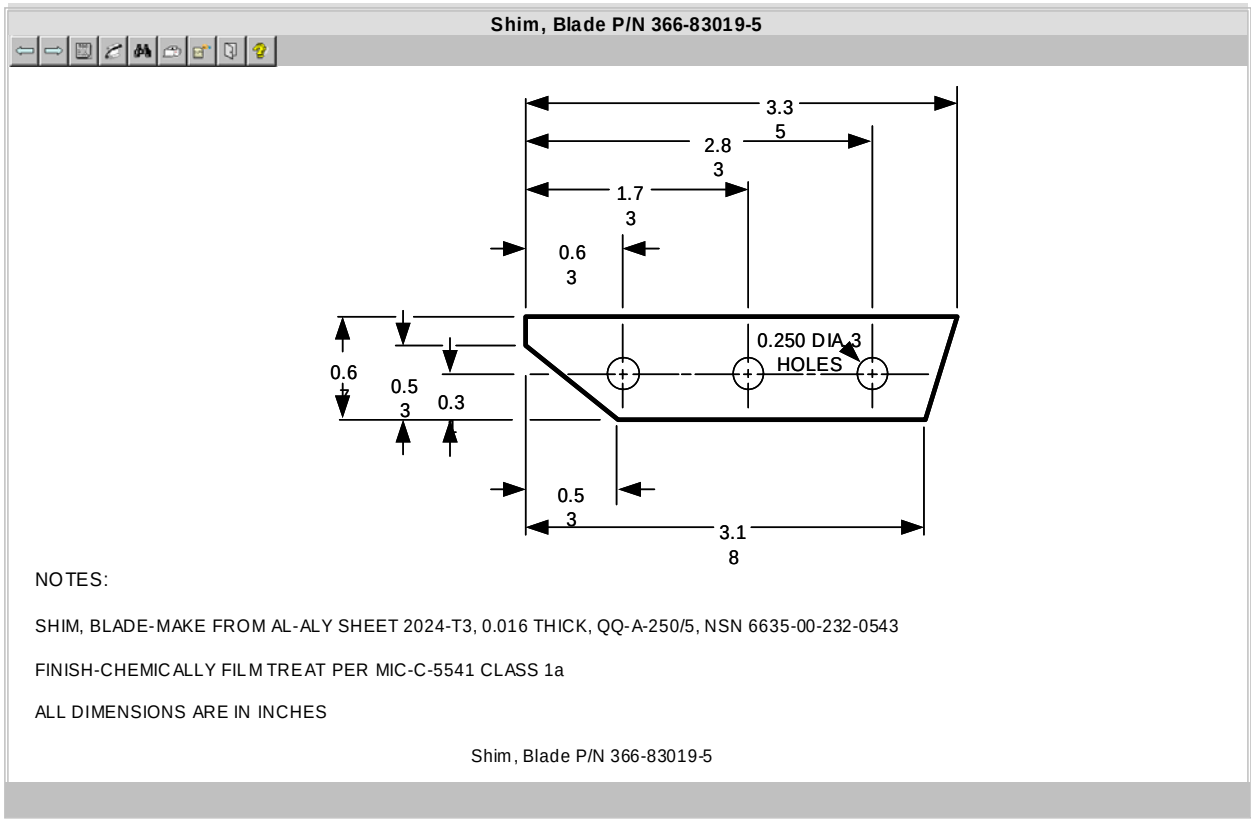

FIGURE E-4. <u>Example of an illustrated list of manufactured items</u>

Source: https://assist.dla.mil -- Downloaded: 2016-12-05T17:12Z
Check the source to verify that this is the current version before use.

SUSTAINMENT MAINTENANCE

TORQUE LIMITS

TORQUE TABLES

How To Use Torque Tables

1. Measure the diameter of the screw you are installing.

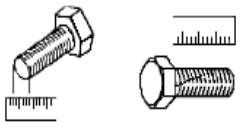

Figure 1. Measuring Screw.

2. Count the number of threads per inch or use a pitch grade.
3. Under the heading SIZE, look down the left-hand column until you find the diameter of the screw you are installing. (There will usually be two lines beginning with the same size).
4. In the second column under SIZE, find the numbers of threads per inch that matches the number of threads you counted in Step 2. (Not required for metric screws.)

Figure 2. Capscrew Head Markings.

NOTE

Manufacture's mark may vary. Standard are all SAE Grade 5 (3-Line). Metric screws are of three grades: 8.8, 10.9, and 12.9 Grades and manufacturer's marks appear on the screw head.

FIGURE E-5. Example of torque limits data.

Source: https://assist.dla.mil -- Downloaded: 2016-12-05T17:12Z
Check the source to verify that this is the current version before use.

FIGURE E-6. DELETED

Source: https://assist.dla.mil -- Downloaded: 2016-12-05T17:12Z
Check the source to verify that this is the current version before use.

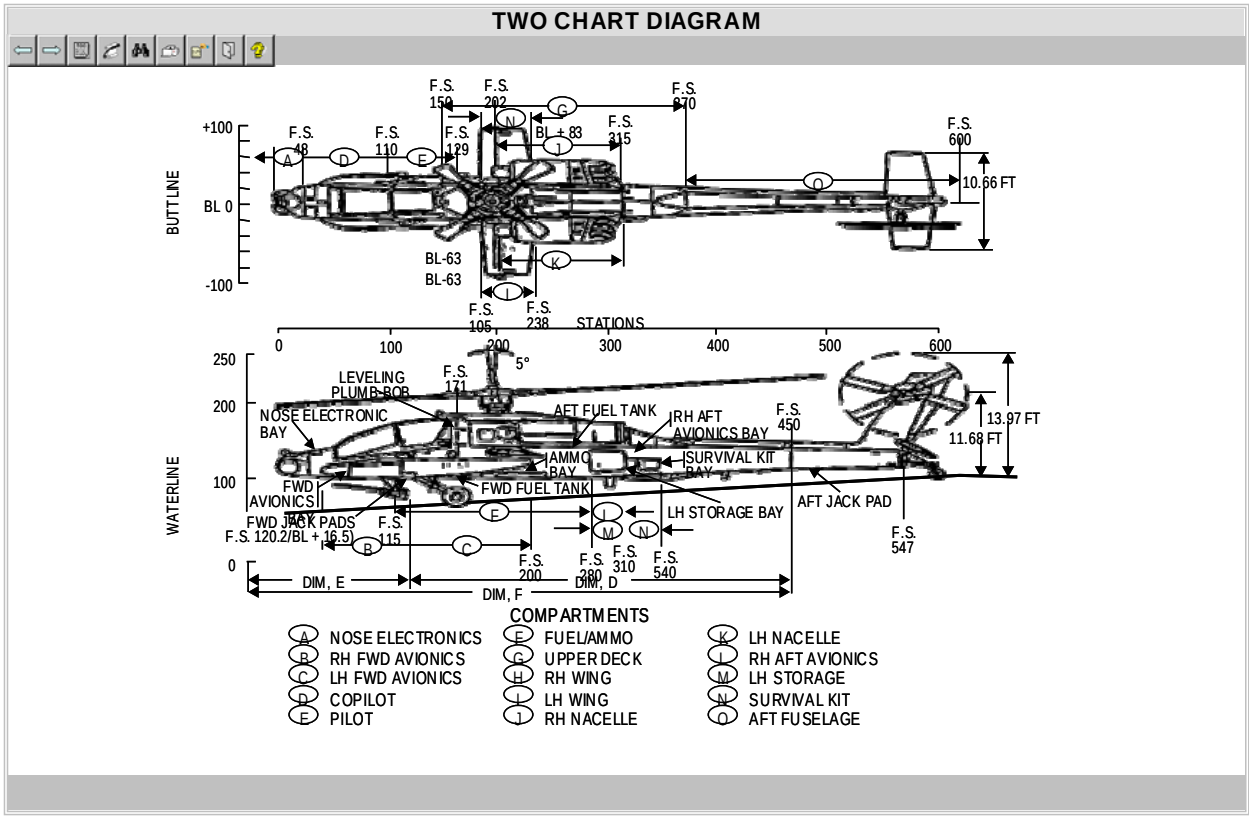

FIGURE E-7. <u>Example of two chart diagram.</u>

Source: https://assist.dla.mil -- Downloaded: 2016-12-05T17:12Z
Check the source to verify that this is the current version before use.

AREA DIAGRAM

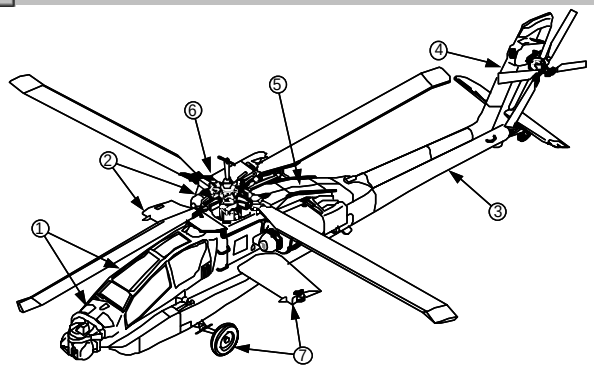

AREA NO. 1	CANOPY, CREW STATION, AVIONICS COMPARTMENTS, FORWARD FUSELAGE
AREA NO. 2	RIGHT FUSELAGE, WING, PYLONS, RIGHT MAIN LANDING GEAR, NO.2 ENGINE AND NACELLE, BATTERY COMPARTMENT
AREA NO. 3	AFT FUSELAGE, TAIL ROTOR DRIVE AND CONTROLS
AREA NO. 4	STABILIZER, STABILATOR, TAIL WHEEL, TAIL ROTOR DRIVES AND CONTROLS
AREA NO. 5	AFT EQUIPMENT BAY (ALL EQUIPMENT)

FIGURE E-8. Example of area diagram for PMD.

Source: https://assist.dla.mil -- Downloaded: 2016-12-05T17:12Z
Check the source to verify that this is the current version before use.

AREA DIAGRAM

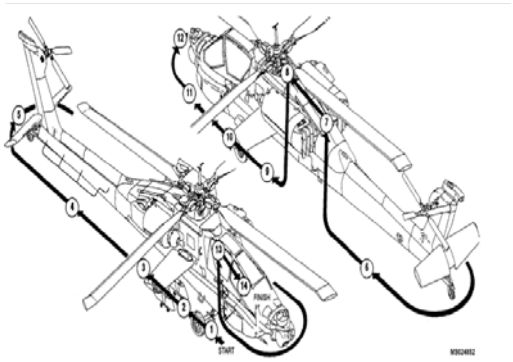

TM 1-1520-238-PMS

AREA NO. 1	WP 0002 00	Fuselage - Right Side Forward	All surfaces, components, and equipment in forward avionics bay. Includes landing gear and search light.
AREA NO. 2	WP 0003 00	Fuselage - Right Side Center	All surfaces, components, and equipment aft of crew station to engine nacelle. Includes transmission deck, right nose gearbox, engine installation components, wing and stores.
AREA NO. 3	WP 0004 00	Engine Nacelle - Right	All surfaces, components, and equipment aft of APU exhaust duct. Includes lower nacelle, aft electronics compartment, and IR suppressor.
AREA NO. 4	WP 0005 00	Fuselage - Right Side Aft	All surfaces, components, and equipment aft of APU exhaust duct and forward of intermediate gearbox. Includes hydraulic ground service panel and aft horizontal tail rotor drive shaft.
AREA NO. 5	WP 0006 00	Tail Section	All surfaces, components, and equipment aft of tailboom area. Includes horizontal stabilator, tail landing gear, intermediate and tail rotor gearboxes, aft vertical tail rotor drive shaft, and tail rotor.
AREA NO. 6	WP 0007 00	Fuselage - Left Side Aft	All surfaces, components, and equipment forward of intermediate gearbox and aft of ENCU exhaust duct.
AREA NO. 7	WP 0008 00	Catwalk	All surfaces, components, and equipment in catwalk area. Includes shaft-driven compressor, forward tail rotor drive shaft, fire extinguisher containers, environmental control unit (ENCU), and APU.

FIGURE E-8A. Example of area diagram for PMS.

Source: https://assist.dla.mil -- Downloaded: 2016-12-05T17:12Z
Check the source to verify that this is the current version before use.

INSPECTION AREA DIAGRAM

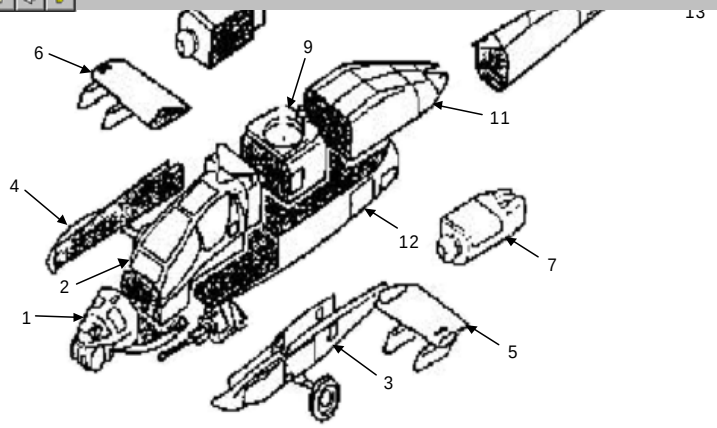

AREA NO.	AREA TITLE
1	FORWARD FUSELAGE
2	CREW STATIONS
3	LEFT FORWARD AVIONICS BAY AND MAIN LANDING GEAR
4	RIGHT FORWARD AVIONICA BAY AND MAIN LANDING GEAR
5	LEFT WING AND PYLONS
6	RIGHT WING AND PYLONS
7	LEFT ENGINE AND NOSE GEARBOX
8	RIGHT ENGINE AND NOSE GEARBOX
9	MAIN TRANSMISSION
10	MAIN ROTOR
11	AFT EQUIPMENT BAY

FIGURE E-9. Example of an inspection area diagram.

Source: https://assist.dla.mil -- Downloaded: 2016-12-05T17:12Z
Check the source to verify that this is the current version before use.

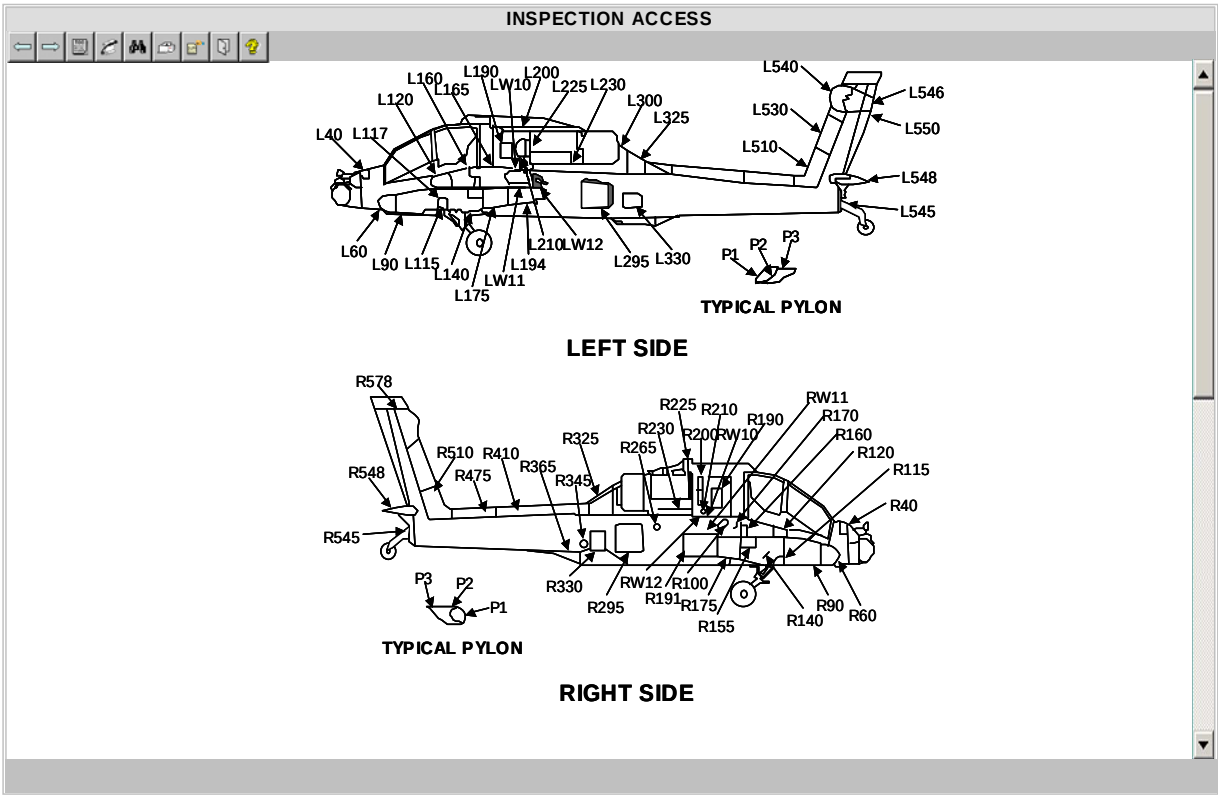

FIGURE E-10. <u>Example of inspection access provisions.</u>

Source: https://assist.dla.mil -- Downloaded: 2016-12-05T17:12Z
Check the source to verify that this is the current version before use.

This page intentionally left blank.

Source: https://assist.dla.mil -- Downloaded: 2016-12-05T17:12Z
Check the source to verify that this is the current version before use.

APPENDIX F

PARTS INFORMATION (PI)

F.1 **SCOPE.**

F.1.1 Scope. This appendix establishes the technical content requirements for the preparation of parts information (PI) for major weapon systems, and their related systems, subsystems, equipment, weapons replacement assemblies (WRAs), and shop replacement assemblies (SRAs). This Appendix is a mandatory part of this standard. The information contained herein is intended for compliance. The requirements are applicable for all maintenance levels through overhaul (depot) including Depot Maintenance Work Requirements (DMWRs) and National Maintenance Work Requirements (NMWRs).

F.2 **APPLICABLE DOCUMENTS.**

The applicable documents in section 2 apply to this appendix.

F.3 **DEFINITIONS.**

The definitions in section 3 apply to this appendix.

F.4 **GENERAL REQUIREMENTS.**

F.4.1 General. The parts information provides authorized spares and repair parts; special tools; special Test, Measurement, and Diagnostic Equipment (TMDE); and other special support equipment required for performance of all levels of maintenance of the weapon system/equipment, subsystems, assemblies, and components. It authorizes the requisitioning, issue and disposition of spares, repair parts and special tools in accordance with the Source, Maintenance and Recoverability (SMR) codes. All levels of maintenance, including depot, shall be included in the parts information.

F.4.2 Preparation of digital data for electronic delivery. Technical manual data prepared and delivered digitally in accordance with this standard shall be Extensible Markup Language (XML) tagged using the Document Type Definition (DTD) for PI and the XML Stylesheet Language (XSL), or style sheets in accordance with MIL-STD-2361. Refer to 4.6 for information on obtaining or accessing the DTD. XML tags used in the DTD are noted throughout the text of this standard in bracketed, bold characters (i.e., **<plwp>**) as a convenience for the TM author and to ensure that the tags are used correctly when developing a document instance.

F.4.3 Use of the DTD/XSLs. The DTD referenced in this standard interpret the technical content and structure for the functional requirements contained in this appendix and are mandatory for use. Development of IETMs is accomplished through the use of this standard, the DTD, and the guidance contained in MIL-HDBK-1222. The guidance contained in MIL-HDBK-1222 applies unless they conflict with the requirements in this appendix. A style sheet is used to interpret the style and format for screen display. For additional information on DTD and specific XSLs or style sheets, refer to MIL-STD-2361.

F.4.4 Content structure and format. The examples provided herein are an accurate representation of the content structure and format requirements contained in this appendix and shall be followed to permit the effective use of the DTD for PI.

Source: https://assist.dla.mil -- Downloaded: 2016-12-05T17:12Z
Check the source to verify that this is the current version before use.

F.4.5 Style and format. This standard provides style and format requirements for the technical content requirements described in this appendix. These requirements are considered mandatory and are intended for compliance.

F.4.6 IETM functionality. The specific level of functionality and user interaction to be provided in the IETMs shall be in accordance with the functionality matrix contained in Appendix A.

F.4.7 Work package development. Technical manual data developed in accordance with this standard shall be divided into individual, stand alone units of information called work packages. A work package shall consist of descriptive, operational, maintenance, troubleshooting, support, or parts information for the weapon system or equipment.

F.4.8 Selective application and tailoring. This standard contains some requirements that may not be applicable to the preparation of all technical manuals. Selective application and tailoring of requirements contained in this appendix are the responsibility of the acquiring activity and shall be accomplished using Appendix A, IETM Functionality And Data Display Requirements And Content Selection Matrixes. The applicability of some requirements is also designated by one of the following statements: unless specified otherwise by the acquiring activity; as/when specified by the acquiring activity; or when specified by the acquiring activity.

F.5 **DETAILED REQUIREMENTS.**

F.5.1 General. The requirements provided in this appendix provide the technical content requirements for the preparation of PI.

F.5.2 Parts information development.

F.5.3 Preparation of PI. PI requirements include introductory information, listings of all authorized spare and repair parts, special tools, special test, measurement, and diagnostic equipment (TMDE), and other support equipment required for performance of maintenance, and illustrations to identify and locate the spare and repair parts. PIs shall be prepared for weapon systems, major components and applicable support and interface equipment. This information shall be contained in one of the following:

a. PI work packages included in a maintenance TM,
b. PI work packages included in a Depot Maintenance Work Requirement (DMWR), or
c. PI work packages included in a National Maintenance Work Requirement (NMWR).

F.5.3.1 Parts information **<pim>**. Unless otherwise specified, the PIM shall contain the work packages listed below in the order specified.

a. A single introduction work package **<introwp>** (see F.5.3.3)**.**
b. One or more repair parts list work packages **<plwp>** (see 0)**.**
c. When there is a special tools work package and the special tools have repair parts, a special tools repair parts work package **<stl_partswp>** (seeF.5.3.6.1) shall be prepared.
d. When kit parts are listed as described under option 2 (see F.5.3.5.3.2.5.b), a kit parts list work package **<kitswp>** shall be prepared (see F.5.3.6.3.1).
e. When bulk items are listed in the parts list, a bulk items work package **<bulkitemswp>** shall be prepared (see F.5.3.8).
f. When special tools are listed, one or more special tools list work package **<stlwp>** (see F.5.3.6).

Source: https://assist.dla.mil -- Downloaded: 2016-12-05T17:12Z
Check the source to verify that this is the current version before use.

g. When specified by the acquiring activity a National Stock Number (NSN) index work package **<nsnindxwp>** (see F.5.3.10.1) shall be prepared. When the National Stock Number index work package is specified, the Part number index work package shall be prepared.

h. When specified by the acquiring activity a Part number index work package **<pnindxwp>** (see F.5.3.10.1) shall be prepared. When the Part number index work package is specified, National Stock Number index work package shall be prepared.

i. When specified by the acquiring activity a Reference designator index work package **(Optional) <refdesindxwp>** (see F.5.3.10.2.1) shall be prepared.

F.5.3.2 PI work packages included in a DMWR/NMWR. If an item of equipment is programmed for depot overhaul and no repair parts (including modules, printed circuits, and components) are authorized for replacement at a level below depot maintenance, authorized repair parts data shall appear in the applicable DMWR/NMWR. Introduction, repair parts list, kit parts, bulk items, special tools list, and cross reference indexes work packages as described in F.5.3.3 through F.5.3.9.3.5 shall be included as specified herein.

F.5.3.2.1 Depot repair parts. Unless otherwise specified by the acquiring activity, depot level repair parts shall be included in the single PI (see F.4.1). When the acquiring activity specifies a depot (DMWR/NMWR) level IETM only depot level parts shall appear in the depot RPSTL. Figure(s) in the lower maintenance level PI that contain both depot coded and non depot coded parts shall identify all parts. The appropriate SMR code shall identify the repair level. If the PI includes depot repair parts, the statement "Including Depot Maintenance Repair Parts" shall be added to the title of the TM.

F.5.3.3 Repair parts list, special tools, and kits work package layout. Refer to MIL-HDBK-1222 for possible layout scenarios.

F.5.3.4 Introduction work package **<introwp> (Ground Systems)**. The introduction work package shall be prepared to the requirements contained in F.5.3.4.1 through F.5.3.4.3. (Refer to FIGURE F-1.)

F.5.3.4.1 Work package identification information **<wpidinfo>**. Work package identification information is required for this work package (refer to 4.8.6.1).

F.5.3.4.2 Initial setup information. Initial setup information is not required for this work package.

F.5.3.4.3 Introduction **<intro>**. The verbatim text (below within the quotation marks) shall be included. The italicized text shall be replaced with the required system specific information or select the corresponding phrase for the specific system. The publication list shall identify the publication number and title in numerical sequence. If the publication is non-government, the source shall be given and shall be listed alphabetically by title.

Source: https://assist.dla.mil -- Downloaded: 2016-12-05T17:12Z
Check the source to verify that this is the current version before use.

"**INTRODUCTION**

SCOPE

This parts information (PI) lists and authorizes spares and repair parts; special tools; special test, measurement, and diagnostic equipment (TMDE); and other special support equipment required for performance of (*enter maintenance level*) maintenance of the (*enter item name*). It authorizes the requisitioning, issue, and disposition of spares, repair parts, and special tools as indicated by the source, maintenance, and recoverability (SMR) codes.

GENERAL

In addition to the Introduction work package, this PI is divided into the following work packages.

1. Repair Parts List Work Packages. Work packages containing lists of spares and repair parts authorized by this PI for use in the performance of maintenance. These work packages also include parts which must be removed for replacement of the authorized parts. Parts lists are composed of functional groups in ascending alphanumeric sequence, with the parts in each group listed in ascending figure and item number sequence. Sending units, brackets, filters, and bolts are listed with the component they mount on. Bulk materials are listed by item name in FIG. BULK at the end of the work packages. *(choose one of the following) Repair parts kits are listed separately in their own functional group and work package or Repair parts are listed at the end of the individual work packages.* Repair parts for reparable special tools are also listed in a separate work package. Items listed are shown on the associated illustrations.

2. Special Tools List Work Packages. Work packages containing lists of special tools, special TMDE, and special support equipment authorized by this PI (as indicated by Basis of Issue (BOI) information in the DESCRIPTION AND USABLE ON CODE (UOC) entry). Tools that are components of common tool sets and/or Class VII are not listed."

If at least one cross-reference index work package exists include the following:

"3. Cross-Reference Indexes Work Packages. There are (*enter applicable number*) cross-reference indexes work packages in this PI: (*enter applicable index titles: the National Stock Number (NSN) Index work package, the Part Number (P/N) Index work package, and the Reference Designator Index work package*). (*Enter applicable explanations: The National Stock Number Index work package refers you to the figure and item number. The Part Number Index work package refers you to the figure and item number. The Reference Designator Index work package refers you to the figure and item number.*)"

"EXPLANATION OF ENTRIES IN THE REPAIR PARTS LIST AND SPECIAL TOOLS LIST WORK PACKAGES

ITEM NO. (Entry 1). Indicates the number used to identify items called out in the illustration.

Source: https://assist.dla.mil -- Downloaded: 2016-12-05T17:12Z
Check the source to verify that this is the current version before use.

SMR CODE (Entry 2). The SMR code containing supply/requisitioning information, maintenance level authorization criteria, and disposition instruction, as shown in the following breakout. This entry may be subdivided into 4 subentries, one for each service.

TABLE 1. SMR Code Explanation.

Source Code XX	**Maintenance Code** XX		**Recoverability Code** X
1st two positions: How to get an item.	3rd position: Who can install, replace, or use the item.	4th position: Who can do complete repair* on the item	5th position: Who determines disposition action on unserviceable items.

*Complete Repair: Maintenance capacity, capability, and authority to perform all corrective maintenance tasks of the "Repair" function in a use/user environment in order to restore serviceability to a failed item.

Source Code. The source code tells you how you get an item needed for maintenance, repair, or overhaul of an end item/equipment. Explanations of source codes follow:

Source Code	**Application/Explanation**
PA PB PC PD PE PF PG PH PR PZ	Stock items; use the applicable NSN to requisition/request items with these source codes. They are authorized to the level indicated by the code entered in the third position of the SMR code. **NOTE** Items coded PC are subject to deterioration.
KD KF KB	Items with these codes are not to be requested/requisitioned individually. They are part of a kit which is authorized to the maintenance level indicated in the third position of the SMR code. The complete kit must be requisitioned and applied.
MF-Made at field level MH-Made at below depot sustainment level ML-Made at SRA MD-Made at depot MG-Navy only	Items with these codes are not to be requisitioned/requested individually. They must be made from bulk material which is identified by the P/N in the DESCRIPTION AND USABLE ON CODE (UOC) entry and listed in the bulk material group work package of the PI. If the item is authorized to you by the third position code of the SMR code, but the source code indicates it is made at higher level, order the item from the higher level of maintenance.

Source: https://assist.dla.mil -- Downloaded: 2016-12-05T17:12Z
Check the source to verify that this is the current version before use.

AF-Assembled by field level AH-Assembled by below depot sustainment level AL-Assembled by SRA AD-Assembled by depot AG-Navy only	Items with these codes are not to be requested/requisitioned individually. The parts that make up the assembled item must be requisitioned or fabricated and assembled at the level of maintenance indicated by the source code. If the third position of the SMR code authorizes you to replace the item, but the source code indicates the item is assembled at a higher level, order the item from the higher level of maintenance.
XA	Do not requisition an "XA" coded item. Order the next higher assembly.(Refer to NOTE below.)
XB	If an item is not available from salvage, order it using the CAGEC and P/N.
XC	Installation drawings, diagrams, instruction sheets, field service drawings; identified by manufacturer's P/N.
XD	Item is not stocked. Order an XD-coded item through local purchase or normal supply channels using the CAGEC and P/N given, if no NSN is available.

NOTE

Cannibalization or controlled exchange, when authorized, may be used as a source of supply for items with the above source codes except for those items source coded "XA" or those aircraft support items restricted by requirements of AR 750-1.

Maintenance Code. Maintenance codes tell you the level(s) of maintenance authorized to use and repair support items. The maintenance codes are entered in the third and fourth positions of the SMR code as follows:

Third Position. The maintenance code entered in the third position tells you the lowest maintenance level authorized to remove, replace, and use an item. The maintenance code entered in the third position will indicate authorization to the following levels of maintenance:

Maintenance Code	**Application/Explanation**
C*	Crew
F -	Field maintenance can remove, replace, and use the item.
H -	Below Depot Sustainment maintenance can remove, replace, and use the item.
L -	Specialized repair activity can remove, replace, and use the item.
G -	Afloat and ashore intermediate maintenance can remove, replace, and use the item (Navy only)
K -	Contractor facility can remove, replace, and use the item
Z -	Item is not authorized to be removed, replace, or used at any maintenance level
D -	Depot can remove, replace, and use the item.

Source: https://assist.dla.mil -- Downloaded: 2016-12-05T17:12Z
Check the source to verify that this is the current version before use.

*NOTE - Army may use C in the third position. However, for joint service publications, Army will use O.

Fourth Position. The maintenance code entered in the fourth position tells you whether or not the item is to be repaired and identifies the lowest maintenance level with the capability to do complete repair (perform all authorized repair functions).

NOTE

Some limited repair may be done on the item at a lower level of maintenance, if authorized by the Maintenance Allocation Chart (MAC) and SMR codes.

Maintenance Code	**Application/Explanation**
F -	Field is the lowest level that can do complete repair of the item.
H -	Below Depot Sustainment is the lowest level that can do complete repair of the item.
L -	Specialized repair activity (enter specialized repair activity designator) is the lowest level that can do complete repair of the item.
D -	Depot is the lowest level that can do complete repair of the item.
G -	Both afloat and ashore intermediate levels are capable of complete repair of item. (Navy only)
K -	Complete repair is done at contractor facility
Z -	Nonreparable. No repair is authorized.
B -	No repair is authorized. No parts or special tools are authorized for maintenance of "B" coded item. However, the item may be reconditioned by adjusting, lubricating, etc., at the user level.

Recoverability Code. Recoverability codes are assigned to items to indicate the disposition action on unserviceable items. The recoverability code is shown in the fifth position of the SMR code as follows:

Recoverability Code	**Application/Explanation**
Z -	Nonreparable item. When unserviceable, condemn and dispose of the item at the level of maintenance shown in the third position of the SMR code.
F -	Reparable item. When uneconomically reparable, condemn and dispose of the item at the field level.
H -	Reparable item. When uneconomically reparable, condemn and dispose of the item at the below depot sustainment level.
D -	Reparable item. When beyond lower level repair capability, return to depot. Condemnation and disposal of item are not authorized below depot level.
L -	Reparable item. Condemnation and disposal not authorized below Specialized Repair Activity (SRA)/TASMG.
A -	Item requires special handling or condemnation procedures because of specific reasons (such as precious metal content, high dollar value, critical material, or hazardous material). Refer to appropriate

Source: https://assist.dla.mil -- Downloaded: 2016-12-05T17:12Z
Check the source to verify that this is the current version before use.

Recoverability Code	**Application/Explanation**
	manuals/directives for specific instructions.
G -	Field level reparable item. Condemn and dispose at either afloat or ashore intermediate levels. (Navy only)
K -	Reparable item. Condemnation and disposal to be performed at contractor facility.

NSN (Entry 3). The NSN for the item is listed in this entry.

CAGEC (Entry 4). The Commercial and Government Entity Code (CAGEC) is a five-digit code which is used to identify the manufacturer, distributor, or Government agency/activity that supplies the item.

PART NUMBER (Entry 5). Indicates the primary number used by the manufacturer (individual, company, firm, corporation, or Government activity), which controls the design and characteristics of the item by means of its engineering drawings, specifications, standards, and inspection requirements to identify an item or range of items.

NOTE

When you use an NSN to requisition an item, the item you receive may have a different P/N from the number listed.

DESCRIPTION AND USABLE ON CODE (UOC) (Entry (6)). This entry includes the following information:

1. The federal item name, and when required, a minimum description to identify the item.

2. P/Ns of bulk materials are referenced in this entry in the line entry to be manufactured or fabricated.

3. Hardness Critical Item (HCI). A support item that provides the equipment with special protection from electromagnetic pulse (EMP) damage during a nuclear attack.

4. The statement END OF FIGURE appears just below the last item description in entry (6) for a given figure in both the repair parts list and special tools list work packages.

QTY (Entry (7)). The QTY (quantity per figure) entry indicates the quantity of the item used in the breakout shown on the illustration/figure, which is prepared for a functional group, subfunctional group, or an assembly. A "V" appearing in this entry instead of a quantity indicates that the quantity is variable and quantity may change from application to application. ”

(MC) Include for Marine Corps manuals only.

“USMC QTY per Equip (Entry 8). This entry accommodates the Marine Corps quantity per equipment requirement.”

Source: https://assist.dla.mil -- Downloaded: 2016-12-05T17:12Z
Check the source to verify that this is the current version before use.

When at least one cross-reference index work package exists include the following:

"EXPLANATION OF CROSS-REFERENCE INDEXES WORK PACKAGES FORMAT AND ENTRY

1. National Stock Number (NSN) Index Work Package. NSN's in this index are listed in National Item Identification Number (NIIN) sequence.

STOCK NUMBER Column. This column lists the NSN in NIIN sequence. The NIIN consists of the last nine digits of the NSN. When using this column to locate an item, ignore the first four digits of the NSN. However, the complete NSN should be used when ordering items by stock number.

For example, if the NSN is 5385-01-574-1476, the NIIN is 01-574-1476.

FIG. Entry This entry lists the number of the figure where the item is identified/located. The figures are in numerical order in the repair parts list and special tools list work packages.

ITEM Entry. The item number identifies the item associated with the figure listed in the adjacent FIG. entry. This item is also identified by the NSN listed on the same line.

2. Part Number (P/N) Index Work Package. P/Ns in this index are listed in ascending alphanumeric sequence (vertical arrangement of letter and number combinations which places the first letter or digit of each group in order A through Z, followed by the numbers 0 through 9 and each following letter or digit in like order).

PART NUMBER Entry. Indicates the P/N assigned to the item.

FIG. Entry. This entry lists the number of the figure where the item is identified/located in the repair parts list and special tools list work packages.

ITEM Entry. The item number is the number assigned to the item as it appears in the figure referenced in the adjacent figure number entry."

Include 3, as applicable.

"3. Reference Designator Index Work Package. Reference designators in this index are listed in ascending alphanumeric sequence (vertical arrangement of letter and number combination which places the first letter or digit of each group in order "A" through "Z," followed by the numbers "0" through "9" and each following letter or digit in like order).

REFERENCE DESIGNATOR Entry. Indicates the reference designator assigned to the item.

FIG. Entry. This entry lists the number of the figure where the item is identified/located in the repair parts list or special tools list work package.

ITEM Entry. The item number is the number assigned to the item as it appears in the figure referenced in the adjacent figure number entry."

"SPECIAL INFORMATION

UOC. The UOC appears in the lower left corner of the Description Entry heading. Usable on codes are shown as "UOC: ..." in the Description Entry (justified left) on the first line under the applicable item/nomenclature. Uncoded items are applicable to all models. Identification of the UOCs used in the PI are:

Source: https://assist.dla.mil -- Downloaded: 2016-12-05T17:12Z
Check the source to verify that this is the current version before use.

Code	**Used On**
PAA	Model M114
PAB	Model M114A
PAC	Model M114B

Include appropriate UOC content, as applicable.

"Fabrication Instructions. Bulk materials required to manufacture items are listed in the bulk material functional group of this PI. Part numbers for bulk material are also referenced in the Description Entry of the line item entry for the item to be manufactured/fabricated. Detailed fabrication instructions for items source coded to be manufactured or fabricated are found in (enter applicable TM number).

Index Numbers. Items which have the word BULK in the figure entry will have an index number shown in the item number entry. This index number is a cross-reference between the NSN / P/N index work packages and the bulk material list in the repair parts list work package."

For a combined narrative-PI manual associated publications shall not be included.

"Associated Publications. The publication(s) listed below pertains to the (enter item name):

Publication	**Short Title**"

The following paragraph shall appear only in the unit maintenance PI special instructions.

"Illustrations List. The illustrations in this PI contain field authorized items. Illustrations published in (enter applicable TM number for the higher maintenance level PI, e.g., for field, below depot sustainment, etc.) that contain field authorized items also appear in this PI. The tabular list in the repair parts list work package contains only those parts coded "F" in the third position of the SMR code, therefore, there may be a break in the item number sequence."

HOW TO LOCATE REPAIR PARTS

1. When NSNs or P/Ns Are Not Known.

First. Using the table of contents, determine the assembly group to which the item belongs. This is necessary since figures are prepared for assembly groups and subassembly groups, and lists are divided into the same groups.

Second. Find the figure covering the functional group or the subfunctional group to which the item belongs.

Third. Identify the item on the figure and note the number(s).

Fourth. Look in the repair parts list work packages for the figure and item numbers. The NSNs and part numbers are on the same line as the associated item numbers.

Include 2 and 3 only if the PI has a NSN and part number index work package.

2. When NSN Is Known.

First. If you have the NSN, look in the STOCK NUMBER entry of the NSN index work package. The NSN is arranged in NIIN sequence. Note the figure and item number next to the NSN.

Source: https://assist.dla.mil -- Downloaded: 2016-12-05T17:12Z
Check the source to verify that this is the current version before use.

Second. Turn to the figure and locate the item number. Verify that the item is the one you are looking for.

3. When P/N Is Known.

First. If you have the P/N and not the NSN, look in the PART NUMBER entry of the P/N index work package. Identify the figure and item number.

Second. Look up the item on the figure in the applicable repair parts list work package.

Include 4 only if the PI has a reference designator index work package.

4. When Reference Designator Is Known.

First. If you know the reference designator, look in the REFERENCE DESIGNATOR entry of the reference designator index work package. Note the figure and item number.

Second. Turn to the figure and locate the item number. Verify that the item is the one you are looking for.

ABBREVIATIONS

Abbreviation	**Explanation**
Include uncommon abbreviations used in the PI. List/define those not found in ASME Y14.38."	

F.5.3.4.4 Indexed PI illustration and legend **<figure>**. When specified by the acquiring activity an indexed PI illustration and legend shall be added to the end of the introduction work package. Complex weapon systems have numerous repair parts lists associated to the equipment and the illustration and legend assists in locating the repair parts information. The indexed PI illustration shall provide an exploded view of the equipment with index numbers pointing to the major functional groups. The illustration shall have a legend that defines the item number, major functional group figure title and figure number (Refer to FIGURE F-2).

F.5.3.4A Introduction work package **<introwp> (Aviation Systems)**. The introduction work package shall be prepared to the requirements contained in F.5.3.4.1 through F.5.3.4.3. (Refer to FIGURE F-1.)

F.5.3.4.1A Work package identification information **<wpidinfo>**. Work package identification information is required for this work package (refer to 4.8.6.1).

F.5.3.4.2A Initial setup information. Initial setup information is not required for this work package.

F.5.3.4.3A Introduction **<intro>**. The verbatim text (below within the quotation marks) shall be included. The italicized text shall be replaced with the required system specific information or select the corresponding phrase for the specific system. The publication list shall identify the publication number and title in numerical sequence. If the publication is non-government, the source shall be given and shall be listed alphabetically by title.

Source: https://assist.dla.mil -- Downloaded: 2016-12-05T17:12Z
Check the source to verify that this is the current version before use.

"**INTRODUCTION**

SCOPE

This parts information (PI) lists and authorizes spares and repair parts; special tools; special test, measurement, and diagnostic equipment (TMDE); and other special support equipment required for performance of (*enter maintenance level*) maintenance of the (*enter item name*). It authorizes the requisitioning, issue, and disposition of spares, repair parts, and special tools as indicated by the source, maintenance, and recoverability (SMR) codes.

GENERAL

In addition to the Introduction work package, this PI is divided into the following work packages.

1. Repair Parts List Work Packages. Work packages containing lists of spares and repair parts authorized by this PI for use in the performance of maintenance. These work packages also include parts which must be removed for replacement of the authorized parts. Parts lists are composed of functional groups in ascending alphanumeric sequence, with the parts in each group listed in ascending figure and item number sequence. Sending units, brackets, filters, and bolts are listed with the component they mount on. Bulk materials are listed by item name in FIG. BULK at the end of the work packages. *(choose one of the following) Repair parts kits are listed separately in their own functional group and work package or Repair parts are listed at the end of the individual work packages.* Repair parts for reparable special tools are also listed in a separate work package. Items listed are shown on the associated illustrations.

2. Special Tools List Work Packages. Work packages containing lists of special tools, special TMDE, and special support equipment authorized by this PI (as indicated by Basis of Issue (BOI) information in the DESCRIPTION AND USABLE ON CODE (UOC) entry). Tools that are components of common tool sets and/or Class VII are not listed."

If at least one cross-reference index work package exists include the following:

"3. Cross-Reference Indexes Work Packages. There are (*enter applicable number*) cross-reference indexes work packages in this PI: (*enter applicable index titles: the National Stock Number (NSN) Index work package, the Part Number (P/N) Index work package, and the Reference Designator Index work package*). (*Enter applicable explanations: The National Stock Number Index work package refers you to the figure and item number. The Part Number Index work package refers you to the figure and item number. The Reference Designator Index work package refers you to the figure and item number.*)"

"EXPLANATION OF ENTRIES IN THE REPAIR PARTS LIST AND SPECIAL TOOLS LIST WORK PACKAGES

ITEM NO. (Entry 1). Indicates the number used to identify items called out in the illustration.

Source: https://assist.dla.mil -- Downloaded: 2016-12-05T17:12Z
Check the source to verify that this is the current version before use.

SMR CODE (Entry 2). The SMR code containing supply/requisitioning information, maintenance level authorization criteria, and disposition instruction, as shown in the following breakout. This entry may be subdivided into 4 subentries, one for each service.

TABLE 1. SMR Code Explanation.

Source Code XX	**Maintenance Code** XX		**Recoverability Code** X
1st two positions: How to get an item.	3rd position: Who can install, replace, or use the item.	4th position: Who can do complete repair* on the item	5th position: Who determines disposition action on unserviceable items.

*Complete Repair: Maintenance capacity, capability, and authority to perform all corrective maintenance tasks of the "Repair" function in a use/user environment in order to restore serviceability to a failed item.

Source Code. The source code tells you how you get an item needed for maintenance, repair, or overhaul of an end item/equipment. Explanations of source codes follow:

Source Code	**Application/Explanation**
PA PB PC PD PE PF PG PH PR PZ	Stock items; use the applicable NSN to requisition/request items with these source codes. They are authorized to the level indicated by the code entered in the third position of the SMR code. **NOTE** Items coded PC are subject to deterioration.
KD KF KB	Items with these codes are not to be requested/requisitioned individually. They are part of a kit which is authorized to the maintenance level indicated in the third position of the SMR code. The complete kit must be requisitioned and applied.
MO-Made at AMC level MF-Made at ASB level ML-Made at TASMG MD-Made at depot MG-Navy only	Items with these codes are not to be requisitioned/requested individually. They must be made from bulk material which is identified by the P/N in the DESCRIPTION AND USABLE ON CODE (UOC) entry and listed in the bulk material group work package of the PI. If the item is authorized to you by the third position code of the SMR code, but the source code indicates it is made at higher level, order the item from the higher level of maintenance.

Source: https://assist.dla.mil -- Downloaded: 2016-12-05T17:12Z
Check the source to verify that this is the current version before use.

AO-Assembled at AMC level AF-Assembled by ASB level AL-Assembled by TASMG AD-Assembled by depot AG-Navy only	Items with these codes are not to be requested/requisitioned individually. The parts that make up the assembled item must be requisitioned or fabricated and assembled at the level of maintenance indicated by the source code. If the third position of the SMR code authorizes you to replace the item, but the source code indicates the item is assembled at a higher level, order the item from the higher level of maintenance.
XA	Do not requisition an "XA" coded item. Order the next higher assembly.(Refer to NOTE below.)
XB	If an item is not available from salvage, order it using the CAGEC and P/N.
XC	Installation drawings, diagrams, instruction sheets, field service drawings; identified by manufacturer's P/N.
XD	Item is not stocked. Order an XD-coded item through local purchase or normal supply channels using the CAGEC and P/N given, if no NSN is available.

NOTE

Cannibalization or controlled exchange, when authorized, may be used as a source of supply for items with the above source codes except for those items source coded "XA" or those aircraft support items restricted by requirements of AR 750-1.

Maintenance Code. Maintenance codes tell you the level(s) of maintenance authorized to use and repair support items. The maintenance codes are entered in the third and fourth positions of the SMR code as follows:

Third Position. The maintenance code entered in the third position tells you the lowest maintenance level authorized to remove, replace, and use an item. The maintenance code entered in the third position will indicate authorization to the following levels of maintenance:

Maintenance Code	**Application/Explanation**
O-	AMC maintenance can remove, replace, and use the item
F -	ASB maintenance can remove, replace, and use the item.
L -	TASMG can remove, replace, and use the item.
G -	Afloat and ashore intermediate maintenance can remove, replace, and use the item (Navy only)
K -	Contractor facility can remove, replace, and use the item
Z -	Item is not authorized to be removed, replace, or used at any maintenance level
D -	Depot can remove, replace, and use the item.

Source: https://assist.dla.mil -- Downloaded: 2016-12-05T17:12Z
Check the source to verify that this is the current version before use.

Fourth Position. The maintenance code entered in the fourth position tells you whether or not the item is to be repaired and identifies the lowest maintenance level with the capability to do complete repair (perform all authorized repair functions).

NOTE

Some limited repair may be done on the item at a lower level of maintenance, if authorized by the Maintenance Allocation Chart (MAC) and SMR codes.

Maintenance Code	**Application/Explanation**
O-	AMC is the lowest level that can do complete repair of item
F -	ASB is the lowest level that can do complete repair of the item.
L -	TASMG is the lowest level that can do complete repair of the item.
D -	Depot is the lowest level that can do complete repair of the item.
G -	Both afloat and ashore intermediate levels are capable of complete repair of item. (Navy only)
K -	Complete repair is done at contractor facility
Z -	Nonreparable. No repair is authorized.
B -	No repair is authorized. No parts or special tools are authorized for maintenance of "B" coded item. However, the item may be reconditioned by adjusting, lubricating, etc., at the user level.

Recoverability Code. Recoverability codes are assigned to items to indicate the disposition action on unserviceable items. The recoverability code is shown in the fifth position of the SMR code as follows:

Recoverability Code	**Application/Explanation**
Z -	Nonreparable item. When unserviceable, condemn and dispose of the item at the level of maintenance shown in the third position of the SMR code.
O	Reparable item. When uneconomically reparable, condemn and dispose of the item at the AMC level.
F -	Reparable item. When uneconomically reparable, condemn and dispose of the item at the ASB level.
D -	Reparable item. When beyond lower level repair capability, return to depot. Condemnation and disposal of item are not authorized below depot level.
L -	Reparable item. Condemnation and disposal not authorized below TASMG.
A -	Item requires special handling or condemnation procedures because of specific reasons (such as precious metal content, high dollar value, critical material, or hazardous material). Refer to appropriate manuals/directives for specific instructions.
G -	Field level reparable item. Condemn and dispose at either afloat or ashore intermediate levels. (Navy only)
K -	Reparable item. Condemnation and disposal to be performed at contractor facility.

Source: https://assist.dla.mil -- Downloaded: 2016-12-05T17:12Z
Check the source to verify that this is the current version before use.

NSN (Entry 3). The NSN for the item is listed in this entry.

CAGEC (Entry 4). The Commercial and Government Entity Code (CAGEC) is a five-digit code which is used to identify the manufacturer, distributor, or Government agency/activity that supplies the item.

PART NUMBER (Entry 5). Indicates the primary number used by the manufacturer (individual, company, firm, corporation, or Government activity), which controls the design and characteristics of the item by means of its engineering drawings, specifications, standards, and inspection requirements to identify an item or range of items.

NOTE

When you use an NSN to requisition an item, the item you receive may have a different P/N from the number listed.

DESCRIPTION AND USABLE ON CODE (UOC) (Entry (6)). This entry includes the following information:

1. The federal item name, and when required, a minimum description to identify the item.

2. P/Ns of bulk materials are referenced in this entry in the line entry to be manufactured or fabricated.

3. Hardness Critical Item (HCI). A support item that provides the equipment with special protection from electromagnetic pulse (EMP) damage during a nuclear attack.

4. The statement END OF FIGURE appears just below the last item description in entry (6) for a given figure in both the repair parts list and special tools list work packages.

QTY (Entry (7)). The QTY (quantity per figure) entry indicates the quantity of the item used in the breakout shown on the illustration/figure, which is prepared for a functional group, subfunctional group, or an assembly. A "V" appearing in this entry instead of a quantity indicates that the quantity is variable and quantity may change from application to application. ”

(MC) Include for Marine Corps manuals only.

“USMC QTY per Equip (Entry 8). This entry accommodates the Marine Corps quantity per equipment requirement.”

When at least one cross-reference index work package exists include the following:

“EXPLANATION OF CROSS-REFERENCE INDEXES WORK PACKAGES FORMAT AND ENTRY

1. National Stock Number (NSN) Index Work Package. NSN’s in this index are listed in National Item Identification Number (NIIN) sequence.

STOCK NUMBER Column. This column lists the NSN in NIIN sequence. The NIIN consists of the last nine digits of the NSN. When using this column to locate an item, ignore the first four digits of the NSN. However, the complete NSN should be used when ordering items by stock number.

For example, if the NSN is 5385-01-574-1476, the NIIN is 01-574-1476.

Source: https://assist.dla.mil -- Downloaded: 2016-12-05T17:12Z
Check the source to verify that this is the current version before use.

FIG. Entry This entry lists the number of the figure where the item is identified/located. The figures are in numerical order in the repair parts list and special tools list work packages.

ITEM Entry. The item number identifies the item associated with the figure listed in the adjacent FIG. entry. This item is also identified by the NSN listed on the same line.

2. Part Number (P/N) Index Work Package. P/Ns in this index are listed in ascending alphanumeric sequence (vertical arrangement of letter and number combinations which places the first letter or digit of each group in order A through Z, followed by the numbers 0 through 9 and each following letter or digit in like order).

PART NUMBER Entry. Indicates the P/N assigned to the item.

FIG. Entry. This entry lists the number of the figure where the item is identified/located in the repair parts list and special tools list work packages.

ITEM Entry. The item number is the number assigned to the item as it appears in the figure referenced in the adjacent figure number entry."

Include 3, as applicable.

"3. Reference Designator Index Work Package. Reference designators in this index are listed in ascending alphanumeric sequence (vertical arrangement of letter and number combination which places the first letter or digit of each group in order "A" through "Z," followed by the numbers "0" through "9" and each following letter or digit in like order).

REFERENCE DESIGNATOR Entry. Indicates the reference designator assigned to the item.

FIG. Entry. This entry lists the number of the figure where the item is identified/located in the repair parts list or special tools list work package.

ITEM Entry. The item number is the number assigned to the item as it appears in the figure referenced in the adjacent figure number entry."

"SPECIAL INFORMATION

UOC. The UOC appears in the lower left corner of the Description Entry heading. Usable on codes are shown as "UOC: ..." in the Description Entry (justified left) on the first line under the applicable item/nomenclature. Uncoded items are applicable to all models. Identification of the UOCs used in the PI are:

Code	**Used On**
PAA	Model M114
PAB	Model M114A
PAC	Model M114B

Include appropriate UOC content, as applicable.

"Fabrication Instructions. Bulk materials required to manufacture items are listed in the bulk material functional group of this PI. Part numbers for bulk material are also referenced in the Description Entry of the line item entry for the item to be manufactured/fabricated. Detailed fabrication instructions for items source coded to be

Source: https://assist.dla.mil -- Downloaded: 2016-12-05T17:12Z
Check the source to verify that this is the current version before use.

manufactured or fabricated are found in (enter applicable TM number).

Index Numbers. Items which have the word BULK in the figure entry will have an index number shown in the item number entry. This index number is a cross-reference between the NSN / P/N index work packages and the bulk material list in the repair parts list work package."

For a combined narrative-PI manual associated publications shall not be included.

"Associated Publications. The publication(s) listed below pertains to the (enter item name):

Publication **Short Title**"

The following paragraph shall appear only in the unit maintenance PI special instructions.

"Illustrations List. The illustrations in this PI contain field authorized items. Illustrations published in (enter applicable TM number for the higher maintenance level PI, e.g., for field, below depot sustainment, etc.) that contain field authorized items also appear in this PI. The tabular list in the repair parts list work package contains only those parts coded "O" in the third position of the SMR code, therefore, there may be a break in the item number sequence."

HOW TO LOCATE REPAIR PARTS

1. When NSNs or P/Ns Are Not Known.

First. Using the table of contents, determine the assembly group to which the item belongs. This is necessary since figures are prepared for assembly groups and subassembly groups, and lists are divided into the same groups.

Second. Find the figure covering the functional group or the subfunctional group to which the item belongs.

Third. Identify the item on the figure and note the number(s).

Fourth. Look in the repair parts list work packages for the figure and item numbers. The NSNs and part numbers are on the same line as the associated item numbers.

Include 2 and 3 only if the PI has a NSN and part number index work package.

2. When NSN Is Known.

First. If you have the NSN, look in the STOCK NUMBER entry of the NSN index work package. The NSN is arranged in NIIN sequence. Note the figure and item number next to the NSN.

Second. Turn to the figure and locate the item number. Verify that the item is the one you are looking for.

3. When P/N Is Known.

First. If you have the P/N and not the NSN, look in the PART NUMBER entry of the P/N index work package. Identify the figure and item number.

Second. Look up the item on the figure in the applicable repair parts list work package.

Source: https://assist.dla.mil -- Downloaded: 2016-12-05T17:12Z
Check the source to verify that this is the current version before use.

Include 4 only if the PI has a reference designator index work package.

4. When Reference Designator Is Known.

First. If you know the reference designator, look in the REFERENCE DESIGNATOR entry of the reference designator index work package. Note the figure and item number.

Second. Turn to the figure and locate the item number. Verify that the item is the one you are looking for.

ABBREVIATIONS

Abbreviation	**Explanation**
Include uncommon abbreviations used in the PI. List/define those not found in ASME Y14.38."	

F.5.3.4.4A Indexed PI illustration and legend **<figure>**. When specified by the acquiring activity an indexed PI illustration and legend shall be added to the end of the introduction work package. Complex weapon systems have numerous repair parts lists associated to the equipment and the illustration and legend assists in locating the repair parts information. The indexed PI illustration shall provide an exploded view of the equipment with index numbers pointing to the major functional groups. The illustration shall have a legend that defines the item number, major functional group figure title and figure number (Refer to FIGURE F-2).

F.5.3.5 Repair parts list work package **<plwp>**. Each repair parts list work package shall be prepared and consist of work package identification information **<wpidinfo>** (see 4.8.6.1**)**, a figure and its associated repair parts lists **<pi.category>**. Refer to MIL-HDBK-1222 for an example of a repair parts list work package and a repair parts list illustration. For less complex equipment with a small amount of PI, the PI can be contained in a single work package or a few work packages each with multiple figures/lists. For complex equipment, each PI work package shall have one figure and one parts list. The figure can have multiple sheets. Initial setup information is not required for this work package.

F.5.3.5.1 Work package identification information **<wpidinfo>**. Work package identification information is required for this work package (refer to 4.8.6.1).

F.5.3.5.2 Initial setup information. Initial setup information is not required for this work package.

F.5.3.5.3 Repair parts list **<fncgrp>**. The repair parts list is broken down by functional groups. Each functional group for the repair parts list shall have a figure <**figure**> or multiple figures and a list of repair part items **<pi.item>** as specified in F.5.3.5.3.1 and F.5.3.5.3.2. The functional group shall contain header information consisting of the functional group code <**fnccode**>, the figure number, and the title <**fnctitle**>. The statement "**END OF FIGURE**" shall appear below the last item described in the functional group for each figure in the repair parts list and the special tools list work packages. This information shall be displayed on each screen containing parts information.

F.5.3.5.3.1 Repair parts figure title **<title>**. When available, figure titles shall be taken from provisioning documentation. The PI figure title, the functional group title and the applicable MAC title shall be the same. When there is no provisioning documentation, the acquiring activity or contractor shall develop a title. This title shall be used consistently throughout the TM.

Source: https://assist.dla.mil -- Downloaded: 2016-12-05T17:12Z
Check the source to verify that this is the current version before use.

F.5.3.5.3.2 Repair part item **<pi.item>**. Each repair part shall contain the requirements in F.5.3.5.3.2.1 through F.5.3.5.3.2.109 and may include the optional information F.5.3.5.3.2.10 through F.5.3.5.3.2.17.

F.5.3.5.3.2.1 Item number entry **<callout>**. Items shall be listed on the repair parts list (in the ITEM NO. entry) by the same callout number shown on the associated figure. The items shall be listed in ascending alphanumeric sequence.

F.5.3.5.3.2.2 SMR code entry **<smr>**. The SMR code entry shall include the SMR code assigned to each applicable item. For multiple service TMs, the SMR code entry shall be subdivided into subentries, one for each service involved. Each service shall identify the appropriate SMR code subentry. When services share the same SMR code for an item, the SMR code shall be listed for each service. See MIL-HDBK-1222 for example of parts information for multi-service manual.

F.5.3.5.3.2.3 NSN entry **<nsn>**. The NSN entry shall be included for those items that have been assigned an NSN.

F.5.3.5.3.2.4 Commercial and Government Entity Code (CAGEC) **<cageno>** entry. The applicable five-digit CAGEC number, as listed in Catalog Handbook H4/H8, shall appear in the CAGEC entry.

F.5.3.5.3.2.5 Part number **<partno>** entry. The part number is listed in the PART NUMBER entry.

F.5.3.5.3.2.6 Description. The item description shall consist of the federal item name **<name>** (taken from Federal Supply Cataloging Handbook H6) and, if necessary, a minimum description **<desc>** to further identify the item. When provisioning data is used, the **<desc>** shall consist of the data from the provisioning document. If the item is a Hardness Critical Item, the symbol HCI shall precede the item name. The item description shall be displayed in such a manner as to conspicuously show the components of assemblies and next higher assemblies relationships.

a. Assembled items. Spare and repair parts that are part of a nonstocked assembled item (source coded "AO", "AF", "AH", or "AD") shall be assigned item numbers on illustrations and shall be listed in item number sequence on the repair parts list. These items/parts shall be listed immediately below the item to be assembled on the repair parts list. When a particular illustration does not show the parts breakdown of the nonstocked assembly, reference shall be made to the breakdown illustration in the PI. Instructions, drawings, charts, and tables showing how to assemble assemblies source coded "A( )" shall not appear in the PI, but shall appear in the narrative maintenance TM.

b. Manufactured items. All items source coded "MO", "MF", "MH", or "MD" shall have the statement in the DESCRIPTION entry **<desc>** as follows: "MAKE FROM (enter applicable bulk material or other replaceable item name, CAGEC, and part number)." Material that is used to make items shall also be shown in a separate bulk items work package **<bulk_itemswp>** (see F.5.3.8). Instructions, drawings, charts, and tables required to show how items are made shall not be contained in the PI but shall appear in the narrative maintenance TM. This is normally specified in the illustrated list of manufactured items **<manuwp>** (see E.5.3.8.4.10) when it is specified by the acquiring activity.

Source: https://assist.dla.mil -- Downloaded: 2016-12-05T17:12Z
Check the source to verify that this is the current version before use.

F.5.3.5.3.2.7 UOC **<uoc>**. When an item has multi-configurations or multi-models use, the three-position alphanumeric UOC representing the applicable configuration in which the item is used shall be placed on the last line under the item description. The letters "UOC:" followed by the applicable UOC shall be indented. When an item is used on all configurations or when only one configuration is covered by the PI, UOCs shall not be shown.

F.5.3.5.3.2.8 Serial number application **<usbefserno>**. When part numbers of spare/repair items are not the same for all serial numbered equipment of the same model, a statement identifying the Usable Effective (USBL EFF) serial numbers shall be added to the item description <**desc**> (e.g., USBL EFF SER NOS 1719-1941). When an item is used on all models or when only one configuration is covered by the PI, serial number shall not be shown.

F.5.3.5.3.2.9 Quantity entry **<qty>**. The number in the QTY entry shall represent the number of times the item appears in the illustration/figure with the associated item number. When a definite quantity cannot be determined because the number of uses per equipment or the size/length of an item may vary with each equipment, the letter V shall be placed in the left position of the QTY entry.

F.5.3.5.3.2.10 (MC) USMC Quantity per end item <**qty_per_end_item**>. The number in the USMC QTY Per Equip column shall represent the total number of times the part appears in all the repair parts lists.

F.5.3.5.3.2.11 Mandatory Replacement <**manrep**>. Information on mandatory replacement may be included.

F.5.3.5.3.2.12 Unit of Measure <**um**>. The unit of measure for the item may be included.

F.5.3.5.3.2.13 Unit of Issue <**ui**>. The unit of issue for the item may be included.

F.5.3.5.3.2.14 Reference Designator <**refdes**>. The reference designator for the item may be included.

F.5.3.5.3.2.15 Next Higher Assembly <**nha**>. Information on the next higher assembly for the item may be included.

F.5.3.5.3.2.16 Parts Breakdown Reference <**parts.breakdown.ref**>. A reference to parts breakdown for the item may be included.

F.5.3.5.3.2.17 Other Characteristics <**otherchar**>. Any other information not previously covered may be included as required.

F.5.3.5.4 Kits and kit repair parts. Kits and repair parts (source coded "KD", "KF", or "KB") shall conform to the format of either option 1 or option 2, as specified by the acquiring Activity. Refer to MIL-HDBK-1222 for examples of option 1 and option 2 kit breakdowns. Only one option is to be used in weapons systems PI listings.

a. Option 1 (kits). Option 1 kits shall appear at the end of the associated parts list. As specified by the acquiring activity, the ITEM NO. entry <**callout**> for kits shall be either left blank or list an alphabetical character(s). The QTY entry <**qty**> for kits shall be a V (variable) when the exact quantity may vary.

b. Option 1 (parts) **<kititem>**. Option 1 kit repair parts shall be listed with their applicable figure and appear in item number sequence. The statement "part of Kit P/N (enter kit P/N)" shall follow item name **<name>**. Kit repair parts shall also be listed under the kit

Source: https://assist.dla.mil -- Downloaded: 2016-12-05T17:12Z
Check the source to verify that this is the current version before use.

list at the end of the parts list. Parts of the kit list shall be indented and listed alphabetically by item name or in item number sequence immediately below the kit item name. The quantity **<qty>** (in parentheses), figure, and item number **<callout>** shall follow the repair part item name.

c. Option 2 (kits) **<kitswp>**. Option 2 kits shall be listed in the kit parts list work package **<kitswp>** (see F.5.3.6.3.1).

d. Option 2 (parts) <**pi.item**>. Option 2 kit repair parts shall appear in the parts list by item number as shown on the associated figure. They shall be listed in item number sequence. The statement "PART OF KIT P/N (enter kit part number)" shall follow the item name.

F.5.3.5.5 Expendable and durable items. Expendable and durable items shall not be listed in the PI. These items shall appear in the expendable and durable items work package **<explistwp>** (see G.5.6) in the Support Information.

F.5.3.6 Repair parts for special tools work package **<stl_partswp>**. The special tools repair parts list work package shall be prepared when all of the following conditions in a through c are met. The work package shall follow the last repair parts list work package **<plwp>** and shall precede the kit parts list work package **<kitswp>** and bulk items work package **<bulk_itemswp>**. The work package data requirements are specified in F.5.3.6.1 through F.5.3.6.3.1.

a. The PI identifies special tools in the special tools list work package (see F.5.3.8.1).

b. The special tool has repair parts that may be replaced at any maintenance level covered in the TM.

c. The special tool does not have repair instructions and parts listed in a technical manual for the special tool.

F.5.3.6.1 Work package identification information **<wpidinfo>**. Work package identification information is required for this work package (refer to 4.8.6.1).

F.5.3.6.2 Initial setup information. Initial setup information is not required for this work package.

F.5.3.6.3 Special tools repair parts items list **<pi.category>**. The special tools repair parts items list requirements in (see F.5.3.5.3.2) shall be used except as specified in F.5.3.6.3.1.

F.5.3.6.3.1 Functional group header **<fncgrp>**. The functional group header shall precede the first special tools repair part item in the DESCRIPTION AND USABLE ON CODE (UOC) column. The functional group number and title **<fnccode>** shall be “SPECIAL TOOLS (REPAIR PARTS)” appearing on the top line(s). The next line(s) below shall be the figure number and the figure title **<fnctitle>**.

F.5.3.7 Kit parts list work package **<kitswp>**. A kits parts work package <**kitswp**> shall be prepared when kit parts are listed separately in accordance with F.5.3.5.3.2.5.b (Option 2 (kits)). The work package shall follow the last repair parts list work package **<plwp>** or repair parts for special tools list work package **<stl_partswp>**, when provided, and shall precede the bulk items list work package **<bulk_itemswp>**, if provided. The work package consists of one or more kits part item lists **<pi.category>** organized by functional group. The work package data requirements are specified in F.5.3.7.1 through F.5.3.7.3.

Source: https://assist.dla.mil -- Downloaded: 2016-12-05T17:12Z
Check the source to verify that this is the current version before use.

F.5.3.7.1 Work package identification information **<wpidinfo>**. Work package identification information is required for this work package (refer to 4.8.6.1).

F.5.3.7.2 Initial setup information. Initial setup information is not required for this work package.

F.5.3.7.3 Kits part items list **<pi.category>**. The kits part items list shall be listed alphanumerically by part number in the PART NUMBER column. The requirements defined in F.5.3.5.3 shall be used except as specified in F.5.3.7.3.1 through F.5.3.7.3.3.

F.5.3.7.3.1 Functional group header **<fncgrp>**. The functional group header shall precede the first bulk item in the description<**desc**>. The functional group number and title **<fnccode>** shall be "REPAIR KITS" appearing on the top line(s). The next line(s) below shall be the figure number and the figure title **<fnctitle>**.

F.5.3.7.3.2 Kit part item group **<kititem>**. Parts in the kit group, in the description <**desc**>, shall be indented two positions and listed alphabetically by item name or in item number sequence under their kit name. Kit parts shall be listed by item names **<name>**, the quantity (in parentheses) **<qty>**, the figure number, and the item numbers **<callout>** that appear in the basic parts list.

F.5.3.7.3.3 Kits part item quantity **<qty>**. The QTY column entry for kits part shall contain a V (variable) when the exact quantity may vary.

F.5.3.8 Bulk items work package **<bulk_itemswp>**. A bulk items work package shall be prepared whenever bulk items are required in the repair of any parts listed in a parts list, special tool list or repair kit.

F.5.3.8.1 Work package identification information **<wpidinfo>**. Work package identification information is required for this work package (refer to 4.8.6.1).

F.5.3.8.2 Initial setup information. Initial setup information is not required for this work package.

F.5.3.8.3 Bulk item **<pi.item>**. Items in the bulk items list shall be listed alphabetically by item name in the description <**desc**>. The requirements defined in F.5.3.5.3.2 shall be used except as specified in F.5.3.8.3.1 and F.5.3.8.3.2. Refer to MIL-HDBK-1222 for an example.

F.5.3.8.3.1 ITEM column **<callout>**. Numbers in the ITEM column of bulk material list apply to the FIG. BULK only and shall not be associated with item numbers (callouts appearing on the illustrations/figures).

F.5.3.8.3.2 Functional group header **<fncgrp>**. The functional group header shall precede the first bulk item in the description <**desc**>. The functional group number and title **<fnccode>** shall be "BULK MATERIAL" appearing on the top line(s). The next line(s) below shall be the figure number and the figure title **<fnctitle>** and titled "FIG. BULK".

F.5.3.9 Special tools list work package **<stlwp>**. A special tools list work package shall be prepared for special tools, special TMDE, and other special support equipment authorized for maintenance of the end item/assembly. All repair parts for the special tool shall be listed in this work package that have their own TM shall not be listed in the repair parts for special tools list work package (see F.5.3.6). These tools shall be listed in the format and data requirement in F.5.3.9.1 through F.5.3.9.3.6. Refer to MIL-HDBK-1222 for an example.

Source: https://assist.dla.mil -- Downloaded: 2016-12-05T17:12Z
Check the source to verify that this is the current version before use.

F.5.3.9.1 Work package identification information **<wpidinfo>**. Work package identification information is required for this work package (refer to 4.8.6.1).

F.5.3.9.2 Initial setup information. Initial setup information is not required for this work package.

F.5.3.9.3 Special tools list **<pi.category>**. The special tools list requirements in F.5.3.5.3 shall be used except as specified in F.5.3.9.3.1 through F.5.3.9.3.5.

F.5.3.9.3.1 Item number column. Items shall be listed on the special tools list (in the ITEM NO. entry) by the same callout number shown on the associated figure. The items shall be listed in ascending alphanumeric sequence.

F.5.3.9.3.2 Functional grouping **<fncgrp>**. Items shall be listed under a functional group(s) titled **<fnctitle>** SPECIAL TOOLS. Items within the group shall be listed in ascending figure and item number sequence.

F.5.3.9.3.3 D-coded items. When a depot level PI does not exist and items are maintained at depot level, they shall be identified with a "D" in the third position of the SMR code in the highest level PI prepared.

F.5.3.9.3.4 Basis of Issue (BOI) **<boi>**. The last line entry(s) in the description <**desc**> for individual items, sets, or kits shall be the BOI **<boi>**. The BOI shall indicate the quantity of the items, i.e., sets, or kits authorized to support a quantity of end items/assembly(s) or a specific military unit. For example, BOI: 1 auth for 1-12 equip or BOI: 1 per BN HQ when BN has SVC CO.

F.5.3.9.3.5 Quantity. The QTY column shall be left blank.

F.5.3.9.3.6 Components list **<kititem>**. Components of special tool sets and kits, in the description <**desc**>, shall be listed in figure and item number sequence <**callout**>. The component shall be indented two positions and listed by item name **<name>**, the figure number, and the item numbers <**callout**>. Quantities of components **<qty>** shall be included in BOI statement (see F.5.3.9.3.4).

F.5.3.10 Cross-reference index work packages.

F.5.3.10.1 National stock number (NSN) index work package **<nsnindxwp>**. When specified by the acquiring activity, this work package shall be prepared. The index (**standard information**) shall be in ascending numeric sequence by the National Item Identification Number (NIIN) (the last nine digits of the NSN). If this work package is required, a part number index work package **<pnindxwp>** shall also be prepared. This index shall be listed in the format and data requirement in F.5.3.10.1.1 through F.5.3.10.1.3. Refer to MIL-HDBK-1222 for an example.

F.5.3.10.1.1 Work package identification information **<wpidinfo>**. Work package identification information is required for this work package (refer to 4.8.6.1).

F.5.3.10.1.2 Initial setup information. Initial setup information is not required for this work package.

Source: https://assist.dla.mil -- Downloaded: 2016-12-05T17:12Z
Check the source to verify that this is the current version before use.

F.5.3.10.1.3 NSN index **<nsnindx>**. Each line entry **<nsnindxrow>** shall list the complete NSN for each NSNs assigned to applicable repair part or special tool items figure number and item number **<callout>**. The NSN **<nsn>** line entry shall identify the first figure number and item number **<callout>** for which the stock number is applicable. The NSN shall not be repeated for each additional figure number and item number **<callout>** identified by that NSN.

F.5.3.10.2 Part number index work package **<pnindxwp>**. When specified by the acquiring activity, this work package shall be prepared. The index (**standard information**) shall be in ascending numeric sequence by part number. If this work package is specified, a NSN index work package **<nsnindxwp>** shall also be prepared. This index shall be listed in the format and data requirement in F.5.3.10.2.1 through F.5.3.10.2.3. Refer to MIL-HDBK-1222 for an example.

F.5.3.10.2.1 Work package identification information **<wpidinfo>**. Work package identification information is required for this work package (refer to 4.8.6.1).

F.5.3.10.2.2 Initial setup information. Initial setup information is not required for this work package.

F.5.3.10.2.3 Part number index **<pnindx>**. Each line entry **<pnindxrow>** shall list each part numbers assigned to applicable repair part or special tool items figure number and item number **<callout>**. The part number **<partno>** line entry shall identify the first figure number and item number **<callout>** for which the part number is applicable. The part number shall not be repeated for each additional figure number and item number **<callout>** identified by that part number.

F.5.3.10.3 Reference designator index work package **<refdesindxwp>**. A reference designator index work package shall be prepared as required. The index (**standard information**) shall be in alphanumeric sequence by reference designators. This index shall be listed in the format and data requirement in F.5.3.10.3.1 through F.5.3.10.3.3. See MIL-HDBK-1222 for example of reference designator index.

F.5.3.10.3.1 Work package identification information **<wpidinfo>**. Work package identification information is required for this work package (refer to 4.8.6.1).

F.5.3.10.3.2 Initial setup information. Initial setup information is not required for this work package.

F.5.3.10.3.3 Reference designator index **<refdesindx>**. Each line entry **<refdesindxrow>** shall list each reference designators assigned to applicable repair part or special tool items figure number and item number **<callout>**. The reference designator **<refdes>** line entry shall identify the first figure number and item number **<callout>** for which the reference designators is applicable. The reference designators shall not be repeated for each additional figure number and item number **<callout>** identified by that reference designator.

F.5.3.10.4 Bulk figure reference. When entries in either the NSN or part number index reference bulk material, the word “BULK” shall appear in the FIG. entry. The numbers in the ITEM No. entry shall refer to the item number list in the bulk figure located in the bulk functional group list and shall not refer to item numbers on an illustration.

F.5.3.10.5 Sets and kits. Part numbers for sets/kits shall be cross-referenced to NSN, figure, and item number for the set/kit. When Option 1 is selected, the ITEM entry shall either be left blank or list an alphabetical character (e.g.,"K" for KIT, "S" for SET, etc.). (Refer to F.5.3.5.4a.)

Source: https://assist.dla.mil -- Downloaded: 2016-12-05T17:12Z
Check the source to verify that this is the current version before use.

When Option 2 is selected, the FIG. entry shall list the word KITS or SETS, as applicable. (Refer to F.5.3.5.4b.)

F.5.3.11 Illustrations. Additional PI specific illustration requirements are described in F.5.3.11.1 through F.5.3.11.4.

F.5.3.11.1 Arrangement of illustrations. All illustrations prepared for spares, repair parts, special tools, special TMDE, and other special support equipment shall be arranged in figure number sequence. They shall precede their companion parts list (on the left-hand page preceding the parts list or at the top of the same page of the parts list). Illustrations shall not be duplicated to show different models or configurations of an assembly when UOCs can be assigned to indicate differences in configurations.

F.5.3.11.2 Use of illustrations. For clarity, multisheet illustrations may be used. References to illustrations in other TMs. or to illustrations in the narrative portion of a combined maintenance TM with a PI shall not be made.

F.5.3.11.3 Identical parts/item numbers. Identical parts (same part number) appearing in a figure (illustration) having only one FGC shall have the same item number. If a figure has two or more FGCs/assemblies, only the identical parts with identical SMR codes within each FGC/assembly shall have the same item number.

F.5.3.11.4 Identical assemblies. When two or more identical assemblies (same part number) exist in different places, i.e., in the equipment, a breakdown of the parts shall be illustrated only once, i.e., the first time the assembly appears in the PI. For subsequent times that the identical assembly appears, the assembly item name shall appear in the description and UOC entry and be followed by the statement “SEE FIG ## FOR BREAKDOWN”.

F.6 **NOTES.**

The notes in section 6 apply to this appendix.

Source: https://assist.dla.mil -- Downloaded: 2016-12-05T17:12Z
Check the source to verify that this is the current version before use.

M198 HOWITZER INTRODUCTION

SCOPE

This parts information (PI) lists and authorizes spares and repair parts; special tools; special test measurement, and diagnostic equipment (TMDE); and other special support equipment required for performance of unit maintenance of the M198 Howitzer. It authorizes the requisitioning, issue, and disposition of spares, repair parts, and special tools as indicated by the source, maintenance, and recoverability (SMR) codes.

GENERAL

In addition to the Introduction work package, this PI is divided into the following work packages.

1. Repair Parts List Work Packages Work packages containing lists of spares and repair parts authorized by this PI for use in the performance of maintenance. These work packages also include parts which must be removed for replacement of the authorized parts. Parts lists are composed of functional groups in ascending alphanumeric sequence, with the parts in each group listed in ascending figure and item number sequence. Sending units, brackets, filters, and bolts are listed with the component they mount on. Bulk materials are listed by item name in FIG. BULK at the end of the work packages. Repair parts kits are listed separately in their own functional group and work package. Repair parts for reparable special tools are also listed in a separate work package. Items listed are shown on the associated illustrations.

FIGURE F-1. Example of an introduction work package.

Source: https://assist.dla.mil -- Downloaded: 2016-12-05T17:12Z
Check the source to verify that this is the current version before use.

UH-60 HELICOPTER INTRODUCTION

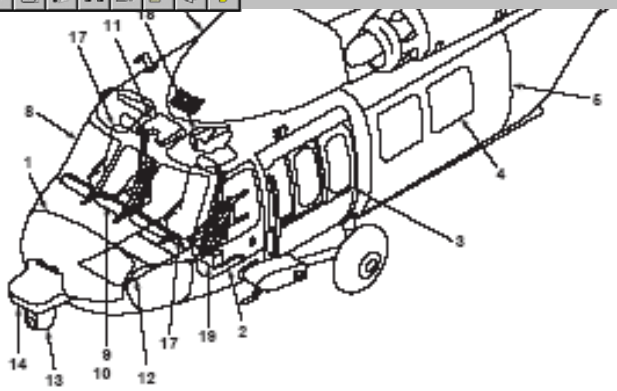

INDEX NO.	FIGURE TITLE	FIGURE NO.
1	Door Installation, Nose Section	3
2	Door Installation, Crew Nose Section	4
3	Gunners Window	12
4	Window Panel, Jettisonable, Cargo Door UH-60Q	25
5	Door Installation, Troop/Cargo	24
6	Stabilator Installation, Tail Rotor Pylon Horizontal	41
7	Stabilator Installation, Tail Rotor Pylon Horizontal	55

FIGURE F-2. Example of a repair parts list illustration.

Source: https://assist.dla.mil -- Downloaded: 2016-12-05T17:12Z
Check the source to verify that this is the current version before use.

APPENDIX G

SUPPORTING INFORMATION

G.1 **SCOPE.**

G.1.1 Scope. This appendix establishes the technical content requirements for the preparation of supporting information for major weapon systems, and their related systems, subsystems, equipment, weapons replacement assemblies (WRAs), and shop replacement assemblies (SRAs). This Appendix is a mandatory part of this standard. The information contained herein is intended for compliance. The requirements are applicable for all maintenance levels through overhaul (depot) including Depot Maintenance Work Requirements (DMWRs) and National Maintenance Work Requirements (NMWRs).

G.2 **APPLICABLE DOCUMENTS.**

The applicable documents in section 2 apply to this appendix.

G.3 **DEFINITIONS.**

The definitions in section 3 apply to this appendix.

G.4 **GENERAL REQUIREMENTS.**

G.4.1 General. Supporting information shall be prepared for weapon systems, major equipment, components and applicable support and interface equipment. Supporting information requirements are included for the preparation of technical data that supplements the specific operation and maintenance information contained in the TM. This supplemental information includes reference data, general maintenance and parts information and associated illustrations.

G.4.2 Maintenance level applicability. Requirements contained in this standard are applicable to all maintenance levels unless specifically noted in bold and in parentheses (i.e., **Field**). The labeled requirements shall be applicable to all TMs containing that maintenance level. An explanation of all applicable Department of Army maintenance levels is provided in section 3.

G.4.3 Preparation of digital data for electronic delivery. Technical manual data prepared and delivered digitally in accordance with this standard shall be Extensible Markup Language (XML) tagged using the Document Type Definition (DTD) and the XML Stylesheet Language (XSL), or style sheets in accordance with MIL-STD-2361. Refer to 4.6 for information on obtaining or accessing the DTD and style sheets. XML tags used in the modular DTD are noted throughout the text of this standard in bracketed, bold characters (i.e., **<macwp>**) as a convenience for the TM author and to ensure that the tags are used correctly when developing a document instance.

G.4.4 Use of the DTD/XSLs. The DTD referenced in this standard interpret the technical content and structure for the functional requirements contained in this appendix and are mandatory for use. Development of IETMs is accomplished through the use of this standard, the DTD, and the guidance contained in MIL-HDBK-1222. The guidance contained in MIL-HDBK-1222 applies unless they conflict with the requirements in this appendix. The requirements in this appendix take precedence over the guidance contained in MIL-HDBK-1222. A style sheet is used to interpret the style and format for screen display. For additional information on DTD and specific XSLs or style sheets, refer to MIL-STD-2361.

Source: https://assist.dla.mil -- Downloaded: 2016-12-05T17:12Z
Check the source to verify that this is the current version before use.

G.4.5 Content structure and format. The examples provided in this standard are an accurate representation of the content structure and format requirements contained in this appendix and shall be followed to permit the effective use of the DTD for Support Information.

G.4.6 Style and format. This standard provides style and format requirements for the preparation of the technical content requirements described in this appendix. These requirements are considered mandatory and are intended for compliance.

G.4.7 IETM functionality. The specific level of functionality and user interaction to be provided in the IETMs shall be in accordance with the functionality matrix contained in Appendix A.

G.4.8 Work package development. Technical manual data developed in accordance with this appendix shall be divided into individual, stand alone units of information called work packages. A work package shall consist of descriptive, operational, maintenance, troubleshooting, support, or parts information for the weapon system or equipment.

G.4.9 Selective application and tailoring. This standard contains some requirements that may not be applicable to the preparation of all technical manuals. Selective application and tailoring of requirements contained in this appendix are the responsibility of the acquiring activity and shall be accomplished using Appendix A, IETM Functionality And Data Display Requirements And Content Selection Matrixes. The applicability of some requirements is also designated by one of the following statements: unless specified otherwise by the acquiring activity; as/when specified by the acquiring activity; or when specified by the acquiring activity.

G.5 **DETAILED REQUIREMENTS.**

G.5.1 Preparation of supporting information. Supporting information shall be developed as work packages. Supporting information work packages are described in G.5.2 through G.5.10.1.

G.5.2 References work package **<refwp>**. This work package shall be prepared and list all publications referenced in the TM and required by the user to operate and/or maintain the equipment. It shall consist of a scope and publication list(s).

G.5.2.1 Work package identification information **<wpidinfo>**. This information is required for this work package (refer to 4.8.6.1).

G.5.2.2 Initial setup information. This initial setup information is not required for this work package.

G.5.2.3 Scope **<scope>**. Information concerning the use and content of the references work package shall be prepared (refer to FIGURE G-1).

G.5.2.4 Publication list **<publist>**. Individual paragraphs shall be prepared for each publication type. All related/referenced publications, with the exception of those publications that are currently unpublished, shall be listed. The list shall identify the publication by number **<name>/<extref>/<link>** and title <**title**> in alphanumeric sequence. If publication is non-government, the source shall be given and the publications shall be listed alphabetically by title (refer to FIGURE G-1). If a List of Applicable Publications (LOAP) exists, it may be referenced.

Source: https://assist.dla.mil -- Downloaded: 2016-12-05T17:12Z
Check the source to verify that this is the current version before use.

G.5.3 Maintenance allocation chart **(MAC) (Field level only)**. The MAC shall be prepared and include an intriduction work package and MAC work package.

G.5.3.1 DELETED

G.5.3.1.1 DELETED

G.5.3.1.2 DELETED

G.5.3.1.3 DELETED

G.5.3.2 DELETED

G.5.3.2.1 DELETED

G.5.3.2.2 DELETED

G.5.3.2.3 DELETED

G.5.3.3 Introduction for standard two-level maintenance MAC work package **<macintrowp>**.

G.5.3.3.1 Work package identification information **<wpidinfo>**. This information is required for this work package (refer to 4.8.6.1).

G.5.3.3.2 Initial setup information. This initial setup information is not required for this work package.

G.5.3.3.3 Introduction **<intro>**. The following text shall be prepared and included verbatim (refer to FIGURE G-4).

"MAINTENANCE ALLOCATION CHART (MAC)

INTRODUCTION

The Army Maintenance System MAC

This introduction provides a general explanation of all maintenance and repair functions authorized at the two maintenance levels under the Two-Level Maintenance System concept.

This MAC (immediately following the introduction) designates overall authority and responsibility for the performance of maintenance functions on the identified end item or component. The application of the maintenance functions to the end item or component shall be consistent with the capacities and capabilities of the designated maintenance levels, which are shown on the MAC as:

Field – includes two subcolumns, Crew (C) and Maintainer (F).

Sustainment – includes two subcolumns, Below Depot (H) and Depot (D)

Source: https://assist.dla.mil -- Downloaded: 2016-12-05T17:12Z
Check the source to verify that this is the current version before use.

The maintenance to be performed at field and sustainment levels is described as follows:

1. Crew maintenance. The responsibility of a using organization to perform maintenance on its assigned equipment. It normally consists of inspecting, servicing, lubricating, adjusting, and replacing parts, minor assemblies, and subassemblies. The replace function for this level of maintenance is indicated by the letter "C" in the third position of the SMR code. A "C" appearing in the fourth position of the SMR code indicates complete repair is possible at the crew maintenance level.

2. Maintainer maintenance. Maintenance accomplished on a component, accessory, assembly, subassembly, plug-in unit, or other portion either on the system or after it is removed. The replace function for this level of maintenance is indicated by the letter "F" appearing in the third position of the SMR code. An "F" appearing in the fourth position of the SMR code indicates complete repair is possible at the field maintenance level. Items are returned to the user after maintenance is performed at this level.

3. Below depot sustainment. Maintenance accomplished on a component, accessory, assembly, subassembly, plug-in unit, or other portion either on the system or after it is removed. The replace function for this level of maintenance is indicated by the letter "H" appearing in the third position of the SMR code. An "H" appearing in the fourth position of the SMR code indicates complete repair is possible at the below depot sustainment maintenance level. Items are returned to the supply systems after maintenance is performed at this level.

4. Depot sustainment . Maintenance accomplished on a component, accessory, assembly, subassembly, plug-in unit, or other portion either on the system or after it is removed. The replace function for this level of maintenance is indicated by the letter "D" or "K" appearing in the third position of the SMR code. Depot sustainment maintenance can be performed by either depot personnel or contractor personnel. A "D" or "K" appearing in the fourth position of the SMR code indicates complete repair is possible at the depot sustainment maintenance level. Items are returned to the supply systems after maintenance is performed at this level.

The tools and test equipment requirements table (immediately following the MAC) lists the tools and test equipment (both special tools and common tool sets) required for each maintenance function as referenced from the MAC.

The remarks table (immediately following the tools and test equipment requirements) contains supplemental instructions and explanatory notes for a particular maintenance function.

Maintenance Functions

Maintenance functions are limited to and defined as follows:

1. Inspect. To determine the serviceability of an item by comparing its physical, mechanical, and/or electrical characteristics with established standards through examination (e.g., by sight, sound, or feel). This includes scheduled inspection and gaugings and evaluation of cannon tubes.

Source: https://assist.dla.mil -- Downloaded: 2016-12-05T17:12Z
Check the source to verify that this is the current version before use.

2. Test. To verify serviceability by measuring the mechanical, pneumatic, hydraulic, or electrical characteristics of an item and comparing those characteristics with prescribed standards on a scheduled basis, i.e., load testing of lift devices and hydrostatic testing of pressure hoses.
3. Service. Operations required periodically to keep an item in proper operating condition; e.g., to clean (includes decontaminate, when required), to preserve, to drain, to paint, or to replenish fuel, lubricants, chemical fluids, or gases. This includes scheduled exercising and purging of recoil mechanisms.

   a. Unpack. To remove from packing box for service when required for the performance of maintenance operations.

   b. Repack. To return item to packing box after service and other maintenance operations.

   c. Clean. To rid the item of contamination.

   d. Touch up. To spot paint scratched or blistered surfaces.

   e. Mark. To restore obliterated identification.
4. Adjust. To maintain or regulate, within prescribed limits, by bringing into proper position, or by setting the operating characteristics to specified parameters.
5. Align. To adjust specified variable elements of an item to bring about optimum or desired performance.
6. Calibrate. To determine and cause corrections to be made or to be adjusted on instruments of test, measuring, and diagnostic equipment used in precision measurement. Consists of comparisons of two instruments, one of which is a certified standard of known accuracy, to detect and adjust any discrepancy in the accuracy of the instrument being compared.
7. Remove/Install. To remove and install the same item when required to perform service or other maintenance functions. Install may be the act of emplacing, seating, or fixing into position a spare, repair part, or module (component or assembly) in a manner to allow the proper functioning of an equipment or system.
8. Paint (ammunition only). To prepare and spray color coats of paint so that the ammunition can be identified and protected. The color indicating primary use is applied, preferably, to the entire exterior surface as the background color of the item. Other markings are to be painted as original so as to retain proper ammunition identification.
9. Replace. To remove an unserviceable item and install a serviceable counterpart in its place. “Replace” is authorized by the MAC and assigned maintenance level is shown as the third position code of the Source, Maintenance and Recoverability (SMR) code.
10. Repair. The application of maintenance services, including fault location/troubleshooting, removal/installation, disassembly/assembly procedures and maintenance actions to identify troubles and restore serviceability to an item by correcting specific damage, fault, malfunction, or failure in a part, subassembly, module (component or assembly), end item, or system.

Source: https://assist.dla.mil -- Downloaded: 2016-12-05T17:12Z
Check the source to verify that this is the current version before use.

NOTE

The following definitions are applicable to the “repair” maintenance function:

Services. Inspect, test, service, adjust, align, calibrate, and/or replace.

Fault location/troubleshooting. The process of investigating and detecting the cause of equipment malfunctioning; the act of isolating a fault within a system or Unit Under Test (UUT).

Disassembly/assembly. The step-by-step breakdown (taking apart) of a spare/functional group coded item to the level of its least component, that is assigned an SMR code for the level of maintenance under consideration (i.e., identified as maintenance significant).

Actions. Welding, grinding, riveting, straightening, facing, machining, and/or resurfacing.

11. Overhaul. That maintenance effort (service/action) prescribed to restore an item to a completely serviceable/operational condition as required by maintenance standards in appropriate technical publications. Overhaul is normally the highest degree of maintenance performed by the Army. Overhaul does not normally return an item to like new condition.
12. Rebuild. Consists of those services/actions necessary for the restoration of unserviceable equipment to a like new condition in accordance with original manufacturing standards. Rebuild is the highest degree of material maintenance applied to Army equipment. The rebuild operation includes the act of returning to zero those age measurements (e.g., hours/miles) considered in classifying Army equipment/components.

Explanation of Entries in the MAC

Group Number. Entry lists Functional Group Code (FGC) numbers, the purpose of which is to identify maintenance significant components, assemblies, subassemblies, and modules with the Next Higher Assembly (NHA).

Component/Assembly. Entry contains the item names of components, assemblies, subassemblies, and modules for which maintenance is authorized.

Maintenance Function. Entry lists the functions to be performed on the item listed in component/assembly entry. (For a detailed explanation of these functions refer to “Maintenance Functions” outlined above.)

Maintenance Level. Entry specifies each level of maintenance authorized to perform each maintenance function, by indicating work time required (expressed as manhours in whole hours or decimals) in the appropriate maintenance level. This work time figure represents the active time required to perform that maintenance function at the indicated level of maintenance. If the number or complexity of the tasks within the listed maintenance function varies at different maintenance levels, appropriate work time figures are to be shown for each level. The work time figure represents the average time required to restore an item (assembly, subassembly, component, module, end item, or system) to a serviceable condition under typical field operating conditions. This time

Source: https://assist.dla.mil -- Downloaded: 2016-12-05T17:12Z
Check the source to verify that this is the current version before use.

includes preparation time (including any necessary disassembly/assembly time), troubleshooting/fault location time, and quality assurance time in addition to the time required to perform the specific tasks identified for the maintenance functions authorized in the MAC. The symbol designations for the various maintenance levels are as follows:

Field:

C Crew maintenance

F Maintainer maintenance

Sustainment:

L Specialized Repair Activity

H Below Depot maintenance

D Depot maintenance

NOTE

The "L" maintenance level is not included in maintenance level entry of the MAC. Functions to this level of maintenance are identified by a work time figure in the "H" (Below Depot Sustainment entry) of the maintenance level, and an associated reference code is used in the REMARKS code entry. This code is keyed to the remarks and the SRA complete repair application is explained there.

Tools and Equipment Reference Code. Entry specifies, by code, those common tool sets (not individual tools), common Test, Measurement and Diagnostic Equipment (TMDE), and special tools, special TMDE and special support equipment required to perform the designated function. Codes are keyed to the entries in the tools and test equipment table.

Remarks Code. When applicable, this entry contains a letter code, in alphabetical order, which is keyed to the remarks table entries.

Explanation of Entries in the Tools and Test Equipment Requirements

Tool or Test Equipment Reference Code. The tool or test equipment reference code correlates with a code used in tasks and equipment reference code entry of the MAC.

Maintenance Level. The lowest level of maintenance authorized to use the tool or test equipment.

Nomenclature. Name or identification of the tool or test equipment.

National Stock Number (NSN). The NSN of the tool or test equipment.

Tool Number. The manufacturer's part number.

Explanation of Entries in the Remarks

Remarks Code. The code recorded in remarks code entry of the MAC.

Remarks. This entry lists information pertinent to the maintenance function being performed as indicated in the MAC."

Source: https://assist.dla.mil -- Downloaded: 2016-12-05T17:12Z
Check the source to verify that this is the current version before use.

G.5.3.3A Introduction for aviation two-level maintenance MAC work package <**macintrow**p>.

G.5.3.3A.1 Work package identification information <**wpidinfo**>. This information is required for this work package (refer to 4.8.6.1).

G.5.3.3A.2 Initial setup information. This initial setup information is not required for this work package.

G.5.3.3A.3 Introduction <**intro**>. The following text shall be prepared and included verbatim (refer to FIGURE G-4A).

" **MAINTENANCE ALLOCATION CHART (MAC)**

INTRODUCTION

Aviation Maintenance Allocation Chart

The MAC (immediately following the introduction) designates overall authority and responsibility for the performance of maintenance functions on the identified end item or component. The application of the maintenance functions to the end item or component shall be consistent with the capacities and capabilities of the designated maintenance level which are shown on the MAC as:

Field - includes two columns, "O" which corresponds to Aviation Maintenance Company (AMC) and "F" which corresponds to Aviation Support Battalion (ASB)

Sustainment - includes two columns, "L" which corresponds to Theater Aviation Sustainment Maintenance Group (TASMG) and other organizations that have National Maintenance Program certification and "D" which corresponds to Depot .

The maintenance to be performed below depot and in the field is described as follows:

1. **Aviation Maintenance Company (AMC)**. The primary purpose of the aviation maintenance company is to support the momentum of offensive operations. Composition of the AMC will be based on type of operations being supported, nature of the battlefield, and the need for flexibility. AMCs will provide forward positioning of essential maintenance repair parts and supplies, maximum use of support teams, use of airlift/air drops for resupply, for maintenance that does not interfere with the tactical plans and operations. AMCs are agile, mobile, and well equipped. They will carry limited stockpiles of demand supported, essential parts and supplies. The AMC performs battle damage assessment and repair (BDAR) and unit level repairs on Aviation Life Support Systems (ALSS). The AMC performs production control, quality control, and Maintenance Management/Maintenance Test Pilot functions. AMCs will rig aircraft for recovery operations. The AMC manages the battalion maintenance program and operates a central tool room. The AMC conducts forward arming and refueling. AMCs will be comprised of 3 to 4 modular platoons, which are configured to maintain unit level operational readiness and aircraft availability:

Source: https://assist.dla.mil -- Downloaded: 2016-12-05T17:12Z
Check the source to verify that this is the current version before use.

Headquarters Platoon - Establishes standard operating procedures, receives and processes work requests, schedules maintenance, maintains status of aircraft, coordinates inspections and test flights and return of repaired aircraft, enforces quality standards, responsible for safety. Also, obtains, stores, and issues Classes II, III, IV, and IX, prescribe load list, shop stock and authorized stockage list items.

Airframe Repair Platoon - Tailored to battalion it supports. Performs scheduled and unscheduled maintenance, troubleshoots faulty components, and removes and replaces aircraft components. Provides mission capable aircraft to support flight company operations.

Component Repair Platoon - Performs scheduled and unscheduled maintenance, troubleshoots faulty components, and removes and replaces aircraft components. Performs BDAR and manages Class IX spare/shop stock. This platoon uses Shop Equipment Contact Maintenance (SECM) trucks which are multi-capable and self-contained and are used to perform on-site maintenance using enhanced power tools, test, measurement, and diagnostic equipment, welding and cutting equipment, and an air compressor. The SECM truck is highly mobile.

Armament platoon - Only used in attack battalions and cavalry squadrons. Performs scheduled and unscheduled maintenance on armament components.

2. **Aviation Support Company (ASC) in the Aviation Support Battalion (ASB).** Comprised of Headquarters, Airframe, and Component Repair Platoons. Provides maintenance assistance to aviation units helping them maintain operational readiness and aircraft availability. Utilizes SECM trucks. Capable of supporting split based operations in two separate and distinct locations. Performs the following types of maintenance:

a. Intermediate maintenance and logistics support operations.

b. Maintenance actions which require more than 3 days to correct.

c. Phased maintenance and preventive maintenance services.

d. In-depth troubleshooting and diagnosis of airframe and component malfunctions.

e. Repairs airframes and LRU component.

f. Fixes night vision systems, aviation life support systems, aviation electrical and hydraulic components.

g. Limited capability to fabricate hydraulic lines.

h. Repairs engines, prop and rotors, armament, and armament subsystems.

i. Fixes and fuels organic battalion equipment, ground aviation vehicles, and aviation ground support equipment.

j. Operates and performs field maintenance on aviation ground power units, generator, and ground support equipment.

k. Battle damage assessment and repair (BDAR).

l. Production control and quality control.

m. Test Pilot functions.

Source: https://assist.dla.mil -- Downloaded: 2016-12-05T17:12Z
Check the source to verify that this is the current version before use.

3. **Theater Aviation Sustainment Maintenance Group (TASMG) -** Assists in deployment and redeployment, provides technical assistance, supports increased operational tempo, sustains Army aviation across the entire spectrum of operations. The TASMG:

   a. Provides support to CONUS deploying forces

   b. Provides support to OCUNUS deployed forces

   c. OCONUS aviation maintenance support for contingency and stability and/or support operations.

   d. Expands aviation maintenance capabilities of CONUS depots

   e. Classifies and inspects aviation stocks and components.

   f. Repairs engines, airframes, armament, composite materials, electrical systems, avionics, hydraulics.

   g. Fabricates hydraulics lines.

   h. Backup ASB and AMC maintenance functions.

Use of the MAC

NOTE

Approved item names are used throughout this MAC. Generic terms/ nomenclature (if any) are expressed in parentheses and are not to be considered as official terminology.

This MAC assigns maintenance functions to the lowest level of maintenance, based on past experience and the following considerations:

Skills available.

Work time required.

Tools and test equipment required and/or available.

Only the lowest level of maintenance authorized to perform a maintenance function is indicated. If the lowest maintenance level cannot perform all tasks of any single maintenance function (e.g., test, repair), then the higher maintenance level(s) that can accomplish additional tasks will also be indicated.

A maintenance function assigned to a maintenance level will automatically be authorized to be performed at any higher maintenance level.

A maintenance function that cannot be performed at the assigned level of maintenance for any reason may be evacuated to the next higher maintenance level. Higher maintenance levels will perform the maintenance functions of lower maintenance levels when required by the commander who has the authority to direct such tasking.

The assignment of a maintenance function will not be construed as authorization to carry the related repair parts or spares in stock. Information to requisition or otherwise secure the necessary repair parts will be as specified in the associated PI.

Normally there will be no deviation from the assigned level of maintenance. In cases of operational necessity, at the request of a lower maintenance level and on a one-time basis, transfer of maintenance functions to the lower level may be accomplished by specific authorization of the maintenance officer of the higher level of maintenance to

Source: https://assist.dla.mil -- Downloaded: 2016-12-05T17:12Z
Check the source to verify that this is the current version before use.

which the function is assigned. The special tools, equipment, etc., required by the lower level of maintenance to perform this function will be furnished by the maintenance level to which the function is assigned. This transfer of a maintenance function to a lower maintenance level does not relieve the higher maintenance level of the responsibility for the function. The higher level of maintenance will provide technical supervision and inspection of the function being performed at the lower level.

Maintenance Functions

Maintenance functions will be limited to and defined as follows:

1. Inspect. To determine the serviceability of an item by comparing its physical, mechanical, and/or electrical characteristics with established standards through examination (e.g., by sight, sound, or feel).
2. Test. To verify serviceability by measuring the mechanical, pneumatic, hydraulic, or electrical characteristics of an item and comparing those characteristics with prescribed standards.
3. Service. Operations required periodically to keep an item in proper operating condition, i.e., to clean (includes decontaminate, when required), to preserve, to drain, to paint, or to replenish fuel, lubricants, chemical fluids, or gases.
   a. Unpack. To remove from packing box for service when required for the performance of maintenance operations.
   b. Repack. To return item to packing box after service and other maintenance operations.
   c. Clean. To rid the item of contamination.
   d. Touch up. To spot paint scratched or blistered surfaces.
   e. Mark. To restore obliterated identification.
4. Adjust. To maintain or regulate, within prescribed limits, by bringing into proper or exact position, or by setting the operating characteristics to specified parameters.
5. Align. To adjust specified variable elements of an item to bring about optimum or desired performance.
6. Calibrate. To determine and cause corrections to be made or to be adjusted on instruments of test, measuring, and diagnostic equipment used in precision measurement. Consists of comparisons of two instruments, one of which is a certified standard of known accuracy, to detect and adjust any discrepancy in the accuracy of the instrument being compared.
7. Remove/Install. To remove and install the same item when required to perform service or other maintenance functions. Install may be the act of emplacing, seating, or fixing into position a spare, repair part, or module (component or assembly) in a manner to allow the proper functioning of an equipment or system.
8. Paint (ammunition only). To prepare and spray color coats of paint so that the ammunition can be identified and protected. The color indicating primary use is applied, preferably, to the entire exterior surface as the background color of the

Source: https://assist.dla.mil -- Downloaded: 2016-12-05T17:12Z
Check the source to verify that this is the current version before use.

item. Other markings are to be painted as original so as to retain proper ammunition identification.

9. Replace. To remove an unserviceable item and install a serviceable counterpart in its place. "Replace" is authorized by the MAC and assigned maintenance level is shown as the third position code of the Source, Maintenance, and Recoverability (SMR) code.

10. Repair. The application of maintenance services, including fault location/troubleshooting, removal/installation, disassembly/assembly procedures, and maintenance actions to identify troubles and restore serviceability to an item by correcting specific damage, fault, malfunction, or failure in a part, subassembly, module (component or assembly), end item, or system.

NOTE

The following definitions are applicable to the "repair" maintenance function:

Services. Inspect, test, service, adjust, align, calibrate, and/or replace.

Fault location/troubleshooting. The process of investigating and detecting the cause of equipment malfunctioning; the act of isolating a fault within a system or Unit Under Test (UUT).

Disassembly/assembly. The step-by-step taking apart (or breakdown) of a spare/functional group coded item to the level of its least component identified as maintenance significant (i.e., assigned an SMR code) for the level of maintenance under consideration.

Actions. Welding, grinding, riveting, straightening, facing, machining, and/or resurfacing.

11. Overhaul. That maintenance effort (service/action) prescribed to restore an item to a completely serviceable/operational condition as required by maintenance standards in appropriate technical publications. Overhaul is normally the highest degree of maintenance performed by the Army. Overhaul does not normally return an item to like new condition.

12. Rebuild. Those services/actions necessary for the restoration of unserviceable equipment to a like new condition in accordance with original manufacturing standards. Rebuild is the highest degree of materiel maintenance applied to Army equipment. The rebuild operation includes the act of returning to zero those age measurements (e.g., hours/miles) considered in classifying Army equipment/components.

Explanation of Entries in the MAC

Group Number and Component/Assembly. The functional groupings in the sample below identify maintenance significant components, assemblies, subassemblies, and modules with the next higher assembly.

Source: https://assist.dla.mil -- Downloaded: 2016-12-05T17:12Z
Check the source to verify that this is the current version before use.

Group Number	Component/Assembly Description
04	POWER PLANT
0401	ENGINE, GENERAL Servicing, handling inspection requirements, overhaul and retirement schedules. External lines and hoses. (As applicable.)
0402	COMPRESSOR SECTION (COLD SECTION MODULE) Rotor, blades, vanes, impeller, stators, inlet guide vanes, mainframe, particle separator, bleed valve, bearings, seals, external lines and hoses.
0403	COMBUSTION SECTION (HOT SECTION MODULE) Liners, nozzles, stators, rotor, seals, couplings, blades.
0404	POWER-TURBINE (POWER TURBINE MODULE) Nozzles, rotors, blades, exit guide vanes, exhaust frame, drive shaft, bearings, seals, external lines and hoses.
0405	ACCESSORY GEAR BOX (ACCESORY SECTION MODULE) Input and output gears, seals, chip detector, housings, drive shaft, bearings.
0406	FUEL SYSTEM Fuel control, fuel boost pump, governors, fuel filter assembly, sequence valve, fuel manifold, fuel nozzle, external lines and hoses.
0407	ELECTRICAL SYSTEM Electrical control units, exciters, thermocouples, ignition harness, electrical cables, history record, torque over speed sensor, Np sensor, external lines and hoses.
0408	OIL SYSTEM Tanks, oil filter, oil cooler, lube and scavenger pumps, oil filter bypass sensor, external lines and hoses.

Maintenance Function. Entry lists the functions to be performed on the items listed in Component/Assembly.

Maintenance Level. The maintenance levels field and sustainment are listed on the MAC with individual columns for AMC, ASB, TASMG, and Depot that include the work times for maintenance functions at each maintenance level. Work time presentations such as "0.1" indicate the average time (expressed in manhours in whole hours or decimals) it requires a maintenance level to perform a specified maintenance function. If a work time has not been established, the columnar presentation will indicate "--". Maintenance levels higher than the level of maintenance indicated are authorized to perform the indicated function.

Tools and Equipment Reference Code. Entry specifies, by code, those common tool sets (not individual tools), common TMDE, and special tools, special TMDE, and special support equipment required to perform the designated function.

Remarks Code. When applicable, this column contains a letter code, in alphabetical order, which is keyed to the remarks.

Source: https://assist.dla.mil -- Downloaded: 2016-12-05T17:12Z
Check the source to verify that this is the current version before use.

Explanation of Entries in the Tools and Test Equipment Requirements

Tool or Test Equipment Reference Code. The tool or test equipment reference code correlates with a code used in tasks and equipment reference code entry of the MAC.

Maintenance Level. The lowest level of maintenance authorized to use the tool or test equipment.

Nomenclature. Name or identification of the tool or test equipment.

National Stock Number (NSN). The NSN of the tool or test equipment.

Tool Number. The manufacturer's part number.

Explanation of Entries in the Remarks

Remarks Code. The code recorded in remarks code entry of the MAC.

Remarks. This entry lists information pertinent to the maintenance function being performed as indicated in the MAC"

G.5.3.4 MAC work package **<macwp>**. This work package shall be prepared in Functional Group Code (FGC) sequence to consolidate and identify those groups on the list which involve identified maintenance functions. The MAC shall be prepared according to the approved source data provided by the acquiring activity.

G.5.3.4.1 Work package identification information **<wpidinfo>**. Work package identification information is required for this work package (refer to 4.8.6.1).

G.5.3.4.2 Initial setup information. Initial setup information is not required for this work package.

G.5.3.4.3 MAC entries.

a. The basic entries in the MAC shall be a list of functional groups applicable to the end item which require maintenance. The term functional group applies to reparable assemblies and subassemblies, i.e., spares (any reparable component required for the maintenance or repair of an end item), but not to repair parts (any consumable, non-reparable component required for the maintenance or repair of an end item). The end item group shall be numbered "00," or its equivalent "AA."
b. Entries shall be item names (a basic name and a noun word or phrase modifier, e.g., transformer, pulse, low power) and, where applicable, type designators, without stock or part numbers (P/Ns) if possible, in order to minimize need for subsequent change; however, entries shall contain positive identification. Parts that are not subject to maintenance shall not be listed in the MAC.
c. All item names of MAC functional groups shall be official nomenclature in accordance with the PI nomenclature or other source as specified by the acquiring activity. Reverse word order shall be used in the MAC.
d. The maintenance code entered in the third position of the Source, Maintenance, and Recoverability (SMR) code in the PI shall be used to identify the lowest category of maintenance that is authorized to remove, replace, and use the spare or repair parts. SMR codes are further defined in Appendix F, Parts Information (PI).

Source: https://assist.dla.mil -- Downloaded: 2016-12-05T17:12Z
Check the source to verify that this is the current version before use.

e. If the maintenance function is a replace function only for a repair part, the repair part shall not be listed in the MAC, unless not listing the repair part would result in omission of the Next Higher Assembly (NHA) group number; in this case, the part shall be listed in order to list the NHA functional group number.

f. All items in the MAC shall specify the maintenance level(s) to which a function is authorized.

g. Exception is authorized to ammunition MACs to permit use of maintenance function headings that better describe or identify ammunition peculiar maintenance functions. The headings used and their definitions shall be included in the appropriate ammunition TM(s).

G.5.3.4.4 MAC. The standard two-level MAC **<mac>** (standard information), and aviation two-level MAC (standard information) shall be prepared as follows: (refer to MIL-HDBK-1222 for examples of MAC standard information).

a. For an explanation of data to be listed in entries of the MAC, refer to the introduction information presented in G.5.3.3 or G.5.3.3A as applicable.

b. The group number entry **<groupno>** shall be entered, the nomenclature of the spare (component/assembly) **<compassem>** shall be entered, and the maintenance function **<maintfunc>** shall be listed in the MAC.

c. The maintenance level entry shall be as follows:

(1) The standard two-level MAC maintenance level column shall be divided into two main headings, one for field and one for sustainment. Beneath the main headings there shall be four subheadings **<maintclass>.** Crew **<crew>** and maintainer **<direct>** shall be under field and below depot sustainment **<gensup>** and depot **<depot>** shall be under sustainment.

(2) The aviation two-level MAC maintenance level column shall be divided into two main headings, one for field and one for sustainment. Beneath the main headings there shall be four subheadings <av**maintclass-2lvl>.** Aviation maintenance company <**amc**> and aviation support battalion <**asb**> shall be under field and theater aviation sustainment maintenance group <**tasmg**> and depot <**depot>** shall be under sustainment.

d. A work time figure must appear in the entry for the maintenance level authorized to perform the maintenance listed in the maintenance function.

e. Reference numbers for all required tools and test equipment **<terefs>** shall be listed in the Tools and Equipment Reference Code entry of the MAC. These reference numbers shall correspond to the appropriate tools/test equipment listed in the tools and test equipment table.

f. Reference letters for applicable remarks **<remarkrefs>** shall be listed in the Remarks Code entry of the MAC. These reference letters shall correspond to the appropriate remarks listed in the remarks table.

Source: https://assist.dla.mil -- Downloaded: 2016-12-05T17:12Z
Check the source to verify that this is the current version before use.

G.5.3.5 Tools and test equipment requirements **<tereqtab>**. The list (**standard information**) of all tools and test equipment, both special and common, required to maintain the equipment shall be prepared, as applicable. Common tools shall not be included on this list when they are part of an existing set, kit, or outfit authorized to the intended user; however, the authorized set, kit, or outfit which contains the prescribed common tools shall be listed (refer to MIL-HDBK-1222 for example of tools and test equipment standard information).

G.5.3.6 Remarks **<remarktab>**. Remarks (**standard information**) pertinent to maintenance functions shall be prepared as applicable (refer to MIL-HDBK-1222 for example of remarks standard information).

G.5.4 Components of end item **(COEI) and basic issue items (BII) lists work package (operator only) <coeibiiwp>**. This work package shall be prepared as an inventory for the equipment to ensure safe and efficient operation. The format of the COEI and BII shall be based on the number of items and usability. When there are only a few items the illustrations shall be placed above the tabular listing (Method A). When there are numerous items the illustrations may be included within the tabular listing for better usability (Method B). The data described in G.5.4.1 through G.5.4.5 shall be prepared (refer to MIL-HDBK-1222 or example of COEI and BII **standard information**).

G.5.4.1 Work package identification information **<wpidinfo>**. Work package identification information is required for this work package (refer to 4.8.6.1).

G.5.4.2 Initial setup information. Initial setup information is not required for this work package.

G.5.4.3 Introduction for COEI and BII lists work package **<intro>**. The following introduction shall be prepared and included verbatim (refer also to FIGURE G-5).

"**COMPONENTS OF END ITEM (COEI) AND BASIC ISSUE ITEMS (BII) LISTS**

INTRODUCTION

Scope

This work package lists COEI and BII for the (*insert the short end item name*) to help you inventory items for safe and efficient operation of the equipment.

General

The COEI and BII information is divided into the following lists:

Components of End Item (COEI). This list is for information purposes only and is not authority to requisition replacements. These items are part of the (*enter name of end item*). As part of the end item, these items must be with the end item whenever it is issued or transferred between property accounts. Items of COEI are removed and separately packaged for transportation or shipment only when necessary. Illustrations are furnished to help you find and identify the items.

Source: https://assist.dla.mil -- Downloaded: 2016-12-05T17:12Z
Check the source to verify that this is the current version before use.

Basic Issue Items (BII). These essential items are required to place the (*enter name of end item*) in operation, operate it, and to do emergency repairs. Although shipped separately packaged, BII must be with the (*enter name of end item*) during operation and when it is transferred between property accounts. Listing these items is your authority to request/requisition them for replacement based on authorization of the end item by the TOE/MTOE. Illustrations are furnished to help you find and identify the items.

Explanation of Entries in the COEI List and BII List

Select method A text.

"Illus Number. Gives you the number of the item illustrated.

National Stock Number (NSN). Identifies the stock number of the item to be used for requisitioning purposes.

Description, Part Number/(CAGEC). Identifies the Federal item name (in all capital letters) followed by a minimum description when needed. The stowage location of COEI and BII is also included in this entry. The last line below the description is the CAGEC (Commercial and Government Entity Code) (in parentheses) and the part number.

Usable On Code. When applicable, gives you a code if the item you need is not the same for different models of equipment. (*Add the following only as applicable. Replace Xs with appropriate codes and model numbers.*) These codes are identified below:

Code	**Used on**
XXX	*Model XXX*
XXX	*Model XXXX*
XXX	*Model XXXXX*

U/I. Unit of Issue (U/I) indicates the physical measurement or count of the item as issued per the National Stock Number entry.

Qty Rqr. Indicates the quantity required."

OR

Select method B text.

"Item Number. Gives you the reference number of the item listed.

National Stock Number and Illustration. Identifies the stock number of the item to be used for requisitioning purposes and provides an illustration of the item.

Description, Part Number/(CAGEC). Identifies the Federal item name (in all capital letters) followed by a minimum description when needed. The stowage location of COEI and BII is also included in this entry. The last line below the description is the CAGEC (Commercial and Government Entity Code) (in parentheses) and the part number.

Source: https://assist.dla.mil -- Downloaded: 2016-12-05T17:12Z
Check the source to verify that this is the current version before use.

Usable On Code. When applicable, gives you a code if the item you need is not the same for different models of equipment. (*Add the following only as applicable. Replace Xs with appropriate codes and model numbers.*) These codes are identified below:

Code	**Used on**
XXX	*Model XXX*
XXX	*Model XXXX*
XXX	*Model XXXXX*

U/I. Unit of Issue (U/I) indicates the physical measurement or count of the item as issued per the National Stock Number entry.

Qty Rqr. Indicates the quantity required."

G.5.4.4 COEI list **<coei>**. This list shall be prepared as an illustrated list of components of the end item (spare/repair parts that are removed from the major end item and separately packaged or stowed for transportation or movement; includes on-board spares). The illustrations shall be placed above the list (Method A) or within the list (Method B). Refer to MIL-HDBK-1222 for an example arrangement for the COEI illustrations and list for Method A and Method B.

G.5.4.4.1 List **<coeitab>**. The COEI list (**standard information**) shall include the following information and basic content applicable to the specific equipment. The description of each item shall consist of the approved Federal item name **<desc>**, followed by a short description when needed. Items shall be listed alphabetically. The part number **<partno>** shall be located below the item. The Commercial and Government Entity Code (CAGEC) **<cageno>** shall follow the part number and in parentheses. The stowage location of COEI shall also be included with the description. When more than one model or configuration is applicable and Usable On Codes (UOC) **<uoc>** are assigned, the UOC shall appear in a separate entry adjacent to the description entry. When on-board spares <**on-board-spares**>apply, there shall be a break in the text of the list and a new heading ON-BOARD SPARES shall be used. A list of the on-board spares shall appear in the same format as required for the basic COEI list. Refer to MIL-HDBK-1222 for example of standard information for COEI list.

G.5.4.5 BII list **<bii>**. This tabular list (**standard information**) shall be prepared in the same format and include similar content (tailored to the applicable BII) as required for the COEI list. The stowage location of BII shall also be included with the description entry (refer to G.5.4.1). As noted in AR 25-30 "Ensure that equipment publications for operators are listed in the basic issue items list."

G.5.5 AAL work package **(operator only) <aalwp>**. This work package shall be prepared as directed by acquiring activity and shall list all AAL items (i.e., items not issued with the end item; not listed on the end item engineering drawing as part of the end item, National Stock Number (NSN) configuration; not required to be turned in with the end item; separately authorized by MTOE, TDA, CTA, or JTA; and provided for information only). The data described in G.5.5.1 and G.5.5.4 shall be prepared.

G.5.5.1 Work package identification information **<wpidinfo>**. Work package identification information is required for this work package (refer to 4.8.6.1).

G.5.5.2 Initial setup information. Initial setup information is not required for this work package.

Source: https://assist.dla.mil -- Downloaded: 2016-12-05T17:12Z
Check the source to verify that this is the current version before use.

G.5.5.3 Introduction **<intro>**. The following introduction (text below within the quotation marks) shall be prepared and included verbatim (refer also to FIGURE G-6).

"**ADDITIONAL AUTHORIZATION LIST (AAL)**

INTRODUCTION

Scope

This work package lists additional items you are authorized for the support of the (*enter short item name*).

General

This list identifies items that do not have to accompany the (*enter short item name*) and that do not have to be turned in with it. These items are all authorized to you by CTA, MTOE, TDA, or JTA.

Explanation of Entries in the AAL

National Stock Number (NSN). Identifies the stock number of the item to be used for requisitioning purposes.

Description, Part Number/(CAGEC). Identifies the Federal item name (in all capital letters) followed by a minimum description when needed. The last line below the description is the part number and the Commercial and Government Entity Code (CAGEC) (in parentheses).

Usable On Code. When applicable, gives you a code if the item you need is not the same for different models of equipment. (*Add the following only as applicable. Replace Xs with appropriate codes and model numbers.*) These codes are identified below:

Code	**Used on**
XXX	*Model XXX*
XXX	*Model XXXX*
XXX	*Model XXXXX*

U/I. Unit of Issue (U/I) indicates the physical measurement or count of the item as issued per the National Stock Number.

Qty Recm. Indicates the quantity recommended."

G.5.5.4 AAL list **<aal>**. A tabular list (**standard information**) of all additional authorized items shall be prepared. The entries and subsequent information for this list shall be the same as the COEI and BII lists except the ILLUS NUMBER entry required for the COEI and BII lists shall not apply since there are no illustrations used, and the QTY entry shall be QTY RECM (quantity recommended). The items shall be listed alphabetically. Refer to MIL-HDBK-1222 for examples of standard information for AAL list.

G.5.6 Expendable and durable items list work package **<explistwp>**. This work package shall be prepared to provide the TM user a list of all expendable and durable items called out in the TM text which are necessary to operate and/or maintain the equipment. The following data described in G.5.6.1 through G.5.6.4 shall be included.

Source: https://assist.dla.mil -- Downloaded: 2016-12-05T17:12Z
Check the source to verify that this is the current version before use.

G.5.6.1 Work package identification information **<wpidinfo>**. Work package identification information is required for this work package (refer to 4.8.6.1).

G.5.6.2 Initial setup information. Initial setup information is not required for this work package.

G.5.6.3 Introduction for expendable and durable items list work package **<intro>**. The following introduction (text below within the quotation marks) shall be prepared and included verbatim (refer also to FIGURE G-7).

"**EXPENDABLE AND DURABLE ITEMS LIST**

INTRODUCTION

Scope

This work package lists expendable and durable items that you will need to operate and maintain the (*enter equipment/end item name*). This list is for information only and is not authority to requisition the listed items. These items are authorized to you by CTA 50-970, Expendable/Durable Items (Except Medical, Class V Repair Parts, and Heraldic Items), CTA 50-909, Field and Garrison Furnishings and Equipment or CTA 8-100, Army Medical Department Expendable/Durable Items.

Explanation of Entries in the Expendable/Durable Items List

Item No. This number is assigned to the entry in the list and is referenced in the narrative instructions to identify the item (e.g., Use brake fluid (Expendable/Durable Items List).).

Level. This entry identifies the lowest level of maintenance that requires the listed item (*include as applicable: C = Operator/Crew, O = AMC, F = Maintainer or ASB, H = Below Depot Sustainment or TASMG, D = Depot*).

National Stock Number (NSN). This is the NSN assigned to the item which you can use to requisition it.

Item Name, Description, Part Number/(CAGEC). This column provides the other information you need to identify the item. The last line below the description is the part number and the Commercial and Government Entity Code (CAGEC) (in parentheses).

U/I. Unit of Issue (U/I) code shows the physical measurement or count of an item, such as gallon, dozen, gross, etc."

G.5.6.4 Expendable and durable items list **<explist>**. This list (**standard information**) shall be prepared and include the following information:

a. Item number
b. Lowest maintenance level
c. National Stock Number (NSN)
d. Item name or nomenclature
e. If applicable a description
f. Part number
g. Commercial and Government Entity Code (CAGEC)
h. Unit of Issue (U/I)

Source: https://assist.dla.mil -- Downloaded: 2016-12-05T17:12Z
Check the source to verify that this is the current version before use.

No illustrations shall be prepared for these items. Items appearing in the tabular list shall appear in alphabetical sequence by item name. Items to be listed shall be those approved by the acquiring activity (refer to MIL-HDBK-1222 for expendable and durable items standard information).

G.5.7 Tool identification list work package **(Field level or above only) <toolidwp>**. This work package shall be prepared as directed by acquiring active and shall include a list of the tools authorized to the levels of maintenance covered in the narrative portion of the TM and as referenced by the initial setups. For **DMWRs/NMWRs** a list of all special tools and test, measurement, and diagnostic equipment not contained in lower level technical manuals or in the parts information and required to perform the procedures in the DMWR/NMWR, shall be included. This list shall include any special inspection equipment used only for the item that the DMWR/NMWR covers. The following data described in G.5.7.1 through G.5.7.4 shall be included.

G.5.7.1 Work package identification information **<wpidinfo>**. Work package identification information is required for this work package (refer to 4.8.6.1).

G.5.7.2 Initial setup information. Initial setup information is not required for this work package.

G.5.7.3 Introduction for tool identification list work package **<intro>**. The following introduction (text below within the quotation marks) shall be prepared and included verbatim (refer also to FIGURE G-8).

"**TOOL IDENTIFICATION LIST**
INTRODUCTION

Scope

This work package lists all common tools and supplements and special tools/fixtures needed to maintain the (*insert equipment name*)."

OR

"This work package lists special tools and equipment needed to maintain the (*insert equipment name*)." *(DMWRs/NMWRs only)*

"**Explanation of Entries in the Tool Identification List**

Item No. This number is assigned to the entry in the list and is referenced in the initial setup to identify the item (e.g., Extractor (Tool Identification List, item 32)).

Item Name. This column lists the item by noun nomenclature and other descriptive features (e.g., Gage, belt tension).

National Stock Number(NSN). This is the National Stock Number (NSN) assigned to the item; use it to requisition the item.

Source: https://assist.dla.mil -- Downloaded: 2016-12-05T17:12Z
Check the source to verify that this is the current version before use.

Part Number/(CAGEC). Indicates the primary number used by the manufacturer (individual, company, firm, corporation, or Government activity) which controls the design and characteristics of the item by means of its engineering drawings, specifications, standards, and inspection requirements to identify an item or range of items. The manufacturer's Commercial and Government Entity Code (CAGEC) is also included.

Reference. This column identifies the authorizing supply catalog or parts information for items listed in this work package." **(Not required for DMWRs/NMWRs)**

G.5.7.4 Tool identification list **<toolidlist>**. Applicable information for this list (**standard information**) shall be prepared and include the following information:

a. Item number
b. Item name or nomenclature
c. National Stock Number (NSN)
d. Part Number
e. Commercial and Government Entity Code (CAGEC)
f. Reference

Item names shall be in alphabetical order. A lead-in paragraph to the tool identification list may be included (refer to MIL-HDBK-1222 for tool identification standard information).

G.5.8 Mandatory replacement parts work package **(Field level or above only) <mrplwp>**. This work package shall be prepared as directed by acquiring activity and shall list all mandatory replacement parts referenced in the task initial setups and procedures. For **DMWRs/NMWRs** a mandatory replacement parts list, consisting of all items that must be replaced during the repair and overhaul of the equipment, whether or not they have been disturbed or not shall be developed. When an item or component is not disassembled based on preshop analysis (PSA), the item will not be disassembled for the sole purpose to add a mandatory part. All items that must be replaced during overhaul or repair procedures (based on usage intervals such as miles, time, or rounds fired, or replaced on a time between overhaul (TBO) interval) shall be included in the parts list table. A reference shall be made to the TM that covers the equipment. The following data described in G.5.8.1 through G.5.8.4 shall be included.

G.5.8.1 Work package identification information **<wpidinfo>**. Work package identification information is required for this work package (refer to 4.8.6.1).

G.5.8.2 Initial setup information. Initial setup information is not required for this work package.

G.5.8.3 Introduction for mandatory replacement parts work package **<intro>**. This work package shall include an introduction.

G.5.8.4 Mandatory replacement parts list **<mprl>**. This work package shall include a tabular list **<mrpl>** (**standard information**) of mandatory replacement parts. Mandatory replacement parts shall be listed (standard column headings in quotes) by item number **<itemno>** "Item No.", part number **<partno>** and Commercial and Government Entity Code (CAGEC) **<cageno>** (CAGEC) "Part Number/(CAGEC)", National Stock Number (NSN) **<nsn>** **"**National Stock Number (NSN)", nomenclature **<name>** "Nomenclature", and quantity **<qty>** "Qty". Items shall be listed in alphanumeric order by part number (refer to MIL-HDBK-1222 for mandatory replacement parts standard information).

Source: https://assist.dla.mil -- Downloaded: 2016-12-05T17:12Z
Check the source to verify that this is the current version before use.

G.5.9 Critical safety items (CSI) and flight safety critical aircraft parts (FSCAP) work package **<csi.fscap.wp>**. When specified by acquiring activity this work package shall be developed. The following data described in G.5.9.1 through G.5.9.4 shall be included in the work package.

G.5.9.1 Work package identification information **<wpidinfo>**. Work package identification information is required for this work package (refer to 4.8.6.1).

G.5.9.2 Initial setup information. Initial setup information is not required for this work package.

G.5.9.3 Critical safety items (CSI) **<csi>**. As applicable, this work package shall include a tabular listing provided by the acquiring activity. Each CSI and associated characteristic(s) shall be clearly identified within overhaul/repair procedures. The location of the critical safety procedures or processes within the **depot maintenance** work packages shall be referenced.

G.5.9.4 Flight safety critical aircraft parts **(FSCAP) (aviation only) <fscap>**. For **aircraft**, Flight Safety Critical Aircraft Parts (FSCAP) and installations identified under the FSCAP program shall require special handling during overhaul. A critical characteristic is any feature throughout the life cycle of a FSCAP, such as dimension, tolerance, finish, material or assembly, manufacturing process, inspection process, operation, field maintenance requirement, depot overhaul requirement, or other feature that if nonconforming, missing, or degraded, could cause failure or malfunction of a FSCAP. FSCAPs shall be listed (standard column headings in quotes) by their nomenclature **<name>** “Nomenclature”, part number **<partno>** and Commercial and Government Entity Code CAGEC) **<cageno>** “Part Number/(CAGEC)”, and critical characteristic **<desc>** “Critical Characteristic” (refer to MIL-HDBK-1222 for FSCAP standard information). Throughout the work package, warnings shall be included emphasizing critical instructions to be followed. These warnings are FSCAP warnings and inserted whenever necessary.

G.5.10 Support items work package **<supitemwp>**. This work package shall be prepared as directed by acquiring active and shall combine any the supporting lists described in G.5.4 through G.5.9, as applicable. This work package shall be developed when the data contained in these supporting lists are minimal and creating a separate work package for each list is unnecessary. The work package may include an introduction and the applicable lists described in G.5.4 through G.5.9.

G.5.10.1 Work package identification information **<wpidinfo>**. Work package identification information is required for this work package (refer to 4.8.6.1).

G.5.10.2 Initial setup information. Initial setup information is not required for this work package.

G.5.10.3 Introduction **<intro>**. The work package may include an introduction to the information.

G.5.10.4 Support items lists. The work package shall include the applicable lists described in G.5.4 through G.5.9.

Source: https://assist.dla.mil -- Downloaded: 2016-12-05T17:12Z
Check the source to verify that this is the current version before use.

G.5.11 Additional work packages **<genwp>**. When specified by the acquiring the activity additional work packages shall be prepared when the work packages previously described herein do not support the data/information to be presented.

a. Work package identification information **<wpidinfo>** is required for this work package (refer to 4.8.6.1).
b. Initial setup information is not required for this work package.

G.6 **NOTES.**

The notes in section 6 apply to this appendix.

Source: https://assist.dla.mil -- Downloaded: 2016-12-05T17:12Z
Check the source to verify that this is the current version before use.

FIELD MAINTENANCE REFERENCES

Scope

This work package lists all field manuals, forms, technical manuals and miscellaneous publications referenced in this manual.

FIELD MANUALS

FM 3-3	NBC Decontamination Avoidance
FM 3-19	NBC Reconnaissance
FM 4-25.11	First Aid for Soldiers
FM 9-207	Operation and Maintenance of Ordnance Material in Cold Weather
FM 20-22	Vehicle Recovery Operations
FM 31-70	Basic Cold Weather Manual
FM 31-71	Northern Operations
FM 90-3	Desert Operation
FM 90-6	Mountain Operations

FORMS

FIGURE G-1. Example of references.

Source: https://assist.dla.mil -- Downloaded: 2016-12-05T17:12Z
Check the source to verify that this is the current version before use.

FIGURE G-2. DELETED

FIGURE G-3. DELETED.

Source: https://assist.dla.mil -- Downloaded: 2016-12-05T17:12Z
Check the source to verify that this is the current version before use.

FIELD MAINTENANCE: MAINTENANCE ALLOCATION CHART (MAC)

INTRODUCTION

The Army Maintenance System MAC

This introduction provides a general explanation of all maintenance and repair functions authorized at the two maintenance levels under the Two-Level Maintenance System concept.

This MAC (immediately following the introduction) designates overall authority and responsibility for the performance of maintenance functions on the identified end item or component. The application of the maintenance functions to the end item or component shall be consistent with the capacities and capabilities of the designated maintenance levels, which are shown on the MAC as:

Field - includes two subcolumns, Crew (C) and Maintainer (F)

Sustainment - includes two subcolumns, Below Depot (H) and Depot (D)

The maintenance to be performed at field and sustainment levels is described as follows:

1. Crew maintenance. The responsibility of a using organization to perform maintenance on its assigned equipment. It normally consists of inspecting, servicing, lubricating, adjusting, and replacing parts, minor assemblies, and subassemblies. The replace function for this level of maintenance is indicated by the letter "O" in the third position of the SMR code. A "C" appearing in the fourth position of the SMR code indicates complete repair is possible at the crew maintenance level.

2. Maintainer maintenance. Maintenance accomplished on a component, accessory, assembly, subassembly, plug-in unit, or other portion either on the system or after it is removed. The replace function for this level of maintenance is indicated by the letter "F" appearing in the third position of the SMR code. An "F" appearing in the fourth position of the SMR code indicates complete repair is possible at the field maintenance level. Items are returned to the user after maintenance is performed at this level.

FIGURE G-4. Example of 2 level maintenance MAC introduction.

Source: https://assist.dla.mil -- Downloaded: 2016-12-05T17:12Z
Check the source to verify that this is the current version before use.

FIELD MAINTENANCE: MAINTENANCE ALLOCATION CHART (MAC)

MAINTENANCE ALLOCATION CHART (MAC)
INTRODUCTION
Aviation Maintenance Allocation Chart

The MAC (immediately following the introduction) designates overall authority and responsibility for the performance of maintenance functions on the identified end item or component. The application of the maintenance functions to the end item or component shall be consistent with the capacities and capabilities of the designated maintenance level which are shown on the MAC as:

Field - includes two columns, "O" which corresponds to Aviation Maintenance Company (AMC) and "F" which corresponds to Aviation Support Battalion (ASB)

Sustainment - includes two columns, "L" which corresponds to Theater Aviation Sustainment Maintenance Group (TASMG) and other organizations that have National Maintenance Program certification and "D" which corresponds to Depot .

The maintenance to be performed below depot and in the field is described as follows:

1. **Aviation Maintenance Company (AMC)**. The primary purpose of the aviation maintenance company is to support the momentum of offensive operations. Composition of the AMC will be based on type of operations being supported, nature of the battlefield, and the need for flexibility. AMCs will provide forward positioning of essential maintenance repair parts and supplies, maximum use of support teams, use of airlift/air drops for resupply, for maintenance that does not interfere with the tactical plans and operations. AMCs are agile, mobile, and well equipped. They will carry limited stockpiles of demand supported, essential parts and supplies. The AMC performs battle damage assessment and repair (BDAR) and unit level repairs on Aviation Life Support Systems (ALSS). The AMC performs production control, quality control, and Maintenance Management/Maintenance Test Pilot functions. AMCs will rig aircraft for recovery operations. The AMC manages the battalion maintenance program and operates a central tool room. The AMC conducts forward arming and refueling. AMCs will be comprised of 3 to 4 modular platoons, which are configured to maintain unit level operational readiness and aircraft availability:

FIGURE G-4A. Example of 2 level aviation MAC introduction.

Source: https://assist.dla.mil -- Downloaded: 2016-12-05T17:12Z
Check the source to verify that this is the current version before use.

HMMWV - COMPONENTS OF END ITEM (COEI) AND BASIC ISSUE ITEMS (BII) LISTS

INTRODUCTION

Scope

This work package lists COEI and BII for the HMMWV to help you inventory items for safe and efficient operation of the equipment.

General

The COEI and BII information is divided into the following lists:

Components of End Item (COEI). This list is for information purposes only and is not authority to requisition replacements. These items are part of the HMMWV. As part of the end item, these items must be with the end item whenever it is issued or transferred between property accounts. Items of COEI are removed and separately packaged for transportation or shipment only when necessary. Illustrations are furnished to help you find and identify the items.

Basic Issue Items (BII). These essential items are required to place the HMMWV in operation, operate it, and to do emergency repairs. Although shipped separately packaged, BII must be with the HMMWV during operation and when it is transferred between property accounts. Listing these items is your authority to request/requisition them for replacement based on authorization of the end item by the TOE/MTOE. Illustrations are furnished to help you find and identify the items.

HMMWV - COMPONENTS OF END ITEM (COEI) AND BASIC ISSUE ITEMS (BII) LISTS

Explanation of Entries in the COEI List and BII List

Illus Number. Gives you the number of the item illustrated.

National Stock Number (NSN). Identifies the stock number of the item to be used for requisitioning purposes.

Description, Part Number/(CAGEC). Identifies the Federal item name (in all capital letters) followed by a minimum description when needed. The stowage location of COEI and BII is also included in this entry. The last line below the description is the CAGEC (Commercial and Government Entity Code) (in parentheses) and the part number.

Usable On Code. When applicable, gives you a code if the item you need is not the same for different models of equipment.

U/I. Unit of Issue (U/I) indicates the physical measurement or count of the item as issued per the National Stock Number entry.

Qty Rqr. Indicates the quantity required.

FIGURE G-5. Example of an introduction for COEI and BII lists.

Source: https://assist.dla.mil -- Downloaded: 2016-12-05T17:12Z
Check the source to verify that this is the current version before use.

HMMWV - COMPONENTS OF END ITEM (COEI) AND BASIC ISSUE ITEMS (BII) LISTS

Explanation of Entries in the COEI List and BII List

Item Number. Gives you the reference number of the item listed.

National Stock Number and Illustration. Identifies the stock number of the item to be used for requisitioning purposes and provides an illustration of the item.

Description, Part Number/(CAGEC). Identifies the Federal item name (in all capital letters) followed by a minimum description when needed. The stowage location of COEI and BII is also included in this entry. The last line below the description is the CAGEC (Commercial and Government Entity Code) (in parentheses) and the part number.

Usable On Code. When applicable, gives you a code if the item you need is not the same for different models of equipment.

U/I. Unit of Issue (U/I) indicates the physical measurement or count of the item as issued per the National Stock Number entry.

Qty Rqr. Indicates the quantity required.

FIGURE G-5. Example of an introduction for COEI and BII lists. – Continued.

Source: https://assist.dla.mil -- Downloaded: 2016-12-05T17:12Z
Check the source to verify that this is the current version before use.

HMMWV - ADDITIONAL AUTHORIZATION LIST (AAL)

INTRODUCTION

Scope

This work package lists additional items you are authorized for the support of the HMMWV.

General

This list identifies items that do not have to accompany the HMMWV and that do not have to be turned in with it. These items are all authorized to you by CTA, MTOE, TDA, or JTA.

Explanation of Entries in the AAL

National Stock Number (NSN). Identifies the stock number of the item to be used for requisitioning purposes.

Description, Part Number/(CAGEC). Identifies the Federal item name (in all capital letters) followed by a minimum description when needed. The last line below the description is the part number and the Commercial and Government Entity Code (CAGEC) (in parentheses).

Usable On Code. When applicable, gives you a code if the item you need is not the same for different models of equipment.

U/I. Unit of Issue (U/I) indicates the physical measurement or count of the item as issued per the National Stock Number.

Qty Recm. Indicates the quantity recommended.

FIGURE G-6. Example of an introduction for an additional authorization list.

Source: https://assist.dla.mil -- Downloaded: 2016-12-05T17:12Z
Check the source to verify that this is the current version before use.

HMMWV - EXPENDABLE AND DURABLE ITEMS LIST

INTRODUCTION

Scope

This work package lists expendable and durable items that you will need to operate and maintain the HMMWV. This list is for information only and is not authority to requisition the listed items. These items are authorized to you by CTA 50-970, Expendable/Durable Items (Except Medical, Class V Repair Parts, and Heraldic Items), CTA 50-909, Field and Garrison Furnishings and Equipment or CTA 8-100, Army Medical Department Expendable/Durable Items.

Explanation of Entries in the Expendable/Durable Items List

Item No. This number is assigned to the entry in the list and is referenced in the narrative instructions to identify the item (e.g., Use brake fluid (Expendable/Durable Items List).

Level. This entry identifies the lowest level of maintenance that requires the listed item
C=Operator/Crew, F=Maintainer, H=Below Depot Sustainment, D=Depot.

National Stock Number (NSN). This is the NSN assigned to the item which you can use to requisition it.

Item Name, Description, Part Number/(CAGEC). This column provides the other information you need to identify the item. The last line below the description is the part number and the Commercial and Government Entity Code (CAGEC) (in parentheses).

U/I. Unit of Issue (U/I) code shows the physical measurement or count of an item, such as gallon, dozen, gross, etc.

FIGURE G-7. Example of an introduction for an expendable and durable items list.

Source: https://assist.dla.mil -- Downloaded: 2016-12-05T17:12Z
Check the source to verify that this is the current version before use.

HMMWV - TOOL IDENTIFICATION LIST

INTRODUCTION

Scope

This work package lists all common tools and supplements and special tools/fixtures needed to maintain the HMMWV.

Explanation of Entries in the Tool Identification List

Item No. This number is assigned to the entry in the list and is referenced in the initial setup to identify the item (e.g., Extractor (Tool Identification List, item 32)).

Item Name. This column lists the item by noun nomenclature and other descriptive features (e.g., Gage, belt tension).

National Stock Number (NSN). This is the National Stock Number (NSN) assigned to the item; use it to requisition the item.

Part Number/(CAGEC). Indicates the primary number used by the manufacturer (individual, company, firm, corporation, or Government activity) which controls the design and characteristics of the item by means of its engineering drawings, specifications, standards, and inspection requirements to identify an item or range of items. The manufacturer's Commercial and Government Entity Code (CAGEC) is also included.

Reference. This column identifies the authorizing supply catalog or parts information for items listed in this work package.

FIGURE G-8. Example of an introduction for a tool identification list.

Source: https://assist.dla.mil -- Downloaded: 2016-12-05T17:12Z
Check the source to verify that this is the current version before use.

This page intentionally left blank.

Source: https://assist.dla.mil -- Downloaded: 2016-12-05T17:12Z
Check the source to verify that this is the current version before use.

APPENDIX H

DESTRUCTION OF ARMY MATERIEL TO PREVENT ENEMY USE

H.1 SCOPE

This appendix establishes requirements to develop generic information and/or specific procedures regarding the destruction of Army materiel to prevent enemy use. This Appendix is a mandatory part of the standard. The information contained herein is intended for compliance.

H.2 APPLICABLE DOCUMENTS.

The applicable documents in section 2 of the basic standard apply to this appendix.

H.3 DEFINITIONS.

The definitions in section 3 of the basic manual apply to this appendix.

H.4 GENERAL REQUIREMENTS.

H.4.1 General. The requirements provided in this appendix provide the technical content requirements for the preparation of destruction of Army Materiel procedures. There are several approaches in preparing manuals for destruction of Army materiel. These include, but are not limited to:

a. Instructions or procedures based for a particular stock class (FSC) of materiel.
b. Procedures that provide detailed destruction instructions for specific weapons systems or equipment and any installed subsystems.
c. Simple standardized destruction methods based on the assumption that time and demolition materials may not always be available for carrying out complicated demolition or other destruction procedures.

H.4.1.1 Types of manuals. Each weapon system or major item of equipment shall have destruction procedures prepared that cover the approaches in b and c above. Equipment managers may direct that a generic destruction manual be developed for assets they control in approach a that are not covered in a weapons system specific manual. Equipment managers and weapons system program managers should work together to ensure that destruction procedures do not provide conflicting destruction requirements or overly duplicate destruction procedures. Duplication of destruction procedures is allowed for components in a weapons system, but only those specific procedures (see H.5.2.2) for the component shall be duplicated. Duplication of this information is preferred to having users in a combat situation looking for destruction information in multiple TMs.

H.4.1.1.1 Destruction manuals for a stock class (FSC). When directed by an AMC stock class custodian or manager, a separate destruction TM shall be prepared. The manual shall contain generic destruction procedures and when possible should include specific procedures for each item in the stock class. The requirements in H.5.1 and H.5.2 shall be used.

H.4.1.1.2 Destruction manuals/work packages for weapon systems. Each weapons system shall have destruction procedures developed. If a separate manual is used, these procedures will be contained in a minimum of two work packages. The first shall be a general information **<destruct-ginfowp>** containing the information specified in H.5.1. The second and any succeeding work packages shall contain specific destruction procedures **<destruct-materialwp>** specified in H.5.2.

Source: https://assist.dla.mil -- Downloaded: 2016-12-05T17:12Z
Check the source to verify that this is the current version before use.

H.4.2 Use of the DTD/XSLs. The DTDs referenced in this standard interpret the technical content and structure for the functional requirements contained in this standard and are mandatory for use. The XSLs referenced herein interpret the style and format. A style sheet is used to interperet the style and format for screen display. For additional information on the DTD and specific XSLs, refer to MIL-STD-2361.

H.4.3 Content structure and format. The examples provided herein are an accurate representation of the content structure and format requirements contained in this appendix and shall be followed to permit the effective use of the DTD for destruction of materiel.

H.4.4 Style and format. This standard provides style and format requirements for the technical content requirements described in this appendix. These requirements are considered mandatory and are intended for compliance.

H.4.5 Selective application and tailoring. This standard contains some requirements that may not be applicable to the preparation of all destruction technical manuals. Selective application and tailoring of requirements contained in this standard is the responsibility of the acquiring activity and shall be accomplished using Appendix A, Technical Manual Content Selection Matrixes and guidance contained in this appendix. The applicability of some requirements is also designated by one of the following statements: unless specified otherwise by the acquiring activity; as/when specified by the acquiring activity; or when specified by the acquiring activity.

H.4.6 General destruction rules. When preparing any destruction manual, the following priority guidelines shall be followed. These are provided to ensure a common approach to destruction of material.

a. Any cryptographic equipment or material shall be destroyed first.

b. Classified equipment or material is to be destroyed after any cryptographic assests. A statement to this effect shall be included in the introductory material. The statement destruction of classified material statement is required regardless of the classification of the material covered in the current TM.

c. Essential material shall be destroyed when time precludes the destruction of the entire system. In this case, essential material consists of that material identified for the system or stock class in the manual being prepared. The system manual shall include a list of essential material. A statement shall be included stating that essential material be destroyed in the order provided and that the same material be destroyed on each system (see H.5.1.6).

d. Any repair parts that may be on the verge of capture shall be destroyed in the same order as the essential material.

H.5 DETAILED REQUIREMENTS.

H.5.1 Destruction general information work package **<destruct-ginfowp>**. The destruciton general information workpackage shall have work package identification information **<wpidinfo>**. There is no initial setup required for this work package.

H.5.1.1 Work package identification information **<wpidinfo>**. Work package identification information is required for this work package (refer to 4.8.6.1).

Source: https://assist.dla.mil -- Downloaded: 2016-12-05T17:12Z
Check the source to verify that this is the current version before use.

H.5.1.2 Initial setup information **<wpinfo>**. Initial setup information is not required for this work package (refer to 4.8.6.1.1).

H.5.1.3 Scope of manual. Each destruction general information work package shall have a scope statement. As a minimum, the scope statement shall contain the following text, entered verbatim.

"This manual is for the guidance of those whose duty it is to render inoperable or destroy equipment which is in imminent danger of capture by an enemy."

For destruction procedures that will implement any international standards, the following statement shall be included. For a stand alone destruction manual, the statement shall be in the **<destruct-ginfowp>** scope paragraph. For destruction procedures included in a weapon system manual, this statement shall be included in the "How to Use the Manual".

"Certain provisions of this technical manual (*identify by chapter, work package, paragraph, or similar manner, if appropriate*) are the subject of international standardization agreement (*insert the ABCA or ASCC standard number; the NATO, STANAG, NETR, or NEPR number; or appropriate documentary reference*). When revision or cancellation of this technical manual is proposed which will modify the international agreement concerned, the technical manual management activity will take appropriate action through international standardization channels, including departmental standardization offices, to change the agreement or make other appropriate accommodations."

H.5.1.4 Authority to destroy material. The following paragraph shall be included verbatim.

"Authorization. Only division or higher commanders have the authority to order destruction of equipment. They may however, delegate this authority to subordinate commanders when the situation demands it."

H.5.1.5 Reporting destruction. A paragraph shall be included that requires any destruction activity be reported through command channels.

H.5.1.6 General destruction information. Text shall be included that provides the user with information that is generic to most destruction processes. This data shall include, but is not limited to, the following types of information:

a. Information on types of destructive process such as burning, use of explosives, burying, or self destruction devices/techniques. This explanation shall include the advantages and disadvantages of each process.

b. For complex weapons systems, the reason to perform any subordinate destruction procedures in conjunction those for the weapons system.

c. Any considerations relative to physical location or weather related (wind, rain, temperature) that users should consider when destroying material.

d. Explanations on the priority for materiel destruction (see H.5.1.8).

Source: https://assist.dla.mil -- Downloaded: 2016-12-05T17:12Z
Check the source to verify that this is the current version before use.

H.5.1.7 Degree of destruction. The following information shall be included verbatim:

"Methods of Destruction. Choose methods of destruction which will cause such damage that it will be impossible to restore the equipment to a usable condition within the combat zone.

Classified Equipment. Classified equipment must be destroyed to such a degree as to prevent duplication by, or revealing means of operation or function to the enemy.

Associated Classified Documents. Any classified documents, notes, instructions, or other written material pertaining to function, operation, maintenance, or employment, including drawings or parts lists, must be destroyed in a manner to render them useless to the enemy."

H.5.1.8 Essential components and spare parts. When specified by the acquiring activity, the destruction procedures may identify essential components whose destruction will incapacitate the weapons system. In certain conditions, the destruction of essential components may be used. If destruction of essential components is allowed, statements shall be included that for each weapons system, the same components will be destroyed. A similar statement shall be included that for any spare parts requiring destruction, the same essential spare parts shall be destroyed.

If a weapons system determines component parts to be essential, they should notify the components item manager so they may identify those items for higher priority destruction in any item level destruction procedures manual.

H.5.2 Destruction procedures work package **<destruct-materialwp>**. The destruction procedures work package shall have work package identification information **<wpidinfo>**. Initial setup **<wpinfo>** is required for this work package. The destruction procedures work package shall contain only destruction procedures. All general or explanatory information shall be contained in the destruction general informaiton work package (see H.5.1).

H.5.2.1 Work package identification information **<wpidinfo>**. Work package identification information is required for this work package (refer to 4.8.6.1).

H.5.2.2 Initial setup information **<wpinfo>**. Initial setup information is required for this work package (refer to 4.8.6.1.1).

H.5.2.3 Parts list. When a weapons system TM contains a requirement to allow destruction of essential or spare parts (see H.5.1.6), a list of essential components and spares shall be developed and included in the work package.

H.5.2.4 Specific destruction procedures. The destruction procedures work package shall include specific destruction procedures for the weapons system or items (for item level TMs). When required, specific procedures to destroy subordinate components shall be included. Specific destruction procedures for subordinate components shall not be referenced. As applicable, the order the procedures should be applied and the results of applying in the wrong order shall be included in this work package. When destruction procedures are developed, authors shall ensure the procedures utilize resources a soldier in the field would have readily accessible. The following methods shall be included as applicable:

a. Self destruction options.

b. Explosive devices.

c. Improper operation.

Source: https://assist.dla.mil -- Downloaded: 2016-12-05T17:12Z
Check the source to verify that this is the current version before use.

d. Fire.

e. Mechanical devices (e.g., sledgehammers, crowbars, cranes, etc.).

f. Natural surroundings (e.g., rivers, lakes, caves, burying, hiding in vegetation, etc).

As applicable, the procedures shall identify the points on the equipment that would be most advantageous to apply the above methods (e.g., where to place explosives or where to apply force with a mechanical device).

H.5.2.3 Classified equipment and documents. Special instructions for destruction of classified equipment and documents shall be provided.

H.6 NOTES.

The notes in section 6 apply to this appendix.

Source: https://assist.dla.mil -- Downloaded: 2016-12-05T17:12Z
Check the source to verify that this is the current version before use.

This page intentionally left blank.

Source: https://assist.dla.mil -- Downloaded: 2016-12-05T17:12Z
Check the source to verify that this is the current version before use.

APPENDIX I
BATTLE DAMAGE ASSESSMENT AND REPAIR (BDAR)

I.1 SCOPE

The requirements provided in this appendix provide the technical content requirements for the preparation of BDAR procedures. This appendix covers only assessment and repair of equipment failures occurring on the battlefield. This repair is sometimes limited to such means of fixing as bypassing, patching, or jury-rigging components, or the use of alternative procedures to restore the equipment/system performance to a minimum operating condition. Fix procedures in BDAR information are for use in combat only. Standard maintenance procedures are used as soon as practicable.

I.2 APPLICABLE DOCUMENTS.

The applicable documents in section 2 of the basic standard apply to this appendix.

I.3 DEFINITIONS.

The definitions in section 3 of the basic manual apply to this appendix.

I.4 GENERAL REQUIREMENTS.

1.4.1 Maintenance level. Unless otherwise specified, BDAR repair functions shall be accomplished by the following maintenance levels:

a. Field (operator/crew/service/Aviation Maintenance Company (AMC)) - performed by operator/crew or by forward organizational maintenance team (MT).

b. Field (field/Aviation Support Battalion (ASB)). - performed by field or ASB, when damage exceeds service repair capability. When required repair time or tactical conditions dictate, the damaged/failed item will be recovered or evacuated as appropriate.

I.4.2 Use of the DTD/XSLs. The DTDs referenced in this standard interpret the technical content and structure for the functional requirements contained in this standard and are mandatory for use. The XSLs referenced herein interpret the style and format. A style sheet is used to interpret the style and format for screen display. For additional information on the DTD and specific XSLs, refer to MIL-STD-2361.

I.4.3 Content structure and format. The examples provided herein are an accurate representation of the content structure and format requirements contained in this appendix and shall be followed to permit the effective use of the DTD for BDAR information.

I.4.4 Style and format. This standard provides style and format requirements for the technical content requirements described in this appendix. These requirements are considered mandatory and are intended for compliance.

Source: https://assist.dla.mil -- Downloaded: 2016-12-05T17:12Z
Check the source to verify that this is the current version before use.

I.4.5 Selective application and tailoring. This standard contains some requirements that may not be applicable to the preparation of all BDAR information. Selective application and tailoring of requirements contained in this standard is the responsibility of the acquiring activity and shall be accomplished using Appendix A, Technical Manual Content Selection Matrixes and guidance contained in this appendix. The applicability of some requirements is also designated by one of the following statements: unless specified otherwise by the acquiring activity; as/when specified by the acquiring activity; or when specified by the acquiring activity.

I.5 DETAILED REQUIREMENTS

I.5.1 Content. Content shall be directed to fix-forward battlefield conditions, that is, repairs must be made as quickly as possible and to the extent necessary to restore or maintain the applicable equipment/system. Unless otherwise specified by the acquiring activity, content and order of presentation shall be as specified in this appendix. The following statement shall appear at the beginning of each work package in the BDAR information:

> BDAR FIXES SHALL BE USED ONLY IN COMBAT OR FOR TRAINING AT THE DISCRETION OF THE COMMANDER. (AUTHORIZED TRAINING FIXES ARE LISTED IN THE BDAR TRAINING PROCEDURES WORK PACKAGE.) IN ANY CASE, DAMAGE SHALL BE REPAIRED BY STANDARD MAINTENANCE PROCEDURES AS SOON AS PRACTICABLE.

I.5.1.1 Operating procedures. Operating procedures in BDAR manuals shall be restricted to testing a system, subsystem, or component for the purpose of damage assessment, or testing after a field expedient repair has been performed. If any change to normal operating procedures is made, the new procedures to be followed shall be given.

I.5.2 BDAR information work packages. BDAR information shall consist of the following work packages:

I.5.2.1 General information work package <**bdar-geninfowp**>. This work package shall contain information that is general in nature. It shall inform the user/reader of the purpose and scope of the BDAR information and its relationship to user personnel, other publications, and the end item/system it supports. In addition, this work package shall include definitions, standards, practices, identification of responsibilities, and tasks to be performed.

I.5.2.1.1 Work package identification information **<wpidinfo>**. Work package identification information is required for this work package (refer to 4.8.6.1).

I.5.2.1.2 Initial setup information **<wpinfo>**. Initial setup information is not required for this work package.

I.5.2.1.3 BDAR fixes statement. The BDAR fixes statement given in paragraph I.5.1 shall be included in this work package.

Source: https://assist.dla.mil -- Downloaded: 2016-12-05T17:12Z
Check the source to verify that this is the current version before use.

I.5.2.1.4 Introduction. This paragraph shall state the purpose and scope of the BDAR information and how it is applied to the task of BDAR. As a minimum, this paragraph shall contain subparagraphs as follows:

a. Purpose. This subparagraph shall contain an explanation of the purpose of the BDAR.

b. Scope. This subparagraph shall contain information on the scope of the BDAR information.

c. Application. This subparagraph shall contain Information on how to apply the BDAR information.

d. Definitions. Any terms used in the BDAR information that are new or peculiar to BDAR shall be defined. These terms shall only apply to BDAR. For manuals with BDAR included in them, these terms not be included in any other listing of terms in the manual.

e. Forms. This paragraph shall contain a reference to FM 4-30.31 for forms required for BDAR.

I.5.2.1.5 Standards and practices. This paragraph shall contain information pertaining to standards and practices peculiar to combat conditions. It shall include, as a minimum, the subparagraph headings and data (expanded as applicable) as follows:

a. BDAR Characteristics - explanation of the expediency of repair, reason for deviation from standard maintenance practices, need to take greater risks, and other characteristics peculiar to repair under combat conditions.

b. Waiver of precautions - reference to deviations from normal peacetime precautions, and if such deviations are summarized in another portion of the BDAR information, reference shall be made to that portion.

c. Operating characteristics - minimum functional combat capability criteria for the applicable end item/system.

d. Training - explanation/rationale concerning use of BDAR fixes for training and list of all BDAR procedures which are authorized for training. The fix (training) procedures shall be grouped by major system(s) or components(s) as they appear in the BDAR information. Each procedure shall be cross-referenced to the work package where it appears. The following statement shall be included:

"After completion of training, the end item/system shall be returned to full serviceable condition using regular repair procedures as applicable."

I.5.2.1.6 Tasks and responsibilities. This paragraph shall consist of tasks that may be required as a result of battlefield damage. The person/group responsible for each task shall be identified. The tasks shall appear in the order in which they should be performed. This information shall be presented in narrative form. This section shall include the following subparagraphs:

Source: https://assist.dla.mil -- Downloaded: 2016-12-05T17:12Z
Check the source to verify that this is the current version before use.

a. Tagging/identifying BDAR repairs - instructions for identifying components affected by BDAR fixes.

b. Reports - instructions for completing reports resulting from BDAR fixes.

I.5.2.1.7 Combat Threats (Aviation Only). This paragraph shall consist of the description of damage from threats confronting aircraft while on combat missions from armor-piercing, armor piercing incendiary projectiles, and high-explosive incendiary projectiles and from exposure to bombs, mortars, and artillery fragments and blasts when on the ground. The resulting effects on the metal airframe structure and follow-on effects should the mission be continued, of secondary damage such as cracks, crippling, or buckling and loss or damage to mechanical fasteners shall be given. Structure damage modes shall be defined for the type of materials and structure affected.

I.5.2.2. Battle damage assessment work package(s) <**damage-assesswp**>. There shall be multiple battle damage assessment work packages. Each of these work packages shall contain an introduction and fault assessment tables. The work packages shall be organized as follows:

a. End item. These shall be a battle damage assessment work package pertaining to the overall end item or major subsystems and its capability to perform its mission essential functions.

b. Major functional group. Unless otherwise specified by the acquiring activity, these work packages shall be titled, arranged, and correspond to the functional groups as they appear in the maintenance allocation chart (MAC) and the parts information. The total number of work packages in the BDAR information shall be determined by the number of major functional groups applicable to the equipment/system covered by the manual.

c. Auxiliary Equipment. As required, there shall be battle damage assessment work packages for any auxiliary equipment.

Each battle damage assessment work package shall be formatted and shall contain the information in paragraphs I.5.2.2.1 through I.5.2.2.5 below.

I.5.2.2.1 Work package identification information **<wpidinfo>**. Work package identification information is required for this work package (refer to 4.8.6.1).

I.5.2.2.2 Initial setup information **<wpinfo>**. Initial setup information is not required for this work package.

I.5.2.2.3 BDAR fixes statement. The BDAR fixes statement given in paragraph I.5.1 shall be included in this work package.

I.5.2.2.4 Introduction. The primary purpose of this paragraph shall be to introduce the assessment table(s) in the work package. It shall contain paragraphs that will cover the scope of the work package and application of assessment tables.

Source: https://assist.dla.mil -- Downloaded: 2016-12-05T17:12Z
Check the source to verify that this is the current version before use.

I.5.2.2.5 Fault assessment tables. This paragraph shall contain assessment tables that lead the user to a repair procedure or another chart/table that will further aid in analyzing/assessing damage. As specified by the acquiring activity, the format of assessment tables shall be either a troubleshooting procedure or a table. See figures I-1 and I-2 for examples. The assessment procedures shall be developed and arranged so that logical and expedient methods are used to locate trouble.

I.5.2.3 Repair work package <**genrepairwp**>. Unless otherwise specified by the acquiring activity, these work packages shall provide information for battlefield repair of end items, components, etc. The following types of repair work packages shall be included in the BDAR information module:

a. General repair. As required, there shall be procedures provided for items that are not necessarily associated with a specific component or subsystem of the end item.

b. End item repair. Procedures for repair of the overall end item shall be provided.

c. Major functional group repair. Unless otherwise specified by the acquiring activity, these work package(s) shall be titled, arranged, and correspond to the functional groups as they appear in the maintenance allocation chart (MAC) and the parts information. The total number of work packages in the BDAR repair information shall be determined by the number of major functional groups applicable to the equipment/system covered by the manual.

d. Auxiliary equipment. As required, procedures for repair of battle damage to auxiliary equipment shall be provided.

Each repair work package shall comply with the requirements contained in I.5.2.3.1 through I.5.2.3.5 below.

I.5.2.3.1 Work package identification information **<wpidinfo>**. Work package identification information is required for this work package (refer to 4.8.6.1).

I.5.2.3.2 Initial setup information **<wpinfo>**. Initial setup information is required for this work package (refer to 4.8.6.1.1).

I.5.2.3.3 BDAR fixes statement. The BDAR fixes statement given in paragraph I.5.1 shall be included in this work package.

I.5.2.3.4 Introduction. This paragraph shall contain subparagraphs as follows:

a. Scope - brief statement that describes the purpose and application of the overall coverage of the work package.

b. Repair procedure index - list of all procedures contained in the work package, listed in the order in which they appear. Procedures authorized for training and listed in the training fixes work package shall be boxed in.

Source: https://assist.dla.mil -- Downloaded: 2016-12-05T17:12Z
Check the source to verify that this is the current version before use.

I.5.2.3.5 Repair procedure. This paragraph shall contain the repair procedure for the item(s) covered in the work package. The format and content of these paragraphs shall be as follows:

a. General - remarks concerning general nature and causes related to the damage and repair of the item. These remarks shall be brief.

b. (Item name, trouble) - item name and the trouble shall be used as the subparagraph side head. The side head shall be followed with a general statement(s) concerning the particular type of trouble and repair to be made. Statement(s) shall be brief and as concise as possible. Subparagraphs shall be as follows:

(1) Limitations - this statement(s) shall identify the limits that would be imposed on the equipment/end item, in relation to operational capability, if the fix that follows is performed.

(2) Personnel/time required - the number of personnel and time required to accomplish the fix shall be listed as follows:

1 soldier - 1.0 hrs (express time in decimal point hours to the nearest one-tenth hour).

(3) Materials/tools - list of materials and tools (peculiar) needed to make the BDAR fix. Following each item listed shall be a reference (in parenthesis) to that item number and work package (e.g., "hose, WP 0048, item 4)." Reference to tools shall reference instructions for tool fabrication when applicable. Any other necessary information (such as quantities and sizes) shall be provided.

(4) Procedural steps - each step shall be listed numerically and placed in the sequential order in which it will be performed. Steps shall be as prescribed in 4.8.10. The last procedural step for every BDAR fix shall be: "Record BDAR action taken. When mission is complete, as soon as practical, repair the equipment/system using standard maintenance procedures."

c. Options - more than one method of making the same repair/fix. Options shall be listed in order of effectiveness and listed consecutively as option 1, option 2, etc. Each option provided under the item name/trouble paragraph side head (b. above) shall contain subparagraphs: Limitations, Personnel/time required, Materials/tools, and Procedural steps. Alternatives that do not include fixes shall also be listed as options.

d. (Item name, category) - when the basic item, identified in the section title, is divided into categories or types, each specific item shall be titled and covered within a separate paragraph. Each of these paragraphs shall contain only the information that applies to that specific item. For example: Information or procedures under a heading "high pressure" shall pertain to high pressure; low pressure information/procedures (if applicable) shall appear under the heading, "low pressure."

I.5.2.4 References work package. References for BDAR information shall be included in the references work package for the IETM. BDAR shall not have its own references work package.

Source: https://assist.dla.mil -- Downloaded: 2016-12-05T17:12Z
Check the source to verify that this is the current version before use.

I.5.2.5 Special or fabricated tools work package <**bdartoolswp**>. The special or fabricated tools work package shall consist of the following:

I.5.2.5.1 Work package identification information **<wpidinfo>**. Work package identification information is required for this work package (refer to 4.8.6.1).

I.5.2.5.2 Initial setup information **<wpinfo>**. Initial setup information is only required for this work package (refer to 4.8.6.1.1) if there are fabricated tools.

I.5.2.5.3 BDAR fixes statement. The BDAR fixes statement given in paragraph I.5.1 shall be included in this work package.

I.5.2.5.4 Content and format. This work package shall contain a list of all tools and test equipment that are required for BDAR procedures and that are not common. This list shall be prepared in accordance with the requirements for a tool identification list in paragraph G.5.7.4. When fabrication of tools is required for BDAR, this work package shall also contain fabrication instructions for those tools. The fabrication instructions shall be prepared in accordance with the requirements for an illustrated list of manufactured items contained in paragraphs E.5.3.9.4 and E.5.3.9.5.

I.5.2.6 Expendable and durable items work package. Expendable and durable items required for BDAR information shall be included in the expendable and durable items list work package for the IETM. BDAR shall not have its own expendable and durable items list work package.

I.5.2.7 Substitute materials/parts work package <**substitute-matwp**>. The substitute materials/parts work package shall consist of the following:

I.5.2.7.1 Work package identification information **<wpidinfo>**. Work package identification information is required for this work package (refer to 4.8.6.1).

I.5.2.7.2 Initial setup information **<wpinfo>**. Initial setup information is not required for this work package.

I.5.2.7.3 BDAR fixes statement. The BDAR fixes statement given in paragraph I.5.1 shall be included in this work package.

I.5.2.7.4 Content. This work package shall list materials and parts that may be used for BDAR fixes. Lists or tables shall include the primary material/part, the substitute/alternate material/part, and remarks (when applicable) that identify the limitations or degradation effected by use of the substitutes. The work package shall be divided into paragraphs by material type. When paragraphs are required, the first paragraph shall be titled introduction and shall provide a general explanation of the purpose and content of the other paragraphs. When applicable, a paragraph shall be dedicated to petroleum, oil, and lubricant (POL) substitutes. For example of alternate/substitute material listing, see Figure I-3. For examples of POL substitutes, see Figures I-4 and I-5.

I.6 NOTES.

The notes in section 6 apply to this appendix.

Source: https://assist.dla.mil -- Downloaded: 2016-12-05T17:12Z
Check the source to verify that this is the current version before use.

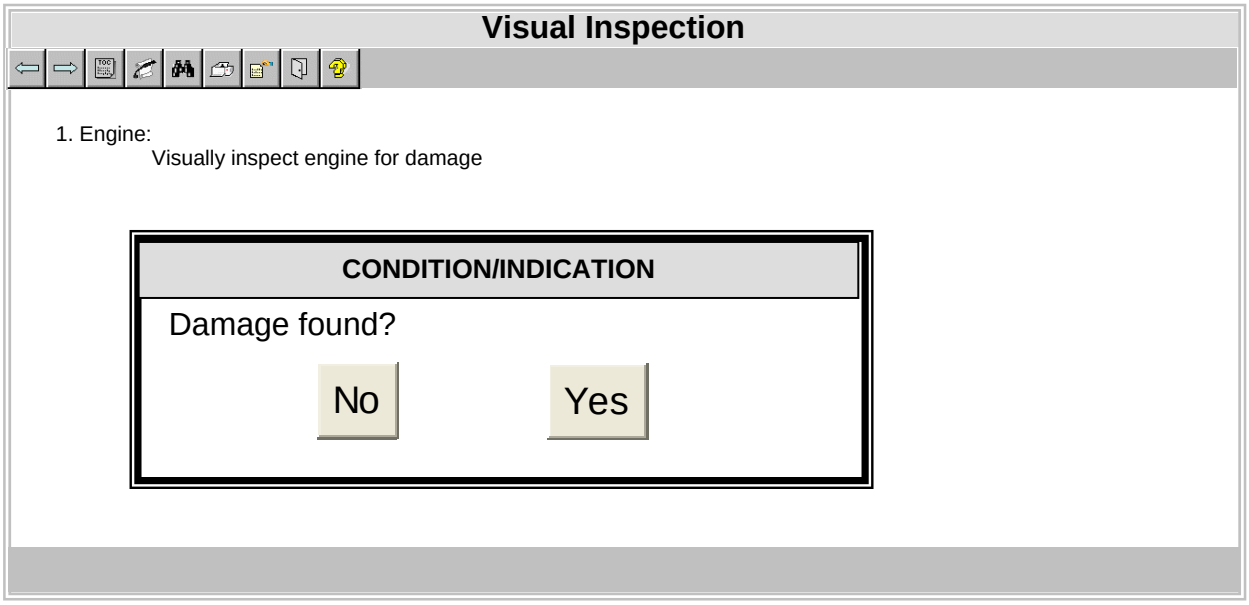

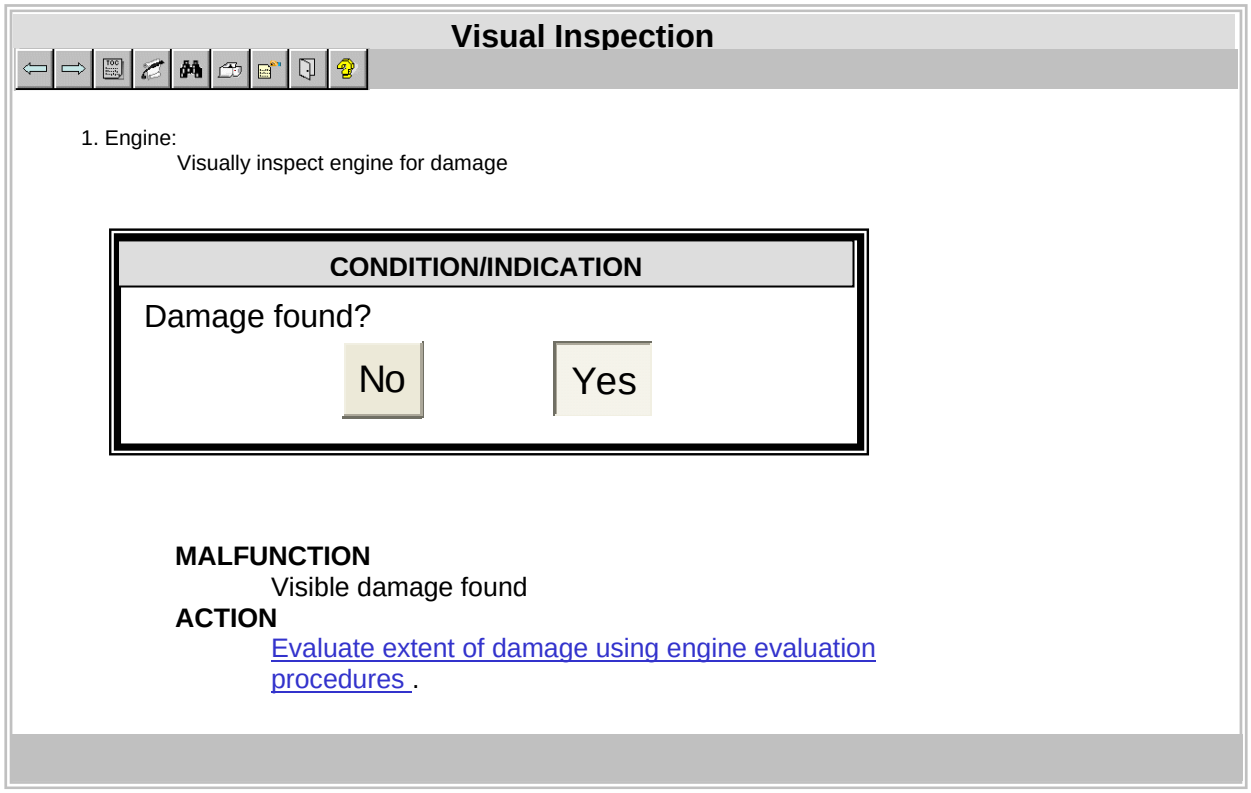

FIGURE I-1. Example of BDAR assessment troubleshooting procedure.

Source: https://assist.dla.mil -- Downloaded: 2016-12-05T17:12Z
Check the source to verify that this is the current version before use.

BDAR Fault Assessment Table

How to use the fault assessment tables:

a. A fault assessment table is organized so the user can quickly assess a particular system or capability by asking a series of questions.

b. First, ask a question. Your replay will be either a “yes” or “no”. If it is “yes”, then you have no problem so go to the next question.

c. If it is “no”, then click on link in column 2 to proceed to appropriate location.

Table 1. Mobility

Does engine start/run?	If no go to BDAR ignition repair
Does tank move in “D” and “R”?	If no go to BDAR transmission repair
Are the track and suspension in tact?	If no go to BDAR track repair Or go to BDAR suspension repair
Does tank steer/pivot?	If no go to BDAR steering repair
Does tank brake?	If no go to BDAR brake repair
Does tank have full power	If no go to BDAR battery repair

FIGURE I-2. Example of BDAR assessment table.

Source: https://assist.dla.mil -- Downloaded: 2016-12-05T17:12Z
Check the source to verify that this is the current version before use.

Substitute Materials/Parts for BDAR

Table 1. Hull Spares and Repair Parts

Parts		Applies To		From Weapons System					
NSN	Description	M1 (PM)	M1A1	M2 M3 Tank	M34 A2 Track	M48 A5 Family	M60 Family	M88 Family	M109 Veh
5935-00-001-7325	Connector Plug	X	X	X					
5315-00-014-1283	Pin, Straight, Headless	X	X			X	X		
2530-00-015-2774	Spacer, Hub Track	X	X	X		X	X	X	X
4730-00-018-9566	Plug, Pipe	X	X	X		X	X	X	X
4730-00-050-4203	Fitting, Lubrication	X	X			X	X		
4730-00-050-4208	Fitting, Lubrication	X	X			X	X		
5340-00-057-3537	Clevis, Road End	X	X			X	X		
2530-01-201-4816	Roadwheel Assembly	X	X				X	X	
4730-00-080-9847	Adaptor, Straight	X	X			X	X	X	X
5340-00-088-4254	Clamp, Loop	X	X			X	X		
5340-00-088-6655	Clamp, Loop	X	X			X	X		
2920-00-088-8613	Motor, Field Winding	X	X				X		

FIGURE I-3. Example of substitute materials list.

Source: https://assist.dla.mil -- Downloaded: 2016-12-05T17:12Z
Check the source to verify that this is the current version before use.

Substitute Lubricants and Hydraulic Fluids List

Table 2. Substitute Lubricants and Hydraulic Fluids

PRIMARY				ALTERNATE		EXPEDIENT	NOTES
Lubrication Point	Temperature Range	Military Specifications	NATO Product	US or NATO Equivalent	Soviet		
Gun Bore	Above 32°F +40°F/65°F	(PL-M) MIL-L-3150 PL-S VV-L-800	02-192 0-190				Not BDAR critical
Bore Evacuator	Above 32°F +40°F/65°F	(PL-M) MIL-L-3150 PL-S VV-L-800	0-192 0-190	OE/HDO-10 MIL-L-2104 OEA, MIL-G-46167			
Breech Block	Above 32°F +40°F/65°F	(PL-M) MIL-L-3150 PL-S VV-L-800	0-192 0-190	Any MIL-L-2104 OEA, MIL-G-46167			
Grenade Dischargers	Above 32°F +40°F/65°F	(PL-M) MIL-L-3150 PL-S VV-L-800	0-192 0-190	Any MIL-L-2104 OEA, MIL-G-46167			Not BDAR critical

FIGURE I-4. Example of substitute lubricants and hydraulic fluids list.

Source: https://assist.dla.mil -- Downloaded: 2016-12-05T17:12Z
Check the source to verify that this is the current version before use.

Substitute Fuels List

Table 3. Substitute Fuels for Diesel Fuel W-F-800, DF-1, and NATO-F-54

Primary Fuel	Alternate Fuel	Expedient Fuel	Military Specification	Commercial Specification
Diesel Fuel VV-F-800 DF-1 NATO-F-54	See Below	See Below	X	
	*Automotive Diesel: ASTM-D-975 (1-D and 2-D)			X
	Kerosene: ASTM-D-3699			X
	Fuel Oil: ASTM-D-396 (Numbers 1 and 2)			X
	Distillate: NATO-F-75 (Low pour point)		X	
	Kerosene: NATO-F-5B		X	
	Aviation Turbine: MIL-T-5624 (JP4 and JP5) NATO-F-40		X	X

FIGURE I-5. Example of Substitute Fuels List.

Source: https://assist.dla.mil -- Downloaded: 2016-12-05T17:12Z
Check the source to verify that this is the current version before use.

APPENDIX I

CONCLUDING MATERIAL

Custodians:

Army - TM

Marine Corps - MC

Preparing Activity:

Army - TM

Review Activities:

Army - AC1, AR, AT, AV,

CR,EA, MI, PT

Project Number:

TMSS 2008-004

NOTE: The activities listed above were interested in this document as of the date of this document. Since organizations and responsibilities can change , you should verify the currency of the information above using the ASSIST Online database at http://assist.daps.dla.mil/online/start.

Source: https://assist.dla.mil -- Downloaded: 2016-12-05T17:12Z
Check the source to verify that this is the current version before use.