METRIC

MIL-STD-2042-7(SH)
25 July 2002

DEPARTMENT OF DEFENSE
STANDARD PRACTICE

FIBER OPTIC CABLE TOPOLOGY INSTALLATION STANDARD METHODS FOR NAVAL SHIPS (PIERSIDE CONNECTIVITY CABLE ASSEMBLIES AND INTERCONNECTION HARDWARE)

(PART 7 OF 7 PARTS)

AMSC N/A AREA SESS

DISTRIBUTION STATEMENT A: Approved for public release; distribution is unlimited.

Source: https://assist.dla.mil -- Downloaded: 2016-12-10T08:13Z
Check the source to verify that this is the current version before use.

FOREWORD

1. This Department of Defense Standard Practice is approved for use by the Naval Sea Systems Command, Department of the Navy, and is available for use by all Departments and Agencies of the Department of Defense.

2. Beneficial comments (recommendations, additions, deletions) and any pertinent data which may be of use in improving this document should be addressed to: Department of the Navy, Naval Sea Systems Command, ATTN: SEA 05Q, 1333 Isaac Hull Avenue Southeast, Stop 5160, Washington Navy Yard, DC 20376-5160 by using the self-addressed Standardization Document Improvement Proposal (DD Form 1426) appearing at the end of this document or by letter.

3. This standard practice provides detailed information and guidance to personnel concerned with the installation of fiber optic cable topologies on Naval surface ships and submarines. The methods specified herein are not identifiable to any specific ship class or type, but are intended to standardize and minimize variations in installation methods to enhance the compatibility of the installations on all Naval ships.

4. In order to provide flexibility in the use and update of the installation methods, this standard practice is issued in eight parts; the basic standard practice and seven numbered parts as follows:

Part 1 Cables
Part 2 Equipment
Part 3 Cable Penetrations
Part 4 Cableways
Part 5 Connectors and Interconnections
Part 6 Tests
Part 7 Pierside Connectivity Cable Assemblies and Interconnection Hardware

Source: https://assist.dla.mil -- Downloaded: 2016-12-10T08:13Z
Check the source to verify that this is the current version before use.

CONTENTS

PARAGRAPH		PAGE
1.	SCOPE	1
1.1	Scope	1
1.1.1	Applicability	1
2.	APPLICABLE DOCUMENTS	2
2.1	General	2
2.2	Government documents	2
2.2.1	Specifications, standards and handbooks	2
2.2.2	Other government documents	2
2.3	Non-government publications	3
2.4	Order of precedence	3
3.	DEFINITIONS	4
3.1	General fiber optics terms	4
3.2	Alignment sleeve, cavity fixed	4
3.3	Alignment sleeve, terminus fixed	4
3.4	Authorized approval.	4
3.5	Cable assembly	4
3.6	Communication link	4
3.7	Composite cables	4
3.8	Cross connect assembly	4
3.9	Detachable socket insert	4
3.10	End-to-end cable link	4
3.11	End user equipment	4
3.12	Hermaphroditic connector	4
3.13	Hermaphroditic cable plug	4
3.14	Hermaphroditic receptacle	5
3.15	Hybrid cables	5
3.16	Installing activity	5
3.17	Interconnection hardware	5
3.18	Loss budget	5
3.19	MQJ (Measurement Quality Jumper)	5
3.20	Optical fiber cable component (OFCC).	6
3.21	ORL (Optical Return Loss)	6
3.22	Pierside cable	6
3.23	Pierside connectivity fiber optic cable assemblies and interconnection hardware	6
3.24	Pigtail assembly	7
3.25	Reflectance	7
3.26	Single-fiber cable	7
3.27	Termination	7
3.28	Umbilical assembly	7
4.	GENERAL REQUIREMENTS	9
4.1	Fiber optic cable connection	9
4.1.1	Connection component selection	9
4.2	Fiber connectors	9
4.2.1	Installation	9
4.3	Fiber optic splices	9
4.4	Tests	9
4.5	Safety precautions	9
5.	DETAILED REQUIREMENTS	11
5.1	Hermaphroditic connector installation	11
5.1.1	Termini on shipboard cable OFCC ends	11
5.1.2	Pigtail assembly	11
5.1.3	Umbilical assembly	11
5.2	Light duty connector installation	11

Source: https://assist.dla.mil -- Downloaded: 2016-12-10T08:13Z
Check the source to verify that this is the current version before use.

CONTENTS

PARAGRAPH		PAGE
5.3	Shipboard connector pinout and patching positions (wiring diagram)	11
5.3.1	Configurations	11
5.3.1.1	Class T	12
5.3.1.2	Class S	12
5.3.1.3	Class P	12
5.3.1.4	Class B	12
5.3.2	Fiber designations	12
5.3.3	Radio room patch panel layout (see figure 7-7 and figure 7-8)	12
5.3.3.1	Version I, Class T and P; Version II, Class T; Version III, Class T and P; Version IV, Class T (see figure 7-7)	12
5.3.3.2	Version I, class S (see figure 7-7)	13
5.3.3.3	Version II, class S (see figure 7-7)	13
5.3.3.4	Version II, class P (see figure 7-7)	13
5.3.3.5	Version V, class B (see figure 7-8)	14
5.3.4	Hermaphroditic connector pinout designations	15
5.4	Shipboard interconnection box placement guidelines	36
5.4.1	Cleanliness considerations	36
5.4.2	Description of the two preferred pierside connectivity installation schemes	36
5.4.3	Installation "A" guidance	38
5.4.4	Installation "B" guidance	38
5.4.5	Description of alternate pierside connectivity installation schemes	39
5.4.6	Routing for port to starboard cable runs	44
5.4.7	Shipboard interconnection box footprint and mounting dimensions	44
5.5	Pier interconnection box placement guidelines	44
5.5.1	Pier configuration	44
5.5.2	Cleanliness considerations	45
5.5.3	Pier interconnection box footprint and mounting dimensions	45
5.5.4	Pier interconnection box usage (sealed versus vented configuration)	47
5.6	Umbilical assembly routing schemes with ships nested at a berth	48
5.6.1	Types of routing schemes	48
5.6.2	Surface ship piers	49
5.6.3	Submarine piers	49
5.7	Number of pigtail assemblies per pier interconnection box	49
5.7.1	Pier interconnection box for through-the-ship nesting or no nesting	49
5.7.2	Pier interconnection box for over-the-deck nesting	49
5.8	Pier interconnection box patch panel designations	49
5.8.1	NAVSEA Drawing 7325761, item 6003AK interconnection box	49
5.8.2	NAVSEA Drawing 7325761, item 6003AE interconnection box	50
5.9	Pier interconnection box patching positions	50
5.9.1	Pier patch panel layout	50
5.9.2	Configurations	51
5.9.3	Alternate pier patch panel layout	51
5.10	Description of alternative pierside connectivity installation schemes	59
5.10.1	Loss budget requirement	59
5.10.2	Cable length requirements	59
5.10.3	Guidelines when high optical loss is encountered	62
6.	NOTES	69
6.1	Intended use	69
6.2	Issue of DODISS	69
6.3	Standard method designation	69
6.4	Subject term (key word) listing	69

Source: https://assist.dla.mil -- Downloaded: 2016-12-10T08:13Z
Check the source to verify that this is the current version before use.

CONTENTS

METHOD		PAGE
7A1-1	Installation of termini onto shipboard cable	7A1-1
7A1-2	Installation of termini in hermaphroditic cable plugs onto pierside cable	7A1-17
7B1-1	Interconnection box hermaphroditic receptacle installation	7B1-1
7B1-2	Interconnection box cable routing to a patch panel	7B1-3
7B1-3	Interconnection box cable routing to a hermaphroditic receptacle	7B1-4
7C1-1	Securing the umbilical assembly using cable grips	7C1-1
7C1-2	Installing rat guards	7C1-3
7D1-1	Unspooling operation	7D1-1
7D1-2	Spooling operation	7D1-5
7D1-3	Initial spooling operation	7D1-8
7E1-1	Standard connector cleaning	7E1-1
7E1-2	Connector cleaning with terminus cleaning	7E1-2
7E1-3	Connector de-mating and dust cover cleaning	7E1-4
7F1-1	Cable assembly loss test	7F1-1
7F1-2	End-to-end attenuation test	7F1-8
7G1-1	Interconnection box installation	7G1-1
7H1-1	Positioning and mating a hermaphroditic cable plug	7H1-1
7H1-2	Concatenating of a crossconnect assembly with a hermaphroditic cable plug	7H1-6
7H1-3	Attachment of an umbilical assembly or crossconnect assembly with a hermaphroditic receptacle	7H1-6
7H1-4	De-mating the hermaphroditic connector	7H1-7
7I1-1	Cable assembly optical return loss measurement	7I1-1
7I1-2	Concatenated cable assemblies optical return loss measurement	7I1-9
7J1-1	Hermaphroditic connector measurement quality jumper acceptance test for optical loss	7J1-1
7J1-2	Measurement quality jumper acceptance test for optical reflectance	7J1-5

TABLE		PAGE
7-I	Network configuration versions	11
7-II	Multimode cable connections for version I, class T network configuration	16
7-III	Single mode cable connections for version I, class T network configuration	17
7-IV	Multimode cable connections for version I, class S network configuration	18
7-V	Single mode cable connections for version I, class S network configuration	19
7-VI	Multimode cable connections for version I, class P network configuration	20
7-VII	Single mode cable connections for version I, class P network configuration	21
7-VIII	Multimode cable connections for version II, class T network configuration	22
7-IX	Single mode cable connections for version II, class T network configuration	23
7-X	Multimode cable connections for version II, class S network configuration	24
7-XI	Single mode cable connections for version II, class S network configuration	25
7-XII	Multimode cable connections for version II, class P network configuration	26
7-XIII	Single mode cable connections for version II, class P network configuration	27
7-XIV	Multimode cable connections for version III, class T network configuration	28

Source: https://assist.dla.mil -- Downloaded: 2016-12-10T08:13Z
Check the source to verify that this is the current version before use.

CONTENTS

TABLE		PAGE
7-XV	Single mode cable connections for version III, class T network configuration	29
7-XVI	Multimode cable connections for version III, class P network configuration	30
7-XVII	Single mode cable connections for version III, class P network configuration	31
7-XVIII	Multimode cable connections for version IV, class T network configuration	32
7-XIX	Single mode cable connections for version IV, class T network configuration	33
7-XX	Multimode cable connections for version V, class B network configuration	35
7-XXI	Single mode cable connections for version V, class B network configuration	35
7-XXII	Cable configurations for various ship classes	39
7-XXIII	One cable configuration for ship with limited service	41
7-XXIV	Cable configurations for submarine classes	41
7-XXV	Pier configuration	45
7-XXVI	Network configuration versions	51
7-XXVII	Pier patch panel connections for versions I and III network configurations, classes T, S, P nested ship support	52
7-XXVIII	Pier patch panel connections for versions I, III, and V network configurations, class B nested ship support	52
7-XXIX	Pier patch panel connections for version II network configuration, classes T, S, P nested ship support	54
7-XXX	Pier patch panel connections for version II network configuration, class B nested ship support	55
7-XXXI	Pier patch panel connections for version IV network configuration, classes T, S, P nested ship support	56
7-XXXII	Pier patch panel connections for version IV network configuration, class B nested ship support	57
7-XXXIII	Maximum shore cable lengths for pier configuration 1	59
7-XXXIV	Component assumptions in pier configuration 1	60
7-XXXV	Maximum shore cable lengths for pier configuration 2	60
7-XXXVI	Component assumptions in pier configuration 2	61
7-XXXVII	Maximum shore cable lengths for the Installation H configuration (with a hull pressure penetration and pier configuration 1)	61
7-XXXVIII	Component assumptions in Installation H configuration	62
7A1-I	Equipment and materials	7A1-1
7A1-II	Cable stripping dimensions	7A1-4
7A1-III	Equipment and material	7A1-17
7A1-IV	Termini type to be placed on each single fiber cable (except for Version IV	7A1-22
7A1-V	Termini type to be placed on each single fiber cable (Version IV)	7A1-23
7A1-VI	Cable stripping dimensions	7A1-24
7B1-I	Equipment and materials	7B1-1
7B1-II	Equipment and materials	7B1-4
7C1-I	Equipment and materials	7C1-1
7C1-II	Equipment and materials	7C1-3
7D1-I	Equipment and materials	7D1-1
7D1-II	Equipment and materials	7D1-5
7D1-III	Equipment and materials	7D1-8
7E1-I	Equipment and materials	7E1-2
7E1-II	Equipment and materials	7E1-2
7E1-III	Equipment and materials	7E1-4
7F1-I	Equipment and materials	7F1-1
7F1-II	Cable assembly loss measurement setup	7F1-6
7F1-III	Maximum acceptable loss for cable assembly	7F1-8
7F1-IV	Maximum component loss values	7F1-9
7G1-I	Equipment and materials	7G1-1
7I1-I	Equipment and materials	7I1-1

Source: https://assist.dla.mil -- Downloaded: 2016-12-10T08:13Z
Check the source to verify that this is the current version before use.

CONTENTS

TABLE		PAGE
7I1-II	Minimal acceptable return loss for one cable assembly	7I1-3
7J1-I	Equipment and materials	7J1-1
7J1-II	Test jumper loss acceptance criteria	7I1-3
7J1-III	Equipment and materials	7J1-6
7J1-IV	Acceptable reflectance range per connection interface	7J1-8

FIGURE		PAGE
7-1	Hermaphroditic cable plug	5
7-2	Hermaphroditic receptacle	5
7-3	Pierside cable construction	6
7-4	Pierside conductivity cable layout: pier-to-ship	6
7-5	Pigtail assembly	7
7-6	Umbilical assembly	8
7-7	Patch panel designation for ships radio room interconnection box	14
7-8	16 Port patch panel	15
7-9	Hermaphroditic connector pinout designations	36
7-10	Installation “A” shipboard layout	37
7-11	Installation “B” shipboard layout	37
7-12	Installation “C” shipboard layout	40
7-13	Installation “D” shipboard layout	40
7-14	Installation “E” shipboard layout	42
7-15	Installation “F” shipboard layout	42
7-16	Installation “G” shipboard layout	43
7-17	Installation “H” shipboard layout	43
7-18	Shipboard interconnection box mounting dimensions	44
7-19	Mounting dimensions for item 6003AK pier interconnection box	46
7-20	Mounting dimensions for item 6003AE pier interconnection box	47
7-21	Over-the-deck routing scheme	48
7-22	Through-the-ship routing scheme	49
7-23	Patch panel designations for item 6003AK pier interconnection box	50
7-24	Patch panel designations for item 6003AE pier interconnection box	50
7-25	Pier configurations	63
7-26	Nested ship configurations with number of connections	65
7-27	Submarine configurations with number of connections	67
7A1-1	Cable stripping dimensions	7A1-4
7A1-2	Mixing the epoxy	7A1-5
7A1-3	Injecting epoxy into the terminus.	7A1-6
7A1-4	Inserting the fiber into the terminus	7A1-7
7A1-5	Inserting a terminus in a cure adapter	7A1-7
7A1-6	Termini in the curing oven	7A1-8
7A1-7	Scoring the fiber	7A1-9
7A1-8	Placing the terminus in the insertion tool	7A1-9
7A1-9	Inserting the terminus in the polishing tool	7A1-10
7A1-10	Removing the terminus from the polishing tool	7A1-11
7A1-11	Scoring the fiber	7A1-12
7A1-12	Placing the terminus in the insertion tool	7A1-12
7A1-13	Inserting the terminus in the polishing tool	7A1-13
7A1-14	Removing the terminus from the polishing tool	7A1-14
7A1-15	Quality check	7A1-14
7A1-16	Installing the terminus in the connector.	7A1-15
7A1-17	Position for installing terminus in the connector	7A1-15
7A1-18	Removing the terminus from the connector insert	7A1-16
7A1-19	Cable plug components to slide onto cable	7A1-19
7A1-20	Strain relief assembly	7A1-20
7A1-21	Installing the O-ring.	7A1-20

Source: https://assist.dla.mil -- Downloaded: 2016-12-10T08:13Z
Check the source to verify that this is the current version before use.

CONTENTS

FIGURE		PAGE
7A1-22	Cable stripping dimensions	7A1-24
7A1-23	Mixing the epoxy.	7A1-25
7A1-24	Injecting epoxy into the terminus	7A1-26
7A1-25	Inserting the fiber into the terminus.	7A1-26
7A1-26	Inserting a terminus in a cure adapter	7A1-27
7A1-27	Termini in the curing oven	7A1-27
7A1-28	Scoring the fiber	7A1-28
7A1-29	Placing the terminus in the insertion tool.	7A1-29
7A1-30	Inserting the terminus in the polishing tool	7A1-29
7A1-31	Removing the terminus from the polishing tool	7A1-30
7A1-32	Scoring the fiber.	7A1-31
7A1-33	Placing the terminus in the insertion tool	7A1-31
7A1-34	Inserting the terminus in the polishing tool	7A1-32
7A1-35	Removing the terminus from the polishing tool.	7A1-33
7A1-36	Quality check	7A1-33
7A1-37	Installing the spacing shafts of the plug insert	7A1-34
7A1-38	Installing the terminus using insertion tool	7A1-34
7A1-39	Cable plug final assembly	7A1-35
7A1-40	Removing the terminus from the insert	7A1-36
7B1-1	Installation “A”, “C”, “D”, “E”, “G”, and “H” Kit D hole orientation.	7B1-2
7B1-2	Installation “B” Kit D hole orientation	7B1-2
7B1-3	Single fiber cable routing inside interconnection box.	7B1-3
7C1-1	Support grips on umbilical assembly	7C1-2
7D1-1	Hand cranked spooling device	7D1-2
7D1-2	Electrical tie down straps on umbilical assembly	7D1-2
7D1-3	Mating hermaphroditic connectors and dust covers.	7D1-4
7F1-1	Cable assembly measurement: cable plug-to-cable plug configuration	7F1-3
7F1-2	Cable assembly measurement: receptacle-to-ST configuration	7F1-3
7F1-3	Cable assembly measurement: socket termini-to-pin termini configuration	7F1-4
7F1-4	Cable assembly measurement: socket termini-to-ST configuration	7F1-4
7F1-5	Cable assembly measurement: pin termini-to-ST configuration.	7F1-5
7F1-6	Cable assembly measurement: ST-to-ST configuration	7F1-5
7G1-1	D hole orientation.	7G1-3
7H1-1	Hermaphroditic connector mating.	7H1-1
7H1-2	Threading a plug onto a receptacle.	7H1-2
7H1-3	Threading a plug onto a plug.	7H1-2
7H1-4	Unthreading a cable plug from a receptacle.	7H1-3
7H1-5	Disengaging a cable plug from a receptacle.	7H1-3
7I1-1	Return loss measurement: cable plug-to-cable plug configuration (example: umbilical assembly)	7I1-4
7I1-2	Return loss measurement: cable plug-to-ST configuration (example: pigtail assembly)	7I1-5
7I1-3	Return loss measurement: Socket termini-to-pin termini configuration (example: port-to-starboard cable assembly)	7I1-6
7I1-4	Return loss measurement: ST-to-pin termini configuration (example: port-to-radio room and starboard-to-radio room cable assemblies)	7I1-7
7I1-5	Return loss measurement: ST-to-socket termini configuration (example: port-to-radio room and starboard-to-radio room cable assemblies)	7I1-8
7J1-1	Optical loss MQJ acceptance test: ST connector end (example: candidate hermaphroditic MQJ)	7J1-4
7J1-2	Optical loss MQJ acceptance test: cable plug end (example: candidate hermaphroditic MQJ))	7J1-5
7J1-3	Reflectance measurement: ST connector interface (example: candidate hermaphroditic MQJ)	7J1-9
7J1-4	Reflectance measurement: cable plug interface (example: candidate hermaphroditic MQJ)	7J1-10

Source: https://assist.dla.mil -- Downloaded: 2016-12-10T08:13Z
Check the source to verify that this is the current version before use.

1. SCOPE

1.1 Scope. This standard practice provides detailed methods for installing pierside connectivity fiber optic cable assemblies and interconnection hardware.

1.1.1 Applicability. These criteria apply to installations on specific ships when invoked by the governing ship/pier specification or other contractual document. They are intended primarily for new construction; however, they are also applicable for conversion or alteration of existing ships/piers. The rapidly changing state of the art in fiber optic technology makes it essential that some degree of flexibility be exercised in enforcing this document. Where there is a conflict between this document and the ship/pier specification or contract, the ship/pier specification or contract takes precedence. Where ship design is such that the methods herein cannot be implemented, users should submit new methods or modifications of existing methods for approval prior to implementation to: Department of the Navy, Naval Surface Warfare Center, Dahlgren Division, ATTN: Code B35, 17320 Dahlgren Road, Dahlgren, VA 22448-5100. Similarly, users on pier designs should submit new methods or modifications of existing methods to SPAWARSYSCOM PMW-158.

Source: https://assist.dla.mil -- Downloaded: 2016-12-10T08:13Z
Check the source to verify that this is the current version before use.

2. APPLICABLE DOCUMENTS

2.1 General. The documents listed in this section are specified in sections 3, 4 and 5 of this standard. This section does not include documents cited in other sections of this standard or recommended for additional information or as examples. While every effort has been made to ensure the completeness of this list, document users are cautioned that they must meet all specified requirements documents cited in sections 3, 4 and 5 of this standard, whether or not they are listed.

2.2 Government documents.

2.2.1 Specifications, standards and handbooks. The following specifications, standards and handbooks form a part of this document to the extent specified herein. Unless otherwise specified, the issues of these documents are those listed in the Department of Defense Index of Specifications and Standards (DODISS) and supplements thereto, cited in the solicitation (see 6.2).

DEPARTMENT OF DEFENSE SPECIFICATIONS

MIL-I-24728 - Interconnection Box, Fiber Optic, Metric, General Specification for.

MIL-PRF-24792 - Adhesive, Epoxy, Two Part, Fiber Optics.

MIL-C-83522 - Connectors, Fiber Optic, Single Terminus, General Specification for.

MIL-PRF-85045 - Cables, Fiber Optic,(Metric) General Specification for.

DEPARTMENT OF DEFENSE STANDARDS

MIL-STD-2042-1 - Fiber Optic Cable Topology Installation, Standard Methods for Naval Ships (Cables)(Part 1 of 7 Parts).

MIL-STD-2042-2 - Fiber Optic Cable Topology Installation, Standard Methods for Naval Ships (Equipment)(Part 2 of 7 Parts).

MIL-STD-2042-6 - Fiber Optic Topology Installation, Standard Methods for Naval Ships (Tests)(Part 6 of 7 Parts).

(Unless otherwise indicated, copies of the above specifications, standards, and handbooks are available from the Standardization Documents Order Desk, 700 Robbins Ave, Building 4D, Philadelphia, PA, 19111-5094.)

2.2.2 Other Government documents. The following other Government documents form a part of this document to the extent specified herein. Unless otherwise specified, the issues are those cited in the solicitation.

DEPARTMENT OF DEFENSE DRAWINGS

NAVSEA Drawing - 6872811 Tool Kit, MIL-C-83522, Fiber Optic, Navy Shipboard.

- 6872813 Tool Kit, MIL-C-28876, Fiber Optic, Navy Shipboard.

- 7085185 Tool Kit, Fiber Optic, Navy Submarine

- 7325759 Pierside Connectivity, Umbilical Assembly, Fiber Optic, Ship-To-Pier

Source: https://assist.dla.mil -- Downloaded: 2016-12-10T08:13Z
Check the source to verify that this is the current version before use.

DEPARTMENT OF DEFENSE DRAWINGS (continued)

NAVSEA Drawing - 7325760 Pierside Connectivity, Pigtail Assembly, Fiber Optic, Jam Nut Mounted Receptacle (Hermaphroditic) To ST connector

- 7325761 Pierside Connectivity, Pier Kit, Fiber Optic, Pier Interface To Ship

- 7325762 Pierside Connectivity, Ship Kit, Fiber Optic, Ship Interface To Pier

- 7325763 Pierside Connectivity, Termination Support Kit, For Fiber Optic ST Connector and Termini

- 7379171 Fiber Optic Connectors, Hermaphroditic, Multiple Removable Termini

- 7379172 Removable Termini For Multiple Termini Fiber Optic Connectors

- 7379173 Cable, Fiber Optic, Pierside Use Only (Not For Inboard Or Outboard Use), 12 Breakout Cable Count, Multiple Classes (Single Mode, Multimode, Fiber-Hybrid)

(Copies of documents should be obtained from the contracting activity or as directed by the contracting officer.)

2.3 Non-Government publications. The following documents form a part of this document to the extent specified herein. Unless otherwise specified, the issues of the documents which are DOD adopted are those listed in the issue of the DODISS cited in the solicitation. Unless otherwise specified, the issues of documents not listed in the DODISS are the issues of the documents cited in the solicitation (see 6.2).

AMERICAN NATIONAL STANDARDS INSTITUTE (ANSI)

ANSI Z136.2 - Safe Use of Optical Fiber Communication Systems Utilizing Laser Diode and LED Sources

(Application for copies should be addressed to the American National Standards Institute, 1430 Broadway, New York, NY 10018-3308.)

ELECTRONICS INDUSTRY ASSOCIATION/TELECOMMUNICATIONS INDUSTRY ASSOCIATION

EIA/TIA-440 - Fiber Optic Terminology.

(Application for copies should be addressed to Global Engineering Documents, 1990 M Street NW, Suite 400, Washington, DC 20036.)

2.4 Order of precedence. In the event of a conflict between the text of this document and the references cited herein, the text of this document takes precedence. Nothing in this document, however, supersedes applicable laws and regulations unless a specific exemption has been obtained.

Source: https://assist.dla.mil -- Downloaded: 2016-12-10T08:13Z
Check the source to verify that this is the current version before use.

3. DEFINITIONS

3.1 General fiber optics terms. Definitions for general fiber optics terms used in this standard practice are in accordance with EIA/TIA-440. Definitions for other terms as they are used in this standard practice are given in the following paragraphs.

3.2 Alignment sleeve, cavity fixed. The cylindrical tube mounted within the detachable socket insert that positions the fiber protruding from the socket terminus fiber with that of the pin terminus.

3.3 Alignment sleeve, terminus fixed. The cylindrical tube mounted onto the socket terminus that positions the fiber protruding from the socket terminus fiber with that of the pin terminus.

3.4 Authorized approval. Authorized approval is written approval from the cognizant Government activity.

3.5 Cable assembly. A portion of the fiber optic cable plant that consists of the fiber optic or other passive device terminated with connectors on each end. An optical loss test in accordance with Method 6C1 of MIL-STD-2042 is performed on a cable assembly.

3.6 Communication link. The transmitter, receiver and interconnecting fiber optic cable assemblies. The most basic link is a point-to-point link, which consists of a transmitter, receiver and interconnecting optical fiber (one cable link). All communication systems can be broken down into sets of point-to-point fiber optic communication links.

3.7 Composite cables. Cables that contain both optical fibers and metallic conductors intended for communications use.

3.8 Cross connect assembly. A cable “adapter” used when a nested ship is facing the opposite direction as the other ship(s) moored at that berth. The cable corrects the pinout configuration to that of ships nested in the same direction.

3.9 Detachable socket insert. A front, removable portion of the connector insert or front surface that allows easy access for cleaning of the socket terminus, ferrule end face.

3.10 End-to-end cable link. Two or more fiber optic cable assemblies comprising the optical path to carry optical data streams from one point (such as an interconnection box) to another.

3.11 End user equipment. End user equipment refers to any cabinet, case, panel, or device; that contains components that are either the origin or destination of an optical signal.

3.12 Hermaphroditic connector. A hermaphroditic connector is a connector in which cable plugs are able to mate with one another. The term hermaphroditic connector is used in this standard when referring to either/both the hermaphroditic cable plug and hermaphroditic receptacle.

3.13 Hermaphroditic cable plug. The cable plug is the component that mates with a hermaphroditic receptacle when the cable plug is in the forward position. Being hermaphroditic, the cable plug (see figure 7-1) also is used to concatenate umbilical assemblies when one cable plug is in the forward position (female threads exposed) and the mating cable plug is in the back position (male threads exposed). The hermaphroditic style connector is intended for use in concatenation as opposed to point-to-point applications.

Source: https://assist.dla.mil -- Downloaded: 2016-12-10T08:13Z
Check the source to verify that this is the current version before use.

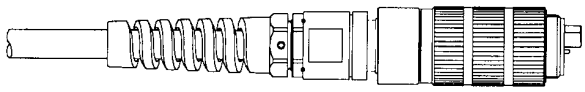

Hermaphroditic Cable Plug in Back Position

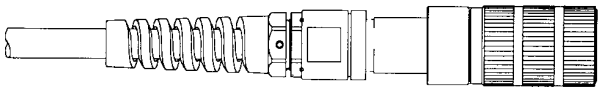

Hermaphroditic Cable Plug in Forward Position

FIGURE 7-1. Hermaphroditic cable plug.

3.14 Hermaphroditic receptacle. The hermaphroditic receptacle (see figure 7-2) is used at the interconnection box or panel, and is designed to mate with a cable plug in the forward position. The hermaphroditic receptacle itself is not hermaphroditic, but is compatible for mating with the hermaphroditic cable plug.

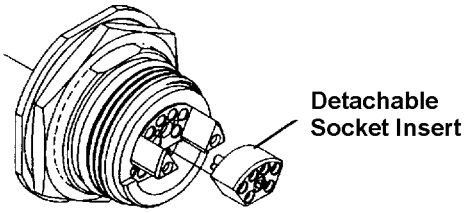

FIGURE 7-2. Hermaphroditic receptacle.

3.15 Hybrid cables. Cables that contain more than one size and/or type of optical fiber.

3.16 Installing activity. An installing activity is any military, commercial, or industrial organization involved with the installation of fiber optic cables and connections aboard Naval ships or at Navy piers.

3.17 Interconnection hardware. The fiber optic components found at the ends of cable assemblies that mechanically seals, protects or positions and/or that optically aligns the connections at the ends of the cable assemblies. Interconnection hardware include interconnection boxes, patch panels, cabinets, stuffing tubes and ST-to-ST adapters.

3.18 Loss budget. The allocation of optical losses within a fiber optic communications link. These losses include component losses (cables, connectors, etc.), optical power penalties and other performance degradations (such as environmental losses), and an optical margin for unforeseen or unpredictable changes within the communications link.

3.19 Measurement Quality Jumper (MQJ). A low loss cable link or “test jumper” used as part of an optical test measurement. Use of an MQJ ensures that an installed cable link being tested that has a marginal or unacceptable optical attenuation/reflectance value will not be masked by a poor optical quality (high attenuation or reflectance) test jumper.

Source: https://assist.dla.mil -- Downloaded: 2016-12-10T08:13Z
Check the source to verify that this is the current version before use.

3.20 Optical fiber cable component (OFCC). An OFCC is a buffered fiber augmented with a concentric layer of strength members and an overall jacket. See single-fiber cable.

3.21 Optical Return Loss (ORL). The accumulative portions of the optical power at each connection interface and the back scatter that is reflected back towards the optical source. This accumulative, returned optical power, measured from the transmission equipment, is performed at the system level to verify that the assemblage of cable links is acceptable. The ORL is the opposite of the reflected optical gain (loss is opposite of gain) and is calculated as a positive value.

3.22 Pierside cable. A fiber optic cable comprised of 12 single-fiber cables under a double layer, polyurethane outer jacket. This multi-fiber cable (see figure 7-3) is a hybrid cable containing 8 multimode fibers and 4 single mode fibers. When part of the umbilical assembly, this cable is referred to as umbilical assembly cable.

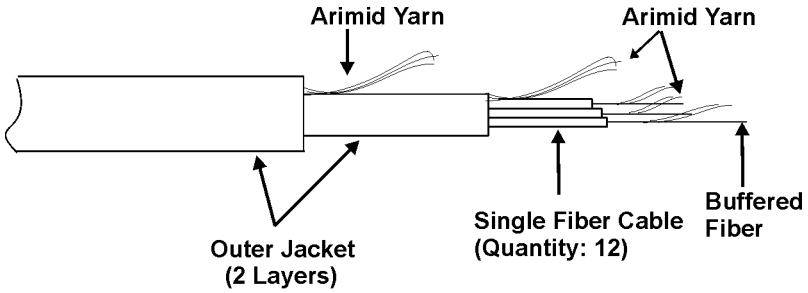

FIGURE 7-3. Pierside cable construction.

3.23 Pierside connectivity fiber optic cable assemblies and interconnection hardware. The fiber optic cables, connectors, interconnection boxes and patch panels, and other passive components that comprise the optical path to carry optical data streams from/to the interconnection box at the pier to/from the radio room onboard the ship (see figure 7-4).

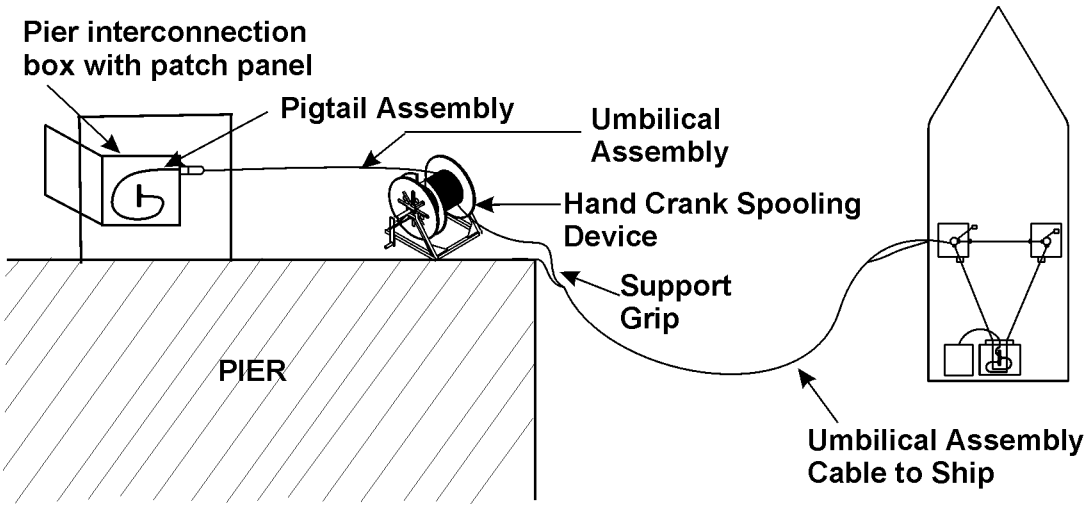

FIGURE 7-4. Pierside connectivity cable layout: pier-to-ship.

Source: https://assist.dla.mil -- Downloaded: 2016-12-10T08:13Z
Check the source to verify that this is the current version before use.

3.24 Pigtail assembly (see figure 7-5). A cable link found inside the pier interconnection box that interfaces with the pier-to-ship umbilical assembly. This cable link has a hermaphroditic receptacle at one end and ST connectors at the other end. The hermaphroditic receptacle mates with the umbilical assembly. The ST connectors allow patching, when required, at the pier interconnection box.

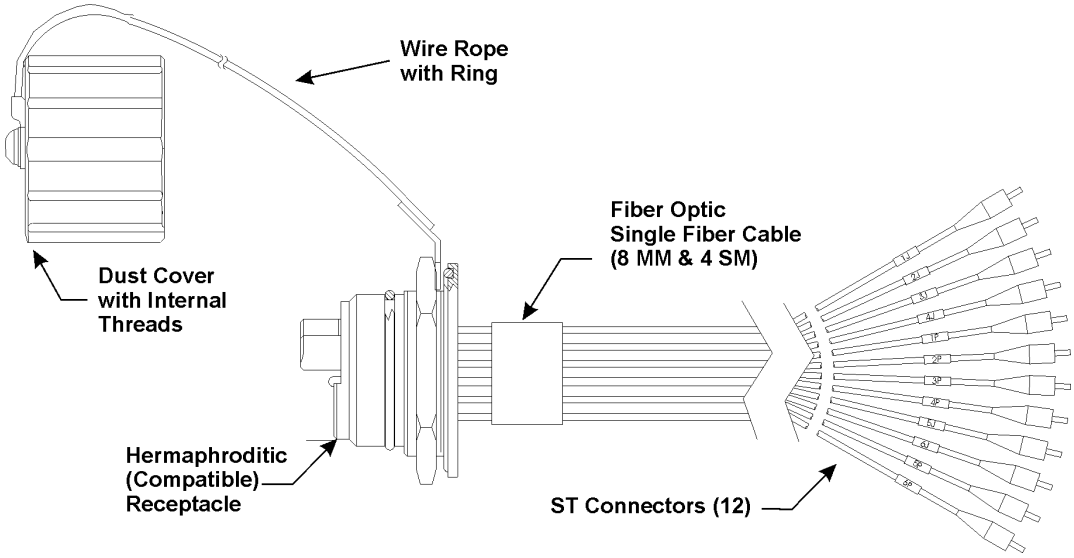

FIGURE 7-5. Pigtail Assembly.

3.25 Reflectance. The portion of the optical power at one connection interface that is reflected back towards the optical source. This returned optical power at each connection interface is used to determine if the reflectance of each connector is acceptable. Reflectance is the optical gain in a direction opposite that of the forward signal and is measured as a negative value.

3.26 Single-fiber cable. A buffered fiber augmented with a concentric layer of strength members and an overall jacket. Also, the individual single-fiber cables inside the outer jacket of a multiple fiber cable.

3.27 Termination. The process of placing a fiber optic connector on the end(s) of a fiber optic cable. This process also may be referred to as connector installation, fabrication or assembly.

3.28 Umbilical assembly . The detachable, not permanently installed, cable link used to provide a fiber optic connection between the pier and the ship(s). The umbilical assembly (see figure 7-6) consists of a 152 meter, fiber optic cable with a hermaphroditic connector (cable plug) on each end and spooled onto a three flanged cable reel.

Source: https://assist.dla.mil -- Downloaded: 2016-12-10T08:13Z
Check the source to verify that this is the current version before use.

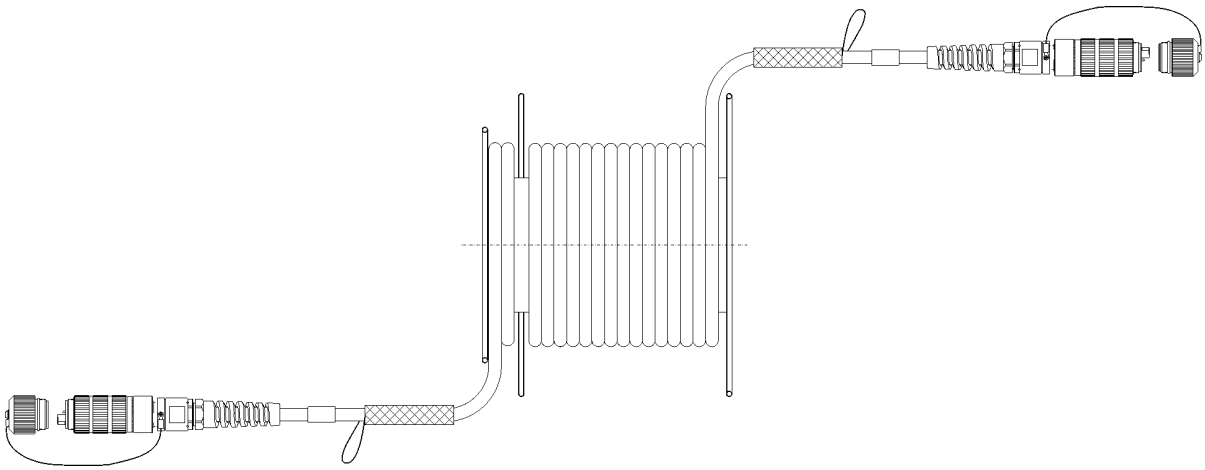

FIGURE 7-6. Umbilical Assembly.

Source: https://assist.dla.mil -- Downloaded: 2016-12-10T08:13Z
Check the source to verify that this is the current version before use.

4. GENERAL REQUIREMENTS

4.1 Fiber optic cable connection. Fiber optic connectors shall be used on the ends of the pierside connectivity cable assemblies (see 3.5) for connections between cable assemblies.

4.1.1 Connection component selection. The connection components shall be those referenced in ship/pier specifications and drawings. In those instances where the installing activity (see 3.16) is responsible for determining the correct components, they shall be selected in accordance with 4.2 and 4.3.

4.2 Fiber connectors. Fiber optic connectors shall be as follows:

a. Shipboard single terminus (light duty) connectors in accordance with MIL-C-83522/16 shall be used to interconnect two optical fiber cable components (OFCCs) inside an interconnection box or equipment. ST connectors used at the pier shall be in accordance with NAVSEA DWG 7325760.

b. Hermaphroditic, multiple terminus (heavy duty) connectors in accordance with NAVSEA DWG 7379171 shall be used to interconnect the umbilical assembly to both the pier and the ship.

4.2.1 Installation. Connectors shall be installed on cables in accordance with the methods herein and as follows:

a. The connector pinout of each hermaphroditic cable plug or receptacle shall be as specified herein or in accordance with the approved drawings.

b. Where a hermaphroditic connector is installed on the end of a cable, every terminus position shall contain an optical terminus in accordance with NAVSEA DWG 7379172.

c. Hermaphroditic receptacles shall be used at the interconnection boxes aboard ships. Pigtail assemblies in accordance with NAVSEA DWG 7325760 shall be used at the pier interconnection box.

4.3 Fiber optic splices. Fiber optic splices shall not be used during initial installation for pierside connectivity connections.

4.4 Tests. Following installation, testing of all components of the pierside connectivity cable assemblies shall be in accordance with Parts 7F and 7I of this standard practice.

4.5 Safety precautions. The following safety precautions apply:

a. Observe all written safety precautions given in the methods of this standard practice.

b. Observe all warning signs on equipment and materials.

c. The classification of a laser is based on the ability of the optical beam to cause damage to the eye. Under normal operating conditions, an optical fiber communication system (OFCS) is inherently an eye safe system; but, when an optical fiber connection is broken and optical viewing instruments are used, it is possible that hazardous energy can enter the eye. For this reason four service group hazard classes have been devised to indicate the degree of hazard and required hazard control measures. Refer to ANSI Z136.2 for a full technical definition. The following laser safety precautions shall apply:

(1) Ensure personnel are familiar with the laser degree of hazard and the required control measures.

Source: https://assist.dla.mil -- Downloaded: 2016-12-10T08:13Z
Check the source to verify that this is the current version before use.

(2) Light generated by light emitting diodes (LED's) and laser diodes may not be visible but may still be hazardous to the unprotected eye. Never stare into the end of an optical fiber connected to an LED or laser diode and do not stare into broken, severed or disconnected optical cables.

(3) Do not view the primary beam or a specular reflection from an OFCS with an optical microscope, eye loupe or other viewing instrument. The instrument may create a hazard due to its light gathering capability.

d. Safety glasses shall be worn when handling bare fibers. Always handle cable carefully to avoid personal injury. The ends of optical fibers may be extremely sharp and can lacerate or penetrate the skin or cause permanent eye damage if touched to the eye. If the fiber penetrates the skin, it most likely will break off, in which case the extraction of the fiber should be performed by trained medical personnel to prevent further complications.

e. Wash hands after handling bare fibers or performing fiber terminations.

f. Do not eat or drink in the vicinity of bare optical fibers. Ingested optical fibers may cause serious internal damage.

Source: https://assist.dla.mil -- Downloaded: 2016-12-10T08:13Z
Check the source to verify that this is the current version before use.

5. DETAILED REQUIREMENTS

5.1 Hermaphroditic connector installation. Installation of the NAVSEA DWG 7379171 hermaphroditic connector on fiber optic cable shall be in accordance with Method 7A1.

5.1.1 Termini on shipboard cable OFCC ends. Method 7A1-1 shall be used to install the connector and place termini on the ends of shipboard cable OFCCs.

5.1.2 Pigtail assembly. Method 7A1-1 shall be used to place termini on the ends of pigtail assemblies.

5.1.3 Umbilical assembly. Method 7A1-2 shall be used to install the hermaphroditic cable plug onto each end of the umbilical assembly. The hermaphroditic connector pinout for the umbilical assembly shall be as shown in Method 7A1.

5.2 Light duty connector installation. Light duty connectors in accordance with MIL-C-83522/16 (for shipboard installations) or NAVSEA DWG 7325760 (for pier interconnection box installations) shall be installed on fibers in accordance with Method 5B1.

5.3 Shipboard connector pinout and patching positions (wiring diagram).

5.3.1 Configurations. The fibers to be placed into the hermaphroditic receptacle in the interconnection boxes and the patch panel configuration in the radio room will depend on the network configuration installed on the ship. Three present ship network configurations are specified: AN/USQ-144B(V)2, AN/USQ-144C(V)2 and AN/USQ-144D(V)2. A future, ship network configuration is specified as the fourth configuration. A variance for the submarine configuration is specified as the fifth configuration. Table 7-I further subdivides these network configurations (versions) by class (type/level of nested ship support), ship class and fiber type. This subdivision is used to identify the pinout, patching positions and cable designations for the shipboard interconnection box(es) with the compatible hermaphroditic receptacle(s) to the mating umbilical assembly. These pinouts, etc. are shown in tables 7-II through 7-XXI.

TABLE 7-I. Network configuration versions.

Version	Class	Network Configuration Designation	Ship Classes	Fiber Type	Pinout Table
I	T	AN/USQ-144B(V)2	AOE,LPD,LSD,AGF,FFG,DDG, DD,CG,MCM,MHC	multimode single mode	7-II 7-III
I	S	AN/USQ-144B(V)2	CV,CVN	multimode single mode	7-IV 7-V
I	P	AN/USQ-144B(V)2	LHA,LHD,LCC	multimode single mode	7-VI 7-VII
II	T	AN/USQ-144C(V)2	AOE,LPD,LSD,AGF,FFG,DDG, DD,CG,MCM,MHC	multimode single mode	7-VIII 7-IX
II	S	AN/USQ-144C(V)2	CV,CVN	multimode single mode	7-X 7-XI
II	P	AN/USQ-144C(V)2	LHA,LHD,LCC	multimode single mode	7-XII 7-XIII
III	T	AN/USQ-144D(V)2	AOE,LPD,LSD,AGF,FFG,DDG, DD,CG, MCM,MHC	multimode single mode	7-XIV 7-XV
III	P	AN/USQ-144D(V)2	LHA,LHD,LCC	multimode single mode	7-XVI 7-XVII
IV	T	Future	To Be Determined	multimode single mode	7-XVIII 7-XIX
V	B	AN/USQ-144A(V)3	SSN,SSBN	multimode single mode	7-XX 7-XXI

NOTE: The umbilical assembly for Version IV must be configured with a cable containing 6 multimode and 6 single mode optical fibers.

Source: https://assist.dla.mil -- Downloaded: 2016-12-10T08:13Z
Check the source to verify that this is the current version before use.

5.3.1.1 Class T. Fiber optic cable topology supports the through-the-ship umbilical assembly routing scheme for nested ships (see 5.6.1). Either two interconnection boxes with compatible receptacles for umbilical assembly mating are located mid-ship, one port and one starboard, or one interconnection box with compatible receptacles is located mid-ship, depending on the size of the ship (see figure 7-10 and 7-11). For the one interconnection box configuration, one receptacle on the box is allocated for port connections and one is allocated for starboard connections.

5.3.1.2 Class S. Fiber optic topology does not support the through-the-ship umbilical assembly routing scheme. No nesting is intended for these ship classes. Interconnection boxes with compatible receptacles for umbilical assembly mating are located forward and aft on the starboard side of the ship.

5.3.1.3 Class P. Fiber optic topology does not support the through-the-ship umbilical assembly routing scheme. No nesting is intended for these ship classes. Interconnection boxes with compatible receptacles for umbilical assembly mating are located mid-ship on the port and starboard sides of the ship.

5.3.1.4 Class B. Fiber optic topology does not support the through-the-ship umbilical assembly routing scheme. Nesting of boats is supported only if the over-the-deck umbilical assembly routing scheme is used. Additionally, the interconnection box at the pier must contain a compatible receptacle for the umbilical assembly of each boat in the nest. One interconnection box with a compatible receptacle for umbilical assembly mating is located on each boat.

5.3.2 Fiber designations. Fiber designations for each shipboard multimode and single mode cable are listed in tables 7-II through 7-XXI.

5.3.3 Radio room patch panel layout (see figure 7-7 and figure 7-8).

5.3.3.1 Version I, Class T and P; Version II, Class T; Version III, Class T and P; Version IV, Class T (see figure 7-7). Ports 41, 48, 89 and 96 should be labeled TX or transmit, ports 42, 47, 90 and 95 should be labeled RX or receive. The patch cord from the shipboard network is to be placed either in 89 and 90 if the starboard side of the ship is facing the pier or in 95 and 96 if the port side of the ship is facing the pier. Patch panel layout is as follows:

a. Top four rows – starboard interconnection box cables.

b. Bottom four rows – port interconnection box cables.

c. Top two rows (starting with ports 41 and 42) – multimode cable from the starboard interconnection box.

d. Next two rows from the top (starting with ports 43 and 44) – single mode cable from the starboard interconnection box.

e. Bottom two rows (starting with ports 47 and 48) – multimode cable from the port interconnection box.

f. Next two rows from the bottom (starting with ports 45 and 46) – single mode cable from the port interconnection box.

NOTE: Rows 5 through 8 are a mirror image of rows 1 through 4.

Source: https://assist.dla.mil -- Downloaded: 2016-12-10T08:13Z
Check the source to verify that this is the current version before use.

5.3.3.2 Version I, class S (see figure 7-7). Ports 41, 48, 89 and 96 should be labeled TX or transmit, ports 42, 47, 90 and 95 should be labeled RX or receive. The patch cord from the shipboard network is to be placed either in 89 and 90 or in 95 and 96, depending on which side of the ship is expected to face the pier. Patch panel layout is as follows:

a. Top four rows – starboard interconnection box 2 cables.

b. Bottom four rows – starboard interconnection box 1 cables.

c. Top two rows (starting with ports 41 and 42) – multimode cable from the starboard interconnection box 2.

d. Next two rows from the top (starting with ports 43 and 44) – single mode cable from the starboard interconnection box 2.

e. Bottom two rows (starting with ports 47 and 48) – multimode cable from the starboard interconnection box 1.

f. Next two rows from the bottom (starting with ports 45 and 46) – single mode cable from the starboard interconnection box 1.

5.3.3.3 Version II, class S (see figure 7-7). Ports 17, 24, 65, and 72 should be labeled TX or transmit, ports 18, 23, 66, and 71 should be labeled RX or receive. The patch cord from the shipboard network is to be placed either in 65 and 66 or in 71 and 72, depending on which side of the ship is expected to face the pier. Patch panel layout is as follows:

a. Top four rows – starboard interconnection box 2 cables.

b. Bottom four rows – starboard interconnection box 1 cables.

c. Top two rows (starting with ports 41 and 42) – multimode cable from the starboard interconnection box 2.

d. Next two rows from the top (starting with ports 43 and 44) – single mode cable from the starboard interconnection box 2.

e. Bottom two rows (starting with ports 47 and 48) – multimode cable from the starboard interconnection box 1.

f. Next two rows from the bottom (starting with ports 45 and 46) – single mode cable from the starboard interconnection box 1.

5.3.3.4 Version II, class P (see figure 7-7). Ports 17, 24, 65, and 72 should be labeled TX or transmit, ports 18, 23, 66, and 71 should be labeled RX or receive. The patch cord from the shipboard network is to be placed either in 65 and 66 if the starboard side of the ship is facing the pier or in 71 and 72 if the port side of the ship is facing the pier. Patch panel layout is as follows:

a. Top four rows – starboard interconnection box cables.

b. Bottom four rows – port interconnection box cables.

c. Top two rows (starting with ports 41 and 42) – multimode cable from the starboard interconnection box.

d. Next two rows from the top (starting with ports 43 and 44) – single mode cable from the starboard interconnection box.

e. Bottom two rows (starting with ports 47 and 48) – multimode cable from the port interconnection box.

Source: https://assist.dla.mil -- Downloaded: 2016-12-10T08:13Z
Check the source to verify that this is the current version before use.

f. Next two rows from the bottom (starting with ports 45 and 46) – single mode cable from the port interconnection box.

5.3.3.5 Version V, class B (see figure 7-8). Ports 16 and 32 should be labeled TX or transmit, ports 12 and 28 should be labeled RX or receive. The patch cord from the shipboard network is to be placed 28 and 32. Patch panel layout is as follows:

a. Top two rows (starting with ports 4 and 8) – single mode cable from the hatch interconnection box.

b. Bottom two rows (starting with ports 12 and 16) – multimode cable from the hatch interconnection box.

NOTE: Numbering sequence is by columns on the 48 port patch panel (i.e., ports in column 1 are numbered 1 through 8, those in column 2 are 9 through 16, etc.). Numbering sequence is by rows on the 16 port patch panel (i.e., ports in row 1 are numbered 1 through 4, those in row 2 are 5 through 8, etc.). See figure 7-8.

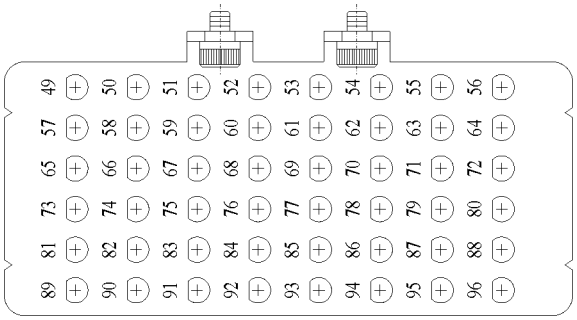

View from right side

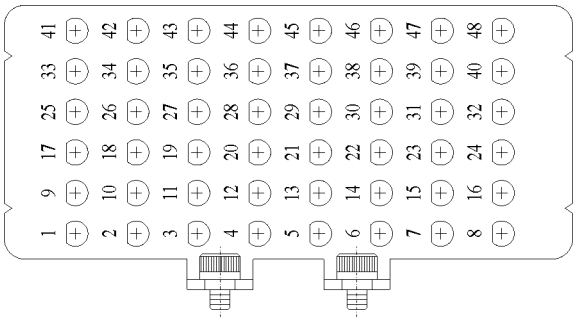

View from left side

FIGURE 7-7. Patch panel designation for ships radio room interconnection box.

Source: https://assist.dla.mil -- Downloaded: 2016-12-10T08:13Z
Check the source to verify that this is the current version before use.

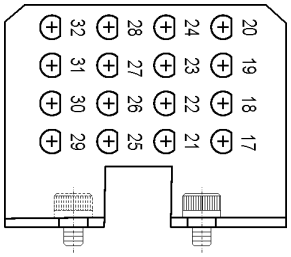

View from right side

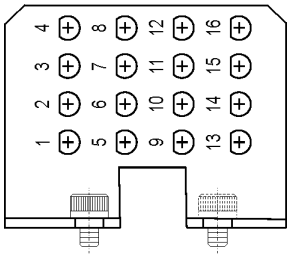

View from left side

FIGURE 7-8. 16 port patch panel.

5.3.4 Hermaphroditic connector pinout designations. The pinout locations, looking into the connector are shown in figure 7-9.

a. The number identifies the pin or socket location number.

b. J identifies the location as a socket (jack) location.

c. P identifies the location as a pin location.

NOTE: The following abbreviations are used in tables 7-II through 7-XXI:

Port-1J =	port interconnection box hermaphroditic receptacle position 1J.
STBD-3P =	starboard interconnection box hermaphroditic receptacle position 3P.
N/C =	terminated, but not connected.
P/P =	patch panel in ships' radio room interconnection box.
P/P-46 =	ST-to-ST adapter port position 46 on the patch panel.

Source: https://assist.dla.mil -- Downloaded: 2016-12-10T08:13Z
Check the source to verify that this is the current version before use.

TABLE 7-II. Multimode cable connections for version I, class T network configuration (see figures 7-10 and 7-11).

Unit A Term. No.	Unit B Term. No.	CABLE TYPE & Number		COLOR CODE	Function	Fiber Designation
Port-1J	P/P-48	MULTIMODE	FO-PIER-1-M	Blue	TX (PORT)	FO-PIER-1-M-101
Port-1P	P/P-47	MULTIMODE	FO-PIER-1-M	Orange	RX (PORT)	FO-PIER-1-M-102
Port-N/C	P/P-40	MULTIMODE	FO-PIER-1-M	Green	SPARE	FO-PIER-1-M-103
Port-N/C	P/P-39	MULTIMODE	FO-PIER-1-M	Brown	SPARE	FO-PIER-1-M-104
Port-N/C	P/P-32	MULTIMODE	FO-PIER-1-M	Gray	SPARE	FO-PIER-1-M-105
Port-N/C	P/P-31	MULTIMODE	FO-PIER-1-M	White	SPARE	FO-PIER-1-M-106
Port-N/C	P/P-24	MULTIMODE	FO-PIER-1-M	Red	SPARE	FO-PIER-1-M-107
Port-N/C	P/P-23	MULTIMODE	FO-PIER-1-M	Black	SPARE	FO-PIER-1-M-108
STBD-3P	P/P-41	MULTIMODE	FO-PIER-3-M	Blue	TX (STBD)	FO-PIER-3-M-101
STBD-3J	P/P-42	MULTIMODE	FO-PIER-3-M	Orange	RX (STBD)	FO-PIER-3-M-102
STBD-N/C	P/P-33	MULTIMODE	FO-PIER-3-M	Green	SPARE	FO-PIER-3-M-103
STBD-N/C	P/P-34	MULTIMODE	FO-PIER-3-M	Brown	SPARE	FO-PIER-3-M-104
STBD-N/C	P/P-25	MULTIMODE	FO-PIER-3-M	Gray	SPARE	FO-PIER-3-M-105
STBD-N/C	P/P-26	MULTIMODE	FO-PIER-3-M	White	SPARE	FO-PIER-3-M-106
STBD-N/C	P/P-17	MULTIMODE	FO-PIER-3-M	Red	SPARE	FO-PIER-3-M-107
STBD-N/C	P/P-18	MULTIMODE	FO-PIER-3-M	Black	SPARE	FO-PIER-3-M-108
Port-2J	STBD-1P	MULTIMODE	FO-PIER-5-M	Blue	Pass Thru	FO-PIER-5-M-101
Port-2P	STBD-1J	MULTIMODE	FO-PIER-5-M	Orange	Pass Thru	FO-PIER-5-M-102
Port-3J	STBD-2P	MULTIMODE	FO-PIER-5-M	Green	Pass Thru	FO-PIER-5-M-103
Port-3P	STBD-2J	MULTIMODE	FO-PIER-5-M	Brown	Pass Thru	FO-PIER-5-M-104
Port-4J	STBD-4P	MULTIMODE	FO-PIER-5-M	Gray	Pass Thru	FO-PIER-5-M-105
Port-4P	STBD-4J	MULTIMODE	FO-PIER-5-M	White	Pass Thru	FO-PIER-5-M-106
Port-N/C	STBD-N/C	MULTIMODE	FO-PIER-5-M	Red	SPARE	FO-PIER-5-M-107
Port-N/C	STBD-N/C	MULTIMODE	FO-PIER-5-M	Black	SPARE	FO-PIER-5-M-108

Source: https://assist.dla.mil -- Downloaded: 2016-12-10T08:13Z
Check the source to verify that this is the current version before use.

TABLE 7-III. Single mode cable connections for version I, class T network configuration (see figures 7-10 and 7-11).

Unit A Term. No.	Unit B Term. No.	CABLE TYPE & Number		COLOR CODE	Function	Fiber Designation
Port-5J	P/P-46	SINGLE MODE	FO-PIER-2-S	Blue	TX (PORT)	FO-PIER-2-S-101
Port-5P	P/P-45	SINGLE MODE	FO-PIER-2-S	Orange	RX (PORT)	FO-PIER-2-S-102
Port-6J	P/P-38	SINGLE MODE	FO-PIER-2-S	Green	SPARE	FO-PIER-2-S-103
Port-6P	P/P-37	SINGLE MODE	FO-PIER-2-S	Brown	SPARE	FO-PIER-2-S-104
Port-N/C	P/P-30	SINGLE MODE	FO-PIER-2-S	Gray	SPARE	FO-PIER-2-S-105
Port-N/C	P/P-29	SINGLE MODE	FO-PIER-2-S	White	SPARE	FO-PIER-2-S-106
Port-N/C	P/P-22	SINGLE MODE	FO-PIER-2-S	Red	SPARE	FO-PIER-2-S-107
Port-N/C	P/P-21	SINGLE MODE	FO-PIER-2-S	Black	SPARE	FO-PIER-2-S-108
STBD-5P	P/P-43	SINGLE MODE	FO-PIER-4-S	Blue	TX (STBD)	FO-PIER-4-S-101
STBD-5J	P/P-44	SINGLE MODE	FO-PIER-4-S	Orange	RX (STBD)	FO-PIER-4-S-102
STBD-6P	P/P-35	SINGLE MODE	FO-PIER-4-S	Green	SPARE	FO-PIER-4-S-103
STBD-6J	P/P-36	SINGLE MODE	FO-PIER-4-S	Brown	SPARE	FO-PIER-4-S-104
STBD-N/C	P/P-27	SINGLE MODE	FO-PIER-4-S	Gray	SPARE	FO-PIER-4-S-105
STBD-N/C	P/P-28	SINGLE MODE	FO-PIER-4-S	White	SPARE	FO-PIER-4-S-106
STBD-N/C	P/P-19	SINGLE MODE	FO-PIER-4-S	Red	SPARE	FO-PIER-4-S-107
STBD-N/C	P/P-20	SINGLE MODE	FO-PIER-4-S	Black	SPARE	FO-PIER-4-S-108

Source: https://assist.dla.mil -- Downloaded: 2016-12-10T08:13Z
Check the source to verify that this is the current version before use.

TABLE 7-IV. Multimode cable connections for version I, class S network configuration (see figure 7-12).

Unit A Term. No.	Unit B Term. No.	CABLE TYPE & Number		COLOR CODE	Function	Fiber Designation
STBD1-1P	P/P-48	MULTIMODE	FO-PIER-9-M	Blue	TX(STBD1)	FO-PIER-9-M-101
STBD1-1J	P/P-47	MULTIMODE	FO-PIER-9-M	Orange	RX(STBD1)	FO-PIER-9-M-102
STBD1-2P	P/P-40	MULTIMODE	FO-PIER-9-M	Green	SPARE	FO-PIER-9-M-103
STBD1-2J	P/P-39	MULTIMODE	FO-PIER-9-M	Brown	SPARE	FO-PIER-9-M-104
STBD1-3P	P/P-32	MULTIMODE	FO-PIER-9-M	Gray	SPARE	FO-PIER-9-M-105
STBD1-3J	P/P-31	MULTIMODE	FO-PIER-9-M	White	SPARE	FO-PIER-9-M-106
STBD1-4P	P/P-24	MULTIMODE	FO-PIER-9-M	Red	SPARE	FO-PIER-9-M-107
STBD1-4J	P/P-23	MULTIMODE	FO-PIER-9-M	Black	SPARE	FO-PIER-9-M-108
STBD2-1P	P/P-41	MULTIMODE	FO-PIER-11-M	Blue	TX(STBD2)	FO-PIER-11-M-101
STBD2-1J	P/P-42	MULTIMODE	FO-PIER-11-M	Orange	RX(STBD2)	FO-PIER-11-M-102
STBD2-2P	P/P-33	MULTIMODE	FO-PIER-11-M	Green	SPARE	FO-PIER-11-M-103
STBD2-2J	P/P-34	MULTIMODE	FO-PIER-11-M	Brown	SPARE	FO-PIER-11-M-104
STBD2-3P	P/P-25	MULTIMODE	FO-PIER-11-M	Gray	SPARE	FO-PIER-11-M-105
STBD2-3J	P/P-26	MULTIMODE	FO-PIER-11-M	White	SPARE	FO-PIER-11-M-106
STBD2-4P	P/P-17	MULTIMODE	FO-PIER-11-M	Red	SPARE	FO-PIER-11-M-107
STBD2-4J	P/P-18	MULTIMODE	FO-PIER-11-M	Black	SPARE	FO-PIER-11-M-108

Source: https://assist.dla.mil -- Downloaded: 2016-12-10T08:13Z
Check the source to verify that this is the current version before use.

TABLE 7-V. Single mode cable connections for version I, class S network configuration (see figure 7-12).

Unit A Term. No.	Unit B Term. No.	CABLE TYPE & Number		COLOR CODE	Function	Fiber Designation
STBD1-5P	P/P-46	SINGLE MODE	FO-PIER-10-S	Blue	TX(STBD1)	FO-PIER-10-S-101
STBD1-5J	P/P-45	SINGLE MODE	FO-PIER-10-S	Orange	RX(STBD1)	FO-PIER-10-S-102
STBD1-6P	P/P-38	SINGLE MODE	FO-PIER-10-S	Green	SPARE	FO-PIER-10-S-103
STBD1-6J	P/P-37	SINGLE MODE	FO-PIER-10-S	Brown	SPARE	FO-PIER-10-S-104
STBD1-N/C	P/P-30	SINGLE MODE	FO-PIER-10-S	Gray	SPARE	FO-PIER-10-S-105
STBD1-N/C	P/P-29	SINGLE MODE	FO-PIER-10-S	White	SPARE	FO-PIER-10-S-106
STBD1-N/C	P/P-22	SINGLE MODE	FO-PIER-10-S	Red	SPARE	FO-PIER-10-S-107
STBD1-N/C	P/P-21	SINGLE MODE	FO-PIER-10-S	Black	SPARE	FO-PIER-10-S-108
STBD2-5P	P/P-43	SINGLE MODE	FO-PIER-12-S	Blue	TX(STBD2)	FO-PIER-12-S-101
STBD2-5J	P/P-44	SINGLE MODE	FO-PIER-12-S	Orange	RX(STBD2)	FO-PIER-12-S-102
STBD2-6P	P/P-35	SINGLE MODE	FO-PIER-12-S	Green	SPARE	FO-PIER-12-S-103
STBD2-6J	P/P-36	SINGLE MODE	FO-PIER-12-S	Brown	SPARE	FO-PIER-12-S-104
STBD2-N/C	P/P-27	SINGLE MODE	FO-PIER-12-S	Gray	SPARE	FO-PIER-12-S-105
STBD2-N/C	P/P-28	SINGLE MODE	FO-PIER-12-S	White	SPARE	FO-PIER-12-S-106
STBD2-N/C	P/P-19	SINGLE MODE	FO-PIER-12-S	Red	SPARE	FO-PIER-12-S-107
STBD2-N/C	P/P-20	SINGLE MODE	FO-PIER-12-S	Black	SPARE	FO-PIER-12-S-108

Source: https://assist.dla.mil -- Downloaded: 2016-12-10T08:13Z
Check the source to verify that this is the current version before use.

TABLE 7-VI. Multimode cable connections for version I, class P network configuration (see figure 7-13).

Unit A Term. No.	Unit B Term. No.	CABLE TYPE & Number		COLOR CODE	Function	Fiber Designation
Port-1J	P/P-48	MULTIMODE	FO-PIER-13-M	Blue	TX (PORT)	FO-PIER-13-M-101
Port-1P	P/P-47	MULTIMODE	FO-PIER-13-M	Orange	RX (PORT)	FO-PIER-13-M-102
Port-2J	P/P-40	MULTIMODE	FO-PIER-13-M	Green	SPARE	FO-PIER-13-M-103
Port-2P	P/P-39	MULTIMODE	FO-PIER-13-M	Brown	SPARE	FO-PIER-13-M-104
Port-3J	P/P-32	MULTIMODE	FO-PIER-13-M	Gray	SPARE	FO-PIER-13-M-105
Port-3P	P/P-31	MULTIMODE	FO-PIER-13-M	White	SPARE	FO-PIER-13-M-106
Port-4J	P/P-24	MULTIMODE	FO-PIER-13-M	Red	SPARE	FO-PIER-13-M-107
Port-4P	P/P-23	MULTIMODE	FO-PIER-13-M	Black	SPARE	FO-PIER-13-M-108
STBD-1P	P/P-41	MULTIMODE	FO-PIER-15-M	Blue	TX (STBD)	FO-PIER-15-M-101
STBD-1J	P/P-42	MULTIMODE	FO-PIER-15-M	Orange	RX (STBD)	FO-PIER-15-M-102
STBD-2P	P/P-33	MULTIMODE	FO-PIER-15-M	Green	SPARE	FO-PIER-15-M-103
STBD-2J	P/P-34	MULTIMODE	FO-PIER-15-M	Brown	SPARE	FO-PIER-15-M-104
STBD-3P	P/P-25	MULTIMODE	FO-PIER-15-M	Gray	SPARE	FO-PIER-15-M-105
STBD-3J	P/P-26	MULTIMODE	FO-PIER-15-M	White	SPARE	FO-PIER-15-M-106
STBD-4P	P/P-17	MULTIMODE	FO-PIER-15-M	Red	SPARE	FO-PIER-15-M-107
STBD-4J	P/P-18	MULTIMODE	FO-PIER-15-M	Black	SPARE	FO-PIER-15-M-108

Source: https://assist.dla.mil -- Downloaded: 2016-12-10T08:13Z
Check the source to verify that this is the current version before use.

TABLE 7-VII. Single mode cable connections for version I, class P network configuration (see figure 7-13).

Unit A Term. No.	Unit B Term. No.	CABLE TYPE & Number		COLOR CODE	Function	Fiber Designation
Port-5J	P/P-46	SINGLE MODE	FO-PIER-14-S	Blue	TX (PORT)	FO-PIER-14-S-101
Port-5P	P/P-45	SINGLE MODE	FO-PIER-14-S	Orange	RX (PORT)	FO-PIER-14-S-102
Port-6J	P/P-38	SINGLE MODE	FO-PIER-14-S	Green	SPARE	FO-PIER-14-S-103
Port-6P	P/P-37	SINGLE MODE	FO-PIER-14-S	Brown	SPARE	FO-PIER-14-S-104
Port-N/C	P/P-30	SINGLE MODE	FO-PIER-14-S	Gray	SPARE	FO-PIER-14-S-105
Port-N/C	P/P-29	SINGLE MODE	FO-PIER-14-S	White	SPARE	FO-PIER-14-S-106
Port-N/C	P/P-22	SINGLE MODE	FO-PIER-14-S	Red	SPARE	FO-PIER-14-S-107
Port-N/C	P/P-21	SINGLE MODE	FO-PIER-14-S	Black	SPARE	FO-PIER-14-S-108
STBD-5P	P/P-43	SINGLE MODE	FO-PIER-16-S	Blue	TX (STBD)	FO-PIER-16-S-101
STBD-5J	P/P-44	SINGLE MODE	FO-PIER-16-S	Orange	RX (STBD)	FO-PIER-16-S-102
STBD-6P	P/P-35	SINGLE MODE	FO-PIER-16-S	Green	SPARE	FO-PIER-16-S-103
STBD-6J	P/P-36	SINGLE MODE	FO-PIER-16-S	Brown	SPARE	FO-PIER-16-S-104
STBD-N/C	P/P-27	SINGLE MODE	FO-PIER-16-S	Gray	SPARE	FO-PIER-16-S-105
STBD-N/C	P/P-28	SINGLE MODE	FO-PIER-16-S	White	SPARE	FO-PIER-16-S-106
STBD-N/C	P/P-19	SINGLE MODE	FO-PIER-16-S	Red	SPARE	FO-PIER-16-S-107
STBD-N/C	P/P-20	SINGLE MODE	FO-PIER-16-S	Black	SPARE	FO-PIER-16-S-108

Source: https://assist.dla.mil -- Downloaded: 2016-12-10T08:13Z
Check the source to verify that this is the current version before use.

TABLE 7-VIII. Multimode cable connections for version II, class T network configuration (see figures 7-10 and 7-11).

Unit A Term. No.	Unit B Term. No.	CABLE TYPE & Number		COLOR CODE	Function	Fiber Designation
Port-4J	P/P-48	MULTIMODE	FO-PIER-1-M	Blue	TX (PORT)	FO-PIER-1-M-101
Port-4P	P/P-47	MULTIMODE	FO-PIER-1-M	Orange	RX (PORT)	FO-PIER-1-M-102
Port-N/C	P/P-40	MULTIMODE	FO-PIER-1-M	Green	SPARE	FO-PIER-1-M-103
Port-N/C	P/P-39	MULTIMODE	FO-PIER-1-M	Brown	SPARE	FO-PIER-1-M-104
Port-N/C	P/P-32	MULTIMODE	FO-PIER-1-M	Gray	SPARE	FO-PIER-1-M-105
Port-N/C	P/P-31	MULTIMODE	FO-PIER-1-M	White	SPARE	FO-PIER-1-M-106
Port-N/C	P/P-24	MULTIMODE	FO-PIER-1-M	Red	SPARE	FO-PIER-1-M-107
Port-N/C	P/P-23	MULTIMODE	FO-PIER-1-M	Black	SPARE	FO-PIER-1-M-108
STBD-4P	P/P-41	MULTIMODE	FO-PIER-3-M	Blue	TX (STBD)	FO-PIER-3-M-101
STBD-4J	P/P-42	MULTIMODE	FO-PIER-3-M	Orange	RX (STBD)	FO-PIER-3-M-102
STBD-N/C	P/P-33	MULTIMODE	FO-PIER-3-M	Green	SPARE	FO-PIER-3-M-103
STBD-N/C	P/P-34	MULTIMODE	FO-PIER-3-M	Brown	SPARE	FO-PIER-3-M-104
STBD-N/C	P/P-25	MULTIMODE	FO-PIER-3-M	Gray	SPARE	FO-PIER-3-M-105
STBD-N/C	P/P-26	MULTIMODE	FO-PIER-3-M	White	SPARE	FO-PIER-3-M-106
STBD-N/C	P/P-17	MULTIMODE	FO-PIER-3-M	Red	SPARE	FO-PIER-3-M-107
STBD-N/C	P/P-18	MULTIMODE	FO-PIER-3-M	Black	SPARE	FO-PIER-3-M-108
Port-1J	STBD-1P	MULTIMODE	FO-PIER-5-M	Blue	Pass Thru	FO-PIER-5-M-101
Port-1P	STBD-1J	MULTIMODE	FO-PIER-5-M	Orange	Pass Thru	FO-PIER-5-M-102
Port-2J	STBD-2P	MULTIMODE	FO-PIER-5-M	Green	Pass Thru	FO-PIER-5-M-103
Port-2P	STBD-2J	MULTIMODE	FO-PIER-5-M	Brown	Pass Thru	FO-PIER-5-M-104
Port-3J	STBD-3P	MULTIMODE	FO-PIER-5-M	Gray	Pass Thru	FO-PIER-5-M-105
Port-3P	STBD-3J	MULTIMODE	FO-PIER-5-M	White	Pass Thru	FO-PIER-5-M-106
Port-N/C	STBD-N/C	MULTIMODE	FO-PIER-5-M	Red	SPARE	FO-PIER-5-M-107
Port-N/C	STBD-N/C	MULTIMODE	FO-PIER-5-M	Black	SPARE	FO-PIER-5-M-108

Source: https://assist.dla.mil -- Downloaded: 2016-12-10T08:13Z
Check the source to verify that this is the current version before use.

TABLE 7-IX. Single mode cable connections for version II, class T network configuration (see figures 7-10 and 7-11).

Unit A Term. No.	Unit B Term. No.	CABLE TYPE & Number		COLOR CODE	Function	Fiber Designation
Port-5J	P/P-46	SINGLE MODE	FO-PIER-2-S	Blue	TX (PORT)	FO-PIER-2-S-101
Port-5P	P/P-45	SINGLE MODE	FO-PIER-2-S	Orange	RX (PORT)	FO-PIER-2-S-102
Port-6J	P/P-38	SINGLE MODE	FO-PIER-2-S	Green	SPARE	FO-PIER-2-S-103
Port-6P	P/P-37	SINGLE MODE	FO-PIER-2-S	Brown	SPARE	FO-PIER-2-S-104
Port-N/C	P/P-30	SINGLE MODE	FO-PIER-2-S	Gray	SPARE	FO-PIER-2-S-105
Port-N/C	P/P-29	SINGLE MODE	FO-PIER-2-S	White	SPARE	FO-PIER-2-S-106
Port-N/C	P/P-22	SINGLE MODE	FO-PIER-2-S	Red	SPARE	FO-PIER-2-S-107
Port-N/C	P/P-21	SINGLE MODE	FO-PIER-2-S	Black	SPARE	FO-PIER-2-S-108
STBD-5P	P/P-43	SINGLE MODE	FO-PIER-4-S	Blue	TX (STBD)	FO-PIER-4-S-101
STBD-5J	P/P-44	SINGLE MODE	FO-PIER-4-S	Orange	RX (STBD)	FO-PIER-4-S-102
STBD-6P	P/P-35	SINGLE MODE	FO-PIER-4-S	Green	SPARE	FO-PIER-4-S-103
STBD-6J	P/P-36	SINGLE MODE	FO-PIER-4-S	Brown	SPARE	FO-PIER-4-S-104
STBD-N/C	P/P-27	SINGLE MODE	FO-PIER-4-S	Gray	SPARE	FO-PIER-4-S-105
STBD-N/C	P/P-28	SINGLE MODE	FO-PIER-4-S	White	SPARE	FO-PIER-4-S-106
STBD-N/C	P/P-19	SINGLE MODE	FO-PIER-4-S	Red	SPARE	FO-PIER-4-S-107
STBD-N/C	P/P-20	SINGLE MODE	FO-PIER-4-S	Black	SPARE	FO-PIER-4-S-108

Source: https://assist.dla.mil -- Downloaded: 2016-12-10T08:13Z
Check the source to verify that this is the current version before use.

TABLE 7-X. Multimode cable connections for version II, class S network configuration (see figure 7-12).

Unit A Term. No.	Unit B Term. No.	CABLE TYPE & Number		COLOR CODE	Function	Fiber Designation
STBD1-1P	P/P-48	MULTIMODE	FO-PIER-9-M	Blue	SPARE	FO-PIER-9-M-101
STBD1-1J	P/P-47	MULTIMODE	FO-PIER-9-M	Orange	SPARE	FO-PIER-9-M-102
STBD1-2P	P/P-40	MULTIMODE	FO-PIER-9-M	Green	SPARE	FO-PIER-9-M-103
STBD1-2J	P/P-39	MULTIMODE	FO-PIER-9-M	Brown	SPARE	FO-PIER-9-M-104
STBD1-3P	P/P-32	MULTIMODE	FO-PIER-9-M	Gray	SPARE	FO-PIER-9-M-105
STBD1-3J	P/P-31	MULTIMODE	FO-PIER-9-M	White	SPARE	FO-PIER-9-M-106
STBD1-4P	P/P-24	MULTIMODE	FO-PIER-9-M	Red	TX(STBD1)	FO-PIER-9-M-107
STBD1-4J	P/P-23	MULTIMODE	FO-PIER-9-M	Black	RX(STBD1)	FO-PIER-9-M-108
STBD2-1P	P/P-41	MULTIMODE	FO-PIER-11-M	Blue	SPARE	FO-PIER-11-M-101
STBD2-1J	P/P-42	MULTIMODE	FO-PIER-11-M	Orange	SPARE	FO-PIER-11-M-102
STBD2-2P	P/P-33	MULTIMODE	FO-PIER-11-M	Green	SPARE	FO-PIER-11-M-103
STBD2-2J	P/P-34	MULTIMODE	FO-PIER-11-M	Brown	SPARE	FO-PIER-11-M-104
STBD2-3P	P/P-25	MULTIMODE	FO-PIER-11-M	Gray	SPARE	FO-PIER-11-M-105
STBD2-3J	P/P-26	MULTIMODE	FO-PIER-11-M	White	SPARE	FO-PIER-11-M-106
STBD2-4P	P/P-17	MULTIMODE	FO-PIER-11-M	Red	TX(STBD2)	FO-PIER-11-M-107
STBD2-4J	P/P-18	MULTIMODE	FO-PIER-11-M	Black	RX(STBD2)	FO-PIER-11-M-108

Source: https://assist.dla.mil -- Downloaded: 2016-12-10T08:13Z
Check the source to verify that this is the current version before use.

TABLE 7-XI. Single mode cable connections for version II, class S network configuration (see figure 7-12).

Unit A Term. No.	Unit B Term. No.	CABLE TYPE & Number		COLOR CODE	Function	Fiber Designation
STBD1-5P	P/P-46	SINGLE MODE	FO-PIER-10-S	Blue	TX(STBD1)	FO-PIER-10-S-101
STBD1-5J	P/P-45	SINGLE MODE	FO-PIER-10-S	Orange	RX(STBD1)	FO-PIER-10-S-102
STBD1-6P	P/P-38	SINGLE MODE	FO-PIER-10-S	Green	SPARE	FO-PIER-10-S-103
STBD1-6J	P/P-37	SINGLE MODE	FO-PIER-10-S	Brown	SPARE	FO-PIER-10-S-104
STBD1-N/C	P/P-30	SINGLE MODE	FO-PIER-10-S	Gray	SPARE	FO-PIER-10-S-105
STBD1-N/C	P/P-29	SINGLE MODE	FO-PIER-10-S	White	SPARE	FO-PIER-10-S-106
STBD1-N/C	P/P-22	SINGLE MODE	FO-PIER-10-S	Red	SPARE	FO-PIER-10-S-107
STBD1-N/C	P/P-21	SINGLE MODE	FO-PIER-10-S	Black	SPARE	FO-PIER-10-S-108
STBD2-5P	P/P-43	SINGLE MODE	FO-PIER-12-S	Blue	TX(STBD2)	FO-PIER-12-S-101
STBD2-5J	P/P-44	SINGLE MODE	FO-PIER-12-S	Orange	RX(STBD2)	FO-PIER-12-S-102
STBD2-6P	P/P-35	SINGLE MODE	FO-PIER-12-S	Green	SPARE	FO-PIER-12-S-103
STBD2-6J	P/P-36	SINGLE MODE	FO-PIER-12-S	Brown	SPARE	FO-PIER-12-S-104
STBD2-N/C	P/P-27	SINGLE MODE	FO-PIER-12-S	Gray	SPARE	FO-PIER-12-S-105
STBD2-N/C	P/P-28	SINGLE MODE	FO-PIER-12-S	White	SPARE	FO-PIER-12-S-106
STBD2-N/C	P/P-19	SINGLE MODE	FO-PIER-12-S	Red	SPARE	FO-PIER-12-S-107
STBD2-N/C	P/P-20	SINGLE MODE	FO-PIER-12-S	Black	SPARE	FO-PIER-12-S-108

Source: https://assist.dla.mil -- Downloaded: 2016-12-10T08:13Z
Check the source to verify that this is the current version before use.

TABLE 7-XII. Multimode cable connections for version II, class P network configuration (see figure 7-13).

Unit A Term. No.	Unit B Term. No.	CABLE TYPE & Number		COLOR CODE	Function	Fiber Designation
Port-1J	P/P-48	MULTIMODE	FO-PIER-13-M	Blue	SPARE	FO-PIER-13-M-101
Port-1P	P/P-47	MULTIMODE	FO-PIER-13-M	Orange	SPARE	FO-PIER-13-M-102
Port-2J	P/P-40	MULTIMODE	FO-PIER-13-M	Green	SPARE	FO-PIER-13-M-103
Port-2P	P/P-39	MULTIMODE	FO-PIER-13-M	Brown	SPARE	FO-PIER-13-M-104
Port-3J	P/P-32	MULTIMODE	FO-PIER-13-M	Gray	SPARE	FO-PIER-13-M-105
Port-3P	P/P-31	MULTIMODE	FO-PIER-13-M	White	SPARE	FO-PIER-13-M-106
Port-4J	P/P-24	MULTIMODE	FO-PIER-13-M	Red	TX (PORT)	FO-PIER-13-M-107
Port-4P	P/P-23	MULTIMODE	FO-PIER-13-M	Black	RX (PORT)	FO-PIER-13-M-108
STBD-1P	P/P-41	MULTIMODE	FO-PIER-15-M	Blue	SPARE	FO-PIER-15-M-101
STBD-1J	P/P-42	MULTIMODE	FO-PIER-15-M	Orange	SPARE	FO-PIER-15-M-102
STBD-2P	P/P-33	MULTIMODE	FO-PIER-15-M	Green	SPARE	FO-PIER-15-M-103
STBD-2J	P/P-34	MULTIMODE	FO-PIER-15-M	Brown	SPARE	FO-PIER-15-M-104
STBD-3P	P/P-25	MULTIMODE	FO-PIER-15-M	Gray	SPARE	FO-PIER-15-M-105
STBD-3J	P/P-26	MULTIMODE	FO-PIER-15-M	White	SPARE	FO-PIER-15-M-106
STBD-4P	P/P-17	MULTIMODE	FO-PIER-15-M	Red	TX (PORT)	FO-PIER-15-M-107
STBD-4J	P/P-18	MULTIMODE	FO-PIER-15-M	Black	RX (PORT)	FO-PIER-15-M-108

Source: https://assist.dla.mil -- Downloaded: 2016-12-10T08:13Z
Check the source to verify that this is the current version before use.

TABLE 7-XIII. Single mode cable connections for version II, class P network configuration (see figure 7-13).

Unit A Term. No.	Unit B Term. No.	CABLE TYPE & Number		COLOR CODE	Function	Fiber Designation
Port-5J	P/P-46	SINGLE MODE	FO-PIER-14-S	Blue	TX (PORT)	FO-PIER-14-S-101
Port-5P	P/P-45	SINGLE MODE	FO-PIER-14-S	Orange	RX (PORT)	FO-PIER-14-S-102
Port-6J	P/P-38	SINGLE MODE	FO-PIER-14-S	Green	SPARE	FO-PIER-14-S-103
Port-6P	P/P-37	SINGLE MODE	FO-PIER-14-S	Brown	SPARE	FO-PIER-14-S-104
Port-N/C	P/P-30	SINGLE MODE	FO-PIER-14-S	Gray	SPARE	FO-PIER-14-S-105
Port-N/C	P/P-29	SINGLE MODE	FO-PIER-14-S	White	SPARE	FO-PIER-14-S-106
Port-N/C	P/P-22	SINGLE MODE	FO-PIER-14-S	Red	SPARE	FO-PIER-14-S-107
Port-N/C	P/P-21	SINGLE MODE	FO-PIER-14-S	Black	SPARE	FO-PIER-14-S-108
STBD-5P	P/P-43	SINGLE MODE	FO-PIER-16-S	Blue	TX (STBD)	FO-PIER-16-S-101
STBD-5J	P/P-44	SINGLE MODE	FO-PIER-16-S	Orange	RX (STBD)	FO-PIER-16-S-102
STBD-6P	P/P-35	SINGLE MODE	FO-PIER-16-S	Green	SPARE	FO-PIER-16-S-103
STBD-6J	P/P-36	SINGLE MODE	FO-PIER-16-S	Brown	SPARE	FO-PIER-16-S-104
STBD-N/C	P/P-27	SINGLE MODE	FO-PIER-16-S	Gray	SPARE	FO-PIER-16-S-105
STBD-N/C	P/P-28	SINGLE MODE	FO-PIER-16-S	White	SPARE	FO-PIER-16-S-106
STBD-N/C	P/P-19	SINGLE MODE	FO-PIER-16-S	Red	SPARE	FO-PIER-16-S-107
STBD-N/C	P/P-20	SINGLE MODE	FO-PIER-16-S	Black	SPARE	FO-PIER-16-S-108

Source: https://assist.dla.mil -- Downloaded: 2016-12-10T08:13Z
Check the source to verify that this is the current version before use.

TABLE 7-XIV. Multimode cable connections for version III, class T network configuration (see figures 7-10 and 7-11).

Unit A Term. No.	Unit B Term. No.	CABLE TYPE & Number		COLOR CODE	Function	Fiber Designation
Port-1J	P/P-48	MULTIMODE	FO-PIER-1-M	Blue	TX (PORT)	FO-PIER-1-M-101
Port-1P	P/P-47	MULTIMODE	FO-PIER-1-M	Orange	RX (PORT)	FO-PIER-1-M-102
Port-N/C	P/P-40	MULTIMODE	FO-PIER-1-M	Green	SPARE	FO-PIER-1-M-103
Port-N/C	P/P-39	MULTIMODE	FO-PIER-1-M	Brown	SPARE	FO-PIER-1-M-104
Port-N/C	P/P-32	MULTIMODE	FO-PIER-1-M	Gray	SPARE	FO-PIER-1-M-105
Port-N/C	P/P-31	MULTIMODE	FO-PIER-1-M	White	SPARE	FO-PIER-1-M-106
Port-N/C	P/P-24	MULTIMODE	FO-PIER-1-M	Red	SPARE	FO-PIER-1-M-107
Port-N/C	P/P-23	MULTIMODE	FO-PIER-1-M	Black	SPARE	FO-PIER-1-M-108
STBD-3P	P/P-41	MULTIMODE	FO-PIER-3-M	Blue	TX (STBD)	FO-PIER-3-M-101
STBD-3J	P/P-42	MULTIMODE	FO-PIER-3-M	Orange	RX (STBD)	FO-PIER-3-M-102
STBD-N/C	P/P-33	MULTIMODE	FO-PIER-3-M	Green	SPARE	FO-PIER-3-M-103
STBD-N/C	P/P-34	MULTIMODE	FO-PIER-3-M	Brown	SPARE	FO-PIER-3-M-104
STBD-N/C	P/P-25	MULTIMODE	FO-PIER-3-M	Gray	SPARE	FO-PIER-3-M-105
STBD-N/C	P/P-26	MULTIMODE	FO-PIER-3-M	White	SPARE	FO-PIER-3-M-106
STBD-N/C	P/P-17	MULTIMODE	FO-PIER-3-M	Red	SPARE	FO-PIER-3-M-107
STBD-N/C	P/P-18	MULTIMODE	FO-PIER-3-M	Black	SPARE	FO-PIER-3-M-108
Port-2J	STBD-1P	MULTIMODE	FO-PIER-5-M	Blue	Pass Thru	FO-PIER-5-M-101
Port-2P	STBD-1J	MULTIMODE	FO-PIER-5-M	Orange	Pass Thru	FO-PIER-5-M-102
Port-3J	STBD-2P	MULTIMODE	FO-PIER-5-M	Green	Pass Thru	FO-PIER-5-M-103
Port-3P	STBD-2J	MULTIMODE	FO-PIER-5-M	Brown	Pass Thru	FO-PIER-5-M-104
Port-4J	STBD-4P	MULTIMODE	FO-PIER-5-M	Gray	Pass Thru	FO-PIER-5-M-105
Port-4P	STBD-4J	MULTIMODE	FO-PIER-5-M	White	Pass Thru	FO-PIER-5-M-106
Port-N/C	STBD-N/C	MULTIMODE	FO-PIER-5-M	Red	SPARE	FO-PIER-5-M-107
Port-N/C	STBD-N/C	MULTIMODE	FO-PIER-5-M	Black	SPARE	FO-PIER-5-M-108

Source: https://assist.dla.mil -- Downloaded: 2016-12-10T08:13Z
Check the source to verify that this is the current version before use.

TABLE 7-XV. Single mode cable connections for version III, class T network configuration (see figures 7-10 and 7-11).

Unit A Term. No.	Unit B Term. No.	CABLE TYPE & Number		COLOR CODE	Function	Fiber Designation
Port-5J	P/P-46	SINGLE MODE	FO-PIER-2-S	Blue	TX (PORT)	FO-PIER-2-S-101
Port-5P	P/P-45	SINGLE MODE	FO-PIER-2-S	Orange	RX (PORT)	FO-PIER-2-S-102
Port-6J	P/P-38	SINGLE MODE	FO-PIER-2-S	Green	SPARE	FO-PIER-2-S-103
Port-6P	P/P-37	SINGLE MODE	FO-PIER-2-S	Brown	SPARE	FO-PIER-2-S-104
Port-N/C	P/P-30	SINGLE MODE	FO-PIER-2-S	Gray	SPARE	FO-PIER-2-S-105
Port-N/C	P/P-29	SINGLE MODE	FO-PIER-2-S	White	SPARE	FO-PIER-2-S-106
Port-N/C	P/P-22	SINGLE MODE	FO-PIER-2-S	Red	SPARE	FO-PIER-2-S-107
Port-N/C	P/P-21	SINGLE MODE	FO-PIER-2-S	Black	SPARE	FO-PIER-2-S-108
STBD-5P	P/P-43	SINGLE MODE	FO-PIER-4-S	Blue	TX (STBD)	FO-PIER-4-S-101
STBD-5J	P/P-44	SINGLE MODE	FO-PIER-4-S	Orange	RX (STBD)	FO-PIER-4-S-102
STBD-6P	P/P-35	SINGLE MODE	FO-PIER-4-S	Green	SPARE	FO-PIER-4-S-103
STBD-6J	P/P-36	SINGLE MODE	FO-PIER-4-S	Brown	SPARE	FO-PIER-4-S-104
STBD-N/C	P/P-27	SINGLE MODE	FO-PIER-4-S	Gray	SPARE	FO-PIER-4-S-105
STBD-N/C	P/P-28	SINGLE MODE	FO-PIER-4-S	White	SPARE	FO-PIER-4-S-106
STBD-N/C	P/P-19	SINGLE MODE	FO-PIER-4-S	Red	SPARE	FO-PIER-4-S-107
STBD-N/C	P/P-20	SINGLE MODE	FO-PIER-4-S	Black	SPARE	FO-PIER-4-S-108

Source: https://assist.dla.mil -- Downloaded: 2016-12-10T08:13Z
Check the source to verify that this is the current version before use.

TABLE 7-XVI. Multimode cable connections for version III, class P network configuration (see figure 7-13).

Unit A Term. No.	Unit B Term. No.	CABLE TYPE & Number		COLOR CODE	Function	Fiber Designation
Port-1J	P/P-48	MULTIMODE	FO-PIER-9-M	Blue	TX (PORT)	FO-PIER-9-M-101
Port-1P	P/P-47	MULTIMODE	FO-PIER-9-M	Orange	RX (PORT)	FO-PIER-9-M-102
Port-2J	P/P-40	MULTIMODE	FO-PIER-9-M	Green	SPARE	FO-PIER-9-M-103
Port-2P	P/P-39	MULTIMODE	FO-PIER-9-M	Brown	SPARE	FO-PIER-9-M-104
Port-3J	P/P-32	MULTIMODE	FO-PIER-9-M	Gray	SPARE	FO-PIER-9-M-105
Port-3P	P/P-31	MULTIMODE	FO-PIER-9-M	White	SPARE	FO-PIER-9-M-106
Port-4J	P/P-24	MULTIMODE	FO-PIER-9-M	Red	SPARE	FO-PIER-9-M-107
Port-4P	P/P-23	MULTIMODE	FO-PIER-9-M	Black	SPARE	FO-PIER-9-M-108
STBD-1P	P/P-41	MULTIMODE	FO-PIER-11-M	Blue	TX (STBD)	FO-PIER-11-M-101
STBD-1J	P/P-42	MULTIMODE	FO-PIER-11-M	Orange	RX (STBD)	FO-PIER-11-M-102
STBD-2P	P/P-33	MULTIMODE	FO-PIER-11-M	Green	SPARE	FO-PIER-11-M-103
STBD-2J	P/P-34	MULTIMODE	FO-PIER-11-M	Brown	SPARE	FO-PIER-11-M-104
STBD-3P	P/P-25	MULTIMODE	FO-PIER-11-M	Gray	SPARE	FO-PIER-11-M-105
STBD-3J	P/P-26	MULTIMODE	FO-PIER-11-M	White	SPARE	FO-PIER-11-M-106
STBD-4P	P/P-17	MULTIMODE	FO-PIER-11-M	Red	SPARE	FO-PIER-11-M-107
STBD-4J	P/P-18	MULTIMODE	FO-PIER-11-M	Black	SPARE	FO-PIER-11-M-108

Source: https://assist.dla.mil -- Downloaded: 2016-12-10T08:13Z
Check the source to verify that this is the current version before use.

TABLE 7-XVII. Single mode cable connections for version III, class P network configuration (see figure 7-13).

Unit A Term. No.	Unit B Term. No.	CABLE TYPE & Number		COLOR CODE	Function	Fiber Designation
Port-5J	P/P-46	SINGLE MODE	FO-PIER-10-S	Blue	TX (PORT)	FO-PIER-10-S-101
Port-5P	P/P-45	SINGLE MODE	FO-PIER-10-S	Orange	RX (PORT)	FO-PIER-10-S-102
Port-6J	P/P-38	SINGLE MODE	FO-PIER-10-S	Green	SPARE	FO-PIER-10-S-103
Port-6P	P/P-37	SINGLE MODE	FO-PIER-10-S	Brown	SPARE	FO-PIER-10-S-104
Port-N/C	P/P-30	SINGLE MODE	FO-PIER-10-S	Gray	SPARE	FO-PIER-10-S-105
Port-N/C	P/P-29	SINGLE MODE	FO-PIER-10-S	White	SPARE	FO-PIER-10-S-106
Port-N/C	P/P-22	SINGLE MODE	FO-PIER-10-S	Red	SPARE	FO-PIER-10-S-107
Port-N/C	P/P-21	SINGLE MODE	FO-PIER-10-S	Black	SPARE	FO-PIER-10-S-108
STBD-5P	P/P-43	SINGLE MODE	FO-PIER-12-S	Blue	TX (STBD)	FO-PIER-12-S-101
STBD-5J	P/P-44	SINGLE MODE	FO-PIER-12-S	Orange	RX (STBD)	FO-PIER-12-S-102
STBD-6P	P/P-35	SINGLE MODE	FO-PIER-12-S	Green	SPARE	FO-PIER-12-S-103
STBD-6J	P/P-36	SINGLE MODE	FO-PIER-12-S	Brown	SPARE	FO-PIER-12-S-104
STBD-N/C	P/P-27	SINGLE MODE	FO-PIER-12-S	Gray	SPARE	FO-PIER-12-S-105
STBD-N/C	P/P-28	SINGLE MODE	FO-PIER-12-S	White	SPARE	FO-PIER-12-S-106
STBD-N/C	P/P-19	SINGLE MODE	FO-PIER-12-S	Red	SPARE	FO-PIER-12-S-107
STBD-N/C	P/P-20	SINGLE MODE	FO-PIER-12-S	Black	SPARE	FO-PIER-12-S-108

Source: https://assist.dla.mil -- Downloaded: 2016-12-10T08:13Z
Check the source to verify that this is the current version before use.

TABLE 7-XVIII. Multimode cable connections for version IV, class T network configuration (see figures 7-10 and 7-11).

Unit A Term. No.	Unit B Term. No.	CABLE TYPE & Number		COLOR CODE	Function	Fiber Designation
Port-1J	P/P-48	MULTIMODE	FO-PIER-1-M	Blue	TX (PORT)	FO-PIER-1-M-101
Port-1P	P/P-47	MULTIMODE	FO-PIER-1-M	Orange	RX (PORT)	FO-PIER-1-M-102
Port-N/C	P/P-40	MULTIMODE	FO-PIER-1-M	Green	SPARE	FO-PIER-1-M-103
Port-N/C	P/P-39	MULTIMODE	FO-PIER-1-M	Brown	SPARE	FO-PIER-1-M-104
Port-N/C	P/P-32	MULTIMODE	FO-PIER-1-M	Gray	SPARE	FO-PIER-1-M-105
Port-N/C	P/P-31	MULTIMODE	FO-PIER-1-M	White	SPARE	FO-PIER-1-M-106
Port-N/C	P/P-24	MULTIMODE	FO-PIER-1-M	Red	SPARE	FO-PIER-1-M-107
Port-N/C	P/P-23	MULTIMODE	FO-PIER-1-M	Black	SPARE	FO-PIER-1-M-108
STBD-3P	P/P-41	MULTIMODE	FO-PIER-3-M	Blue	TX (STBD)	FO-PIER-3-M-101
STBD-3J	P/P-42	MULTIMODE	FO-PIER-3-M	Orange	RX (STBD)	FO-PIER-3-M-102
STBD-N/C	P/P-33	MULTIMODE	FO-PIER-3-M	Green	SPARE	FO-PIER-3-M-103
STBD-N/C	P/P-34	MULTIMODE	FO-PIER-3-M	Brown	SPARE	FO-PIER-3-M-104
STBD-N/C	P/P-25	MULTIMODE	FO-PIER-3-M	Gray	SPARE	FO-PIER-3-M-105
STBD-N/C	P/P-26	MULTIMODE	FO-PIER-3-M	White	SPARE	FO-PIER-3-M-106
STBD-N/C	P/P-17	MULTIMODE	FO-PIER-3-M	Red	SPARE	FO-PIER-3-M-107
STBD-N/C	P/P-18	MULTIMODE	FO-PIER-3-M	Black	SPARE	FO-PIER-3-M-108
Port-2J	STBD-1P	MULTIMODE	FO-PIER-5-M	Blue	Pass Thru	FO-PIER-5-M-101
Port-2P	STBD-1J	MULTIMODE	FO-PIER-5-M	Orange	Pass Thru	FO-PIER-5-M-102
Port-3J	STBD-2P	MULTIMODE	FO-PIER-5-M	Green	Pass Thru	FO-PIER-5-M-103
Port-3P	STBD-2J	MULTIMODE	FO-PIER-5-M	Brown	Pass Thru	FO-PIER-5-M-104
Port-N/C	STBD-N/C	MULTIMODE	FO-PIER-5-M	Gray	SPARE	FO-PIER-5-M-105
Port-N/C	STBD-N/C	MULTIMODE	FO-PIER-5-M	White	SPARE	FO-PIER-5-M-106
Port-N/C	STBD-N/C	MULTIMODE	FO-PIER-5-M	Red	SPARE	FO-PIER-5-M-107
Port-N/C	STBD-N/C	MULTIMODE	FO-PIER-5-M	Black	SPARE	FO-PIER-5-M-108

Source: https://assist.dla.mil -- Downloaded: 2016-12-10T08:13Z
Check the source to verify that this is the current version before use.

TABLE 7-XIX. Single mode cable connections for version IV, class T network configuration (see figures 7-10 and 7-11).

Unit A Term. No.	Unit B Term. No.	CABLE TYPE & Number		COLOR CODE	Function	Fiber Designation
Port-4J	P/P-46	SINGLE MODE	FO-PIER-2-S	Blue	TX (PORT)	FO-PIER-2-S-101
Port-4P	P/P-45	SINGLE MODE	FO-PIER-2-S	Orange	RX (PORT)	FO-PIER-2-S-102
Port-N/C	P/P-38	SINGLE MODE	FO-PIER-2-S	Green	SPARE	FO-PIER-2-S-103
Port-N/C	P/P-37	SINGLE MODE	FO-PIER-2-S	Brown	SPARE	FO-PIER-2-S-104
Port-N/C	P/P-30	SINGLE MODE	FO-PIER-2-S	Gray	SPARE	FO-PIER-2-S-105
Port-N/C	P/P-29	SINGLE MODE	FO-PIER-2-S	White	SPARE	FO-PIER-2-S-106
Port-N/C	P/P-22	SINGLE MODE	FO-PIER-2-S	Red	SPARE	FO-PIER-2-S-107
Port-N/C	P/P-21	SINGLE MODE	FO-PIER-2-S	Black	SPARE	FO-PIER-2-S-108
STBD-6P	P/P-43	SINGLE MODE	FO-PIER-4-S	Blue	TX (STBD)	FO-PIER-4-S-101
STBD-6J	P/P-44	SINGLE MODE	FO-PIER-4-S	Orange	RX (STBD)	FO-PIER-4-S-102
STBD-N/C	P/P-35	SINGLE MODE	FO-PIER-4-S	Green	SPARE	FO-PIER-4-S-103
STBD-N/C	P/P-36	SINGLE MODE	FO-PIER-4-S	Brown	SPARE	FO-PIER-4-S-104
STBD-N/C	P/P-27	SINGLE MODE	FO-PIER-4-S	Gray	SPARE	FO-PIER-4-S-105
STBD-N/C	P/P-28	SINGLE MODE	FO-PIER-4-S	White	SPARE	FO-PIER-4-S-106
STBD-N/C	P/P-19	SINGLE MODE	FO-PIER-4-S	Red	SPARE	FO-PIER-4-S-107
STBD-N/C	P/P-20	SINGLE MODE	FO-PIER-4-S	Black	SPARE	FO-PIER-4-S-108

Source: https://assist.dla.mil -- Downloaded: 2016-12-10T08:13Z
Check the source to verify that this is the current version before use.

TABLE 7-XIX. Single mode cable connections for version IV, class T network configuration (see figures 7-10 and 7-11) – continued.

Unit A Term. No.	Unit B Term. No.	CABLE TYPE & Number		COLOR CODE	Function	Fiber Designation
Port-5J	STBD-4P	SINGLE MODE	FO-PIER-6-S	Blue	Pass Thru	FO-PIER-6-S-101
Port-5P	STBD-4J	SINGLE MODE	FO-PIER-6-S	Orange	Pass Thru	FO-PIER-6-S-102
Port-6J	STBD-5P	SINGLE MODE	FO-PIER-6-S	Green	Pass Thru	FO-PIER-6-S-103
Port-6P	STBD-5J	SINGLE MODE	FO-PIER-6-S	Brown	Pass Thru	FO-PIER-6-S-104
Port-N/C	STBD-N/C	SINGLE MODE	FO-PIER-6-S	Gray	SPARE	FO-PIER-6-S-105
Port-N/C	STBD-N/C	SINGLE MODE	FO-PIER-6-S	White	SPARE	FO-PIER-6-S-106
Port-N/C	STBD-N/C	SINGLE MODE	FO-PIER-6-S	Red	SPARE	FO-PIER-6-S-107
Port-N/C	STBD-N/C	SINGLE MODE	FO-PIER-6-S	Black	SPARE	FO-PIER-6-S-108

NOTE: Cable FO-PIER-6-S is not shown on figures 7-10 and 7-11. This cable only applies to Version IV, Class T).

Source: https://assist.dla.mil -- Downloaded: 2016-12-10T08:13Z
Check the source to verify that this is the current version before use.

TABLE 7-XX. Multimode cable connections for version V, class B network configuration (see figures 7-14, 7-16 and 7-17).

Unit A Term. No.	Unit B Term. No.	CABLE TYPE & Number		COLOR CODE	Function	Fiber Designation
Hatch-1J	P/P-16	MULTIMODE	FO-PIER-1-M	Blue	TX (Hatch)	FO-PIER-1-M-101
Hatch-1P	P/P-12	MULTIMODE	FO-PIER-1-M	Orange	RX (Hatch)	FO-PIER-1-M-102
Hatch-2J	P/P-15	MULTIMODE	FO-PIER-1-M	Green	SPARE	FO-PIER-1-M-103
Hatch-2P	P/P-11	MULTIMODE	FO-PIER-1-M	Brown	SPARE	FO-PIER-1-M-104
Hatch-3J	P/P-14	MULTIMODE	FO-PIER-1-M	Gray	SPARE	FO-PIER-1-M-105
Hatch-3P	P/P-10	MULTIMODE	FO-PIER-1-M	White	SPARE	FO-PIER-1-M-106
Hatch-4J	P/P-13	MULTIMODE	FO-PIER-1-M	Red	SPARE	FO-PIER-1-M-107
Hatch-4P	P/P-9	MULTIMODE	FO-PIER-1-M	Black	SPARE	FO-PIER-1-M-108

TABLE 7-XXI. Single mode cable connections for version V, class B network configuration (see figures 7-14, 7-16 and 7-17).

Unit A Term. No.	Unit B Term. No.	CABLE TYPE & Number		COLOR CODE	Function	Fiber Designation
Hatch-5J	P/P-8	SINGLE MODE	FO-PIER-2-S	Blue	TX (Hatch)	FO-PIER-2-S-101
Hatch-5P	P/P-4	SINGLE MODE	FO-PIER-2-S	Orange	RX (Hatch)	FO-PIER-2-S-102
Hatch-	P/P-7	SINGLE MODE	FO-PIER-2-S	Green	SPARE	FO-PIER-2-S-103
Hatch-6P	P/P-3	SINGLE MODE	FO-PIER-2-S	Brown	SPARE	FO-PIER-2-S-104
Hatch-N/C	P/P-6	SINGLE MODE	FO-PIER-2-S	Gray	SPARE	FO-PIER-2-S-105
Hatch-N/C	P/P-2	SINGLE MODE	FO-PIER-2-S	White	SPARE	FO-PIER-2-S-106
Hatch-N/C	P/P-5	SINGLE MODE	FO-PIER-2-S	Red	SPARE	FO-PIER-2-S-107
Hatch-N/C	P/P-1	SINGLE MODE	FO-PIER-2-S	Black	SPARE	FO-PIER-2-S-108

Source: https://assist.dla.mil -- Downloaded: 2016-12-10T08:13Z
Check the source to verify that this is the current version before use.

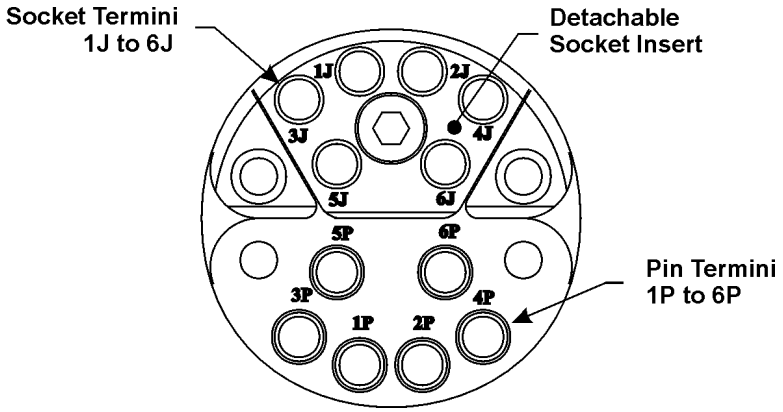

FIGURE 7-9. Hermaphroditic connector pinout designations.

5.4 Shipboard interconnection box placement guidelines.

5.4.1 Cleanliness considerations. Cleanliness is a prime consideration to reduce termini cleaning requirements with this fiber optic, umbilical assembly connection. Select a location for the shipboard interconnection boxes so that hermaphroditic receptacle is not directly exposed to the weather or excessive dirt/dust.

5.4.2 Description of the two preferred pierside connectivity installation schemes. There are two pierside connectivity installation schemes that determine the number and placement of the interconnection boxes. Selection is based on the ship class (see table 7-XXII). These two routing schemes are preferred to the extent that the through-the-ship umbilical assembly routing scheme can be used in a nested ship configuration (see 5.6). Alternate installations for different ship classes are described in section 5.4.5. (see tables 7-XXII, 7-XXIII and 7-XXIV.)

a. Installation A (see figure 7-10). This pierside connectivity installation is used for larger classes of surface ships (such as LPD, LSD, AOE and AGF). These ships have a midship distance between the port and starboard hatch/ship entry point that is greater than 50 feet. This installation scheme places an interconnection box with a hermaphroditic receptacle at midships, both port and starboard, and an interconnection box with a patch panel in the radio room. Shipboard cable runs identified in 5.3.1 are made among these three interconnection boxes. The fiber optic components for installation A, less cable, are identified as the Installation A Kit in NAVSEA Drawing 7325762.

b. Installation B (see figure 7-11). This pierside connectivity installation is used for smaller classes of surface ships (such as FFG’s, DDG’s, CG’s and DD’s). These surface ships have a midship distance between the port and starboard hatch/ship entry point that is less than 50 feet. This installation scheme places one interconnection box with two hermaphroditic receptacles (one allocated for port connections and the other allocated for starboard connections) at a central location (midships) and an interconnection box with a patch panel in the radio room. Shipboard cable runs identified in 5.3.1 are made between these two interconnection boxes. This configuration is identified as the Installation B Kit in NAVSEA Drawing 7325762.

Source: https://assist.dla.mil -- Downloaded: 2016-12-10T08:13Z
Check the source to verify that this is the current version before use.

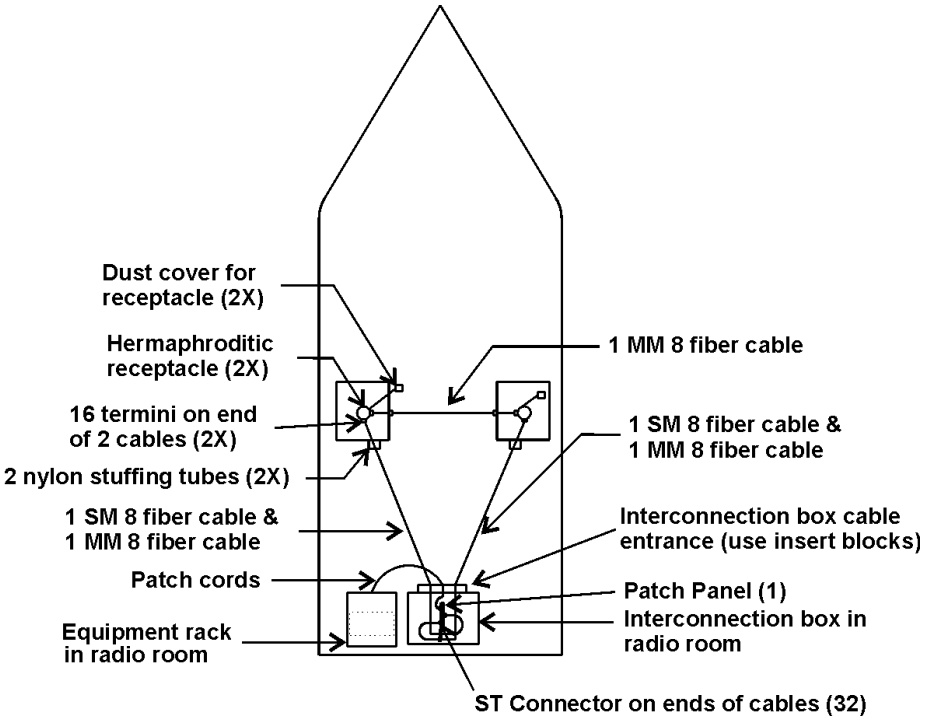

FIGURE 7-10. Installation “A” shipboard layout.

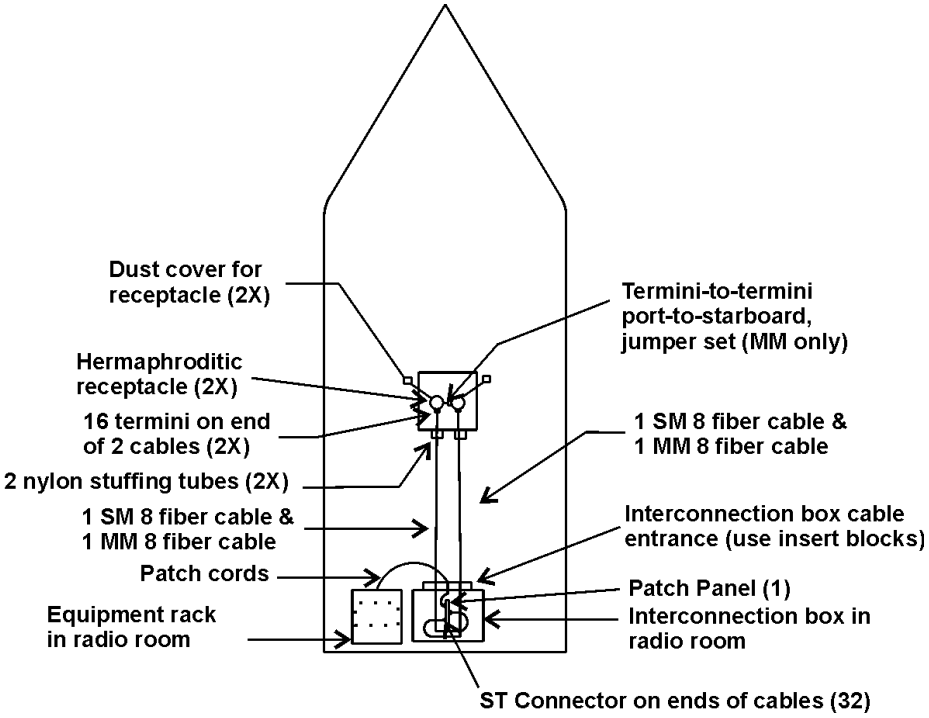

FIGURE 7-11. Installation “B” shipboard layout.

Source: https://assist.dla.mil -- Downloaded: 2016-12-10T08:13Z
Check the source to verify that this is the current version before use.

5.4.3 Installation “A” guidance.

a. Place the interconnection boxes with hermaphroditic receptacles midship, at port and starboard locations not directly exposed to the weather.

b. Determine the umbilical assembly routing to the port/starboard interconnection box.

(1) If the umbilical assembly is to be routed such that the hermaphroditic cable plug approaches the interconnection box off the deck, place the hermaphroditic receptacle on the bottom of the interconnection box.

(2) If the umbilical assembly is to be routed such that the hermaphroditic cable plug approaches the interconnection box from the overhead, place the hermaphroditic receptacle on the top of the interconnection box.

c. Installation height of the port and starboard interconnection boxes shall permit easy access to the hermaphroditic receptacle. This access is required for cleaning and connecting to the hermaphroditic cable plug on the umbilical assembly.

5.4.4 Installation “B” guidance.

a. Place the interconnection boxes with the two hermaphroditic receptacles midship, at a location not directly exposed to the weather.

b. Determine the umbilical assembly routing to the midship interconnection box.

NOTE: Preferred routing of the umbilical assembly approach to the interconnection box is through or close to the overhead, when feasible.

NOTE: Locating the hermaphroditic receptacle on the top or bottom of the interconnection box is recommended to eliminate a sharp bend and minimize danger.

(1) If the umbilical assembly is to be routed such that the hermaphroditic cable plug approaches the interconnection box off the deck, place both of the hermaphroditic receptacles on the bottom of the interconnection box.

(2) If the umbilical assembly is to be routed such that the hermaphroditic cable plug approaches the interconnection box from the overhead, place both of the hermaphroditic receptacles on the top of the interconnection box.

c. Installation height of the midship interconnection box shall permit easy access to the hermaphroditic receptacle. This access is required for cleaning and connecting to the hermaphroditic cable plug on the umbilical assembly.

d. Specific recommendations for ships with one interconnection box midships. Place the midship interconnection box on the aft bulkhead in the midship passageway.

(1) Install 3 inch conduit ports above and to the side of the port and starboard hatches at the midship passageway.

NOTE: The intent is to route the umbilical assembly from the pier through the 3 inch conduit port, into the ship’s overhead, down the aft bulkhead to the jam nut mounted receptacles on the interconnection box.

Source: https://assist.dla.mil -- Downloaded: 2016-12-10T08:13Z
Check the source to verify that this is the current version before use.

(2) Place a protective cap with captivation device on each of the 3 inch conduit ports.

5.4.5 Description of alternate pierside connectivity installation schemes.

a. Table 7-XXII lists pierside cable topology configurations for various surface ship classes. Figures 7-12 and 7-13 schematically represent two different cable topology configurations, Installation C and Installation D.

b. Table 7-XXIII lists an alternative configuration for ships with no current pierside cable topology installed; however, these ships have a requirement to transfer engineering data (such as monitoring the propulsion plant). A limited, cable topology is installed to suit the intended application. Figure 7-14 schematically represents one potential (representative) cable topology configuration, Installation E.

c. Table 7-XXIV lists pierside cable topology configurations for submarine classes. Figure 7-15 schematically represents the current situation where no installed, permanent shipboard cable topology is present and “removable” equipment is used, Installation F. Figure 7-16 schematically represents either an interim or permanent cable topology configuration where no penetration is made to the hull pressure boundary, Installation G. Figure 7-17 schematically represents a permanent cable topology configuration with a penetration through the hull pressure boundary, Installation H.

TABLE 7-XXII. Cable configurations for various ship classes.

Cable Configuration Design	Change From Installation A or B Configuration	Class	Ship Classes Having This Configuration
Install A	None. - Umbilical routing scheme, nested ships: through-the-ship	T	LPD, LSD, AOE, AGF
Install B	None. - Umbilical routing scheme, nested ships: through-the-ship	T	FFG, DDG, CG, DD, MCM, MHC
Install C	Install A except: - Forward-to-aft versus port-to-starboard layout - No forward-to-aft cable run - Different hermaphroditic connector pin-out - IC box, forward & aft, mounted starboard side - Umbilical routing scheme, nested ships: None	S	CV, CVN
Install D	Install A except: - No port-to-starboard cable run - Different hermaphroditic connector pin-out - Umbilical routing scheme, nested ships: None	P	LHA, LHD LCC

Notes for table 7-XXII.

1. No forward-to-aft cable run = no cable run from “forward” to “aft” interconnection box for nested ship connectivity. Result is that through-the-ship, umbilical routing scheme cannot be used.

2. No port-to-starboard cable run = no cable run from “port” to “starboard” interconnection box for nested ship connectivity. Result is that through-the-ship, umbilical routing scheme cannot be used.

Source: https://assist.dla.mil -- Downloaded: 2016-12-10T08:13Z
Check the source to verify that this is the current version before use.

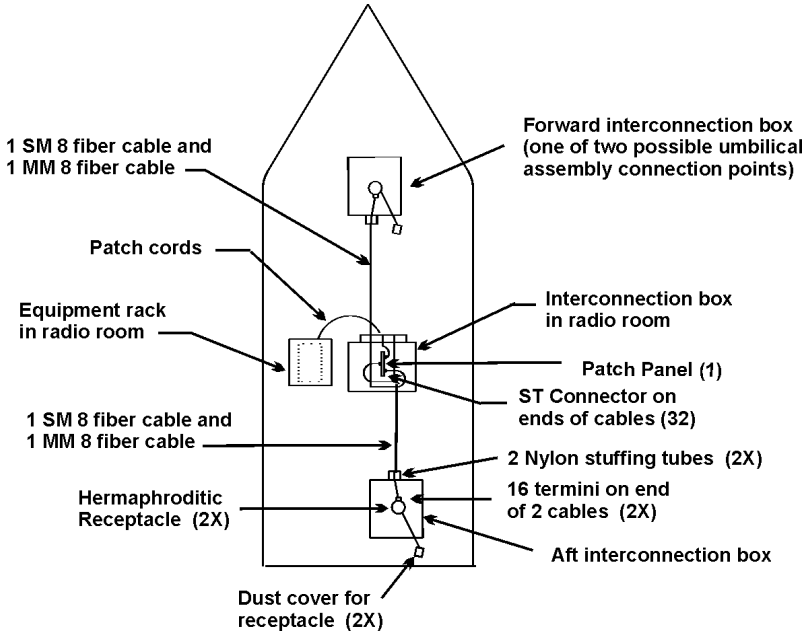

FIGURE 7-12. Installation “C” shipboard layout.

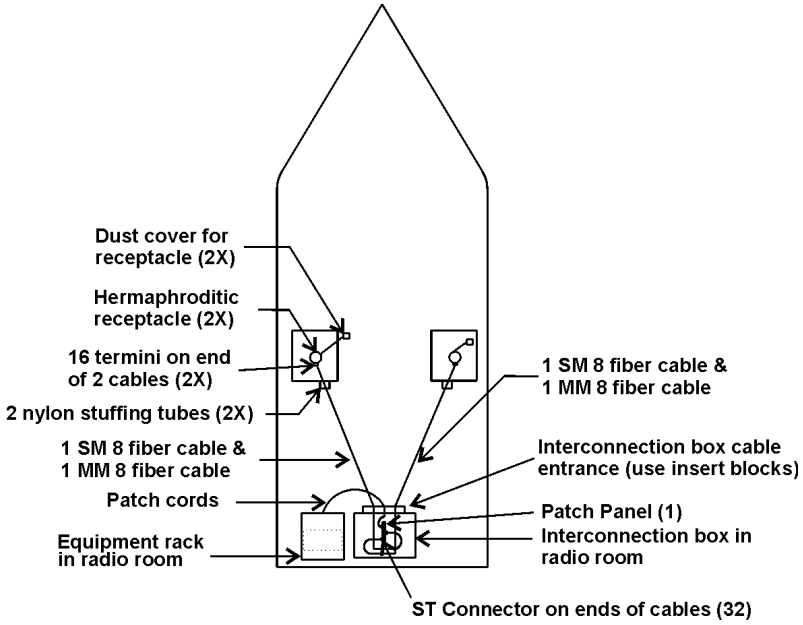

FIGURE 7-13. Installation “D” shipboard layout.

Source: https://assist.dla.mil -- Downloaded: 2016-12-10T08:13Z
Check the source to verify that this is the current version before use.

TABLE 7-XXIII. One cable configuration for ships with limited service.

Cable Configuration Design	Change From Installation A or B Configuration	Ship Classes Having This Configuration
Install E	One midship IC box with one hermaphroditic pigtail assembly, no redundant cable run from midship IC box to radio room - Umbilical routing scheme, nested ships: over-the-deck	No ADNS installed, transfer HM&E data only

Notes for table 7-XXIII.

1. HM&E = Hull, Mechanical & Electrical.
2. ADNS = Automated Digital Network System.

TABLE 7-XXIV. Cable configurations for submarine classes.

Cable Configuration Design	Change From Installation A or B Configuration	CLASS	Ship Classes Having This Configuration
Install F	No permanent shipboard, cable runs installed - Portable Pier Connectivity Suitcase - Connector converter box - Umbilical routing scheme, nested boats: over-the-deck	N/A	SSN, SSBN
Install G	Install B except: - No pressure hull penetration - Only one hermaphroditic receptacle - No port-to-starboard cabling - Different hermaphroditic connector pin-out - Umbilical assembly routed through a hatch and connected inside hull pressure boundary - Umbilical routing scheme, nested boats: over-the-deck	B	SSN, SSBN
Install H	Install B except: - 1 pressure hull penetration - Hull penetrator has 15 foot pigtail with ST connectors on ends - Only one hermaphroditic receptacle - Interconnection box located within 10 feet of hull penetrator - Hull penetrator-to-umbilical converter cable required - Umbilical assembly connected via converter cable - No port-to-starboard cabling - Different hermaphroditic connector pin-out - Umbilical assembly connected outside hull pressure boundary - Umbilical routing scheme, nested boats: over-the-deck	B	SSN, SSBN

Notes for table 7-XXIV.

1. No port-to-starboard cabling = no cable run or jumper set at hatch (hermaphroditic receptacle) interconnection box for nested ship connectivity. Result is that through-the-ship, umbilical routing scheme cannot be used with nested boats.

2. Connector converter box (hermaphroditic-to-ST) interfaces the hermaphroditic cable plug on the umbilical assembly with the ST-to-ST jumper going to the portable WAN pier connectivity suitcase.

Source: https://assist.dla.mil -- Downloaded: 2016-12-10T08:13Z
Check the source to verify that this is the current version before use.

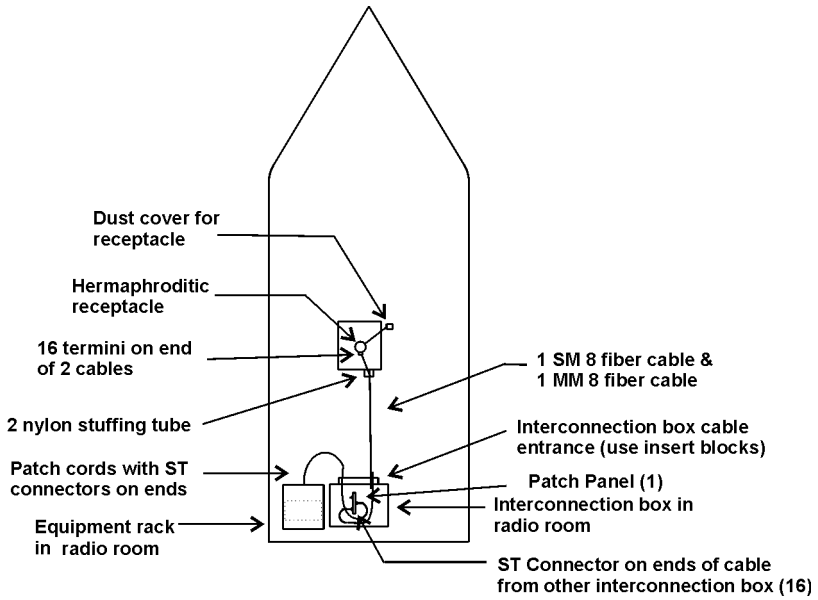

FIGURE 7-14. Installation “E” shipboard layout.

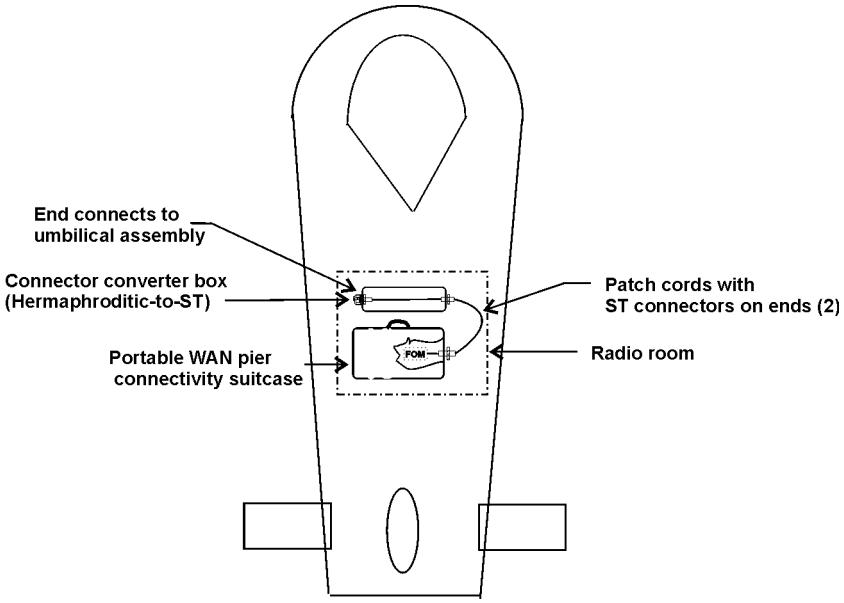

FIGURE 7-15. Installation “F” shipboard layout.

Source: https://assist.dla.mil -- Downloaded: 2016-12-10T08:13Z
Check the source to verify that this is the current version before use.

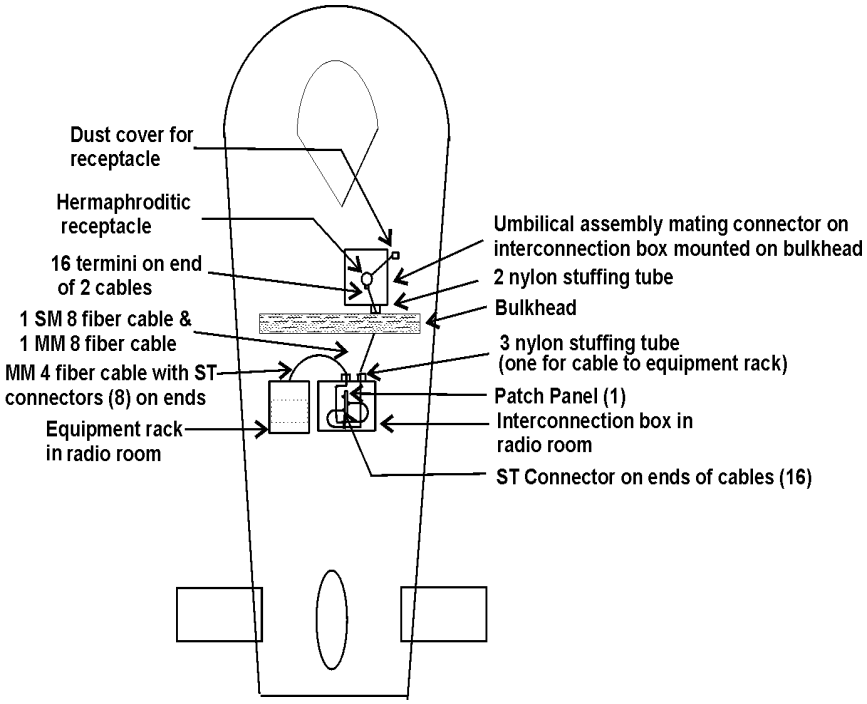

FIGURE 7-16. Installation "G" shipboard layout.

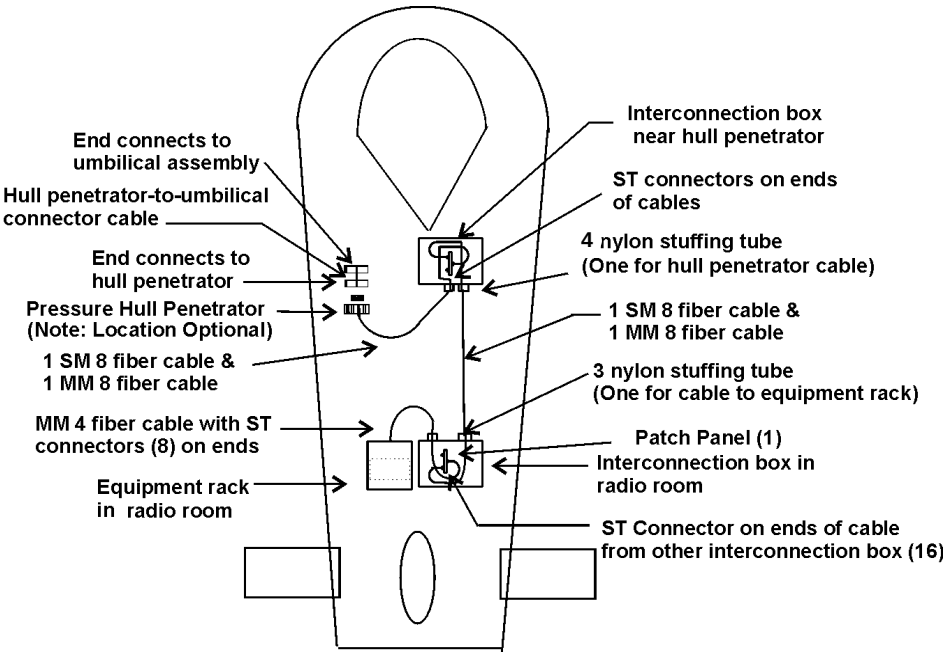

FIGURE 7-17. Installation "H" shipboard layout.

Source: https://assist.dla.mil -- Downloaded: 2016-12-10T08:13Z
Check the source to verify that this is the current version before use.

5.4.6 Routing for port to starboard cable runs.

a. Installation A. Route directly from port interconnection box to starboard interconnection box.

b. Installation B. Use jumpers internal to interconnection box to simulate port to starboard routing.

5.4.7 Shipboard interconnection box footprint and mounting dimensions.

a. MIL-I-24728/1 interconnection box footprint.

(1) Length (across): 343 mm (13.5 in) maximum.
(2) Width (vertical): 457 mm (18.0 in) maximum.
(3) Depth: 195 mm (7.75 in) maximum.

b. MIL-I-24728/1 interconnection box mounting dimensions. Mounting dimensions are shown in figure 7-18.

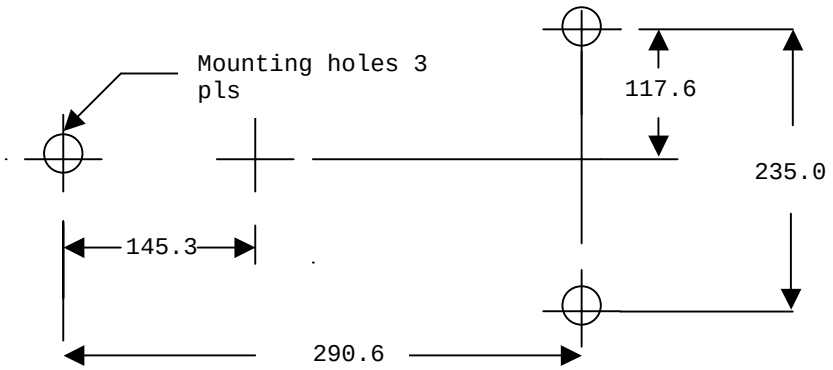

mm	in
117.6	4.63
145.3	5.72
235.0	9.25
290.6	11.44

Notes:
1. Dimensions are in millimeters. English equivalents are for information only.
2. Unless otherwise specified, tolerance is ± 0.3 mm (± 0.01 in).
3. Mounting hole shall accommodate a M12.7 X 1.95 (0.5-13) bolt.

FIGURE 7-18. Shipboard interconnection box mounting dimensions.

5.5 Pier interconnection box placement guidelines.

5.5.1 Pier configuration. Select potential locations for mounting the interconnection box based on type of pier configuration and availability of utility enclosures at the pier (see table 7-XXV).

Source: https://assist.dla.mil -- Downloaded: 2016-12-10T08:13Z
Check the source to verify that this is the current version before use.

TABLE 7-XXV. Pier configuration.

Pier Configuration	Interconnection box Location
Single deck pier with utility trench	a. Preference. Mount inside existing utility enclosure. b. Alternate. Mount in semi protected area with easy reach for connection & cleaning. c. Less desirable. Mount on side of trench just below deck.
Single deck pier with service utility enclosure available.	a. Preference. Mount inside utility enclosure. b. Less desirable. Attach to utility enclosure outside surface.
Single deck pier with no available utility trench or service utility enclosure	a. Preference. Install utility enclosure and mount inside. b. Alternate. Mount low on surface of pier deck, away from any traffic
Double deck pier	Mount on lower pier

NOTE: Keep any unprotected interconnection box mounted on the pier deck low and away from any traffic.

NOTE: Plan for flexibility with pier interconnection box locations. More than one interconnection box may be placed along each pier to service a mixture of ship classes, docking configurations, etc.

5.5.2 Cleanliness considerations. Cleanliness is a prime consideration to reduce termini cleaning requirements with this fiber optic connection at the hermaphroditic receptacle. Select a location for the pier interconnection box with the hermaphroditic receptacle that is not directly exposed to the weather or excessive dirt/dust. When feasible, it is preferable to locate the fiber optic interconnection box inside another enclosure. Where no existing enclosure is available, a separate enclosure on the pier can be installed into which the interconnection box is placed. A 3 inch conduit fitting can be installed on the side of the enclosure adjacent to the hermaphroditic receptacle on the interconnection box. This conduit fitting would permit easy access to the hermaphroditic receptacle. A 3 inch conduit cap should be included to cover the conduit opening when an umbilical assembly is not connected to the hermaphroditic receptacle.

5.5.3 Pier interconnection box footprint and mounting dimensions.

a. NAVSEA DWG 7325761, item 6003 AK interconnection box footprint.

(1) Length (across): 381 mm (15.0 in) maximum
(2) Width (vertical): 495 mm (19.5 in) maximum
(3) Depth: 222 mm (8.75 in) maximum

b. NAVSEA DWG 7325761, item 6003AK interconnection box mounting dimensions. Mounting dimensions are shown in figure 7-19.

Source: https://assist.dla.mil -- Downloaded: 2016-12-10T08:13Z
Check the source to verify that this is the current version before use.

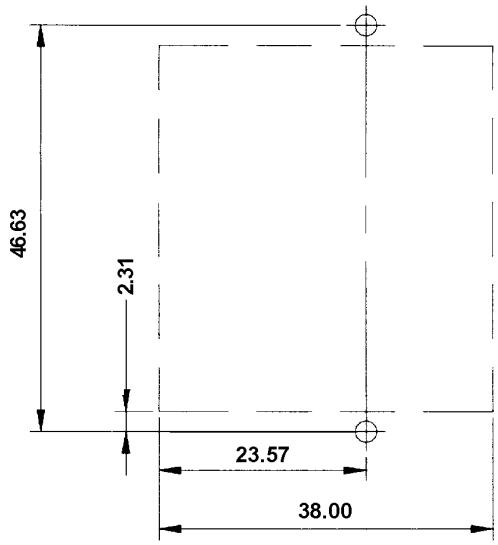

cm	in
2.31	0.91
23.57	9.28
38.00	14.96
46.63	18.36

Notes:

1. Dimensions are in centimeters. English equivalents are for information only.
2. Unless otherwise specified, tolerance is ± 0.03 cm (± 0.01 in).
3. Mounting hole shall accommodate a 0.25-20 bolt.
4. Mounting holes are offset from interconnection box center to permit installation after a conduit is installed.
5. Use stabilizer bracket only for pole mounting or if placing on a less substantial support such as dry wall.

FIGURE 7-19. Mounting dimensions for item 6003AK pier interconnection box.

c. NAVSEA DWG 7325761, item 6003AE interconnection box footprint.

(1) Length (across): 432 mm (17.00 in) maximum
(2) Width (vertical): 413 mm (16.25 in) maximum
(3) Depth: 146 mm (5.75 in) maximum

d. NAVSEA DWG 7325761, item 6003AE interconnection box mounting dimensions. Mounting dimensions are shown in figure 7-20.

Source: https://assist.dla.mil -- Downloaded: 2016-12-10T08:13Z
Check the source to verify that this is the current version before use.

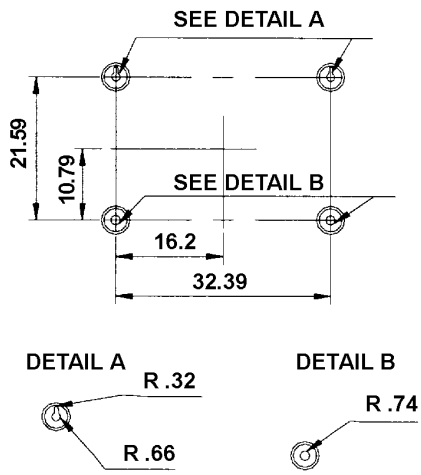

cm	in
0.32	0.13
0.66	0.26
0.74	0.29
10.79	4.25
16.20	6.38
21.59	8.50
32.39	12.75

Notes:
1. Dimensions are in centimeters. English equivalents are for information only.
2. Unless otherwise specified, tolerance is ± 0.03 cm (± 0.01 in).
3. Mounting hole shall accommodate a 0.25-20 bolt.

FIGURE 7-20. Mounting dimensions for item 6003AE pier interconnection box.

5.5.4 Pier interconnection box usage (sealed versus vented configuration).

a. NAVSEA DWG 7325761, item 6003AK interconnection box. This interconnection box is a sealed interconnection box configuration and offers protection from external environment penetration.

(1) Usage. This interconnection box is recommended for general usage.

(2) Mounting configuration. Mounting dimensions in figure 7-19 does not include usage of the stabilizer bracket. The stabilizer bracket allows the interconnection box to be mounted on a pole or on a less substantial backing such as dry wall. Interconnection box mounted inside a utility enclosure is done without the stabilizer bracket.

b. NAVSEA Drawing 7325761, item 6003AE interconnection box. This interconnection box is a vented interconnection box configuration and should be limited to locations that offer protection from wind gusts and dust/dirt penetration. Mounting dimensions are shown in figure 7-20.

(1) Usage. This interconnection box should be restricted to a reasonably clean environment.

Source: https://assist.dla.mil -- Downloaded: 2016-12-10T08:13Z
Check the source to verify that this is the current version before use.

5.6 Umbilical assembly routing schemes with ships nested at a berth.

5.6.1 Types of routing schemes. Two different schemes may be employed for umbilical assembly routing from the pier to the ships when the ships are in a nested configuration. The umbilical assembly is a 152 m (500 ft) fiber optic cable on a three flanged cable reel with two fiber optic connectors, one on each end. This umbilical assembly is used to connect the ship to the pier for shore communications while in port. No more than three ships are to be nesting at any one berth.

a. Over-the-deck. One cable routing scheme is known as over-the-deck (see figure 7-21). In this scheme, a separate umbilical assembly is run from the pier to each ship. The umbilical assembly to the middle ship in the nest is routed over the ship docked at the pier. Similarly, the umbilical assembly to the outermost ship in the nest is routed over the other two ships.

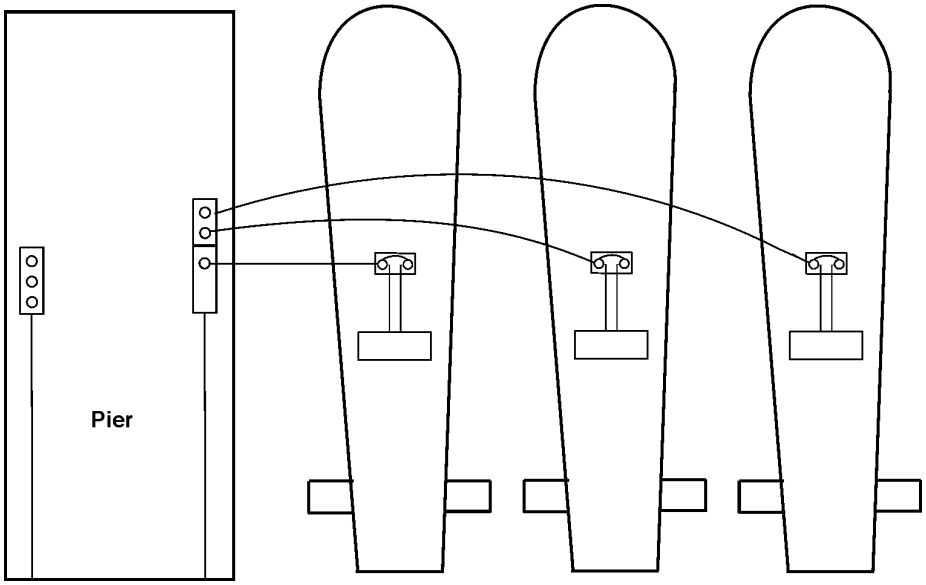

FIGURE 7-21. Over-the-deck routing scheme.

b. Through-the-ship. A second cable routing scheme is known as through-the-ship (see figure 7-22). An umbilical cable is routed from the pier to the ship docked at the pier. A second umbilical assembly is routed from the pierside, docked ship to the middle ship in the nest. A third umbilical assembly is routed from the middle ship to the outermost ship in the nest. This scheme requires that the pierside connectivity cable assemblies support through-the-ship routing and that interface equipment have a robust optical loss budget. This scheme also requires that there is an exterior location on two of the three ships in the nest to place the umbilical assembly cable reel with the unspooled cable length while in use.

Source: https://assist.dla.mil -- Downloaded: 2016-12-10T08:13Z
Check the source to verify that this is the current version before use.

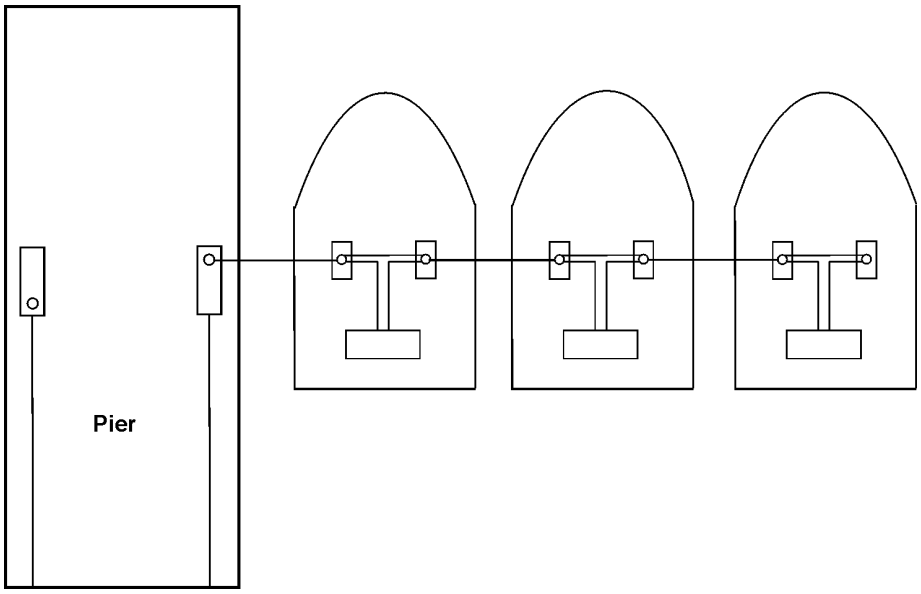

FIGURE 7-22. Through-the-ship routing scheme.

5.6.2 Surface ship piers. The through-the-ship cable routing scheme for the umbilical assembly is specified for surface ships in a nested configuration.

5.6.3 Submarine piers. The over-the-ship cable routing scheme for the umbilical assembly is specified for submarines in a nested configuration.

NOTE: Small surface craft (patrol boats, etc.) may elect to use the over-the-ship routing scheme.

5.7 Number of pigtail assemblies per pier interconnection box.

5.7.1 Pier interconnection box for through-the-ship nesting or no nesting. The interconnection box is to contain one pigtail assembly. One pigtail assembly per interconnection box permits a through-the-ship cable routing scheme for the umbilical assembly.

5.7.2 Pier interconnection box for over-the-deck nesting. The interconnection box is to contain three pigtail assemblies. This quantity of pigtail assemblies per interconnection box permits an over-the-deck cable routing scheme for the umbilical assembly.

5.8 Pier interconnection box patch panel designations.

5.8.1 NAVSEA DWG 7325761, item 6003AK interconnection box. There are no designations inscribed on the patch panel. The interconnection box cover has a label with designations for the patch panel layout (see figure 7-23).

Source: https://assist.dla.mil -- Downloaded: 2016-12-10T08:13Z
Check the source to verify that this is the current version before use.

	A	B	C
1	O	O	O
2	O	O	O
3	O	O	O
4	O	O	O
5	O	O	O
6	O	O	O
7	X	X	X
8	X	X	X

1	O	O	O
2	O	O	O
3	O	O	O
4	O	O	O
5	O	O	O
6	O	O	O
7	X	X	X
8	X	X	X
	D	E	F

<- Outside Inside ->

O = Position available on patch panel.
X = Position not available on patch panel (6 ports per patch panel, not 8. Six patch panels – A through F).

FIGURE 7-23. Patch panel designations for item 6003AK pier interconnection box.

5.8.2 NAVSEA Drawing 7325761, item 6003AE interconnection box. Patch panel designations for the ST-to-ST adapter locations are silk screened onto the patch panel (see figure 7-24).

1	2	3	4
5	6	7	8
9	10	11	12
13	14	15	16
17	18	19	20
21	22	23	24

<- Outside inside ->

FIGURE 7-24. Patch panel designations for item 6003AE pier interconnection box.

5.9 Pier interconnection box patching positions.

5.9.1 Pier patch panel layout. Patch panel layout is provided for the NAVSEA Drawing 7325761, item 6003AK interconnection box. There are six patch panels, designated A through F (see figure 7-23). Each patch panel consists of one column containing six ports. Patch panel layout is as follows:

a. Pigtail assembly ST connectors, for the ship docked at pierside (ship 1), are placed on the outermost patch panels (patch panels A and D).

b. Pigtail assembly ST connectors, for the middle ship (ship 2), are placed on the center patch panels (patch panels B and E).

c. Pigtail assembly connectors, for the outermost ship in the nest (ship 3), are placed on the most inward patch panels (patch panels C and F).

d. When one pigtail assembly is used for the through-the-ship umbilical assembly routing scheme, connect the pigtail assembly ST connectors to the corresponding ports for each of the three ships (see table 7-XXVII, 7-XXIX or 7-XXXII).

Source: https://assist.dla.mil -- Downloaded: 2016-12-10T08:13Z
Check the source to verify that this is the current version before use.

5.9.2 Configurations. The ST connectors from the pigtail assembly are patched into the applicable ST-to-ST adapter patch panel positions depending on the network configuration installed on the ship. The network configurations (versions) are identified in 5.3.1. The subdivision (class) for type/level of nested ship support is described in 5.3.1.1 through. 5.3.1.4. Table 7-XXVI lists the network configurations with the subdivisions for class, ship class and type of nesting. The subdivision is used to identify the pinout, patching positions and pigtail assembly designations (1P through 6J) for the pier interconnection box with the pigtail assembly. These pinouts, etc. are shown in tables 7-XXVII through 7-XXXII.

TABLE 7-XXVI. Network configuration versions.

Version	Class	Network Configuration Designation	Ship Classes	Ship Nesting	Pinout Table
I,III	T,S,P	AN/USQ-144B(V)2 or AN/USQ-144D(V)2	AOE,LPD,LSD,AGF, FFG,DDG,DD,CG, MCM,MHC,CV,CVN, LHA,LHD,LCC	through-the-ship/ none	7-XXVII
I,III	B	To Be Determined (TBD)	TBD	over-the-deck	7-XXVIII
II	T,S,P	AN/USQ-144C(V)2	AOE,LPD,LSD,AGF, FFG,DDG,DD,CG, MCM,MHC,CV,CVN, LHA,LHD,LCC	through-the-ship/ none	7-XXIX
II	B	TBD	TBD	over-the-deck	7-XXX
IV	T,S,P	Future	TBD	through-the-ship/ none	7-XXXI
IV	B	Future	TBD	over-the-deck	7-XXXII
V	B	AN/USQ-144A(V)3	SSN, SSBN	over-the-deck	7-XXVIII

NOTE: The pigtail assembly and the umbilical assembly for Version IV must be configured with 6 multimode and 6 single mode optical fibers.

NOTE: The following abbreviations are used in tables 7-XXVII through 7-XXXII:
Pigtail 3 = interconnection box hermaphroditic receptacle for third (outermost) ship in the nest.
Pigtail 3-3P = hermaphroditic receptacle position 3P.
N/C = terminated, but not connected.
P/P = patch panel in pier interconnection box.
P/P-4C = ST-to-ST adapter port position 4C on the patch panel.

5.9.3 Alternate pier patch panel layout. This patch panel layout is provided for the NAVSEA Drawing 7325761, item 6003AE interconnection box. There is one patch panel with 24 ports, designated ports 1 through 24 (see figure 7-24). This layout covers patch panel configurations for Versions I and II only. Patching is set up for the multimode ST connectors on the pigtail assembly. Single mode ST connectors are not connected. Patch panel layout is as follows:

a. Pigtail assembly connections, for the ship docked at pierside (ship 1), are placed on rows 1 and 2 (port 1 to 8). Designate port 1 for 1P, port 2 for 1J, port 3 for 2P, etc.

b. Pigtail assembly connections, for the middle ship (ship 2), are placed on rows 3 and 4 (ports 9 to 16). Designate port 9 for 1P, port 10 for 1J, port 11 for 2P, etc.

c. Pigtail assembly connections, for the outermost ship in the nest (ship 3), are placed on rows 5 and 6 (ports 17 to 24). Designate port 17 for 1P, port 18 for 1J, port 19 for 2P, etc.

Source: https://assist.dla.mil -- Downloaded: 2016-12-10T08:13Z
Check the source to verify that this is the current version before use.

d. When one pigtail assembly is used for the through-the-ship umbilical assembly routing scheme, connect the pigtail assembly ST connectors to the corresponding ports for that ship. For example, ST connector on Pigtail-3P (see table 7-XXVII) is designated for ship 3 and is connected to port 21 for a Version I configuration. Table 7-XXVII or table 7-XXVII may be used for guidance.

TABLE 7-XXVII. Pier patch panel connections for versions I and III network configurations, classes T, S, P nested ship support.

Unit A Term. No.	Unit B Term. No.	CABLE TYPE & Number		Function	Fiber Designation
Pigtail-1P	P/P-1A	MULTIMODE	1P	TX (Ship 1)	Determined by site
Pigtail-1J	P/P-2A	MULTIMODE	1J	RX (Ship 1)	Determined by site
Pigtail-2P	P/P-1B	MULTIMODE	2P	TX (Ship 2)	Determined by site
Pigtail-2J	P/P-2B	MULTIMODE	2J	RX (Ship 2)	Determined by site
Pigtail-3P	P/P-1C	MULTIMODE	3P	TX (Ship 3)	Determined by site
Pigtail-3J	P/P-2C	MULTIMODE	3J	RX (Ship 3)	Determined by site
Pigtail-4P	P/P-1D	MULTIMODE	4P	Pass Thru	Determined by site
Pigtail-4J	P/P-2D	MULTIMODE	4J	Pass Thru	Determined by site
Pigtail-5P	P/P-3D	SINGLE MODE	5P	TX (Pass Thru)	Determined by site
Pigtail-5J	P/P-4D	SINGLE MODE	5J	RX (Pass Thru)	Determined by site
Pigtail-6P	P/P-5E	SINGLE MODE	6P	TX (Pass Thru)	Determined by site
Pigtail-6J	P/P-6E	SINGLE MODE	6J	RX (Pass Thru)	Determined by site

TABLE 7-XXVIII. Pier patch panel connections for versions I, III and V network configurations, class B nested ship support.

Unit A Term. No.	Unit B Term. No.	CABLE TYPE & Number		Function	Fiber Designation
Pigtail 1-1P	P/P-1A	MULTIMODE	1P	TX (Ship 1)	Determined by site
Pigtail 1-1J	P/P-2A	MULTIMODE	1J	RX (Ship 1)	Determined by site
Pigtail 1-2P	P/P-3A	MULTIMODE	2P	Spare	Determined by site
Pigtail 1-2J	P/P-4A	MULTIMODE	2J	Spare	Determined by site
Pigtail 1-3P	P/P-5A	MULTIMODE	3P	Spare	Determined by site
Pigtail 1-3J	P/P-6A	MULTIMODE	3J	Spare	Determined by site

Source: https://assist.dla.mil -- Downloaded: 2016-12-10T08:13Z
Check the source to verify that this is the current version before use.

TABLE 7-XXVIII. Pier patch panel connections for versions I, III and V network configurations, class B nested ship support – continued.

Unit A Term. No.	Unit B Term. No.	CABLE TYPE & Number		Function	Fiber Designation
Pigtail 1-4P	P/P-1D	MULTIMODE	4P	Spare	Determined by site
Pigtail 1-4J	P/P-2D	MULTIMODE	4J	Spare	Determined by site
Pigtail 1-5P	P/P-3D	SINGLE MODE	5P	TX (Pass Thru)	Determined by site
Pigtail 1-5J	P/P-4D	SINGLE MODE	5J	RX (Pass Thru)	Determined by site
Pigtail 1-6P	P/P-5D	SINGLE MODE	6P	Spare	Determined by site
Pigtail 1-6J	P/P-6D	SINGLE MODE	6J	Spare	Determined by site
Pigtail 2-1P	P/P-1B	MULTIMODE	1P	TX (Ship 2)	Determined by site
Pigtail 2-1J	P/P-2B	MULTIMODE	1J	RX (Ship 2)	Determined by site
Pigtail 2-2P	P/P-3B	MULTIMODE	2P	Spare	Determined by site
Pigtail 2-2J	P/P-4B	MULTIMODE	2J	Spare	Determined by site
Pigtail 2-3P	P/P-5B	MULTIMODE	3P	Spare	Determined by site
Pigtail 2-3J	P/P-6B	MULTIMODE	3J	Spare	Determined by site
Pigtail 2-4P	P/P-1E	MULTIMODE	4P	Spare	Determined by site
Pigtail 2-4J	P/P-2E	MULTIMODE	4J	Spare	Determined by site
Pigtail 2-5P	P/P-3E	SINGLE MODE	5P	Spare	Determined by site
Pigtail 2-5J	P/P-4E	SINGLE MODE	5J	Spare	Determined by site
Pigtail 2-6P	P/P-5E	SINGLE MODE	6P	TX (Pass Thru)	Determined by site
Pigtail 2-6J	P/P-6E	SINGLE MODE	6J	RX (Pass Thru)	Determined by site
Pigtail 3-1P	P/P-1C	MULTIMODE	1P	TX (Ship 3)	Determined by site
Pigtail 3-1J	P/P-2C	MULTIMODE	1J	RX (Ship 3)	Determined by site
Pigtail 3-2P	P/P-3C	MULTIMODE	2P	Spare	Determined by site
Pigtail 3-2J	P/P-4C	MULTIMODE	2J	Spare	Determined by site

Source: https://assist.dla.mil -- Downloaded: 2016-12-10T08:13Z
Check the source to verify that this is the current version before use.

TABLE 7-XXVIII. Pier patch panel connections for versions I, III and V network configurations, class B nested ship support – continued.

Unit A Term. No.	Unit B Term. No.	CABLE TYPE & Number		Function	Fiber Designation
Pigtail 3-3P	P/P-5C	MULTIMODE	3P	Spare	Determined by site
Pigtail 3-3J	P/P-6C	MULTIMODE	3J	Spare	Determined by site
Pigtail 3-4P	P/P-1F	MULTIMODE	4P	Spare	Determined by site
Pigtail 3-4J	P/P-2F	MULTIMODE	4J	Spare	Determined by site
Pigtail 3-5P	P/P-3F	SINGLE MODE	5P	Spare	Determined by site
Pigtail 3-5J	P/P-4F	SINGLE MODE	5J	Spare	Determined by site
Pigtail 3-6P	P/P-5F	SINGLE MODE	6P	Spare	Determined by site
Pigtail 3-6J	P/P-6F	SINGLE MODE	6J	Spare	Determined by site

TABLE 7-XXIX. Pier patch panel connections for version II network configuration, classes T, S, P nested ship support.

Unit A Term. No.	Unit B Term. No.	CABLE TYPE & Number		Function	Fiber Designation
Pigtail-1P	P/P-1E	MULTIMODE	1P	TX (Ship 2)	Determined by site
Pigtail-1J	P/P-2E	MULTIMODE	1J	RX (Ship 2)	Determined by site
Pigtail-2P	P/P-1F	MULTIMODE	2P	TX (Ship 3)	Determined by site
Pigtail-2J	P/P-2F	MULTIMODE	2J	RX (Ship 3)	Determined by site
Pigtail-3P	P/P-1A	MULTIMODE	3P	Spare	Determined by site
Pigtail-3J	P/P-2A	MULTIMODE	3J	Spare	Determined by site
Pigtail-4P	P/P-1D	MULTIMODE	4P	TX (Ship 1)	Determined by site
Pigtail-4J	P/P-2D	MULTIMODE	4J	RX (Ship 1)	Determined by site
Pigtail-5P	P/P-3D	SINGLE MODE	5P	TX (Pass Thru)	Determined by site
Pigtail-5J	P/P-4D	SINGLE MODE	5J	RX (Pass Thru)	Determined by site
Pigtail-6P	P/P-5E	SINGLE MODE	6P	TX (Pass Thru)	Determined by site
Pigtail-6J	P/P-6E	SINGLE MODE	6J	RX (Pass Thru)	Determined by site

Source: https://assist.dla.mil -- Downloaded: 2016-12-10T08:13Z
Check the source to verify that this is the current version before use.

TABLE 7-XXX. Pier patch panel connections for version II network configuration, class B nested ship support.

Unit A Term. No.	Unit B Term. No.	CABLE TYPE & Number		Function	Fiber Designation
Pigtail 1-1P	P/P-1A	MULTIMODE	1P	Spare	Determined by site
Pigtail 1-1J	P/P-2A	MULTIMODE	1J	Spare	Determined by site
Pigtail 1-2P	P/P-3A	MULTIMODE	2P	Spare	Determined by site
Pigtail 1-2J	P/P-4A	MULTIMODE	2J	Spare	Determined by site
Pigtail 1-3P	P/P-5A	MULTIMODE	3P	Spare	Determined by site
Pigtail 1-3J	P/P-6A	MULTIMODE	3J	Spare	Determined by site
Pigtail 1-4P	P/P-1D	MULTIMODE	4P	TX (Ship 1)	Determined by site
Pigtail 1-4J	P/P-2D	MULTIMODE	4J	RX (Ship 1)	Determined by site
Pigtail 1-5P	P/P-3D	SINGLE MODE	5P	TX (Pass Thru)	Determined by site
Pigtail 1-5J	P/P-4D	SINGLE MODE	5J	RX (Pass Thru)	Determined by site
Pigtail 1-6P	P/P-5D	SINGLE MODE	6P	Spare	Determined by site
Pigtail 1-6J	P/P-6D	SINGLE MODE	6J	Spare	Determined by site
Pigtail 2-1P	P/P-1B	MULTIMODE	1P	Spare	Determined by site
Pigtail 2-1J	P/P-2B	MULTIMODE	1J	Spare	Determined by site
Pigtail 2-2P	P/P-3B	MULTIMODE	2P	Spare	Determined by site
Pigtail 2-2J	P/P-4B	MULTIMODE	2J	Spare	Determined by site
Pigtail 2-3P	P/P-5B	MULTIMODE	3P	Spare	Determined by site
Pigtail 2-3J	P/P-6B	MULTIMODE	3J	Spare	Determined by site
Pigtail 2-4P	P/P-1E	MULTIMODE	4P	TX (Ship 2)	Determined by site
Pigtail 2-4J	P/P-2E	MULTIMODE	4J	RX (Ship 2)	Determined by site
Pigtail 2-5P	P/P-3E	SINGLE MODE	5P	Spare	Determined by site
Pigtail 2-5J	P/P-4E	SINGLE MODE	5J	Spare	Determined by site
Pigtail 2-6P	P/P-5E	SINGLE MODE	6P	TX (Pass Thru)	Determined by site
Pigtail 2-6J	P/P-6E	SINGLE MODE	6J	RX (Pass Thru)	Determined by site

Source: https://assist.dla.mil -- Downloaded: 2016-12-10T08:13Z
Check the source to verify that this is the current version before use.

TABLE 7-XXX. Pier patch panel connections for version II network configuration, class B nested ship support - continued.

Unit A Term. No.	Unit B Term. No.	CABLE TYPE & Number		Function	Fiber Designation
Pigtail 3-1P	P/P-1C	MULTIMODE	1P	Spare	Determined by site
Pigtail 3-1J	P/P-2C	MULTIMODE	1J	Spare	Determined by site
Pigtail 3-2P	P/P-3C	MULTIMODE	2P	Spare	Determined by site
Pigtail 3-2J	P/P-4C	MULTIMODE	2J	Spare	Determined by site
Pigtail 3-3P	P/P-5C	MULTIMODE	3P	Spare	Determined by site
Pigtail 3-3J	P/P-6C	MULTIMODE	3J	Spare	Determined by site
Pigtail 3-4P	P/P-1F	MULTIMODE	4P	TX (Ship 3)	Determined by site
Pigtail 3-4J	P/P-2F	MULTIMODE	4J	RX (Ship 3)	Determined by site
Pigtail 3-5P	P/P-3F	SINGLE MODE	5P	Spare	Determined by site
Pigtail 3-5J	P/P-4F	SINGLE MODE	5J	Spare	Determined by site
Pigtail 3-6P	P/P-5F	SINGLE MODE	6P	Spare	Determined by site
Pigtail 3-6J	P/P-6F	SINGLE MODE	6J	Spare	Determined by site

TABLE 7-XXXI. Pier patch panel connections for version IV network configuration, classes T, S, P nested ship support.

Unit A Term. No.	Unit B Term. No.	CABLE TYPE & Number		Function	Fiber Designation
Pigtail-1P	P/P-1A	MULTIMODE	1P	TX (Ship 1)	Determined by site
Pigtail-1J	P/P-2A	MULTIMODE	1J	RX (Ship 1)	Determined by site
Pigtail-2P	P/P-1B	MULTIMODE	2P	TX (Ship 2)	Determined by site
Pigtail-2J	P/P-2B	MULTIMODE	2J	RX (Ship 2)	Determined by site
Pigtail-3P	P/P-1C	MULTIMODE	3P	TX (Ship 3)	Determined by site
Pigtail-3J	P/P-2C	MULTIMODE	3J	RX (Ship 3)	Determined by site
Pigtail-4P	P/P-1D	SINGLE MODE	4P	TX (Ship 1)	Determined by site
Pigtail-4J	P/P-2D	SINGLE MODE	4J	RX (Ship 1)	Determined by site

Source: https://assist.dla.mil -- Downloaded: 2016-12-10T08:13Z
Check the source to verify that this is the current version before use.

TABLE 7-XXXI. Pier patch panel connections for version IV network configuration, classes T, S, P nested ship support - continued.

Unit A Term. No.	Unit B Term. No.	CABLE TYPE & Number		Function	Fiber Designation
Pigtail-5P	P/P-1E	SINGLE MODE	5P	TX (Ship 2)	Determined by site
Pigtail-5J	P/P-2E	SINGLE MODE	5J	RX (Ship 2)	Determined by site
Pigtail-6P	P/P-1F	SINGLE MODE	6P	TX (Ship 3)	Determined by site
Pigtail-6J	P/P-2F	SINGLE MODE	6J	RX (Ship 3)	Determined by site

TABLE 7-XXXII. Pier patch panel connections for version IV network configuration, class B nested ship support.

Unit A Term. No.	Unit B Term. No.	CABLE TYPE & Number		Function	Fiber Designation
Pigtail 1-1P	P/P-1A	MULTIMODE	1P	TX (Ship 1)	Determined by site
Pigtail 1-1J	P/P-2A	MULTIMODE	1J	RX (Ship 1)	Determined by site
Pigtail 1-2P	P/P-3A	MULTIMODE	2P	Spare	Determined by site
Pigtail 1-2J	P/P-4A	MULTIMODE	2J	Spare	Determined by site
Pigtail 1-3P	P/P-5A	MULTIMODE	3P	Spare	Determined by site
Pigtail 1-3J	P/P-6A	MULTIMODE	3J	Spare	Determined by site
Pigtail 1-4P	P/P-1D	SINGLE MODE	4P	TX (Ship 1)	Determined by site
Pigtail 1-4J	P/P-2D	SINGLE MODE	4J	RX (Ship 1)	Determined by site
Pigtail 1-5P	P/P-3D	SINGLE MODE	5P	Spare	Determined by site
Pigtail 1-5J	P/P-4D	SINGLE MODE	5J	Spare	Determined by site
Pigtail 1-6P	P/P-5D	SINGLE MODE	6P	Spare	Determined by site
Pigtail 1-6J	P/P-6D	SINGLE MODE	6J	Spare	Determined by site
Pigtail 2-1P	P/P-1B	MULTIMODE	1P	TX (Ship 2)	Determined by site
Pigtail 2-1J	P/P-2B	MULTIMODE	1J	RX (Ship 2)	Determined by site
Pigtail 2-2P	P/P-3B	MULTIMODE	2P	Spare	Determined by site

Source: https://assist.dla.mil -- Downloaded: 2016-12-10T08:13Z
Check the source to verify that this is the current version before use.

TABLE 7-XXXII. Pier patch panel connections for version IV network configuration, class B nested ship support – continued.

Unit A Term. No.	Unit B Term. No.	CABLE TYPE & Number		Function	Fiber Designation
Pigtail 2-2J	P/P-4B	MULTIMODE	2J	Spare	Determined by site
Pigtail 2-3P	P/P-5B	MULTIMODE	3P	Spare	Determined by site
Pigtail 2-3J	P/P-6B	MULTIMODE	3J	Spare	Determined by site
Pigtail 2-4P	P/P-1E	SINGLE MODE	4P	TX (Ship 2)	Determined by site
Pigtail 2-4J	P/P-2E	SINGLE MODE	4J	RX (Ship 2)	Determined by site
Pigtail 2-5P	P/P-3E	SINGLE MODE	5P	Spare	Determined by site
Pigtail 2-5J	P/P-4E	SINGLE MODE	5J	Spare	Determined by site
Pigtail 2-6P	P/P-5E	SINGLE MODE	6P	Spare	Determined by site
Pigtail 2-6J	P/P-6E	SINGLE MODE	6J	Spare	Determined by site
Pigtail 3-1P	P/P-1C	MULTIMODE	1P	TX (Ship 3)	Determined by site
Pigtail 3-1J	P/P-2C	MULTIMODE	1J	RX (Ship 3)	Determined by site
Pigtail 3-2P	P/P-3C	MULTIMODE	2P	Spare	Determined by site
Pigtail 3-2J	P/P-4C	MULTIMODE	2J	Spare	Determined by site
Pigtail 3-3P	P/P-5C	MULTIMODE	3P	Spare	Determined by site
Pigtail 3-3J	P/P-6C	MULTIMODE	3J	Spare	Determined by site
Pigtail 3-4P	P/P-1F	SINGLE MODE	4P	TX (Ship 3)	Determined by site
Pigtail 3-4J	P/P-2F	SINGLE MODE	4J	RX (Ship 3)	Determined by site
Pigtail 3-5P	P/P-3F	SINGLE MODE	5P	Spare	Determined by site
Pigtail 3-5J	P/P-4F	SINGLE MODE	5J	Spare	Determined by site
Pigtail 3-6P	P/P-5F	SINGLE MODE	6P	Spare	Determined by site
Pigtail 3-6J	P/P-6F	SINGLE MODE	6J	Spare	Determined by site

Source: https://assist.dla.mil -- Downloaded: 2016-12-10T08:13Z
Check the source to verify that this is the current version before use.

5.10 Description of alternate pierside connectivity installation schemes.

5.10.1 Loss budget requirement. An optical loss budget analysis was performed in accordance with MIL-STD-2052, TIA-626 and TIA-559 for typical, pierside, fiber optic topologies and typical ship-to-shore active interfaces.

5.10.2 Cable length requirements. Cable length/loss budget calculations have been performed for the typical ship and pier configurations shown in figure 7-25, 7-26 and 7-27. The length of the cable run from the pier riser to the shore building with the active interface will vary. The values shown are the maximum lengths of the pier riser to shore building cable run for each configuration.

a. Pier configuration 1. Refer to the Pier configuration 1 table, table 7-XXXIII, for the maximum length of the cable run from the pier riser to the shore building with the active interface. This configuration pertains to shipboard installations A thru G (see 5.4.2 and 5.4.5).

b. Pier configuration 2. Refer to the Pier configuration 2 table, table 7-XXXV, for the maximum length of the cable run from the pier riser to the shore building with the active interface. This configuration pertains to shipboard installations A thru G (see 5.4.2 and 5.4.5).

c. Pier configuration for the middle pier at Earle. Refer to the Pier configuration 1 table, table 7-XXXIII, for the maximum length of the cable run from the pier riser to the shore building with the active interface. This configuration pertains to shipboard installations A thru G (see 5.4.2 and 5.4.5).

d. Pier configuration for the non ADNS ship. Refer to the Pier configuration 2 table, table 7-XXXV, for the maximum length of the cable run from the pier riser to the shore building with the active interface.

e. Submarine configuration for Installation H. Refer to the installation H configuration table, table 7-XXXVII for the maximum length of the cable run from the pier riser to the shore building with the active interface.

NOTE: This submarine cable topology configuration has additional connections that must be included in the loss budget. The shore based layout is assumed to be that of pier configuration 1.

TABLE 7-XXXIII. Maximum shore cable lengths for pier configuration 1.

Interface type	Maximum Length of cable run from the pier riser to the shore building with the active interface (km)				
	1 Ship	2 Nested Ships	2 Nested Ships W/ X-connect	3 Nested Ships	3 Nested Ships W/ X-connect
T1 w/ FOM 1/ (multimode fiber)	1.7	1.2	1.0	0.6	0.5
ATM OC-3 2/ (multimode fiber)	0.5	3/	3/	3/	3/
ATM OC-12 (single mode fiber)	4.3	3.2	2.7	2.1	1.6

1/ Optical power budget of the Canoga Perkins Corporation, Fiber Optic Modem (FOM) is 15 dB.
2/ OC-3 maximum length values were determined with minimal design margin.
3/ This configuration is not allowed unless repeaters are added to the configuration or other appropriate measures taken.

Source: https://assist.dla.mil -- Downloaded: 2016-12-10T08:13Z
Check the source to verify that this is the current version before use.

NOTE: Nested ships refers to through-the-ship configurations. X-connect refers to the cross converter assembly when the ships are berthed in opposite directions.

TABLE 7-XXXIV. Component assumptions in pier configuration 1.

Component	Number/quantity of components				
	1 Ship	2 Nested Ships	2 Nested Ships W/ X-connect	3 Nested Ships	3 Nested Ships W/ X-connect
Hermaphroditic connectors 1/, 2/	2	4	5	6	7
ST connectors 2/	5	5	5	5	5
Ship-to-pier cable (km) 3/	0.3	0.5	0.5	0.7	0.7

1/ Hermaphroditic connector is at the umbilical assembly and pier/ship connections which interface with the umbilical assembly.
2/ Number stated is the number of mated pair
3/ Cable length from ship radio room interconnection box to the interconnection box on the pier (pier riser. The following lengths were used to determine the ship-to-pier cable length:

a. Port/starboard interconnection box to radio room interconnection box: 152 m.
b. Port interconnection box to starboard interconnection box: 200 ft.
c. Umbilical assembly: 152 m.

NOTE: Nested ships refers to through-the-ship configurations. X-connect refers to the cross converter assembly when the ships are berthed in opposite directions.

TABLE 7-XXXV. Maximum shore cable lengths for pier configuration 2.

Interface type	Maximum Length of cable run from the pier riser to the shore building with the active interface (km)				
	1 Ship	2 Nested Ships	2 Nested Ships W/ X-connect	3 Nested Ships	3 Nested Ships W/ X-connect
T1 w/FOM 1/ (multimode fiber)	2.1	1.3	1.1	0.8	0.6
ATM OC-3 2/ (multimode fiber)	0.7	0.2	3/	3/	3/
ATM OC-12 (single mode fiber)	4.6	3.5	3.1	2.5	2.1

1/ Optical power budget of the Canoga Perkins Corporation, Fiber Optic Modem (FOM) is 15 dB.
2/ OC-3 maximum length values were determined with minimal design margin.
3/ This configuration is not allowed unless repeaters are added to the configuration or other appropriate measures taken.

NOTE: Nested ships refers to through-the-ship configurations. X-connect refers to the cross converter assembly when the ships are berthed in opposite directions.

Source: https://assist.dla.mil -- Downloaded: 2016-12-10T08:13Z
Check the source to verify that this is the current version before use.

TABLE 7-XXXVI. Component assumptions in pier configuration 2.

Component	1 Ship	2 Nested Ships	2 Nested Ships W/ X-connect	3 Nested Ships	3 Nested Ships W/ X-connect
Hermaphroditic connectors 1/, 2/	2	4	5	6	7
ST connectors 2/	4	4	4	4	4
Ship-to-pier cable (km) 3/	0.3	0.5	0.5	0.7	0.7

1/ Hermaphroditic connector is at the umbilical assembly and pier/ship connections which interface with the umbilical assembly.
2/ Number stated is the number of mated pair
3/ Cable length from ship radio room interconnection box to the interconnection box on the pier (pier riser). The following lengths were used to determine the ship-to-pier cable length:

a. Port/starboard interconnection box to radio room interconnection box: 152 m.
b. Port interconnection box to starboard interconnection box: 200 ft.
c. Umbilical assembly: 152 m.

NOTE: Nested ships refers to through-the-ship configurations. X-connect refers to the cross converter assembly when the ships are berthed in opposite directions. When over-the-deck nesting is required, the quantities shown for ship 1 should be used for ships 2 and 3.

TABLE 7-XXXVII. Maximum shore cable lengths for the Installation H configuration(with a hull pressure penetration and pier configuration 1).

Interface type	Maximum Length of cable run from the pier riser to the shore building with the active interface (km)				
	1 Ship	2 Nested Ships	2 Nested Ships W/ X-connect	3 Nested Ships	3 Nested Ships W/ X-connect
T1 w/FOM 1/ (multimode fiber)	1.4	N/A	N/A	N/A	N/A
ATM OC-3 2/ (multimode fiber)	0.3	N/A	N/A	N/A	N/A
ATM OC-12 (single mode fiber)	3.6	N/A	N/A	N/A	N/A

1/ Optical power budget of the Canoga Perkins Corporation, Fiber Optic Modem (FOM) is 15 dB.
2/ OC-3 maximum length values were determined with minimal design margin.
3/ N/A = Not Applicable. Submarines in a nested configuration use the over-the-deck umbilical assembly routing scheme. This configuration is for nested ship classes that use the through-the-ship umbilical assembly routing scheme.

Source: https://assist.dla.mil -- Downloaded: 2016-12-10T08:13Z
Check the source to verify that this is the current version before use.

TABLE 7-XXXVIII. Component assumptions in Installation H configuration.

Component	1 Ship	2 Nested Ships	2 Nested Ships W/ X-connect	3 Nested Ships	3 Nested Ships W/ X-connect
Hermaphroditic connectors 1/, 2/	2	N/A	N/A	N/A	N/A
ST connectors 2/	6	N/A	N/A	N/A	N/A
Hull penetrators 3/	1	N/A	N/A	N/A	N/A
Ship-to-pier cable (km)4/	0.2	N/A	N/A	N/A	N/A

1/ Hermaphroditic connector is at the umbilical assembly and pier/ship connections which interface with the umbilical assembly.
2/ Number stated is the number of mated pair.
3/ Number stated is the number of mated penetrator connections.
4/ Cable length from submarine radio room interconnection box to the interconnection box on the pier (pier riser). The following lengths were used to determine the sub-to-pier cable length:

a. Hull penetrator connector to radio room interconnection box: 61 m.
b. Umbilical assembly: 152 m.

5.10.3 Guidelines when high optical loss is encountered. Corrective measures shall be instituted for pierside connections that show unacceptable performance (such as severely reduced network throughput). Perform one of the following corrective measures:

a. Identify and replace the primary cause of the high optical loss.

b. Check the following components and replace if found outside of specification.

(1) active fiber optic interfaces.
(2) umbilical assemblies.

NOTE: The two components most susceptible to aging, wear or damage are the active components (fiber optic interfaces) and umbilical assemblies. The umbilical assembly is a low reliability portion of the cable plant. It may be appropriate to perform an optical link loss test periodically to assess degradation.

c. Upgrade the system architecture to provide for signal regeneration.

d. Change the umbilical assembly routing scheme from through-the-ship to over-the-deck. NOTE: This would require 3 pigtail assemblies at the shore interconnection box.

Source: https://assist.dla.mil -- Downloaded: 2016-12-10T08:13Z
Check the source to verify that this is the current version before use.

Pierside Connectivity Fiber Optic Topology
From Ship-to-Shore Active Devices
Number of Connections

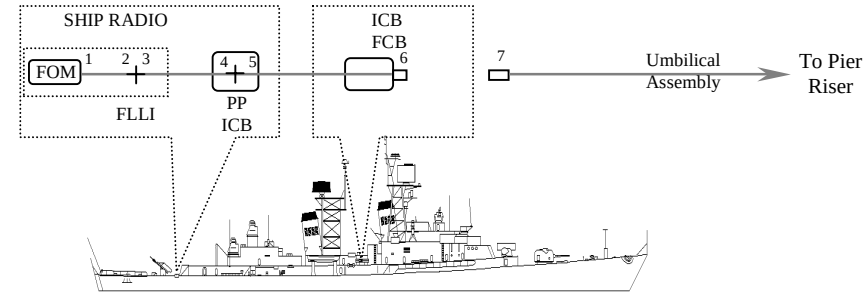

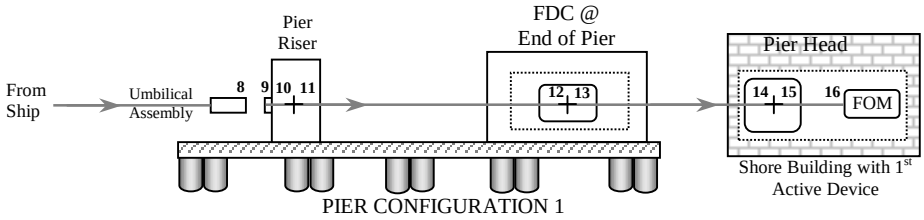

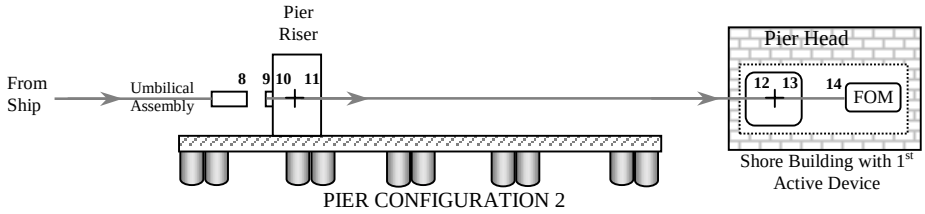

SW = Switch
FLLI = Fiber Land Line Interface
FDC = Fiber Distribution Center
ICB = Interconnection Box
PP = Patch Panel
ITN = Information Transfer Node
FOM = Fiber Optic Modem
2┼3 = Connector Mated Pair

Where: | = PP
2,3 = connector
- = cable to connector

PP includes ST-to-ST adapter (feed through)

FIGURE 7-25. Pier configurations.

Source: https://assist.dla.mil -- Downloaded: 2016-12-10T08:13Z
Check the source to verify that this is the current version before use.

Pierside Connectivity Fiber Optic Topology
From Ship-to-Shore Active Devices
Number of Connections

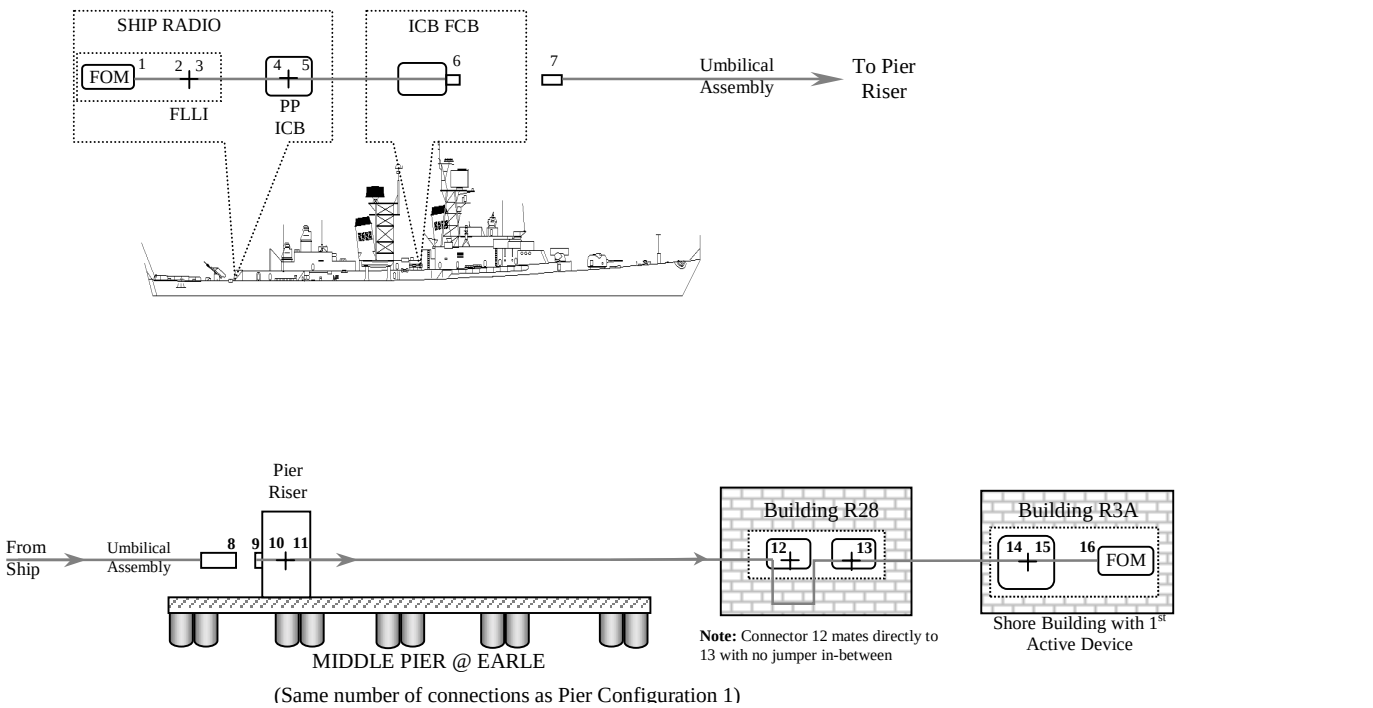

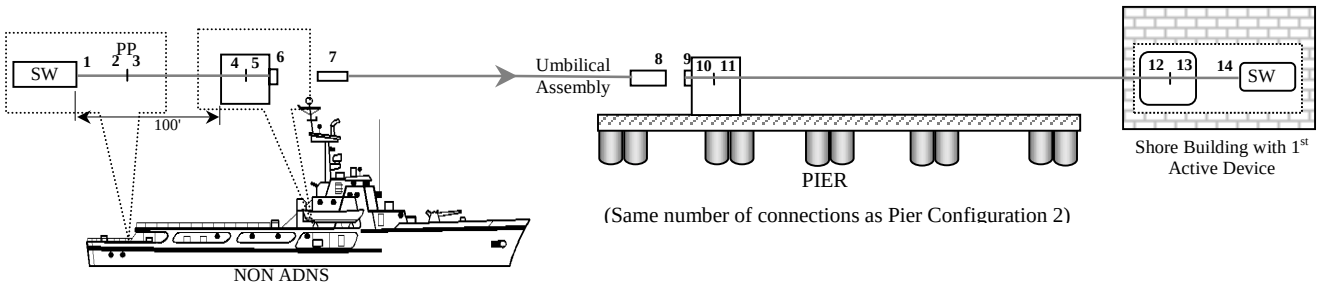

FIGURE 7-25. Pier configurations - continued.

Source: https://assist.dla.mil -- Downloaded: 2016-12-10T08:13Z
Check the source to verify that this is the current version before use.

Pierside Connectivity Fiber Optic Topology
Nested Ship Configuration Using
"Through-the-Ship" Cable Routing

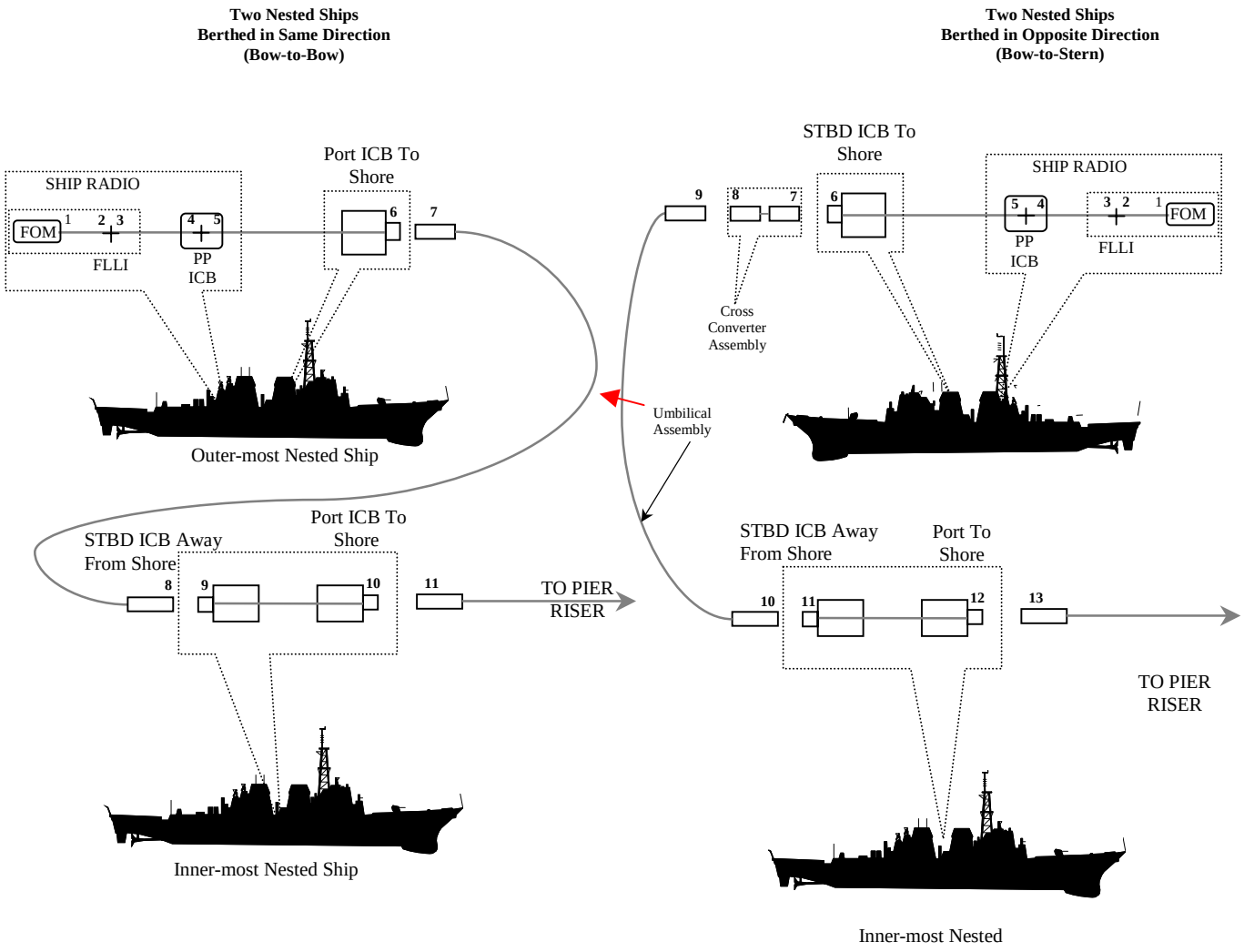

FIGURE 7-26. Nested ship configurations with number of connections.

Source: https://assist.dla.mil -- Downloaded: 2016-12-10T08:13Z
Check the source to verify that this is the current version before use.

Pierside Connectivity Fiber Optic Topology
Nested Ship Configuration Using
"Through-the-Ship" Cable Routing

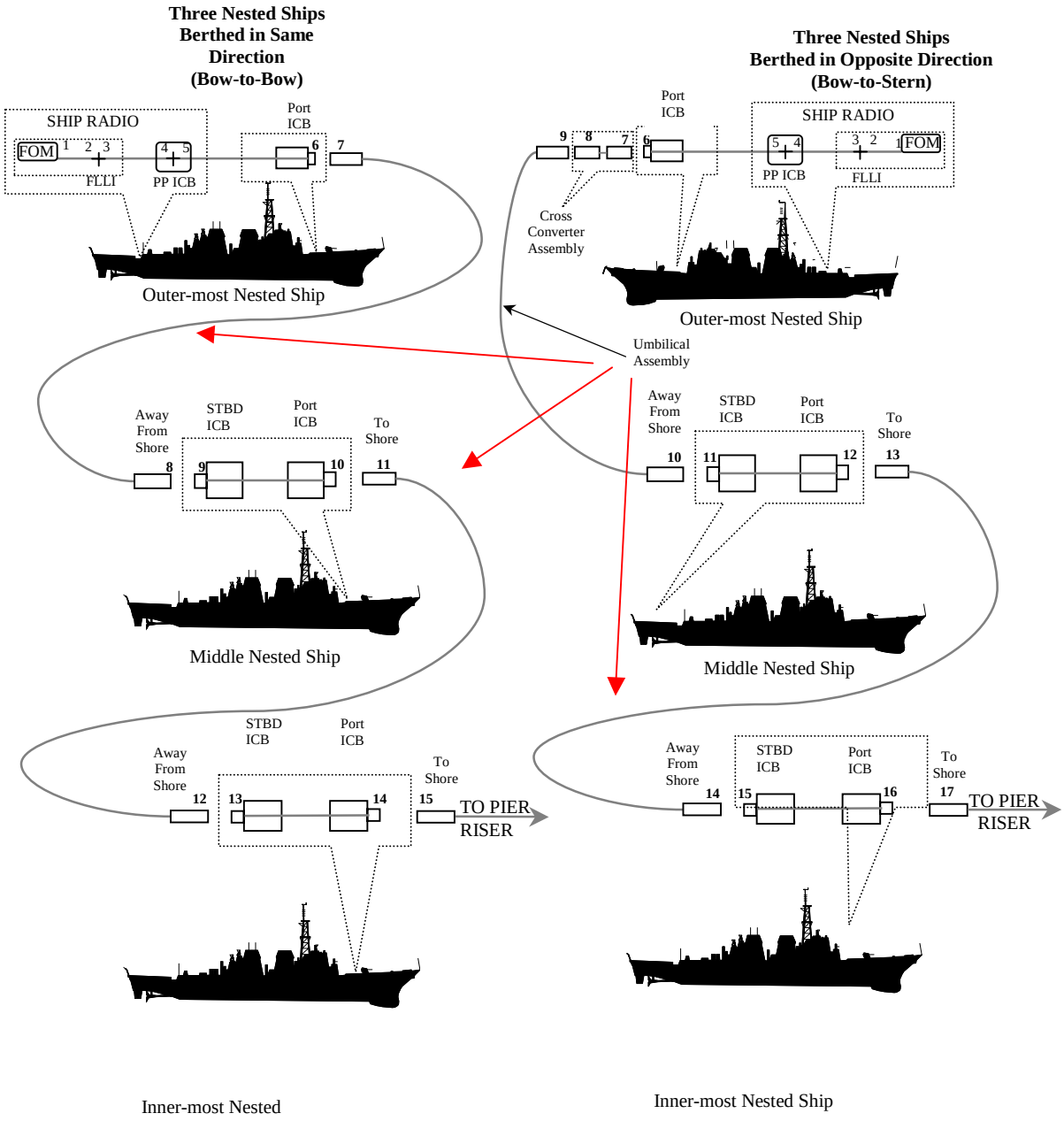

FIGURE 7-26. Nested ship configurations with number of connections - continued.

Source: https://assist.dla.mil -- Downloaded: 2016-12-10T08:13Z
Check the source to verify that this is the current version before use.

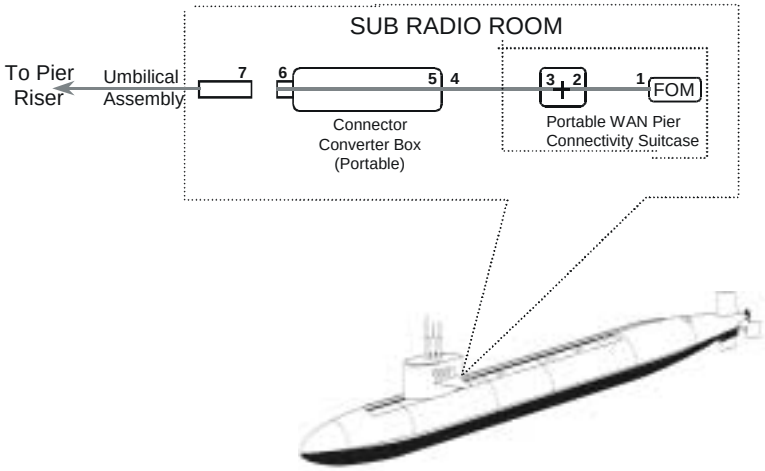

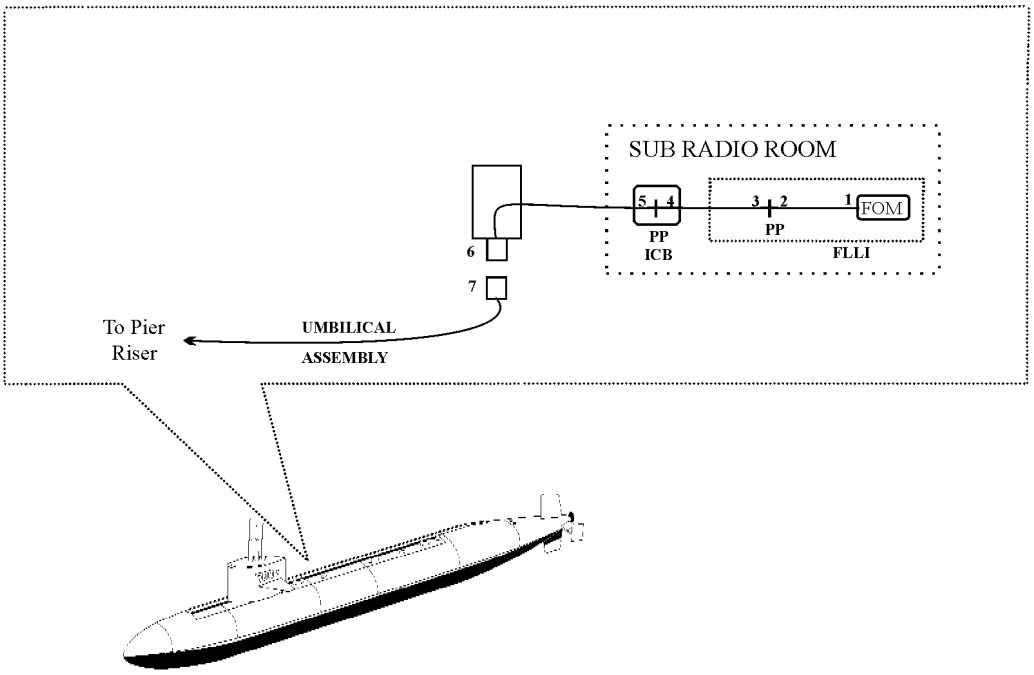

FIGURE 7-27. Submarine configurations with number of connections.

Source: https://assist.dla.mil -- Downloaded: 2016-12-10T08:13Z
Check the source to verify that this is the current version before use.

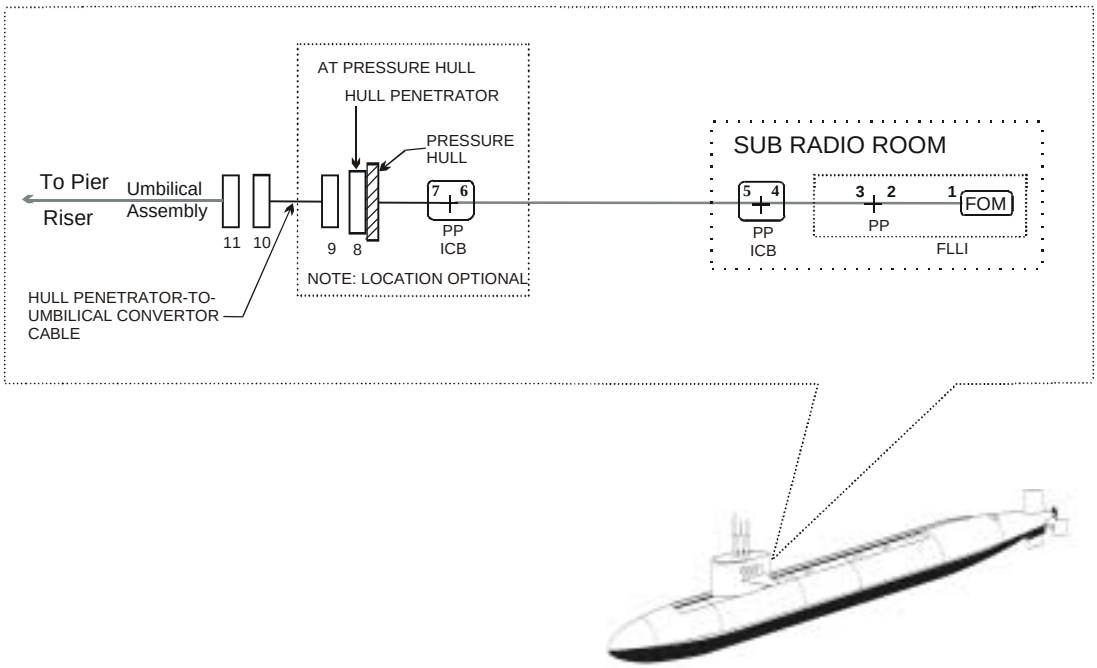

FLLI = Fiber Land Line Interface
ICB = Interconnection Box
PP = Patch Panel
FOM = Fiber Optic Modem
2 3 = Connector Mated Pair

Where: | = PP
2,3 = connector
— = cable to connector

PP includes ST-to-ST adapter (feed through)

FIGURE 7-27. Submarine configurations with number of connections -(continued).

Source: https://assist.dla.mil -- Downloaded: 2016-12-10T08:13Z
Check the source to verify that this is the current version before use.

6. NOTES

(This section contains information of a general or explanatory nature that may be helpful, but is not mandatory.)

6.1 Intended use. The methods for installation of connectors and interconnections depicted in this standard practice are intended primarily for new construction; however, they are applicable for conversion or alteration of existing ships.

6.2 Issue of DODISS. When this standard practice is used in acquisition, the applicable issue of DODISS must be cited in the solicitation (see 2.2.1).

6.3 Standard method designation. To simplify the usage of this standard practice, an alpha-numeric designation system was developed to identify and locate a given method. The methods were grouped together by function as follows:

Group	A:	Hermaphroditic connector termination
	B:	Shipboard interconnection box placement and interior cable routing
	C:	Umbilical assembly cable tie down guidelines and practices
	D:	Umbilical assembly cable spooling operations
	E:	Cleaning and mating the hermaphroditic connector
	F:	Optical loss testing of pierside connectivity cable components
	G:	Pier interconnection box installation.
	H:	Hermaphroditic connector positions, mating and concatenation.
	I:	Optical return loss testing of pierside connectivity cable assemblies.
	J:	Optical acceptance testing of pierside connectivity measurement quality jumpers.

Then the designation system was completed as follows:

```
7    A   1  - 2

•    •   •    •
•    •   •    •
•    •   •    •
•    •   •    •••••••••••••    Alternate procedures within method
•    •   •••••••••••••••••••   Method number within group
•    •••••••••••••••••••••••   Functional group
••••••••••••••••••••••••••••••• MIL-STD-2042 Part number
```

Thus, method 7A1-2 identifies the second alternate procedure within method 1 of group A in Part 7 (MIL-STD-2042-7) of MIL-STD-2042.

6.4 Subject term (key word) listing.

Fiber optic cable assembly
Fiber optic interconnection hardware
Hermaphroditic connector
Safety

Preparing activity:
NAVY – SH

(Project SESS-0034)

Source: https://assist.dla.mil -- Downloaded: 2016-12-10T08:13Z
Check the source to verify that this is the current version before use.

METHOD 7A1

HERMAPHRODITIC CONNECTOR TERMINATION

1. SCOPE.

1.1 Scope. This method describes procedures for installing NAVSEA DWG 7379172 pin and socket termini onto pierside or shipboard cable and for assembling NAVSEA DWG 7379171 hermaphroditic cable plugs and hermaphroditic receptacles. Method 7A1-1 covers installation of termini onto shipboard cable and method 7A1-2 covers installation of the hermaphroditic cable plug onto each end of an umbilical assembly.

2. REQUIRED EQUIPMENT AND MATERIALS.

2.1 The equipment and materials in the tables located in the applicable sections of this method shall be used to perform these procedures.

3. PROCEDURES.

3.1 Safety summary. The following safety precautions shall be observed:

a. Safety glasses shall be worn at all times when handling bare fibers or dispensing epoxy.

b. Do not touch the ends of the fiber as they may be razor sharp. Wash your hands after handling bare fiber.

c. Avoid skin contact with epoxies.

d. Do not stare into the end of a fiber until verifying that the fiber is not connected to a laser light source or LED.

3.2 Procedure I. Method 7A1-1 Installation of termini onto shipboard cable. Method 7A1-1 describes procedures for the installation of termini onto the end of shipboard cable, and termini insertion into the jam nut mounted receptacle.

3.2.1 Equipment and materials. The equipment and materials in table 7A1-I shall be used to perform this procedure:

TABLE 7A1-I. Equipment and materials.

Description	Quantity
Wipes (NAVSEA DWG 6872813-22 or equal)	As required
Ruler	1
Alcohol bottle with alcohol/2-propanol or equal (sealable type)	1
Canned air or compressed air	As required
Cable jacket stripping tool (NAVSEA DWG 6872813-8 or equal)	1
Masking tape	As required
Kevlar shears (NAVSEA DWG 6872813-16 or equal)	1
OFCC strip tool (NAVSEA DWG 6872813-10 or equal)	1
Safety glasses	1

Source: https://assist.dla.mil -- Downloaded: 2016-12-10T08:13Z
Check the source to verify that this is the current version before use.

TABLE 7A1-I. Equipment and materials - continued.

Description	Quantity
Buffer strip tool (NAVSEA DWG 6872813-9 or equal)	1
Cleaning wire (NAVSEA DWG 6872813-32 or equal)	As required
Epoxy (MIL-PRF-24792)	As required
Syringe with dispensing needles (NAVSEA DWG 6872813-27 or equal)	As required
Crimp tool (NAVSEA DWG 6872813-17 or equal)	1
Razor blade	1
Cure adapters (NAVSEA DWG 6872813-19 or equal)	As required
Curing oven (NAVSEA DWG 6872813-19 or equal)	1
Cable stand (NAVSEA DWG 6872813-19 or equal)	1
Cable stand ring (NAVSEA DWG 6872813-19 or equal)	1
Cable clip (NAVSEA DWG 6872813-19 or equal)	1
Cleaver (NAVSEA DWG 6872813-7 or equal)	1
Polishing paper (5 µm aluminum oxide, foam backed) (NAVSEA DWG 6872813-24 or equal)	As required
Polishing tool ceramic termini (NAVSEA DWG 6872813-18 or equal)	1
Terminus insertion tool (NAVSEA DWG 6872813-2 or equal)	1
Terminus insertion tool 90° (NAVSEA DWG 6872813-15 or equal)	1
Polishing paper (0.1 µm diamond, mylar backed) (NAVSEA DWG 6872813-41 or equal)	As required
Resilient pad (70 to 90 durometer)(NAVSEA DWG 6872813-42 or equal)	1
Glass polishing plate (NAVSEA DWG 6872813-3 or equal)	1
7X eye loupe	1
Polishing paper (1 µm aluminum oxide, mylar backed) (NAVSEA DWG 6872813-23 or equal)	As required
Water bottle (sealable type)	1
Terminus removal tool (NAVSEA DWG 6872813-6 or equal)	1
Optical microscope 400X (NAVSEA DWG 6872813-28 or equal)	1

Source: https://assist.dla.mil -- Downloaded: 2016-12-10T08:13Z
Check the source to verify that this is the current version before use.

TABLE 7A1-I. Equipment and materials - continued.

Description	Quantity
Alignment sleeve insertion and removal tool (ceramic termini)(NAVSEA DWG 6872813-4 or equal)	1
Loctite or equal	As required
"O"-ring lubricant (Bray Cote 609 or equal)	As required
Adjustable wrench	1
Protective caps (plastic)	As required

CAUTION: Throughout the termination process, cleanliness is critical to obtaining a high optical quality connector. Make sure that your hands and the work area are as clean as possible to minimize the ingress of dirt into the connector parts.

NOTE: Verify that the epoxy shelf life has not expired. Do not use epoxy with an expiration date that has passed. Epoxy shelf life can be extended if the epoxy is refrigerated. Contact the epoxy vendor or the Naval Surface Warfare Center (see 1.1.1) for additional information.

3.2.2 Cable preparation.

Step 1 - Ensure that the proper cable is used. The 8 fiber, multimode cable is M85045/17-01P. The 8 fiber, single mode cable is marked M85045/17-02P.

Step 2 - Measure the cable to the required length.

NOTE: Make sure to include the 6 ft inside the box strip back length at each end of the cable.

Step 3 - Clean at least 1.8 m (6 ft) of the outer cable jacket that will be removed using a wipe dampened with alcohol and blow it dry with air.

NOTE: Keep the cable, connector parts and termini free from oil, dirt and grease throughout the installation procedure. If cleaning is necessary, use a wipe dampened with alcohol and blow the part dry with air.

Step 4 - CAUTION: Do not cut or nick the OFCC jackets.

Mark the cable jacket approximately 1.8 m (6 ft) from the end and strip back the outer cable jacket to the mark using the cable stripper. Fold back the Kevlar strength members and temporarily tape them to the cable outer jacket.

Step 5 - Cut off the exposed central strength member and any fillers using the Kevlar shears.

Step 6 - Remove any water blocking material, clean the OFCCs using a wipe dampened with alcohol and blow them dry with air.

Step 7 - Trim Kevlar strength members, using Kevlar shears, to be flush with the cable’s outer jacket.

Source: https://assist.dla.mil -- Downloaded: 2016-12-10T08:13Z
Check the source to verify that this is the current version before use.

3.2.3 Fiber preparation.

Step 1 - Feed each OFCC into a crimp sleeve and slide the sleeve back from the end of the OFCC.

NOTE: The “breakout” cables within the outer cable jackets of MIL-PRF-85045 shipboard cable are referred to as OFCC’s (Optical Fiber Cable Component’s) in this procedure.

NOTE: Only use crimp sleeves intended for termini. Do not use crimp sleeves intended for other types of connectors. The standard crimp sleeve for the terminus may be oriented in either direction.

Step 2 - Trim the OFCCs to dimension A in table 7A1-II using the Kevlar shears (see figure 7A1-1).

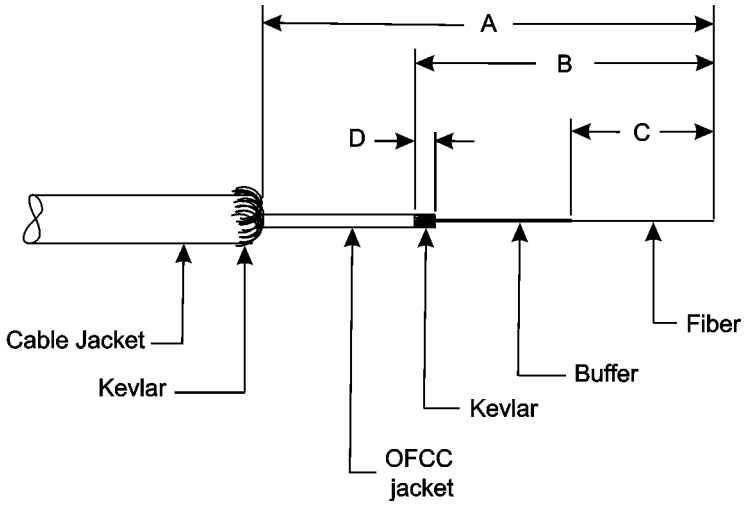

FIGURE 7A1-1. Cable stripping dimensions.

Step 3 - Remove the OFCC jackets back to dimension B in table 7A1-II using the OFCC stripper.

NOTE: The optimum way to remove the OFCC jackets is to ring cut the jacket with the OFCC stripper and pull the jacket off by hand. Pushing off the OFCC jacket with a tightly held OFCC stripper can lead to fiber breakage.

Step 4 - Trim the Kevlar on the OFCC so that approximately 3 mm (0.12 in) extends past the OFCC jacket.

TABLE 7A1-II. Cable stripping dimensions.

Port/Starboard/Midships Interconnection Box Location	Dimensions			
	A m (ft)	B mm (in)	C mm (in)	D mm (in)
Pin and Socket Termini	1.8 (6)	32 (1.3)	22 (0.87)	3 (0.12)

Source: https://assist.dla.mil -- Downloaded: 2016-12-10T08:13Z
Check the source to verify that this is the current version before use.

Step 5 - WARNING: Wear safety glasses when removing the fiber buffer and coating to avoid possible eye injury.

Remove the fiber buffers and coatings back to dimension C in table 7A1-II using the buffer stripper. Remove the buffer and coating in small sections (approximately 6 mm (0.25 in) at a time.)

NOTE: Normally, the buffer and coating are tightly adhered to one another and come off of the fiber at the same time.

Step 6 - CAUTION: The uncoated fiber is in its most vulnerable state. Take extreme care not to damage the fiber.

Remove any residual coating material from the bare fibers with a wipe dampened with alcohol. Wipe only once from the end of the buffer towards the end of the fiber. (NOTE: Do not repeatedly wipe the bare fiber as this will weaken the fiber.)

3.2.4 Installation of the termini onto the fibers.

NOTE: This procedure describes the process for installing ceramic termini onto either multimode or single-mode fibers. The termini use epoxy to secure the fiber.

Step 1 - Turn on the curing oven so that it attains the proper temperature before the termini are placed within it (approximately 20 minutes).

Step 2 - Inspect the terminus and verify that the ferrule hole is free and clean of dirt. This can be accomplished by holding the front of the terminus up to a light and verifying that the light is visible from the rear of the terminus. If light cannot be seen through the terminus, push music wire through the terminus hole to clear it. Then blow dry air through the hole to remove any debris.

Step 3 - CAUTION: Do not introduce large air bubbles into the epoxy during the mixing process. Large air bubbles in the epoxy can lead to connector failure during temperature extremes.

Remove the divider from a 2-part epoxy package and mix the two parts together until the epoxy is a smooth uniform color (see figure 7A1-2). The epoxy can be mixed by either repeatedly rolling the divider or gently sliding the divider over the package.

NOTE: Alternatively, the epoxy may be mixed by massaging the epoxy package by hand.

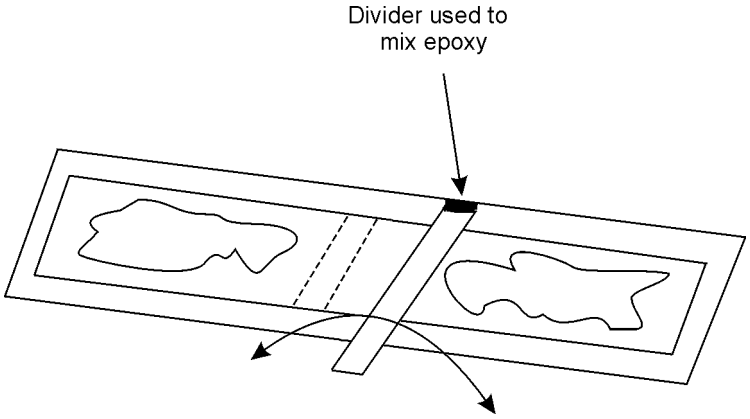

FIGURE 7A1-2. Mixing the epoxy.

Source: https://assist.dla.mil -- Downloaded: 2016-12-10T08:13Z
Check the source to verify that this is the current version before use.

Step 4 - Install the syringe tip on the syringe, remove the plunger, and squeeze the epoxy into the syringe. Replace the plunger.

Step 5 - WARNING: Wear safety glasses while dispensing the epoxy to avoid possible eye injury.

Remove air pockets in the syringe by holding the tip of the syringe upward and dispensing epoxy onto a wipe until it runs free and clear.

Step 6 - Slide the terminus, rear first, onto the syringe tip (see figure 7A1-3). Keeping the syringe vertical, depress the plunger and slowly inject epoxy into the terminus until it escapes out of the ferrule, forming a very small bead. (NOTE: Do not overfill. Be extremely careful not to get epoxy on the pin spring or other terminus moving parts.)

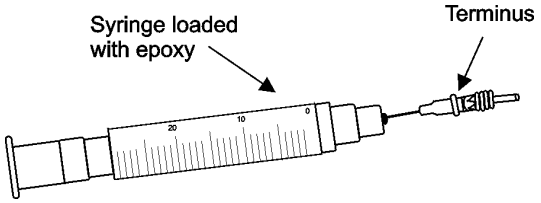

FIGURE 7A1-3. Injecting epoxy into the terminus.

Step 7 - Withdraw the syringe from the terminus. Maintain some pressure on the plunger as the syringe is withdrawn so that the terminus is completely filled with epoxy. Using a wipe dampened with alcohol, wipe away any epoxy on the outer diameter of ferrule without disturbing the epoxy bead.

NOTE: Alternatively, the terminus may be completely filled by maintaining a light pressure on the syringe plunger and allowing the epoxy to push the terminus off of the syringe tip.

NOTE: At this point, the terminus may be inserted into the cure adapter. Refer to Step 13 for insertion of the terminus into the cure adapter.

Step 8 - Insert the fiber into the rear of the terminus (see figure 7A1-4). Gently work the fiber through the terminus until the buffer seats against the rear of the ferrule. The buffered fiber should come up to the rear of the terminus and the Kevlar should surround the rear of the terminus. Do not allow the Kevlar to enter the rear of the terminus. Once inserted, do not allow the fiber to slip back.

NOTE: Rotate the fiber as it moves through the connector ferrule. This evenly distributes epoxy around the fiber in the terminus hole.

Source: https://assist.dla.mil -- Downloaded: 2016-12-10T08:13Z
Check the source to verify that this is the current version before use.

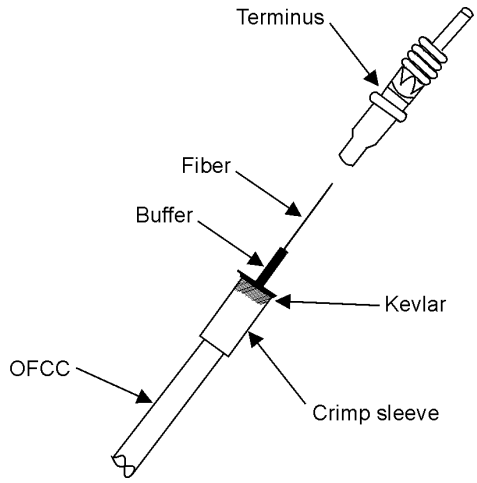

FIGURE 7A1-4. Inserting the fiber into the terminus.

Step 9 - Slide the crimp sleeve over the Kevlar and crimp it to the rear of the terminus using the crimp tool. (NOTE: A small amount of epoxy may be added on the Kevlar near the rear of the terminus before the crimp sleeve is installed. However, no epoxy should be visible once the crimp sleeve is installed.)

Step 10 -Verify that the Kevlar does not protrude excessively from under the crimp sleeve. Excessive Kevlar protrusion will cause the terminus to not seat properly in the finished connector. If excessive Kevlar protrudes from under the crimp sleeve, trim it back using a razor blade.

Step 11 -Verify that there is a small amount of epoxy around the fiber where it protrudes from the ferrule. If it is found that there is no small bead of epoxy on the terminus tip, carefully add a small amount of epoxy around the fiber. (NOTE: There should only be a small amount of epoxy around the fiber to support it later during the polishing process. If too much epoxy is around the fiber during the curing process it may cause the fiber to crack.)

NOTE: If the terminus was inserted into the cure adapter in step 7, then omit steps 12 and 13.

Step 12 -Using a wipe dampened with alcohol, carefully wipe away any excess epoxy on the fiber that is more than 2mm (0.08 in) from the ferrule tip surface.

Step 13 -Insert the terminus into the cure adapter until it snaps into place (see figure 7A1-5).

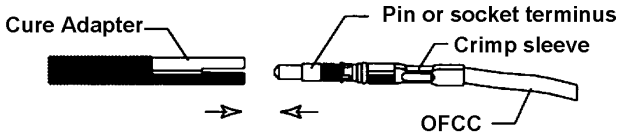

FIGURE 7A1-5. Inserting a terminus in a cure adapter.

Source: https://assist.dla.mil -- Downloaded: 2016-12-10T08:13Z
Check the source to verify that this is the current version before use.

Step 14 -Repeat steps 2 through 13 for each fiber to be terminated.

Step 15 -Place the cure adapters in the curing oven, and position the cable vertically over the oven using the cable stand, cable stand ring and cable clip (see figure 7A1-6). Cure the epoxy for a minimum of 10 minutes (maximum of 20 minutes) at 120°C (248°F). (NOTE: When the cable is positioned above the terminus, make sure that no bends are placed in the buffered fibers. Each buffered fiber should enter the terminus parallel to the terminus.)

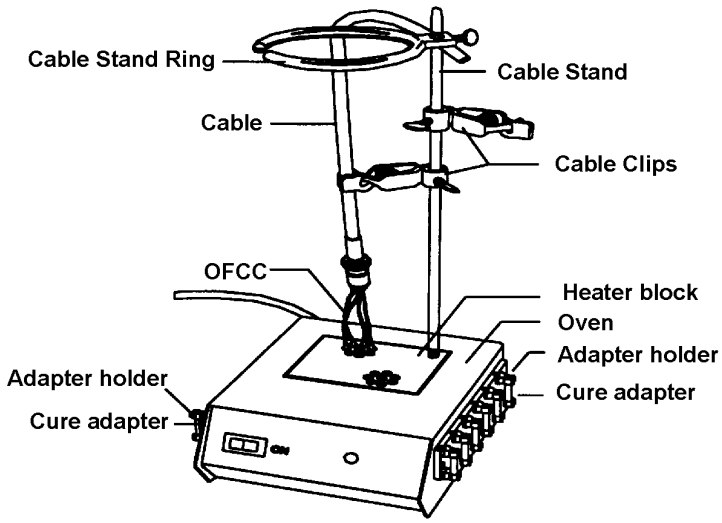

FIGURE 7A1-6. Termini in the curing oven.

Step 16 -Turn the curing oven off and remove the cure adapters and termini from the curing oven. Allow the cure adapters and termini to cool for approximately 4 minutes.

3.2.5 Polishing the fiber ends.

NOTE: Use either the flat or domed end polish for termini on multimode fiber and a domed end polish for termini on single mode fiber.

3.2.5.1 Flat end polish. This procedure will produce a terminus with a flat end polish. This procedure is typically used for multimode applications. Procedures for hand polishing are contained herein. Machine polishing may be used as an alternate method, provided the following requirements are satisfied:

a. The manufacturer's instructions will be rigidly adhered to, except that the polishing papers or disks shall be 5 µm aluminum oxide foam backed, 1 µm aluminum oxide mylar backed, and 0.1 µm diamond mylar backed as used in hand polishing. (NOTE: Alternate polishing materials may be used if authorized approval is obtained and the polishing machine includes the appropriate stops to prevent changes to the ferrule length.)

b. The machine polished terminus shall undergo the same quality check used for the manually polished terminus as described herein.

NOTE: The procedures contained herein should produce an optical terminus with a physical contact (PC) polish.

Source: https://assist.dla.mil -- Downloaded: 2016-12-10T08:13Z
Check the source to verify that this is the current version before use.

Step 1 - WARNING: Wear safety glasses when scoring the fiber to avoid possible eye injury.

Remove the terminus from the cure adapter and score the fiber close to the terminus tip at the epoxy interface using one short light stroke with cleaving tool (see figure 7A1-7). (NOTE: Do not break the fibers with the cleaving tool.) Pull off each fiber with a gentle, straight pull. Deposit the waste fiber in a container.

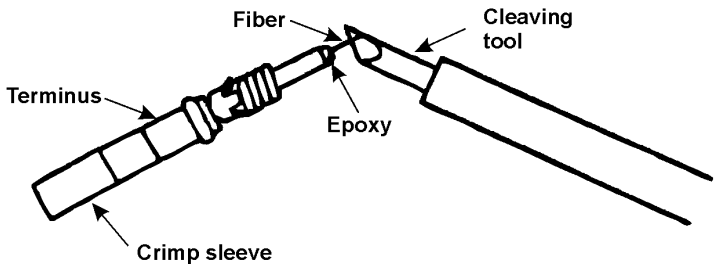

FIGURE 7A1-7. Scoring the fiber.

NOTE: The termini not being polished should be left in the cure adapters during the polishing process to protect the fibers from breakage.

NOTE: Before inserting the terminus into the polishing tool, the terminus may be held vertically and the end of the fiber polished off by lightly running the 5 µm polishing paper over the top of the terminus tip. (This is referred to as air polishing the terminus.)

Step 2 - Rotate the top half of the polishing tool 90 degrees counterclockwise and separate the top from the base.

Step 3 - Place the end of the terminus insertion tool at the rear of the crimp sleeve with the OFCC laid in the tool channel (see figure 7A1-8).

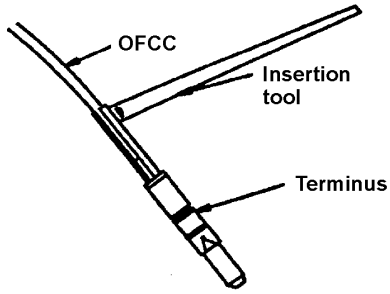

FIGURE 7A1-8. Placing the terminus in the insertion tool.

Step 4 - Insert the terminus into the center of the polishing tool top. Apply pressure with the insertion tool until the terminus snaps into place. Remove the tool by pulling straight back (see figure 7A1-9). (NOTE: Difficulty in inserting the terminus into the polishing tool may indicate epoxy on outside of the terminus which must be removed before proceeding.)

Source: https://assist.dla.mil -- Downloaded: 2016-12-10T08:13Z
Check the source to verify that this is the current version before use.

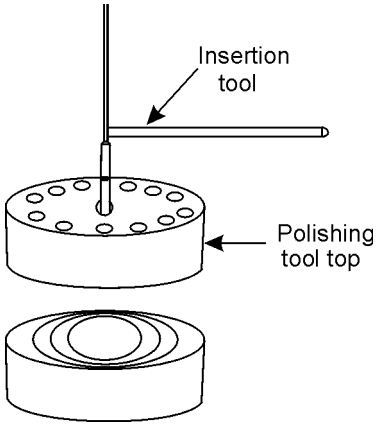

FIGURE 7A1-9. Inserting the terminus in the polishing tool.

Step 5 - Install the top half of the polishing tool on the bottom half and rotate it clockwise (90 degrees) until it locks in place.

Step 6 - Clean the glass polishing plate, the backs of the polishing papers, and the surface of the polishing tool using a wipe dampened with alcohol. Blow all of the surfaces dry with air.

Step 7 - Place the 5 µm polishing paper on the glass plate and start polishing the terminus with very light pressure (the weight of the tool) using a figure-8 motion. Do not over polish the terminus. (NOTE: The first polish is complete when almost all of the epoxy is gone from the tip of the terminus.) Since the polishing time varies with the amount of epoxy present on the tip of the terminus, inspect the terminus tip frequently. Whenever the polishing tool is lifted, remove the grit from the tool and the terminus with air. When polishing is complete, clean the terminus and the polishing tool using a wipe dampened with alcohol and blow them dry with air. Perform a rough inspection of the ferrule end using the eye loop.

Step 8 - Replace the 5 µm paper with the 1 µm paper. Polish the terminus with very light pressure using a figure-8 motion for approximately 10 to 20 complete motions.

NOTE: The 1 µm polish is complete when all of the epoxy is gone from the tip of the terminus.

Step 9 - Replace the 1 µm paper with the 0.1 µm paper. Wet the paper and polish the terminus with very light pressure using a figure 8 motion for approximately 10 to 20 complete motions.

NOTE: The final polish may also be performed using dry paper.

Step 10 - Rotate the top of the polishing tool counterclockwise (90 degrees) and separate the top from the base. Insert the terminus removal tool into the bottom of the terminus cavity of the polishing tool top and press on the hilt of the removal tool until the tool clicks into place (see figure 7A1-10). Depress the plunger and slide the terminus out of the polishing tool. Clean the terminus and the polishing tool with a wipe dampened with alcohol and blow them dry with air.

Source: https://assist.dla.mil -- Downloaded: 2016-12-10T08:13Z
Check the source to verify that this is the current version before use.

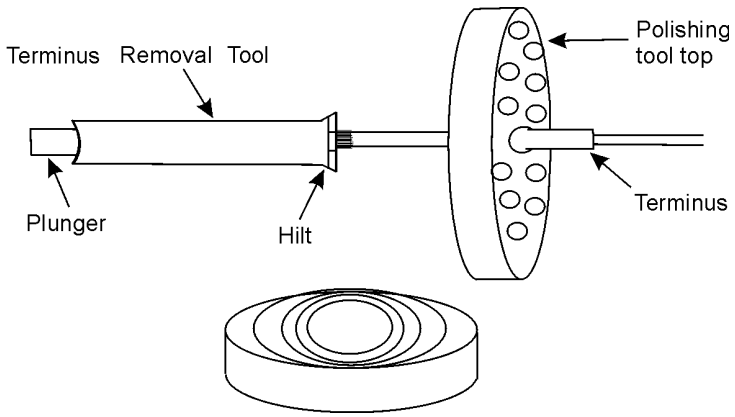

FIGURE 7A1-10. Removing the terminus from the polishing tool.

Step 11 -Repeat steps 1 through 10 for all of the termini.

3.2.5.2 Domed end polish.

3.2.5.2.1 Standard procedure. This procedure will produce a terminus with a domed end polish. This procedure is typically used for single mode applications with a minimum return loss requirement of 30 db. Procedures for hand polishing are contained herein. Machine polishing may be used as an alternate method, provided the following requirements are satisfied:

a. The manufacturer's instructions will be rigidly adhered to, except that the polishing papers or disks shall be 5 µm aluminum oxide foam backed, 1 µm aluminum oxide mylar backed, and 0.1 µm diamond mylar backed as used in hand polishing. (NOTE: Alternate polishing materials may be used if authorized approval is obtained and the polishing machine includes the appropriate stops to prevent changes to the ferrule length.)

b. The machine polished terminus shall undergo the same quality check used for the manually polished terminus as described herein.

NOTE: The procedures contained herein should produce an optical terminus with a physical contact (PC) polish.

Step 1 - WARNING: Wear safety glasses when scoring the fiber to avoid possible eye injury.

Remove the terminus from the cure adapter and score the fiber close to the terminus tip at the epoxy interface using one short light stroke with cleaving tool (see figure 7A1-11). (NOTE: Do not break the fibers with the cleaving tool.) Pull off each fiber with a gentle, straight pull. Deposit the waste fiber in a container.

Source: https://assist.dla.mil -- Downloaded: 2016-12-10T08:13Z
Check the source to verify that this is the current version before use.

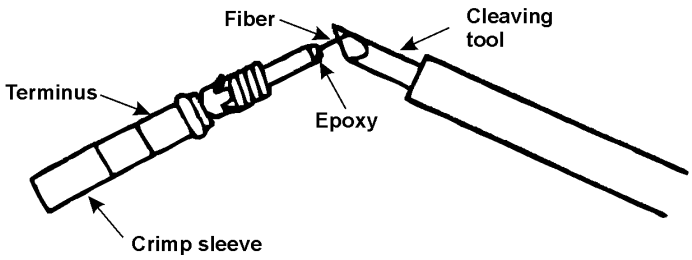

FIGURE 7A1-11. Scoring the fiber.

NOTE: The termini not being polished should be left in the cure adapters during the polishing process to protect the fibers from breakage.

NOTE: Before inserting the terminus into the polishing tool, the terminus may be held vertically and the end of the fiber polished off by lightly running the 5 µm polishing paper over the top of the terminus tip. (This is referred to as air polishing the terminus.)

Step 2 - Rotate the top half of the polishing tool 90 degrees counterclockwise and separate the top from the base.

Step 3 - Place the end of the terminus insertion tool at the rear of the crimp sleeve with the OFCC laid in the tool channel (see figure 7A1-12).

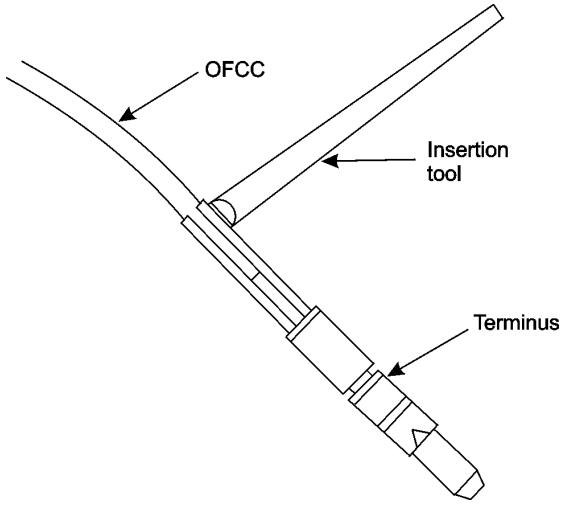

FIGURE 7A1-12. Placing the terminus in the insertion tool.

Step 4 - Insert the terminus into the center of the polishing tool top. Apply pressure with the insertion tool until the terminus snaps into place. Remove the tool by pulling straight back (see figure 7A1-13). (NOTE: Difficulty in inserting the terminus into the polishing tool may indicate epoxy on outside of the terminus which must be removed before proceeding.)

Source: https://assist.dla.mil -- Downloaded: 2016-12-10T08:13Z
Check the source to verify that this is the current version before use.

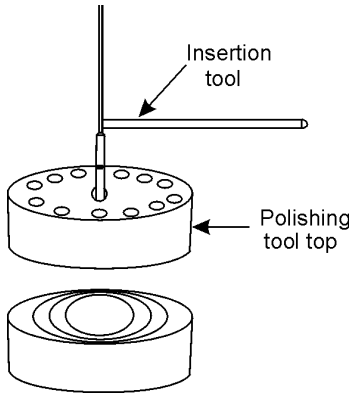

FIGURE 7A1-13. Inserting the terminus in the polishing tool.

Step 5 - Install the top half of the polishing tool on the bottom half and rotate it clockwise (90 degrees) until it locks in place.

Step 6 - Clean the glass polishing plate, the resilient pad, the backs of the polishing papers, and the surface of the polishing tool using a wipe dampened with alcohol. Blow all of the surfaces dry with air.

Step 7 - Place the 5 µm polishing paper on the glass plate and start polishing the terminus with very light pressure (the weight of the tool) using a figure-8 motion. Do not over polish the terminus. (NOTE: The first polish is complete when almost all of the epoxy is gone from the tip of the terminus.) Since the polishing time varies with the amount of epoxy present on the tip of the terminus, inspect the terminus tip frequently. Whenever the polishing tool is lifted, remove the grit from the tool and the terminus with air. When polishing is complete, clean the terminus and the polishing tool using a wipe dampened with alcohol and blow them dry with air. Perform a rough inspection of the ferrule end using the eye loop.

Step 8 - Place the resilient pad on top of the glass plate. Place 1 µm paper on the resilient pad. Wet the paper and polish the terminus with no pressure using a figure-8 motion for approximately 10 complete motions.

NOTE: The polish tool should hydroplane above the paper surface during this polish.

NOTE: The 1 µm polish is complete when all the epoxy is gone from the tip of the terminus.

NOTE: The 1 µm polish may be performed using dry paper.

Step 9 - Replace the 1 µm paper with the 0.1 µm paper. Wet the paper and polish the terminus with no pressure using a figure-8 motion for approximately 20 to 30 complete motions.

NOTE: The polish tool should hydroplane above the paper surface during this polish.

Source: https://assist.dla.mil -- Downloaded: 2016-12-10T08:13Z
Check the source to verify that this is the current version before use.

Step 10 - Rotate the top of the polishing tool counterclockwise (90 degrees) and separate the top from the base. Insert the terminus removal tool into the bottom of the terminus cavity of the polishing tool top and press on the hilt of the removal tool until the tool clicks into place (see figure 7A1-14). Depress the plunger and slide the terminus out of the polishing tool. Clean the terminus and the polishing tool with a wipe dampened with alcohol and blow them dry with air.

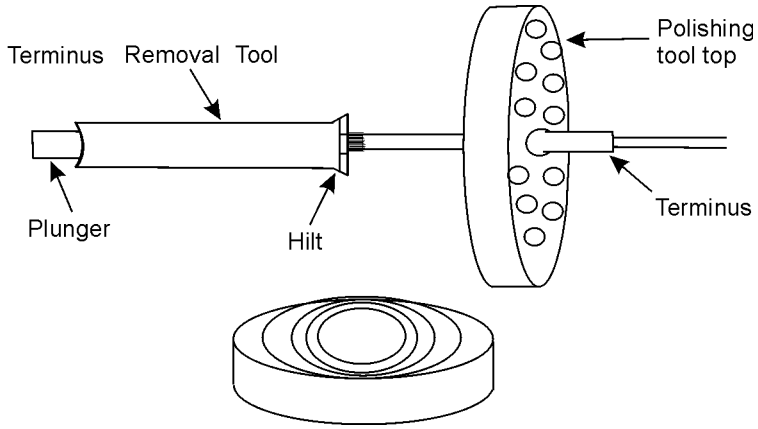

FIGURE 7A1-14. Removing the terminus in the polishing tool.

Step 11 - Repeat steps 1 through 10 for all of the termini.

3.2.6 Quality check.

Step 1 - Examine the terminus with the optical microscope to ensure that the optical surface is smooth and free of scratches, pits, chips, and fractures. If any defects are present, repeat the polish with the 0.1 µm paper or reterminate the fiber (see figure 7A1-15). (NOTE: Over polishing the fiber will increase the optical loss of the terminus. Do not polish the terminus more than necessary to pass the quality check.) A high intensity back light may be used to illuminate the fiber during the quality check.

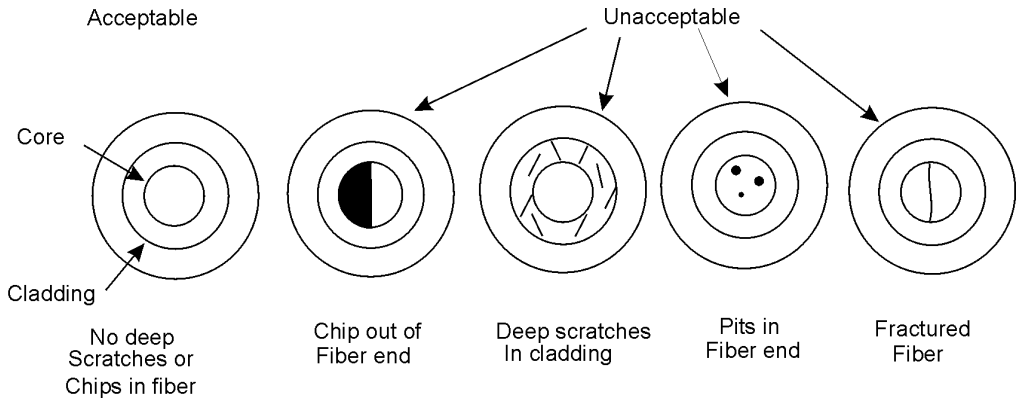

FIGURE 7A1-15. Quality check.

NOTE: Depending on the optical microscope used, viewing quality may be different.

NOTE: A small number of very light scratches (e.g. scratches that can barely be seen) is minimally acceptable.

Source: https://assist.dla.mil -- Downloaded: 2016-12-10T08:13Z
Check the source to verify that this is the current version before use.

3.2.7 Installation of the terminus into the Hermaphroditic jam nut mounted receptacle.

Step 1 - Place the end of the terminus insertion tool at the rear of the crimp sleeve with the OFCC laid in the tool channel (see figure 7A1-12).

Step 2 - Place the terminus in the proper cavity in the rear of the hermaphoriditic receptacle. Apply pressure with the insertion tool until the terminus snaps into place (see figures 7A1-16 and 7A1-17). Remove the tool by pulling straight back. (NOTE: A properly inserted terminus will have some axial "play" within the insert cavity.)

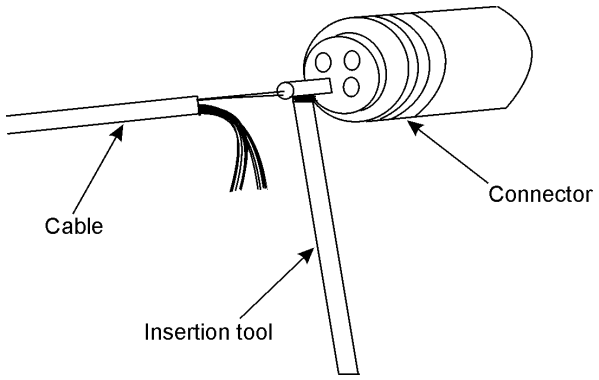

FIGURE 7A1-16. Installing the terminus in the connector.

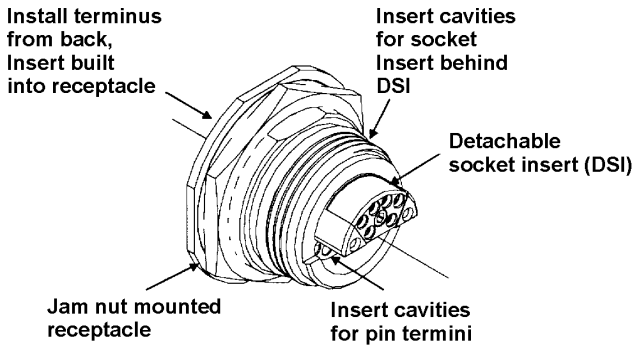

FIGURE 7A1-17. Position for installing terminus in the connector.

Step 3 - Repeat steps 1 and 2 for all of the termini.

Step 4 - Install the dust cover over the front of the hermaphroditic receptacle.

3.2.8 Removal of the termini from the connector insert.

NOTE: Perform this procedure only if the termini are to be removed from the connector.

NOTE: Proceed to step 1 below for socket termini. Proceed to step 2 below for pin termini.

Source: https://assist.dla.mil -- Downloaded: 2016-12-10T08:13Z
Check the source to verify that this is the current version before use.

Step 1 - CAUTION: Do not rotate the tool while the sleeve is in the insert.

Remove the detachable socket insert from the hermaphroditic receptacle.

Step 2 - Insert the terminus removal tool into the terminus cavity from the front of the insert and press on the hilt of the tool until it snaps into place (see figure 7A1-18). Depress the plunger to slide the terminus out the rear of the insert.

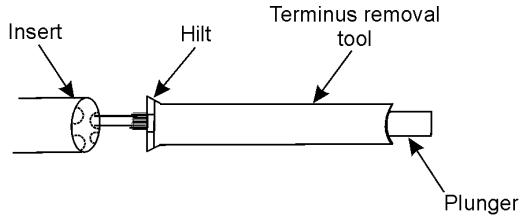

FIGURE 7A1-18. Removing the terminus from the connector insert.

Source: https://assist.dla.mil -- Downloaded: 2016-12-10T08:13Z
Check the source to verify that this is the current version before use.

3.3 Procedure II. Method 7A1-2 Installation of termini in hermaphroditic cable plugs onto pierside cable. Method 7A1-2 covers the termination procedure for placing a hermaphroditic cable plug on the end of a fiber optic cable.

3.3.1 Equipment and materials. The equipment and materials in table 7A1-III shall be used to perform this procedure:

TABLE 7A1-III. Equipment and materials.

Description	Quantity
Wipes (NAVSEA DWG 6872813-22 or equal)	As required
Ruler	1
Alcohol bottle with alcohol/2-propanol or equal (sealable type)	1
Canned air or compressed air	As required
Cable jacket stripping tool (NAVSEA DWG 6872813-8 or equal)	1
Masking tape	As required
Kevlar shears (NAVSEA DWG 6872813-16 or equal)	1
OFCC strip tool (NAVSEA DWG 6872813-10 or equal)	1
Safety glasses	1
Buffer strip tool (NAVSEA DWG 6872813-9 or equal)	1
Cleaning wire (NAVSEA DWG 6872813-32 or equal)	As required
Epoxy (MIL-PRF-24792)	As required
Syringe with dispensing needles (NAVSEA DWG 6872813-27 or equal)	As required
Crimp tool (NAVSEA DWG 6872813-17 or equal)	1
Razor blade	1
Cure adapters (NAVSEA DWG 6872813-19 or equal)	As required
Curing oven (NAVSEA DWG 6872813-19 or equal)	1
Cable stand (NAVSEA DWG 6872813-19 or equal)	1
Cable stand ring (NAVSEA DWG 6872813-19 or equal)	1
Cable clip (NAVSEA DWG 6872813-19 or equal)	1
Cleaver (NAVSEA DWG 6872813-7 or equal)	1
Polishing paper (5 um aluminum oxide, foam backed) (NAVSEA DWG 6872813-24 or equal)	As required
Polishing tool ceramic termini (NAVSEA DWG 6872813-18 or equal)	1

Source: https://assist.dla.mil -- Downloaded: 2016-12-10T08:13Z
Check the source to verify that this is the current version before use.

TABLE 7A1-III. Equipment and materials - continued.

Description	Quantity
Terminus insertion tool (NAVSEA DWG 6872813-2 or equal)	1
Terminus insertion tool 90° (NAVSEA DWG 6872813-15 or equal)	1
Glass polishing plate (NAVSEA DWG 6872813-3 or equal)	1
7X eye loupe	1
Polishing paper (1 um aluminum oxide, mylar backed) (NAVSEA DWG 6872813-23 or equal)	As required
Water bottle (sealable type)	1
Terminus removal tool (NAVSEA DWG 6872813-6 or equal)	1
Optical microscope 400X (NAVSEA DWG 6872813-28 or equal)	1
Alignment sleeve insertion and removal tool (ceramic termini)(NAVSEA DWG 6872813-4 or equal)	1
Polishing paper (0.1 um diamond, mylar backed) (NAVSEA DWG 6872813-41 or equal)	As required
Resilient pad (70 to 90 durometer) (NAVSEA DWG 6872813-42 or equal)	1
5/64 in Allen Wrench	1
0.050 in Allen wrench socket (3/8 in drive)	1
3/4 in crow foot wrench (3/8 in drive or a 1/4 in drive with 1/4 to 3/8 in adapter)	1
1-3/8 in wrench (open end)	1
3/4 in wrench (open end)	1
“O”-ring insertion tool (NAVSEA DWG 7325763-1H-6009AU or equal)	1
Music wire	As required
Adjustable wrench	1
Protective caps (plastic)	As required

CAUTION: Throughout the termination process, cleanliness is critical to obtaining a high optical quality connector. Make sure that your hands and the work area are as clean as possible to minimize the ingress of dirt into the connector parts.

NOTE: Verify that the epoxy shelf life has not expired. Do not use epoxy with an expiration date that has passed. Epoxy shelf life can be extended if the epoxy is refrigerated. Contact the epoxy vendor or the Naval Surface Warfare Center (see 1.1.1) for additional information.

Source: https://assist.dla.mil -- Downloaded: 2016-12-10T08:13Z
Check the source to verify that this is the current version before use.

3.3.2 Cable preparation.

Step 1 - Ensure the cable is the correct type as specified in NAVSEA drawing 7325759 and has a length of 152 m (500 ft).

Step 2 - Clean the outer cable jacket that will be in contact with the connector with a wipe dampened with alcohol and blow it dry with air.

NOTE: Keep the cable and connector parts free from oil, dirt and grease throughout the installation procedure. If cleaning is necessary, use a wipe dampened with alcohol and blow the part dry with air.

Step 3 - Cut the cable ends so that the first (outer) and second (inner) layers of the outer cable jacket are flush with the breakout cables.

Step 4 - Place the cable grip on each end of the cable. Position the cable grip so that the end with the cable loop faces the cable end.

NOTE: Compress cable grip and slide along cable so that each cable grip is at least 1 m (3 ft) from the cable end. Loop in cable grip is pointed toward end of cable.

3.3.3 Strain relief preparation.

Step 1 - Slide the connector parts onto the cable in the order indicated below (see figure 7A1-19).

a. Flex fitting

b. Retaining nut

c. Conical nut washer [NOTE: Side of washer with the larger diameter contact surface (concave surface) is placed on cable first].

d. Compression nut

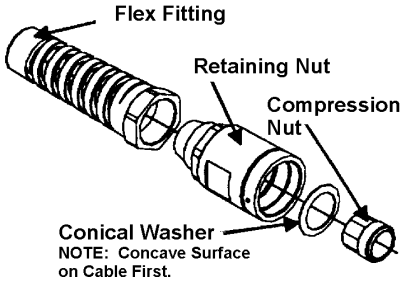

FIGURE 7A1-19. Cable plug components to slide onto cable.

Step 2 - Mark the cable jacket approximately 165 mm (6.5 in) from the end and strip back the first layer of the outer cable jacket to the mark using the cable stripper. Fold back the Kevlar strength members.

Step 3 - CAUTION: Do not cut or nick the individual breakout cable jackets.

Strip back the second layer of the outer cable jacket using the cable stripper. Strip back to the same length as the first layer of the outer jacket. Fold back the Kevlar strength members and temporary tape them to the first layer of the outer cable jacket.

Source: https://assist.dla.mil -- Downloaded: 2016-12-10T08:13Z
Check the source to verify that this is the current version before use.

Step 4 - Cut off any fillers using the Kevlar shears.

NOTE: Cable construction is 9 around 3. Three of the single fiber cables may be wrapped around tape and mistaken as a central strength member.

Step 5 - Remove any water blocking material, clean the single fiber cable's using a wipe dampened with alcohol and blow them dry with air.

3.3.4 Securing the strain relief.

Step 1 - Remove the tape from the Kevlar strength members and fold forward.

Step 2 - Slide the compression ring to the end of the outer cable jacket (see figure 7A1-20).

NOTE: The grooved side of the compression ring should face the compression nut.

Step 3 - Fold the Kevlar strength members back over the compression ring and the cable in the direction of the compression nut.

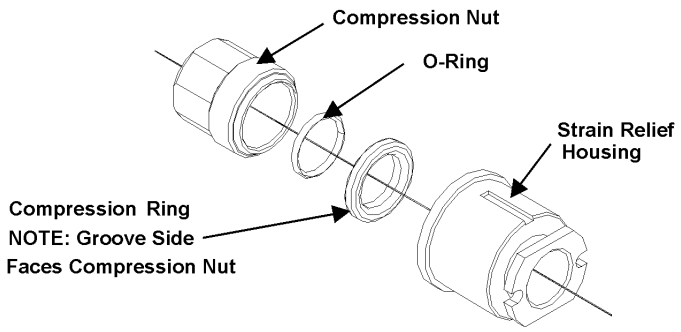

FIGURE 7A1-20. Strain relief assembly.

Step 4 - Place the o-ring on the o-ring insertion tool by forcing the o-ring up the cone to the larger end of the tool (see figure 7A1-21).

NOTE: Do not apply lubricant to the o-ring.

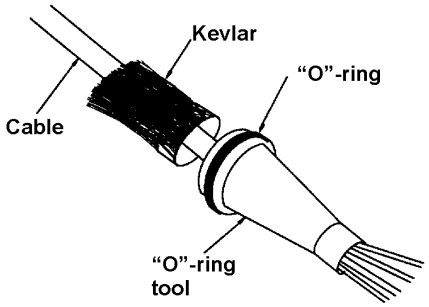

FIGURE 7A1-21. Installing the O-ring.

Step 5 - Slide the o-ring tool up the breakout cables (larger end first), then over the compression ring covered with the Kevlar strength members.

Source: https://assist.dla.mil -- Downloaded: 2016-12-10T08:13Z
Check the source to verify that this is the current version before use.

Step 6 - Force the o-ring over the compression ring onto the Kevlar (see figure 7A1-21).

NOTE: Kevlar is to be evenly distributed around the compression ring and ALL STRANDS to be tight against the outside diameter of the compression ring.

Step 7 - Remove the o-ring tool.

Step 8 - Fold the Kevlar strength members forward over the 0-ring and the compression ring.

NOTE: Tape the Kevlar strength members to the breakout cables to ease the installation of the strain relief housing.

Step 9 - Slide the strain relief housing up the cable to the compression ring. Gently feed the breakout cables and Kevlar strength members through the strain relief housing.

Step 10 - Slide the compression nut up to the strain relief housing. Thread the strain relief nut into the strain relief housing. Tighten the parts by hand.

Step 11 - Place a 3/4 in crows foot wrench with a torque wrench on the compression nut and a 3/4 in wrench on the strain relief housing.

Step 12 - Apply a 5.65 N m (50 in-lb) torque on the compression nut. Remove the tools once tightened.

NOTE: Use care to not nick or scratch the connector coating during assembly.

Step 13 - Remove the tape and trim the Kevlar strength members, using Kevlar shears, approximately 2.5 cm (1 in) beyond the face of the strain relief nut.

3.3.5 Fiber preparation.

Step 1 - Identify and mark one end of the cable as cable end “A” and the other as cable end “B”.

NOTE: The 12 “breakout” cables within the two outer cable jackets are also referred to as single fiber cables and OFCC’s (Optical Fiber Cable Components) in this procedure.

NOTE: This marking is used for termini placement on the single fiber cables in conjunction with table 7A1-IV or 7A1-V.

Source: https://assist.dla.mil -- Downloaded: 2016-12-10T08:13Z
Check the source to verify that this is the current version before use.

TABLE 7A1-IV. Termini type to be placed on each single fiber cable (except for Version IV).

Cable End A	Cable End A	Cable Identification		Cable End B	Cable End B
Termini Type	Connector Pin-Out	By Number	By Color	Connector Pin-Out	Termini Type
MM Socket	1J	1 = MM1	Blue	1P	MM Pin
MM Socket	2J	2 = MM2	Orange	2P	MM Pin
MM Socket	3J	3 = MM3	Green	3P	MM Pin
MM Socket	4J	4 = MM4	Brown	4P	MM Pin
MM Pin	1P	5 = MM5	Slate (Gray)	1J	MM Socket
MM Pin	2P	6 = MM6	White	2J	MM Socket
MM Pin	3P	7 = MM7	Red	3J	MM Socket
MM Pin	4P	8 = MM8	Black	4J	MM Socket
SM Socket	5J	9 = SM1	Yellow	5P	SM Pin
SM Socket	6J	10 = SM2	Violet (Purple)	6P	SM Pin
SM Pin	5P	11 = SM3	Rose	5J	SM Socket
SM Pin	6P	12 = SM4	Aqua	6J	SM Socket

Source: https://assist.dla.mil -- Downloaded: 2016-12-10T08:13Z
Check the source to verify that this is the current version before use.

TABLE 7A1-V. Termini type to be placed on each single fiber cable (Version IV).

Cable End A	Cable End A	Cable Identification		Cable End B	Cable End B
Termini Type	Connector Pin-Out	By Number	By Color	Connector Pin-Out	Termini Type
MM Socket	1J	1 = MM1	Blue	1P	MM Pin
MM Socket	2J	2 = MM2	Orange	2P	MM Pin
MM Socket	3J	3 = MM3	Green	3P	MM Pin
MM Pin	1P	4 = MM4	Brown	1J	MM Socket
MM Pin	2P	5 = MM5	Slate (Gray)	2J	MM Socket
MM Pin	3P	6 = MM6	White	3J	MM Socket
SM Socket	4J	7 = SM1	Red	4P	SM Pin
SM Socket	5J	8 = SM2	Black	5P	SM Pin
SM Socket	6J	9 = SM3	Yellow	6P	SM Pin
SM Pin	4P	10 = SM4	Violet (Purple)	4J	SM Socket
SM Pin	5P	11 = SM5	Rose	5J	SM Socket
SM Pin	6P	12 = SM6	Aqua	6J	SM Socket

NOTE: For Version IV networks, the following

NOTE: For Version IV networks, the following

Step 2 - Trim the single fiber cables designated for socket termini to the A dimension specified in table 7A1-V using the Kevlar shears (see figure 7A1-22).

NOTE: No crimp sleeve is used in this cable plug termination.

Source: https://assist.dla.mil -- Downloaded: 2016-12-10T08:13Z
Check the source to verify that this is the current version before use.

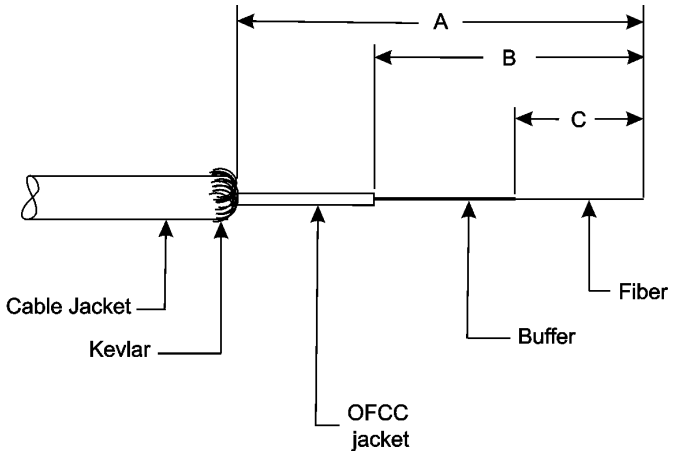

FIGURE 7A1-22. Cable stripping dimensions.

Step 3 - Trim the single fiber cables designated for pin termini to the A dimension specified in table 7A1-V using the Kevlar shears (see figure 7A1-22).

Step 4 - Remove the single fiber cable jackets back to dimension B in table 7A1-V using the OFCC (breakout cable) stripper.

NOTE: The optimum way to remove the OFCC jackets is to ring cut the jacket with the OFCC stripper and pull the jacket off by hand. Pushing off the OFCC jacket with a tightly held OFCC stripper can lead to fiber breakage.

Step 5 - Mark the buffered fiber with the color code or single fiber cable number.

NOTE: One method is to use a portion of the single fiber cable that contains the color or single fiber cable number as a sleeve and place it on each buffered fiber.

Step 6 - Trim the single fiber cable Kevlar so that it does not extend past the single fiber cable jacket.

TABLE 7A1-VI. Cable stripping dimensions.

Termini Configuration	Dimensions mm (in)		
	A	B	C
Socket	137 (5.39)	131 (5.16)	23 (0.91)
Pin	131 (5.16)	125 (4.92)	23 (0.91)

Step 7 - WARNING: Wear safety glasses when removing the fiber buffer and coating to avoid possible eye injury.

Remove the fiber buffers and coatings back to dimension C in table 7A1-V using the buffer stripper. Remove the buffer and coating in small sections (approximately 6 mm (0.25 in) at a time.)

Source: https://assist.dla.mil -- Downloaded: 2016-12-10T08:13Z
Check the source to verify that this is the current version before use.

NOTE: Normally, the buffer and coating are tightly adhered to one another and come off of the fiber at the same time.

Step 8 - CAUTION: The uncoated fiber is in its most vulnerable state. Take extreme care not to damage the fiber.

CAUTION: Breakage of any one fiber from this point until the connector is completely assembled will require repetition of this and the following steps in order to maintain approximately equal length of all the fibers in the cable.

Remove any residual coating material from the bare fibers with a wipe dampened with alcohol. Wipe only once from the end of the buffer towards the end of the fiber. (NOTE: Do not repeatedly wipe the bare fiber as this will weaken the fiber.)

3.3.6 Installation of the termini onto the fibers.

NOTE: This procedure describes the process for installing ceramic termini onto either multimode or single-mode fibers. The termini use epoxy to secure the fiber.

Step 1 - Turn on the curing oven so that it attains the proper temperature before the termini are placed within it (approximately 20 minutes).

Step 2 - Inspect the terminus and verify that the ferrule hole is free and clean of dirt. This can be accomplished by holding the front of the terminus up to a light and verifying that the light is visible from the rear of the terminus. If light cannot be seen through the terminus, push music wire through the terminus hole to clear it. Then blow dry air through the hole to remove any debris.

Step 3 - CAUTION: Do not introduce large air bubbles into the epoxy during the mixing process. Large air bubbles in the epoxy can lead to connector failure during temperature extremes.

Remove the divider from a 2-part epoxy package and mix the two parts together until the epoxy is a smooth uniform color (see figure 7A1-23). The epoxy can be mixed by either repeatedly rolling the divider over the package or gently sliding the divider over the package.

NOTE: Alternatively, the epoxy may be mixed by massaging the epoxy package by hand.

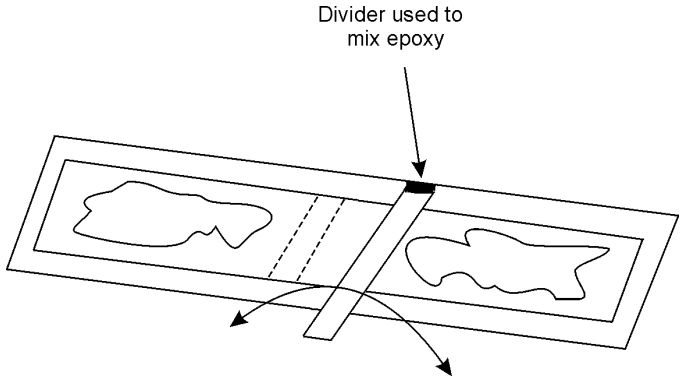

FIGURE 7A1-23. Mixing the epoxy.

Step 4 - Install the syringe tip on the syringe, remove the plunger, and squeeze the epoxy into the syringe. Replace the plunger.

Source: https://assist.dla.mil -- Downloaded: 2016-12-10T08:13Z
Check the source to verify that this is the current version before use.

Step 5 - WARNING: Wear safety glasses while dispensing the epoxy to avoid possible eye injury.

Remove air pockets in the syringe by holding the tip of the syringe upward and dispensing epoxy onto a wipe until it runs free and clear.

Step 6 - Slide the terminus, rear first, onto the syringe tip (see figure 7A1-24). Keeping the syringe vertical, depress the plunger and slowly inject epoxy into the terminus until it escapes out of the ferrule, forming a very small bead. (NOTE: Do not overfill. Be extremely careful not to get epoxy on the pin spring or other terminus moving parts.)

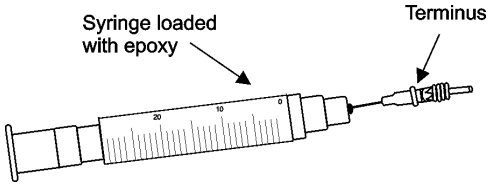

FIGURE 7A1-24. Injecting epoxy into the terminus.

Step 7 - Withdraw the syringe from the terminus. Maintain some pressure on the plunger as the syringe is withdrawn so that the terminus is completely filled with epoxy. Using a wipe dampened with alcohol, wipe away any epoxy on the outer diameter of ferrule without disturbing the epoxy bead.

NOTE: Alternatively, the terminus may be completely filled by maintaining a light pressure on the syringe plunger and allowing the epoxy to push the terminus off of the syringe tip.

NOTE: At this point, the terminus may be inserted into the cure adapter. Refer to Step 11 for insertion of the terminus into the cure adapter.

Step 8 - Insert the fiber into the rear of the terminus (see figure 7A1-25). Gently work the fiber through the terminus until the buffer seats against the rear of the ferrule. The buffered fiber should come up to the rear of the terminus. Once inserted, do not allow the fiber to slip back.

NOTE: Rotate the fiber as it moves through the connector ferrule. This evenly distributes epoxy around the fiber in the terminus hole.

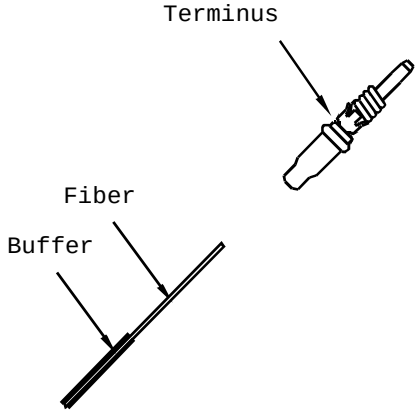

FIGURE 7A1-25. Inserting the fiber into the terminus.

Source: https://assist.dla.mil -- Downloaded: 2016-12-10T08:13Z
Check the source to verify that this is the current version before use.

Step 9 - Verify that there is a small amount of epoxy around the fiber where it protrudes from the ferrule. If it is found that there is no small bead of epoxy on the terminus tip, carefully add a small amount of epoxy around the fiber. (NOTE: There should only be a small amount of epoxy around the fiber to support it later during the polishing process. If too much epoxy is around the fiber during the curing process it may cause the fiber to crack.)

NOTE: The terminus must be held to the fiber until the epoxy is fully cured. This may be accomplished utilizing a special terminus/fiber holding fixture, a small heat shrink sleeve applied over the rear of the terminus (and a short length of the fiber), or tape.

Step 10 - Using a wipe dampened with alcohol, carefully wipe away any excess epoxy on the fiber that is more than 2 mm (0.08 in) from the ferrule tip surface.

Step 11 - Insert the terminus into the cure adapter until it snaps into place (see figure 7A1-26).

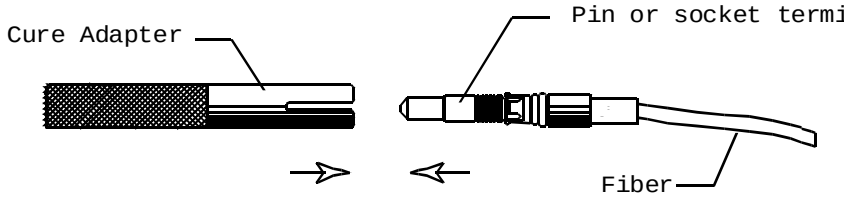

FIGURE 7A1-26. Inserting a terminus in a cure adapter.

Step 12 - Repeat steps 2 through 13 for each fiber to be terminated.

Step 13 - Place the cure adapters in the curing oven, and position the cable vertically over the oven using the cable stand, cable stand ring and cable clip (see figure 7A1-27). Cure the epoxy for a minimum of 10 minutes (maximum of 20 minutes) at 120°C (248°F). (NOTE: When the cable is positioned above the terminus, make sure that no bends are placed in the buffered fibers. Each buffered fiber should enter the terminus parallel to the terminus.)

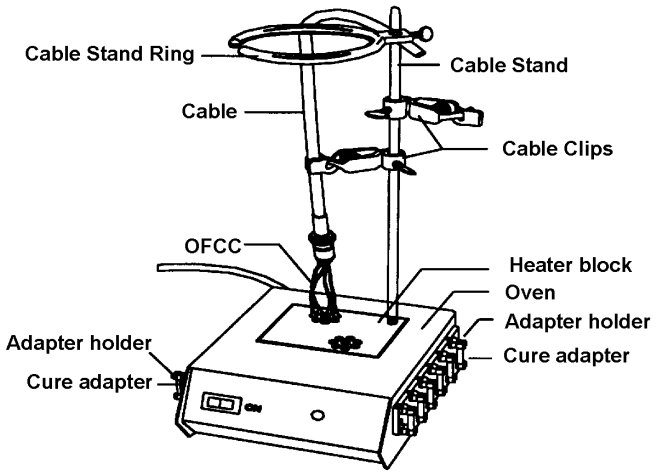

FIGURE 7A1-27. Termini in the curing oven.

Source: https://assist.dla.mil -- Downloaded: 2016-12-10T08:13Z
Check the source to verify that this is the current version before use.

Step 14 - Turn the curing oven off and remove the cure adapters and termini from the curing oven. Allow the cure adapters and termini to cool for approximately 4 minutes.

3.3.7 Polishing the fiber ends.

NOTE: Use the flat end polish for termini on multimode fiber and a domed end polish for termini on single mode fiber.

3.3.7.1 Flat end polish. This procedure will produce a terminus with a flat end polish. This procedure is typically used for multimode applications. Procedures for hand polishing are contained herein. Machine polishing may be used as an alternate method, provided the following requirements are satisfied:

a. The manufacturer's instructions will be rigidly adhered to, except that the polishing papers or disks shall be 5 µm aluminum oxide foam backed, 1 µm aluminum oxide mylar backed, and 0.1 µm diamond mylar backed as used in hand polishing. (NOTE: Alternate polishing materials may be used if authorized approval is obtained and the polishing machine includes the appropriate stops to prevent changes to the ferrule length.)

b. The machine polished terminus shall undergo the same quality check used for the manually polished terminus as described herein.

NOTE: The procedures contained herein should produce an optical terminus with a physical contact (PC) polish.

Step 1 - WARNING: Wear safety glasses when scoring the fiber to avoid possible eye injury.

Remove the terminus from the cure adapter and score the fiber close to the terminus tip at the epoxy interface using one short light stroke with cleaving tool (see figure 7A1-28). (NOTE: Do not break the fibers with the cleaving tool.) Pull off each fiber with a gentle, straight pull. Deposit the waste fiber in a container.

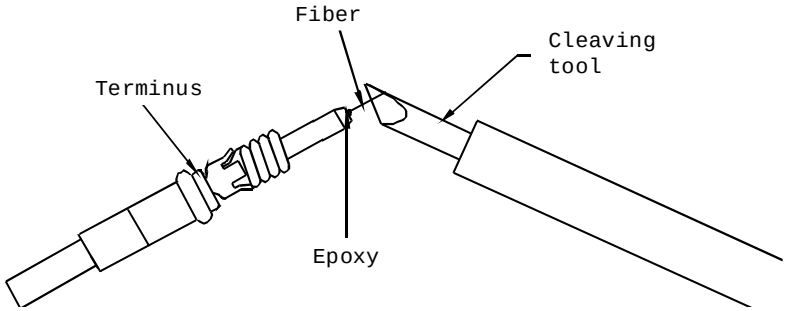

FIGURE 7A1-28. Scoring the fiber.

NOTE: The termini not being polished should be left in the cure adapters during the polishing process to protect the fibers from breakage.

NOTE: Before inserting the terminus into the polishing tool, the terminus may be held vertically and the end of the fiber polished off by lightly running the 5 µm polishing paper over the top of the terminus tip. (This is referred to as air polishing the terminus.)

Step 2 - Rotate the top half of the polishing tool 90 degrees counterclockwise and separate the top from the base.

Step 3 - Place the end of the terminus insertion tool at the rear of the crimp sleeve with the OFCC laid in the tool channel (see figure 7A1-29).

Source: https://assist.dla.mil -- Downloaded: 2016-12-10T08:13Z
Check the source to verify that this is the current version before use.

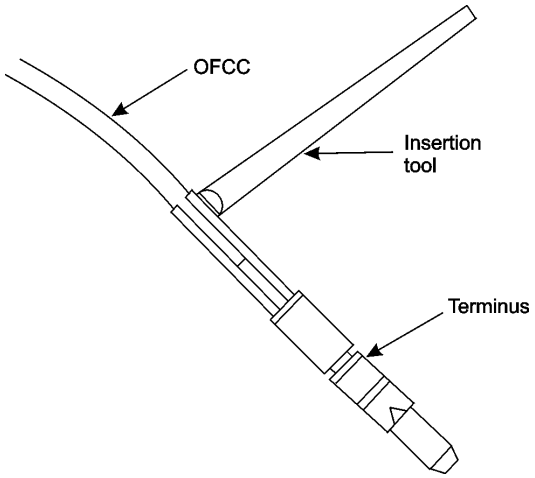

FIGURE 7A1-29. Placing the terminus in the insertion tool.

Step 4 - Insert the terminus into the center of the polishing tool top. Apply pressure with the insertion tool until the terminus snaps into place. Remove the tool by pulling straight back (see figure 7A1-30). (NOTE: Difficulty in inserting the terminus into the polishing tool may indicate epoxy on outside of the terminus which must be removed before proceeding.)

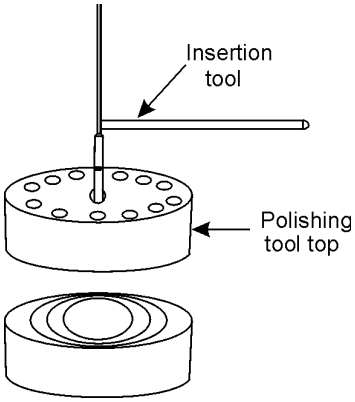

FIGURE 7A1-30. Insertion the terminus in the polishing tool.

Step 5 - Install the top half of the polishing tool on the bottom half and rotate it clockwise (90 degrees) until it locks in place.

Step 6 - Clean the glass polishing plate, the backs of the polishing papers, and the surface of the polishing tool using a wipe dampened with alcohol. Blow all of the surfaces dry with air.

Step 7 - Place the 5 µm polishing paper on the glass plate and start polishing the terminus with very light pressure (the weight of the tool) using a figure-8 motion. Do not overpolish the terminus. (NOTE: The first polish is complete when almost all of the epoxy is gone from the tip of the terminus.) Since the polishing time varies with the amount of epoxy present on the tip of the terminus, inspect the terminus tip frequently. Whenever the polishing tool is lifted, remove the grit

Source: https://assist.dla.mil -- Downloaded: 2016-12-10T08:13Z
Check the source to verify that this is the current version before use.

from the tool and the terminus with air. When polishing is complete, clean the terminus and the polishing tool using a wipe dampened with alcohol and blow them dry with air. Perform a rough inspection of the ferrule end using the eye loop.

Step 8 - Replace the 5 µm paper with the 1 µm paper. Polish the terminus with very light pressure using a figure-8 motion for approximately 10 to 20 complete motions.

NOTE: The 1 µm polish is complete when all of the epoxy is gone from the tip of the terminus.

Step 9 - Replace the 1 µm paper with the 0.1 µm paper. Wet the paper and polish the terminus with very light pressure using a figure-8 motion for approximately 10 to 20 complete motions.

NOTE: The final polish may also be performed using dry paper.

Step 10 - Rotate the top of the polishing tool counterclockwise (90 degrees) and separate the top from the base. Insert the terminus removal tool into the bottom of the terminus cavity of the polishing tool top and press on the hilt of the removal tool until the tool clicks into place (see figure 7A1-31). Depress the plunger and slide the terminus out of the polishing tool. Clean the terminus and the polishing tool with a wipe dampened with alcohol and blow them dry with air.

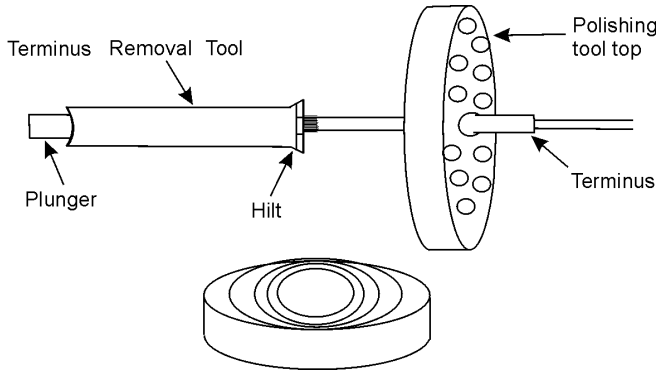

FIGURE 7A1-31. Removing the terminus from the polishing tool.

Step 11 - Repeat steps 1 through 10 for all of the termini.

3.3.7.2 Domed end polish.

3.3.7.2.1 Standard procedure. This procedure will produce a terminus with a domed end polish. This procedure is typically used for single mode applications with a minimum return loss requirement of 30 db. Procedures for hand polishing are contained herein. Machine polishing may be used as an alternate method, provided the following requirements are satisfied:

a. The manufacturer's instructions will be rigidly adhered to, except that the polishing papers or disks shall be 5 µm aluminum oxide foam backed, 1 µm aluminum oxide mylar backed, and 0.1 µm diamond mylar backed as used in hand polishing. (NOTE: Alternate polishing materials may be used if authorized approval is obtained and the polishing machine includes the appropriate stops to prevent changes to the ferrule length.)

b. The machine polished terminus shall undergo the same quality check used for the manually polished terminus as described herein.

Source: https://assist.dla.mil -- Downloaded: 2016-12-10T08:13Z
Check the source to verify that this is the current version before use.

NOTE: The procedures contained herein should produce an optical terminus with a physical contact (PC) polish.

Step 1 - WARNING: Wear safety glasses when scoring the fiber to avoid possible eye injury.

Remove the terminus from the cure adapter and score the fiber close to the terminus tip at the epoxy interface using one short light stroke with cleaving tool (see figure 7A1-32). (NOTE: Do not break the fibers with the cleaving tool.) Pull off each fiber with a gentle, straight pull. Deposit the waste fiber in a container.

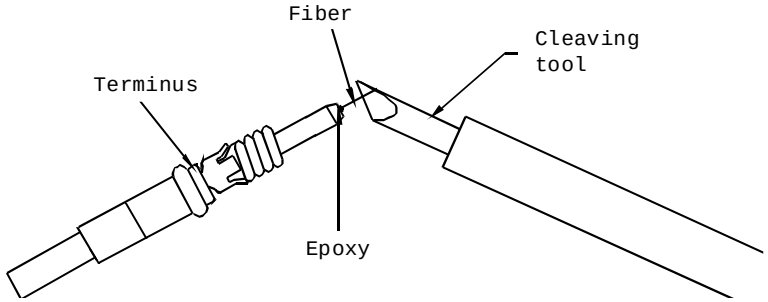

FIGURE 7A1-32. Scoring the fiber.

NOTE: The termini not being polished should be left in the cure adapters during the polishing process to protect the fibers from breakage.

NOTE: Before inserting the terminus into the polishing tool, the terminus may be held vertically and the end of the fiber polished off by lightly running the 5 µm polishing paper over the top of the terminus tip. (This is referred to as air polishing the terminus.)

Step 2 - Rotate the top half of the polishing tool 90 degrees counterclockwise and separate the top from the base.

Step 3 - Place the end of the terminus insertion tool at the rear of the crimp sleeve with the OFCC laid in the tool channel (see figure 7A1-33).

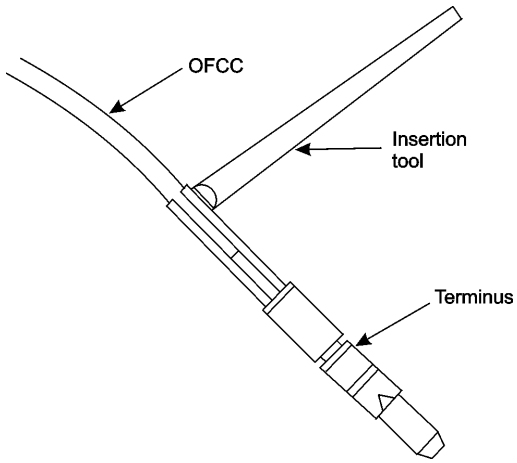

FIGURE 7A1-33. Placing the terminus in the insertion tool.

Source: https://assist.dla.mil -- Downloaded: 2016-12-10T08:13Z
Check the source to verify that this is the current version before use.

Step 4 - Insert the terminus into the center of the polishing tool top. Apply pressure with the insertion tool until the terminus snaps into place. Remove the tool by pulling straight back (see figure 7A1-34). (NOTE: Difficulty in inserting the terminus into the polishing tool may indicate epoxy on outside of the terminus which must be removed before proceeding.)

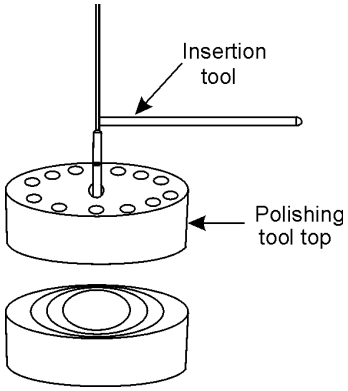

FIGURE 7A1-34. Inserting the terminus in the polishing tool.

Step 5 - Install the top half of the polishing tool on the bottom half and rotate it clockwise (90 degrees) until it locks in place.

Step 6 - Clean the glass polishing plate, the resilient pad, the backs of the polishing papers, and the surface of the polishing tool using a wipe dampened with alcohol. Blow all of the surfaces dry with air.

Step 7 - Place the 5 µm polishing paper on the glass plate and start polishing the terminus with very light pressure (the weight of the tool) using a figure-8 motion. Do not overpolish the terminus. (NOTE: The first polish is complete when almost all of the epoxy is gone from the tip of the terminus.) Since the polishing time varies with the amount of epoxy present on the tip of the terminus, inspect the terminus tip frequently. Whenever the polishing tool is lifted, remove the grit from the tool and the terminus with air. When polishing is complete, clean the terminus and the polishing tool using a wipe dampened with alcohol and blow them dry with air. Perform a rough inspection of the ferrule end using the eye loop.

Step 8 - Place the resilient pad on top of the glass plate. Place 1 µm paper on the resilient pad. Wet the paper and polish the terminus with no pressure using a figure-8 motion for 10 complete motions.

NOTE: The polish tool should hydroplane above the paper surface during this polish.

NOTE: The 1 µm polish is complete when all the epoxy is gone from the tip of the terminus.

NOTE: The 1 µm polish may be performed using dry paper.

Step 9 - Replace the 1 µm paper with the 0.1 µm paper. Wet the paper and polish the terminus with no pressure using a figure-8 motion for 20 to 30 complete motions.

NOTE: The polish tool should hydroplane above the paper surface during this polish.

Source: https://assist.dla.mil -- Downloaded: 2016-12-10T08:13Z
Check the source to verify that this is the current version before use.

Step 10 -Rotate the top of the polishing tool counterclockwise (90 degrees) and separate the top from the base. Insert the terminus removal tool into the bottom of the terminus cavity of the polishing tool top and press on the hilt of the removal tool until the tool clicks into place (see figure 7A1-35). Depress the plunger and slide the terminus out of the polishing tool. Clean the terminus and the polishing tool with a wipe dampened with alcohol and blow them dry with air.

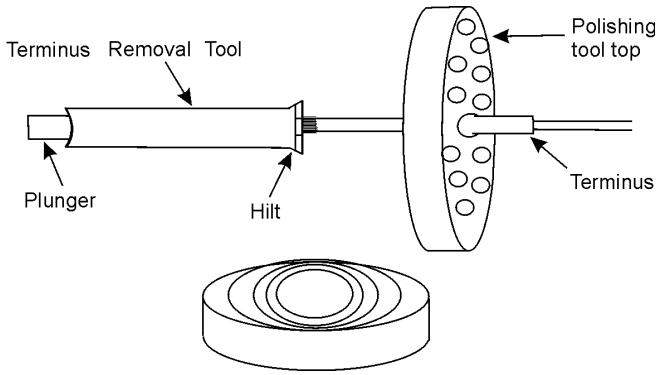

FIGURE 7A1-35. Removing the terminus from the polishing tool.

Step 11 -Repeat steps 1 through 10 for all of the termini.

3.3.8 Quality check.

Step 1 - Examine the terminus with the optical microscope to ensure that the optical surface is smooth and free of scratches, pits, chips, and fractures. If any defects are present, repeat the polish with the 0.1 µm paper or reterminate the fiber (see figure 7A1-36). (NOTE: Overpolishing the fiber will increase the optical loss of the terminus. Do not polish the terminus more than necessary to pass the quality check.) A high intensity back light may be used to illuminate the fiber during the quality check.

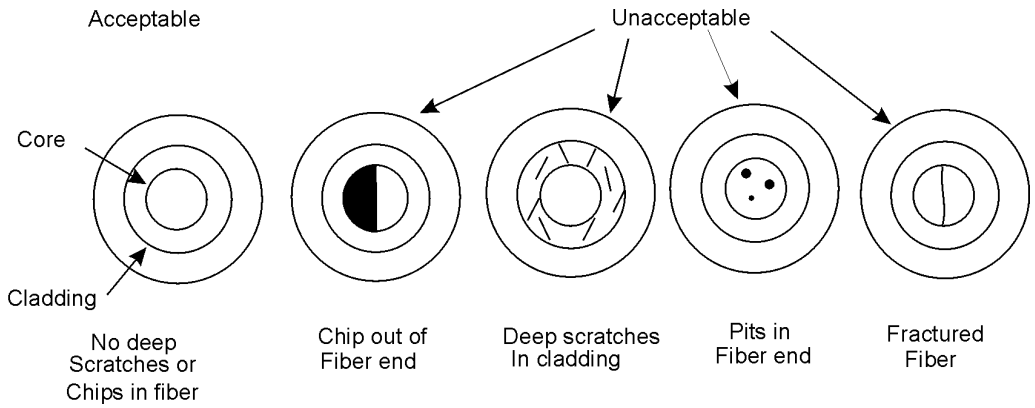

FIGURE 7A1-36. Quality check.

NOTE: Depending on the optical microscope used, viewing quality may be different.

NOTE: A small number of very light scratches (e.g. scratches that can barely be seen) is minimally acceptable.

Source: https://assist.dla.mil -- Downloaded: 2016-12-10T08:13Z
Check the source to verify that this is the current version before use.

3.3.9 Installation of the terminus into the connector insert.

Step 1 - Fit the spacing shafts of the insert into the notches in the face of the strain relief housing until they snap into place (see figure 7A1-37).

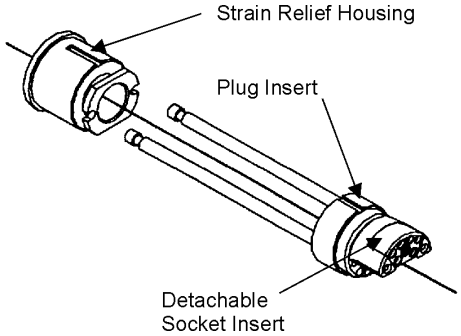

FIGURE 7A1-37. Installing the spacing shafts of the plug insert.

Step 2 - Place the end of the terminus insertion tool at the rear of the terminus with the OFCC laid in the tool channel (see figure 7A1-33).

Step 3 - Place the terminus in the proper cavity in the rear of the plug insert. Apply pressure with the insertion tool until the terminus snaps into place (see figure 7A1-38). Remove the tool by pulling straight back. (NOTE: A properly inserted terminus will have some axial "play" within the insert cavity.)

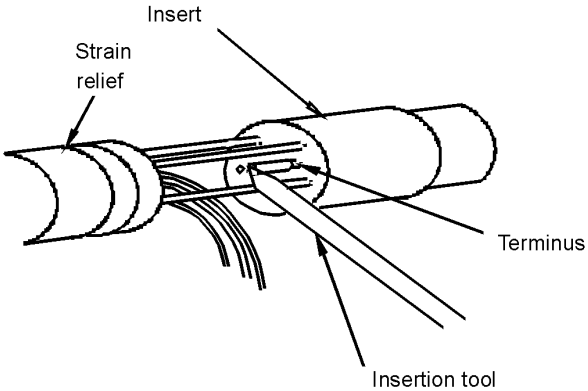

FIGURE 7A1-38. Installing the terminus using insertion tool.

Step 4 - Repeat steps 2 and 3 for all of the termini.

3.3.10 Final assembly of cable plug.

NOTE: Take care to not pinch or twist the buffered fibers during this procedure.

NOTE: Ensure that the detachable socket insert is fastened to the plug insert prior to plug insert placement into the plug housing. O-ring damage will result if the detachable socket insert is not fastened to the plug insert prior to placement into the plug housing. Use a 5/64 inch Allen wrench to fasten the detachable socket insert to the plug insert.

Source: https://assist.dla.mil -- Downloaded: 2016-12-10T08:13Z
Check the source to verify that this is the current version before use.

Step 1 - Slide the strain relief/cable assembly partially into the plug housing (see figure 7A1-39).

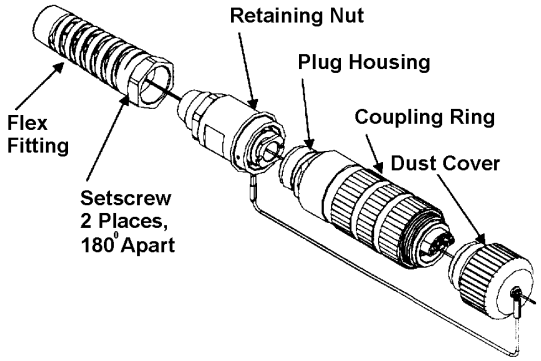

FIGURE 7A1-39. Cable plug final assembly.

Step 2 - Rotate the plug housing until the slot in the strain relief housing aligns with the detent inside the plug housing.

Step 3 - Once aligned, fully seat the strain relief housing by sliding it the rest of the way into the plug housing.

Step 4 - Slide the retaining nut up to the plug housing and thread the retaining nut onto the plug housing until hand tight.

Step 5 - Place the coupling ring in the back position and engage the locking mechanism.

NOTE: Coupling ring has a keyed position that prevents rotation with the plug housing. Place the coupling ring in the back position to activate the rotation prevention key prior to applying the torque.

Step 6 - Place a 3.5 cm (1-3/8 in) wrench on the retaining nut flats and a combination torque wrench/strap wrench around the coupling ring.

Step 7 - Apply a 16 +1/-0 N m (140 +10/-0 in-lb) torque on the coupling ring. Remove tools once tightened.

NOTE: Use care to not nick or scratch the connector coating during assembly.

Step 8 - Slide the flex fitting up to the retaining nut and thread the flex fitting into the retaining nut until hand tight.

Step 9 - Place a 3.5 cm (1-3/8 in) wrench on the flex fitting and a combination torque wrench/strap wrench around the retaining nut.

Step 10 - Apply a 4.5 +0.5/-0.0 N m (40 +5/-0 in-lb) torque on the flex fitting. Remove the tools once tightened.

NOTE: Use care to not nick or scratch the connector coating during assembly.

Step 11 - Place a 0.050 in Allen wrench on one of the two 4-40 set screws located on the flex fitting flange (see figure 7A1-39) and torque until secure.

NOTE: Do not tighten set screw to the point where flex fitting deforms.

Step 12 - Place a 0.050 in Allen wrench on the other 4-40 set screws located 180 degrees from the first one on the flex fitting flange (see figure 7A1-39) and torque until secure.

Source: https://assist.dla.mil -- Downloaded: 2016-12-10T08:13Z
Check the source to verify that this is the current version before use.

NOTE: Do not tighten set screw to the point where flex fitting deforms.

Step 13- Install the cable plug dust cover over the front of the connector.

3.3.11 Removal of the termini from the connector insert.

NOTE: Perform this procedure only if the termini are to be removed from the connector.

NOTE: Proceed to step 1 below for socket termini. Proceed to step 2 below for pin termini.

Step 1 - CAUTION: Do not rotate the tool while the sleeve is in the insert.

Remove the detachable socket insert from the plug insert.

Step 2 - Insert the terminus removal tool into the terminus cavity from the front of the insert and press on the hilt of the tool until it snaps into place (see figure 7A1-40). Depress the plunger to slide the terminus out the rear of the insert.

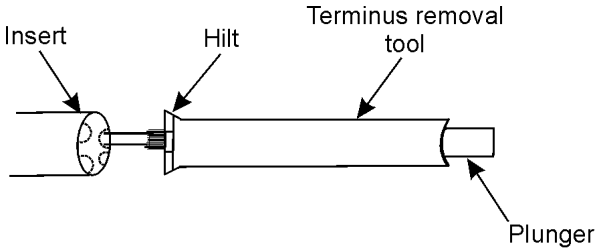

FIGURE 7A1-40. Removing the terminus from the insert.

Source: https://assist.dla.mil -- Downloaded: 2016-12-10T08:13Z
Check the source to verify that this is the current version before use.

METHOD 7B1

SHIPBOARD INTERCONNECTION BOX INTERIOR CABLE ROUTING

1. SCOPE.

1.1 Scope. This method describes procedures for shipboard, fiber optic cable routing interior to and between the interconnection boxes. Method 7B1-1 covers the hermaphroditic receptacle installation into port/starboard or a midship/sail interconnection box. Method 7B1-2 covers interconnection box interior cable routing to a patch panel for ST connector termination on fiber optic cable. Method 7B1-3 covers interconnection box interior cable routing to the pin and socket termini used for NAVSEA DWG 7379171 hermaphroditic connectors on fiber optic cable.

2. REQUIRED EQUIPMENT AND MATERIALS.

2.1 The equipment and materials in the tables located in the applicable sections of this method shall be used to perform these procedures.

3. PROCEDURES.

3.1 Safety summary. The following safety precautions shall be observed:

a. Do not stare into the end of a fiber until verifying that the fiber is not connected to a laser light source or LED.

3.2. Procedure I. Method 7B-1 Interconnection box hermaphroditic receptacle installation.

3.2.1 The interconnection box and the equipment in table 7B1-I shall be used to perform this installation.

TABLE 7B1-I. Equipment and materials.

Description	Quantity
D hole punch (NAVSEA DWG 7325763-1H-6009AH or equal)	1
Interconnection box (NAVSEA DWG 7325762-1A-0346 or equal)	1
Dust cover, hermaphroditic connector, with interior threads (NAVSEA DWG 7325761-1A-6004AD or equal)	1
Connector, receptacle, hermaphroditic compatible (NAVSEA DWG 7325762-1A-6004AC-6000AC or equal)	1
ST-to-ST adapter, single mode, nickel plated brass or stainless steel housing (NAVSEA DWG 7325761-1A-6007AB or equal)	36
Wrench, 1-7/8 in, open end	1
Wrench, 2 in, open end	1

3.2.2 Interconnection box installation . This installation includes orientating and punching the D hole, then inserting the hermaphroditic receptacle.

Step 1 - Use D hole punch to place the correctly oriented “D hole(s)” in the top/bottom panel of the interconnection box.

NOTE: D hole punch in table 7B1-I is specified for use with interconnection boxes made from the following materials and thickness: made from mild steel with a thickness of 14 gauge (0.078 in) or less, softer metals

Source: https://assist.dla.mil -- Downloaded: 2016-12-10T08:13Z
Check the source to verify that this is the current version before use.

(aluminum or brass) with a thickness of 12 gauge (0.105 in) or less and plastics (including fiberglass and mildly fibrous materials) with a thickness of 0.135 in or less.

Step 2 - Install the interconnection box onto the mounting surface

a. Place one “D” hole in the interconnection box for installation “A” configuration in the orientation shown in figure 7B1-1.

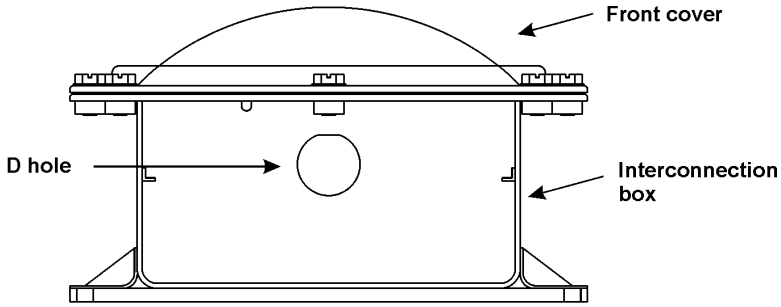

D hole orientation: flat faces front (the cover)

FIGURE 7B1-1. Installation A, C, D, E, G and H Kit D hole orientation.

b. Place two “D” holes in the interconnection box for installation “B” configuration in the orientation shown in figure 7B1-2.

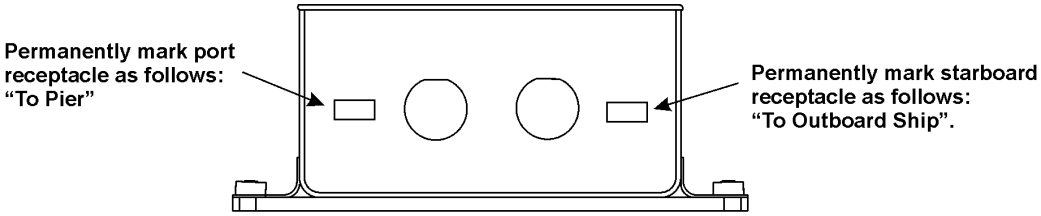

D hole orientation: flat faces front (the cover).

FIGURE 7B1-2. Installation “B” Kit D hole orientation and markings.

Step 3 - Remove the large nut on the hermaphroditic receptacle

Step 4 - Place the hermaphroditic receptacle inside the interconnection box and through the D hole.

Step 5 - Place ring from dust cover onto the hermaphroditic receptacle.

Step 6 - Place and tighten the nut onto the hermaphroditic receptacle.

NOTE: Use a 1-7/8 in wrench to tighten the nut. Use a 2 in wrench inside the interconnection box to hold the hermaphroditic connector while tightening the nut.

Step 7 - Mark interconnection boxes for the installation “B” Kit configuration as shown in figure 7B1-2.

Source: https://assist.dla.mil -- Downloaded: 2016-12-10T08:13Z
Check the source to verify that this is the current version before use.

3.3 Procedure II. Method 7B1-2 Interconnection box cable routing to a patch panel (see figure 7B1-3). Method 7B1-2 describes the entry of shipboard cable into the interconnection box, routing of the single fiber cables (OFCCs) around the interconnection box and termination of the single fiber cables at a patch panel, such as in the ship's radio room.

3.3.1 Equipment and materials. The equipment and materials in tables 2B1-I and 2C1-I shall be used to perform this procedure.

CAUTION: Throughout the termination process, cleanliness is critical to obtaining a high optical quality connection. Make sure that your hands and the work area are as clean as possible to minimize the ingress of dirt into the connector parts.

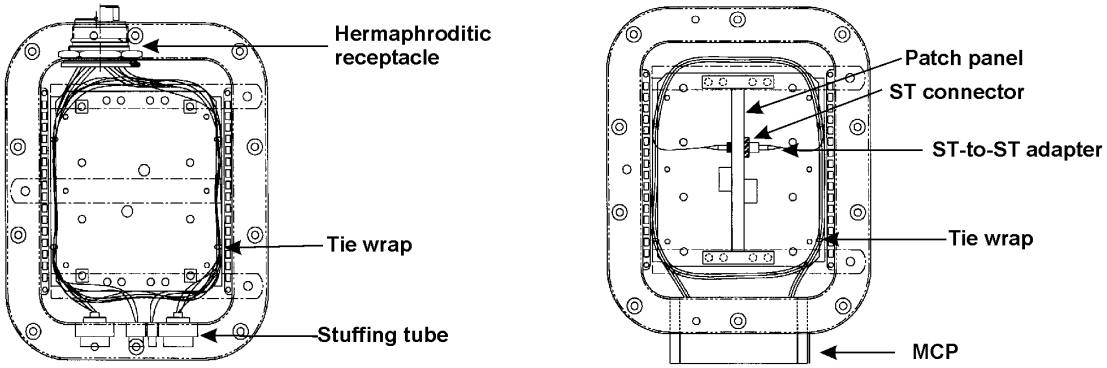

FIGURE 7B1-3. Single fiber cable routing inside interconnection box.

3.3.2 Cable preparation.

Step 1 - Install each cable into the interconnection box multiple cable penetrator (MCP) per Method 2B1 or stuffing tubes per Method 2A1.

Step 2 - Perform cable entry, OFCC routing, and OFCC termination to the patch panel in accordance with Method 2B1 and Method 2C1 of this standard.

NOTE: The cable outer jacket should have been stripped back 0.9 m (3 ft) and each OFCC terminated with an ST connector in accordance with Method 5B1 of this standard.

NOTE: Eight fiber, multimode cable is marked M85045/17-01P. Eight fiber, single mode cable is marked M85045/17-02P.

Step 3 - Route the 0.9 m (3 ft) of stripped back OFCCs around the interconnection box per Method 2C1 of this standard. All OFCCs should be routed around the interconnection box at least three quarters of a turn.

NOTE: Routing one-half of a turn around the interconnection box then to the termination point is the minimum acceptable routing distance.

Step 4 - Install the ST connector on the end of each OFCC into the patch panel per 3.2.2 of Method 2C1.

Source: https://assist.dla.mil -- Downloaded: 2016-12-10T08:13Z
Check the source to verify that this is the current version before use.

3.4 Procedure III. Method 7B1-3 Interconnection box cable routing to a hermaphroditic receptacle. Method 7B1-3 describes the routing of shipboard cable around the interconnection box for termination at a hermaphroditic receptacle without going through an intermediary patch panel inside the interconnection box.

TABLE 7B1-II. Equipment and materials.

Description	Quantity
Termini insertion tool, straight, M29504 (NAVSEA DWG 7325763 [item 6009 BF] or equal)	1
Termini removal tool, M29504 (NAVSEA DWG 7325763 [item 6009 BF] or equal)	1

3.4.1 Equipment and materials. The equipment and materials in tables 2B1-II, 2C1-I, and 7B1-2 shall be used to perform this procedure.

CAUTION: Throughout the termination process, cleanliness is critical to obtaining a high optical quality connection. Make sure that your hands and the work area are as clean as possible to minimize the ingress of dirt into the connector parts.

3.4.2 Cable preparation.

NOTE: The exposed portion of the single mode, single fiber cable at the end of a multiple fiber cable should be at least 18 in in length to enable single fiber cable to be mandrel wrapped for return loss measurements.

Step 1 - Ensure that the cable has been prepared and terminated properly per Method 7A1-1 of this standard.

NOTE: The cable outer jacket should have been stripped back 1.5 m (5 ft) and each OFCC terminated with a terminus.

NOTE: Eight fiber, multimode cable is marked M85045/17-01P. Eight fiber, single mode cable is marked M85045/17-02P.

Step 2 - Install each cable into the interconnection box multiple cable penetrator (MCP) per Method 2B1 of this standard or stuffing tubes per Method 2A1 of this standard.

Step 3 - Route the 1.5 m (5 ft) of stripped back OFCCs around the interconnection box per Method 2C1 of this standard. All OFCCs should be routed around the interconnection box at least one complete turn prior to termini insertion into the hermaphroditic receptacle or prior to tie back.

NOTE: Routing one-half of the way around the interconnection box then to the termination point is the minimum acceptable routing distance.

Step 4 - Install the termini on the end of the designated OFCCs into the hermaphroditic receptacle per Method 7A1-1 of this standard.

Step 5 - Place a dust cover on the ends of termini not installed into the hermaphroditic receptacle. Tie wrap these OFCCs around the sides of the interconnection box.

Source: https://assist.dla.mil -- Downloaded: 2016-12-10T08:13Z
Check the source to verify that this is the current version before use.

METHOD 7C1

UMBILICAL ASSEMBLY CABLE TIE-DOWN GUIDELINES AND PRACTICES

1. SCOPE.

1.1 Scope. This method provides guidelines and practices for deploying the umbilical assembly from the pier to the ship. Method 7C1-1 covers the securing of the umbilical assembly at the pier and on the ship using the umbilical assembly cable grips. Method 7C1-2 covers guidance for placing rat guards on the umbilical assembly.

2. REQUIRED EQUIPMENT AND MATERIALS.

2.1 The equipment and materials in the tables located in the applicable sections of this method shall be used to perform these procedures.

3. PROCEDURES.

3.1 Safety summary. The following safety precautions shall be observed:

a. Do not stare into the end of a fiber until verifying that the fiber is not connected to a laser light source or LED.

3.2 Procedure I. Method 7C1-1 Securing the umbilical assembly using cable grips. Method 7C1-1 describes procedures for tying down the umbilical assembly at the pier and on the ship using the umbilical assembly cable grips.

3.2.1 Equipment and materials. The equipment and materials in table 7C1-I shall be used to perform this procedure:

TABLE 7C1-I. Equipment and materials.

Description	Quantity
Support grip, single eye, split mesh, lace closing, stainless steel (NAVSEA DWG 7325761-1A-6007AA or equal)	2
Rope	As required
Electrical tie down strap (Tie wraps)	As required
Leather gloves	2 pair
Cloth rags	2
Diagonal cutters (or other cutters for tie wraps)	1

3.2.2 Procedure.

Step 1 - Locate the portions of umbilical assembly cable just off the ship and off the pier.

Step 2 - Move the closed mesh support grips on each end of the umbilical assembly to this location.

NOTE: Moving the closed mesh support grips, is done by holding one end fixed while increasing the opening of the other end. Compressing both ends like a Chinese finger is less effective.

NOTE: A split mesh, lace closing, support grip can be placed at the desired location in lieu of moving the closed mesh support grip.

Source: https://assist.dla.mil -- Downloaded: 2016-12-10T08:13Z
Check the source to verify that this is the current version before use.

NOTE: A split mesh, rod closing, support grip is not authorized for this application. The rigidity of the rod can induce stress concentrations leading to fiber breakage while cable is in use or coiled on the cable reel.

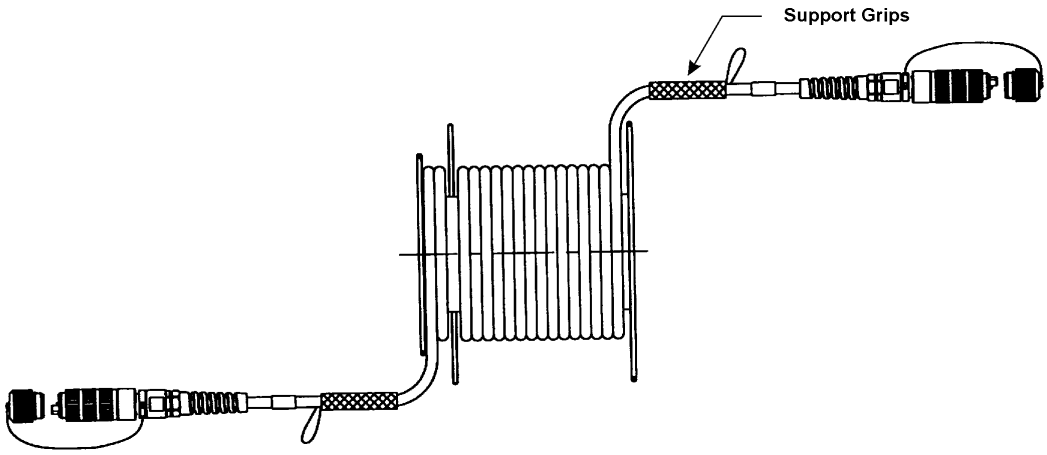

FIGURE 7C1-1. Support grips on umbilical assembly.

Step 3 - Attach a rope to the single eye on the support grip.

Step 4 - Attach the other end of the rope to a mooring clamp on the pier/ship.

NOTE: Place a drip loop in the cable between the pier and ship. The drip loop is to contain sufficient slack or cable bend to compensate for ship position at high and low tides.

Step 5 - Use electrical tie down straps or other means to secure the umbilical assembly cable when it is routed close to detrimental obstacles (such as near steam lines, at sharp protrusions, on gang planks, near foot/vehicle traffic).

Source: https://assist.dla.mil -- Downloaded: 2016-12-10T08:13Z
Check the source to verify that this is the current version before use.

3.3 Procedure II. Method 7C1-2 Installing rat guards. Method 7C1-2 describes procedures for installing rat guards on the umbilical assembly.

3.3.1 Equipment and materials. The equipment and materials in table 7C1-II shall be used to perform this procedure:

TABLE 7C1-II. Equipment and materials.

Description	Quantity
Rat guard	1
Rubber sheet	As required
Waxed cord (MIL-T-43435 Type I or commercial)	As required

3.3.2 Procedure.

NOTE: A rat guard is a funnel shaped device that is placed on the cable to prevent rodent entry onto a ship via the pierside umbilical assembly. The rat guard is usually a two piece construction fabricated by the shipyard/shore activity. The two halves are held together in service by waxed cord or other suitable means. Each shore site determines the requirement/need for a rat guard.

Step 1 - Obtain a rat guard suitable for the umbilical assembly cable diameter.

NOTE: The outside diameter of the umbilical assembly cable may range from a maximum of 16.20 mm (0.639 in) to a minimum of 14.00 mm (0.551 in).

Step 2 - Wrap the rubber sheet around the cable between the two halves of the rat guard.

NOTE: The rubber material is used to distribute the load on the cable from the rat guard.

Step 3 - Using the waxed cord, lash the two halves of the rat guard to the cable.

Source: https://assist.dla.mil -- Downloaded: 2016-12-10T08:13Z
Check the source to verify that this is the current version before use.

METHOD 7D1

UMBILICAL ASSEMBLY CABLE SPOOLING OPERATIONS

1. SCOPE.

1.1 Scope. This method describes a procedure for umbilical assembly spooling operations to place and remove the umbilical assembly from the pier to the ship. This method uses a hand cranked spooling device that conforms to NAVSEA DWG 7379173. Method 7D1-1 covers spooling operations to remove a partial length of cable from the cable reel. Method 7D1-2 covers spooling operations to place a partial length of cable back onto the cable reel. Method 7D1-3 covers spooling operations for initial placement of the umbilical assembly onto a three flanged, cable reel.

2. REQUIRED EQUIPMENT AND MATERIALS.

2.1 The equipment and materials in the tables located in the applicable sections of this method shall be used to perform these procedures.

3. PROCEDURES.

3.1 Safety summary. The following safety precautions shall be observed:

a. Do not stare into the end of an umbilical assembly until verifying that the umbilical assembly is not connected (attached to a laser light source or LED).

3.2 Procedure I. Method 7D1-1 Unspooling operation. Method 7D1-1 describes procedures for removing a length of umbilical assembly cable from the cable reel.

3.2.1 Equipment and materials. The equipment and materials in table 7D1-I shall be used to perform this procedure:

TABLE 7D1-I. Equipment and materials.

Description	Quantity
Electrical tie down strap (Tie wraps)	As required
Leather gloves	2 pair
Cloth rags	2
Diagonal cutters (or other cutters for tie wraps)	1
Tek wipes	As required
Alcohol bottle with alcohol/2-propanol or equal (sealable type)	1
Canned air or compressed air	As required

3.2.2 Procedure.

3.2.2.1 Place umbilical assembly onto spooling device.

Step 1 - Release the fastening devices securing the split bushing on the spooling device (see figure 7D1-1).

Source: https://assist.dla.mil -- Downloaded: 2016-12-10T08:13Z
Check the source to verify that this is the current version before use.

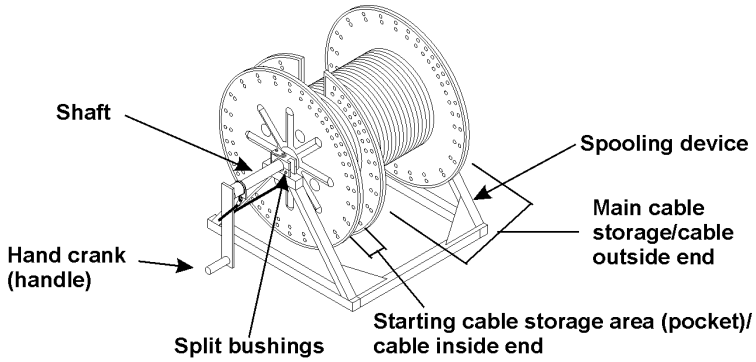

FIGURE 7D1-1. Hand cranked spooling device.

Step 2 - Remove the shaft from the spooling device.

Step 3 - Place the umbilical assembly cable reel onto the square portion of the spooling device shaft and secure it into place with locking pins.

Step 4 - Place the shaft with the affixed cable reel into the split bushings on the spooling device.

Step 5 - Secure the fastening devices on the split bushings.

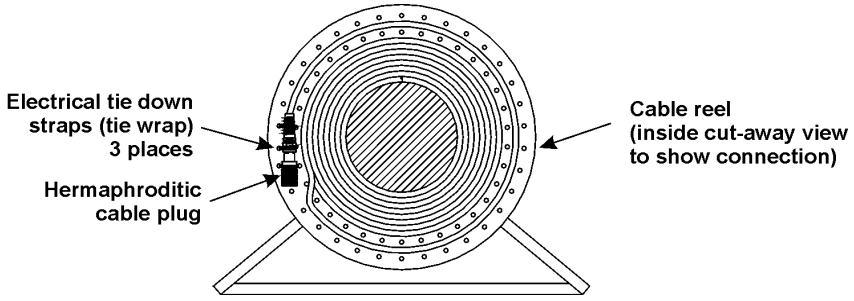

FIGURE 7D1-2. Electrical tie down straps on umbilical assembly.

3.2.2.2 Unspool outside end of cable from cable reel (see figure 7D1-2).

NOTE: Use at least two personnel to perform this spooling operation. One person shall operate the spooling device to unspool the cable from the umbilical assembly cable reel, guiding the cable from the cable reel. The other person shall remove the needed cable length from the cable reel, ensuring sharp bends are not placed in the cable and that the cable exiting the connector does not whip, bend sharply or snag.

Step 1 - Plan the routing of the outside end of the cable.

NOTE: Use the following routing guidelines:

a. Do not route near steam lines, other hot objects, sharp penetrations, or vehicle/foot traffic.

b. Do not place the cable in a bend with a diameter smaller than 33 cm (13 in) around corners or other object shapes.

Source: https://assist.dla.mil -- Downloaded: 2016-12-10T08:13Z
Check the source to verify that this is the current version before use.

c. Station the umbilical assembly cable reel within 6.1 m (20 ft) of a mating hermaphroditic receptacle.

d. Make sure that the planned cable reel location will be acceptable for the duration of the connection to the pier and the ship. The umbilical assembly location should not affect the ship's routine of taking on stores, fuel, ammunition, etc.

e. Route the umbilical assembly cable in the utility trench, up the side of the gang plank and in other locations where the umbilical assembly cable will not be subjected to damage. Select a route in which both degrees of bends and cable length is minimized.

Step 2 - Cut off the electrical tie down straps that secure the connector on the outside end of the cable to either flange (outside or center) of the main cable storage area (see figure 7D1-2).

Step 3 - Put on tight fitting gloves.

Step 4 - Disengage the locking mechanism on the spooling device shaft to allow cable reel rotation.

Step 5 - CAUTION: Backlash can occur in the cable coming off of the cable reel if the cable is unwound at an uneven rate. Backlash typically will occur if the cable is unwound at widely varying rates. Constant tension on the cable, as it is coming off the cable reel, should minimize any backlash. Constant tension is applied by keeping your hand on top on the cable.

Slowly unwind the umbilical assembly cable from the cable reel while walking the planned cable route. During this time a second person should guide the cable from the cable reel.

NOTE: Do not unwind umbilical assembly cable from back of a truck. Higher unspooling speeds (greater then 10 mph) and backlashes will cause fiber breakage.

NOTE: Walk slowly while unwinding the cable to minimize pulling stresses on the optical fiber.

Step 6 - Engage the locking mechanism on the spooling device shaft to prevent cable reel rotation once the required cable length is removed from the cable reel.

Step 7 - Verify that the umbilical assembly cable is free of tangles, obstructions, and obstacles that will interfere with the spooling operation and other hazards listed in step 1.

3.2.2.3 Hand unwind cable inside end from cable reel.

Step 1 - Plan the routing of the inside end of the cable.

NOTE: Use the following routing guidelines:

a. Do not route near steam lines, other hot objects, sharp penetrations, or vehicle/foot traffic.

b. Do not place the cable in a bend with a diameter smaller than 33 cm (13 in) around corners or other object shapes.

c. Make sure that the planned cable reel location will be acceptable for the duration of the connection to the pier and the ship.

d. Route the umbilical assembly cable so that it will not be subjected to damage.

Source: https://assist.dla.mil -- Downloaded: 2016-12-10T08:13Z
Check the source to verify that this is the current version before use.

e. Select a route in which both degrees of bends and cable length is minimized.

Step 2 - Cut off the electrical tie down straps that secure the connector on the inside end of the cable to outside flange of the cable reel pocket.

Step 3 - Hand unwind the short length of cable (i.e., the 6.1 m (20 ft) length) from the pocket on the cable reel.

NOTE: This end of the cable is called the inside end.

Step 4 - Verify that the umbilical assembly cable is free of tangles, obstructions, obstacles that will interfere with the spooling operation and other hazards listed in step 1.

3.2.2.4 Connect umbilical assembly connectors to pier and ship (see figure 7D1-3).

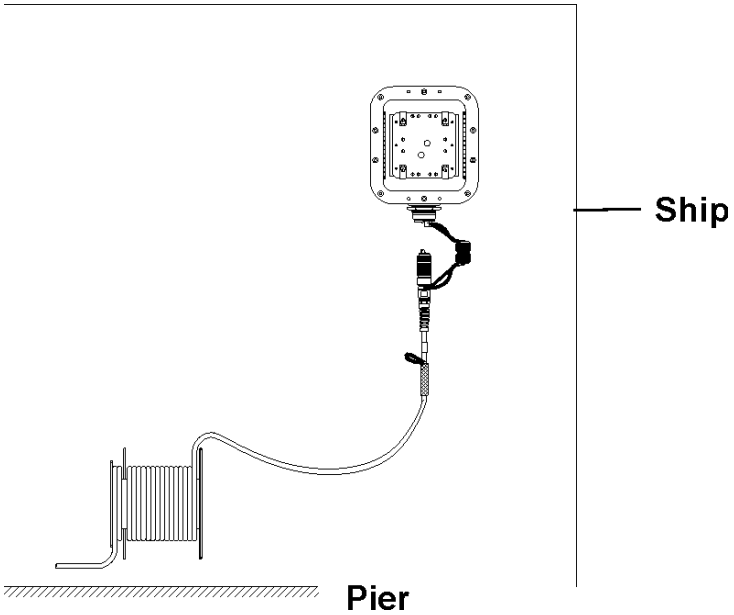

FIGURE 7D1-3. Mating hermaphroditic connectors and dust covers.

Step 1 - CAUTION: Throughout the termination process, cleanliness is critical to obtaining a high optical quality connection. Make sure that your hands and the work area are as clean as possible to minimize the ingress of dirt or dust into the connector parts.

Clean any dirt off the surfaces of the connectors and dust covers as specified in Method 7E1-1.

Step 2 - Unscrew the hermaphroditic cable plug dust cover from hermaphroditic cable plug on the umbilical assembly. Likewise, unscrew the hermaphroditic receptacle dust cover from the hermaphroditic receptacle on the interconnection box.

Step 3 - Visually inspect the inside of the connector and the termini for dirt or dust, then perform on the the following actions:

Source: https://assist.dla.mil -- Downloaded: 2016-12-10T08:13Z
Check the source to verify that this is the current version before use.

a. Proceed with step 4 if the interior of the connector appears to be clean.

b. Clean the termini in the hermaphroditic cable plug and the hermaphroditic receptacle as specified in 7E1-2 if dirt or dust appears in the interior of the connector.

Step 4 - Position and mate the hermaphroditic cable plug with the hermaphroditic receptacle as specified in Methods 7H1-1 and 7H1-3.

NOTE: Screw the dust cover on the hermaphroditic receptacle to the dust cover on the hermaphroditic cable plug.

Step 5 - Repeat steps 1 through 4 for the connection at the other end of the umbilical assembly.

NOTE: See Method 7C1-1 for securing the umbilical assembly using cable grips at the two points where the cable exits the ship and the pier.

NOTE: See Method 7C1-2 for placing a rat guard on the umbilical assembly, if required.

3.3 Procedure II. Method 7D1-2 Spooling operation. Method 7D1-2 describes procedures for placing a length of umbilical assembly cable back onto the cable reel.

3.3.1 Equipment and materials. The equipment and materials in table 7D1-II shall be used to perform this procedure:

TABLE 7D1-II. Equipment and materials.

Description	Quantity
Electrical tie down strap (Tie wraps)	As required
Leather gloves	2 pair
Cloth rags	2
Diagonal cutters (or other cutters for tie wraps)	1
Tek wipes	As required
Alcohol bottle with alcohol/2-propanol or equal (sealable type)	1
Canned air or compressed air	As required

3.3.2 Procedure.

3.3.2.1 Disconnect umbilical assembly connectors from pier and ship.

Step 1 - Clean any dirt off the surfaces of the mated connectors and the mated dust covers as specified in Method 7E1-3.

Step 2 - Unscrew the hermaphroditic cable plug dust cover from the hermaphroditic receptacle dust cover (on the interconnection box) as specified in Method 7H1-4.

Step 3 - Screw the dust covers onto the hermaphroditic receptacle at the interconnection box and the hermaphroditic cable plug on the umbilical assembly.

Source: https://assist.dla.mil -- Downloaded: 2016-12-10T08:13Z
Check the source to verify that this is the current version before use.

Step 4 - Repeat steps 1 through 3 for the connection at the other end of the umbilical assembly.

3.3.2.2 Remove restraining/securing devices.

Step 1 - Untie/unfasten the closed mesh support grips from mooring clamps or other constraints holding the cable at points exiting the pier and the ship.

Step 2 - Remove electrical tie down straps and other constraints holding the umbilical assembly cable in place at other points in the cable run.

Step 3 - When feasible, carefully carry the hermaphroditic connector and umbilical cable to a safe place on the pier.

NOTE: Do not place the umbilical assembly cable in a traffic area.

Step 4 - Remove the rat guard, if applicable.

a. Carefully remove the waxed cord the holds the two halves of the rat guard together.

b. Unwrap the rubber sheet from around the cable.

3.3.2.3 Place umbilical assembly onto spooling device.

Note: Proceed to 3.3.2.4 if the umbilical assembly is already on the spooling device.

Step 1 - Release the fastening devices securing the split bushing on the spooling device (see figure 7D1-1).

Step 2 - Remove the shaft from the spooling device.

Step 3 - Place the umbilical assembly cable reel onto the square portion of the spooling device shaft and secure it into place with locking pins.

Step 4 - Place the shaft with the affixed cable reel into the split bushings on the spooling device.

Step 5 - Secure the fastening devices on the split bushings.

3.3.2.4 Hand wind cable inside end onto cable reel.

Step 1 - Hand wind the short length of cable (i.e., the 6.1 m (20 ft) length) into the pocket on the cable reel.

NOTE: This end of the cable is called the inside end.

Step 2 - Secure the connector on the inside end of the cable to the outside flange of the pocket (see figure 7D1-2).

NOTE: Secure the connector in at least 3 places on the flange. Place one electrical tie down strap at the dust cover in a manner to ensure that connector does not rub against the ground (surface) during transport or during the remainder of the spooling operation.

NOTE: Bungie cord, rope or other means may be used in lieu of electrical tie down straps.

3.3.2.5 Spool outside end of cable onto cable reel.

NOTE: Use at least two personnel to perform this spooling operation. One person shall turn the hand crank, the other shall guide the cable onto the cable reel.

Source: https://assist.dla.mil -- Downloaded: 2016-12-10T08:13Z
Check the source to verify that this is the current version before use.

NOTE: Preference is to have at least three personnel to perform this function. The third person shall assist in guiding the umbilical assembly cable, ensuring that the umbilical assembly cable does not kink around turns and that there are no snags, whipping or sharp bends at the hermaphroditic cable plug.

Step 1 - Place the hand crank onto the spooling device shaft and secure it with a locking pin.

Step 2 - Verify that the umbilical assembly cable is free of tangles, obstructions or other obstacles that will interfere with the spooling operation.

NOTE: The umbilical assembly cable may be placed in 30.5 m (100 ft) to 61 m (200 ft) loops (a multiple “S” shape pattern) to ease the spooling operation if a sufficient lay down area is available. A third person, if available, can guide the cable at the end of each loop while observing for end whipping, sharp bends or snagging at the hermaphroditic cable plug.

Step 3 - Put on tight fitting gloves while winding the outside end of the cable onto the cable reel.

NOTE: The person guiding the cable onto the cable reel must have tight fitting gloves. Loose fitting gloves can get caught between cable wraps while winding the cable.

Step 4 - CAUTION: While guiding the cable onto the cable reel, keep your hand on top of the cable. If your hand is positioned slightly to the side of the cable, your hand can get caught between cable wraps.

CAUTION: Turn the hand crank slowly to prevent injury (if the hand of the person guiding the cable does get caught between cable wraps).

Turn the hand crank to wind the cable onto the cable reel. A second person should guide the cable onto the cable reel.

NOTE: Turn the hand crank slowly to minimize pulling stresses on the optical fiber.

NOTE: The person guiding the cable should have a rag in the hand that is not on top of cable. Wipe dirt off of the cable using the rag as the cable is wound onto the cable reel.

NOTE: The person guiding the cable should stand on the spooling device frame until enough weight (first few 100 feet of cable) is on the cable reel. This will prevent spooling device movement during the winding operation.

Step 5 - Secure the connector on the outside end of the cable to either flange (outside or center) of the main cable storage area.

NOTE: Secure the connector in at least 3 places on the flange. Place one electrical tie down strap at the dust cover in a manner to ensure that connector does not rub against the ground (surface) during transport.

NOTE: Bungee cord, rope or other means may be used in lieu of electrical tie down straps.

Step 6 - Engage the locking mechanism on the spooling device shaft to prevent cable reel rotation.

Step 7 - Remove the hand crank from the spooling device shaft and place it in the storage position on the spooling device.

Source: https://assist.dla.mil -- Downloaded: 2016-12-10T08:13Z
Check the source to verify that this is the current version before use.

3.4 Procedure III. Method 7D1-3 Initial spooling operation. Method 7D1-3 describes procedures for initial placement of an umbilical assembly cable on its cable reel using the spooling device.

3.4.1 Equipment and materials. The equipment and materials in table 7D1-III shall be used to perform this procedure:

TABLE 7D1-III. Equipment and materials.

Description	Quantity
Tie wraps	As required
Leather gloves	2 pair
Cloth rags	2
Diagonal cutters (or other cutters for tie wraps)	1
Tek wipes	As required
Alcohol bottle with alcohol/2-propanol or equal (sealable type)	1
Canned air or compressed air	As required
Tape measure	1

3.4.2 Procedure.

3.4.2.1 Place cable reel onto spooling device.

Step 1 - Release the fastening devices securing the split bushing on the spooling device (see figure 7D1-1).

Step 2 - Remove the shaft from the spooling device.

Step 3 - Place the cable reel onto the square portion of the spooling device shaft and secure it into place with the locking pins.

Step 4 - Place the shaft with the affixed cable reel into the split bushings on the spooling device.

Step 5 - Secure the fastening devices on the split bushings.

3.4.2.2 Hand wind cable inside end onto cable reel.

Step 1 - Measure (20 ft) from one end of the cable using a tape measure.

Step 2 - Place the cable on the cable reel at the 6.1 m (20 ft) mark.

NOTE: Position the cable reel such that cable at the 6.1 m (20 ft) mark is lying against the center flange, in the main cable storage area at the opening between the main cable storage area and the starting cable storage area (pocket).

Step 3 - Secure the cable at the 6.1 m (20 ft) mark to the center flange in the main cable storage area using electrical tie down straps (see figure 7D1-2).

Source: https://assist.dla.mil -- Downloaded: 2016-12-10T08:13Z
Check the source to verify that this is the current version before use.

NOTE: This tie down provision is incorporated into the cable reel to affix the cable so that the inside end of the cable is not removed from the reel during the outside end unwinding operation.

NOTE: Bungee cord, rope or other means may be used in lieu of electrical tie down straps.

Step 4 - Hand wind the 6.1 m (20 ft) of the cable into the pocket on the cable reel.

NOTE: This end of the cable is called the inside end.

Step 5 - Secure the connector on the inside end of the cable to the outside flange of the pocket.

NOTE: Secure the connector in at least 3 places on the flange. Place one electrical tie down strap at the dust cover in a manner to ensure that connector does not rub against the ground (surface) during transport or during the remainder of spooling operation.

3.4.2.3 Spool outside end of cable onto cable reel.

NOTE: Use at least two personnel to perform this spooling operation. One person shall turn the hand crank, the other shall guide the cable onto the cable reel.

Step 1 - Place the hank crank onto the spooling device shaft and secure it with a locking pin.

Step 2 - Verify that the umbilical assembly cable is free of tangles, obstructions or other obstacles that will interfere with the spooling operation.

NOTE: The umbilical assembly cable may be placed in 30.5 m (100 ft) to 61 m (200 ft) loops (a multiple “S” shape pattern) to ease the spooling operation if a sufficient lay down area is available. A third person, if available, can guide the cable at the end of each loop.

Step 3 - Put on tight fitting gloves while winding the outside end of the cable onto the cable reel.

NOTE: The person guiding the cable onto the cable reel must have tight fitting gloves. Loose fitting gloves can get caught between cable wraps while winding the cable.

Step 4 - CAUTION: While guiding the cable onto the cable reel, keep your hand on top of the cable. If your hand is positioned slightly to the side of the cable, your hand can get caught between cable wraps.

CAUTION: Turn the hand crank slowly to prevent injury (if the hand of person guiding the cable does get caught between cable wraps) .

Turn the hand crank to wind the cable onto the cable reel. A second person should guide the cable onto the cable reel.

NOTE: Turn the hand crank slowly to minimize pulling stresses on the optical fiber.

NOTE: The person guiding the cable should have a rag in the hand that is not on top of cable. Wipe dirt off of the cable using the rag prior to cable being wound on the cable reel.

NOTE: The person guiding the cable should stand on the spooling device frame until enough weight (first few 100 feet of cable) is on the cable

Source: https://assist.dla.mil -- Downloaded: 2016-12-10T08:13Z
Check the source to verify that this is the current version before use.

reel. This will prevent spooling device movement during the winding operation.

Step 5 - Secure the connector on the outside end of the cable to either flange (outside or center) of the main cable storage area.

NOTE: Secure the connector in at least 3 places on the flange. Place one electrical tie down strap at the dust cover in a manner to ensure that connector does not rub against the ground (surface) during transport.

NOTE: Bungie cord, rope or other means may be used in lieu of electrical tie down straps.

Step 6 - Engage the locking mechanism on the spooling device shaft to prevent cable reel rotation.

Step 7 - Remove the hand crank from the spooling device shaft and place it in the storage position on the spooling device.

Source: https://assist.dla.mil -- Downloaded: 2016-12-10T08:13Z
Check the source to verify that this is the current version before use.

METHOD 7E1

CLEANING THE HERMAPHRODITIC CONNECTOR FOR MATING OPERATIONS

1. SCOPE.

1.1 Scope. This method describes procedures for cleaning the outside surfaces of a hermaphroditic connector that conforms to NAVSEA DWG 7379171 prior to mating, cleaning the pin and socket termini that conform to NAVSEA DWG 7379172 and that are placed in this type of hermaphroditic connector and cleaning of connector dust covers that conform to NAVSEA DWG 7379171. Method 7E1-1 covers the connector cleaning without termini cleaning. Method 7E1-2 covers the connector cleaning with termini cleaning. Method 7E1-3 covers connector outer surface and dust cover cleaning for de-mating connector operations.

2. REQUIRED EQUIPMENT AND MATERIALS.

2.1 The equipment and materials in the tables located in the applicable sections of this method shall be used to perform these procedures.

3. PROCEDURES.

3.1 This section describes cleaning procedures for both hermaphroditic cable plugs and hermaphroditic receptacles. The cleaning procedures are an integral part of the connector mating and de-mating operations; therefore, references to the applicable mating procedures are included with these operations.

CAUTION: Throughout the termination process, cleanliness is critical to obtaining a high optical quality connection. Make sure that your hands and the work area are as clean as possible to minimize the ingress of dirt into the connector parts.

NOTE: Termini are to be cleaned only when required. Cleaning prior to each mating is not required. Cleaning the termini is required only when:

a. The hermaphroditic cable plug or hermaphroditic receptacle dust cover is not mated and the termini end faces are exposed.

b. The optical signal shows excessive degradation.

c. Dirt is found in the interior of the dust cover.

3.2 Safety summary. The following safety precautions shall be observed:

a. Do not stare into the end of an umbilical assembly until verifying that the umbilical assembly is not connected (attached to a laser light source or LED).

3.3 Procedure I. Method 7E1-1 Standard connector cleaning.

NOTE: This procedure is the standard procedure for cleaning hermaphroditic connectors during connector positioning and mating operations as specified in Methods 7H1-1 and 7H1-3.

3.3.1 Equipment and materials. The equipment and materials in table 7E1-I shall be used to perform this procedure:

Source: https://assist.dla.mil -- Downloaded: 2016-12-10T08:13Z
Check the source to verify that this is the current version before use.

TABLE 7E1-I. Equipment and materials.

Description	Quantity
Cloth rags	As required
Canned air (NAVSEA DWG 7325763-1G-35 or equal)	As required

Step 1 - Clean the outside surfaces of the hermaphroditic connector and the hermaphroditic dust cover with cloth rags.

Step 2 - Remove the dust cover from the hermaphroditic connector.

Step 3 - Blow air across the termini end face.

NOTE: Hold the tube/nozzle on the canned air about a foot from the termini and blow the air across the connector end face. The canned air contains a propellant. Blowing air directly on the connector end face will deposit propellant residue on the termini.

3.4 Procedure II. Method 7E1-2 Connector cleaning with terminus cleaning.

NOTE: This cleaning procedure is used during hermaphroditic connectors mating operations, as specified in Method 7H1-3, only if one or more of the conditions in the note under 3.1 of this Method applies.

3.4.1 Equipment and materials. The equipment and materials in table 7E1-II shall be used to perform this procedure:

TABLE 7E1-II. Equipment and materials.

Description	Quantity
Cloth rags	As required
Lint free swabs (NAVSEA DWG 7325763-1G-45 or equal)	As required
Wipes, cleaning cloth, white (NAVSEA DWG 7325763-1G-34 or equal)	As required
Alcohol bottle with alcohol/2-propanol or equal (sealable type)	1
Canned air (NAVSEA DWG 7325763-1G-35 or equal)	As required
Allen wrench, 5/64 in (NAVSEA DWG 7325763-1G-42 or equal)	1

Step 1 - Clean the outside surfaces of the hermaphroditic connector and the hermaphroditic dust cover with cloth rags.

Step 2 - Remove the dust cover from the hermaphroditic connector.

Step 3 - Remove the detachable socket insert from the connector using a 5/64 inch Allen wrench.

Step 4 - Dampen the end of a lint free swab (extra small size) with alcohol.

NOTE: Ensure that a 99 percent pure isopropyl alcohol is used. This alcohol purity may be labeled as USP grade 99 % pure, ASC grade or technical grade. Using an alcohol of lesser purity will leave a residue and complicate further cleaning efforts.

Source: https://assist.dla.mil -- Downloaded: 2016-12-10T08:13Z
Check the source to verify that this is the current version before use.

Step 5 - Rotate the lint free swab back and forth across each terminus end face with slight pressure on the terminus end face.

NOTE: Perform step 6 immediately after this step to minimize a contaminated, air dried, alcohol film residue from forming.

Step 6 - Wipe back and forth across each terminus end face using slight finger pressure with a dry, lint-free, cleaning cloth (cloth wipe) or lint free swab.

NOTE: Ensure the wipe used is the type specified. Other types of wipes or tissues will deposit lint on the terminus end face or may scratch the glass at the terminus end face.

NOTE: Wipe the end face of each terminus individually. Do not put an already wiped area of the material onto adjacent termini, especially already wiped termini.

NOTE: Wipe each terminus using a different area on the cloth wipe. Wiping two termini with the same area on the cloth wipe can leave dirt, from the first terminus on the second terminus.

Step 7 - Blow air across the termini end face.

NOTE: Hold the tube/nozzle on the canned air about a foot from the termini and blow the air across the connector end face. The canned air contains a propellant. Blowing air directly on the connector end face will deposit propellant residue on the termini.

Step 8 - Dampen the end of a lint free swab (extra small size) with alcohol.

NOTE: Ensure that a 99 percent pure isopropyl alcohol is used. This alcohol purity may be labeled as USP grade 99 % pure, ASC grade or technical grade. Using an alcohol of lesser purity will leave a residue and complicate further cleaning efforts.

Step 9 - Run the wetted, lint free swab through one alignment sleeve one time.

Step 10 - Run a dry, lint free swab through one alignment sleeve one time.

Step 11 - Repeat steps 9 and 10 for each alignment sleeve.

Step 12 - Blow air into each alignment sleeve on the detachable socket insert.

Step 13 - Replace the detachable socket insert onto the connector using a 5/64 inch Allen wrench.

Source: https://assist.dla.mil -- Downloaded: 2016-12-10T08:13Z
Check the source to verify that this is the current version before use.

3.4 Procedure III. Method 7E1-3 Connector de-mating and dust cover cleaning.

NOTE: This cleaning procedure is used during hermaphroditic connector de-mating operations as specified in Method 7H1-4.

3.4.1 Equipment and materials. The equipment and materials in table 7E1-III shall be used to perform this procedure:

TABLE 7E1-III. Equipment and materials.

Description	Quantity
Cloth rags	As required
Wipes, cleaning cloth, white (NAVSEA DWG 7325763-1G-34 or equal)	As required
Alcohol bottle with alcohol/2-propanol or equal (sealable type)	1
Canned air (NAVSEA DWG 7325763-1G-35 or equal)	As required

Step 1 - Clean the outside surfaces of the hermaphroditic connector and the hermaphroditic dust cover with cloth rags.

Step 2 - De-mate the two dust covers.

Step 3 - Dampen the cloth wipe with alcohol.

Step 4 - Clean each surface of the dust cover interior.

Step 5 - Using a dry, cloth wipe, dry each surface of the dust cover interior.

Step 6 - Blow air into the dust cover interior.

Source: https://assist.dla.mil -- Downloaded: 2016-12-10T08:13Z
Check the source to verify that this is the current version before use.

METHOD 7F1

OPTICAL LOSS TESTING OF PIERSIDE CONNECTIVITY CABLE COMPONENTS

1. SCOPE.

1.1 Scope. This method describes tailoring to procedures in Method 6C1 and Method 6E1 suited to the pierside connectivity cabling configurations. Supplement 7F1-1 is an addendum for the cable assembly loss test performed on umbilical assemblies, pigtail assemblies, and for terminated shipboard cables. Supplement 7F1-2 is an addendum for the end-to-end attenuation test specific to pierside configuration, i.e., from the pigtail assembly at the pier to the outboard most interconnection box on the ship.

2. ADDENDUM TO PROCEDURES.

2.1 Addendum I. Supplement 7F1-1 to Method 6C1-1 Cable assembly loss test. Supplement 7F1-1 describes tailoring for optical loss testing of umbilical assemblies, pigtail assemblies, and terminated shipboard cables (designated only for the pierside application) to Method 6C1-1.

2.2.1 Equipment and materials. The equipment and materials in table 7F1-I shall be used to perform the procedure in Method 6C1-1:

TABLE 7F1-I. Equipment and materials.

Description	Quantity
LED source (NSN 7Z 6625 01 304 1739 or NAVSEA DWG 7325763-1B [item 6009BA] or equal)	1
Laser (LD) source (NAVSEA DWG 7325763-1B [item 6009BB] or equal)	1
Power meter (NSN 7Z 6625 01 304 1739 or NAVSEA DWG 7325763-1B [item 6009BA] or equal)	1
MQJ, ST-to-ST connector, 1 meter length, multimode (NAVSEA DWG 7325763-1D [item 6009AX] or equal)	2
MQJ, ST-to-ST connector, 1 meter length, single mode (NAVSEA DWG 7325763-1D [item 6009AY] or equal)	2
ST-to-ST adapter, single mode, split ceramic alignment sleeve, metal housing (NAVSEA DWG 7325763-1D [item 6007AB] or equal)	2
MQJ, hermaphroditic cable plug to ST connector, 1 meter length (NAVSEA DWG 7325763-1E [item 6009AQ] or equal)	2
MQJ, Socket termini-to-ST connector, 1 meter length, single mode (NAVSEA DWG 7325763-1F [item 6009AJ] or equal)	2
MQJ, Pin termini-to-ST connector, 1 meter length, single mode (NAVSEA DWG 7325763-1F [item 6009AK] or equal)	2
MQJ, Socket termini-to-ST connector, 1 meter length, multimode (NAVSEA DWG 7325763-1F [item 6009AL] or equal)	2
MQJ, Pin termini-to-ST connector, 1 meter length, multimode (NAVSEA DWG 7325763-1F [item 6009AM] or equal)	2
Snap lock, plug, termini-to-termini connection device (NAVSEA DWG 7325763-1F [item 6009AP] or equal)	2

Source: https://assist.dla.mil -- Downloaded: 2016-12-10T08:13Z
Check the source to verify that this is the current version before use.

TABLE 7F1-I. Equipment and materials - continued.

Description	Quantity
Snap lock, receptacle, termini-to-termini connection device (NAVSEA DWG 7325763-1F [item 6009AR] or equal)	2
Termini insertion tool, straight, M29504 (NAVSEA DWG 7325763 ([item 6009BF] or equal)	1
Termini removal tool, M29504 (NAVSEA DWG 7325763 [item 6009BF] or equal	1
Alignment sleeve insertion and removal tool, M29504 (NAVSEA DWG 7325763 [item 6009BH] or equal	1
Wipes (NAVSEA DWG 6872811-18 or equal)	As required
Alcohol bottle with alcohol/2-propanol or equal (sealable type)	1
Canned air or compressed air	As required

2.2.2 Supplement to cable assembly loss test. Perform the cable assembly loss test with the supplemental information as follows:

Item 1 - Reference measurement setup. Connect the ST-to-ST MQJ between the optical source and the power meter in accordance with Method 6C1 and figures 7F1-1 through 7F1-6.

Item 2 - Test measurement setup. Connect the cable assembly under test to the optical source and power meter in accordance with Method 6C1, table 7F1-II, and the applicable figure (see figures 7F1-1 through 7F1-6).

NOTE: For cables with single terminus, Straight Tip (ST) connectors on one or both ends, the ST-to-ST MQJ used to obtain the reference measurement should be used as MQJ 1.

NOTE: If the cable assembly contains termini that are not installed in a hermaphroditic connector, use the snap lock plug and receptacle to mate the MQJ terminus to the cable assembly terminus. The insertion and removal tools are needed to insert/remove the termini from the snap lock plug and receptacle.

Source: https://assist.dla.mil -- Downloaded: 2016-12-10T08:13Z
Check the source to verify that this is the current version before use.

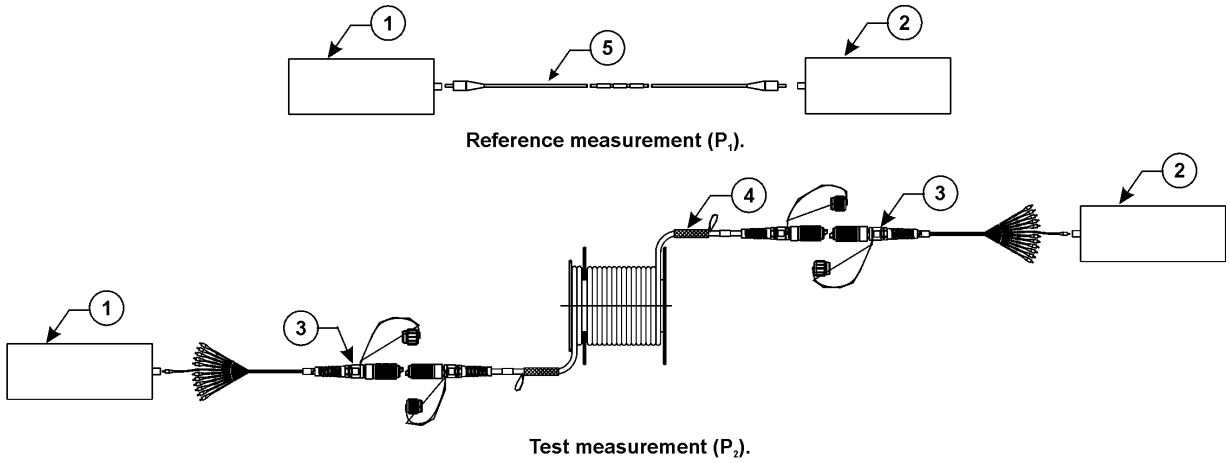

1 Light Source (MM - Use LED source, SM - Use LD Source

2 Power Meter

3 Hermaphroditic MQJ

4 Cable Assembly Under Test

5 ST-to-ST MQJ (MM - use MM MQJ; SM - use SM MQJ)

FIGURE 7F1-1. Cable assembly measurement: cable plug-to-cable plug configuration.

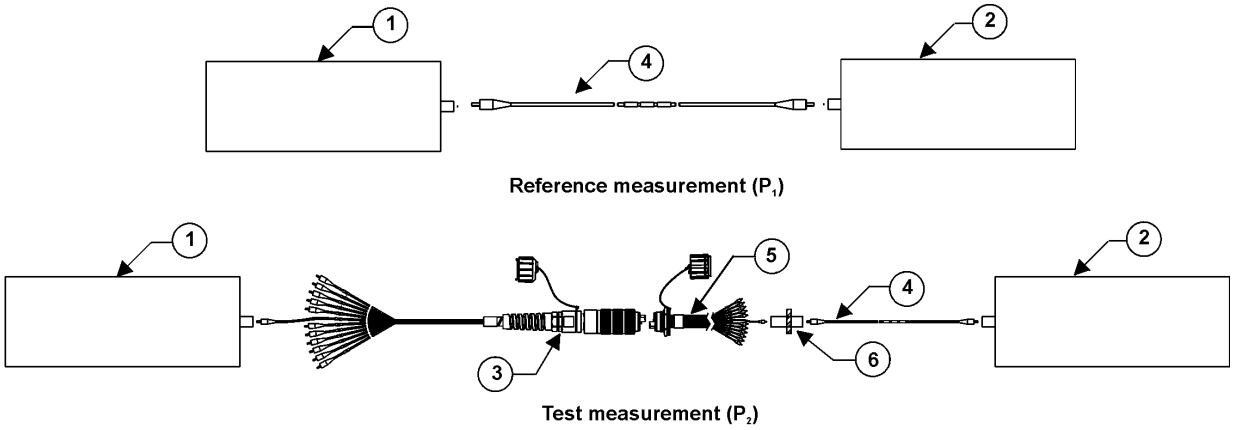

1 Light Source (MM - Use LED source, SM - Use LD source)

2 Power Meter

3 Hermaphroditic MQJ

4 ST - to - ST MQJ (MM - Use MM MQJ, SM - Use SM MQJ)

5 Cable Assembly Under Test

6 ST - to - ST Adapter

FIGURE 7F1-2. Cable assembly measurement: receptacle-to-ST configuration.

Source: https://assist.dla.mil -- Downloaded: 2016-12-10T08:13Z
Check the source to verify that this is the current version before use.

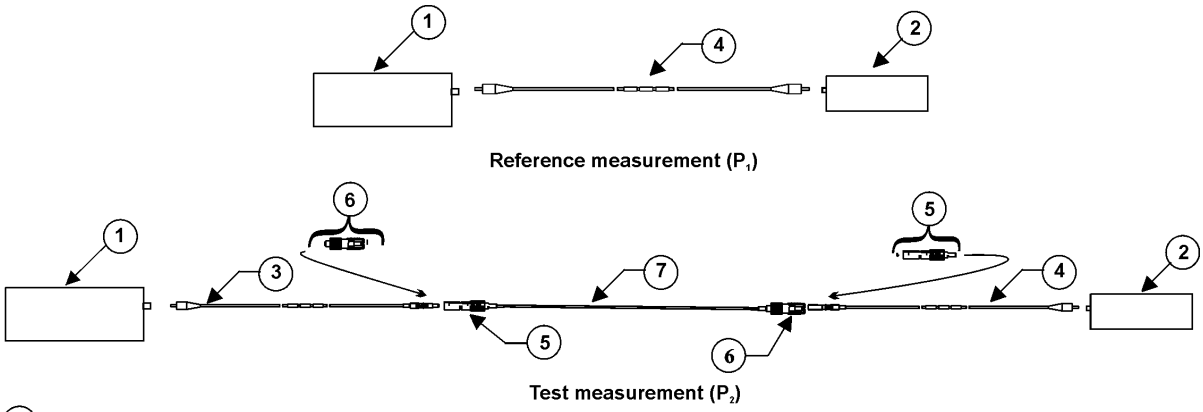

1. Light Source (MM - Use LED, SM - Use LD Source)
2. Power Meter
3. ST - to - Pin Termini MQJ
4. ST - to - ST MQJ (MM - Use MM MQJ, SM - Use SM MQJ)
5. Snap Lock Receptacle
6. Snap Lock Plug
7. Cable Assembly Under Test

FIGURE 7F1-3. Cable assembly measurement: socket termini-to-pin termini configuration.

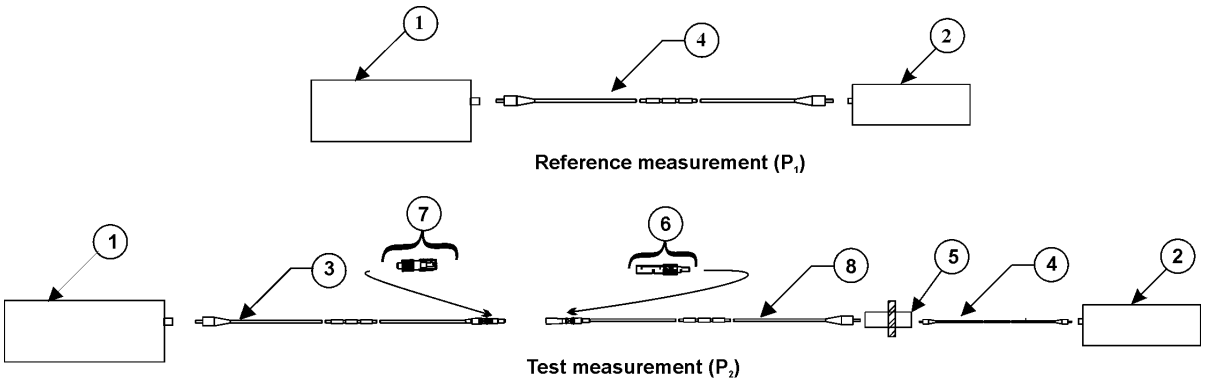

1. Light Source (MM - Use LED source, SM - Use LD source)
2. Power Meter
3. ST - to - Pin Termini MQJ
4. ST - to - ST MQJ (MM - Use MM MQJ, SM - use SM MQJ)
5. ST - to - ST Adapter
6. Snap Lock Receptacle
7. Snap Lock Plug
8. Cable Assembly Under Test

FIGURE 7F1-4. Cable assembly measurement: socket termini–to-ST configuration.

Source: https://assist.dla.mil -- Downloaded: 2016-12-10T08:13Z
Check the source to verify that this is the current version before use.

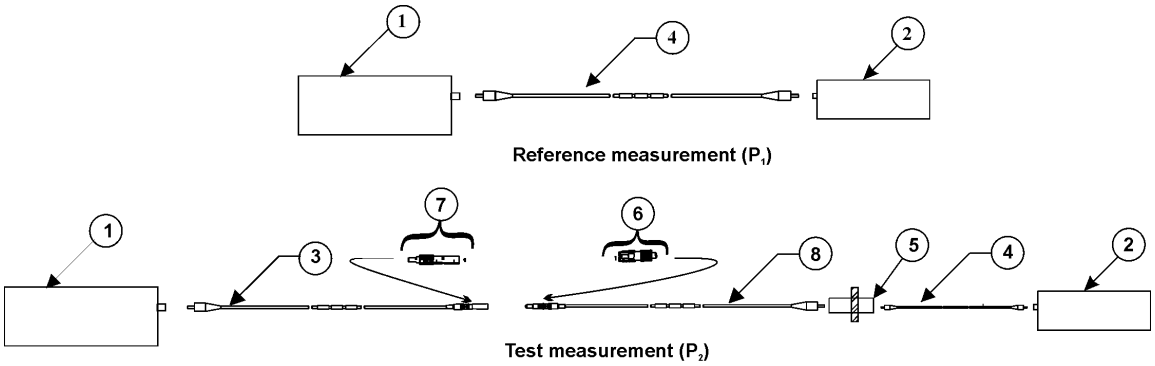

1. Light Source (MM - Use LED source, SM - Use LD source)
2. Power Meter
3. ST - to - Pin Termini MQJ
4. ST - to - ST MQJ (MM - Use MM MQJ, SM - use SM MQJ)
5. ST - to - ST Adapter
6. Snap Lock Receptacle
7. Snap Lock Plug
8. Cable Assembly Under Test

FIGURE 7F1-5. Cable assembly measurement: pin termini-to-ST configuration.

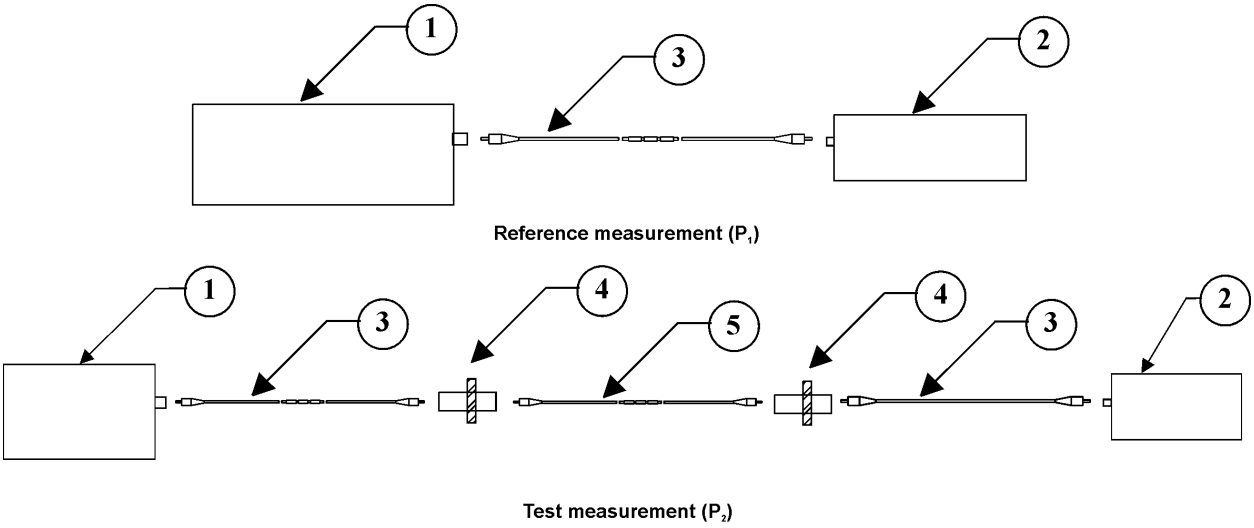

1. Light Source (MM - Use LED source, SM - Use LD source)
2. Power Meter
3. ST-to-ST MQJ (MM - Use MM MQJ, SM - use SM MQJ)
4. ST- to-ST Adapter
5. Cable Assembly Under Test

FIGURE 7F1-6. Cable assembly measurement: ST-to-ST configuration.

Source: https://assist.dla.mil -- Downloaded: 2016-12-10T08:13Z
Check the source to verify that this is the current version before use.

TABLE 7F1-II. Cable assembly loss measurement setup.

Cable assembly	Cable assembly ends terminated with	MQJ (J1) connected to light source	Adapter connecting J1 to the cable assembly under test	Cable assembly being tested	Adapter connecting J2 to the cable assembly under test	MQJ (J2) connected to power meter
Umbilical Assembly	Cable plug – both ends	ST end of MQJ 6009AQ	Not applicable	See columns 1 & 2	Not applicable	ST end of second MQJ 6009AQ
Pigtail Assembly	Cable receptacle to ST single mode	ST end of MQJ 6009AQ with a SM fiber	Not applicable	See columns 1 & 2	ST-to-ST adapter 6007AB	One ST end of SM ST-to-ST MQJ 6009AY
Pigtail Assembly	Cable receptacle to ST multimode	ST end of MQJ 6009AQ with a MM fiber	Not applicable	See columns 1 & 2	ST-to-ST adapter 6007AB	One ST end of MM ST-to-ST MQJ 6009AX
Cable from port/starboard/ midship/hatch to radio room	socket termini to ST, single mode	ST end of SM ST-to-pin termini MQJ 6009AK	Plug snap lock 6009AP on MQJ; receptacle snap lock 6009AR on cable assembly	See columns 1 & 2	ST-to-ST adapter 6007AB	One ST end of SM ST-to-ST MQJ 6009AY
Cable from port/starboard/ midship/hatch to radio room	pin termini to ST, single mode	ST end of SM ST-to-socket termini MQJ 6009AK	Receptacle snap lock 6009AR on MQJ; plug snap lock 6009AP on cable assembly	See columns 1 & 2	ST-to-ST adapter 6007AB	One ST end of SM ST-to-ST MQJ 6009AY
Cable from port/starboard/ midship/hatch to radio room	socket termini to ST, multimode	ST end of MM ST-to-pin termini MQJ 6009AL	Plug snap lock 6009AP on MQJ; receptacle snap lock 6009AR on cable assembly	See columns 1 & 2	ST-to-ST adapter 6007AB	One ST end of MM ST-to-ST MQJ 6009AX source>
Cable from port/starboard/ midship/hatch to radio room	socket termini to ST, multimode	ST end of MM ST-to-socket termini MQJ 6009AM	Receptacle snap lock 6009AR on MQJ; plug snap lock 6009AP on cable assembly	See columns 1 & 2	ST-to-ST adapter 6007AB	One ST end of MM ST-to-ST MQJ 6009AX

Source: https://assist.dla.mil -- Downloaded: 2016-12-10T08:13Z
Check the source to verify that this is the current version before use.

TABLE 7F1-II. Cable assembly loss measurement setup - continued.

Cable assembly	Cable assembly ends terminated with	MQJ (J1) connected to light source	Adapter connecting J1 to the cable assembly under test	Cable assembly being tested	Adapter connecting J2 to the cable assembly under test	MQJ (J2) connected to power meter
Cable from port to starboard	socket termini to pin termini, single mode	ST end of SM ST-to-pin termini MQJ 6009AK	Plug snap lock 6009AP on MQJ; receptacle snap lock 6009AR on cable assembly	See columns 1 & 2	Receptacle snap lock 6009AR on MQJ; plug snap lock 6009AP on cable assembly	ST end of SM ST-to-socket termini MQJ 6009AJ
Cable from port to starboard	socket termini to pin termini, multimode	ST end of MM ST-to-pin termini MQJ 6009AL	Plug snap lock 6009AP on MQJ; receptacle snap lock 6009AR on cable assembly	See columns 1 & 2	Receptacle snap lock 6009AR on MQJ; plug snap lock 6009AP on cable assembly	ST end of MM ST-to-socket termini MQJ 6009AM

Source: https://assist.dla.mil -- Downloaded: 2016-12-10T08:13Z
Check the source to verify that this is the current version before use.

2.2.3 Cable assembly loss calculation for each fiber.

Step 1 - Compare the test results with table 7F1-III for the maximum acceptable loss.

NOTE: Refer to Method 6C1-1 for criterion for an acceptable cable assembly and for corrective measures to be taken if

a. The measured loss is 0.5 dB or more above the maximum acceptable loss

b. The measured loss is less than 0.5 dB above the maximum acceptable loss.

TABLE 7F1-III Maximum acceptable loss for cable assembly

Cable assembly under test	Single mode	Multimode
Umbilical assembly (152 m)	1.7 dB	1.8 dB
Umbilical assembly (30 m)	1.5 dB	1.6 dB
Cross connect assembly	1.5 dB	1.5 dB
ST to termini cable assembly (assume 76 m cable run)	1.6 dB	1.7 dB
Termini to termini cable assembly (assume 152 m cable run)	1.7 dB	1.8 dB
Pigtail assembly with ST’s	1.5 dB	1.5 dB
Pigtail assembly without ST’s	1.5 dB	1.5 dB

3.3 Addendum II. Supplement 7F1-2 to Method 6E1-1 End-to-end attenuation test. Supplement 7F1-2 describes tailoring for optical loss testing of two or more concatenated optical assemblies (two or more individual cable assembles connected together in series) to Method 6E1-1.

3.3.1 Equipment and materials. The equipment and materials in table 7F1-I shall be used to perform this procedure.

3.3.2 Supplement to end-to-end attenuation test. Perform the end-to-end attenuation test with the supplemental information as follows:

Step 1 - Reference measurement setup. Connect the ST-to-ST MQJ between the source and power meter in accordance with Method 6E1 and figures 7F1-1 through 7F1-6).

Step 2 - Test measurement setup. Connect the concatenated cable assembly under test to the optical source and power meter in accordance with Method 6E1, table 7F1-IV, and the applicable figure (see figures 7F1-1 through 7F1-6).

NOTE: For concatenated optical assemblies with single terminus, ST connectors on one or both ends, the ST-to-ST MQJ used to obtain the reference measurement should be used as MQJ 1.

Source: https://assist.dla.mil -- Downloaded: 2016-12-10T08:13Z
Check the source to verify that this is the current version before use.

NOTE: If the concatenated cable assembly under test contains termini that are not installed in a hermaphroditic connector, use the snap lock plug and receptacle to mate the MQJ terminus to the cable assembly terminus.

3.3.3 Maximum acceptable loss for concatenated optical assemblies.

Item 1 Calculate the maximum allowable link loss using the formula in method 6E1 and the average component loss values shown in table 7F1-IV.

Item 2 - Compare the measured end-to-end attenuation to the specified maximum allowable link loss.

NOTE: Refer to Method 6E1-1 for criterion for an acceptable concatenated cable assembly and for corrective measures to be taken if

a. The measured loss is 1.0 dB or more above the maximum acceptable loss.

b. The measured loss is less than 1.0 dB above the maximum acceptable loss.

TABLE 7F1-IV. Maximum component loss values.

Component	Single mode	Multimode
Cable	1.0 dB/km @ 1300 nm	3.5 dB/km @ 850 nm 2.0 dB/km @ 1300 nm
Single terminus, Straight Tip (ST) connector (mated pair)	0.75 dB maximum (0.5 dB average)	0.75 dB maximum (0.5 dB average)
Multiple termini (hermaphroditic) connector (mated pair)	0.75 dB maximum (0.5 dB average)	0.75 dB maximum (0.5 dB average)

NOTE: Use maximum loss values for acceptable loss calculations (pierside connectivity applications).

Source: https://assist.dla.mil -- Downloaded: 2016-12-10T08:13Z
Check the source to verify that this is the current version before use.

METHOD 7G1

PIER INTERCONNECTION BOX INSTALLATION

1. SCOPE.

1.1 Scope. This method describes procedures for pier interconnection box installation.

2. REQUIRED EQUIPMENT AND MATERIALS.

2.1 The equipment and materials in the tables located in the applicable sections of this method shall be used to perform these procedures.

3. PROCEDURES.

3.1 Safety summary. The following safety precautions shall be observed:

a. Do not stare into the end of a fiber until verifying that the fiber is not connected to a laser light source or LED.

3.2. Interconnection box installation.

3.2.1 The interconnection box and the equipment in table 7G1-I shall be used to perform this installation.

TABLE 7G1-I. Equipment and materials.

Description	Quantity
D hole punch (NAVSEA DWG 7325763-1H-6009AH or equal)	1
Interconnection box (NAVSEA DWG 7325761-2-6003AK or equal)	1
Patch panels for interconnection box (NAVSEA DWG 7325761-2-6003AL or equal)	6
Pigtail assembly (NAVSEA DWG 7325760-1B-6000AC or equal)	1
ST-to-ST adapter, single mode, nickel plated brass or stainless steel housing (NAVSEA DWG 7325761-1A-6007AB or equal)	36
Wrench, 1-7/8 in, open end	1
Wrench, 2 in, open end	1

3.2.2 Procedure I. Method 7G1-1 Interconnection box installation (see figure 7G1-1). This installation includes pigtail assembly installation with cable routing.

NOTE: Place the hermaphroditic connection hole at a location in the interconnection box so that the connector can be easily mated/de-mated.

NOTE: Steps 1 and 2 pertain only when installing the interconnection box listed in table 7G1-I.

Step 1 - Install captive screws on the cover as the means to keep interconnection box cover closed. Interconnection box comes with two options to keep the cover closed (other is quick release latch).

Step 2 - Use D hole punch to place a “D hole” in the middle of the interconnection box side panel as shown in figure 7G1-1.

Source: https://assist.dla.mil -- Downloaded: 2016-12-10T08:13Z
Check the source to verify that this is the current version before use.

NOTE: D hole punch in table 7G1-1 is specified for use with interconnection boxes made from the following materials and thickness: made from mild steel with a thickness of 14 gauge (0.078 in) or less, softer metals (aluminum or brass) with a thickness of 12 gauge (0.105 in) or less and plastics (including fiberglass and mildly fibrous materials) with a thickness of 0.135 in or less.

Step 3 - Use a round conduit punch to place the applicable size hole in bottom of interconnection box for trunk cable entrance.

Step 4 - Place single mode ST-to-ST adapters onto each patch panel.

Step 5 - Secure each patch panel inside of the interconnection box.

Step 6 - Place the interconnection box at the location to be mounted.

Step 7 - Position the trunk cable from the pier inside the interconnection box.

Step 8 - Install the interconnection box onto the mounting surface using the metal mounting bracket on the back of the interconnection box (an optional method is to remove the mounting bracket and use the interconnection box holes).

Step 9 - WARNING: Do not place a seal or compound into the trunk cable conduit leading to the interconnection box. If the conduit is sealed and the interconnection box is heated by the sun, a partial vacuum may be formed. This partial vacuum will prevent opening of the interconnection box until cooled or another hole is made.

If applicable, place the conduit fitting into the round interconnection box hole and secure the conduit to the conduit fitting.

Step 10 - Remove the large nut on the hermaphroditic receptacle on the pigtail assembly.

Step 11 - Place the hermaphroditic receptacle inside the interconnection box and through the D hole.

Step 12 - Place and tighten the nut onto the hermaphroditic receptacle.

NOTE: Use a 1-7/8 inch wrench to tighten the nut. Use a 2 inch wrench inside the interconnection box to hold the hermaphroditic connector while tightening the nut.

Step 13 - Route the 1.5 m (5 ft) single fiber cables on the pigtail assembly around the interconnection box using the cable guides. All single fiber cables on the pigtail assembly should be routed at least once around the interconnection box prior to ST connector placement into a ST-to-ST adapter.

NOTE: Routing one-half of the way around the interconnection box then to the termination point is the minimum acceptable routing distance.

NOTE: The exposed portion of single mode, single fiber cable at the end of a multiple fiber cable should be at least 18 in in length to enable single fiber cable to be mandrel wrapped for return loss measurements.

NOTE: Use a wipe dampened with alcohol to clean all connectors and blow them dry with air before making connections.

Step 14 - Place the ST connector on each pigtail assembly, single fiber cable into the designated ST-to-ST adapter

Source: https://assist.dla.mil -- Downloaded: 2016-12-10T08:13Z
Check the source to verify that this is the current version before use.

Step 15 -Route fibers from the trunk cable around the interconnection box per Method 2C1 of this standard. All fibers should be routed around the interconnection box at least three quarters of a turn.

NOTE: Routing one-half of a turn around the interconnection box then to the termination point is the minimum acceptable routing distance.

NOTE: This Method assumes that the trunk cable is terminated into a fan-out unit.

NOTE: Use a wipe dampened with alcohol to clean all connectors and blow them dry with air before making connections.

Step 16 -Place the ST connector on each fiber of the trunk cable into the designated ST-to-ST adapter.

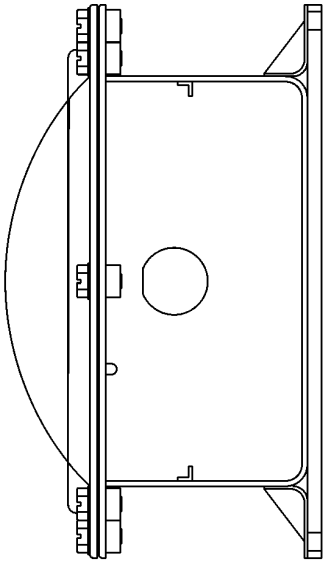

D Hole Orientation: flat faces front (the cover).

FIGURE 7G1-1. D hole orientation.

Source: https://assist.dla.mil -- Downloaded: 2016-12-10T08:13Z
Check the source to verify that this is the current version before use.

METHOD 7H1

HERMAPHRODITIC CONNECTOR POSITIONS, MATING AND CONCATENATION

1. SCOPE.

1.1 Scope. This method describes procedures for configuring the hermaphroditic cable plug for mating with a hermaphroditic receptacle or another hermaphroditic cable plug. Method 7H1-1 covers placing the hermaphroditic cable plug in the forward position and in the back position. Method 7H1-2 covers concatenation of a hermaphroditic cable plug with a crossconnect assembly. Method 7H1-3 covers the attachment of an umbilical assembly or a crossconnect assembly with a hermaphroditic receptacle. Method 7H1-4 covers the detachment of an umbilical assembly or a crossconnect assembly from a hermaphroditic receptacle. (See paragraph 7.1 of this standard practice for more detail.)

2. REQUIRED EQUIPMENT AND MATERIALS.

2.1 The equipment and materials in the tables located in the applicable sections of this method shall be used to perform these procedures.

3. PROCEDURES.

3.1 Safety summary. The following safety precautions shall be observed:

a. Do not stare into the end of a fiber until verifying that the fiber is not connected to a laser light source or LED.

3.2 Cleaning. Perform cleaning per Method 7E1-1 of this standard prior to hermaphroditic connector mating and per Method 7E1-3 prior to connector de-mating.

CAUTION: Throughout the termination process, cleanliness is critical to obtaining a high optical quality connection. Make sure that your hands and the work area are as clean as possible to minimize the ingress of dirt into the connector parts.

3.3 Procedure I - Method 7H1-1 Positioning and mating a hermaphroditic cable plug (see figure 7H1-1). Method 7H1-1 describes placing a hermaphroditic cable plug in the forward and back positions and mating in each of the two positions.

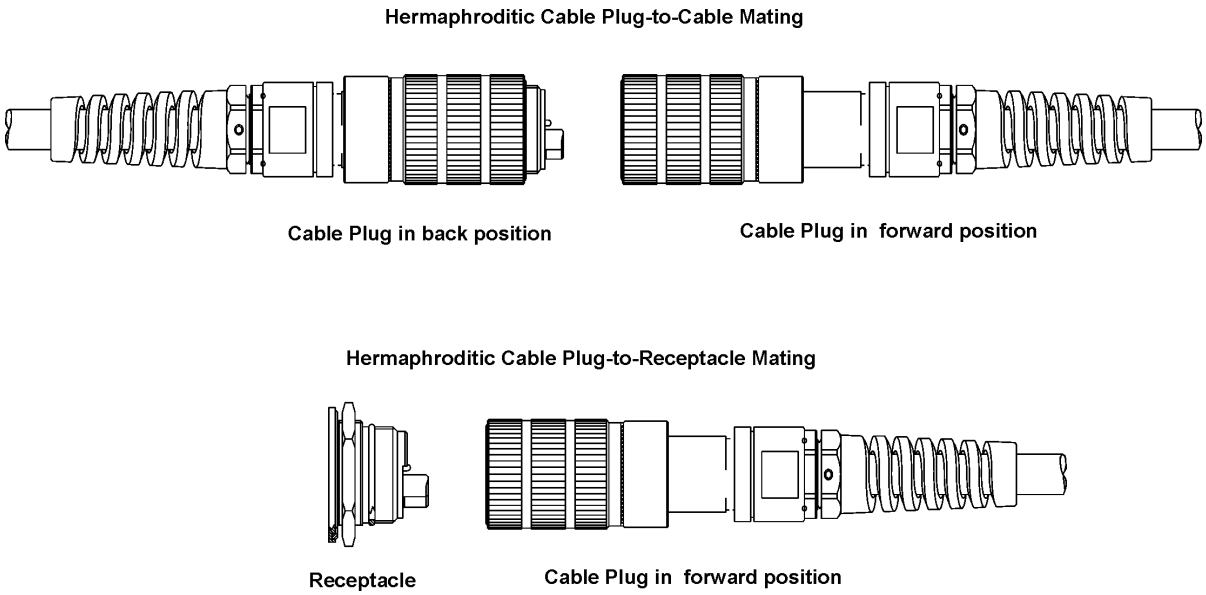

FIGURE 7H1-1. Hermaphroditic connector mating.

Source: https://assist.dla.mil -- Downloaded: 2016-12-10T08:13Z
Check the source to verify that this is the current version before use.

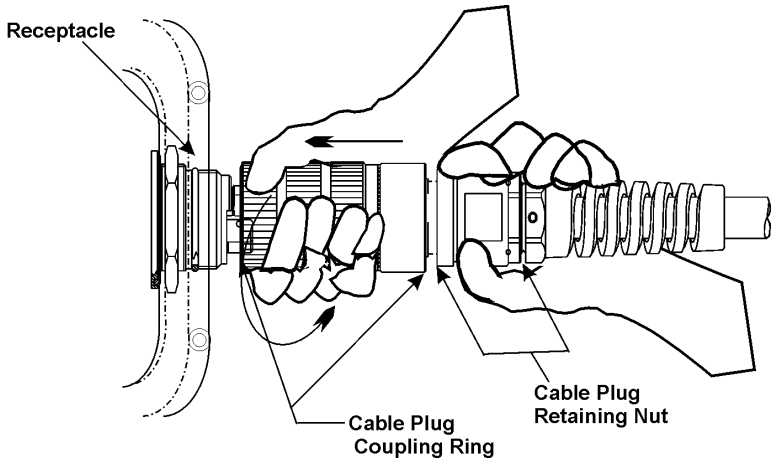

NOTE: Use correct technique for threading a cable plug to receptacle. Hold the rear (retaining nut) of the cable plug in one hand while tightening the cable plug coupling ring with the other hand.

FIGURE 7H1-2. Threading a plug onto a receptacle.

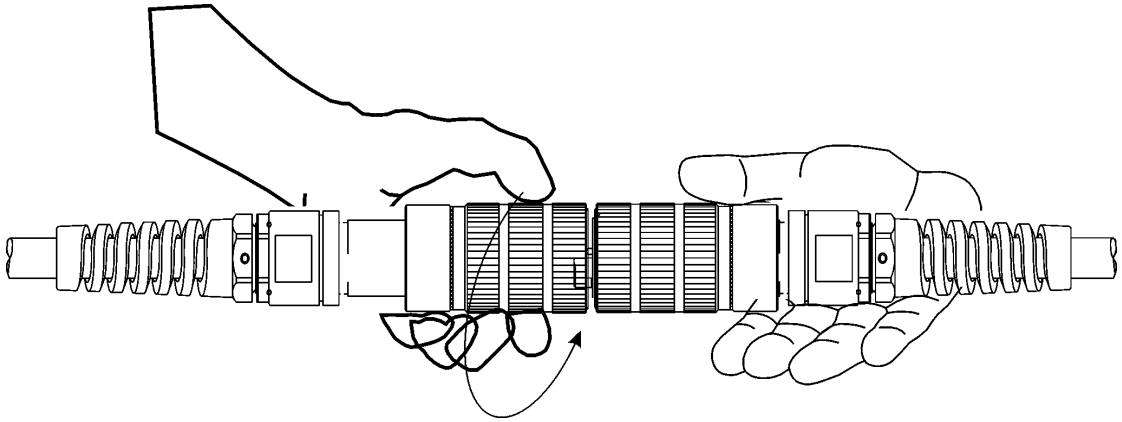

FIGURE 7H1-3. Threading a plug onto a plug.

Source: https://assist.dla.mil -- Downloaded: 2016-12-10T08:13Z
Check the source to verify that this is the current version before use.

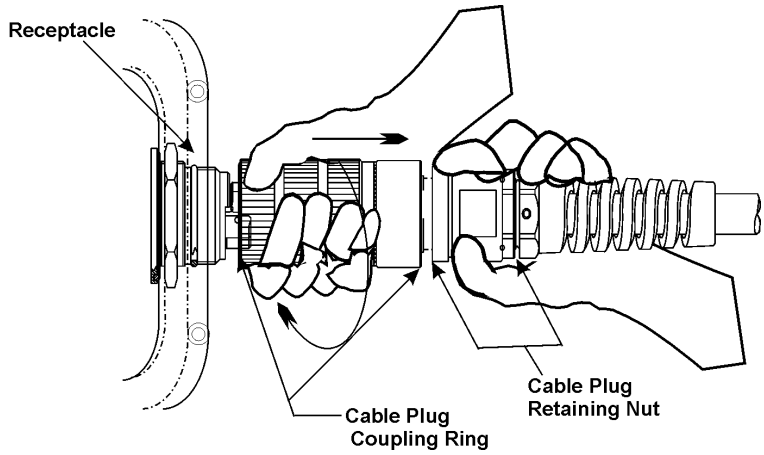

NOTE: Use correct technique for un-threading a cable plug to receptacle. Hold the rear (retaining nut) of the cable plug in one hand while tightening the cable plug coupling ring with the other hand.

FIGURE 7H1-4. Unthreading a cable plug from a receptacle.

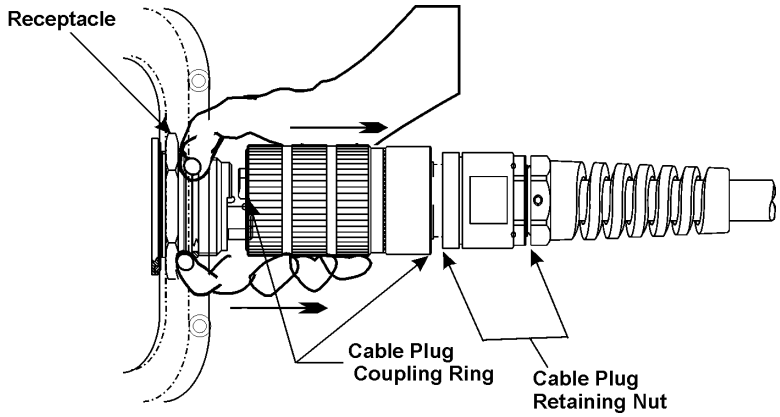

NOTE: Use correct technique to remove un-threaded cable plug from receptacle. After the threads are disengaged, pull straight back on the cable plug to release it from the receptacle. One suggested method is to hold the top of the coupling ring and push on the interconnection box surface with the thumb and forefinger until the cable plug is disengaged from the receptacle.

FIGURE 7H1-5. Disengaging a cable plug from a receptacle.

Source: https://assist.dla.mil -- Downloaded: 2016-12-10T08:13Z
Check the source to verify that this is the current version before use.

3.3.1 Equipment and materials. The equipment and materials in tables 7E1-I shall be used to perform cleaning prior to these procedures.

CAUTION: Throughout the termination process, cleanliness is critical to obtaining a high optical quality connection. Make sure that your hands and the work area are as clean as possible to minimize the ingress of dirt into the connector parts.

3.3.2 Placing the hermaphroditic cable plug in the forward position.

Step 1 - Verify that the hermaphroditic cable plug is in the back position by observing that the external threads are completely exposed (see figure 7H1-1).

NOTE: The hermaphroditic cable plug is locked in the back position.

Step 2 - Rotate the coupling ring on the hermaphroditic cable plug clockwise (when observed from hermaphroditic cable plug front face) until it disengages from the rear threads.

Step 3 - Push coupling ring forward (towards front face) until a physical stop is reached.

Step 4 - Rotate the coupling ring counterclockwise (when observed from hermaphroditic cable plug front face) until it rotates through the threads and then disengages.

3.3.3 Mating the hermaphroditic cable plug in the forward position.

NOTE: See Method 7E1 for proper cleaning procedures to be used prior to connector mating.

Step 1 - Verify that the hermaphroditic cable plug in the forward position is being mated with either a hermaphroditic cable plug in the back position or a hermaphroditic receptacle (see figure 7H1-1 and 7H1-2).

Step 2 - Align the two front faces so that the protruding, horizontal flat surface of each hermaphroditic connector comes into contact with and slides into the recess of the mating hermaphroditic connector.

Step 3 - Press the two front faces together until they come to a stop.

Step 4 - Rotate the coupling ring on the hermaphroditic cable plug in the forward position in a clockwise direction (when observed from hermaphroditic cable plug front face) until a physical stop is reached.

NOTE: Use the correct technique for threading a cable plug to a receptacle. Hold the rear (retaining nut) of the cable plug in one hand while tightening the cable plug coupling ring with the other hand.

NOTE: The coupling ring hits a stop at this point and cannot be further tightened.

3.3.4 Placing the hermaphroditic cable plug in the back position.

Step 1 - Verify that the hermaphroditic cable plug is in the forward position by observing that the internal threads are completely exposed (see figure 7H1-1).

Step 2 - Start by pulling the coupling ring on the hermaphroditic cable plug towards the cable until the coupling ring reaches a stop.

Source: https://assist.dla.mil -- Downloaded: 2016-12-10T08:13Z
Check the source to verify that this is the current version before use.

Step 3 - Rotate the coupling ring on the hermaphroditic cable plug counterclockwise (when observed from hermaphroditic cable plug front face) so that the coupling ring threads engage.

Step 4 - Continue to rotate the coupling ring counterclockwise until it disengages from the threads.

Step 5 - Pull the coupling ring towards the cable until either:

a. The back of the coupling ring reaches a stop and is in contact with the wave washer.

b. The back of the coupling ring reaches a stop before coming into contact with the wave washer. Perform the following to place the coupling ring in contact with the wave washer:

(1) Slowly rotate the coupling ring clockwise (when observed from hermaphroditic cable plug front face) until a key engagement is felt.

(2) Pull the coupling ring towards the cable until contact is made with the wave washer.

Step 6 - Rotate the coupling ring clockwise (when observed from the hermaphroditic cable plug front face) until a stop is reached.

NOTE: This last step places the hermaphroditic cable plug in a “locked’ back position.

3.3.5 Mating the hermaphroditic cable plug in the back position (see figure 7H1-1).

Step 1 - Verify that the hermaphroditic cable plug in the back position is being mated with a hermaphroditic cable plug in the forward position.

Step 2 - Align the two front faces so that the protruding, horizontal flat surface of each hermaphroditic connector comes into contact with and slides into the recess of the mating hermaphroditic connector.

NOTE: See Methods 7E1-1 and 7E1-2 for proper cleaning procedures to be used prior to connector mating.

Step 3 - Press the two front faces together until they come to a stop.

Step 4 - Rotate the coupling ring on the hermaphroditic cable plug in the forward position clockwise (when observed from hermaphroditic cable plug front face) until a physical stop is reached.

NOTE: Use correct technique for threading a cable plug to another cable plug. Hold the rear (retaining nut) of the cable plug in one hand while tightening the cable plug coupling ring with the other hand.

NOTE: The coupling ring hits a stop at this point and cannot be further tightened.

Source: https://assist.dla.mil -- Downloaded: 2016-12-10T08:13Z
Check the source to verify that this is the current version before use.

3.4 Procedure II. Method 7H1-2 Concatenating a crossconnect assembly with a hermaphroditic cable plug. Method 7H1-2 describes the attachment (concatenation procedure) of a crossconnect assembly with a hermaphroditic cable plug on the umbilical assembly.

3.4.1 Equipment and materials. The equipment and materials in tables 7E1-I shall be used to perform cleaning prior to this procedure.

CAUTION: Throughout the termination process, cleanliness is critical to obtaining a high optical quality connection. Make sure that your hands and the work area are as clean as possible to minimize the ingress of dirt into the connector parts.

3.4.2 Concatenation of a crossconnect assembly with an umbilical assembly.

Step 1 - Remove the dust cover on the hermaphroditic connector of the crossconnect assembly that is in the back position

Step 2 - Remove the dust cover on the umbilical assembly.

NOTE: Verify that one connector plug is in the forward position and one is in the back position (see figure 7H1-1).

Step 3 - Position and mate the hermaphroditic cable plug of the crossconnect assembly to the hermaphroditic plug of the umbilical assembly using method 7H1-1.

NOTE: See Methods 7E1-1 and 7E1-2 for proper cleaning procedures to be used prior to connector mating.

Step 4 - Mate the dust cover on the umbilical assembly with the dust cover on the crossconnect assembly.

3.5 Procedure III. Method 7H1-3 Attachment of an umbilical assembly or crossconnect assembly with a hermaphroditic receptacle. Method 7H1-3 describes the attachment of an umbilical assembly or a crossconnect assembly with a hermaphroditic receptacle.

3.5.1 Equipment and materials. The equipment and materials in tables 7E1-I shall be used to perform cleaning prior to this procedure.

CAUTION: Throughout the termination process, cleanliness is critical to obtaining a high optical quality connection. Make sure that your hands and the work area are as clean as possible to minimize the ingress of dirt into the connector parts.

3.5.2 Attachment of an umbilical assembly or a crossconnect assembly with a hermaphroditic receptacle.

Step 1 - Remove the dust cover from the end of the umbilical assembly or the crossconnect assembly (with the hermaphroditic cable plug in the forward position).

Step 2 - Remove the dust cover from the hermaphroditic receptacle on the interconnection box.

Step 3 - Position and mate the hermaphroditic cable plug of the umbilical assembly or the crossconnect assembly to the hermaphroditic receptacle using method 7H1-1.

NOTE: See Methods 7E1-1 and 7E1-2 for proper cleaning procedures to be used prior to connector mating.

NOTE: Use correct technique for threading a cable plug to receptacle. Hold the rear (retaining nut) of the cable plug in one hand while tightening the cable plug coupling ring with the other hand.

Source: https://assist.dla.mil -- Downloaded: 2016-12-10T08:13Z
Check the source to verify that this is the current version before use.

Step 4 - Mate the dust cover on the umbilical assembly or the crossconnect assembly with the dust cover on the hermaphroditic receptacle.

3.6 Procedure IV. Method 7H1-4 De-mating the hermaphroditic connector. Method 7H1-4 describes the detachment of an umbilical assembly or a crossconnect assembly from a hermaphroditic receptacle.

3.6.1 Equipment and materials. The equipment and materials in table 7E1-I shall be used to perform cleaning prior to this procedure.

CAUTION: Throughout the termination process, cleanliness is critical to obtaining a high optical quality connection. Make sure that your hands and the work area are as clean as possible to minimize the ingress of dirt into the connector parts.

3.6.2 De-mating the hermaphroditic receptacle (see figure 7H4 and &H5).

Step 1 - Clean the exterior of the hermaphroditic cable plug, hermaphroditic receptacle and dust covers using Method 7E1-3.

Step 2 - De-mate the two dust covers.

Step 3 - Clean the interior of the dust covers using Method 7E1-3, if dirt or dust is observed.

Step 4 - De-mate the hermaphroditic cable plug from the hermaphroditic receptacle.

NOTE: Use correct technique for un-threading a cable plug to receptacle. Hold the rear (retaining nut) of the cable plug in one hand while un-tightening the cable plug coupling ring with the other hand.

NOTE: Use correct technique to remove un-threaded cable plug from receptacle. After the threads are disengaged, pull straight back on the cable plug to release it from the receptacle. One suggested method is to hold the top of the coupling ring and push on the interconnection box surface with thumb and forefinger until the cable plug is disengaged from the receptacle.

Step 5 - Mate the dust covers onto the hermaphroditic connectors (both cable plug and receptacle) and hand tighten.

Source: https://assist.dla.mil -- Downloaded: 2016-12-10T08:13Z
Check the source to verify that this is the current version before use.

METHOD 7I1

OPTICAL RETURN LOSS TESTING OF PIERSIDE CONNECTIVITY CABLE ASSEMBLIES

1. SCOPE.

1.1 Scope. This method describes tailoring to procedures Method 6K1 for optical return loss testing suited to the pierside connectivity cable assemblies. Optical return loss testing is performed only on single mode cable assemblies or the single mode portion of a hybrid cable assembly. Supplement 7I1-1 tailors Method 6K1 for the optical return loss test of a single cable assembly. Supplement 7I1-2 tailors Method 6K1 for the optical return loss test of two or more concatenated cable assemblies.

2. PROCEDURES.

2.1 Procedure I. Supplement 7I1-1 to Method 6K1 Cable assembly optical return loss measurement. Supplement 7I1-1 describes tailoring to perform optical return loss on a single cable assembly (single mode fibers only).

2.1.1 Equipment and materials. The equipment and materials in table 7I1-I shall be used to perform the procedure in Method 6K1.

TABLE 7I1-I. Equipment and materials.

Description	Quantity
ORLM (Optical Return Loss Meter) (Noyes Fiber Systems Model ORL 3 or equal)	1
MQJ, ST-to-ST connector, 1 meter length, single mode (NAVSEA DWG 7325763-1D [item 6009AY] or equal)	2
SC-to-ST adapter, single mode, split ceramic alignment sleeve, metal housing (NAVSEA DWG 7325763-1D [item 6007BE] or equal)	2
ST-to-ST adapter, single mode, split ceramic alignment sleeve, metal housing (NAVSEA DWG 7325763-1D [item 6007AB] or equal)	2
MQJ, hermaphroditic cable plug to ST connector, 1 meter length (NAVSEA DWG 7325763-1E [item 6009AQ] or equal)	2
MQJ, Socket termini-to-ST connector, 1 meter length, single mode (NAVSEA DWG 7325763-1F [item 6009AJ] or equal)	2
MQJ, Pin termini-to-ST connector, 1 meter length, single mode (NAVSEA DWG 7325763-1F [item 6009AK] or equal)	2
Snap lock, plug, termini-to-termini connection device (NAVSEA DWG 7325763-1F [item 6009AP] or equal)	2
Snap lock, receptacle, termini-to-termini connection device (NAVSEA DWG 7325763-1F [item 6009AR] or equal)	2
Termini insertion tool, straight, M29504 (NAVSEA DWG 7325763 [item 6009BF] or equal)	1
Termini removal tool, M29504 (NAVSEA DWG 7325763 [item 6009BF] or equal)	1
Alignment sleeve insertion and removal tool, M29504 (NAVSEA DWG 7325763 [item 6009BH] or equal)	1

Source: https://assist.dla.mil -- Downloaded: 2016-12-10T08:13Z
Check the source to verify that this is the current version before use.

TABLE 7I1-I. Equipment and materials - continued.

Description	Quantity
Wipes (NAVSEA DWG 6872811-18 or equal)	As required
Alcohol bottle with alcohol/2-propanol or equal (sealable type)	1
Canned air or compressed air	As required

2.1.2 Supplement for ORLM (Optical Return Loss Meter) setup and optical return loss measurement. Perform the optical return loss measurement with the supplemental information as follows:

Step 1 - Reference the ORLM. Perform steps 1 through 9 of Method 6K1, using the setups shown in figures 7I1-1 through 7I1-5 and the supplemental information in the following notes:

NOTE: The mandrel wrap must be maintained during the referencing process.

NOTE: Refer to tables 7I1-I and 7F1-II to select the proper input MQJ for the cable assembly configuration under test.

NOTE: Place a loop, with a diameter of approximately one inch, in the cable of each MQJ, or in each single fiber cable of each multiple fiber MQJ.

Step 2 - Obtaining the optical return loss measurement. Perform steps 10 through 15 of Method 6K1 using the setups shown in figures 7I1-1 through 7I1-5 and the supplemental information in the following notes:

NOTE: If the cable assembly contains termini that are not installed in a hermaphroditic connector, use the snap lock plug and receptacle to mate the MQJ terminus to the cable assembly terminus.

NOTE: - Refer to tables 7I1-I and 7F1-II to select the proper output MQJ for the cable assembly configuration under test.

NOTE: The ORLM displays the return loss value. No keys need to be pressed prior to obtain the measurement.

2.1.3 Cable assembly acceptable return loss for two connection interfaces.

Step 1 - Compare the test results with table 7I1-II for the minimum acceptable return loss.

NOTE: Refer to Method 6K1 for criterion for an acceptable cable assembly and for corrective measures to be taken if the measured return loss is below the minimum acceptable return loss specified in table 7I1-II.

NOTE: The acceptable return loss, specified in table 7I1-II, is for ferrules fabricated with a standard, domed polish.

Source: https://assist.dla.mil -- Downloaded: 2016-12-10T08:13Z
Check the source to verify that this is the current version before use.

TABLE 7I1-II. Minimum acceptable return loss for one cable assembly.

Cable assembly under test	Minimum acceptable return loss
Umbilical assembly (152 m)	28 dB for an assembly
Umbilical assembly (30 m)	28 dB for an assembly
Cable assembly (ST-to-termini)	28 dB for an assembly
Cable assembly (termini-to-termini)	28 dB for an assembly
Cross connect assembly	28 dB for an assembly
Pigtail assembly with ST’s	28 dB for an assembly
Pigtail assembly without ST’s	28 dB for an assembly

Source: https://assist.dla.mil -- Downloaded: 2016-12-10T08:13Z
Check the source to verify that this is the current version before use.

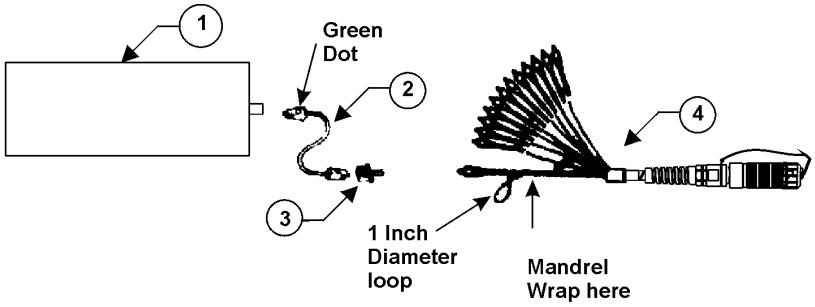

Reference the ORLM configuration

1. ORLM (Optical Return Loss Meter)
2. ORLM interface cable
3. SC-to-ST Adapter
4. Hermaphroditic MQJ

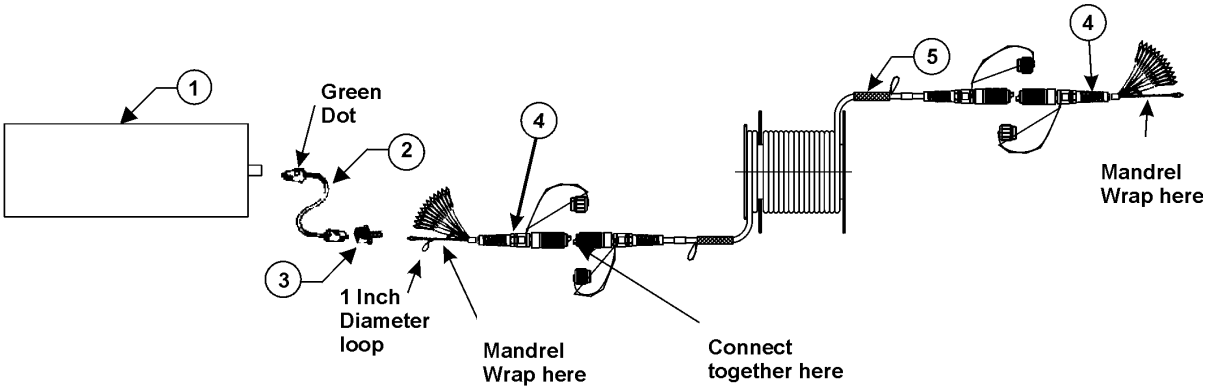

1. ORLM
2. ORLM interface cable
3. SC-to-ST Adapter
4. Hermaphroditic MQJ
5. Cable Assembly Under Test

Return Loss measurement configuration

FIGURE 7I1-1. Return loss measurement: Cable plug-to-cable plug configuration (example: umbilical assembly).

Source: https://assist.dla.mil -- Downloaded: 2016-12-10T08:13Z
Check the source to verify that this is the current version before use.

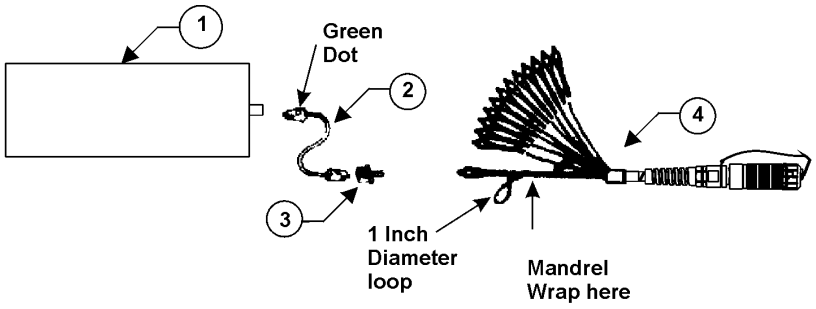

Reference the ORLM configuration

1. ORLM (Optical Return Loss Meter)
2. ORLM interface cable
3. SC-to-ST Adapter
4. Hermaphroditic MQJ

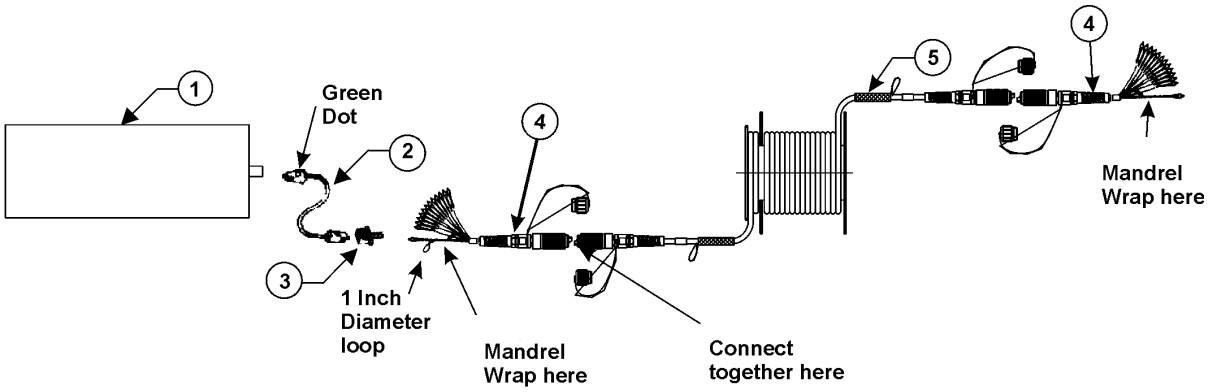

1. ORLM
2. ORLM interface cable
3. SC-to-ST Adapter
4. Hermaphroditic MQJ
5. Cable Assembly Under Test

Return Loss measurement configuration

FIGURE 7I1-2. Return loss measurement: Cable plug-to-ST configuration (example: pigtail assembly).

Source: https://assist.dla.mil -- Downloaded: 2016-12-10T08:13Z
Check the source to verify that this is the current version before use.

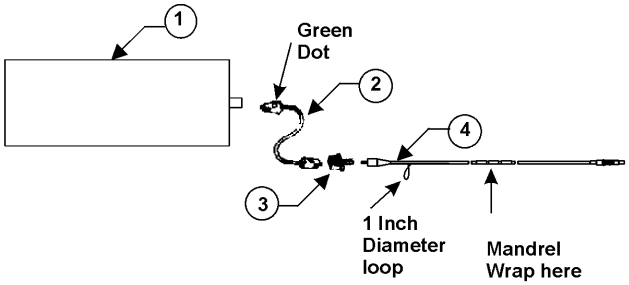

Reference the ORLM configuration

1. ORLM (Optical Return Loss Meter)
2. ORLM interface cable
3. SC-to-ST Adapter
4. ST-to-Pln Termini MQJ

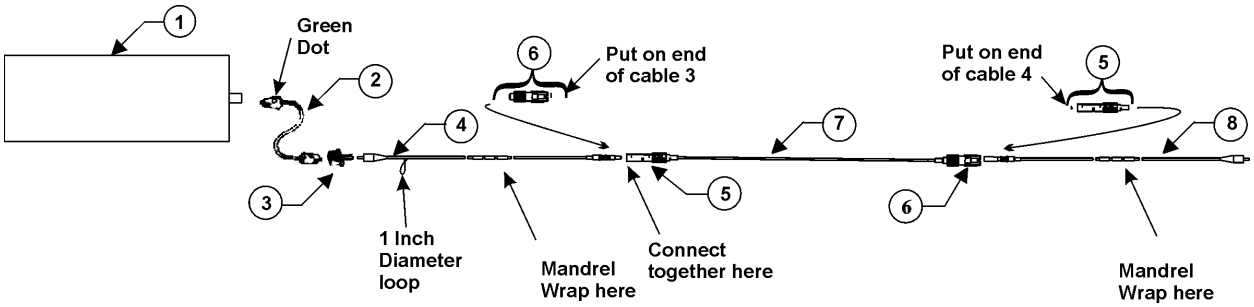

1. ORLM
2. ORLM interface cable
3. SC-to-ST Adapter
4. ST-to-Pin Termini MQJ
5. Snap Lock Receptacle
6. Snap Lock plug
7. Cable assembly under test
8. ST-to-Socket Termini MQJ

Return Loss measurement configuration

FIGURE 7I1-3. Return loss measurement: Socket termini-to-pin termini configuration (example: port-to-starboard cable assembly).

Source: https://assist.dla.mil -- Downloaded: 2016-12-10T08:13Z
Check the source to verify that this is the current version before use.

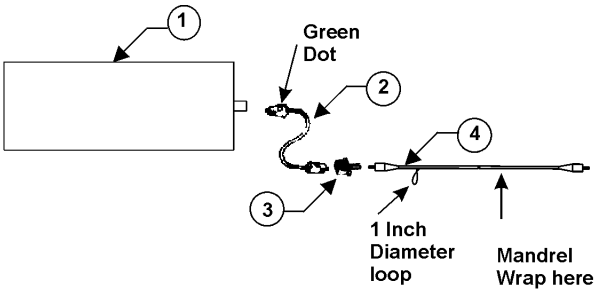

Reference the ORLM configuration

1. ORLM (Optical Return Loss Meter)
2. ORLM interface cable
3. SC-to-ST Adapter
4. ST-to-ST MQJ

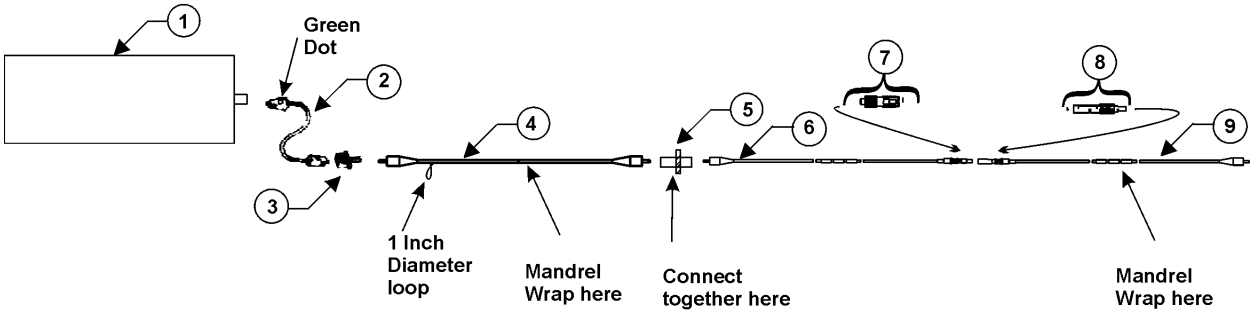

1. ORLM
2. ORLM interface cable
3. SC-to-ST Adapter
4. ST-to-ST MQJ
5. ST-to-ST Adapter
6. Cable assembly under test
7. Snap Lock Plug
8. Snap Lock Receptacle
9. ST-to-Socket Termini MQJ

Return Loss measurement configuration

FIGURE 7I1-4. Return loss measurement: ST-to-pin termini configuration. (example: port-to-radio room and starboard-to-radio room cable assemblies).

Source: https://assist.dla.mil -- Downloaded: 2016-12-10T08:13Z
Check the source to verify that this is the current version before use.

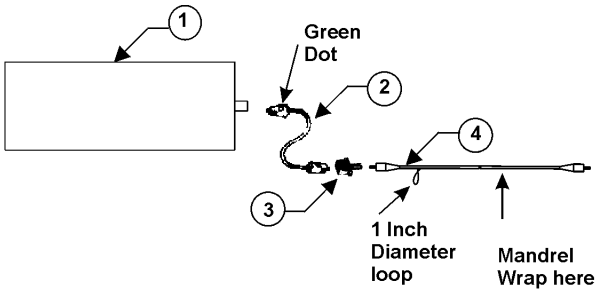

Reference the ORLM configuration

1. ORLM (Optical Return Loss Meter)
2. ORLM interface cable
3. SC-to-ST Adapter
4. ST-to-ST MQJ

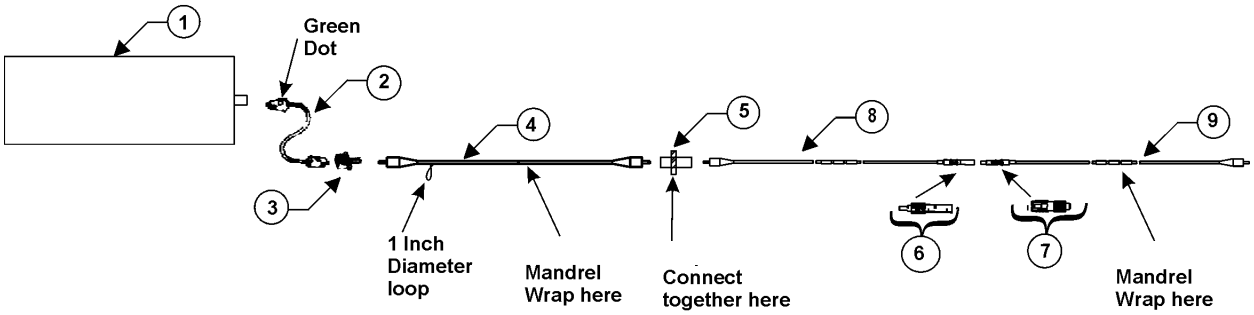

1. ORLM
2. ORLM interface cable
3. SC-to-ST Adapter
4. ST-to-ST MQJ
5. ST-to-ST Adapter
6. Snap Lock Receptacle
7. Snap Lock Plug
8. Cable assembly under test
9. ST-to-Pin Termini MQJ

Return Loss measurement configuration

FIGURE 7I1-5. Return loss measurement: ST-to-socket termini configuration. (example: port-to-radio room and starboard-to-radio room cable assemblies).

Source: https://assist.dla.mil -- Downloaded: 2016-12-10T08:13Z
Check the source to verify that this is the current version before use.

2.2 Procedure II. Supplement 7I1-2 to Method 6K1 Concatenated cable assemblies optical return loss measurement. Supplement 7I1-2 describes tailoring to perform optical return loss on two or more concatenated cable assemblies (single mode fibers only).

2.2.1 Equipment and materials. The equipment and materials in table 7I1-I shall be used to perform the procedure in Method 6L1.

2.2.2 Supplement for ORLM (Optical Return Loss Meter) setup and optical return loss measurement. Perform the optical return loss measurement with the supplemental information as follows:

Step 1 - Reference the ORLM. Perform steps 1 through 9 of Method 6L1, using the setups shown in figures 7I1-1 through 7I1-5 and the supplemental information in the following notes:

NOTE: The mandrel wrap must be maintained during the referencing process.

NOTE: Refer to tables 7I1-I and 7F1-II to select the proper input MQJ for concatenated cable assembly configuration under test.

NOTE: Place a loop, with a diameter of approximately one inch, in the cable of each MQJ, or in each single fiber cable of each multiple fiber MQJ.

Step 2 - Obtaining the optical return loss measurement. Perform steps 10 through 15 of Method 6L1 using the setups shown in figures 7I1-1 through 7I1-5 and the supplemental information in the following notes:

NOTE: If the concatenated cable assemblies contain termini that are not installed in a hermaphroditic connector, use the snap lock plug and receptacle to mate the MQJ terminus to the cable assembly terminus.

NOTE: Refer to tables 7I1-I and 7F1-II to select the proper output MQJ for the concatenated cable assembly configuration under test.

NOTE: The ORLM displays the return loss value. No keys need to be pressed prior to obtain the measurement.

2.2.3 Concatenated cable assembly acceptable return loss for entire run.

Step 1 - Verify that the test results are greater than or equal to 24 dB, the minimum acceptable return loss for concatenated cable assemblies.

NOTE: The return loss for concatenated cable assemblies is considered acceptable if the measured return loss is greater than or equal to 24 dB, regardless of the number of cable assemblies being concatenated.

NOTE: Refer to Method 6L1 for corrective measures to be taken if the measured return loss is below the minimum acceptable return loss specified in Item 1 of 2.2.3.

NOTE: The acceptable return loss, specified in Item 1 of 2.2.3, is for ferrules fabricated with a standard, domed polish.

Source: https://assist.dla.mil -- Downloaded: 2016-12-10T08:13Z
Check the source to verify that this is the current version before use.

METHOD 7J1

OPTICAL ACCEPTANCE TESTING OF PIERSIDE CONNECTIVITY MEASUREMENT QUALITY JUMPERS

1. SCOPE.

1.1 Scope. This method describes tailoring to the procedure for optical loss (attenuation) testing in Method 6F1 suited to the pierside connectivity application for measurement quality jumpers (MQJs). It also provides guidance for the performance of optical reflectance testing of the MQJ. Supplement 7J1-1 tailors Method 6F1 for the optical loss acceptance test of a hermaphroditic connector measurement quality jumper. Other pierside connectivity, measurement quality jumper configurations are to be acceptance tested for optical loss using Method 6F1 of this standard without this supplement. Method 7J1-2 covers the optical reflectance acceptance test for pierside connectivity, measurement quality jumpers. Optical reflectance testing is performed only on single mode cable assemblies or the single mode portion of a hybrid cable assembly.

2. REQUIRED EQUIPMENT AND MATERIALS.

2.1 The equipment and materials in the tables located in the applicable sections of this method shall be used to perform these procedures.

3. PROCEDURES.

3.1 Procedure I. Supplement 7J1-1 to Method 6F1 Hermaphroditic connector measurement quality jumper optical loss acceptance test. Supplement 7J1-1 describes tailoring to Method 6F1 for the optical loss test of the measurement quality jumpers containing a hermaphroditic connector.

3.1.1 Equipment and materials. The equipment and materials in table 7J1-I shall be used to perform the procedure in Method 7J1:

TABLE 7J1-I. Equipment and materials.

Description	Quantity
LED source (NSN 7Z 6625 01 304 1739 or NAVSEA DWG 7325763-1B [item 6009BA] or equal)	8
Laser (LD) source (NAVSEA DWG 7325763-1B [item 6009BB] or equal)	4
Powermeter (NSN 7Z 6625 01 304 1739 or NAVSEA DWG 7325763-1B [item 6009BA] or equal)	1 or 12
MQJ, ST-to-ST connector, 1 meter length, multimode (NAVSEA DWG 7325763-1D [item 6009AX] or equal)	1
MQJ, ST-to-ST connector, 1 meter length, single mode (NAVSEA DWG 7325763-1D [item 6009AY] or equal)	1
ST-to-ST adapter, single mode, split ceramic alignment sleeve, metal housing (NAVSEA DWG 7325763-1D [item 6007AB] or equal)	1
MQJ, Socket termini-to-ST connector, 1 meter length, single mode (NAVSEA DWG 7325763-1F [item 6009AJ] or equal)	2
MQJ, Pin termini-to-ST connector, 1 meter length, single mode (NAVSEA DWG 7325763-1F [item 6009AK] or equal)	2
MQJ, Socket termini-to-ST connector, 1 meter length, multimode (NAVSEA DWG 7325763-1F [item 6009AL] or equal)	4

Source: https://assist.dla.mil -- Downloaded: 2016-12-10T08:13Z
Check the source to verify that this is the current version before use.

TABLE 7J1-I. Equipment and materials - continued.

Description	Quantity
MQJ, Pin termini-to-ST connector, 1 meter length, multimode (NAVSEA DWG 7325763-1F [item 6009AM] or equal)	4
Hermaphroditic compatible, hermaphroditic receptacle, NAVSEA DWG 7379171 part CR-12-DI-A-12 (NAVSEA DWG 7325762 [item 6004AC])	1
Termini insertion tool, straight, M29504 (NAVSEA DWG 7325763 [item 6009BF] or equal)	1
Termini removal tool, M29504 (NAVSEA DWG 7325763 [item 6009BF] or equal)	1
Alignment sleeve insertion and removal tool, M29504 (NAVSEA DWG 7325763 [item 6009BH] or equal)	1
Wipes (NAVSEA DWG 6872811-18 or equal)	As required
Alcohol bottle with alcohol/2-propanol or equal (sealable type)	1
Canned air or compressed air	As required

3.1.2 Supplement to MQJ optical loss test. Perform acceptance testing of candidate Measurement Quality Jumpers (MQJs), with the supplemental information as follows:

Step 1 - Measure the ST end of the candidate hermaphroditic MQJ.

(a) Reference measurement setup. Connect the ST-to-ST reference cable (a qualified measurement quality jumper) between the light source and the power meter in accordance with Method 6F1 and figure 7J1-1.

(b) Test measurement setup. Connect the candidate MQJ to the reference cable (qualified hermaphroditic MQJ) in accordance with Method 6F1, table 7J1-1 and figure 7J1-1.

NOTE: The optical loss of the ST connector end of the candidate hermaphroditic MQJ should be measured first. This measurement may be done with each ST-to-termini jumper removed from the candidate hermaphroditic MQJ. If so, connect the candidate MQJ to the reference cable (qualified ST-to-ST MQJ) using a single-mode ST-to-ST adapter and to the power meter using the applicable power meter adapter head (see figure 7F1-6). Ensure the power meter used has a wide area detector.

Step 2 - Measure the terminus end of the candidate hermaphroditic MQJ.

(a) Reference measurement setup. Connect the ST-to-terminus reference cable (a measurement quality jumper MQJ) between the light source and the power meter in accordance with Method 6F1 and figure 7J1-2.

NOTE: This measurement is done with each ST-to-termini jumper removed from the qualified hermaphroditic MQJ. Use the applicable power meter adapter head. Ensure the power meter used has a wide area detector.

(b) Test measurement setup. Connect the candidate MQJ to the reference cable (a qualified hermaphroditic MQJ) in accordance with Method 6F1, table 7J1-1 and figure 7J1-2.

Source: https://assist.dla.mil -- Downloaded: 2016-12-10T08:13Z
Check the source to verify that this is the current version before use.

NOTE: Assemble the reference cables (qualified hermaphroditic MQJ) after the reference measurements are completed. Place the termini ends of each ST-to terminus jumper into the hermaphroditic cable plug. This assembled hermaphroditic MQJ is identified as the reference cable for the test measurement on the termini end.

3.1.3 Acceptance criteria.

Step 1 - Calculate the mean loss and standard deviation. Perform calculations for each end of each candidate MQJ using the formula in Method 6F1.

Step 2 - Determine if the candidate MQJ is acceptable. A candidate MQJ is acceptable if the mean loss and the standard deviation of the loss of each end is in accordance with table 7J1-II.

NOTE: If the mean loss or the standard deviation of either end is not in accordance with table 7J1-II, the candidate hermaphroditic MQJ shall not be used as an MQJ.

TABLE 7J1-II. Test jumper loss acceptance criteria.

End connection	Acceptable loss (dB)	Single mode Standard deviation (dB)	Multimode Standard deviation (dB)
Commercial ST	$0.0 \leq u_{ST} \leq 0.35$	0.1 max	0.05 max
NAVSEA DWG 7379172 pin terminus	$0.00 \leq u_c \leq 0.70$	0.1 max	0.05 max
NAVSEA DWG 7379171 socket terminus	$0.00 \leq u_c \leq 0.70$	0.1 max	0.05 max

Source: https://assist.dla.mil -- Downloaded: 2016-12-10T08:13Z
Check the source to verify that this is the current version before use.

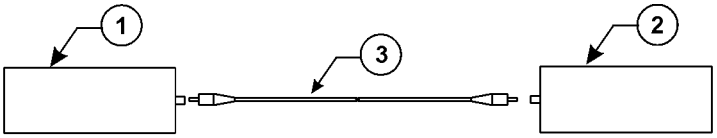

Reference measurement (P_1).

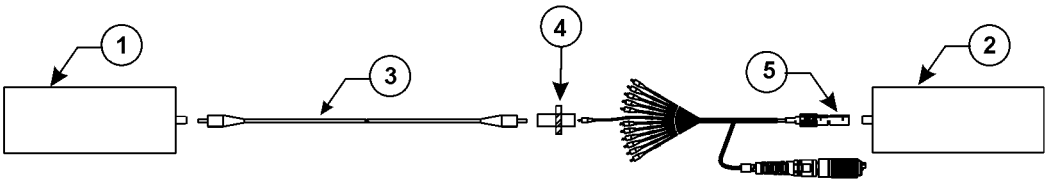

Candidate MQJ test measurement (P_2) for hermaphroditic MQJ configuration.

1. **Light Source (MM - Use LED source, SM - Use LD Source)**
2. **Power Meter**
3. **ST-to-ST MQJ**
4. **SM ST-to-ST Adapter**
5. **Candidate MQJ under test (Individual ST-to-Termini jumper from the candidate MQJ)**

FIGURE 7J1-1. Optical loss MQJ acceptance test: ST connector end. (example: candidate hermaphroditic MQJ).

Source: https://assist.dla.mil -- Downloaded: 2016-12-10T08:13Z
Check the source to verify that this is the current version before use.

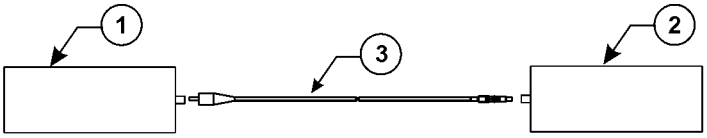

Reference measurement (P_1).

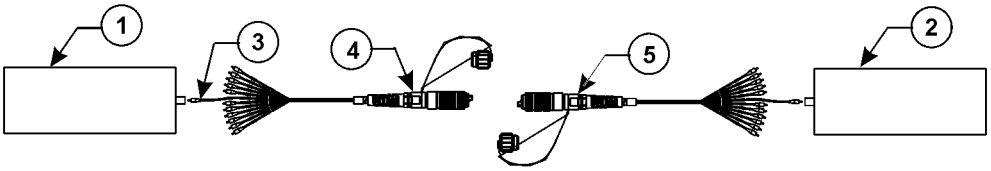

Candidate MQJ test measurement (P_2) for hermaphroditic MQJ configuration.

(1) Light Source (MM - Use LED source, SM - Use LD Source)

(2) Power Meter

(3) Individual ST-to Termini jumper from the qualified hermaphroditic MQJ (Item 4)

(4) Qualified Hermaphroditic MQJ

(5) Candidate MQJ under test.

FIGURE 7J1-2. Optical loss MQJ acceptance test: cable plug end. (Example: candidate hermaphroditic MQJ).

3.2 Procedure II. Method 7J1-2 Measurement quality jumper acceptance test for optical reflectance. Method 7J1-2 describes an optical reflectance test procedure for the acceptance of pierside connectivity, measurement quality jumpers (MQJs).

NOTE: Perform this test only on the termini in the candidate hermaphroditic MQJ with single mode fiber.

NOTE: The optical return loss is the total optical power from multiple connector interfaces that is reflected back towards the source. The reflectance is the optical power reflected back from one connection interface.

NOTE: The optical reflectance measurement can be performed at one connection interface since the candidate MQJ has at least 46 m (18 in) length of exposed and accessible single fiber cable. This exposed cable needs to be mandrel wrapped to perform the reflectance measurement using an ORLM (Optical Return Loss Meter).

3.2.1 Equipment and materials. The equipment and materials in table 7I1-III shall be used to perform the procedure in Method 7J1-2.

Source: https://assist.dla.mil -- Downloaded: 2016-12-10T08:13Z
Check the source to verify that this is the current version before use.

TABLE 7J1-III. Equipment and materials.

Description	Quantity
ORLM (Optical Return Loss Meter) (Noyes Fiber Systems Model ORL 3 or equal)	1
MQJ, ST-to-ST connector, 1 meter length, single mode (NAVSEA DWG 7325763-1D [item 6009AY] or equal)	2
SC-to-ST adapter, single mode, split ceramic alignment sleeve, metal housing (NAVSEA DWG 7325763-1D [item 6007BE] or equal)	2
ST-to-ST adapter, single mode, split ceramic alignment sleeve, metal housing (NAVSEA DWG 7325763-1D [item 6007AB] or equal)	2
MQJ, hermaphroditic cable plug to ST connector, 1 meter length (NAVSEA DWG 7325763-1E [item 6009AQ] or equal)	2
MQJ, Socket termini-to-ST connector, 1 meter length, single mode (NAVSEA DWG 7325763-1F [item 6009AJ] or equal)	2
MQJ, Pin termini-to-ST connector, 1 meter length, single mode (NAVSEA DWG 7325763-1F [item 6009AK] or equal)	2
Snap lock, plug, termini-to-termini connection device (NAVSEA DWG 7325763-1F [item 6009AP] or equal)	2
Snap lock, receptacle, termini-to-termini connection device (NAVSEA DWG 7325763-1F [item 6009AR] or equal)	2
Termini insertion tool, straight, M29504 (NAVSEA DWG 7325763 [item 6009BF] or equal)	1
Termini removal tool, M29504 (NAVSEA DWG 7325763 [item 6009BF] or equal)	1
Alignment sleeve insertion and removal tool, M29504 (NAVSEA DWG 7325763 [item 6009BH] or equal)	1
Wipes (NAVSEA DWG 6872811-18 or equal)	As required
Alcohol bottle with alcohol/2-propanol or equal (sealable type)	1
Canned air or compressed air	As required

3.2.2 ORLM (Optical Return Loss Meter) setup and optical reflectance measurement. Perform the optical reflectance measurement as follows:

WARNING: Do not stare into the end of an optical fiber connected to an LED or laser diode. Light may not be visible but can still damage the eye.

NOTE: Ensure the test equipment calibration is current.

NOTE: Use a wipe dampened with alcohol to clean the adapters/connectors and wipe them dry with a clean, lint free, cotton (100%) cloth before making the connections.

Step 1 - Energize the ORLM.

NOTE: Make sure that the ORLM has been energized for at least 10 minutes, to ensure stable performance, before making measurements.

Step 2 - Set the ORLM in optical return loss mode. (Refer to the manufacturer’s instructions for additional information.)

Source: https://assist.dla.mil -- Downloaded: 2016-12-10T08:13Z
Check the source to verify that this is the current version before use.

Step 3 - Select the 1310 nm wavelength (if the ORLM can perform return loss measurements at multiple wavelengths).

Step 4 - Attach the SC/APC connector of the ORLM interface cable to the optical receptacle of the ORLM.

NOTE: The SC/APC connector is an angle polished SC connector. The angle on the end of the connector ferrule can be observed in a visual inspection.

Step 5 - Select the applicable input MQJ (a qualified MQJ) from table 7J1-III, and connect the input MQJ to the ORLM interface cable

NOTE: Perform ST connector end first, using a ST-ST input MQJ.

NOTE: Use the hybrid adapter (ST-to-SC adapter)to mate the ORLM interface cable to the input MQJ.

NOTE: Refer to figure 7J1-3 for the ST connector end setup and to figure 7J1-4 for the terminus/cable plug end setup.

NOTE: Do not connect the input MQJ to the candidate hermaphroditic MQJ under test. This connection is not completed until step 10.

NOTE: Place a loop, with a diameter of approximately one inch, in the cable of each single mode, single fiber cable of the input MQJ.

Step 6 - Wrap the input MQJ (or the appropriate single fiber cable of the input MQJ) around a 6 mm (0.25 in) mandrel.

NOTE: The input MQJ (or the appropriate single fiber cable of the input MQJ) should be wrapped around the mandrel until a stable value greater than 30 dB is indicated on the ORLM display. Ten mandrel wraps are usually sufficient to obtain a stable value.

Step 7 - Reference the ORLM. (Refer to the manufacturer’s instructions for additional information.)

Step 8 - Unwrap the input MQJ from the mandrel.

NOTE: Do not unwrap the input MQJ from the mandrel until the referencing process is complete.

Step 9 - Verify that the ORLM is displaying a value between 14.3 dB and 15.9 dB.

NOTE: If a different value is displayed, then reconnect the ORLM interface cable to the input MQJ and repeat steps 6, 7 and 8. If this does not remedy the problem, then clean the ORLM interface cable and the input MQJ connections, and repeat steps 4 through 8.

Step 10 -Connect the appropriate end of the candidate MQJ under test to the input MQJ.

NOTE: For the ST connector measurement end, an ST to ST adapter is required to connect the input MQJ to the candidate MQJ under test.

NOTE: For the terminus measurement end, the input MQJ is mated directly to the candidate MQJ under test.

NOTE: If the candidate MQJ contains termini that are not installed in a hermaphroditic connector, use the snap lock plug and receptacle to mate the input MQJ terminus to the candidate hermaphroditic MQJ terminus.

Source: https://assist.dla.mil -- Downloaded: 2016-12-10T08:13Z
Check the source to verify that this is the current version before use.

Step 11 -Wrap the candidate hermaphroditic MQJ (or the appropriate single fiber cable of the candidate hermaphroditic MQJ) around a 6 mm (0.25 in) mandrel.

NOTE: The candidate MJQ (or the appropriate single fiber cable of the candidate MQJ under test) should be wrapped around the mandrel until a stable value is indicated on the ORLM display. Ten mandrel wraps are usually sufficient to obtain a stable value.

Step 12 -Record the value displayed by the ORLM.

NOTE: The ORLM displays the reflectance value. No keys need to be pressed prior to obtaining the measurement.

Step 13 -Unwrap the candidate hermaphroditic MQJ from the mandrel.

NOTE: Do not unwrap the candidate hermaphroditic MQJ from the mandrel until the return loss value has been recorded.

Step 14 -Detach the input MQJ from the candidate hermaphroditic MQJ under test.

Step 15 -Repeat steps 9 through 15 for the other single mode fibers in the candidate hermaphroditic MQJ under test.

Step 16 -Repeat steps 5 through 15 for the termini end of the candidate hermaphroditic MQJ under test, using an applicable input MQJ.

Step 17 -Proceed to 3.2.3.

3.2.3 Candidate MQJ acceptable reflectance for each connection interface.

Step 1 - Verify the measured return loss is within the acceptable range of values identified in table 7J1-IV.

NOTE: The candidate hermaphroditic MQJ is considered acceptable if the measured return loss is within the range of reflectance values shown in table 7J1-IV. If the measured return loss is acceptable, proceed to step 3 below. If the measured return loss is outside of the acceptable limits for reflectance, proceed to step 2 below.

NOTE: The acceptable reflectance range, specified in table 7J1-IV, is for ferrules fabricated with a standard, domed polish.

TABLE 7J1-IV. Acceptable reflectance range per connection interface.

Type of ferrule-to-ferrule interface under test	Acceptable reflectance range at each interface
ST interface	-33 dB to -40 dB
Terminus interface	-33 dB to -40 dB
Hermaphroditic connector interface	-33 dB to -40 dB

Step 2 - Disconnect and clean all the connections and retest. If the measured candidate MQJ reflectance is still unacceptable, re-polish the candidate MQJ terminations or replace the defective components and retest.

Source: https://assist.dla.mil -- Downloaded: 2016-12-10T08:13Z
Check the source to verify that this is the current version before use.

Step 3 - If the candidate MQJ is not going to be immediately connected to its mating connectors, install protective caps over the candidate MQJ connectors.

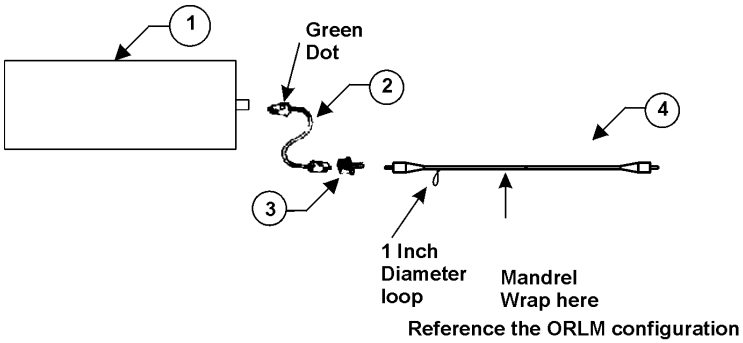

1. ORLM (Optical Return Loss Meter)
2. ORLM Interface Cable
3. SC-to-ST Adapter
4. Qualified ST to ST MQJ (Input MQJ)

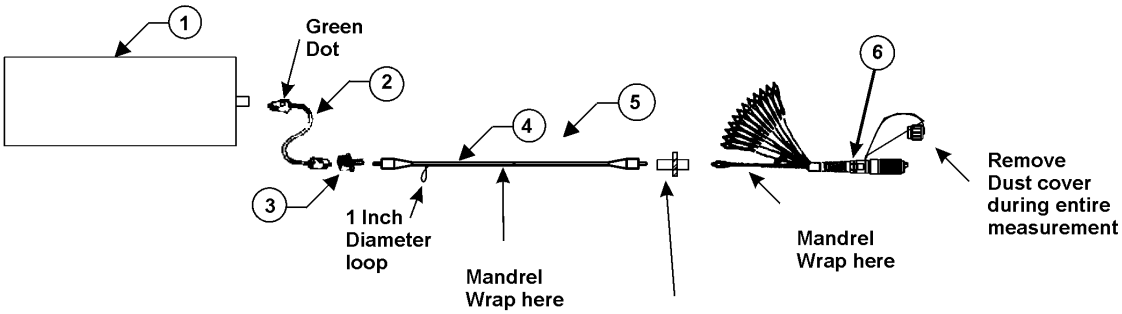

1. ORLM
2. ORLM Interface Cable
3. SC-to-ST Adapter
4. Qualified ST-to-ST MQJ (Input MQJ)
5. ST-to-ST Adapter
6. Candidate MQJ Under Test

Reflectance measurement configuration

FIGURE 7J1-3. Reflectance measurement: ST connector interface. (example: candidate hermaphroditic MQJ).

Source: https://assist.dla.mil -- Downloaded: 2016-12-10T08:13Z
Check the source to verify that this is the current version before use.

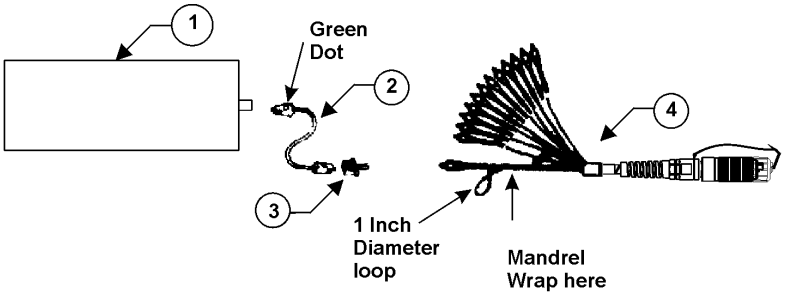

Reference the ORLM configuration

1. ORLM (Optical Return Loss Meter)
2. ORLM Interface Cable
3. SC-to-ST Adapter
4. Qualified Hermaphroditic MQJ (Input MQJ)

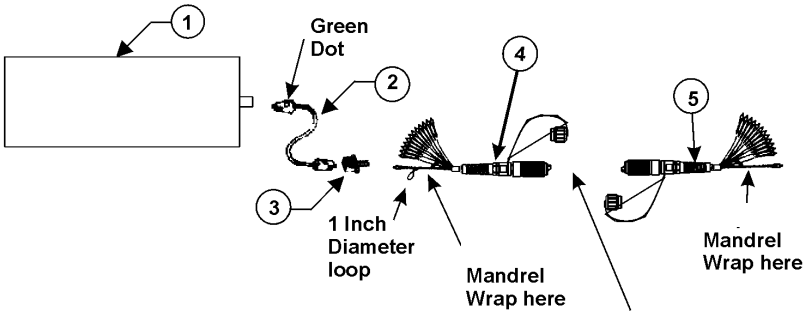

1. ORLM
2. ORLM Interface Cable
3. SC-to-ST Adapter
4. Qualified Hermaphroditic MQJ (Input MQJ)
5. Candidate MQJ Under Test

Reflectance measurement configuration

FIGURE 7J1-4. Reflectance measurement: cable plug interface. (example: candidate hermaphroditic MQJ).

Source: https://assist.dla.mil -- Downloaded: 2016-12-10T08:13Z
Check the source to verify that this is the current version before use.

STANDARDIZATION DOCUMENT IMPROVEMENT PROPOSAL

INSTRUCTIONS

1. The preparing activity must complete blocks 1, 2, 3, and 8. In block 1, both the document number and revision letter should be given.

2. The submitter of this form must complete blocks 4, 5, 6, and 7.

3. The preparing activity must provide a reply within 30 days from receipt of the form.

NOTE: This form may not be used to request copies of documents, nor to request waivers, or clarification of requirements on current contracts. Comments submitted on this form do not constitute or imply authorization to waive any portion of the referenced document(s) or to amend contractual requirements.

I RECOMMEND A CHANGE:	1. DOCUMENT NUMBER MIL-STD-2042-7	2. DOCUMENT DATE (YYMMDD)

3. DOCUMENT TITLE FIBER OPTIC CABLE TOPOLOGY INSTALLATION STANDARD METHODS FOR NAVAL SHIPS (PIERSIDE CONNECTIVITY CABLE ASSEMBLIES AND INTERCONNECTION HARDWARE)

4. NATURE OF CHANGE (Identify paragraph number and include proposed rewrite, if possible. Attach extra sheets as needed.)

5. REASON FOR RECOMMENDATION

6. SUBMITTER

a. NAME (Last, First, Middle initial)	b. ORGANIZATION	
c. ADDRESS (Include Zip Code)	d. TELEPHONE (Include Area Code) (1) Commercial (2) AUTOVON (If applicable)	7. DATE SUBMITTED (YYMMDD)

8. PREPARING ACTIVITY

a. NAME Ruth Butler	b. TELEPHONE (Include Area Code) (1) Commercial (202) 781-3726 (2) AUTOVON 326-3726
c. ADDRESS (Include Zip Code) Commander, Naval Sea Systems Command ATTN: SEA 05Q 1333 Isaac Hull Avenue Southeast, Stop 5160 Washington Navy Yard, DC 20376-5160	**IF YOU DO NOT RECEIVE A REPLY WITHIN 45 DAYS, CONTACT:** Defense Standardization Program Office (DLSC-LM) 8725 John J. Kingman Road, Suite 2533 Fort Belvoir, Virginia 22060-6221 Telephone (703) 767-6888 DSN 427-6888

Source: https://assist.dla.mil -- Downloaded: 2016-12-10T08:13Z
Check the source to verify that this is the current version before use.