INCH-POUND

MIL-C-28876/12D
9 JULY 1992
SUPERSEDING
MIL-C-28876/12C
15 June 1988

MILITARY SPECIFICATION SHEET

CONNECTORS, FIBER OPTIC, CIRCULAR, RECEPTACLE STYLE, MULTIPLE REMOVABLE TERMINI, SCREW THREADS, JAMNUT MOUNTING WITH STRAIGHT STRAIN RELIEF, ENVIRONMENT RESISTING

This specification is approved for use by all Departments and Agencies of the Department of Defense.

The requirements for acquiring the product described herein shall consist of this specification sheet and the issue of the following specification listed in that issue of the Department of Defense Index of Specifications and Standards (DODISS) specified in the solicitation: MIL-C-28876.

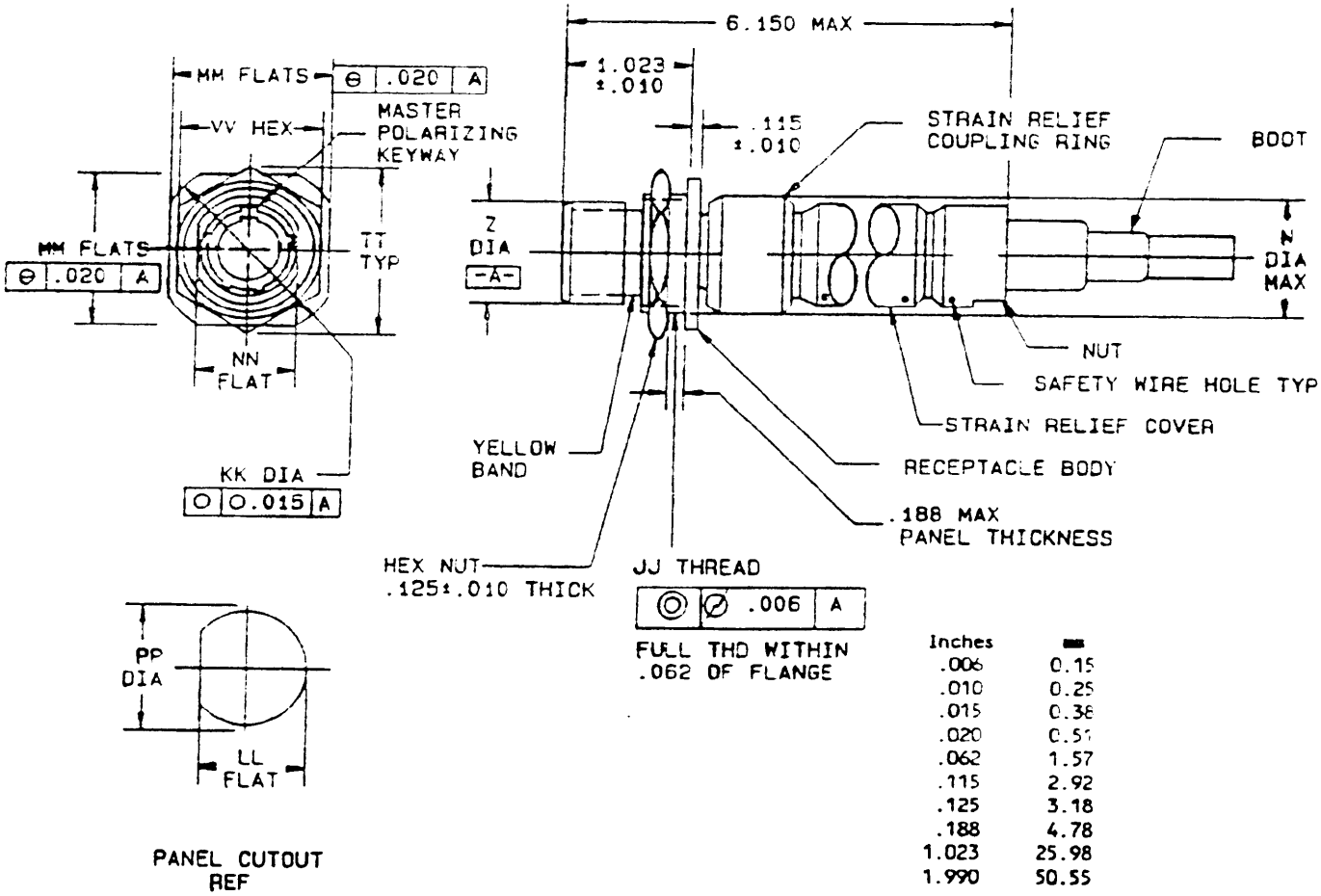

Inches	mm
.006	0.15
.010	0.25
.015	0.38
.020	0.51
.062	1.57
.115	2.92
.125	3.18
.188	4.78
1.023	25.98
1.990	50.55

FIGURE 1. Receptacle connector with straight backshell strain relief.

DISTRIBUTION STATEMENT A. Approved for public release; distribution is unlimited.

Source: https://assist.dla.mil -- Downloaded: 2016-12-30T10:51Z
Check the source to verify that this is the current version before use.

Shell size See note 6	N dia max	LL	KK	MM	Z dia max	MM across flats	PP dia	TT hex corner max	VV hex nut	JJ thread class 2a	BB dia
11 See note 5	.960 (24.38)	.853 (21.67)	1.368 (34.75)	1.272 (32.31)	.750 (19.05)	.841 (21.36)	.890 (22.61)	1.290 (32.77)	1.079 (27.41)	.875-20 UNEF	.979 (24.87)
		.843 (21.41)	1.345 (34.16)	1.252 (31.80)		.832 (21.13)	.880 (22.35)		1.045 (26.54)		.969 (24.61)
13 See note 5	1.085 (27.55)	.978 (24.84)	1.508 (38.30)	1.397 (35.51)	.875 (22.22)	.966 (24.54)	1.015 (25.78)	1.435 (36.45)	1.205 (30.61)	1.000-20 UNEF	1.104 (28.04)
		.968 (24.59)	1.485 (37.72)	1.377 (35.00)		.957 (24.31)	1.005 (25.53)		1.171 (29.74)		1.094 (27.79)
15 See note 5	1.255 (31.88)	1.165 (29.59)	1.608 (42.70)	1.585 (40.27)	1.062 (26.97)	1.153 (29.29)	1.203 (30.56)	1.650 (41.91)	1.392 (35.36)	1.1875-18 UNEF	1.292 (32.82)
		1.155 (29.34)	1.585 (40.26)	1.565 (39.75)		1.144 (29.06)	1.193 (30.30)		1.358 (34.93)		1.282 (32.56)

NOTES:
1. Dimensions are in inches.
2. Metric equivalents are given for general information only.
3. Metric equivalents (mm) are in parenthesis.
4. Dimensions apply after plating.
5. For insert arrangement, see the indicated figure in MIL-STD-2163.
6. The color band shall be yellow and in accordance with EIA-RS-359 for all shell sizes.

FIGURE 1. Receptacle connector with straight backshell strain relief - Continued.

Source: https://assist.dla.mil -- Downloaded: 2016-12-30T10:51Z
Check the source to verify that this is the current version before use.

REQUIREMENTS:

Temperature: Range 1 (-54°C to +65°C operating, -62°C to +71°C storage).

Dimensions and configurations: See figure 1 herein and MIL-C-28876, figures 5 and 9.

Weight:

Shell size	Weight (ounces), maximum
11	8.0
13	9.0
15	13.0

Fiber optic cable:

Cable diameter: 0.315 inch (8.00 mm) or 0.423 inch (10.75 mm) ± 10 percent.

Fiber type: MIL-F-49291/3, MIL-F-49291/4, MIL-F-49291/6, and MIL-F-49291/7.

Insert arrangement: See MIL-STD-2163 for desired shell size.

Termini: Style P (pin) or S (socket). See MIL-T-29504/1, MIL-T-29504/2, MIL-T-29504/12, MIL-T-29504/13, MIL-T-29504/14, and MIL-T-29504/15 (for dummy terminus, see MIL-T-29504/3).

Cleaning procedures: Dampen lens tissue (paper wipe or cotton swab) with a small amount of isopropyl alcohol (minimum 90 percent strength). Gently wipe the face of the connector, removing any debris, particularly around the optical fiber, using clean lint-free lens tissue (paper wipe or cotton swab). Carefully dry the contact with a clean, dry, lint-free tissue.

Shell polarization: 1 through 6 keyway positions. See MIL-C-28876, figure 6.

Marking:

PIN: Marked on flange of receptacle (see table I).

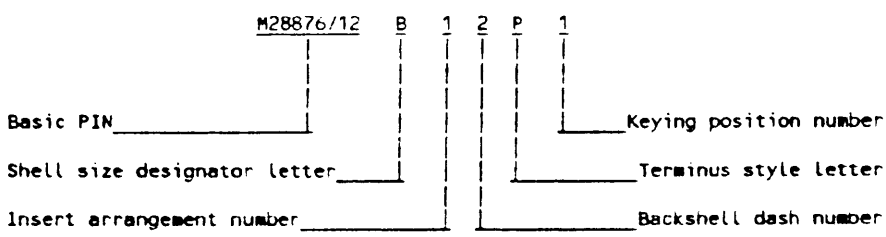

Mating counterpart: Plug connectors specified in MIL-C-28876/6 through MIL-C-28876/9.

Installation and removal tools: As specified in MIL-I-81969/46 through MIL-I-81969/49, MIL-T-83523/5 and MIL-T-83523/8.

For qualified products listing, quality conformance, and periodic inspections, dummy termini shall be used in all unused cavities.

Source: https://assist.dla.mil -- Downloaded: 2016-12-30T10:51Z
Check the source to verify that this is the current version before use.

TABLE I. PIN designators.

Shell size	Designator	Insert arrangement number	Termini	Key position	Maximum cable outer diameter, backshell number		
					1	2	3
11	A	1	P or S	1, 2, 3, 4, 5, or 6	.250 (6.35)	.346 (8.80)	
13	B	1	P or S	1, 2, 3, 4, 5, or 6	.285 (7.24)	.346 (8.80)	
15	C	1 or 2	P or S	1, 2, 3, 4, 5, or 6	.515 (13.08)	.256 (6.50)	.375 (9.53)

Patent notice: The Government does not have a royalty-free license under the following patents for the benefit of manufacturers of the item, either for the Government or for use in equipment to be delivered to the Government:

Patent application no.	Patent expiration date
4,493,529	1/15/2002

Revision letters are not used to denote changes due to the extensiveness of the changes.

CONCLUDING MATERIAL

Custodians:
Army - CR
Navy - SH
Air Force - 85
NASA - NA

Review activities:
Army - MI
Navy - AS, MC
Air Force - 17, 19, 80, 90, 99
DLA - ES

User activities:
Navy - OS, YD
Air Force - 13, 14

Preparing activity:
Navy - SH

Agent: DLA - ES

(Project 6060-0093-12)

Source: https://assist.dla.mil -- Downloaded: 2016-12-30T10:51Z
Check the source to verify that this is the current version before use.