INCH-POUND

MIL-DTL-83517B
26 March 2015
SUPERSEDING
MIL-DTL-83517A
27 October 2005

DETAIL SPECIFICATION

CONNECTOR, COAXIAL, RADIO FREQUENCY FOR COAXIAL, STRIP OR MICROSTRIP TRANSMISSION LINE GENERAL SPECIFICATION FOR

This specification is approved for use by all Departments and Agencies of the Department of Defense.

1. SCOPE

1.1 Scope. This specification covers the general requirements and tests for radio frequency connectors used with coaxial, strip, or microstrip transmission line devices.

1.2 Classification. Connectors are to be of the following types and Part or Identifying Number (PIN), as specified (see 3.1).

1.2.1 PIN. Each connector is to be marked with the complete PIN. The PIN is to be as shown in the following example:

M83517/	1	-	3	1	001
Basic specification number	Specification sheet number		Material (see 1.2.2)	Finish (see 1.2.3)	Number from specification (see 3.1)

1.2.2 Material. The material of the connector body is to be designated by the numbers 0, 1, 3, 4, and 5 as follows:

0 – Brass
1 – Phosphor bronze
3 – Corrosion resistant steel
4 – Copper beryllium
5 – Copper alloy

Comments, suggestions, or questions on this document should be addressed to: DLA Land and Maritime Attn: VAI, P.O. Box 3990, Columbus, Ohio, 43218-3990 or emailed to RFConnectors@dscc.dla.mil. Since contact information can change, you may want to verify the currency of this address information using the ASSIST Online database at https://assist.dla.mil.

AMSC N/A FSC 5935

Source: https://assist.dla.mil -- Downloaded: 2016-11-25T19:47Z
Check the source to verify that this is the current version before use.

1.2.3 Finish. The finish of the connector body is to be designated by the numbers 1 through 5 as follows:

1 – Passivated
2 – Gold
3 – Gold plated body and passivated coupling nut
4 – Silver
5 – Nickel

2. APPLICABLE DOCUMENTS

2.1 General. The documents listed in this section are specified in sections 3 and 4 of this specification. This section does not include documents cited in other sections of this specification or recommended for additional information or as examples. While every effort has been made to ensure the completeness of this list, document users are cautioned that they must meet all specified requirements cited in sections 3 and 4 of this specification, whether or not they are listed.

2.2 Government documents.

2.2.1 Specifications, standards, and handbooks. The following specifications, standards, and handbooks form a part of this document to the extent specified herein. Unless otherwise specified, the issues of these documents are those cited in the solicitation or contract.

FEDERAL SPECIFICATIONS

A-A-59588 - Rubber, Silicone

DEPARTMENT OF DEFENSE SPECIFICATIONS

MIL-DTL-14072 - Finishes for Ground Based Electronic Equipment.
MIL-PRF-39012 - Connectors, Coaxial, Radiofrequency.

(See supplement 1 for applicable specification sheets.)

DEPARTMENT OF DEFENSE STANDARDS

MIL-STD-130 - Identification Marking of U. S. Military Property.
MIL-STD-202 - Test Methods for Electronic and Electrical Component Parts.
MIL-STD-348 - Radio Frequency Connector Interfaces for MIL-DTL-3643, MIL-DTL-3650, MIL-DTL-3655, MIL-DTL-25516, MIL-C-26637, MIL-PRF-39012, MIL-PRF-49142, MIL-PRF-55339, MIL-DTL-83517
MIL-STD-790 - Reliability Assurance Program for Electronic Parts Specifications.

(Copies of these documents are available online at http://quicksearch.dla.mil.)

2.3 Non-Government publications. The following documents form a part of this document to the extent specified herein. Unless otherwise specified, the issues of these documents are those cited in the solicitation or contract.

Source: https://assist.dla.mil -- Downloaded: 2016-11-25T19:47Z
Check the source to verify that this is the current version before use.

ASME INTERNATIONAL

ASME B46.1	-	Surface Texture, (Surface Roughness, Waviness and Lay).
ASME Y14.5M	-	Dimensioning and Tolerancing.

(Copies of these documents are available online at http://www.asme.org or from the ASME Internationsl, Three Park Avenue, New York, NY 10016-5990.)

ASTM INTERNATIONAL

ASTM A342/342M	-	Materials, Feebly Magnetic, Permeability of, Standard Test Methods For.
ASTM B16/B16M	-	Rod, Brass, Free-Cutting, Bar and Shapes for use in Screw Machines.
ASTM B36/36M	-	Plate, Brass, Sheet, Strip and Rolled Bar.
ASTM B121/B121M	-	Plate, Leaded Brass, Sheet, Strip and Rolled Bar.
ASTM B124/B124M	-	Copper and Copper Alloy Forging Rod, Bar and Shapes.
ASTM B139/B139M	-	Rod, Phosphor Bronze, Bar and Shapes.
ASTM B194	-	Copper Beryllium Alloy Plate, Sheet, Strip, and Rolled Bar.
ASTM B196/B196M	-	Rod and Bar, Copper-Beryllium Alloy.
ASTM B197B197M	-	Wire, Alloy Copper-Beryllium.
ASTM B488	-	Gold for Engineering Uses, Electrodepositied Coatings of.
ASTM D2116	-	Molding and Extrusion Materials, FEP-Fluorocarbon.
ASTM D4894	-	Polytetrafluoroethylene (PTFE) Grandular Molding and RAM Extrusion Materials, Standard Specification For.
ASTM D4895	-	Polytetrafluoroehylene (PTFE) Resins Produced From Dispersion.

(Copies of these documents are available from http://www.astm.org.)

ELECTRONIC INDUSTRIES ALLIANCE (EIA)

EIA 364-20	-	Withstanding Voltage Test Procedure for Electrical Connectors, Sockets and Coaxial Contacts.
EIA 364-21	-	Insulation Resistance Test Procedure for Electrical Connectors, Sockets and Coaxial Contacts.
EIA 364-26	-	Salt Spray Test Procedure for Electrical Connectors, Contacts And Sockets.

(Copies of these documents are available online at http://www.eia.org.)

INSTITUTE OF ELECTRICAL AND ELECTRONICS ENGINEERS, INC.

IEEE-287	-	Precision Coaxial Connector

(Copies of these documents are available online from http://www.corporate-communications@ieee.org.)

SOCIETY OF AUTOMOTIVE ENGINEERS, INC (SAE)

SAE-AMS-QQ-N-290	-	Nickel Plating (Electrodeposited).
SAE-AMS-QQ-S-763	-	Steel Bars, Wire, Shapes, and Forgings; Corrosion Resistant.
SAE-AMS2700	-	Passivation of Corrosion Resistant Steel.

Source: https://assist.dla.mil -- Downloaded: 2016-11-25T19:47Z
Check the source to verify that this is the current version before use.

(Copies of these documents are available online from http://www.sae.org.)

2.4 Order of precedence. In the event of a conflict between the text of this document and the references cited herein (except for related specification sheets), the text of this document takes precedence. Nothing in this document, however, supersedes applicable laws and regulations unless a specific exemption has been obtained.

3. REQUIREMENTS

3.1 Specification sheets. The individual item requirements shall be as specified herein and in accordance with the applicable specification sheet. In the event of any conflict between the requirements of this specification and the specification sheet, the latter shall govern.

3.2 Qualification. Connectors furnished under this specification shall be products that are authorized by the qualifying activity for listing on the applicable qualified products list before contract award (see 4.3 and 6.4).

3.2.1 Product assurance requirements. The product assurance requirements of the connector sources furnished under this specification shall be established and maintained in accordance with the procedures and requirements specified in MIL-STD-790 with details specified in 4.1.3.

3.3 Material. Material shall be as specified herein (see table I). If materials other than those specified are used, the contractor shall certify to the qualifying activity that the substitute material enables the connectors to meet the requirements of this specification. Acceptance or approval of any constituent material shall not be construed as a guaranty of the acceptance of the product. When a definite material is not specified, a material shall be used which will enable the connector to meet the requirements of this specification.

TABLE I. Materials.

Component material	Applicable specification
Brass Phosphor bronze Copper beryllium Steel-corrosion resisting TFE fluorocarbon FEP fluorocarbon Silicon rubber	ASTM B16/B16M, ASTM B36/B36M, ASTM B121/B121M, ASTM B124/B124M ASTM B139/B139M ASTM B194, ASTM B196/B196M, ASTM B197/B197M SAE-AMS-QQ-S-763 ASTM D4894, ASTM D4895 ASTM D2116 A-A-59588

3.3.1 Center contacts. The male pin shall be plated to a minimum gold thickness of 50 micro inches (1.27 μm) in accordance with ASTM B488, type II code C, class 1.27, over 50 micro inches (1.27 μm) minimum of nickel in accordance with SAE-AMS-QQ-N-290, class 1, measured anywhere along the mating surface, for all series. The socket contact shall be plated to a minimum of 50 micro inches (1.27 μm) of gold in accordance with ASTM B488, type II, code C, class 1.27, over 50 micro inches (1.27 μm) of nickel in accordance with SAE-AMS-QQ-N-290, class 1, including the I.D., measured at a depth of .040 inch (1.01mm) minimum. The plating on non-significant surfaces in the I.D. shall be of sufficient thickness to ensure plating continuity and uniform utility and protection. This plating may consist of an underplate only. A silver underplate shall not be permitted on any contact, pin or socket.

3.3.1.1 Connector bodies. All copper beryllium bodied connectors shall be gold plated to a minimum thickness of 50 micro inches (1.27μm) in accordance with ASTM B488, type II, code C, class 1.27, over a

Source: https://assist.dla.mil -- Downloaded: 2016-11-25T19:47Z
Check the source to verify that this is the current version before use.

copper flash. All corrosion resistant steel bodied connectors shall be passivated in accordance with SAE-AMS-2700, unless otherwise specified (see 3.1).

3.3.2 Dissimilar metals. Dissimilar metals between which an electromotive couple may exist shall not be placed in contact with each other. Reference is made to MIL-F-14072 for definition of dissimilar metals.

3.3.3 Nonmagnetic materials. All parts (except hermetic sealed connectors) shall be made from materials which are classified as nonmagnetic (see 3.8).

3.3.4 Spring members. Unless otherwise specified (see 3.1), center contact spring members shall be made of copper beryllium.

3.3.5 Recycled, recovered, environmentally preferable, or biobased materials. Recycled, recovered, environmentally preferable, or biobased materials should be used to the maximum extent possible, provided that the material meets or exceeds the operational and maintenance requirements, and promotes economically advantageous life cycle costs.

3.4 Design and construction. Connectors shall be of the design, construction, and physical dimensions in accordance with the applicable specification sheet and interpreted in accordance with ASME Y14.5M.

3.5 Force to engage/disengage. When tested as specified in 4.5.2, the torque necessary to completely couple or uncouple the connectors shall not exceed that specified (see 3.1). Also the longitudinal force necessary to initiate the engaging or disengaging cycle shall not exceed that specified (see 3.1).

3.6 Coupling proof torque. When tested as specified in 4.5.3, the coupling mechanism (threaded types) shall not be dislodged, and the connector shall meet the requirements of 3.5. The interface dimensions of the connector shall remain as specified (see 3.1 and 3.4).

3.7 Contact gaging. When connectors are tested as specified in 4.5.4, the contact dimensions shall be gaged as specified and the contact dimensions shall stay within the specified tolerance (see 3.1).

3.8 Permeability of nonmagnetic materials. When connectors (except hermetic-sealed) are tested as specified in 4.5.5, the permeability (μ) shall not be greater than 2.0.

3.9 Seal (see 6.5 for definitions).

3.9.1 Hermetic-sealed connectors. When connectors are tested as specified in 4.5.6.1, the leakage rate shall not exceed that specified (see 3.1).

3.9.2 Pressurized and weatherproof connectors. When connectors are tested as specified in 4.5.6.2, there shall be no leakage as detected by escaping air bubbles.

3.10 Insulation resistance. When connectors are tested as specified in 4.5.7, the insulation resistance shall not be less than that specified (see 3.1).

3.11 Center contact retention (where applicable see 3.1).

3.11.1 Axial force. When connectors are tested as specified in 4.5.8.1, the center contacts shall withstand the axial force specified (see 3.1). The center contact shall meet the applicable mating dimensions (see 3.1).

Source: https://assist.dla.mil -- Downloaded: 2016-11-25T19:47Z
Check the source to verify that this is the current version before use.

3.11.2 Torque. When connectors are tested as specified in 4.5.8.2, there shall be no rotation of the center contact (see 3.1).

3.12 Dielectric withstanding voltage. When connectors are tested as specified in 4.5.9, there shall be no evidence of breakdown or flashover.

3.13 Corrosion. When connectors are tested in 4.5.10 , there shall be no exposure of the base metal on the interface or mating surface, and they shall meet the requirements of 3.5.

3.14 Voltage standing wave ratio (VSWR). When connectors are tested as specified in 4.5.11, the VSWR shall not exceed that specified over the frequency range specified (see 3.1).

3.15 Radio frequency (RF) transmission loss. When connectors are tested as specified in 4.5.12, the transmission loss shall not exceed that specified (see 3.1).

3.16 Radio frequency (RF) leakage. When connectors are tested as specified in 4.5.13, the total leakage shall not exceed that specified (see 3.1).

3.17 Connector durability. When connectors are tested as specified in 4.5.14, they shall show no evidence of severe mechanical damage and the coupling device shall remain functional. Connectors shall meet the applicable requirements of 3.5 and 3.7.

3.18 Contact resistance. When connectors are tested as specified in 4.5.15, the contact resistance shall be as specified (see 3.1).

3.19 Thermal shock. After testing as specified in 4.5.16, there shall be no visual evidence of mechanical damage to the connector and it shall meet the dielectric withstanding voltage requirement (see 3.12). The contact resistance specified for the center contact shall not be exceeded (see 3.18), and the connector shall meet the VSWR requirements (see 3.14).

3.20 Moisture resistance. When connectors are tested as specified in 4.5.17, there shall be no evidence of damage. They shall withstand the dielectric withstanding voltage specified (see 3.12), and the insulation resistance shall not be less than that specified (see 3.1 and 3.10).

3.21 Radio frequency (RF) high potential withstanding voltage. When connectors are tested as specified in 4.5.18, there shall be no breakdown or flashover (see 3.1).

3.22 Coupling mechanism retention force. When tested as specified in 4.5.19, the coupling mechanism shall not be dislodged from the connector and shall meet the requirements of 3.5 immediately after the test (see 3.1).

3.23 Marking. Connectors and associated fittings shall be permanently and legibly marked in accordance with the general marking requirements of MIL-STD-130 with the military part number (see 1.2.1), CAGE code and final assembly date code. The marking location is optional. When practicable, a location should be picked that will least likely be covered in cable assembly or installation..

3.23.1 JAN and J marking. The United States Government has adopted, and is exercising legitimate control over the certification marks “JAN” and “J”, respectively, to indicate that items so marked or identified are manufactured to, and meet all the requirements of specifications. Accordingly, items acquired to, and meeting all of the criteria specified herein and in applicable specifications shall bear the certification mark “JAN” except that items too small to bear the certification mark “JAN” shall bear the letter “J”. The “JAN” or “J” shall be placed immediately before the part number except that if such location would place a hardship on the manufacturer in connection with such marking, the “JAN” or “J” may be

Source: https://assist.dla.mil -- Downloaded: 2016-11-25T19:47Z
Check the source to verify that this is the current version before use.

located on the first line above or below the part number. Items furnished under contracts or orders which either permit or require deviation from the conditions or requirements specified herein or in applicable specifications shall not bear “JAN” or “J”. In the event an item fails to meet the requirements of this specification and the applicable specification sheets, the manufacturer shall remove completely the military part number and the “JAN” or the “J” from the sample tested and also from all items represented by the sample. The “JAN” and “J” certification mark shall not be used on products acquired to contractor drawings or specifications. The United States Government has obtained Certificate of Registration Number 504,860 for the certification mark “JAN” and Registration Number 2,577,735 for the certification mark “J”.

3.24 Workmanship. Connectors and associated fittings shall be processed in such a manner as to be uniform in quality and shall be free from sharp edges, burrs, and other defects that will affect life, serviceability or appearance.

4. VERIFICATION

4.1 Classification of inspections. The inspection requirements specified herein are classified as follows:

a. Qualification inspection (see 4.3).

b. Conformance inspection (see 4.4).

4.1.1 Test equipment and inspection facilities. Test and measuring equipment and inspection facilities of sufficient accuracy, quality, and quantity to permit performance of the required inspection shall be established and maintained by the contractor. The establishment and maintenance of the calibration system to control the accuracy of the measuring test equipment (Industry or Military Standard) shall be required.

4.1.2 Product assurance program. A product assurance program shall be established and maintained in accordance with MIL-STD-790 (or equivalent as approved by the Qualifying activity). Evidence of such compliance shall be verified by the qualifying activity of this specification as a prerequisite for initial and continued qualification.

4.2 Inspection conditions. Unless otherwise specified, all inspections shall be performed in accordance with the test conditions specified in the “GENERAL REQUIREMENTS” of MIL-STD-202. For each of threaded coupling connectors, where the test is performed on mated pairs, the pair shall be torqued to the specified value (see 3.1).

4.3 Qualification inspection. Qualification inspection shall be performed at a laboratory acceptable to the Government (see 6.4) on sample units produced with equipment and procedures normally used in production.

4.3.1 Sample size. Nine connectors of the same PIN with its mating connector shall be subjected to qualification inspection.

4.3.2 Group qualification. For group qualification of all series of connectors covered by this specification, see 3.1. The Government reserves the right to authorize performance of any or all qualification inspection of additional types in the group that are considered necessary for qualification within each group.

4.3.3 Inspection routine. The sample shall be subjected to the inspection specified in table II. All sample units shall be subjected to the inspection of group I. The sample units shall then be divided into

Source: https://assist.dla.mil -- Downloaded: 2016-11-25T19:47Z
Check the source to verify that this is the current version before use.

three groups consisting of three connectors each. The sample units shall then be subjected to the inspection for their particular group and in the sequence given for that group.

4.3.4 Failures. One or more failures shall be cause for refusal to grant qualification approval.

4.3.5 Retention of qualification. To retain qualification, the contractor shall verify in coordination with the qualifying activity the capability of manufacturing products which meet the performance requirements of this specification. Refer to the qualifying activity for the guidelines necessary to retain qualification to this particular specification. The contractor shall immediately notify the qualifying activity at any time that the inspection data indicates failure of the qualified products to meet the performance requirements of this specification.

4.3.6 Extension of qualification. Manufacturers who have products listed on QPL-39012 and produce connectors of the same series in accordance with this specification, may apply to the qualifying activity for extension of qualification to this specification, provided the interfacial coupling, materials, and plating of the connectors are identical, and the connector successfully meets the requirements of groups I, II, III, and IV of table II.

4.4 Conformance inspection.

4.4.1 Inspection of product for delivery. Inspection of product for delivery shall consist of groups A and B inspection.

4.4.1.1 Inspection lot. An inspection lot shall consist of all connectors of the same part number produced under essentially the same conditions, and offered for inspection at one time.

4.4.1.2 Group A inspection. Group A inspection shall consist of the inspections specified in table III in the order shown.

4.4.1.2.1 Sampling plan (group A). Table III tests shall be performed on a production lot basis. Samples shall be selected in accordance with table IV. If one or more defects are found, the lot shall be screened for that particular defect and defective parts removed. A new sample of parts shall be selected in accordance with table IV and all group A tests again performed. If one or more defects are found in the second sample, the lot shall be rejected and shall not be supplied to this specification.

Source: https://assist.dla.mil -- Downloaded: 2016-11-25T19:47Z
Check the source to verify that this is the current version before use.

TABLE II. Qualification inspection.

Inspection	Requirement paragraph	Test method paragraph
Group I		
Visual and mechanical inspection:		
Material	3.3	4.5.1
Finish	3.3.1	4.5.1
Dissimilar metals	3.3.2	4.5.1
Design and construction (dimensions)	3.4	4.5.1
Marking	3.23	4.5.1
Force to engage/disengage	3.5	4.5.2
Coupling force torque	3.6	4.5.3
Design and construction	3.4	4.5.1
Force to engage/disengage	3.5	4.5.2
Contact gaging	3.7	4.5.4
Permeability of nonmagnetic materials	3.8	4.5.5
Workmanship	3.24	4.5.1
Seal	3.9	4.5.6
Hermetic sealed connectors	3.9.1	4.5.6.1
Pressurized and waterproofed connectors	3.9.2	4.5.6.2
Insulation resistance	3.10	4.5.7
Group II 1/		
Center contact retention	3.11	4.5.8
Axial force	3.11.1	4.5.8.1
Torque	3.11.2	4.5.8.2
Dielectric withstanding voltage	3.12	4.5.9
Corrosion	3.13	4.5.10
Force to engage/disengage	3.5	4.5.2
Group III		
VSWR	3.14	4.5.11
RF transmission loss 2/	3.15	4.5.12
RF leakage 2/	3.16	4.5.13
Connector durability	3.17	4.5.14
Force to engage/disengage	3.5	4.5.2
Contact gaging	3.7	4.5.4
Group IV		
Contact resistance	3.18	4.5.15
Thermal shock	3.19	4.5.16
Dielectric withstanding voltage	3.12	4.5.9
Contact resistance	3.18	4.5.15
VSWR	3.14	4.5.11
Moisture resistance	3.20	4.5.17
Dielectric withstanding voltage	3.12	4.5.9
Insulation resistance	3.10	4.5.7
RF high potential withstanding voltage 2/	3.21	4.5.18
Coupling mechanism retention force	3.22	4.5.19
Force to engage/disengage	3.5	4.5.2

Source: https://assist.dla.mil -- Downloaded: 2016-11-25T19:47Z
Check the source to verify that this is the current version before use.

TABLE II. Qualification inspection – continued.

1/ See 3.1.
2/ These tests to be performed only during initial qualification as long as the qualifying design and manufacturing process has not been changed.

TABLE III. Group A inspection. 1/

Inspection	Requirement paragraph	Test method paragraph	Sampling procedure
Visual and mechanical inspection			
Material	3.3	4.5.1	
Finish	3.3.1	4.5.1	
Dissimilar metals	3.3.2	4.5.1	
Design and construction	3.4	4.5.1	
Marking	3.23	4.5.1	See table IV
Workmanship	3.24	4.5.1	
Seal 2/	3.9	4.5.6	
Hermetic seal connectors	3.9.1	4.5.6.1	
Pressurized and waterproof	3.9.2	4.5.6.2	
Dielectric withstanding voltage	3.12	4.5.9	

1/ Verification may be accomplished using the manufacturer's process controls providing these controls are clearly equal to or more stringent than the requirements of this specification.
2/ These are in-process tests (100% inspection required).

4.4.1.2.2 Visual inspection (group A inspection). Each connector shall be visually examined for completeness, workmanship, and identification requirements. Attention shall be given to those assemblies that require a gasket to determine the condition of the gasket. Gaskets missing, twisted, buckled, kinked, or damaged in any way shall be cause for rejection.

TABLE IV. Group A sampling plan.

Lot size	Visual and mechanical inspection
1 to 19	All
20 to 280	20
281 to 1,200	47
1,201 to 3,200	53
3,201 to 10,000	68
10,001 to 35,000	77
35,001 to 150,000	96
150,001 to 500,000	119
500,001 to over	143

4.4.1.3 Group B inspection. Group B inspection shall consist of the inspections specified in table V in the order shown, and shall be made on sample units which have been subjected to and passed the group A inspection. Connectors having identical piece parts may be combined for lot purposes and shall be in proportion to the quantity of each PIN numbered connector produced.

Source: https://assist.dla.mil -- Downloaded: 2016-11-25T19:47Z
Check the source to verify that this is the current version before use.

4.4.1.3.1 Group B sampling plan. A sample of parts shall be randomly selected in accordance with table VI. If one or more defects are found, the lot shall be screened for that particular defect and defective parts removed. After screening and removal of defects, a new sample of parts shall be randomly selected and subjected to all tests in accordance with table V. If one or more defects are found in the second sample, the lot shall be rejected and shall not be supplied to this specification.

TABLE V. Group B inspection.

Inspection	Requirement paragraph	Test method paragraph
Force to engage/disengage	3.5	4.5.2
Coupling proof torque	3.6	4.5.3
Design and construction	3.4	4.5.1
Force to engage/disengage	3.5	4.5.2
Contact gaging	3.7	4.5.4
Permeability of nonmagnetic materials	3.8	4.5.5
Insulation resistance	3.10	4.5.7
VSWR	3.14	4.5.11

TABLE VI. Group B Sampling Plan

Lot size	Sample size	VSWR sample size
1 to 4	ALL	1
5 to 15	5	1
16 to 50	5	2
51 to 90	5	3
91 to 150	11	3
151 to 280	13	3
281 to 500	16	3
501 to 1,200	19	5
1,201 to 3,200	23	5
3,201 to 10,000	29	5
10,001 to 35,000	35	5
35,001 and over	40	8

4.4.1.3.2 Disposition of sample units. Sample units which have passed all the group B inspection may be delivered on the contract or purchase order, if the lot is accepted. Any connector deformed or otherwise damaged during testing shall not be delivered on the contract or order.

4.4.2 Periodic inspection. Periodic inspection shall consist of group C. Except where the results of these inspection shown noncompliance with the applicable requirements (see 4.4.2.1.4), delivery of products which have passed groups A and B shall not be delayed pending the results of these periodic inspections.

Source: https://assist.dla.mil -- Downloaded: 2016-11-25T19:47Z
Check the source to verify that this is the current version before use.

4.4.2.1 Group C inspection. Group C inspection shall consist of the inspections specified in table VII, in the order shown. Group C inspection shall be made on sample units selected from inspection lots which have passed the groups A and B inspection.

4.4.2.1.1 Sampling plan. Six sample units of the same part number shall be selected from the first lot produced after the date of notification of qualification. Thereafter, six sample units of the same part number shall be selected from current production after 200,000 connectors have been produced, or not less than once every 3 years, whichever occurs first. The sample units shall be divided equally and subjected to the inspection of the three subgroups.

4.4.2.1.2 Failures. If one or more sample units fail to pass group C inspection, the lot shall be considered to have failed.

4.4.2.1.3 Disposition of sample units. Sample units which have been subjected to group C inspection shall not be delivered on the contract or order.

4.4.2.1.4 Noncompliance. If a sample fails to pass group C inspection, the manufacturer shall notify the qualifying activity and the cognizant inspection activity of such failure and take corrective action on the materials or processes, or both, as warranted, and on all units of product which can be corrected and which are manufactured under essentially the same materials and processes, and which are considered subjected to the same failure. Acceptance and shipment of the product shall be discontinued until corrective action acceptable to the qualifying activity has been taken. After the corrective action has been taken, group C inspection shall be repeated on additional sample units (all tests and examinations, or the test which the original sample failed, at the option of the qualifying activity). Groups A and B inspections may be reinstituted; however, final acceptance and shipment shall be withheld until the group C inspection has shown that the corrective action was successful. In the event of failure after reinspection, information concerning the failure shall be furnished to the cognizant inspection activity and the qualifying activity.

Source: https://assist.dla.mil -- Downloaded: 2016-11-25T19:47Z
Check the source to verify that this is the current version before use.

TABLE VII. Group C inspection. 1/

Inspection	Requirement paragraph	Test method paragraph
Subgroup 1		
Center contact retention	3.11	4.5.8
Corrosion	3.13	4.5.10
Force to engage/disengage	3.5	4.5.2
Subgroup 2		
VSWR	3.14	4.5.11
RF transmission loss 1/	3.15	4.5.12
RF leakage 1/	3.16	4.5.13
Connector durability	3.17	4.5.14
Contact gaging	3.7	4.5.4
Force to engage/disengage	3.5	4.5.2
Subgroup 3		
Contact resistance	3.18	4.5.15
Thermal shock	3.19	4.5.16
Dielectric withstanding voltage	3.12	4.5.9
Contact resistance	3.18	4.5.15
VSWR	3.14	4.5.11
Moisture resistance	3.20	4.5.17
Dielectric withstanding voltage	3.12	4.5.9
Insulation resistance	3.10	4.5.7
RF high potential withstanding voltage 1/	3.21	4.5.18
Coupling mechanism retention force	3.22	4.5.19
Design and construction	3.4	4.5.1
Force to engage/disengage	3.5	4.5.2

1/ These tests are only to be performed during initial qualification, as long as the qualifying design and manufacturing process does not change.

Source: https://assist.dla.mil -- Downloaded: 2016-11-25T19:47Z
Check the source to verify that this is the current version before use.

4.5 Methods of inspection. Test parameters given in the following tests assure connector integrity within typical operating conditions and application. Methods of inspection given in the specification shall be the only acceptable methods unless an alternate method has been agreed to by the qualifying authority prior to performance of the test. The test methods described herein are the preferred methods and shall be the referee method in cases of dispute.

4.5.1 Visual and mechanical inspection. Connectors and associated fittings shall be inspected to verify that the design, construction, physical dimension, marking, and workmanship are in accordance with the applicable requirements (see 3.1, 3.3, 3.4, 3.23, and 3.24).

4.5.1.1 Dimensional inspection. Mating dimensions shall be inspected by mating the connector with its applicable mating gages or other suitable means acceptable to the Government.

4.5.2 Force to engage/disengage (see 3.5). The connector shall be engaged with its mating standard part (see 3.1). During the entire coupling/uncoupling cycle (until the connector is fully engaged/disengaged) the forces and/or torques necessary shall be as specified (see 3.1). A thread coupled connector is fully engaged with its mating standard part when their reference planes (see 3.1) coincide. The mating standard part is a steel jig containing the critical interface dimensions finished to the tolerances specified (see 3.1). As an option for this test, a qualified mating connector may be used in place of the standard steel jig with the approval of the Qualifying activity. Its spring members when applicable shall be heat treated beryllium copper. The surface finish or mating surfaces shall be 16 microinches maximum, in accordance with ASME B46.1.

4.5.3 Coupling proof torque (see 3.6). The connector under test shall be engaged with its mating standard part (gage) and the coupling nut tightened to the torque value specified (see 3.1). After one minute the connector under test and its mating standard part shall be disengaged.

4.5.4 Contact gaging (see 3.7). After insertion of the specified oversize pin the specified number of times (see 3.1), the contact to be tested shall be held rigid by means of a suitable jig or fixture. A gage containing the test pin or test ring and a suitable force indicating dial shall be aligned to within .004 TIR of any plane passing through the axis of the contact under test. Engagement or withdrawal of the test pin or test ring shall be made smoothly and at such a rate that the dial does not bounce or otherwise give a false reading. The test pin or test ring may be chamfered to facilitate entry, but the specified engagement length shall not include the chamfer length, and the finish shall be as specified and in accordance with ASME B46.1.

4.5.5 Permeability of nonmagnetic materials (see 3.8). The permeability of the connector shall be measured with an indicator in accordance with ASTM A342/342M.

4.5.6 Seal (see 3.9).

4.5.6.1 Hermetic-sealed connectors (see 3.9.1). The unmated connector shall be tested in accordance with method 112 of MIL-STD-202. The following details and exception shall apply:

a. Method of mounting – In its normal manner in specified mounting hole (see 3.1).
b. Test condition letter – C.
c. Procedure number – I.
d. Leakage rate sensitivity – 10^{-8} cubic centimeters per second.

Source: https://assist.dla.mil -- Downloaded: 2016-11-25T19:47Z
Check the source to verify that this is the current version before use.

4.5.6.2 Pressurized and weatherproof connectors (see 3.9.2). The unmated connector shall be mounted in its normal manner in the specific mounting hole (see 3.1) on a closed container. The specified air pressure (see 3.1) shall be applied to the interior of the container. The exposed portion of the connector under pressure shall be fully immersed in water or alcohol-water mixture and observed for 1 minute minimum.

4.5.7 Insulation resistance (see 3.10). Connectors shall be tested in accordance with procedure EIA 364-21, measured between the center contact and body.

4.5.8 Center contact retention (see 3.11).

4.5.8.1 Axial force. The axial force specified (see 3.1 and 3.11.1) shall be applied to the center contact of an unmated connector. This force shall be applied without shock until the specified force has been reached. The force shall be applied for a minimum period of 5 seconds. After removal of specified force the actual locations of the center contact shall be determined on recessed socket contacts, the tool specified in the appendix will be used (see figure A-11).

4.5.8.2 Torque (see 3.1 and 3.11.2). The torque specified shall be applied to the center contact of an unmated connector for a minimum period of 10 seconds on recessed socket contacts, and the tool specified in the appendix will be used (see figure A-11).

4.5.9 Dielectric withstanding voltage (see 3.12). Connectors shall be tested in accordance with condition 1 of procedure EIA 364-20. The following details shall apply:

a. Special preparation or conditions.

    (1) The maximum relative humidity shall be 50 percent. When facilities are not available at this test condition, connectors shall be tested at room ambient relative humidity. In case of dispute, if the test has been performed at room ambient relative humidity, retesting shall be performed at 50 percent maximum relative humidity.
    (2) The center contact of plug connectors and receptacle connectors shall be positioned in such a manner as to simulate actual assembly conditions.
    (3) Precautions shall be taken to prevent air-gap voltage breakdowns.
    (4) The voltage shall be metered on the high side of the transformer.

b. Magnitude of test voltage (see 3.1). The voltage shall be instantaneously applied.
c. Nature of potential – Alternating current.
d. Points of application of test voltage – Between the center contact and body.

4.5.10 Corrosion (see 3.13). Unmated connectors shall be tested in accordance with procedure EIA 364-26. The following details and exceptions shall apply:

a. Test condition - B.
b. Salt solution – 5 percent.

After exposure, connectors shall be washed, shaken, and lightly brushed as specified in procedure EIA 364-26 and then permitted to dry for 24 hours at 40ºC. Connectors shall then be inspected for evidence of corrosion, pitting, and ease of coupling.

Source: https://assist.dla.mil -- Downloaded: 2016-11-25T19:47Z
Check the source to verify that this is the current version before use.

4.5.11 Voltage standing wave ratio (VSWR) (see 3.14). The VSWR shall be measured in accordance with the following procedure or a method acceptable to the Government. In the event of dispute the method outlined herein shall be used. Diagrams for the swept frequency VSWR system check out and measurement procedures are shown on figure 1.

In the basic measurement setup on figure 1 detector 1 provides a feedback signal to the swept RF source in order to normalize the output signal of detector 2. The frequency-amplitude characteristics of detectors 1 and 2 should be matched within 0.5 dB.

To measure VSWR several sweeps are made with the slotted line probe incrementally positioned over at least a half wave length at the lowest frequency of interest. In this manner an X-Y display is generated whose upper and lower envelope limits represent maximum and minimum amplitudes of the standing wave for each frequency in the test band. A base line may be generated by making a sweep with no input to the measurement channel amplifier. The resultant X-Y display is calibrated according to the characteristics of the measurement channel detector and amplifier, e.g., linear, square law, logarithmic, etc.

The VSWR test system is checked out by successively terminating the slotted line with the elements shown in steps 1, 2, and 3 and sweeping the frequency over the specified test band (see 3.1). In step 1 the system VSWR shall be less than 1.02 + .004 frequency (frequency measured in GHz). In steps 2 and 3 the system VSWR shall be as specified (see 3.1).

The hermaphroditic connector (see figure 1) for the standard precision adapter (item 11) and standard precision test fixture (item 12) shall conform to IEEE 287. The standard test connector interface on precision adapters shall be in accordance with the appropriate connectors in MIL-STD-348.

Refer to Appendix (see A.3.4) for precision adapters and precision test fixture design parameters.

NOTE: Transition end is considered as part of the complete connector and must be included in all tests with the surface launch stripline connector. The enlarged terminal end of the contact ("nail head") is a mechanical feature to attach to the stripline. Its effect is determined by impedance matching techniques incorporated by the user. Thus, contact modification to adapt to a test fixture is specified. All situations specifying transition end is covered by one of the specified test methods. For qualification inspection the connector under test is measured with the slotted line terminated as in step 4. The VSWR shall be as specified (see 3.1).

NOTE: For steps 1, 2, 3, and 4, see figure 1.

Source: https://assist.dla.mil -- Downloaded: 2016-11-25T19:47Z
Check the source to verify that this is the current version before use.

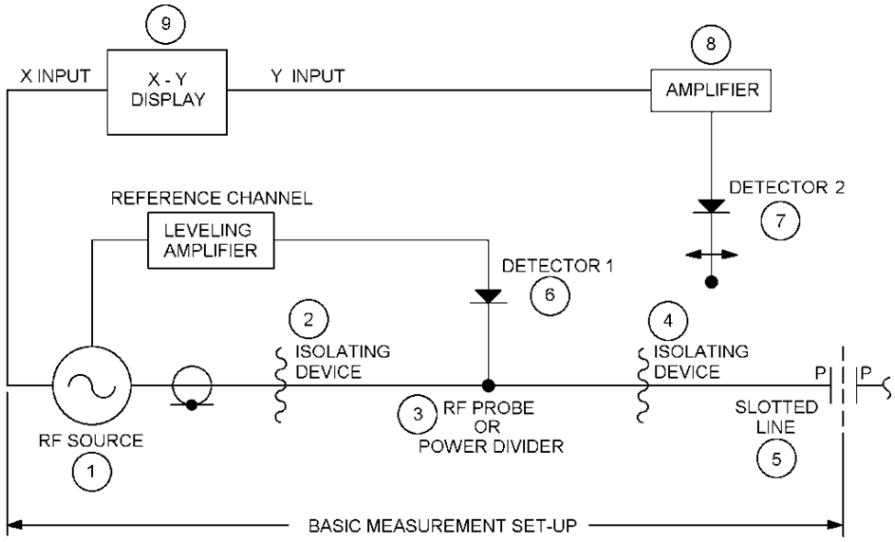

MEASUREMENT CHANNEL

1. SWEPT RF SOURCE
2. ISOLATING DEVICE
3. RF PROBE OR POWER DIVIDER
4. ISOLATING DEVICE
5. SLOTTED LINE WITH PRECISION HERMAPHRODITIC OUTPUT CONNECTOR. RESIDUAL VSWR LESS THAN 1.006 +.003F (F IN GHz)
6. DETECTOR NO. 1
7. DETECTOR NO. 2
8. AMPLIFIER
9. X-Y DISPLAY
10. PRECISION HERMAPHRODITIC TERMINATION
11. STANDARD PRECISION ADAPTER MAXIMUM VSWR (SEE 3.1)

HERMAPHRODITIC INTERFACE — P-S 11p → STANDARD TEST CONNECTOR INTERFACE PER MIL-STD-348; P-S 11j ←

12. STANDARD TEST FIXTURE SET (SEE 3.1 AND APPENDIX)

P F → 12 p

P F ← 12j

13. CONNECTOR UNDER TEST X

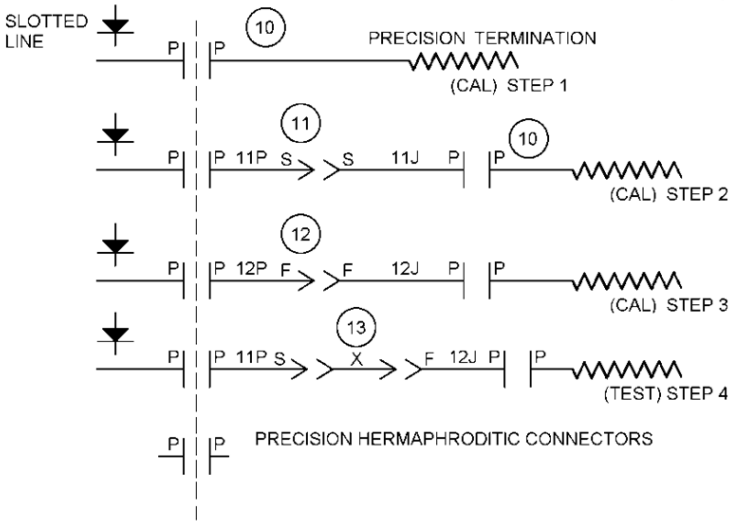

FIGURE 1. Swept frequency VSWR test.

Source: https://assist.dla.mil -- Downloaded: 2016-11-25T19:47Z
Check the source to verify that this is the current version before use.

4.5.12 Radio frequency (RF) transmission loss (see 3.15). The RF transmission loss shall be measured in accordance with the following procedure or a method acceptable to the government. In the event of dispute, the method outlined herein shall be used. Diagrams for the RF transmission loss system check out and measurement procedures are shown on figure 2.

The samples shall be tested as shown on figure 2. This test set up is identical to the VSWR measurement with an addition power detector, isolator and a power amplifier.

The test system is checked out as follows:

a. Check out VSWR per steps 1, 2, and 3 in VSWR test method (see 4.5.11). See 3.1 for test frequency ranges.

Step	
1	Systems VSWR shall be less than 1.02 + .004 frequency (frequency measured in GHz)
2 & 3	Systems VSWR shall be as specified (see 3.1).

b. Check out power transmission per steps:

Step	
4	Plot basic power reference curve on X-Y recorder.
5	Standard test adapter (back to back). The transmission loss shall not be greater than specified (see 3.1) over the basic power reference established in step 4.
6	Standard test fixture set. The transmission loss shall not be greater than specified (see 3.1) over the basic power reference established in step 4.
7	Connector under test. Attach the appropriate precision adapter and standard test fixture half to the connector under test. (Same configuration as step 4 in VSWR (see 4.5.11) test method.) The transmission loss shall be free of any loss spikes greater than 0.3 dB and shall not be greater than specified (see 3.1) over the basic power reference established in step 4.

Source: https://assist.dla.mil -- Downloaded: 2016-11-25T19:47Z
Check the source to verify that this is the current version before use.

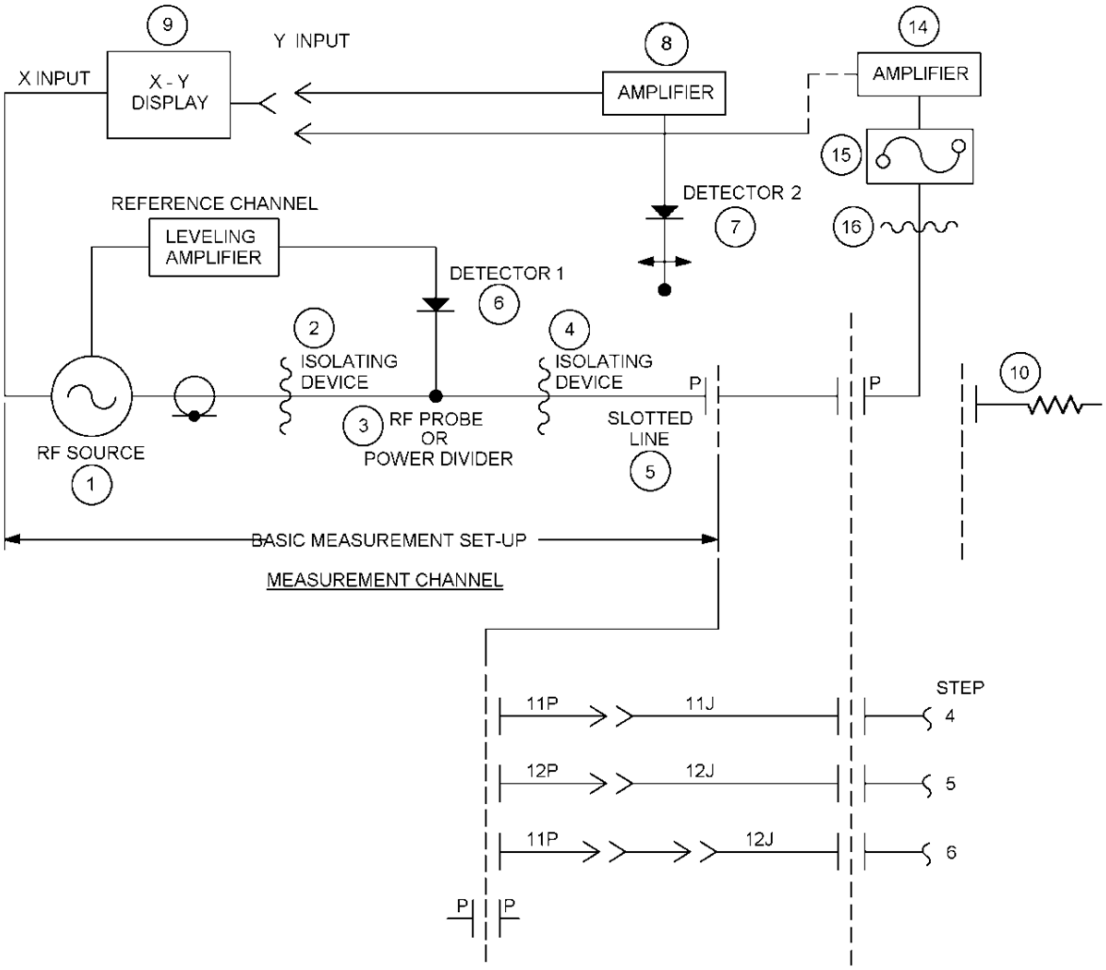

1. SWEPT RF SOURCE
2. ISOLATING DEVICE
3. RF PROBE OR POWER DIVIDER
4. ISOLATING DEVICE
5. SLOTTED LINE WITH PRECISION HERMAPHRODITIC OUTPUT CONNECTOR. RESIDUAL VSWR LESS THAN 1.006 + .003F (F IN GHz)
6. DETECTOR NO. 1
7. DETECTOR NO. 2
8. AMPLIFIER
9. X-Y DISPLAY
10. PRECISION HERMAPHRODITIC CONNECTORS
11. STANDARD PRECISION ADAPTER

HERMAPHRODITIC INTERFACE — P-S 11p / P-S 11j — STANDARD TEST CONNECTOR INTERFACE PER MIL-STD-348

12. STANDARD TEST FIXTURE SET
    P F 12 p
    P F 12j
13. CONNECTOR UNDER TEST — X
14. AMPLIFIER (POWER)
15. POWER DETECTOR
16. ISOLATING DEVICE

FIGURE 2. RF transmission loss test.

Source: https://assist.dla.mil -- Downloaded: 2016-11-25T19:47Z
Check the source to verify that this is the current version before use.

4.5.13 Radio frequency (RF) leakage (see 3.16). The connector under test shall be connected to a mating connector and mounted to an appropriate test fixture (see 3.1). The assembly shall be as shown on figure 3 and tested as shown on figure 4 (the procedure for determining the dimensions of the cavity in figure 4 may be found in paragraph A.4.1 of the appendix). This test setup between 500 MHz and 7.5 GHz shall have a dynamic range from –20 dBm to better than –100 dBm or if not within this power range, a difference of at least 90 dB. If –20dBm is the maximum power range, using a +20 dBm RF source with 30 dB attenuation including the isolator pad, an additional 30 dB range can be obtained.

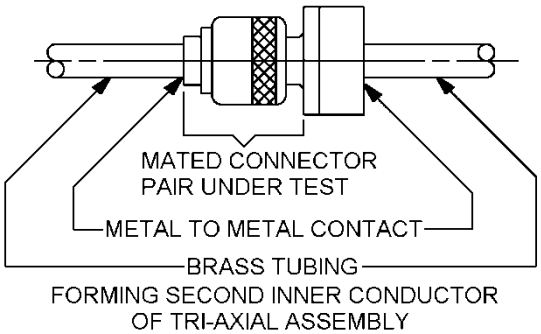

FIGURE 3. Connector assembly for RF leakage test.

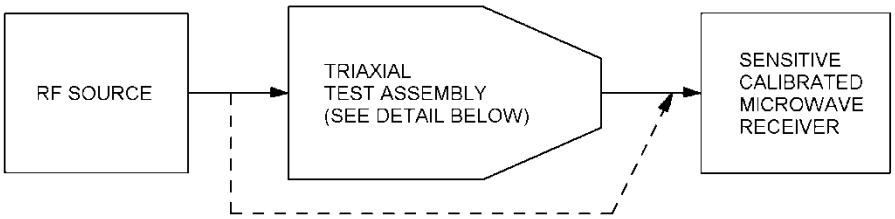

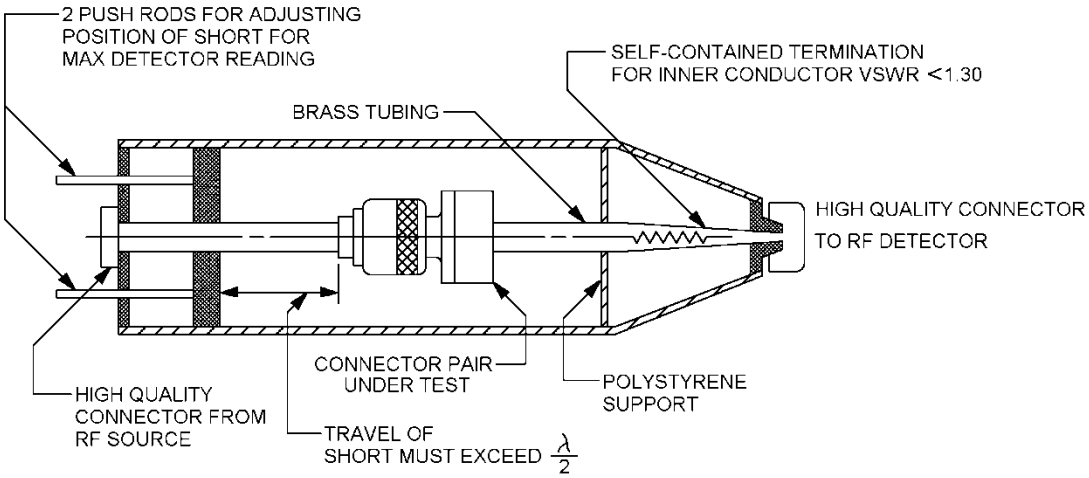

FIGURE 3. Method of RF leakage measurements.

Source: https://assist.dla.mil -- Downloaded: 2016-11-25T19:47Z
Check the source to verify that this is the current version before use.

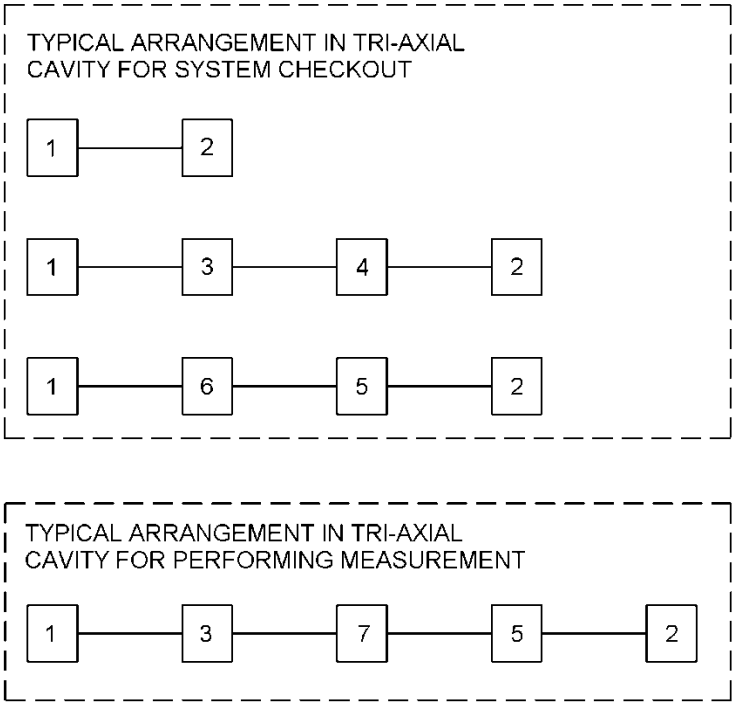

ITEM.

1. Cable connector with hermaphroditic output fitting.
2. Cable connector with hermaphroditic input fitting compatible with output fitting of item 1.
3. Standard test connector with hermaphroditic input fitting compatible with output fitting of item 1, and output interface compatible with input interface of adapter to be tested.
4. Standard test connector of opposite sex to item 3, and hermaphroditic output fitting compatible with input fitting of item 2.
5. Standard test connector with hermaphroditic output fitting compatible with input fitting of item 2, and input interface compatible with output interface of adapter to be tested.
6. Standard test connector of opposite sex to item 5 and hermaphroditic input fitting compatible with output fitting of item 1.
7. Two identical connectors mated with a transition test pin in accordance with figure 5.

FIGURE 4. Typical arrangements in triaxial cavity.

Source: https://assist.dla.mil -- Downloaded: 2016-11-25T19:47Z
Check the source to verify that this is the current version before use.

4.5.14 Connector durability (see 3.17). Each connector under test shall be mated with a typical production connector per this specification or same series of MIL-PRF-39012. This test also applies to transition pins if applicable. The connector and transition pin shall be subject to the number of cycles of mating and unmating specified (see 3.1). The connector and its mating part and the transition pin if applicable shall be completely engaged and completely disengaged each cycle. Lubrication of the threads or rotational parts shall not be employed for this test unless specified (see 3.1). It is permissible to shake or blow debris from the threads or interface surfaces at intervals of not less than 50 cycles. Solvents or tools shall not be used for cleaning.

4.5.15 Contact resistance (see 3.18). All contact resistance tests shall be conducted with the apparatus shown on figure 6. Circuit adjustments and the measurement procedures for all contact resistance tests shall be in accordance with 4.5.15.1. The contact resistance to be measured are:

a. The contact resistance between the outer conductors of the connector under test and a simulated mounting surface (see 3.1).

b. The contact resistance between the outer conductors of the connector under test and a mating connector (the coupling nut must be removed for this measurement).

c. The contact resistance between the inner conductors of the connector under test and a mating connector. This test will include a mated transition pin if applicable.

4.5.15.1 General procedure. The apparatus shall be assembled as shown on figure 6. The contacts, C1 – C2, shown on figure 6, represent the mating contacts upon which millivolt drop tests are to be conducted.

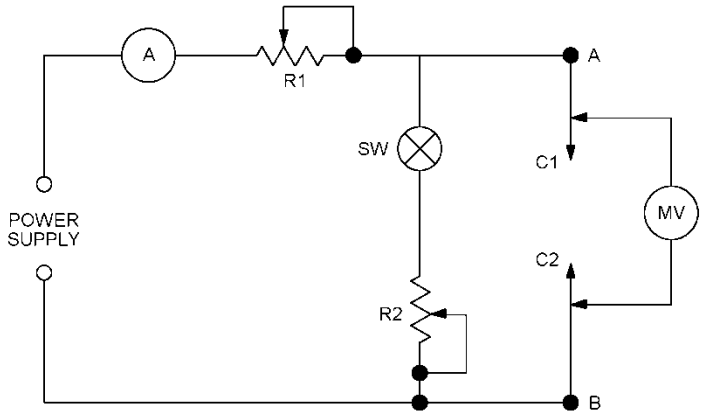

NOTES:
a. Remove contacts C1 – C2 from the measuring circuit.
b. Close switch SW.
c. Adjust R2 for a millivoltmeter (mVm) reading of 50 millivolts.
d. Connect contacts C1 – C2 to the measuring circuit and mate.
e. Check to see that mVm drops significantly prior to opening switch in (f).
f. Open switch SW.
g. Adjust R1 for circuit current (A) of 1 ampere.
h. Measure the millivolt drop across contacts C1 – C2 and call this “e”.
i. Compute contact resistance. Contact resistance (milliohms) = e (millivolts) ÷ 1 ampere.

FIGURE 5. Diagram for contact resistance.

Source: https://assist.dla.mil -- Downloaded: 2016-11-25T19:47Z
Check the source to verify that this is the current version before use.

4.5.16 Thermal shock (see 3.19). Connectors shall be subjected to method 107 of MIL-STD-202. The following details shall apply:

a. Test condition letter (see 3.1).

b. The contact resistance tests on the center contact shall be performed before and after the thermal shock test and then inspected for mechanical damage (see 3.1).

c. Connectors shall meet the requirements for VSWR (see 3.14).

4.5.17 Moisture resistance (see 3.20). The sample shall be mounted on the appropriate test fixture and shall be subjected to method 106 of MIL-STD-202. The following exceptions and conditions shall apply:

a. No initial measurements.

b. No load.

c. Measurements shall be made at high humidity when specified (see 3.1).

d. The connector shall withstand the dielectric withstanding voltage specified (see 4.5.9) after the drying period.

4.5.18 Radio frequency (RF) high potential withstanding voltage (see 3.21). The test sample shall be mated to a cabled connector in accordance with MIL-PRF-39012 (the cable shall be approximately 2 inches long). This assembly shall then be inserted into the high impedance circuit as shown on figure 7, or equivalent, and instantaneously subjected to the RF voltage and frequency specified (see 3.1) between the center contact and body of the connectors. The duration of the test shall be 1 minute. The RF voltage source shall be frequency stabilized and shall have a sine wave output with minimum harmonic content. Means shall be provided to indicate disruptive discharge.

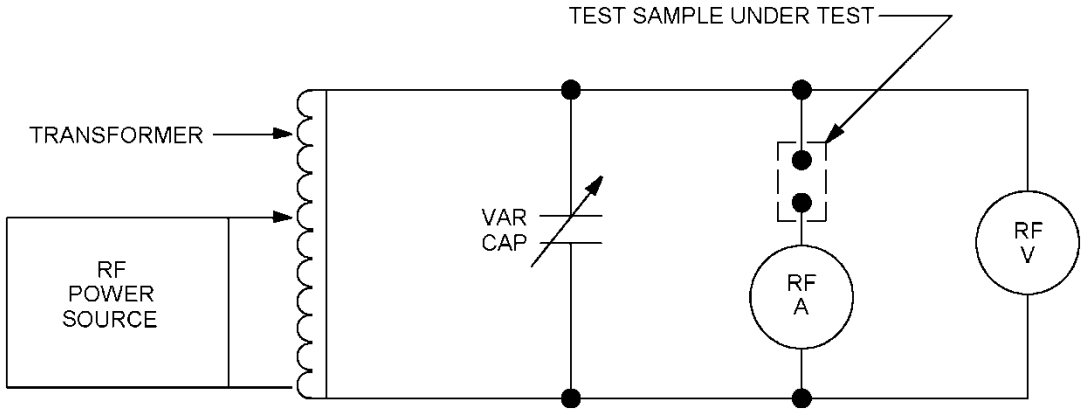

FIGURE 6. Circuit diagram for RF high potential withstanding voltage.

Source: https://assist.dla.mil -- Downloaded: 2016-11-25T19:47Z
Check the source to verify that this is the current version before use.

4.5.19 Coupling mechanism retention force (see 3.22). The connector body and coupling mechanism shall be respectively secured to the lower and upper jaws of a tensile tester in an appropriate manner. A tensile load shall be applied at a rate of approximately 100 pounds/minute up to the force as specified and held at that value for 1 minute (see 3.1). During the 1 minute of steadily applied force, the coupling mechanism shall be rotated with respect to the connector body, two full revolutions in each direction.

5. PACKAGING

5.1 Packaging. For acquisition purposes, the packaging requirements shall be as specified in the contract or order (see 6.2). When packaging of materiel is to be performed by DoD or in-house contractor personnel, these personnel need to contact the responsible packaging activity to ascertain packaging requirements. Packaging requirements are maintained by the Inventory Control Point's packaging activities within the Military Service or Defense Agency, or within the military service's system commands. Packaging data retrieval is available from the managing Military Department's or Defense Agency's automated packaging files, CD-ROM products, or by contacting the responsible packaging activity.

6. NOTES

(This section contains information of a general and explanatory nature that may be helpful, but is not mandatory.)

6.1 Intended use. The connectors and fittings covered by this specification are intended for use in radio frequency application up to the frequency specified (see 3.1). These connectors are not recommended for field replacement unless the final end product is retested.

6.2 Acquisition requirements. Acquisition documents should specify the following:

a. Title, number and date of this specification.
b. Title, number and date of the applicable detail specification sheet.
c. The complete part number of the connector or fitting ordered.
d. Specific finish when required (see 3.3.1).
e. Assembly instructions.
f. List of special tools.
g. Pictorial presentation of subassemblies and loose piece parts.
h. Sufficient pertinent dimensions for verification of parts.
i. Packaging requirements (see 5.1).

6.3 Customary test requirements. Some customary test requirements normally applied to RF connectors have been omitted because the end item circuitry determines product integrity. These requirements are to be imposed on the end item. Typical requirements not specified are shock, vibration, and corona.

6.4 Qualification. With respect to products requiring qualification, awards will be made only for products which are, at the time of award of contract, qualified for inclusion in Qualified Products List (QPL-83517) whether or not such products have actually been so listed by that date. The attention of the contractors is called to these requirements, and manufacturers are urged to arrange to have the products that they propose to offer to the Federal Government tested for qualification in order that they may be eligible to be awarded contracts or orders for the products covered by this specification. Information pertaining to qualification of products may be obtained from DLA Land and Maritime-VQP, P.O. Box 3990, Columbus, Ohio 43218-3990.

Source: https://assist.dla.mil -- Downloaded: 2016-11-25T19:47Z
Check the source to verify that this is the current version before use.

6.5 Definitions.

6.5.1 Hermetic-sealed connector. A connector which is intended to mount on a surface and provide a specific maximum leak rate both internally through the connector, and externally at the mounting surface.

6.5.2 Pressurized connector. A connector which is intended to mount on a surface and provide seals, both internally through the connector and externally at the mounting surface. The sealing requirement may be less severe than for the hermetic-sealed connector.

6.5.3 Weatherproof connector. A connector which is intended to mount on a surface and provide a seal to that surface.

6.5.4 Coaxial transmission line. A transmission system in which electromagnetic waves are transmitted through a dielectric* medium bounded by two coaxial cylinders (see figure 8). The cylinders typically are identified as inner and outer conductors.

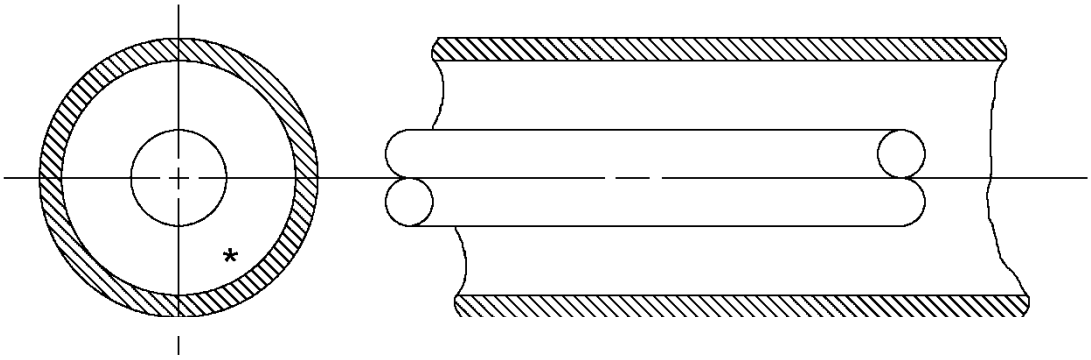

FIGURE 7. Coaxial.

6.5.5 Strip transmission line. A transmission system in which electromagnetic waves are transmitted through a dielectric* medium. The inner conductor is bounded by two parallel outer conductors (see figure 9).

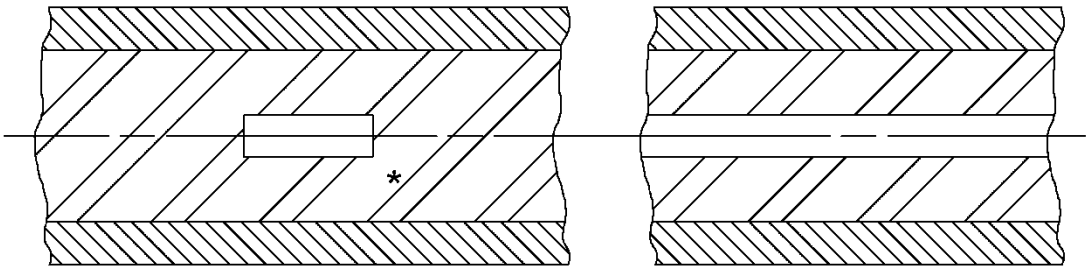

FIGURE 8. Strip.

6.5.6 Microstrip transmission line. A transmission system in which electromagnetic waves are transmitted through a dielectric* medium. The strip inner conductor is typically bounded to the dielectric medium which is bounded to an outer plate conductor (see figure 10).

Source: https://assist.dla.mil -- Downloaded: 2016-11-25T19:47Z
Check the source to verify that this is the current version before use.

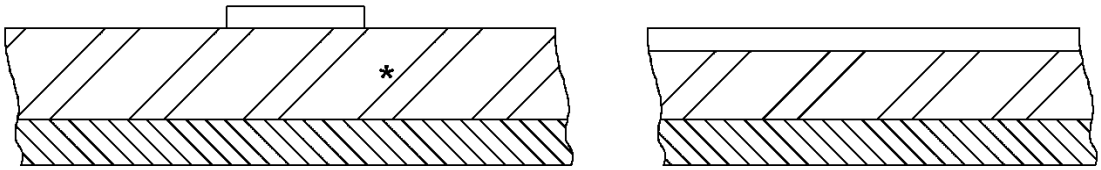

FIGURE 9. Microstrip.

6.5.7 Copper alloy. Copper mixed with a more valuable metal to give durability or some other desired quality. For connectors acquired to this specification and materials indicated as copper alloy (see 1.2.2). The mating connector body is to be copper beryllium; however, the outer external parts are allowed to be brass.

6.6 Subject term (key word) listing.

Brass
Copper beryllium
Nickel
Phosphor bronze

6.7 Environmentally preferable material. Environmentally preferable materials should be used to the maximum extent possible to meet the requirements of this specification. Table VIII lists the Environmental Protection Agency (EPA) top seventeen hazardous materials targeted for major usage reduction. Use of these materials should be minimized or eliminated unless needed to meet the requirements specified herein (see section 3).

TABLE VIII. EPA top seventeen hazardous materials.

Benzene	Dichloromethane	Tetrachloroethylene
Cadmium and Compounds	Lead and Compounds	Toluene
Carbon Tetrachloride	Mercury and Compounds	1,1,1-Trichoroethane
Chloroform	Methyl Ethyl Ketone	Trichloroethylene
Chromium	Methyl Isobutyl Ketone	Xylenes
Cyanide and Compounds	Nickel and Compounds	

6.8 Guidance on use of alternative parts with less hazardous or non-hazardous materials. This specification provides for a number of alternative plating materials via the PIN. Users should select the PIN with the least hazardous material that meets the form, fit and function requirements of their application.

6.9 Changes from previous issue. Marginal notations are not used in this revision to identify changes with respect to the previous issue due to the extent of the changes.

Source: https://assist.dla.mil -- Downloaded: 2016-11-25T19:47Z
Check the source to verify that this is the current version before use.

PROCEDURE FOR MEASUREMENTS OF VOLTAGE STANDING WAVE RATIO, RADIO FREQUENCY LEAKAGE AND RADIO FREQUENCY TRANSMISSION LOSS

A.1 SCOPE

A.1.1 Scope. This appendix is a mandatory part of this specification. The information contained herein is intended for compliance. This appendix is to provide additional information to the user of this specification in performing the VSWR, RF leakage and RF transmission loss measurements.

A.2 APPLICABLE DOCUMENTS

This section is not applicable to this appendix.

A.3 PROCEDURE FOR VOLTAGE STANDING WAVE RATIO (VSWR)

A.3.1 VSWR test (see 4.5.11). The intent of the VSWR measurement is to assure connector integrity at its mating connector interface and typical mechanical mounting or component attaching surfaces. The test fixtures will incorporate a low mismatch design which will continue the coaxial structure to a precision hermaphroditic connector. The test fixtures are not intended to represent low VSWR launches to strip, microstrip or other transmission lines.

A.3.2 Test connector. The standard test connector interface shall be in accordance with MIL-STD-348.

A.3.3 Standard precision adapters. The standard precision adapters shall be of design compatible with appropriate dimensions for the hermaphroditic connector, in accordance with IEEE 287. The design of mating pair of adapters shall be electrically and mechanically symmetrical. The electrical phase length shall be equal where possible for plug and jack adapters. On designs where an electrical reference cannot be defined with a mechanical reference, a hypothetical plane shall be defined which test connectors must stand alone or as a proper design and not compensate for deficiencies of the mating connector. The above requirement shall be met in order to assure that the calibration data, step 2 on figure 1, is within required accuracy to quality item 11.

The VSWR as specified for item 11 is for one adapter, but the VSWR value is determined by taking the square root of the value of a matched pair. The above computation can be considered valid when adapter symmetry exists.

By definition, the above method shall be used to establish the adapter acceptance value.

This test method is not to be interpreted as a method to measure absolute VSWR values for adapters.

A.3.4 Standard precision test fixtures. The standard precision test fixtures shall be of design compatible with appropriate dimensions for the hermaphroditic connector in accordance with IEEE 287. The design of the mating test fixture set shall be electrically and mechanically symmetrical. The electrical phase length shall be equal where possible. On designs where an electrical reference cannot be defined with a mechanical reference, a hypothetical plane shall be defined which bisects the mated set.

The VSWR as specified for item 12 is for one half of the fixture set, but the VSWR value is determined by taking the square root of the value of the set. By definition, the above method shall be used to establish the test fixture acceptance value. This test method is not to be interpreted as a method to measure absolute VSWR value for the test fixture.
Test fixtures and fixture extension where required are illustrated in the following figures.

Source: https://assist.dla.mil -- Downloaded: 2016-11-25T19:47Z
Check the source to verify that this is the current version before use.

a. FIGURE A-2. Calibration and test orientation for a tab terminal.
b. FIGURE A-3. Calibration and test orientation for .010 diameter and extended terminal.
c. FIGURE A-4. Calibration and test orientation for .050 diameter and slotted terminal.
d. FIGURE A-5. Calibration test fixture 12p on figures 1 and 2.
e. FIGURE A-6. Final test fixture 12j on figures 1 and 2.
f. FIGURE A-7. Accessory alignment gauge.
g. FIGURE A-8. Final test fixture and device under test 12j and X, on figures 1 and 2.
h. FIGURE A-9 Configuration of final test fixture and device under test with extension.
i. FIGURE A-10. Contact resistance simulated mounting surface for SMA flange mount connectors.
j. FIGURE A-11. SMA test tool for center contact retention.

A.3.5 Test fixtures.

A.4 PROCEDURE FOR RF LEAKAGE

A.4.1 RF leakage (see 4.5.13). The measurement of the leakage from connectors is performed by collecting the leakage energy in a coaxial system surrounding the leakage source. An outline of the instrumentation is shown on figure 4. The device from which leakage is to be measured is incorporated in a uniform transmission line which is terminated in a matched load. The matched termination simplifies both the measurement procedure and data reduction. This complete coaxial system is embodied within a cylinder which forms, externally, a second coaxial system. The second coaxial system is terminated at one end in an adjustable short-circulating plunger and at the other in a tapered transition terminated in a matched detector.

For direct leakage measurements, the adjustable short circuit serves several purposes.

The short-circuit position is adjusted to assure that an adequately low impedance appears behind the equivalent leakage generator. A matched termination can be substituted, but the resulting 6dB loss cannot be tolerated in some cases. In addition, if the leakage source is directional, as it indeed is for connectors with multiple leakage, it is possible for the leakage to be directed to this termination at some frequencies and not collected by the detector. For surface transfer-impedance measurements on connectors with leakage from more than one point in the connector, a matched termination is desirable in order to simplify the transformation of the measured data to absolute transfer impedance data. This is not needed to make relative comparisons in this test.

The equivalent leakage generator, in general, can have field components in the radial, axial, and circumferential* directions. Furthermore, these components are not necessarily circularly symmetric. Locally, TE, TM, and TEM modes can all exist, and in fact, for complete leakage measurements, the detector should couple to all but the measurement is more complex in this case. The excitation of the outer coaxial line, however, is believed to be principally TEM, since the currents in the internal line are predominantly axial and symmetric. It is however, possible to have a symmetrical leakage current which can generate the above mentioned modes. It is recommended that all measurements be made below the frequency that the higher order modes can propagate in the outer coaxial line.

The characteristic impedance of the outer coaxial line of the tri-axial system, which is formed with the inner conductor, should be matched to the detector. 50 ohm coaxial circuits are generally desired for convenience.

The leakage power ratio is defined here as the ratio of the power detected to a 50 ohm detector at the output of the tri-axial unit to the power flowing through the internal 50 ohm connector or cable system. It is basically the attenuation through the tri-axial system. This definition appears arbitrary in the sense that

Source: https://assist.dla.mil -- Downloaded: 2016-11-25T19:47Z
Check the source to verify that this is the current version before use.

50 ohms is comparatively low, the voltage at the detector is essentially the open circuit leakage voltage. The ratio of the input voltage to the leaky device to this output voltage is an absolute leakage quantity, as is the measured power ratio, which is identically equal to the square of this voltage ratio.

The surface transfer impedance is obtained from this ratio as follows:

The surface transfer impedance is:

$$Z_{21} = \frac{e_2}{i_1}$$

Where i_1 = Current flowing in internal line.
e_2 = Equivalent leakage voltage in extended line.

*The circumferential E-field component is not usually present in axially symmetric components.

In the connector leakage case, considering the equivalent leakage generator to be e_2 with an extremely low source impedance, this voltage e_2 appears at detector terminals, and the adjustable short-circuit assures this. For a 50 ohm transmission line system, the input power is:

$$50\,(i_1)^2$$

The measured output power is:

$$\frac{(e_2)^2}{50} \qquad (1)$$

The measured power ratio A^2 is therefore,

$$A^2 = \frac{\dfrac{(e_2)^2}{50}}{50\,(i_1)^2} = \frac{(e_2)^2}{50^2\,(i_1)^2} \qquad (2)$$

Substituting and by definition,

$$Z_{21} = \frac{e_2}{i_1} = 50A \qquad (3)$$

The tri-axial system was set up principally to assess the relative leakage.

A.4.2 Measurement procedure. In measuring the leakage power ratio, A^2, basically a substitution technique is employed. A matched detector system is installed at the output connector of the tri-axial unit, and the unit is driven as shown on figure 4. In this set-up, the short circuit is adjusted to produce a

Source: https://assist.dla.mil -- Downloaded: 2016-11-25T19:47Z
Check the source to verify that this is the current version before use.

maximum indication at the detector. The detector is then connected directly to the source and the change of attenuation required to yield the initial detector level, is measured.

The sensitivity of this system is obviously limited by the sensitivity of the detector and the power available. A sensitive parallel IF substitution system is employed, and for the low leakage configurations about 100 milliwatts of power is required.

The principal sources of error are attenuator errors and mismatch at the receiver (mixer) input. For connector measurements, the error due to mismatch is directly proportional to VSWR since the equivalent leakage source impedance is small. The indicated leakage power can vary between the extremes. P x VSWR to P + VSWR, where P is the power that would be delivered to a matched system. VSWR of 2 will produce $\pm$ 3 dB error therefore.

In advance of installing the inner coaxial system into the outer of the tri-axial system, the inner system may be excited, and the immediate vicinity of the leakage point or associated connector and attachment points probed with a small loop or dipole to establish how critical the mating, the connector and joints are.

A.5 PROCEDURE FOR RF TRANSMISSION LOSS

A.5.1 RF transmission loss. The RF transmission loss is defined as the ratio of the power delivered from an energy source to a load (power measuring instrument) in the absence of the device, to the power delivered to the load with the device inserted between the source and the load (see figure A-1). This ratio is typically represented in dB.

$$\text{dB loss} = 10 \log \frac{P_1}{P_2}$$

P_1 power delivered to load without device inserted
P_2 power delivered to load with device inserted

The purpose of this test is to assure the device, when mounted and mated in accordance with typical intended design, will function over the specified frequency range without adverse transmission losses which can be caused by high resistance, conductive shunt paths, mechanical resonant cavities and higher order mode resonances.

Source: https://assist.dla.mil -- Downloaded: 2016-11-25T19:47Z
Check the source to verify that this is the current version before use.

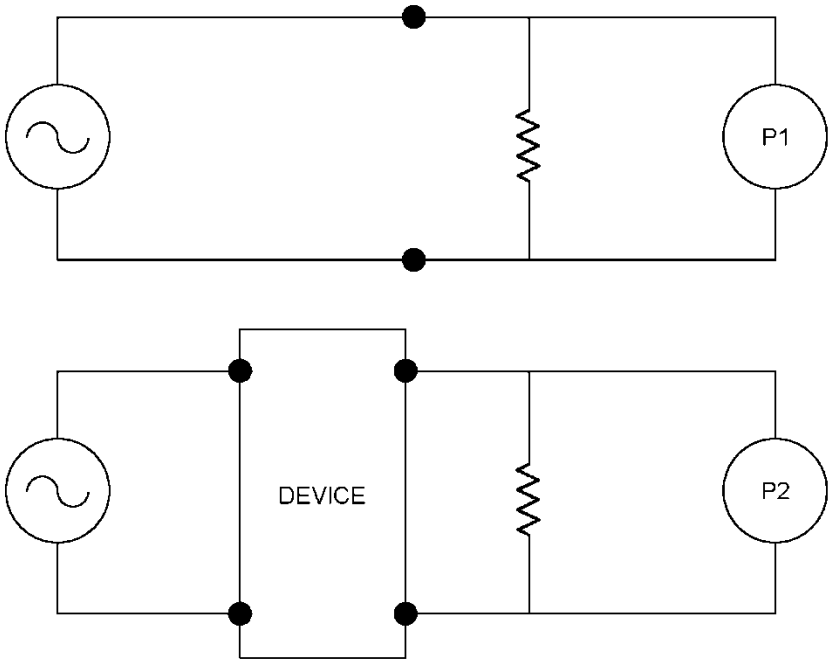

FIGURE A-1. RF transmission loss.

A.5.2 Test fixtures. Figure A-6, final tab test fixture, item 12j on figures 1 and 2, is the fixture to be used for the final connector test. Figure A-5, calibration test fixture, item 12p on figures 1 and 2, is the calibration half of the test fixture.

The test fixture housing has a rotation feature (see section BB on figure A-6), to align the slotted contact to accept the tabbed terminal. An accessory alignment gage is illustrated (see figure A-7). The test fixture has two tapered spring loaded pins to assist in the alignment of the tab terminal to the slotted test fixture contact. In a plane 90° away, two threaded holes are located for securing the connector under test to the fixture. For two hole flanged housing, the fixture must be rotated 90° to accept tab orientation. An accessory clamp must be used to secure the connector.

The slotted test contact (see figure A-7) will also have a small center hole to accept an appropriate pin of the calibration fixture. The calibration fixture will have a minimum of three precision gage located dowels which insert into appropriate holes in the test fixture.

Source: https://assist.dla.mil -- Downloaded: 2016-11-25T19:47Z
Check the source to verify that this is the current version before use.

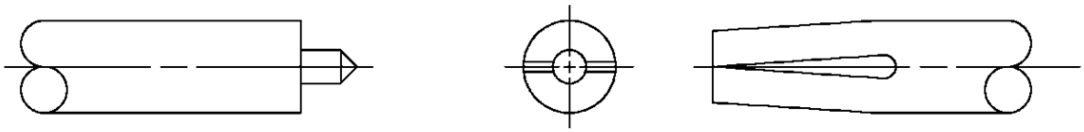

FIXTURE CONTACTS

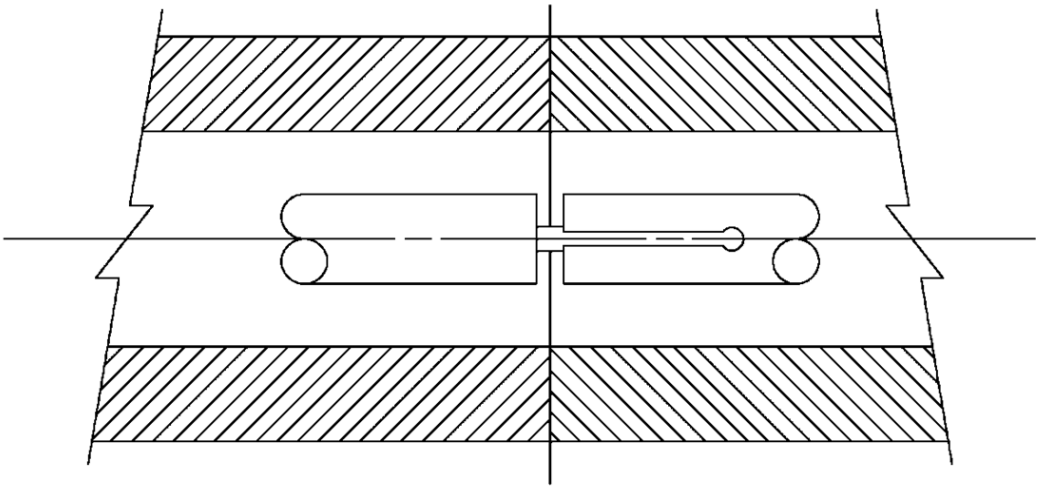

FIXTURE CALIBRATION

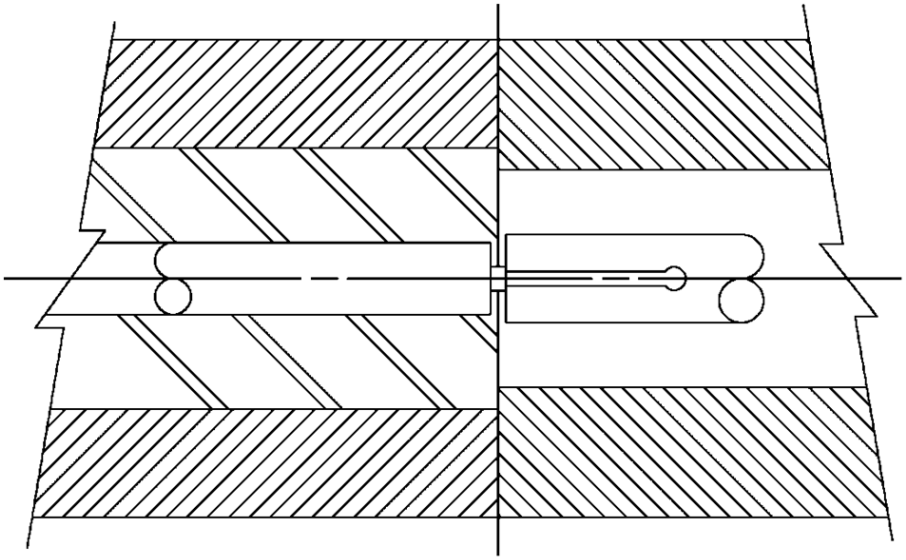

CONNECTOR UNDER TEST TEST FIXTURE

FIGURE A-2. Calibration and test orientation for a tab terminal.

Source: https://assist.dla.mil -- Downloaded: 2016-11-25T19:47Z
Check the source to verify that this is the current version before use.

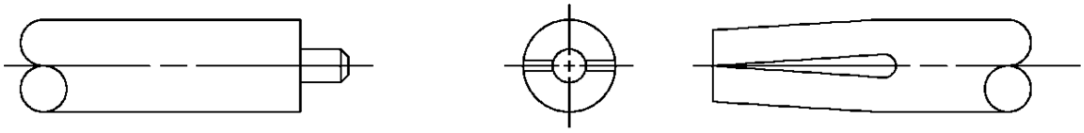

FIXTURE CONTACTS

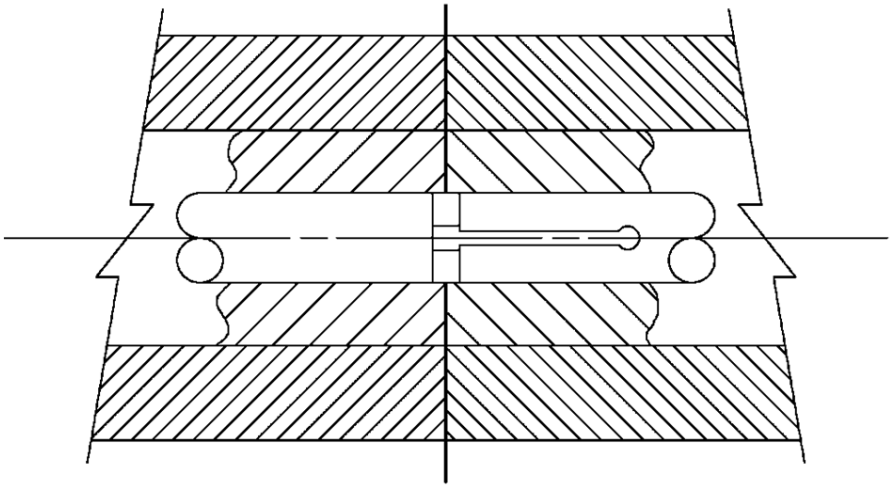

FIXTURE CALIBRATION

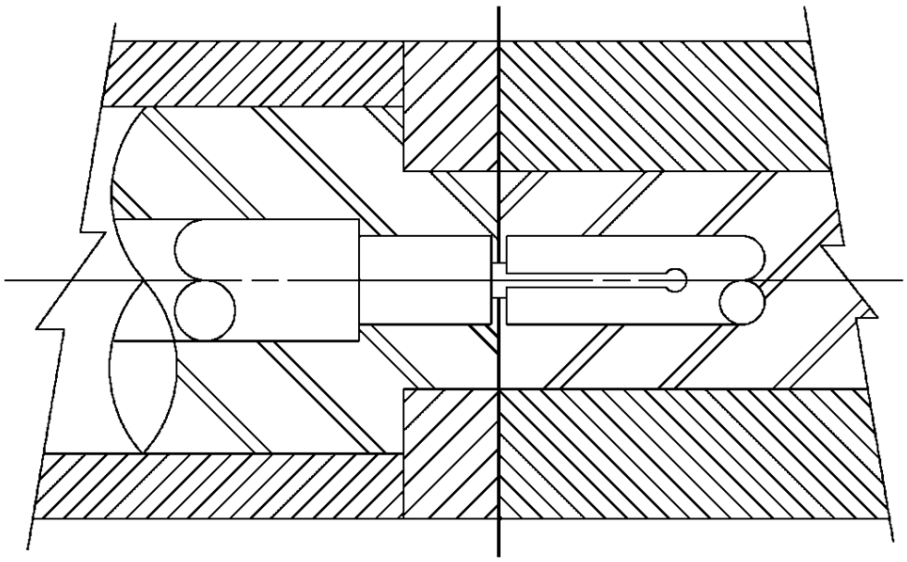

CONNECTOR UNDER TEST TEST FIXTURE

FIGURE A-3. Calibration and test orientation for .010 diameter and extended terminal.

Source: https://assist.dla.mil -- Downloaded: 2016-11-25T19:47Z
Check the source to verify that this is the current version before use.

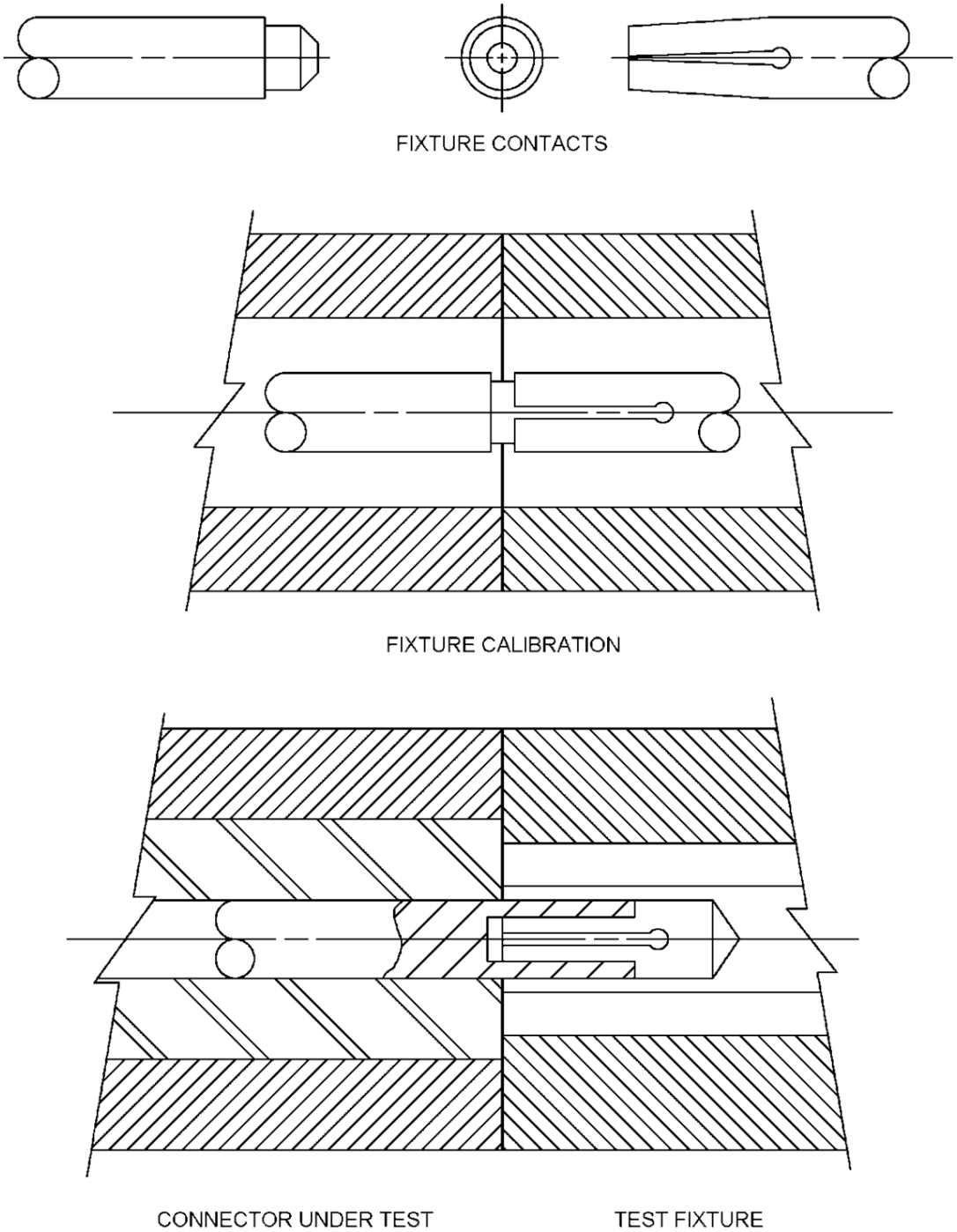

FIGURE A-4. Calibration and test orientation for .050 diameter and slotted terminal.

Source: https://assist.dla.mil -- Downloaded: 2016-11-25T19:47Z
Check the source to verify that this is the current version before use.

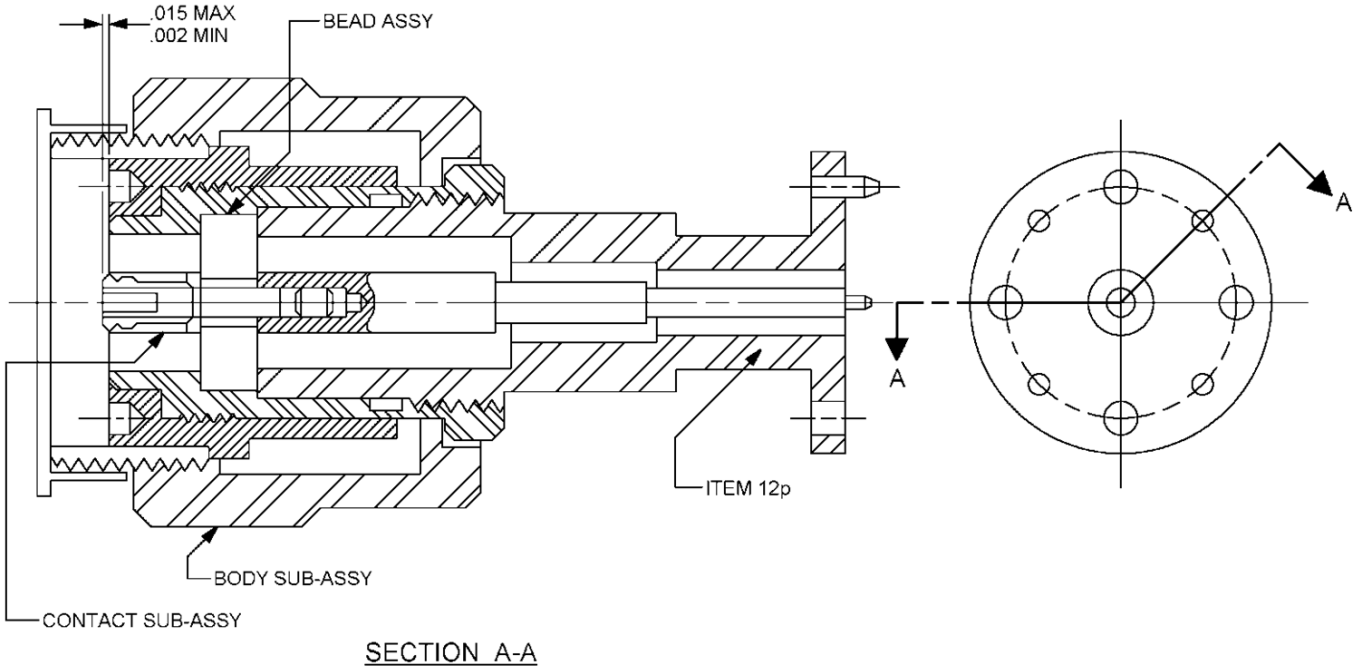

FIGURE A-5. Calibration test fixture, 12p on figures 1 and 2.

Source: https://assist.dla.mil -- Downloaded: 2016-11-25T19:47Z
Check the source to verify that this is the current version before use.

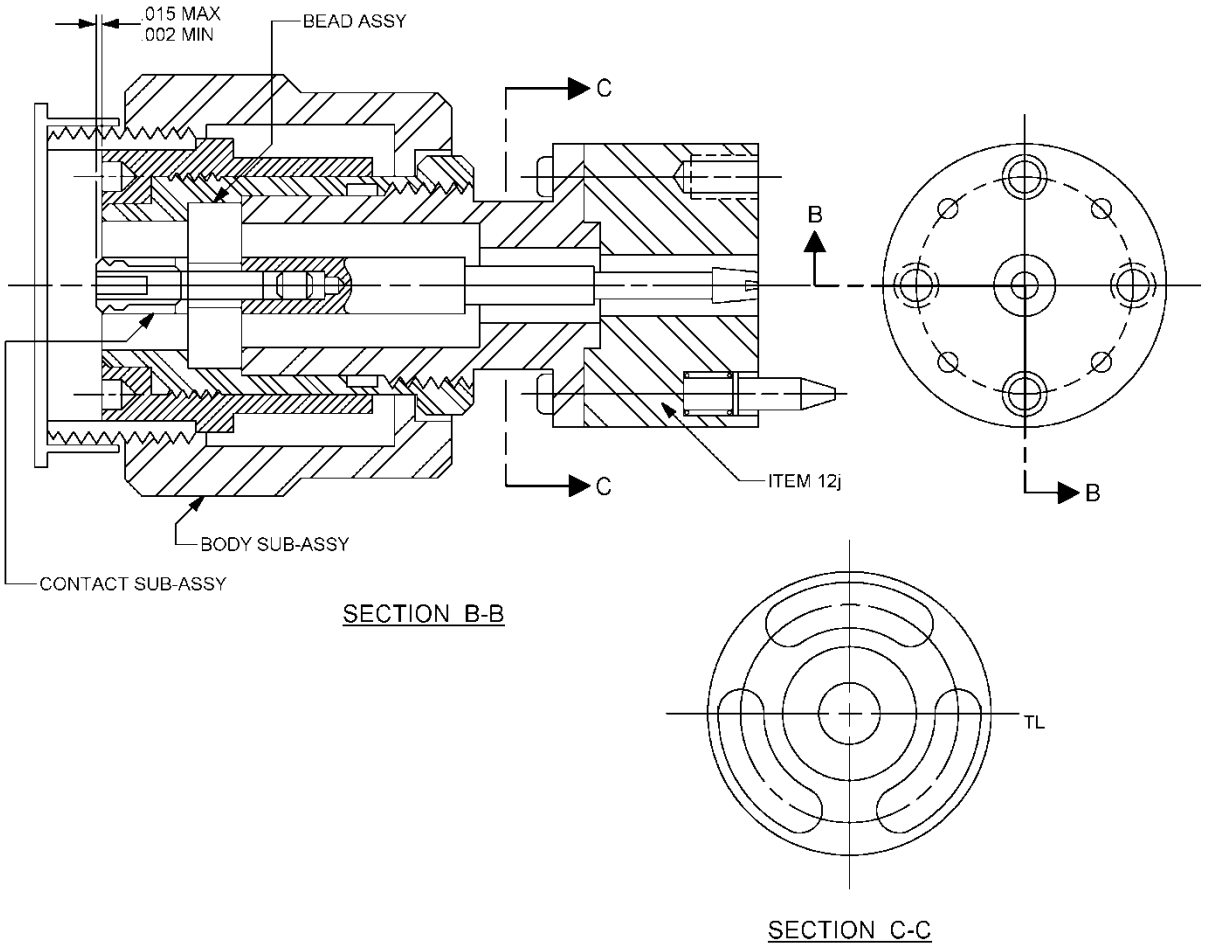

FIGURE A-6. Final test fixture 12j on figures 1 and 2.

Source: https://assist.dla.mil -- Downloaded: 2016-11-25T19:47Z
Check the source to verify that this is the current version before use.

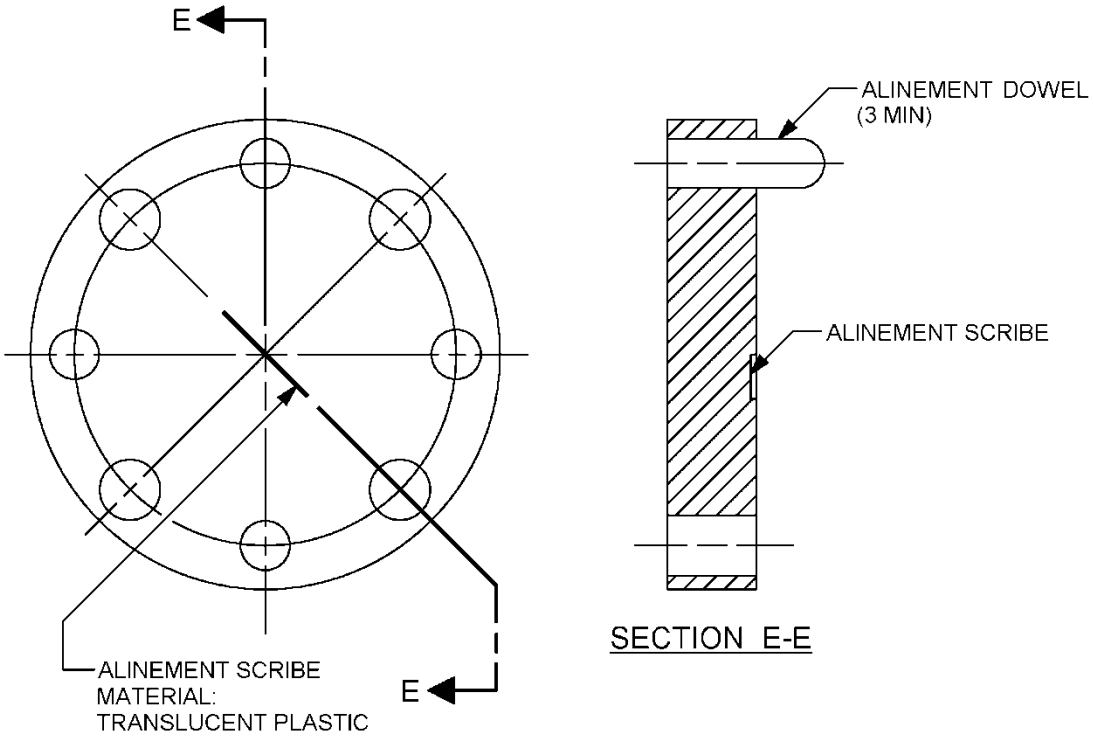

FIGURE A-7. Accessory alignment gage.

Source: https://assist.dla.mil -- Downloaded: 2016-11-25T19:47Z
Check the source to verify that this is the current version before use.

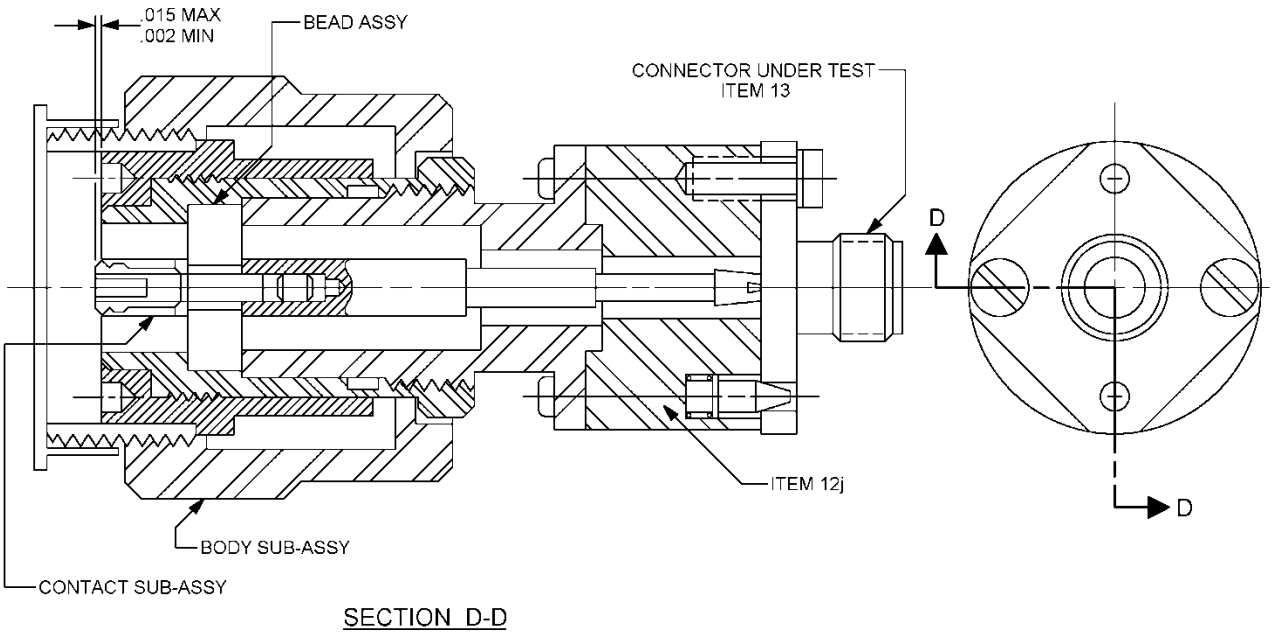

FIGURE A-8. Final test fixture and device under test, 12j and x, on figures 1 and 2.

Source: https://assist.dla.mil -- Downloaded: 2016-11-25T19:47Z
Check the source to verify that this is the current version before use.

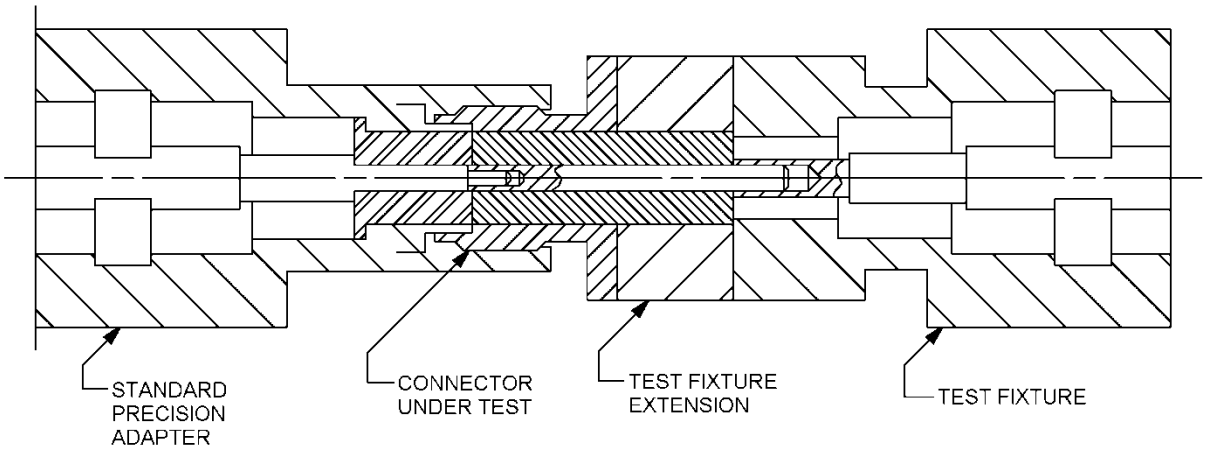

FIGURE A-9. Configuration of final test fixture and device under test with extension.

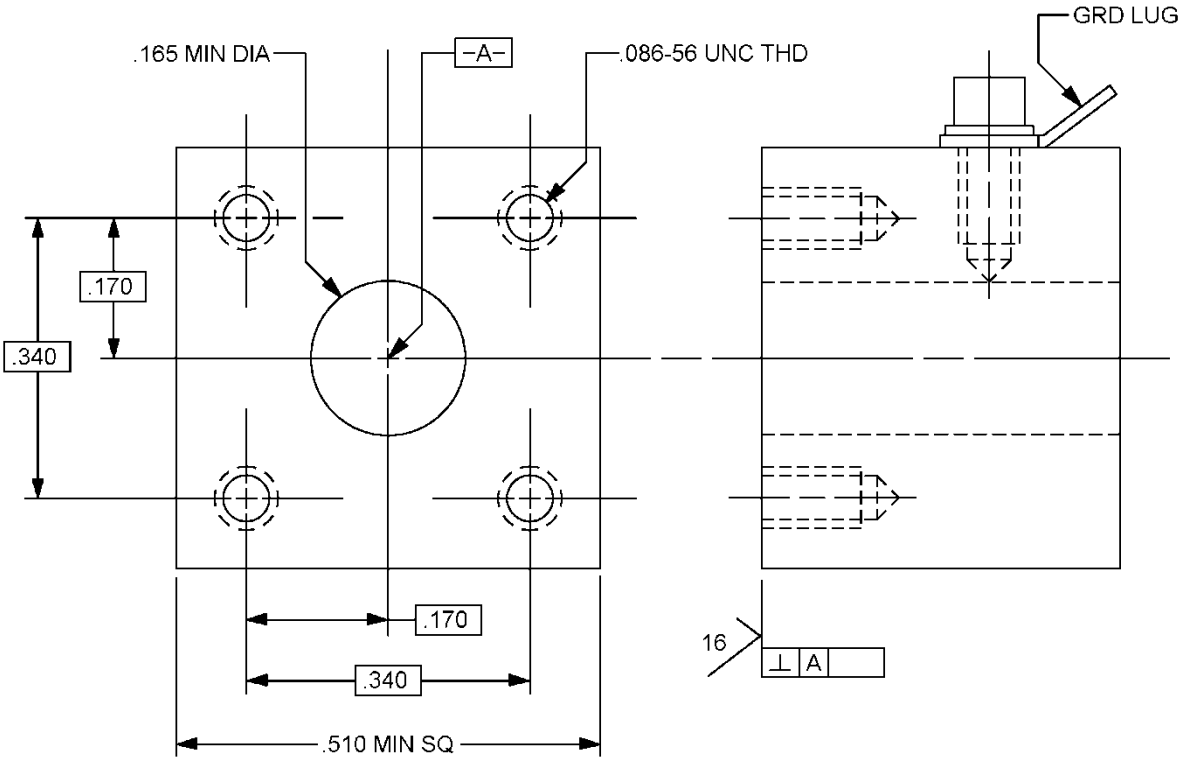

FIGURE A-10. Contact resistance simulated mounting surface for SMA flange mount connectors (for test see 4.5.15a).

Source: https://assist.dla.mil -- Downloaded: 2016-11-25T19:47Z
Check the source to verify that this is the current version before use.

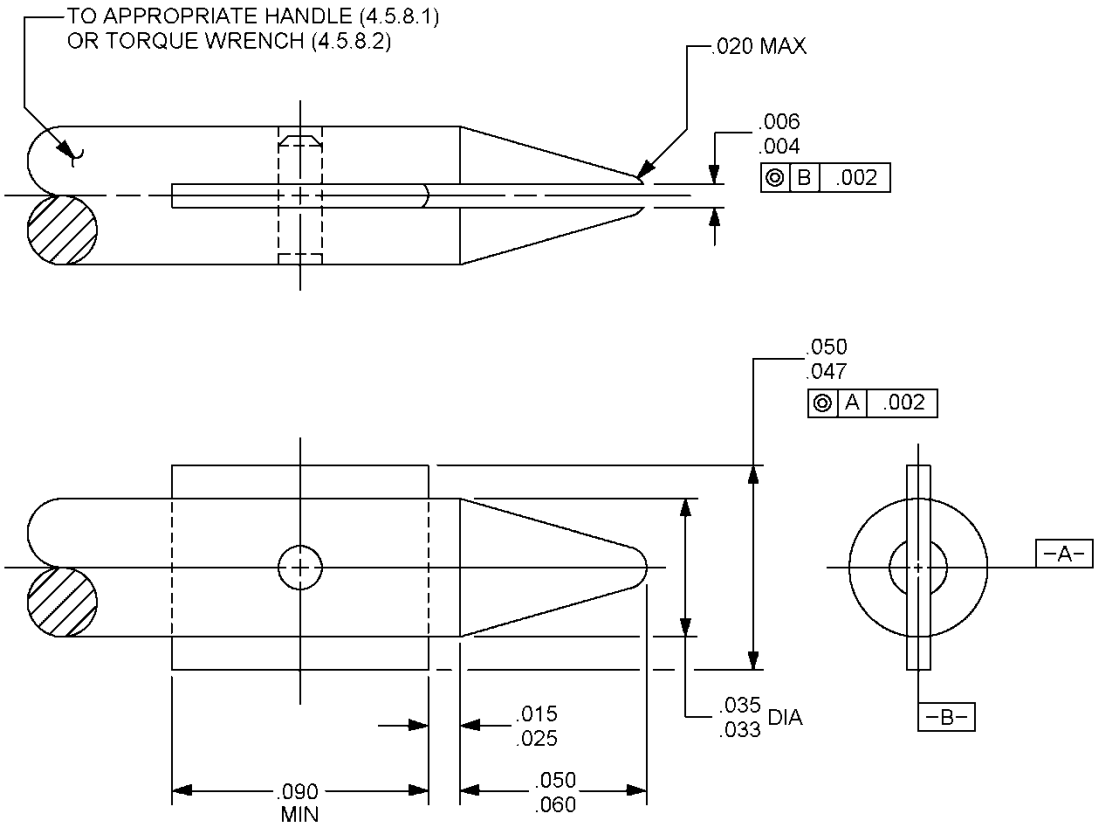

FIGURE A-11. SMA test tool for center contact retention (see 4.5.8), (for axial force see 4.5.8.1 and torque see 4.5.8.2).

Source: https://assist.dla.mil -- Downloaded: 2016-11-25T19:47Z
Check the source to verify that this is the current version before use.

CONCLUDING MATERIAL

Custodians:
Army – CR
Navy – EC
Air Force – 85
DLA - CC

Review activities:
Army – AR, AT, MI
Navy – AS, MC, SH
Air Force – 19, 99

Preparing activity:
DLA - CC

(Project 5935-2015-013)

NOTE: The activities listed above were interested in this document as of the date of this document. Since organizations and responsibilities can change, you should verify the currency of the information above using the ASSIST Online database at https://assist.dla.mil.

Source: https://assist.dla.mil -- Downloaded: 2016-11-25T19:47Z
Check the source to verify that this is the current version before use.