MILITARY STANDARD
Packaging of Petroleum and Related Products

To All Holders of MIL-STD-290E

1. The following pages of MIL-STD-290E have been revised and supersede the pages listed:

New Page	Date	Superseded Page	Date
iii	1 May 1981	(Reprinted without change)	
iv	1 Sep 1982	iv	1 May 1981
v	1 Sep 1982	v	1 May 1981
vi	1 Sep 1982	vi	1 May 1981
1	1 Sep 1982	1	1 May 1981
2	1 Sep 1982	2	1 May 1981
3	1 May 1982	(Reprinted without change)	
4	1 Sep 1982	4	1 May 1981
5	1 Sep 1982	5	1 May 1981
6	1 Sep 1982	6	1 May 1981
7	1 Sep 1982	7	1 May 1981
8	1 Sep 1982	8	1 May 1981
9	1 Sep 1982	9	1 May 1981
10	1 Sep 1982	10	1 May 1981
11	1 Sep 1982	11	1 May 1981
12	1 Sep 1982	12	1 May 1981
13	1 Sep 1982	13	1 May 1981
14	1 Sep 1982	14	1 May 1981
15	1 Sep 1982	15	1 May 1981
16	1 Sep 1982	16	1 May 1981
17	1 Sep 1982	17	1 May 1981
17a	1 Sep 1982		
18	1 Sep 1982	18	1 May 1981
19	1 Sep 1982	19	1 May 1981
20	1 Sep 1982	20	1 May 1981
21	1 Sep 1982	21	1 May 1981
22	1 May 1981	(Reprinted without change)	
23	1 Sep 1982	23	1 May 1981
23a	1 Sep 1982		
24	1 May 1981	(Reprinted without change)	
25	1 May 1981	(Reprinted without change)	
26	1 Sep 1982	26	1 May 1981
27	1 Sep 1982	27	1 May 1981
28	1 Sep 1982	28	1 May 1981
29	1 Sep 1982	29	1 May 1981
30	1 May 1981	(Reprinted without change)	
31	1 May 1981	(Reprinted without change)	
32	1 Sep 1982	32	1 May 1981

Source: https://assist.dla.mil -- Downloaded: 2017-01-15T06:48Z
Check the source to verify that this is the current version before use.

2. RETAIN THIS NOTICE AND INSERT BEFORE TABLE OF CONTENTS.

3. Holders of MIL-STD-290E will update their copies with the changes and additions indicated above. This notice page will be retained as a check sheet. This issuance, together with appended pages, is a separate publication. Each notice is to be retained by stocking points until the Military Standard is completely revised or cancelled.

Custodians:
Army - SM
Navy - SA
Air Force - 68

Preparing Activity:
Navy - SA
Project: PACK 0695

Other Interest:
MI, MR, YD, MC, SH, AS
GS, PS

Source: https://assist.dla.mil -- Downloaded: 2017-01-15T06:48Z
Check the source to verify that this is the current version before use.

CONTENTS

		Page
1.	Scope	1
1.1	Purpose	1
1.2	Application	1
1.2.1	Centrally Procured Items	1
1.2.2	Locally Procured Items	1
1.3	Options	1
2.	Reference documents	1
3.	Definitions	3
3.1	Commercial packaging	3
3.2	Exterior Pack	3
3.3	Intermediate Pack	3
3.4	Levels of Protection	3
3.5	Marking	3
3.6	Shelf life items	3
3.6.1	Type I shelf life item	3
3.6.2	Type II shelf life item	4
3.7	Unit Pack	4
4.	General Requirements	4
4.1	Unit Containers	4
4.2	Coating of metal containers	4
4.3	Packing	4
4.4	Marking	4
4.5	Palletization	4
4.6	DOT Regulations	4
5.	Detailed Requirements	4
5.1	Packing products in composite cans	4
5.1.1	Unit Packing	4
5.1.2	Exterior Packing	4
5.1.2.1	Level B	4
5.1.2.2	Level C	5
5.1.2.3	Commercial	5
5.2	Packing products in metal cans	5
5.2.1	Unit Packing	5
5.2.2	Intermediate packing	5
5.2.3	Exterior packing	5
5.2.3.1	Level B	5
5.2.3.1.1	Intermediate packs of filled cans of less than 1-pint capacity	5
5.2.3.1.2	Filled cans of 1-pint capacity and over	5
5.2.3.2	Level C	6
5.2.3.2.1	Intermediate packs of cans less than 1-pint capacity	6
5.2.3.2.2	Filled cans 1-pint capacity and over	6
5.2.3.3	Commercial	6
5.3	Packing Standard Grease Cartridges	6
5.3.1	Unit packing	6
5.3.2	Intermediate packing	6
5.3.3	Exterior packing	6
5.3.3.1	Level B	6
5.3.3.2	Level C	6
5.3.3.3	Commercial	6

Source: https://assist.dla.mil -- Downloaded: 2017-01-15T06:48Z
Check the source to verify that this is the current version before use.

		Page
5.4	Packing products in drums	6
5.4.1	Palletization	6
5.5	Packing products in pails	7
5.6	Packing products in bottles, jars and collapsible tubes	7
5.6.1	Unit packing	7
5.6.2	Intermediate packing	7
5.6.3	Exterior packing	7
5.6.3.1	Level B	7
5.6.3.2	Level C	7
5.6.3.3	Commercial	7
5.7	Packing Speciality Products	7
5.7.1	Stick form grease	7
5.7.1.1	Unit packing	7
5.7.1.2	Exterior packing	7
5.7.1.2.1	Level B	7
5.7.1.2.2	Level C	8
5.7.1.2.3	Commercial	8
5.7.2	Wax	8
5.7.2.1	Unit packing	8
5.7.2.1.1	One-pound wax cakes	8
5.7.2.2	Exterior packing	8
5.7.2.2.1	Level B	8
5.7.2.2.1.1	One-pound wax cakes	8
5.7.2.2.1.2	Ten and eleven-pound wax slabs	8
5.7.2.2.1.3	Solid wax	8
5.7.2.2.2	Level C	8
5.7.2.2.2.1	One-pound wax cakes	8
5.7.2.2.2.2	Ten and eleven-pound wax slabs	8
5.7.2.2.2.3	Solid wax	8
5.7.2.2.3	Commercial	9
5.8	Exterior Color Coating of Metal Containers	9
5.8.1	General	9
5.8.2	Hydraulic Fluids	9
5.8.2.1	Color	9
5.8.3	Synthetic Lubricating Oils	10
5.8.4	Petroleum Lubricating Oils	10
5.8.5	Brake Fluids	10
5.9	Marking	11
5.9.1	Material and Methods	11
5.9.1.1	Labels	11
5.9.2	Color of markings	11
5.9.3	Abbreviations	11
5.9.4	Identification, contract data and address markings	12
5.9.4.1	Unit containers one gallon size and smaller	12
5.9.4.2	Unit and intermediate containers	12
5.9.4.3	Drums and pails	12
5.9.4.4	Fiberboard shipping containers	12
5.9.4.5	Unit loads	12
5.9.4.6	Location and sequence of marking	13
5.9.4.6.1	NATO Code	13
5.9.4.6.2	Military Symbol	13
5.9.4.6.3	Item Description	13

Source: https://assist.dla.mil -- Downloaded: 2017-01-15T06:48Z
Check the source to verify that this is the current version before use.

		Page
5.9.4.6.4	Specification number	13
5.9.4.6.5	Type, class and grade	13
5.9.4.6.6	National Stock Number	13
5.9.4.6.7	Shelf-life markings	14
5.9.4.6.8	Date of manufacture	14
5.9.4.6.9	Batch or lot number	14
5.9.4.6.10	Contract number	15
5.9.4.6.11	Qualification number	15
5.9.4.6.12	Net contents	15
5.9.4.6.13	Regulatory marking and labeling	15
5.9.4.6.13.1	Proper shipping name	15
5.9.4.6.13.2	UN/NA class number	15
5.9.4.6.14	Other statute markings	15
5.9.4.6.15	Flash point and boiling point marking	15
5.9.4.6.16	Precautionary markings for hazardous chemicals	16
5.9.4.6.17	Quantity	16
5.9.4.6.18	Unit of Issue	16
5.9.4.6.19	Address marking	16
5.9.4.6.19.1	Full carloads and full truckloads	16
5.9.4.6.19.2	Less than carload and less than truckload shipments	16
5.9.4.6.20	Gross weight	16
5.9.4.6.21	Cube	16
5.9.4.6.22	Contractor's name	17
5.9.4.6.23	Barcoding	17
5.10	Returnable Drum Deposit Marking	17
5.11	Hazardous Material Data	17
6.	Notes	17
6.1	Ordering Data	17

Supersedes page v of 1 May 81

Source: https://assist.dla.mil -- Downloaded: 2017-01-15T06:48Z
Check the source to verify that this is the current version before use.

CONTENTS (continued)

		Page
Figure 1	Marking Unit Continers (one gallon and less) for Level B Shipments	18
Figure 2	Marking Intermediate Packs, Level B and C, and Commercial	19
Figure 3	Marking Closed Head Drums	20
Figure 4	Marking Pails for Levels B and C, and Commercial	21
Figure 5	Marking Fiberboard Exterior Packs (Levels B and C, and Commercial)	22
Figure 6	Marking Palletized Shipments of Petroleum and Related Products	23
Figure 7	55-Gallon Drum Palletization	23a
Table I	Unit Containers for Petroleum and Related Products	24
Table II	Classification of Cans and Requirements for Arrangement in Interior and Exterior Packs	29
Table III	Packing Arrangement of Tubes, Bottles and Jars	29
Table IV	Identification and Contract Data Marking on Unit Containers, One Gallon and Less	30
Table IVa	Identification and Contract Data Markings On Unit and Intermediate Containers (Folding, Setup and Fiberboard Boxes)	31
Table IVb	Markings on Drums and Pails: Levels B and C, and Commercial	32
Table IVc	Identification Contract Data and Address Markings on Exterior Fiberboard Boxes for Packed Petroleum and Related Items (Levels B and C, and Commercial)	33

Supersedes page vi of 1 May 81

Source: https://assist.dla.mil -- Downloaded: 2017-01-15T06:48Z
Check the source to verify that this is the current version before use.

1. SCOPE

1.1 Purpose. The purpose of this Standard is to provide uniform requirements for packing and marking of petroleum and related products.

1.2 Application.

1.2.1 Centrally procured items. The level of protection as well as any special marking requirements will be incorporated in purchasing documents.

1.2.2 Locally procured items. This Standard is not mandatory for items locally procured for immediate use.

1.3 Options. Where options are indicated concerning methods of packaging or designation of the method is not specified in the contract or order, the selection shall be at the option of the contractor.

2. REFERENCE DOCUMENTS

2.1 The following documents of the issues in effect on the date of inviation for bids or request for proposal form a part of this standard to the extent specified herein.

SPECIFICATIONS

FEDERAL

PPP-B-636	- Box, Shipping, Fiberboard
PPP-C-96	- Can, Metal, 28 gage and Lighter
ppp-C-1581	- Can, Composite, with Metal Ends, for Liquid Items
PPP-D-723	- Drum, Fiber
PPP-P-704	- Pail, Shipping, Steel (1 through 12 Gallon)
PPP-T-1637	- Tube, Shipping, Collapsible
NN-P-71	- Pallets
QQ-S-781	- Strapping, steel

MILITARY

MIL-P-19602	- Primer, Size Coating, Baking, for Roller Coat Application
MIL-E-19603	- Enamel, Baking, for Roller Coat Application
MIL-G-22587	- Cartridge, Grease, 14 Ounce (for Cartridge-type Grease Gun)

Supersedes page 1 of 1 May 81

Source: https://assist.dla.mil -- Downloaded: 2017-01-15T06:48Z
Check the source to verify that this is the current version before use.

STANDARD

FEDERAL

Federal Standard No 313 - Material Safety Data Sheets, Preparation and Submission of

Federal Standard No 595 - Color

MILITARY

MIL-STD-129 - Marking for Shipment and Storage
MIL-STD-147 - Palletized Unit Loads, 40 inch x 48 inch Pallets, Skids, Runners or Pallet Type Base
MIL-STD-1189 - Standard Sympology for Marking Unit Packs, Outer Containers, and selected documents

(Copies of specifications, standards, drawings and publications required by contractors in connection with specific procurement functions should be obtained from the procuring activity or as directed by the Contracting Officer).

2.2 Other Publications. The following documents form a part of this Standard to the extent specified herein. Unless otherwise indicated the issues in effect on date of inviation for bids or request for proposal shall apply.

GOVERNMENTAL

Code of Federal Regulations, Title 49, Transportation, Parts 100-199

(Application for copies should be addressed to the Superintendent of Documents, U.S. Government Printing Office, Washington, DC 20402).

NONGOVERNMENTAL

AMERICAN NATIONAL STANDARDS INSTITUTE

MH2.1-1979	-	55 Gallon (208 Liter) Tight-Head Universal Steel Drums (DOT-17E, UFC-Rule 40, NMFC-Item 260)
MH2.3-1979	-	55 Gallon (208 Liter) Tight-Head Universal Steel Drums (DOT-5B)
MH2.5-1979	-	55 Gallon (208 Liter) Full-Removable-Head Universal Steel Drum (DOT-17H, UFC-Rule 40, NMFC-Item 260)
MH2.8-1979	-	16 Gallon (61 Liter) Full-Removable-Head Lug-Cover Universal Steel Drums (UFC-Rule 40, NMFC-Item 260)
MH2.9-1979	-	5 Gallon (19 Liter) Tight-Head Universal Steel Pails (DOT-17E, DOT-37B60, UFC-Rule 40, NMFC-Item 260)
MH2.14-1979	-	16 Gallon (61 Liter) Full Removable-Head Universal Steel Drums (UFC-Rule 40, NMFC-Item 260)

Source: https://assist.dla.mil -- Downloaded: 2017-01-15T06:48Z
Check the source to verify that this is the current version before use.

MH2.15-1979 5 Gallon (19 Liter) Nesting Lug-Cover, Universal Steel Pails (DOT 37A80, DOT 37A60 UFC-Rule 40 NMFC- Item 260)

MH3.1-1974 - Round Metal Motor Oil Cans

MH3.3-1975 - Grease Cartridge

MH3.4.-1976 - Round Composite Motor Oil Cans

Z-129.1-1976 - Precautionary labeling of Hazardous Industrial Chemicals

(Copies may be purchased from the American National Standards Institute, Inc., 1430 Broadway, New York, New York 10018.)

Uniform Freight Classification; Uniform Classification Committee, Agent

(Copies may be purhcased from the Uniform Classification Committee, Room 1106, 222 South Riverside Plaza, Chicago, IL 60606.)

3. DEFINITIONS

3.1 Commercial packaging. The methods and materials employed by the supplier to satisfy the requirements of the commercial distribution system.

3.2 Exterior pack. A container, bundle, or assembly which is sufficient by reason of material, design and construction to protect material during shipment and storage. This can be the unit pack or a container with any combination of unit or intermediate packs.

3.3 Intermediate pack. A wrap or box which contains two or more identical unit packs.

3.4 Levels of protection. The degree of preservation or packing required to prevent deterioration or damage to supplies and equipment due to the hazards to which they may be subjected during shipment and storage.

3.5 Marking. Application of numbers, letters, labels, tags, symbols or colors for handling or identification during shipment and storage.

3.6 Shelf-life item. An item of supply possessing deteriorative or unstable characteristics to the degree that a storage time period must be assigned to assure that it will perform satisfactorily in service. There are two types of shelf-life items.

3.6.1 Type I Shelf-life item. An item of supply which is determined through an evaluation of technical test data and/or actual experience, to be an item with a definite nonextendible period of shelf life.

Source: https://assist.dla.mil -- Downloaded: 2017-01-15T06:48Z
Check the source to verify that this is the current version before use.

3.6.2 Type II Shelf-life item. An item of supply with an assigned storage time period which may be extended after the completion of prescribed inspection and/or restorative action.

3.7 Unit pack. The first tie, wrap or container applied to a single item or a quantity thereof, or to a group of items of a single stock number, preserved or unpreserved, which constitutes a complete identifiable pack. For petroleum products, the unit pack is a can, drum, pail, or the pack described in the requirements, section 4 and 5.

4. GENERAL REQUIREMENTS

4.1 Unit containers. Unit containers for packaging petroleum and related products shall conform to the requirements for level B or C, or commercial as specified in Table I. Closures and seals for unit containers shall be as specified in Table I.

4.2 Coating of metal containers. Metal containers shall be coated (paint type) as specified in Table I and 5.9.

4.3 Packing. Petroleum and related products in unit containers specified in Table I shall be packed level B or C, or commercial as specified in 5.1 through 5.6. (See 6.1) Specialty products shall be packed as specified in 5.7.

4.4 Marking. Packed petroleum and related products will be marked as specified in 5.10.

4.5 Palletization. When specified, packed petroleum and related products will be palletized in accordance with 5.8. (See 6.1)

4.6 DOT Regulations. All petroleum and related products regulated by the Department of Transportation shall be packed in containers conforming to 49 CFR. The containers shall also meet the requirements of Air Force Regulation 71-4 when Military Air Lift is involved. Additionally, when specified, petroleum and related products shall be packaged in containers meeting the 15 PSI internal air gauge pressure leakage test requirements. (See 5.4 and 6.1)

5. DETAILED REQUIREMENTS

5.1 Packing products in composite cans.

5.1.1 Unit pack. When petroleum and related products are furnished in composite cans, such cans shall conform to the requirements specified in Table I for the appropriate level as specified in the contract or order. (See 6.1)

5.1.2 Exterior packing. Filled and closed composite cans shall be packed level B or C, or commercial as specified in the contract or order. (See 6.1)

5.1.2.1 Level B. Filled and closed composite cans, in the quantity and arrangement specified in Table II, shall be packed in V3c, V3s, W5c, or W5s style RSC fiberboard boxes constructed and closed in accordance with PPP-B-636. Boxes shall be top loading or end loading.

Source: https://assist.dla.mil -- Downloaded: 2017-01-15T06:48Z
Check the source to verify that this is the current version before use.

5.1.2.2 Level C. Filled and closed composite cans, in the quantity and arrangement specified in Table II, shall be packed in domestic, style RSC fiberboard boxes constructed and closed in accordance with PPP-636. Boxes shall be top loading or end loading.

5.1.2.3 Commercial. Filled and closed cans shall be packed in a manner that will afford adequate protection against damage during direct shipment from the supply source to the first receiving activity. The shipping containers shall conform to the Uniform Freight Classification Rules or other carrier regulations applicable to the mode of transportation.

5.2 Packing products in metal cans.

5.2.1 Unit pack. When petroleum and related products are furnished in metal cans, such cans shall conform to the requirements specified in Table I for the appropriate level as specified in the contract or order. (See 6.1)

5.2.2 Intermediate packing. Filled and closed metal cans of less than 1-pint capacity shall be intermediately packed in accordance with commercial practice.

5.2.3 Exterior packing. Filled and closed cans shall be packed level B or C, or commercial as specified in the contract or order. (See 6.1)

5.2.3.1 Level B.

5.2.3.1.1 Intermediate packs of filled cans of less than 1-pint capacity. Intermediate packs in the quantity and arrangement specified in Table II, shall be packed in V3s, V3c, W5s, or W5c style RSC fiberboard boxes constructed and closed in accordance with PPP-B-636. Boxes may be end loading or top loading.

5.2.3.1.2 Filled cans 1-pint capacity and over. Filled and closed cans of 1-pint capacity and over, in the quantity and arrangement specified in Table II, shall be packed in snug fitting V3s, V3c, W5s, or W5c style RSC fiberboard boxes constructed and closed in accordance with PPP-B-636. Boxes may be end loading or top loading. Cans with protruding closures shall be protected with cell spacers or buffer pads, formed from scored sheets of fiberboard or from polystyrene cushioning materials or full height, snug fitting, half-slotted style, interlocking fiberboard partitions. The design number and arrangement of the pads shall prevent movement and provide clearance.

Source: https://assist.dla.mil -- Downloaded: 2017-01-15T06:48Z
Check the source to verify that this is the current version before use.

5.2.3.2 Level C.

5.2.3.2.1 Intermediate packs of cans less than 1-pint capacity. Intermediate packs in the quantity and arrangement specified in Table II shall be packed in snug-fitting domestic grade, style RSC fiberboard boxes constructed and closed in accordance with PPP-B-636. Boxes may be top loading or end loading.

5.2.3.2.2 Filled cans 1-pint capacity and over. Filled cans of 1-pint capacity and voer shall be packed and cushioned as specified in 5.2.3.1.2 except that the fiberboard boxes shall be domestic grade.

5.2.3.3 Commercial. Filled and closed cans shall be packed in a manner that will afford adequate protection against damage during direct shipment from the supply source to the first receiving activity. The shipping containers shall conform to the Uniform Freight Classification Rules or other carrier regulations applicable to the mode of transportation.

5.3 Packing Standard Grease Cartridges (14-ounce nominal contents for Cartridge-type Grease Guns).

5.3.1 Unit packing. Grease shall be furnished in grease cartridges conforming to the requirements in Table I for level B or C, or commercial as specified in the contract or order. (See 6.1)

5.3.2 Intermediate packing. Filled cartridges shall be intermediately packed in accordance with commercial practice.

5.3.3 Exterior packing. Exterior packing shall be level B or C, or commercial as specified in the contract or order.

5.3.3.1 Level B. Not more than sixty filled grease cartridges, intermediately packed as specified in 5.3.2, shall be packed in V3c, V3s, W5c, W5s, W6c, or B-636. Boxes may be top loading or end loading.

5.3.3.2 Level C. Not more than sixty filled grease cartridges, intermediately packed as specified in 5.3.2 shall be packed in domestic grade, style RSC fiberboard boxes constructed and closed in accordance with PPP-B-636.

5.3.3.3 Commercial. Filled cartridges shall be packed in a manner that will afford adequate protection against damage during direct shipment from the supply source to the first receiving activity. The shipping containers shall conform to the Uniform Freight Classification Rules or other carrier regulations applicable to the mode of transportation.

5.4 Packing products in drums. When drums are required, drums shall conform to the requirements in Table I for the appropriate level specified in the contract or order. When Military Air Shipment is involved such drums shall also meet the requirements of Air Force Regulation 71-4. (See 6.1)

5.4.1 Palletization. When specified, four 55-gallon drums shall be palletized on a 48 X 48 double wing pallet conforming to NN-P-71 as shown in Figure 7. Strapping shall be 3/4" conforming to QQ-S-781. See Figure 7, 55-gallon drum palletization.

Source: https://assist.dla.mil -- Downloaded: 2017-01-15T06:48Z
Check the source to verify that this is the current version before use.

5.5 Packing products in pails. Petroleum and related products shall be furnished in pails conforming to the requirements in Table I of level B or C, or commercial as specified in the contract or order. (See 6.1)

5.6 Packing products in bottles, jars and collapsible tubes.

5.6.1 Unit packing. Petroleum and related products shall be furnished in bottles, jars, or collapsible tubes conforming to the requirements in Table I for level B or C, or commercial as specified in the contract or order. (See 6.1)

5.6.2 Intermediate packing. Filled bottles, jars, or collapsible tubes of less than one pound capacity shall be intermediately packed in accordance with commercial practice.

5.6.3 Exterior packing. Exterior packing shall be level B or C, or commercial as specified in the contract or order. (See 6.1)

5.6.3.1 Level B. Unit and intermediate packs in quantities and arrangement specified in Table III shall be packed in V3c, V3s, W5s, W5c, W6s, or W6c fiberboard boxes constructed and closed in accordance with PPP-B-636. Boxes may be top loading or end loading. For one-pound unit containers and larger, full-height partitions with full-size top and bottom pads shall be used.

5.6.3.2 Level C. Unit and intermediate packs shll be packed as specified in 5.6.3.1 except that domestic grade, style RSC boxes constructed and closed in accordance with PPP-B-636 shall be used.

5.6.3.3 Commercial. Filled bottles, jars or collapsible tubes shall be packed in a manner that will afford adequate protection against damage during direct shipment from the supply source to the first receiving activity. The shipping containers shall conform to the Uniform Freight Classification Rules or the carrier rules and regulations applicable to the mode of transportation.

5.7 Packing of Speciality Products.

5.7.1 Stick form grease.

5.7.1.1 Unit packing. Stick form grease shall be unit packed in accordance with commercial practice.

5.7.1.2 Exterior packing. Stick form grease shall be packed level B or C, or commercial as specified in the contract or order. (See 6.1)

5.7.1.2.1 Level B. Stick form grease unit packed as specified in 5.7.1.1, shall be packed in V3c, V3s, W5c, W5s, W6c, or W6s fiberboard boxes constructed and closed in accordance with PPP-B-636. The weight shall not exceed the weight limit of PPP-B-636.

Source: https://assist.dla.mil -- Downloaded: 2017-01-15T06:48Z
Check the source to verify that this is the current version before use.

5.7.1.2.2 Level C. Stick form grease, unit packed as specified in 5.7.1.1, shall be packed in domestic fiberboard boxes constructed and closed in accordance with PPP-B-636. The weight shall not exceed the weight limit of PPP-B-636.

5.7.1.2.3 Commercial. Stick form grease shall be packed in a manner that will provide adequate protection against damage during direct shipment from the supply source to the first receiving activity. Shipping containers shall conform to the Uniform Freight Classification Rules or carrier rules applicable to the mode of transportation.

5.7.2 Wax.

5.7.2.1 Unit packing.

5.7.2.1.1 One-pound wax cakes. Single one-pound cakes or four 1/4 pound cakes shall be wrapped in wax paper or unit packed in plastic bags, folding or set up boxes.

5.7.2.2 Exterior packing. Wax shall be packed level B or C, or commercial as specified. (See 6.1)

5.7.2.2.1 Level B.

5.7.2.2.1.1 One-pound wax cakes. Twenty (20) one-pound cakes or 80 1/4 pound cakes, unit packed as specified in 5.7.2.1, shall be packed in V3s, V3c, W5c, W5s, W6c, or W6s fiberboard boxes constructed and closed in accordance with PPP-B-636.

5.7.2.2.1.2 Ten and eleven-pound wax slabs. Five or six 10 or 11-pound slabs shall be packed in V3s, V3c, W5c, or W5c fiberboard boxes constructed and closed in accordance with PPP-B-636.

5.7.2.2.1.3 Solid Wax. Solid wax shall be packed in fiber drums conforming to Grade C, Type II of PPP-D-723. Net contents of hot filled drums shall be 370 plus or minus 30 lbs.

5.7.2.2.2 Level C.

5.7.2.2.2.1 One-pound wax cakes. Twenty (20) one-pound cakes or 80 1/4 pound cakes, unit packed as specified in 5.7.2.1, shall be packed in domestic fiberboard boxes constructed and closed in accordance with PPP-B-636.

5.7.2.2.2.2 Ten and eleven-pound wax slabs. Five or six 10 or 11-pound slabs shall be packed in domestic fiberboard boxes constructed and closed in accordance with PPP-B-636.

5.7.2.2.2.3 Solid Wax. Solid wax shall be packed in fiber drums conforming to Grade C, Type I of PPP-D-723. Net contents of hot-filled drums shall be 370 plus or minus 30 lbs.

Source: https://assist.dla.mil -- Downloaded: 2017-01-15T06:48Z
Check the source to verify that this is the current version before use.

5.7.2.2.3 Commercial. Wax shall be packed in a manner that will afford adequate protection against damage during direct shipment from the supply source to the first receiving activity. The shipping containers shall conform to the Uniform Freight Classification Rules or the carrier rules and regulations applicable to the mode of transportation.

5.8 Exterior Color Coating of Metal Containers.

5.8.1 General. Exterior coatings (paint type) on metal containers shall be OLIVE DRAB, approximating No. 24064 or 24087 of Federal Standard 595, for all containers except as specified in 5.8.2 through 5.8.5. Certain container areas shall be unpainted as specified in 5.8.2 through 5.8.5. Type I cans requiring unpainted top and bottom lids shall have a 1/4 inch unpainted margin on both ends of 8-ounce can bodies, a 1/2 inch unpainted margin on both ends of 1-quart can bodies and 3/4 unpainted margin on both ends of 1-gallon can bodies. Striping on side seams is not required. Exterior paint is not required on friction rings, on tops and bottoms of 4-ounce capacity or less cans, or on collapsible tubes. The exterior tops and bottoms of 5 gallon cans and larger will be painted. When level C or commercial level is specified, exterior painting of metal containers shall conform to either the above specification or the supplier's commercial color, except: (a) that solid RED, YELLOW or GREEN coatings shall be used only as specified in 5.8.2 through 5.8.5. (b) the silver color or uncolored or plain tin-plate cans will not be allowed for the one quart and one gallon type I cans (metal, round, open-top hermetically sealed when filled).

5.8.2 Hydraulic Fluids.

5.8.2.1 Color. For RED or YELLOW colors the enamel shall conform to Specification MIL-E-19603 and the primer to Specification MIL-P-19602. Colors for containers of other hydraulic fluids shall be as specified in 5.8.1. Color number shall conform to those listed in Federal Standard 595.

a. MIL-H-5606. Hydraulic Fluid, Petroleum Base, Aircraft Missile and Ordnance. Containers of one gallon or less and 10-gallon drums shall be coated RED, a color approximating Color No. 11105 or 21105. Except for 10-gallon drums, containers larger than one-gallon shall be coated OLIVE DRAB, approximating Color No. 24064 or 24087. Exterior tops and bottoms of cans shall not be painted.

b. MIL-H-46004. Hydraulic Fluid, Petroleum Base, Missile. Containers of one-gallon or less shall be coated YELLOW, a color approximating Color No. 23538 or 13538, containers larger than one-gallon shall be coated OLIVE DRAB, a color approximating Color No. 24064 or 24087. Exterior tops and bottoms of cans shall not be painted.

Source: https://assist.dla.mil -- Downloaded: 2017-01-15T06:48Z
Check the source to verify that this is the current version before use.

c. MIL-H-83282. Hydraulic Fluid, Fire Resistant Synthetic Hydrocarbon Base, Aircraft. Containers of one-gallon or less shall be coated RED, a color approximating Color No. 11105 or 21105; containers larger than one-gallon shall be coated OLIVE DRAB, approximating Color No. 24064 or 24087. Exterior tops and bottoms of cans shall not be painted.

d. MIL-H-6083. Hydraulic Fluid, Petroleum Base, for Preservation and Operation. Containers of one-gallon or less shall be coated RED, a color approximating Color No. 11105 or 21105; containers larger than one-gallon shall be coated OLIVE DRAB, approximating Color No. 24064 or 24087. In addition, 5-gallon pails and 55-gallon drums shall have a WHITE band approximately one-inch wide painted on the side directly below the top head chime. Exterior tops and bottoms of cans shall not be painted.

e. MIL-H-46170 Hydraulic Fluid, Rust Inhibited, Fire Resistant, Synthetic Base, Type I and II. Containers of Type I hydraulic fluid shall be coated OLIVE DRAB, approximating Color No. 24064 or 24087. Exterior tops and bottoms of cans shall not be coated. Containers of Type II hydraulic fluid of one-gallon or less shall be coated RED, a color approximating Color No. 11105 or 21105; containers larger than one-gallon shall be coated OLIVE DRAB, approximating Color No. 24064 or 24087. In addition, 5-gallon pails and 55-gallon drums shall have a WHITE band approximately one-inch wide painted on the side directly below the top head chime. Exterior tops and bottoms of cans shall not be painted.

5.8.3 Synthetic Lubricating Oils

a. MIL-L-7808. Lubricating Oil, Aircraft Turbine Engines, Synthetic Base. Exterior tops, bodies and bottoms of 8-ounce, 1-quart and 1-gallon containers shall not be painted.

b. MIL-C-8188. Corrosion Preventive, Aircraft Engine, Turbine. Exterior tops, bodies and bottoms of 1-quart and 1-gallon containers shall not be painted.

c. MIL-L-23699. Lubricating Oil, Aircraft and Turboprop and Turboshaft Engines, Synthetic Base. Exterior tops and bottoms of 8-ounce, 1-quart, and 1-gallon cans shall not be painted. The bodies shall be GREEN approximating No. 14110 of Federal Standard 595, and the markings shall be YELLOW, approximating No. 13655.

5.8.4 Petroleum Lubricating Oils.

a. MIL-L-6081. Lubricating Oil, Jet Engine. Exterior tops and bottoms of 1-quart and 1-gallon hermetically sealed containers shall not be painted.

5.8.5 Brake Fluids.

a. VV-B-680. Brake Fluid, Automative. Exterior tops and bottoms of 1-pint and 1-gallon containers shall not be painted.

B. MIL-B-46176. Brake Fluid, Silicone, Automotive All Weather, Operational and Preservative. Exterior tops and bottoms of 1-pint and 1-gallon containers shall not be painted.

Source: https://assist.dla.mil -- Downloaded: 2017-01-15T06:48Z
Check the source to verify that this is the current version before use.

5.9 Marking.

5.9.1 Material and Methods. Marking shall be clear, legible, durable and non-fading. Marking of unit packs, intermediate packs and exterior packs shall be accomplished by use of labels, stamping, stenciling, printing, lithographing, silk-screening, photo marking, embossing or other similar processes.

5.9.1.1 Labels. Labels may be used for address markings (See 5.9.4.6.19). They are permitted for contract data, and will be used when required by regulation or statute. Labels are permitted for marking identification data on unit containers, unit packs, intermediate packs and on exterior packs when the type or size of exterior pack does not permit stenciling, or the quantity procured does not permit printing.

5.9.2 Color of markings. For levels B and C, markings on OLIVE DRAB coated containers will be YELLOW. Markings on uncoated containers, such as fiberboard or plastic, and on containers coated other than OLIVE DRAB, shall be of contrasting color.

5.9.3 Abbreviations. The following abbreviations are authorized for use. In addition, abbreviations of the item descriptions will be permitted when approved by the procuring agency. Periods will not be used with abbreviations.

(a) Package units:

Bottle	BT
Box	BX
Cake	CK
Can	CN
Carton	CT
Container	CO
Drum	DR
Jar	JR
Pack	PK
Pail	PL
Tube	TU
Unit	UN

(b) Quantitative units:

Ampoule	AM
Dozen	DZ
Each	EA
Great gross	GG
Gross	GR
Group	GP
Hogshead	HH
Hundred	HD
Lot	LO

(c) Weights and measure units:

Cube	CU
Cubic Centimeter	CC
Dram	DM
Fluid Ounce	FL OZ
Foot	FT
Gallon	GL
Gallon Imperial	GB
Gill	GI
Gram	G
Kilogram	KG
Liter	L
Ounce	OZ
Pint	PT
Pound	LB
Quart	QT
Quart Imperial	QI
Volume	VO
Weight	WT

Supersedes page 11 of 1 May 81

Source: https://assist.dla.mil -- Downloaded: 2017-01-15T06:48Z
Check the source to verify that this is the current version before use.

(d) Product markings:

aircraft	ACFT	petroleum	PETRO
and	&	preservative	PRESERV
automotive	AUTO	Qualification number	QUAL
engine	ENG	reciprocating	RECIP
gyroscope	GYRO	temperature	TEMP
lubricating	LUBE	turbine	TURB

(e) Miscellaneous:

Bill of lading	B/L	Packed	PKD
Contract	CONTR	Port transportation officer	PTO
Copy	CY	Quantity	QTY
Federal Supply Class	FSC	Tare weight	T/WT
Federal Supply Code for Manufacturers	FSCM	Transportation Officer	TO
Government Bill of Lading	GBL	Less than carload	LCL
Dimensions	DMN	Less than truckload	LTL
Identification	IDENT	Manufacture	MFR
Invoice	INV	Mark	MK
Manufacturers part number	MFR/PN	Month	MO
Net weight	NET WT	National item identification number	NIIN
		National stock number	NSN

5.9.4 Identification, contract data and address markings.

5.9.4.1 Unit containers one gallon size and smaller. Identification and contract data shall be marked on unit containers one gallon size and less as specified in Table IV. (See Figure 1.)

5.9.4.2 Unit and intermediate containers. Identification and contract data shall be marked on unit and intermediate containers (folding, setup and fiberboard boxes) as specified in Table IVa. (See Figure 2).

5.9.4.3 Drums and pails. Identification, contract data and address markings shall be marked on drums and pails as specified in Table IVb. (See Figures 3 and 4). When shipments are palletized, address markings are not required on each individual container. (See 5.9.4.5)

5.9.4.4 Fiberboard shipping containers. Identification, contract data and address markings shall be marked on exterior fiberboard boxes as specified in Table IVc. (See Figure 5). When shipments are palletized, address markings are not required on each individual container. (See 5.9.4.5)

5.9.4.5 Unit loads. Individual shipping containers composing a unit load shall be marked with the identification markings and contract data required. The palletized load shall be built on the pallet so that the markings on the individual containers show on two adjacent sides of the unit load. The gross weight and cube shall include the weight and cube of the pallet and shall be marked on the address label. Providing that a smooth surface is available, the shipment address shall be applied to the wider side of the palletized load.

Source: https://assist.dla.mil - Downloaded: 2017-01-15T06:48Z
Check the source to verify that this is the current version before use.

If the palletized load does not provide a smooth surface (e.g., a pallet of 5-gallon cans), apply the label on a fiberboard panel, or on a tag placed on any suitable space of an identification marked surface of the load. (See Figure 6)

5.9.4.6 Location and sequence of marking elements. The sequence and location of marking elements as shown in the Figures and Tables are desirable but the sequence of data and location may be varied as required by size of marking and container size and shape. Only the applicable information shall be marked on the containers, not the words in the Tables, such as "Code" or "Military Symbol". Containers not specified in this standard shall be marked to conform to the Tables as closely as practicable. Markings on containers of 5-gallon capacity or less shall occupy a minimum of 60% of the available vertical space on the sides to be marked.

5.9.4.6.1 NATO Code. The NATO Code number is an identifying desgination consisting of a letter and a number assigned to a petroleum product standardized for use by the NATO Armed Forces. The NATO Code number shall be placed above the Military Symbol and enclosed in a rectangle which may be either a continuous or broken line.

5.9.4.6.2 Military Symbol. The Military Symbol shall be the identifying designation assigned in a particular product specification.

5.9.4.6.3 Item description. The item description shall be the exact name and description of the item as it appears in the contract.

5.9.4.6.4 Specification number. The specification number shall be that shown by the contract or order and shall include the revision and amendment designation if any. Nonspecification products such as "brand name or equal" shall be identified with the appropriate brand name and part number as cited in the contract.

5.9.4.6.5 Type, class and grade. The applicable type, class and grade of product as designated in the product specification shall be shown. Type, class and grade may be omitted from markings when they are the same as the Military Symbol.

5.9.4.6.6 National Stock Number. The stock number shall be the exact National Stock Number (NSN) consisting of 13 digits (9150-00-000-0000). When no NSN stock number is available, the applicable Federal Supply Classification (FSC), if known, shall be shown. In addition, when no NSN is available, the manufacturer's part number (MFR/PN) shall be used and space shall be left blank immediately above the number for subsequent placement of the NSN. When the MFR/PN is used, the Federal Supply Code for Manufacturers (FSCM) appropriate to the part number shall precede the part number on the same line. The letters FSCM shall be used to identify the code indicated. (The FSCM is cross-referenced to manufacturers' names and addresses in Cataloging Handbooks H4-1 and H4-2).

Source: https://assist.dla.mil -- Downloaded: 2017-01-15T06:48Z
Check the source to verify that this is the current version before use.

5.9.4.6.7 Shelf-life markings. There are two types of shelf-life items (see 3.6) and when specified in the contract, the type of shelf-life item shall be marked below the item identification data on exterior packs (fiberboard shipping boxes, drums and pails). (See 6.1)

a. Marking for Type I shelf-life items shall be as follows:

Date of Manufacture_____
Expiration Date_____

Instructions:

For the Date of Manufacture, show the actual date, month and year.

For the Expiration Date, show the month of manufacture plus the number of months shelf-life assigned in contract or order.

b. Marking for Type II shelf-life items shall be as follows:

Date of Manufacture_____
Test Date_____
New Test Date_____

Instructions:

For the Date of Manufacture, show the date of manufacture or the middle month of quarter in which material is manufactured.

For the Test Date, show the date of manufacture plus the number of months shelf-life assigned in the contract or order.

After the New Test Date, leave a blank.

5.9.4.6.8 Date of Manufacture. When shelf-life marking is not required the date of manufacture of contents shall be designated by the center month of each quarter and year (namely, February 1985, May 1985, August 1985, and November 1985) in which most of the manufacturing is done, or the actual month and year manufacturing took place (e.g., January 1984, April 1984, December 1984). The date of manufacture may be indicated on the lids of Types I through V cans by embossing or other marking methods.

5.9.4.6.9 Batch or lot number. The batch or lot number shall be that series of numbers or letters or both established by the manufacturer to record production and control of product. Where both lot and batch numbers are applicable, both shall be shown. The word "BATCH" or "LOT" shall precede the applicable batch or lot number on all containers of all products. In those instances where the batch or lot number is manually stenciled on the side of the container, it will be applied in such a manner, utilizing good quality material, as to preclude any tendency to obliterate or smear. Batch or lot number may be indicated on the lids of Type I through V cans by embossing or other marking methods.

Source: https://assist.dla.mil -- Downloaded: 2017-01-15T06:48Z
Check the source to verify that this is the current version before use.

5.9.4.6.10 Contract number. The contract number assigned in the applicable procurement document shall be used.

5.9.4.6.11 Qualification number. The qualification number is the identification code assigned to a product which has been tested for compliance with the specification in advance of procurement. The qualification number for container marking purposes is that series of numbers or letters shown in the column "Test or qualification reference " of the applicable Qualified Products List (QPL). Examples: WORT-P97-3; and AML-AE-1234.5. If the QPL does not include a qualification number as defined above, the information listed under the column "Government designation" of the QPL shall be shown. The qualification number may be indicated on the lids of Types I through V cans by embossing or other marking methods. The abbreviation "QUAL" shall precede the applicable qualification number on all unit and shipping containers. When a contractor is repackaging and supplying a qualified product manufactured by another company, the name of the company to whom the qualification numbers were assigned shall prefix the qualification number on all unit containers. The qualification number shall appear on all unit containers of all products requiring qualification.

5.9.4.6.12 Net contents. Show the net contents by volume or by weight in pounds as appropriate to the commodity.

5.9.4.6.13 Regulatory marking and labeling. Hazardous materials shall be marked and labeled in accordance with the requirements of the 49 CFR, Parts 170-199, to satisfy all mode requirements enroute from source to destination.

5.9.4.6.13.1 Proper shipping name. The proper shipping name is the name of the hazardous material shown in Roman print in 49 CFR 172.101. The proper shipping name shall be marked on the outside of each shipping container. The proper shipping name shall be distinct and apart from the item description.

5.9.4.6.13.2 UN/NA class number. The UN/NA class number is assigned to each item of hazardous material regulated for transportation in 49 CFR. This number shall be marked on the outside of each unit intermediate and shipping container immediately following the proper shipping name.

5.9.4.6.14 Other Precautionary and statute marking. Markings required for any purpose by statute or regulation shall neither obscure not be obscured by other markings.

5.9.4.6.15 Flash point and boiling point marking. Unit and intermediate packs and shipping containers packed with flammable and combustible liquids with a flash point below 200°F (93.3°C) shall be marked with the flash point of contents. In addition, if the flash point is less than 73°F (22.8°C), the boiling point will also be marked. Flash point and boiling point markings shall be expressed in degrees Fahrenheit and shall be applied on the identification marked side by means of labeling, printing, stamping, or stenciling. Flash point shall be determined by using the appropriate test prescribed in 173.115(d) of 49 CFR.

Source: https://assist.dla.mil -- Downloaded: 2017-01-15T06:48Z
Check the source to verify that this is the current version before use.

5.9.4.6.16 Precautionary markings for hazardous chemicals and materials. All unit and intermediate packs of hazardous chemicals and materials shall be labeled in accordance with the applicable laws, statutes, regulations or ordinances, including Federal, State and municipal requirements. In addition, unit and intermediate containers including unit containers that serve as shipping containers such as pails and drums shall be marked with the applicable precautionary information in accordance with the American National Standard for Labeling of Hazardous Industrial Chemicals (ANSI Z129.1-1976). Markings shall be located as specified in Tables IV through IVc. When container size and shape does not permit compliance with the prescribed location, markings shall be located on the opposite side of the unit container, shown in Figure 1. The letters in the signal words POISON, CAUTION and WARNING, and the text shall be large, legible, and appropriate to the space available.

5.9.4.6.17 Quantity. The number of units of issue in a unit pack, intermediate pack or shipping container shall be as specified. (See 6.1)

5.9.4.6.18 Unit of issue. The unit of issue, unit of measure and quantity shall be as indicated in the contract or order. (See 5.10.3 for abbreviations). (See 6.1)

5.9.4.6.19 Address marking. Address markings specified in the contract shall be applied to shipping containers by means of labels or tags or as otherwise specified in 5.10.1. (See 6.1)

5.9.4.6.19.1 Full carloads and full truckloads. The domestic address is not required on shipping containers and palletized unit loads shipped in full carloads or full truckloads to a single consignee.

5.9.4.6.19.2 Less than carload (LCL) and less than truckload (LTL). The domestic address is required on all shipping containers and palletized unit loads for less-than-carload and less-than-truckload lots. The domestic address is not required on shipping containers in a palletized unit load. One address marking will be applied to each unit load in an LCL or LTL shipment.

5.9.4.6.20 Gross weight. The gross weight shall be the combined weight of the item, cushioning materials and containers. The capital letters "WT" shall precede gross weight numerals. All weights shall be numerically indicated and shall be expressed in pounds to the next largest whole pound.

5.9.4.6.21 Cube. The letters "CU" shall precede the cube (cubic displacement) numerals. The cube shall be the cubic displacement of the shipping container, calculated from the extreme overall length, width, and height dimensions, and shall be shown in cubic feet expressed decimally to the nearest one-tenth of a cubic foot. Irregular, cylindrical, or round items shall be considered as rectangular solids.

Source: https://assist.dla.mil -- Downloaded: 2017-01-15T06:48Z
Check the source to verify that this is the current version before use.

5.9.4.6.22 Contractor's name. Where the contractor's name requires two or more lines, a readily identifiable abbreviation is permitted.

5.9.4.6.23 Bar Coding. All unit, intermediate and shipping containers will be marked with bar coding symbols in accordance with MIL-STD-1189, and located in accordance with MIL-STD-129.

5.10 Returnable Drum Deposit Marking. Drums returnable to the supplier for a deposit refund shall be conspicuously marked to indicate the amount of deposit and the location to which it is returnable.

5.11 Hazardous material data. When specified in the contract, a Material Safety Data Sheet shall be prepared and submitted in accordance with Federal Standard No. 313. (See 6.1)

6. Notes

6.1 Ordering Data

4.3 State Level B or C, or Commercial packing.

4.5 Specify palletization, if required.

4.6 Specify when Military Air Shipment requirements also apply.

5.1.1 State Level B or C, or Commercial unit packing

5.1.2 State Level B or C, or Commercial packing

5.2.1 State Level B or C, or Commercial unit packing.

5.2.3 State Level B or C, or Commercial packing.

5.3.1 State Level B or C, or Commercial packing.

5.4 State Level B or C, or Military Airlift Requirements. When Military Airlift is required the contracting officer shall provide necessary instructions and forms in accordance with Air Force Regulation 71-4.

5.5 State Level B or C, or Commercial packing.

5.6.1 State Level B or C, or Commercial packing.

5.6.3 State Level B or C, or Commercial packing.

5.7.1.2 State Level B or C, or Commercial exterior packing.

5.7.2.2 State Level B or C, or Commercial exterior packing.

5.8 Specify palletization, if required.

5.9.4.6.12 Net contents. Show the net contents, by volume or by weight in pounds, as appropriate to the commodity.

Source: https://assist.dla.mil -- Downloaded: 2017-01-15T06:48Z
Check the source to verify that this is the current version before use.

in each WP

Source: https://assist.dla.mil -- Downloaded: 2017-01-15T06:48Z
Check the source to verify that this is the current version before use.

(Project IMSS-N166.)

5.9.4.6.17 Specify units of issue to the unit pack, intermediate pack and shipping container.

5.9.4.6.18 Specify the unit of issue, unit of measure and quantity to be used.

5.9.4.6.19 Specify address markings to be used.

5.11 When a Material Safety Data Sheet is required, include DAR clause and specify the mailing address.

Custodians
Army - SM
Navy - SA
Air Force - 68

Review Activities
Army - MI, MR,
Navy - AS, SH, YD, MC
DLA-PA

Preparing Activity
Navy - SA
Project No.
PACK 0570

New Page

Source: https://assist.dla.mil -- Downloaded: 2017-01-15T06:48Z
Check the source to verify that this is the current version before use.

The sequence and location of marking elements as shown in this Figure are desirable but the sequence of data and location may be varied as required by size of markings and container size and shape.

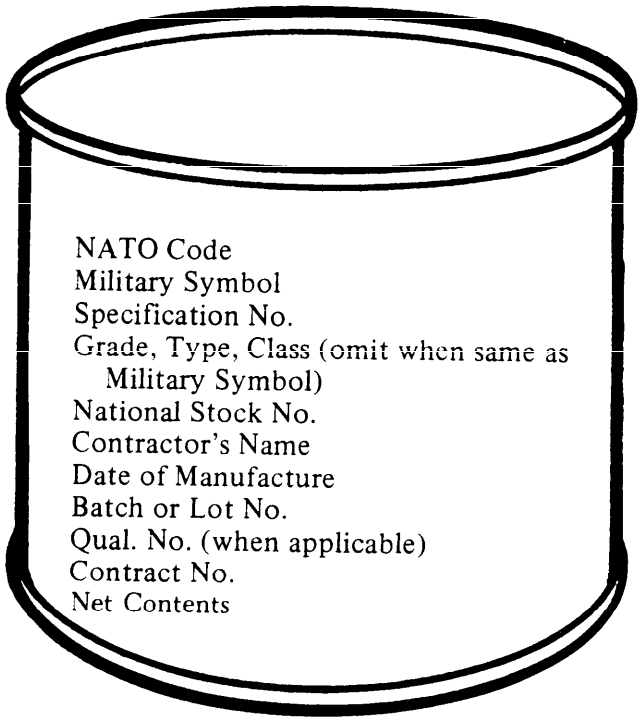

Side

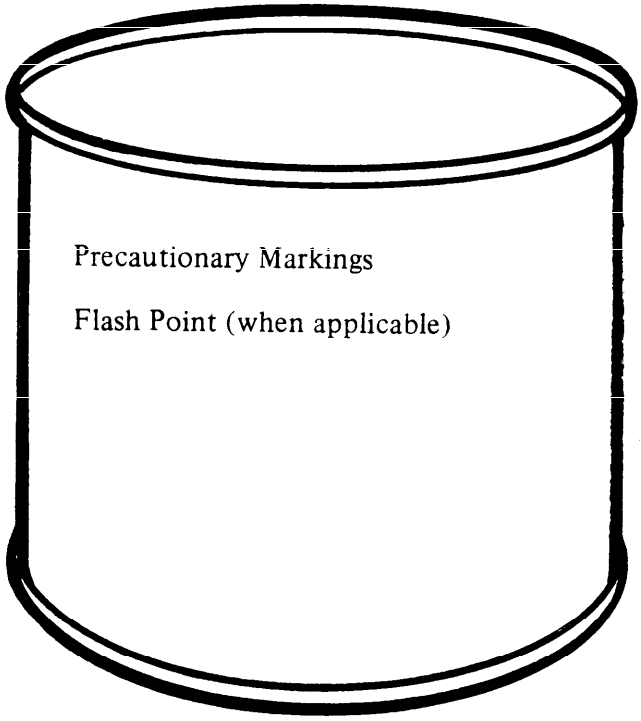

Opposite Side

FIGURE 1 – Marking Unit Containers (one gallon and less) for Level B Shipments.

Source: https://assist.dla.mil -- Downloaded: 2017-01-15T06:48Z
Check the source to verify that this is the current version before use.

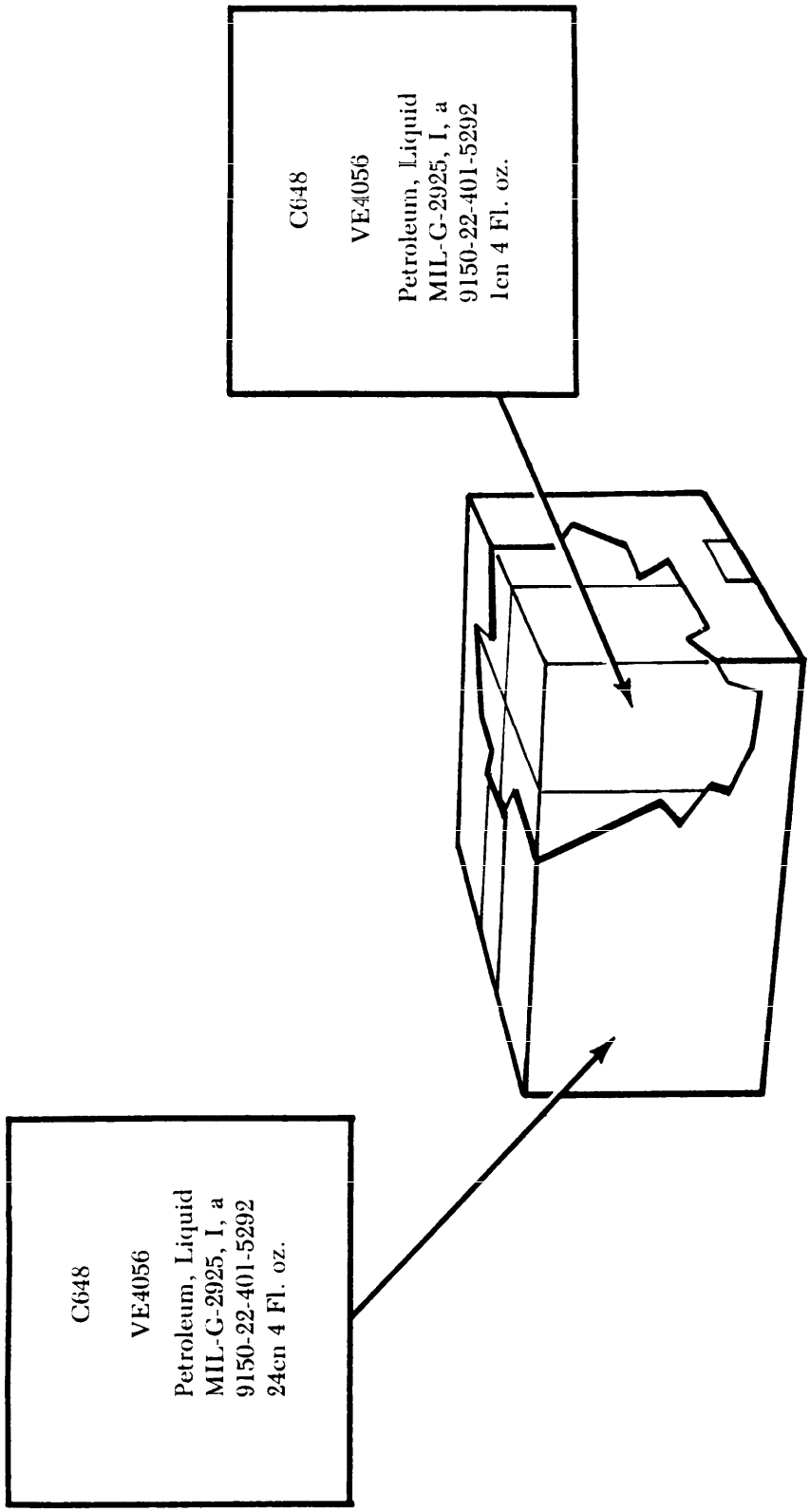

The sequence and location of marking elements as shown in this figure are desirable but the sequence of data and location may be varied as required by size of marking and container size and shape.

FIGURE 2 - Marking Unit and Intermediate Packs, Level B and C, and Commercial

Source: https://assist.dla.mil -- Downloaded: 2017-01-15T06:48Z
Check the source to verify that this is the current version before use.

Top Head

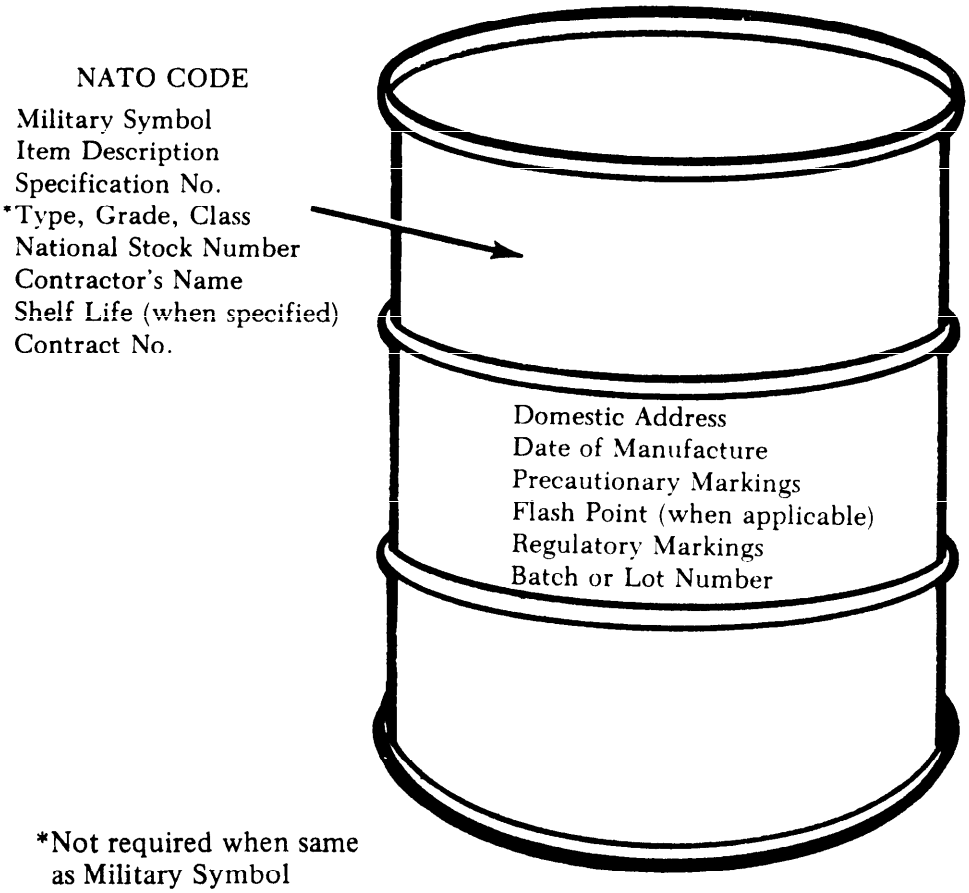

Side

The sequence and location of marking elements as shown on this figure are desirable but the sequence of data and location may be varied as required by size of markings and container size and shape.

FIGURE 3 – Marking Closed Head Drums

Source: https://assist.dla.mil -- Downloaded: 2017-01-15T06:48Z
Check the source to verify that this is the current version before use.

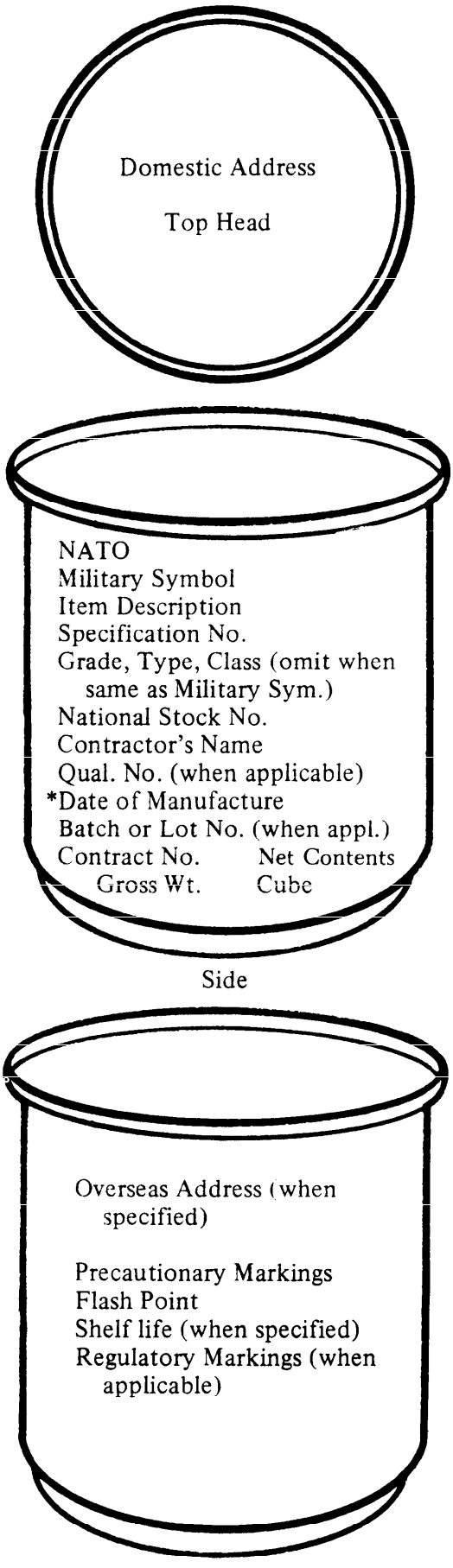

*Not required when shelf life markings are specified

The sequence and location of marking elements as shown in this Figure are desirable but the sequence of data and location may be varied as required by size of marking and container size and shape.

FIGURE 4 – Marking Pails for Levels B and C, and Commercial

Source: https://assist.dla.mil -- Downloaded: 2017-01-15T06:48Z
Check the source to verify that this is the current version before use.

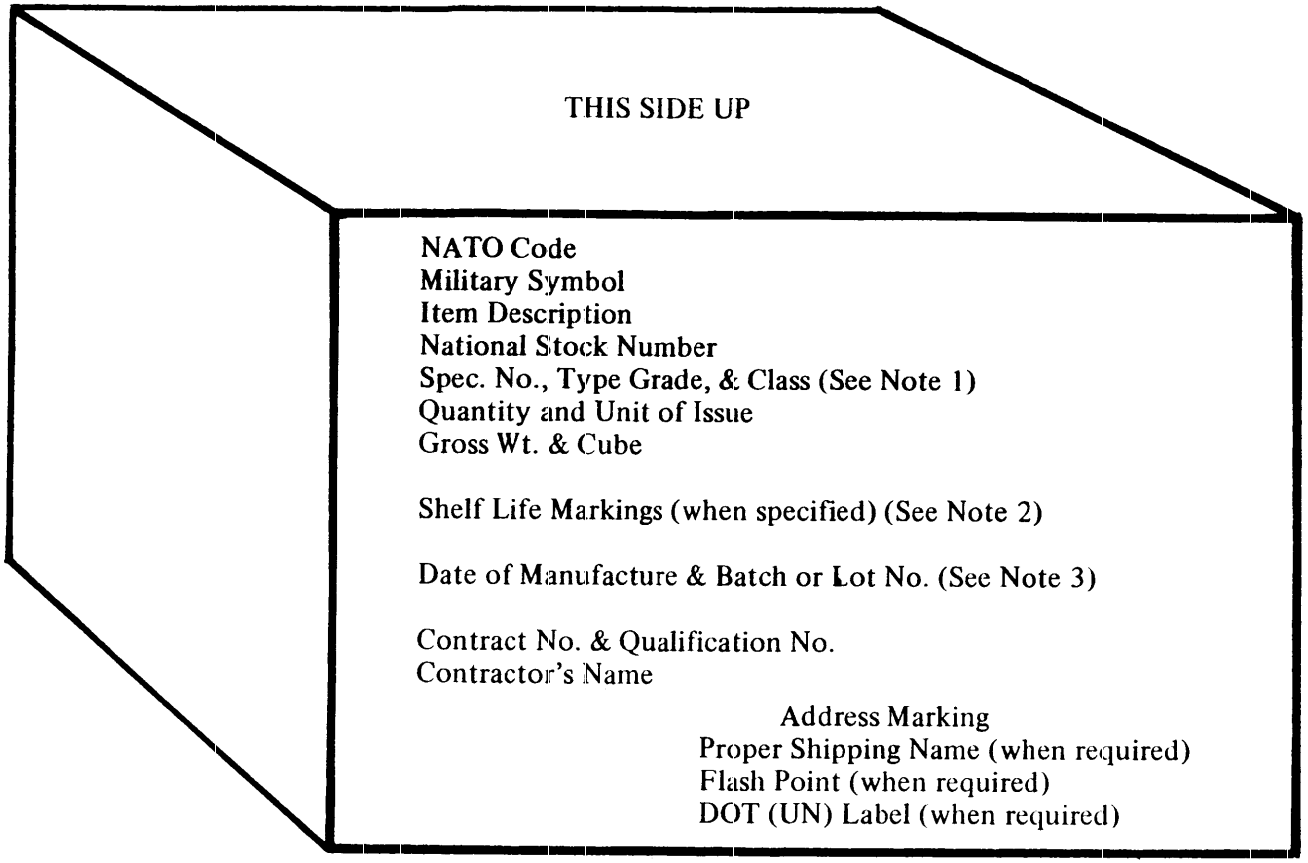

If container is too small to accommodate address label on identification marked side, apply to opposite side. When shipments are palletized, address markings are not required on individual containers.

Notes: 1 – Omit Type, Grade, and Class when the same as the Military Symbol.
2 – Shelf life markings may be placed on the end when space is not available on side.
3 – Omit Date of Manufacture when shelf life markings are specified.

The sequence and location of marking elements as shown in this figure are desirable but the sequence of data and location may be varied as required by size of markings and container size and shape.

FIGURE 5 – Marking Fiberboard Exterior Packs (Levels B and C, and Commercial)

Source: https://assist.dla.mil -- Downloaded: 2017-01-15T06:48Z
Check the source to verify that this is the current version before use.

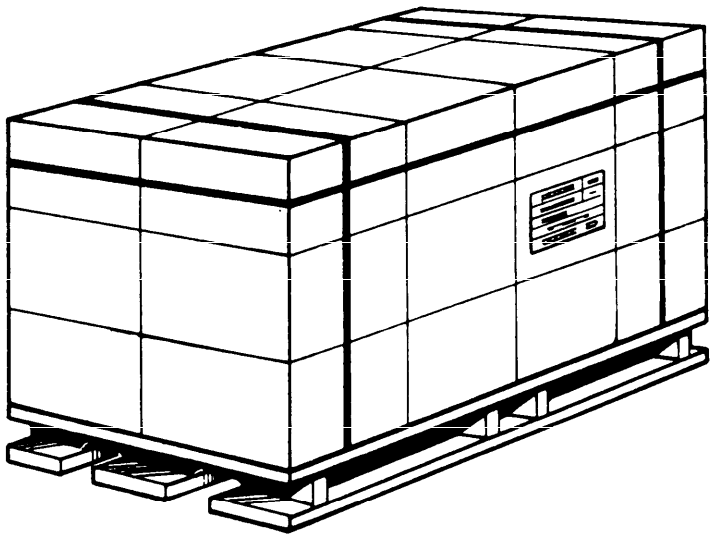

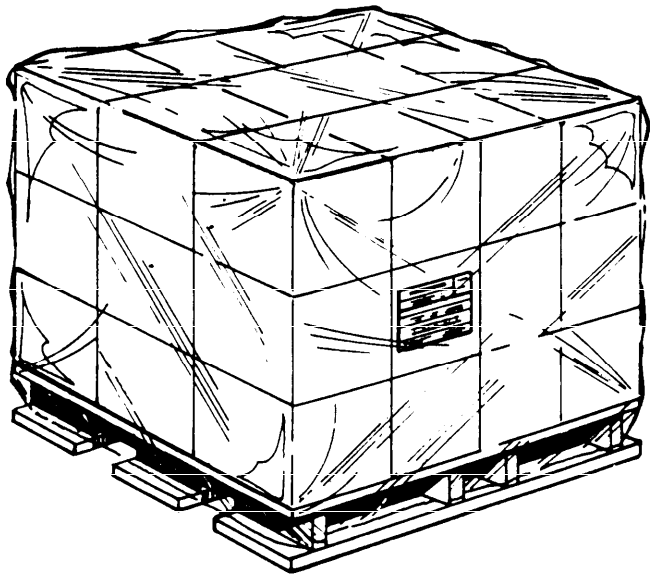

Load is built on pallet so that the identification and contract data markings on individual containers show on two adjacent sides of the load.

If a smooth surface is available, the shipment address shall be applied to the wider side of the load.

If the load does not provide a smooth surface, the address may be applied on a fiberboard panel or on a tag placed on any suitable space on the wider side of the load.

FIGURE 6 – Marking Palletized Shipments of Petroleum and Related Products

Source: https://assist.dla.mil -- Downloaded: 2017-01-15T06:48Z
Check the source to verify that this is the current version before use.

Source: https://assist.dla.mil -- Downloaded: 2017-01-15T06:48Z
Check the source to verify that this is the current version before use.

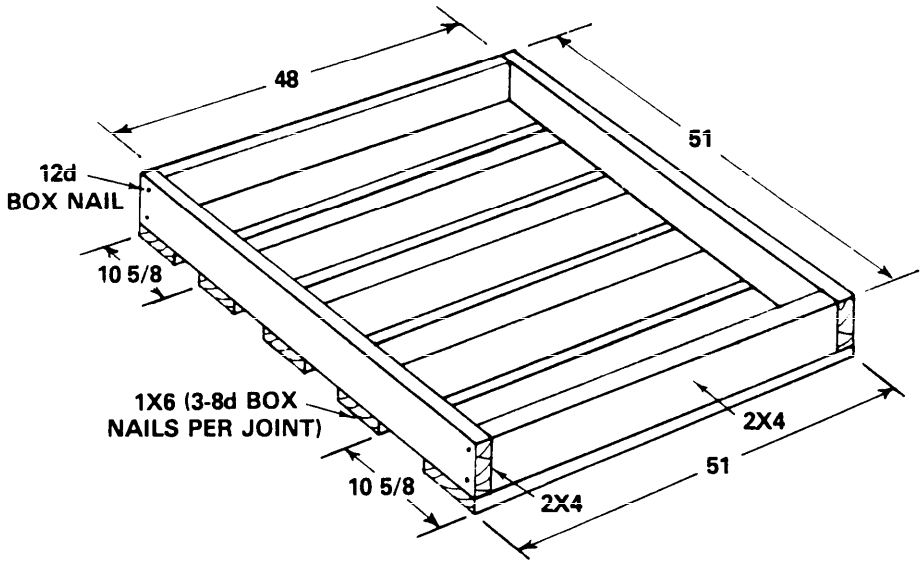

FRAME ASSEMBLY
(2 REQUIRED)

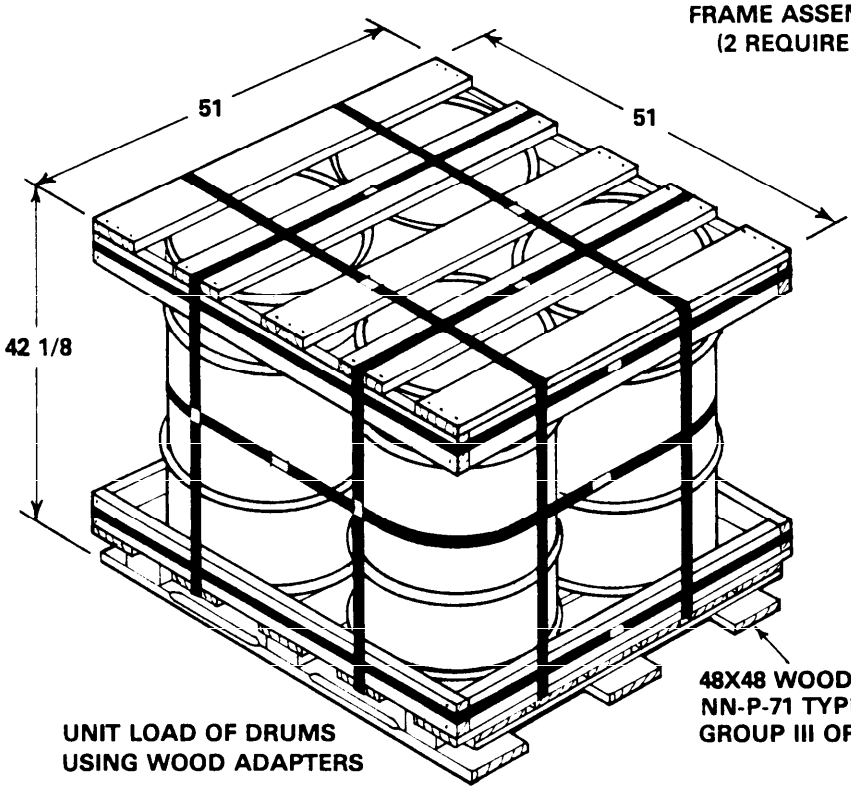

UNIT LOAD OF DRUMS
USING WOOD ADAPTERS

48X48 WOOD PALLET.
NN-P-71 TYPE II,
GROUP III OR IV WOOD

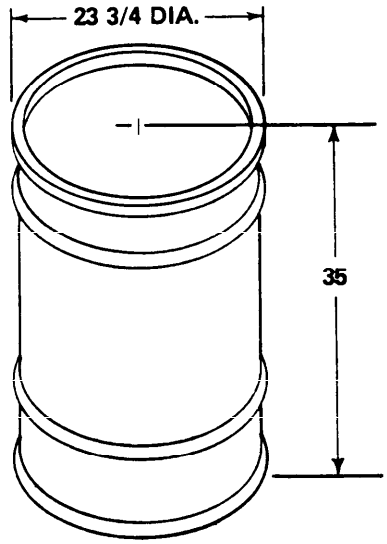

DRUM

NOTES:

1. TIE-DOWN STRAPS. Unit Loads Shall Have a Minimum of Four Tie-Down Straps with Two Straps Running the Length of the Unit Load and Two Straps Running the Width of the Unit Load.

2. STEEL STRAPPING. 3/4 Inch Strapping (QQ-S-781) Shall Be Used.

55 GALLON DRUM PALLETIZATION

FIGURE 7

Source: https://assist.dla.mil -- Downloaded: 2017-01-15T06:48Z
Check the source to verify that this is the current version before use.

TABLE I – UNIT CONTAINERS FOR PETROLEUM AND RELATED PRODUCTS

UNIT CONTAINER	SPECIFICATION REQUIREMENTS		COMMERCIAL	CLOSURE AND SEALS	COATING REQUIREMENTS
	LEVEL B	LEVEL C			
Bottles	Bottles shall be round, oblong or rounded square with sloping shoulders. Side walls shall be somewhat thicker than the shoulders. Bottle openings shall be of sufficient size to permit easy removal of contents.	Same as for level B	Bottles normally used for the product being furnished	Adequate to prevent leakage	Not Applicable
Cans, Composite with metal ends	PPP-C-1581, Class II, Type I	ANSI MH 3.4	ANSI MH 3.4		Not Applicable
Cans, metal 28 gage and lighter	PPP-C-96 Type I – Round, open top, double seamed ends Type III – Open-top double seamed ends key opening with reclosure feature Type IV – Round, square, or oblong, both ends double seamed on Type V, Class 2 – multiple friction plug Type V, Class 4 – screw cap Type V, Class 9 – Press-in closure with plastic push-pull spout Type VIII – Round, dome or cone top, both ends double seamed onto body Type IX – Pressurized Type IX, Class 1-Round can, soldered side seam, double-seamed concave top and bottom Type IX, Class 2-Round can, soldered side seam, double-seamed concave dome top with 1-inch opening Type IX, Class 3-Round can, draw seamless body & dome top with 1-in. opening & double seamed bottom Metallic Coating weight of cans shall be of minimum 1.25 pound hot dipped tinplate or minimum 0.25 pound electrolytic tinplate.	ANSI 3.1 for Round Metal Oil Cans	ANSI 3.1 for Round Metal Motor Oil Cans	Inner seals shall be furnished with closure (Type V, Class 4 of PPP-C-96) for containers of one-pint capacity or greater. Type IX cans shall be fitted with a valve designed for dispensing a surface spray. Class 2 and 3 cans shall be fitted with a cap to protect the valve. Cans containing suspending solids which may settle out shall contain a metal ball which will facilitate agitating the solids into suspension.	Exterior coating of cans (tops, bodies and bottoms) and metal screw caps shall be in accordance with the color and coating requirements in 5.9.

Source: https://assist.dla.mil -- Downloaded: 2017-01-15T06:48Z
Check the source to verify that this is the current version before use.

TABLE I – UNIT CONTAINERS FOR PETROLEUM AND RELATED PRODUCTS

UNIT CONTAINER	SPECIFICATION REQUIREMENTS		COMMERCIAL	CLOSURE AND SEALS	COATING REQUIREMENTS
	LEVEL B	LEVEL C			
	Side seams may be cemented or soldered Type 1-quart and 1-gallon cans may also have welded side seams. Type I cans shall be fabricated from minimum 35 gage (MSC) tinplate Type V, Class 4 and Class 8 or 9 cans of 1-gallon capacity shall be provided with a handle affixed to the top of the can. Cans shall be of commercial sizes as regularly supplied by the petroleum industry for the product being furnished.				
Cartridges, Grease	MIL-G-22587 except that cartridges do not have to be metal Both ends of the cartridges shall be unpainted Each cartridge shall be marked just below the removable cover "Remove cover and place this end in gun first"	ANSI MH 3.3	ANSI MH 3.3		Not applicable
Drums, steel (120 pounds grease), full-removable lug cover head	ANSI MH 2.8 – 1979	ANSI MH 2.8 1979	ANSI MH 2.8 1979	Adequate to prevent leakage. Gasket required.	The exterior coating of drums shall be in accordance with the color and coating requirements specified in 5.9. Side seams may be coated with a clear lacquer.

Source: https://assist.dla.mil -- Downloaded: 2017-01-15T06:48Z
Check the source to verify that this is the current version before use.

TABLE I – UNIT CONTAINERS FOR PETROLEUM AND RELATED PRODUCTS

UNIT CONTAINER	SPECIFICATION REQUIREMENTS		COMMERCIAL	CLOSURE AND SEALS	COATING REQUIREMENTS
	LEVEL B	LEVEL C			
Drums, steel, 16 gallon full-removable head	ANSI MH 2.14 – 1979	ANSI MH 2.14 1979	ANSI MH 2.14 1979	Adequate to prevent leakage. Gasket required.	The exterior coating of drums shall be in accordance with the color and coating requirements specified in 5.9. Side seams may be coated with a clear lacquer
Drums, steel 55 gallon closed head	ANSI MH 2.1-1979, 18 GAUGE	ANSI MH 2.1 1979	ANSI MH 2.1 1979	Adequate to prevent leakage. Drums used for MIL-L-17331 and MIL-H 17672 shall not be fitted with zinc coated closures.	For contractor-furnished drums, fog spraying of interior surfaces is not mandatory. Drums intended for filling with aviation fuels shall not have interior surfaces coated with any materials that are soluble in aviation fuels. If these drums are fog-sprayed, they must be steamed cleaned and dried before filling. Drums used for MIL-L-17331 and MIL-H-17672 shall not have interiors coated with zinc phosphate. The exterior coating of drums shall be in accordance with the color and coating requirement specified in 5.9.

Source: https://assist.dla.mil -- Downloaded: 2017-01-15T06:48Z
Check the source to verify that this is the current version before use.

TABLE II Classification of Cans and Requirements for Arrangement in Interior and Exterior Packs

Size of Cans	Number of Intermediate Packs	Arrangement of Intermediate Packs in Exterior Packs		Arrangement of Cans in Intermediate or Exterior pack		Total Number of Cans
		Floored	Layers	Floored	Layers	
Composite and Type I and VIII, round Cans						
8-ounce	2	1x2	1	4x3	3	72
1-quart	None	–	–	4x3	2	24
1-gallon	None	–	–	2x3	1	6
Type III, open-top, key-opening with reclosure feature cans						
1-pound	None	–	–	4x3	2	24
Type V, Class 2 and VIII, round cans						
4-ounce	4	1x2	2	3x2	4	96
8-ounce	6	1x2	3	3x4	1	72
1-pound	None	–	–	3x4	2	24
5-pound	None	–	–	3x2	1	6
1-pint	None	–	–	4x6	2	48
1-quart	None	–	–	4x3	2	24
1-gallon	None	–	–	2x3	1	6
Type V, Class 4, 6, 8 and 9 and VIII round and oblong cans						
2-ounce	4	1x2	2	3x8	2	192
4-ounce	4	1x2	2	4x6	1	96
8-ounce	6	1x3	2	2x6	1	72
1-pint	None	–	–	12x4	1	48
1-quart	None	–	–	4x6	1	24
1-gallon	None	–	–	2x3	1	6
Type IX, Class 1, 2, and 3. Cans, pressurized with valve						
12-ounce	2	1x2	1	4x6	1	48
16-ounce	2	1x2	1	4x6	1	48

TABLE III Packing Arrangement of Tubes, Bottles and Jars

Unit weight of contents	Intermediate pack arrangement				Exterior pack arrangement				
	No. of unit containers	Arrangements of unit containers			No. of intermediate packs	Arrangement of packs			No. of unit containers
		No. of layers	No. of rows	No. in row		No. of layers	No. of rows	No. in row	
2-ounces or less. . . .	48	2	4	6	4	1	2	2	192
4-ounces	24	1	4	6	4	2	1	2	96
6-ounces	24	1	4	6	4	2	1	2	96
8-ounces	24	1	4	6	2	2	1	1	48
1-pound.	NA	NA	NA	NA	NA	1	4	6	24
1-quart	NA	NA	NA	NA	NA	1	3	4	12

[1] If the unit quantities specified in the contract or order are by volume, they shall be converted to their corresponding weights for applying this table. Where the weight is not listed, the next higher weight given in the table shall be used.

Source: https://assist.dla.mil -- Downloaded: 2017-01-15T06:48Z
Check the source to verify that this is the current version before use.

TABLE IV. IDENTIFICATION AND CONTRACT DATA MARKING ON UNIT CONTAINERS, ONE GALLON AND LESS

UNIT CONTAINERS (ONE GALLON AND LESS)	MARKING ELEMENTS				
	LEVEL B	REFERENCE	LEVEL C	REFERENCE	COMMERCIAL
5-pound can	NATO Code (when assigned)	5.10.4.6.1	NATO Code (when assigned)	5.10.4.6.1	Markings offered by the industry will be acceptable on unit containers providing they conform to DOT Regulations
1-gallon can	Military Symbol (when assigned)	5.10.4.6.2	Military Symbol (when assigned)	5.10.4.6.2	
1-pound can	Item Description	5.10.4.6.3	Specification Number	5.10.4.6.4	
1-quart can	Specification Number	5.10.4.6.4	Type, grade, class (omit when same as Military Symbol)	5.10.4.6.5	
1-pint can	Type, grade, class (omit when same as Military Symbol)	5.10.4.6.5	Contract Number	5.10.4.6.10	
16-ounce can	National Stock Number	5.10.4.6.6	Precautionary markings (when applicable)	5.10.4.6.16	
12-ounce can	Contractor's Name	5.10.4.6.22	Flash Point (when applicable)	5.10.4.6.15	
8-ounce can	Date of Manufacture (see Note 2)	5.10.4.6.8			
4-ounce can	Batch or Lot Number (see Note 2)	5.10.4.6.9			
2-ounce can	Contract Number	5.10.4.6.10			
bottles	Qualification Number (see Note 2)	5.10.4.6.11			
jars	Net Weight	5.10.4.6.12			
collapsible tubes	Precautionary Markings (when req.)	5.10.4.6.16			
grease cartridges (see Note 1)	Flash Point (when required)	5.10.4.6.15			

NOTES: 1. Markings on cartridges shall be applied either vertically or horizontally. Each cartridge shall have an instruction just below the removable cover reading "Remove cover and place this end in gun first".
2. Date of manufacture, batch or lot number and qualification number may be marked on the top of Type I through V cans by embossing or other approved marking media.

Source: https://assist.dla.mil -- Downloaded: 2017-01-15T06:48Z
Check the source to verify that this is the current version before use.

TABLE IVa. IDENTIFICATION AND CONTRACT DATA MARKINGS ON UNIT AND INTERMEDIATE CONTAINERS (FOLDING, SETUP, AND FIBERBOARD BOXES)

MARKING ELEMENTS (LEVELS B AND C AND COMMERCIAL)	REFERENCE	SIZE
NATO Code (when assigned)	5.10.4.6.1	Legible
Military Symbol (when assigned)	5.10.4.6.2	Legible
Item Description	5.10.4.6.3	Legible
Specification Number	5.10.4.6.4	Legible
Type, grade, class (omit when same as Military Symbol)	5.10.4.6.5	Legible
National Stock Number	5.10.4.6.6	Legible
Quantity	5.10.4.6.17	Legible
Unit of Issue	5.10.4.6.18	Legible
Precautionary Marking (when required)	5.10.4.6.16	Legible
Flash Point (when required)	5.10.4.6.15	Legible

Source: https://assist.dla.mil -- Downloaded: 2017-01-15T06:48Z
Check the source to verify that this is the current version before use.

TABLE IVb. MARKINGS ON DRUMS AND PAILS: LEVELS B AND C, AND COMMERCIAL

MARKING ELEMENTS	SIZE	REFERENCE	SIDE MARKINGS			TOP MARKINGS		
			DRUMS		PAILS	DRUMS		PAILS
			CLOSED HEAD (SEE NOTE 3)	OPEN HEAD (SEE NOTE 2)		CLOSED HEAD (SEE NOTE 3)	OPEN HEAD	
NATO (when assigned)	3/4	5.10.4.6.1	X	X	X	X		
Military Symbol (when assigned)	1	5.10.4.6.2	X	X	X	X		
Item Description	1/2	5.10.4.6.3	X	X	X	X		
Specification Number	1/2	5.10.4.6.4	X	X	X	X		
Type, Grade, Class (omit when same as Military Symbol)	1/2	5.10.4.6.5	X	X	X	X		
National Stock Number	1/2	5.10.4.6.6	X	X	X	X		
Overseas Address (see Note 1)	1	5.10.4.6.19			Opposite side	X	X	
Domestic Address	1	5.10.4.6.19	X	X				X
Date of Manufacture	Legible	5.10.4.6.8	X	X	X	X		
Contractors Name	Legible	5.10.4.6.22	X	X	X			
Batch or Lot Number	Legible	5.10.4.6.9	X	X	X	X		
Contract Number	Legible	5.10.4.6.10	X	X	X	X		
Qualification Number	Legible	5.10.4.6.11		X	X			
Net Weight	Legible	5.10.4.6.12		X	X	X		
Gross Weight	Legible	5.10.4.6.20		X	X	X		
Cube	Leigible	5.10.4.6.21		X	X	X		
Shelf Life	1/2	5.10.4.6.7	X	X	Opposite side			
Precautionary Marking (when required)	1	5.10.4.6.16	X	X	Opposite side			
Flash Point (when required)	1/2	5.10.4.6.15	X	X	Opposite side			
Regulatory Markings	As required by regulation	5.10.4.6.13	X	X	Opposite side			

AN X INDICATES MARKINGS ARE REQUIRED IN THE LOCATION SHOWN

NOTE: 1. Overseas address shall be placed on side of drum opposite other side of markings if top head construction will not permit such marking.
2. When space does not permit placing required markings on the 400-pound drum between the rolling hoops, the NATO symbol and the Military symbol, when assigned, may be placed immediately above the upper rolling hoop.
3. When Level C or commercial is specified in the contract or order, side markings that duplicate markings on the closed top head of 55-gallon drums are not required.

☆U.S. GOVERNMENT PRINTING OFFICE: 1982-605-034/5268

Source: https://assist.dla.mil -- Downloaded: 2017-01-15T06:48Z
Check the source to verify that this is the current version before use.

Source: https://assist.dla.mil -- Downloaded: 2017-01-15T06:48Z
Check the source to verify that this is the current version before use.

TABLE I – UNIT CONTAINERS FOR PETROLEUM AND RELATED PRODUCTS

UNIT CONTAINER	SPECIFICATION REQUIREMENTS		COMMERCIAL	CLOSURE AND SEALS	COATING REQUIREMENTS
	LEVEL B	LEVEL C			
Drums, steel 55 gallon, open head See 5.4 for Level B and Military Air Shipment Requirements.	ANSI MH 2.5 – 1979	ANSI MH 2.5 1979	ANSI MH 2.5 1979	Adequate to prevent leakage. Gasket required.	For contractor-furnished drums, fog spraying of interior surfaces is not mandatory. The exterior coating of drums shall be in accordance with color and coating requirements specified in 5.9.
Jars	Jars shall be round, squat type, with opening wide enough to permit easy removal of all contents with a spatula	Same as for level B	Jars normally used for the product being furnished	Adequate to prevent leakage.	Not Applicable
Pails, metal fully removable cover	ANSI MH 2.15 1979	ANSI MH 2.15 1979	ANSI MH 2.15 1979	Adequate to prevent leakage. Gasket required.	The exterior coating of pails shall be in accordance with the color and coating requirements specified in 5.9.
Pails, metal tight head	PPP-P-704, Type I, Class 3, 24 gage, 1-5 gallon. Class 8 22 gage, 10 gallon. Wire handles shall be zinc coated or otherwise protectively coated to resist corrosion.	ANSI MH 2.9 1979	ANSI MH 2.9 1979	A vented closure, illustrated in figures 9, 10, 11 or 12 of PPP-P-704, or a 1-3/4" screw-cap closure equipped with an inner seal and a separate 1/2" vent tube installed directly opposite the closure shall be used. The vent will be installed by the pail manufacturer and equipped with a cap attached to the vent tube. Self-venting metal, and pull-off or pull-out self-venting polyethylene spouts are acceptable for aviation engine lubricating oils and aviation hydraulic fluids; cut-off or pop-in seals are not acceptable. Self-venting closures for products con-	The exterior coating of pails shall be in accordance with the color and coating requirements specified in 5.9.

TABLE I – UNIT CONTAINERS FOR PETROLEUM AND RELATED PRODUCTS

UNIT CONTAINER	SPECIFICATION REQUIREMENTS		COMMERCIAL	CLOSURES AND SEALS	COATING REQUIREMENTS
	LEVEL B	LEVEL C			
				forming to the following specifications shall conform to figures 9 or 10 of PPP-P-704 and need not be colored olive drab: MIL-L-2104, MIL-L-2105, MIL-L-9000, MIL-L-14107, MIL-L-21260, MIL-L-46152.	
Tubes, collapsible	PPP-T-1637, Type I – Metal, Type II – Plastic, or Type III – Laminated polyethylene-aluminum foil-paper	Same as for level B	Collapsible tubes normally used for the product being furnished	The caps shall be made from thermo-set, thermo-plastic or the same material as used for the tube.	Not Applicable

Source: https://assist.dla.mil -- Downloaded: 2017-01-15T06:48Z
Check the source to verify that this is the current version before use.

TABLE II Classification of Cans and Requirements for Arrangement in Interior and Exterior Packs

Size of Cans	Number of Intermediate Packs	Arrangement of Intermediate Packs in Exterior Packs		Arrangement of Cans in Intermediate or Exterior pack		Total Number of Cans
		Floored	Layers	Floored	Layers	
Composite and Type I and VIII, round Cans						
8-ounce	2	1x2	1	4x3	3	72
1-quart	None	–	–	4x3	2	24
1-gallon	None	–	–	2x3	1	6
Type III, open-top, key-opening with reclosure feature cans						
1-pound	None	–	–	4x3	2	24
Type V, Class 2 and VIII, round cans						
4-ounce	4	1x2	2	3x2	4	96
8-ounce	6	1x2	3	3x4	1	72
1-pound	None	–	–	3x4	2	24
5-pound	None	–	–	3x2	1	6
1-pint	None	–	–	4x6	2	48
1-quart	None	–	–	4x3	2	24
1-gallon	None	–	–	2x3	1	6
Type V, Class 4, 6, 8 and 9 and VIII round and oblong cans						
2-ounce	4	1x2	2	3x8	2	192
4-ounce	4	1x2	2	4x6	1	96
8-ounce	6	1x3	2	2x6	1	72
1-pint	None	–	–	12x4	1	48
1-quart	None	–	–	4x6	1	24
1-gallon	None	–	–	2x3	1	6
Type IX, Class 1, 2, and 3. Cans, pressurized with valve						
12-ounce	2	1x2	1	4x6	1	48
16-ounce	2	1x2	1	4x6	1	48

TABLE III Packing Arrangement of Tubes, Bottles and Jars

Intermediate pack arrangement					Exterior pack arrangement				
Unit weight of contents	No. of unit containers	Arrangements of unit containers			No. of inter-mediate packs	Arrangement of packs			No. of unit containers
		No. of layers	No. of rows	No. in row		No. of layers	No. of rows	No. in row	
2-ounces or less. . . .	48	2	4	6	4	1	2	2	192
4-ounces	24	1	4	6	4	2	1	2	96
6-ounces	24	1	4	6	4	2	1	2	96
8-ounces	24	1	4	6	2	2	1	1	48
1-pound.	NA	NA	NA	NA	NA	1	4	6	24
1-quart	NA	NA	NA	NA	NA	1	3	4	12

[1] If the unit quantities specified in the contract or order are by volume, they shall be converted to their corresponding weights for applying this table. Where the weight is not listed, the next higher weight given in the table shall be used.

Source: https://assist.dla.mil -- Downloaded: 2017-01-15T06:48Z
Check the source to verify that this is the current version before use.

TABLE IV. IDENTIFICATION AND CONTRACT DATA MARKING ON UNIT CONTAINERS, ONE GALLON AND LESS

UNIT CONTAINERS (ONE GALLON AND LESS)	MARKING ELEMENTS				
	LEVEL B	REFERENCE	LEVEL C	REFERENCE	COMMERCIAL
5-pound can	NATO Code (when assigned)	5.10.4.6.1	NATO Code (when assigned)	5.10.4.6.1	Markings offered by the industry will be acceptable on unit containers providing they conform to DOT Regulations
1-gallon can	Military Symbol (when assigned)	5.10.4.6.2	Military Symbol (when assigned)	5.10.4.6.2	
1-pound can	Item Description	5.10.4.6.3	Specification Number	5.10.4.6.4	
1-quart can	Specification Number	5.10.4.6.4	Type, grade, class (omit when same as Military Symbol)	5.10.4.6.5	
1-pint can	Type, grade, class (omit when same as Military Symbol)	5.10.4.6.5	Contract Number	5.10.4.6.10	
16-ounce can	National Stock Number	5.10.4.6.6	Precautionary markings (when applicable)	5.10.4.6.16	
12-ounce can	Contractor's Name	5.10.4.6.22	Flash Point (when applicable)	5.10.4.6.15	
8-ounce can	Date of Manufacture (see Note 2)	5.10.4.6.8			
4-ounce can	Batch or Lot Number (see Note 2)	5.10.4.6.9			
2-ounce can	Contract Number	5.10.4.6.10			
bottles	Qualification Number (see Note 2)	5.10.4.6.11			
jars	Net Weight	5.10.4.6.12			
collapsible tubes	Precautionary Markings (when req.)	5.10.4.6.16			
grease cartridges (see Note 1)	Flash Point (when required)	5.10.4.6.15			

NOTES: 1. Markings on cartridges shall be applied either vertically or horizontally. Each cartridge shall have an instruction just below the removable cover reading "Remove cover and place this end in gun first".
2. Date of manufacture, batch or lot number and qualification number may be marked on the top of Type I through V cans by embossing or other approved marking media.

Source: https://assist.dla.mil -- Downloaded: 2017-01-15T06:48Z
Check the source to verify that this is the current version before use.

TABLE IVa. IDENTIFICATION AND CONTRACT DATA MARKINGS ON UNIT AND INTERMEDIATE CONTAINERS (FOLDING, SETUP, AND FIBERBOARD BOXES)

MARKING ELEMENTS (LEVELS B AND C AND COMMERCIAL)	REFERENCE	SIZE
NATO Code (when assigned)	5.10.4.6.1	Legible
Military Symbol (when assigned)	5.10.4.6.2	Legible
Item Description	5.10.4.6.3	Legible
Specification Number	5.10.4.6.4	Legible
Type, grade, class (omit when same as Military Symbol)	5.10.4.6.5	Legible
National Stock Number	5.10.4.6.6	Legible
Quantity	5.10.4.6.17	Legible
Unit of Issue	5.10.4.6.18	Legible
Precautionary Marking (when required)	5.10.4.6.16	Legible
Flash Point (when required)	5.10.4.6.15	Legible

Source: https://assist.dla.mil -- Downloaded: 2017-01-15T06:48Z
Check the source to verify that this is the current version before use.

TABLE IVb. MARKINGS ON DRUMS AND PAILS: LEVELS B AND C, AND COMMERCIAL

MARKING ELEMENTS	SIZE	REFERENCE	SIDE MARKINGS			TOP MARKINGS		
			DRUMS		PAILS	DRUMS		PAILS
			CLOSED HEAD (SEE NOTE 3)	OPEN HEAD (SEE NOTE 2)		CLOSED HEAD (SEE NOTE 3)	OPEN HEAD	
NATO (when assigned)	3/4	5.10.4.6.1	X	X	X	X		
Military Symbol (when assigned)	1	5.10.4.6.2	X	X	X	X		
Item Description	1/2	5.10.4.6.3	X	X	X	X		
Specification Number	1/2	5.10.4.6.4	X	X	X	X		
Type, Grade, Class (omit when same as Military Symbol)	1/2	5.10.4.6.5	X	X	X	X		
National Stock Number	1/2	5.10.4.6.6	X	X	X	X		
Overseas Address (see Note 1)	1	5.10.4.6.19			Opposite side	X	X	
Domestic Address	1	5.10.4.6.19	X	X				X
Date of Manufacture	Legible	5.10.4.6.8	X	X	X	X		
Contractors Name	Legible	5.10.4.6.22	X	X	X			
Batch or Lot Number	Legible	5.10.4.6.9	X	X	X	X		
Contract Number	Legible	5.10.4.6.10	X	X	X	X		
Qualification Number	Legible	5.10.4.6.11		X	X			
Net Weight	Legible	5.10.4.6.12		X	X	X		
Gross Weight	Legible	5.10.4.6.20		X	X	X		
Cube	Leigible	5.10.4.6.21		X	X	X		
Shelf Life	1/2	5.10.4.6.7	X	X	Opposite side			
Precautionary Marking (when required)	1	5.10.4.6.16	X	X	Opposite side			
Flash Point (when required)	1/2	5.10.4.6.15	X	X	Opposite side			
Regulatory Markings	As required by regulation	5.10.4.6.13	X	X	Opposite side			

AN X INDICATES MARKINGS ARE REQUIRED IN THE LOCATION SHOWN

NOTE: 1. Overseas address shall be placed on side of drum opposite other side of markings if top head construction will not permit such marking.
2. When space does not permit placing required markings on the 400-pound drum between the rolling hoops, the NATO symbol and the Military symbol, when assigned, may be placed immediately above the upper rolling hoop.
3. When Level C or commercial is specified in the contract or order, side markings that duplicate markings on the closed top head of 55-gallon drums are not required.

Source: https://assist.dla.mil -- Downloaded: 2017-01-15T06:48Z
Check the source to verify that this is the current version before use.