NOT MEASUREMENT SENSITIVE

MIL-STD-129P
w/CHANGE 4
19 September 2007

SUPERSEDING
MIL-STD-129P
w/CHANGE 3
29 October 2004

DEPARTMENT OF DEFENSE STANDARD PRACTICE

MILITARY MARKING FOR SHIPMENT AND STORAGE

AMSC N/A

AREA PACK

Source: https://assist.dla.mil -- Downloaded: 2016-12-01T07:08Z
Check the source to verify that this is the current version before use.

FOREWORD

1. This standard is approved for use by all Departments and Agencies of the Department of Defense.

2. This standard is to be cited only for military marking for shipment and storage.

3. This standard incorporates MIL-HDBK-129.

4. Comments, suggestions, or questions on this document should be addressed to Chief, Logistics Support Activity, Packaging, Storage, and Containerization Center, ATTN: AMXLS-AT, 11 Hap Arnold Boulevard, Tobyhanna, PA 18466-5097 or e-mailed to toby.pt@us.army.mil. Since contact information can change, you may want to verify the currency of this address information using the ASSIST Online database at http://assist.daps.dla.mil.

Source: https://assist.dla.mil -- Downloaded: 2016-12-01T07:08Z
Check the source to verify that this is the current version before use.

SUMMARY OF CHANGE 4 MODIFICATIONS

The following modifications to MIL-STD-129P have been made:

Paragraph	Modification
2.2.2	Changed
2.3	Changed
3.1b	Added acronyms
3.4.1	Added
3.46.1	Deleted
3.46.2	Added
3.46.3	Added
3.46.4	Added
3.46.5	Added
3.46.6	Added
3.48	Changed
4.1	Changed
FIGURE 1	Changed
4.1.1f	Changed
4.1.1 NOTE	Changed
4.1.2 NOTE	Changed
4.2	Changed
4.2.1	Changed
4.2.2	Changed
4.2.2b	Changed
4.2.2c	Changed
4.2.2c(1)	Changed
4.2.2c(2)	Changed
4.2.2.3	Changed
4.2.2.4a	Changed
4.2.2.5a(5)	Changed
4.2.2.5a(7)	Changed
4.2.2.5a(9)	Changed
4.2.2.5a(14)	Changed
4.2.2.5a(18)	Changed
4.2.2.6a	Changed
4.2.2.6b	Changed
4.2.2.6b(2)	Changed
4.2.2.7	Changed
4.2.2.7a(5)	Changed

Source: https://assist.dla.mil -- Downloaded: 2016-12-01T07:08Z
Check the source to verify that this is the current version before use.

SUMMARY OF CHANGE 4 MODIFICATIONS (Continued)

Paragraph	Modification
4.2.2.7a(6)	Changed
4.2.2.8	Changed
4.2.3	Changed
4.3.2	Changed
4.3.2.7d	Changed
4.3.2.7d(2)	Changed
4.3.2.8	Changed
4.3.2.10	Changed
4.3.2.11	Changed
4.3.2.12	Changed
4.4	Changed
4.4.1.1	Changed
FIGURE 15	Changed
4.4.1.2	Changed
4.4.1.3	Deleted
4.4.1.4	Changed
4.4.1.5	Changed
4.4.1.6	Changed
4.4.1.6a	Changed
4.4.1.6b	Changed
4.4.1.6c	Changed
4.4.1.6d	Changed
FIGURE 16 title	Changed
FIGURE 17 title	Changed
4.4.1.7	Changed
4.4.1.8	Changed
4.4.1.9	Changed
4.4.1.10	Changed
4.4.2	Changed
4.4.2.1	Changed
4.4.2.2	Changed
4.4.2.3	Added
4.4.3	Changed
4.4.3.1	Changed
4.4.3.1a	Changed
4.4.3.1b	Changed
4.4.3.1c	Changed
4.4.3.2	Changed
FIGURE 19	Changed

Source: https://assist.dla.mil -- Downloaded: 2016-12-01T07:08Z
Check the source to verify that this is the current version before use.

SUMMARY OF CHANGE 4 MODIFICATIONS (Continued)

Paragraph	Modification
4.4.3.3	Changed
4.4.3.3.1	Added
4.4.3.4	Changed
4.4.3.5	Changed
4.4.3.6	Changed
FIGURE 22	Changed
4.4.3.6.1	Changed
4.4.3.7	Changed
4.4.3.8	Changed
4.4.3.9	Changed
4.4.3.10	Changed
4.4.3.11b	Changed
4.4.3.11c	Added
4.4.3.11d	Added
4.4.3.11e	Added
4.4.3.12	Changed
4.4.3.13	Changed
4.4.3.14	Changed
4.5	Changed
4.5a	Changed
4.6.3	Changed
4.7	Changed
4.9	Changed
4.9.1	Changed
4.9.1a	Changed
4.9.1.1	Deleted
4.9.2.1a	Changed
4.9.2.1b(2)	Changed
4.9.2.1b(3)	Changed
4.9.2.2	Changed
4.9.4	Changed
5.1.1.2	Changed
5.1.2	Changed
5.1.10	Changed
5.1.10.1	Changed
5.1.10.2	Changed
5.2.1	Changed
5.2.1a	Changed
5.2.1b	Changed

Source: https://assist.dla.mil -- Downloaded: 2016-12-01T07:08Z
Check the source to verify that this is the current version before use.

SUMMARY OF CHANGE 4 MODIFICATIONS (Continued)

Paragraph	Modification
5.2.1 NOTE	Changed
5.2.2a	Changed
5.2.10	Changed
5.2.11	Changed
FIGURE 33 title	Changed
5.2.14.1	Changed
5.2.14.2	Changed
5.2.14.3	Added
FIGURE 34	Changed
5.2.20.2	Changed
5.3	Changed
5.3.1	Changed
5.3.1a	Changed
5.3.1d	Changed
5.3.1.1	Changed
5.3.1.2	Changed
5.3.1.4	Changed
5.3.2	Changed
FIGURE 39	Changed
5.3.2.3	Changed
5.3.3a	Changed
5.4.1a(3)	Changed
5.4.2	Changed
5.5.1	Changed
5.5.2	Changed
FIGURE 40	Changed
FIGURE 41	Changed
5.5.4	Changed
5.5.5.3	Changed
5.5.5.6	Changed
5.5.6	Changed
5.5.11.3	Changed
5.5.11.4	Changed
5.6	Changed
5.6.2e	Changed
FIGURE 45	Changed
FIGURE 46	Changed
5.6.2f	Changed
5.6.2h	Changed

Source: https://assist.dla.mil -- Downloaded: 2016-12-01T07:08Z
Check the source to verify that this is the current version before use.

SUMMARY OF CHANGE 4 MODIFICATIONS (Continued)

Paragraph	Modification
5.6.5	Changed
5.6.5.1	Changed
5.6.5.2	Changed
5.6.5.2a(1)(a)	Changed
5.6.5.2a(1)(b)	Changed
5.6.5.2a(1)(c)	Changed
5.6.5.2a(1)(d)	Changed
5.6.5.2a(2)	Deleted
5.6.5.2a(3)	Deleted
5.6.5.2a(7)	Deleted
5.6.5.2b(4)	Changed
5.6.5.2b(5)	Changed
5.6.5.2b(6)	Changed
5.6.5.2c	Changed
5.6.5.2c(1)	Added
5.6.5.2c(2)	Added
5.6.5.2c(3)	Added
5.6.5.3b	Changed
5.6.5.4	Changed
6.3	Changed
TABLE I	Deleted
TABLE II	Added
TABLE IV	Changed
TABLE IV-A	Changed
TABLE IV-A Note 1	Changed
TABLE IV-B	Changed
TABLE IV-C	Changed
TABLE IV-D	Changed
TABLE IV-E	Changed
TABLE IV-E Note	Changed

Source: https://assist.dla.mil -- Downloaded: 2016-12-01T07:08Z
Check the source to verify that this is the current version before use.

THIS PAGE IS INTENTIONALLY LEFT BLANK.

Source: https://assist.dla.mil -- Downloaded: 2016-12-01T07:08Z
Check the source to verify that this is the current version before use.

CONTENTS

PARAGRAPH		PAGE
1.	SCOPE	1
1.1	Purpose	l
1.2	Applicability	1
2.	APPLICABLE DOCUMENTS	2
2.1	General	2
2.2	Government documents	2
2.2.1	Specifications, standards, and handbooks	2
2.2.2	Other Government documents and publications	3
2.3	Non-Government publications	4
2.4	Order of precedence	6
3.	DEFINITIONS	7
3.1	Abbreviations and acronyms	7
3.1.1	463L System	12
3.2	Assembly	12
3.3	Bar code	12
3.3.1	Case	12
3.4	Commercial and Government Entity (CAGE) code	12
3.4.1	Contract Line Item Number (CLIN)	12
3.5	Cognizant activity	12
3.6	Consignee (receiver)	12
3.7	Consignor (shipper)	12
3.8	Consolidation container	12
3.8.1	Consolidated shipment unit	12
3.8.2	Content level detail	13
3.9	Contract number or purchase order number (Procurement Instrument Identification Number (PIIN)	13
3.10	Defense Transportation System (DTS)	13
3.10.1	Common-user transportation	13
3.10.2	Department of Defense Activity Address Code (DoDAAC)	13
3.10.3	Government Bill of Lading (GBL)	13
3.10.4	Military Standard Requisitioning and Issue Procedures (MILSTRIP)	13
3.10.5	Electronic Product Code™ (EPC)™	13
3.10.6	Electronic Product Code Class 0 RFID tag	14
3.10.7	Electronic Product Code Class 1 RFID tag	14
3.11	Electrostatic discharge (ESD) sensitive devices	14
3.12	Exterior container	14

Source: https://assist.dla.mil -- Downloaded: 2016-12-01T07:08Z
Check the source to verify that this is the current version before use.

CONTENTS

PARAGRAPH PAGE

3.13 Hardness Critical Item (HCI) 14
3.14 Hazardous materials 14
3.15 Human-readable interpretation (HRI) 14
3.16 Interior container 14
3.17 Intermediate container 14
3.18 Item description (nomenclature) 14
3.19 Levels of protection 15
3.19.1 Military preservation 15
3.19.2 Military levels of packing 15
3.20 Loose or unpacked item 15
3.21 Lot, batch, or identification control number 15
3.22 Military methods of preservation/preservation date 15
3.23 Modification work order (MWO) 15
3.24 National/NATO stock number (NSN) 15
3.25 Packaging 15
3.26 Packing 15
3.27 Palletized unit load 16
3.28 Parcel post 16
3.28.1 Passive radio frequency identification (RFID) tag 16
3.29 Polychlorinated biphenyl (PCB) 16
3.30 Port of debarkation (POD) 16
3.31 Port of embarkation (POE) 16
3.32 Preservation 16
3.33 Project code 16
3.34 Proper shipping name (PSN) 16
3.35 Protected cargo 16
3.35.1 Classified items 16
3.35.2 Controlled items 16
3.35.3 Pilferable items 17
3.35.4 Sensitive items 17
3.36 Quantity per unit pack (QUP) 17
3.36.1 Radio Frequency Identification (RFID) 17
3.37 Radioactive material 17
3.38 Required delivery date (RDD) 17
3.39 Security Assistance 17
3.40 Serial number 17
3.41 Shelf-life 17
3.41.1 Assembled date 17
3.41.2 Cured date 18

Source: https://assist.dla.mil -- Downloaded: 2016-12-01T07:08Z
Check the source to verify that this is the current version before use.

CONTENTS

PARAGRAPH PAGE

3.41.3 Expiration date 18
3.41.4 Inspect/test date 18
3.41.5 Manufactured date 18
3.41.6 Packed date 18
3.42 Shelf-life code (SLC) 18
3.43 Shelf-life item 18
3.43.1 Type I shelf-life item 18
3.43.2 Type II shelf-life item 18
3.44 Shipping container 18
3.45 Supply Condition Codes for Shelf-Life Items 19
3.46 Transportation Control Number (TCN) 19
3.46.1 Unique Identification (UID) 19
3.46.2 Item Unique Identification (IUID) 19
3.46.3 Unique Item Identifier (UII) 19
3.46.4 IUID equivalent 19
3.46.5 Concatenated UII 19
3.46.6 Item 19
3.47 Unit of issue (UI) 19
3.47.1 Definitive unit of issue 19
3.47.2 Nondefinitive unit of issue 19
3.47.3 Quantitative expression 20
3.48 Unit pack 20
3.49 Warranty markings 20

4. GENERAL REQUIREMENTS 21
4.1 Identification markings 21
4.1.1 Identification marking information on unit packs and intermediate containers 22
4.1.2 Identification marking information on exterior containers and unpacked items ... 23
4.1.2.1 Marking for assorted items 24
4.1.2.1.1 Related items 24
4.1.2.1.2 Unrelated items (multipacks) 25
4.2 Address markings 25
4.2.1 Military (DoD) and contractor- or vendor-originated address markings 25
4.2.2 Military Shipping Label (MSL) 26
4.2.2.1 MSL size 27
4.2.2.2 MSL stock quality 27
4.2.2.3 MSL format 27

Source: https://assist.dla.mil -- Downloaded: 2016-12-01T07:08Z
Check the source to verify that this is the current version before use.

CONTENTS

PARAGRAPH PAGE

4.2.2.4 Completing the MSL…… 29
4.2.2.5 Data content of the MSL…….....… 29
4.2.2.6 MSL 2D (PDF417) symbol coding requirements…… 32
4.2.2.7 MSL bar code symbol printing standards.....… 33
4.2.2.8 Human readable interpretation (HRI)…….. 34
4.2.3 DoD shipments sent through the U.S. Postal Service and commercial parcel services (Fed-Ex)…… 34
4.3 Placement of identification and address markings…….. 34
4.3.1 Placement of identification and address markings on unit packs and intermediate containers ……..…… 34
4.3.2 Placement of identification and address markings on exterior shipping containers, palletized unit loads, and unpacked items …… 35
4.3.2.1 Boxes and crates…… 37
4.3.2.2 Bales and cloth-covered bundles…… 37
4.3.2.3 Paper shipping sacks, bags, and textile/laminated textile bags….....….. 38
4.3.2.4 Barrels, drums, and other cylindrical containers (including empty containers)…. .....… 38
4.3.2.5 Miscellaneous articles and unpacked items such as spools, reels, rods, coils of wire and cable, and paper- and cloth-wrapped rolls…….…… 39
4.3.2.6 Unpacked major equipment (except unpacked vehicles)…… 40
4.3.2.7 Palletized unit load…… 41
4.3.2.8 Wood products…… 42
4.3.2.8.1 Bundled wood products…… 42
4.3.2.8.2 Unstrapped (loose) wood products (piles, poles, etc.)…… 44
4.3.2.8.3 Miscellaneous wood products in containers (doors, windows, and moldings) …… 45
4.3.2.9 Unpacked vehicles…… 45
4.3.2.10 Commercial- or Government-owned (or –leased) shipping containers (SEAVANS) and military-owned demountable containers (MILVANS)……. 45
4.3.2.11 Full rail carload and full truckload shipments…… 46
4.3.2.12 Less than rail carload and less than truckload (LTL) shipments…… 46
4.3.2.13 Tires (loose)…….. 46
4.3.2.14 Tubular products (loose)……..……. 47
4.3.2.15 Tubular products (bundles and lifts)……. 47
4.4 Identification linear (Code 39) and 2D(PDF417) bar code markings (non-ammunition) containers ……. 47
4.4.1 Content specifications and application techniques (non-ammunition)…… 48
4.4.1.1 Identification linear (Code 39) and 2D (PDF417) bar code label content for unit packs and intermediate containers..... 48

Source: https://assist.dla.mil -- Downloaded: 2016-12-01T07:08Z
Check the source to verify that this is the current version before use.

CONTENTS

PARAGRAPH PAGE

4.4.1.2 Identification linear (Code 39) and 2D (PDF417) bar code label content for exterior containers 49
4.4.1.3 Linear (Code 39) bar code symbology..... 50
4.4.1.4 Identification bar code configurations and basic message formats..... 50
4.4.1.5 Complex identification linear (Code 39) bar code formats..... 50
4.4.1.6 Identification linear (Code 39) bar code format information..... 50
4.4.1.7 Applying identification linear (Code 39) and 2D (PDF417) bar codes on containers (other than wood) 52
4.4.1.8 Applying identification linear (Code 39) and 2D (PDF417) bar codes on wood containers..... 53
4.4.1.9 Identification linear (Code 39) and 2D (PDF417) bar code labels on unit packs and intermediate containers..... 53
4.4.1.10 Identification linear (Code 39) and 2D (PDF417) bar code labels on exterior shipping containers..... 53
4.4.2 Placement of identification linear (Code 39) and 2D (PDF417) bar code markings on unit packs and intermediate containers.....53
4.4.2.1 Identification linear (Code 39) and 2D (PDF417) bar code markings on transparent containers..... 54
4.4.2.2 Identification linear (Code 39) and 2D (PDF417) bar code serial numbers on unit packs and intermediate containers..... 54
4.4.2.3 Identification using machine readable symbology for Unique Item Identifiers (UII) on unit packs and intermediate containers.....54
4.4.3 Placement of identification linear (Code 39) bar code markings on exterior shipping containers.....54
4.4.3.1 Formats for identification of linear (Code 39) bar code data on exterior shipping containers.....54
4.4.3.2 Formats for linear (Code 39) identification bar code tags to be used with exterior shipping containers.....55
4.4.3.3 Identification linear (Code 39) and 2D (PDF417) bar code serial numbers on exterior shipping containers..... 57
4.4.3.3.1 Identification using machine readable symbology for Unique Item Identifiers (UII) or exterior shipping containers 57
4.4.3.4 Boxes and crates under 10 cubic feet and those 10 cubic feet and over..... 58
4.4.3.5 Bales, cloth-covered bundles, paper shipping sacks, bags and textile/laminated textile bags, rods, shafts, pipes and coils of wire 58
4.4.3.6 Barrels, drums, and other cylindrical containers..... 59
4.4.3.6.1 Markings on the tops of barrels, drums, and other cylindrical containers..... 61
4.4.3.7 Reels or spools of cable, wire, and rope..... 61
4.4.3.8 Paper- and cloth-wrapped rolls..... 61

Source: https://assist.dla.mil -- Downloaded: 2016-12-01T07:08Z
Check the source to verify that this is the current version before use.

CONTENTS

PARAGRAPH PAGE

4.4.3.9 Palletized unit loads…… 61
4.4.3.10 Unpacked major equipment (skidded or unskidded)…… 63
4.4.3.11 Multipacks…… 64
4.4.3.12 Sets, kits, and outfits (SKO)…… 65
4.4.3.13 Materiel destined for resale …….…….. 65
4.4.3.14 Protected cargo (controlled, sensitive, classified, and pilferable items)……..…… 65
4.4.3.15 Bundled wood products ..…… 65
4.4.3.16 Small arms weapons container labels……..……..……. 65
4.5 Direct vendor delivery (DVD) ……..…….. 66
4.6 Foreign Military Sales (FMS) marking requirements 66
4.6.1 Minimum package size 66
4.6.2 Multipacks 66
4.6.3 Contractor-originated FMS shipments 67
4.6.4 DoD originated FMS shipments 67
4.7 Shipments to North Atlantic Treaty Organization (NATO) countries or shipments using NATO carriers 68
4.8 Marking for specific commodities…….. 68
4.8.1 Household goods……. 68
4.8.2 Medical material …… 68
4.8.3 Subsistence …… 68
4.8.4 Bulk cargo ……. 68
4.8.5 Petroleum products …….. 68
4.9 Passive Radio Frequency Identification (RFID) …… 68
4.9.1 Passive RFID tag technical requirements ……. 68
4.9.1.1 Passive RFID tag/interrogator readability requirements ..…… 68
4.9.1.2 Passive RFID tag data specifications …… 69
4.9.1.3 Passive RFID tag frequency ……. 69
4.9.2 Passive RFID tag placement ……. 69
4.9.2.1 Individual shipping container or palletized unit load …… 69
4.9.2.2 Unit, intermediate and exterior containers within a palletized unit load …… 70
4.9.3 Tagging munitions/explosives with passive RFID …….. 70
4.9.4 Electronic data interchange (EDI) transactions …… 70

5. DETAILED REQUIREMENTS 71
5.1 Markings, marking materials and methods 71
5.1.1 Marking materials 71
5.1.1.1 Waterproofing materials used as protective coatings 71

Source: https://assist.dla.mil -- Downloaded: 2016-12-01T07:08Z
Check the source to verify that this is the current version before use.

CONTENTS

PARAGRAPH		PAGE
5.1.1.2	Stencil-marking material	71
5.1.1.3	Obliterating lacquer, enamel, or paint	71
5.1.1.4	Lithographing, embossing, roller coating, or stamping	71
5.1.2	Labels, paper, pressure-sensitive, water-resistant	71
5.1.2.1	Use of labels	72
5.1.2.2	Protective coating of labels	72
5.1.2.3	Affixing and securing paper labels (except for labels on vehicles and related equipment	72
5.1.3	Tags	72
5.1.4	Water-resistant envelopes	72
5.1.5	Conditions of surfaces to be marked	72
5.1.6	Legibility, durability, and color of markings	72
5.1.7	Methods of marking unit packs, intermediate and exterior containers, and loose or unpacked items	72
5.1.8	Marking board or marking panel	73
5.1.9	Size of markings	73
5.1.10	Identification bar code machine-readable markings	73
5.1.10.1	Linear (Code 39) bar code symbology	73
5.1.10.2	Two-dimensional (2D) (PDF417) symbols	73
5.2	Special markings	73
5.2.1	Shelf-life markings	73
5.2.1.1	DD Form 2477 Series (Extended Shelf-Life Notice)	74
5.2.2	Project code markings	75
5.2.3	Transportation special handling/ protective services	76
5.2.4	Structural markings	76
5.2.5	Valuable and security items	76
5.2.6	Special handling, including arrows and FRAGILE/DELICATE markings	77
5.2.6.1	Legend “USE NO HOOKS”	77
5.2.6.2	Arrows	80
5.2.7	Pictorial symbols for marking	80
5.2.8	Warranty markings	80
5.2.9	Lag bolt caution marking	80
5.2.10	Method 50	80
5.2.11	Magnetized material	81
5.2.12	Engineering or technical order changes or modifications	81
5.2.13	Lot, batch, or identification control numbers	81
5.2.14	Set or assembly markings	81
5.2.14.1	Set or assembly marking for component parts of disassembled items	83

Source: https://assist.dla.mil -- Downloaded: 2016-12-01T07:08Z
Check the source to verify that this is the current version before use.

CONTENTS

PARAGRAPH PAGE

5.2.14.2 Single stock-numbered and part-numbered sets 83
5.2.14.3 Single stock-numbered and part numbered sets with different stock numbered parts……..83
5.2.15 Consolidation containers 84
5.2.16 Expedited handling - not mission capable supply (NMCS) and 999 84
5.2.17 Center of balance and lifting and tiedown points…… 84
5.2.18 Load bearing areas and lift points…… 85
5.2.19 Axle weight markings…… 85
5.2.20 Electrostatic discharge (ESD) sensitive devices 86
5.2.20.1 Unit packs 86
5.2.20.2 Intermediate and exterior containers 86
5.2.21 Materiel condition markings…….. 87
5.2.22 Hardness Critical Item (HCI) 88
5.3 Exterior container documentation 88
5.3.1 Packing lists..... 89
5.3.1.1 Packing list – multiple container shipments……. 89
5.3.1.2 DD Form 250 (Materiel Inspection and Receiving Report) 90
5.3.1.3 DD Form 1155 (Order for Supplies or Services/Request for Quotation) 90
5.3.1.4 Application of packing lists 90
5.3.1.5 DD Form 1384 (Transportation and Control Movement Document (TCMD)) … 90
5.3.1.6 DD Form 1149 (Requisition and Invoice Shipping Document) …… 90
5.3.2 DD Form 1348-1A 90
5.3.2.1 Shipment units of single-line items 90
5.3.2.2 Shipment units of multiple-line items 91
5.3.2.3 Alternate method of attaching DD Forms 1348-1A and APLs to fiberboard boxes 91
5.3.2.4 Method of attaching accompanying documentation for shipments of vehicles 92
5.3.3 Exceptions to the use of exterior container documentation 92
5.4 DD Form 1348-1A bar code data requirements ……..... 92
5.4.1 DD Form 1348-1A linear (Code 39) bar codes……..... 92
5.4.2 DD Form 1348-1A 2D (PDF417) bar code ……..... 93
5.5 Hazardous materials (HAZMAT) 94
5.5.1 HAZMAT marking and labeling requirements 94
5.5.2 Proper shipping name and identification number…….. 94
5.5.3 Marking and labeling of multipacks containing HAZMAT 94
5.5.4 Marking and labeling of air and water shipments 95
5.5.5 Identifying containers and packagings 96
5.5.5.1 DOT specification and UN performance specification (certification) markings.. 96

Source: https://assist.dla.mil -- Downloaded: 2016-12-01T07:08Z
Check the source to verify that this is the current version before use.

CONTENTS

PARAGRAPH PAGE

5.5.5.2 Specialized containers 96
5.5.5.3 DOT special permits (SPs)..... 97
5.5.5.4 Certification of Equivalency (COE) 97
5.5.5.5 Competent Authority Approval (CAA) 97
5.5.5.6 Overpack/multipack containers..... 97
5.5.6 Documentation for HAZMAT..... 97
5.5.6.1 Existing palletized unit loads of HAZMAT 99
5.5.7 Flash point marking 99
5.5.8 Specific hazards 99
5.5.8.1 Asbestos 99
5.5.8.2 Polychlorinated biphenyls (PCBs) 99
5.5.9 Hazardous chemical warning label 100
5.5.10 Kits containing HAZMAT 100
5.5.11 Radioactive material marking and labeling requirements 100
5.5.11.1 Nuclear Regulatory Commission (NRC) interior/storage container label 101
5.5.11.2 Radioactive materials requiring an NRC label 101
5.5.11.3 Transportation of radioactive materials 101
5.5.11.4 Exceptions to the use of radioactive material labels 101
5.6 Ammunition and explosives..... 102
5.6.1 Identification markings on unit packs, intermediate containers, and unpacked items..... 102
5.6.2 Identification markings on exterior containers..... 103
5.6.3 Identification markings on empty containers..... 105
5.6.4 Identification markings on unit load pallets 106
5.6.4.1 Content of unit load identification markings..... 106
5.6.4.2 Application of identification markings..... 106
5.6.5 Identification bar code symbol marking requirements..... 110
5.6.5.1 Identification bar code label specifications..... 110
5.6.5.2 Identification bar code symbol data structure..... 111
5.6.5.3 Identification bar code human readable information..... 113
5.6.5.4 Use of multiple labels for large data requirements..... 114
5.6.5.5 Location and application of the identification bar code symbol label..... 114
5.6.6 Address markings..... 115
5.6.7 Order of precedence..... 116

6. NOTES 116
6.1 Intended use 116
6.2 Subject term (key word) listing 116

Source: https://assist.dla.mil -- Downloaded: 2016-12-01T07:08Z
Check the source to verify that this is the current version before use.

CONTENTS

PARAGRAPH PAGE

6.3 International interest 117
6.4 Changes from previous issue 117
6.5 Sizes of forms used 117
6.6 Desiccated unit pack label 117
6.7 Chemical agent resistant coatings (CARC) 117

TABLES PAGE

I Supply-type Labels..... 118
II Shelf-Life Codes..... 119
III Application of Supply Condition Codes to Shelf-Life Items 120
IV Technical Details for 2D (PDF417) Symbology..... 121
IV-A 2D Symbol Data Descriptions.....125
IV-B MSL Generic Cargo 2D Symbol Format.....133
IV-C MSL Unit Move 2D Symbol Format.....137
IV-D Unit Pack and Container ID 2D Symbol Format.....140
IV-E Label 1 of 2 Ammunition/Explosive Marking 2D Symbol Format..... 141
Label 2 of 2 Ammunition/Explosive Marking 2D Symbol Format.....143

CONCLUDING MATERIAL 145

Source: https://assist.dla.mil -- Downloaded: 2016-12-01T07:08Z
Check the source to verify that this is the current version before use.

1. SCOPE

1.1 Purpose. This standard provides the minimum requirements for uniform military marking for shipment and storage. Additional markings may be required by the contract or the cognizant activity.

1.2 Applicability. The marking of shipments of supplies, equipment, and ammunition will be as specified in this standard. Marking is "the application of numbers, letters, labels, tags, symbols, or colors to provide identification and to expedite handling during shipment and storage."

Source: https://assist.dla.mil -- Downloaded: 2016-12-01T07:08Z
Check the source to verify that this is the current version before use.

2. APPLICABLE DOCUMENTS

2.1 General. The documents listed in this section are specified in sections 3, 4, and 5 of this standard. This section does not include documents cited in other sections of this standard or recommended for additional information or as examples. While every effort has been made to ensure the completeness of this list, document users are cautioned that they meet all specified requirements documents cited in sections 3, 4, and 5 of this standard, whether or not they are listed.

2.2 Government documents.

2.2.1 Specifications, standards, and handbooks. The following specifications, standards, and handbooks form a part of this document to the extent specified herein. Unless otherwise specified, the issues of these documents are those listed in the issue of the Department of Defense Index of Specifications and Standards (DoDISS) and supplement thereto, cited in the solicitation.

SPECIFICATIONS

MILITARY

MIL-DTL-4 - Tires and Inner Tubes (Non-Aircraft); Packaging of
MIL-C-46168 - Coating, Aliphatic Polyurethane, Chemical Agent Resistant
MIL-C-53039 - Coating, Aliphatic Polyurethane, Single Component, Chemical Agent Resistant
MIL-PRF-61002 - Pressure-sensitive Adhesive Labels for Bar Coding
MIL-DTL-64159 - Coating, Water Dispersible Aliphatic Polyurethane, Chemical Agent Resistant

STANDARDS

FEDERAL

FED-STD-595 - Colors Used in Government Procurement

MILITARY

MIL-STD-290 - Packaging of Petroleum and Related Products
MIL-STD-2073-1 - Standard Practice for Military Packaging
MIL-STD-130 - Standard Practice for Identification Marking of U.S. Military Property

(Copies of these documents are available online at http://assist.daps.dla.mil or http://assist.daps.dla.mil/quicksearch or from the Standardization Document Order Desk, 700 Robbins Avenue, Building 4D, Philadelphia, PA 19111-5094.)

Source: https://assist.dla.mil -- Downloaded: 2016-12-01T07:08Z
Check the source to verify that this is the current version before use.

2.2.2 Other Government documents and publications. The following other Government documents and publications form a part of this document to the extent specified herein. Unless otherwise specified, issues are those cited in the solicitation.

CODE OF FEDERAL REGULATIONS (CFR)

Title 10 CFR	-	Energy
Title 29 CFR	-	Labor
Title 40 CFR	-	Protection of Environment
Title 49 CFR	-	Transportation

DEFENSE FEDERAL ACQUISITION REGULATION (DFAR)

DEFENSE FEDERAL ACQUISITION REGULATION SUPPLEMENT (DFARS)

(Application for copies should be addressed to Superintendent of Documents, U.S. Government Printing Office, Washington, DC 20402.)

JOINT MILITARY

AFMAN 24-204(I)/TM 38-250/ NAVSUP PUB 505/MCO P4030.19I/DLAI 4145.3/ DCMAD1, CH3.4 (HM24)	- Preparing Hazardous Materials for Military Air Shipments
DLAD 4145.41/AR 700-143/ AFJI 24-210/NAVSUPINST 4030.55B/MCO 4030.40B	- Packaging of Hazardous Material
TM 38-400/NAVSUP PUB 572/ AFMAN 23-210/MCO 4450.14/ DLAM 4145.12	- Storage and Materials Handling

DoD REGULATIONS, MANUALS, AND HANDBOOKS

DoD 4000.25-1-M	- Military Standard Requisitioning and Issue Procedures (MILSTRIP)
DoD 4140.27-M	- Shelf-Life Management Manual
DoD 4500.9-R	- Defense Transportation Regulation (DTR)

(Joint military publications and DoD regulations and manuals listed are available through the applicable Service/Agency publications distribution office. Non-DoD activities can obtain copies of the publications from the Defense Logistics Agency, ATTN: DSS-CV, 8725 John J. Kingman Road, Fort Belvoir, VA 22060-6221.) DoD 4000.25-1-M is available electronically through http://www.dla.mil/j-6/dlmso. DoD 4500.9-R is available through http://www.dtic.mil/whs/directives/corres/html/45009r.htm.

Source: https://assist.dla.mil -- Downloaded: 2016-12-01T07:08Z
Check the source to verify that this is the current version before use.

NORTH ATLANTIC TREATY ORGANIZATION (NATO)

STANAG 2233 - NATO Consignment and Asset Tracking by Radio Frequency Identification
STANAG 4281 - NATO Standard Marking for Shipment and Storage
STANAG 4329 - NATO Standard Bar Code Symbology

AMERICAN, BRITISH, CANADIAN, AND AUSTRALIAN (ABCA)

QSTAG 1152 - Bar Code Symbology
QSTAG 1154 - Standard Marking for Shipment and Storage

(Copies of Standardization Agreements (STANAGs) and Quadripartite Standardization Agreements (QSTAGs) are available at http://assist.daps.dla.mil or http://assist.daps.dla.mil/quicksearch or from the Standardization Document Order Desk, 700 Robbins Avenue, Building 4D, Philadelphia, PA 19111-5094.)

RADIO FREQUENCY IDENTIFICATION (RFID) AND UNIQUE ITEM IDENTIFIER (UII) DOCUMENTS

DoD Suppliers' Passive RFID Information Guide
Supplier Implementation Plan
DoD Guide to Uniquely Identifying Items

(Copies of the RFID Information Guide and Implementation Plan are available at http://www.acq.osd.mil/log/rfid/index.htm. The UII Guide is available at http://www.acq.osd.mil/dpap/UID.)

OTHER

Medical Marking Standard No. 1
DSCP Form 3556 - Marking Instructions for Boxes, Sacks, and Unit Loads of Perishable and Semiperishable Subsistence

(Copies of Medical Marking Standard No. 1 are available from Defense Supply Center Philadelphia, ATTN: DSCP-FSFB (Packaging), 700 Robbins Avenue – Bldg 6A South, Philadelphia, PA 19111-5092 or through http://www.dscc.dla.mil/downloads/packaging/MMS1.pdf. Copies of DSCP Form 3556 are available from the same address at ATTN: DSCP-HSL, Bldg 6 or through http://www.dscp.dla.mil/subs/support/specs/forms/3556.pdf.)

2.3 Non-Government publications. The following documents form a part of this document to the extent specified herein. Unless otherwise specified, the issues of documents are those cited in the solicitation or contract.

Source: https://assist.dla.mil -- Downloaded: 2016-12-01T07:08Z
Check the source to verify that this is the current version before use.

ASTM INTERNATIONAL

ASTM D 882	-	Standard Test Method for Tensile Properties of Thin Plastic Sheeting
ASTM D 996	-	Standard Terminology of Packaging and Distribution Environments
ASTM D 2582	-	Standard Test Method for Puncture-Propagation Tear Resistance of Plastic Film and Thin Sheeting
ASTM D 3951	-	Standard Practice for Commercial Packaging
ASTM D 3953	-	Standard Specification for Strapping, Flat Steel and Seals
ASTM D 4675	-	Standard Guide for Selection and Use of Flat Strapping Materials
ASTM D 5445	-	Standard Practice for Pictorial Markings for Handling of Goods
ASTM D 5486/ D 5486M	-	Standard Specification For Pressure Sensitive Tape For Packaging, Box Closure, and Sealing

(Application for copies should be addressed to ASTM International, 100 Barr Harbor Drive, West Conshohocken, PA 19428-2959 or through www.astm.org.)

AMERICAN NATIONAL STANDARDS INSTITUTE (ANSI)
INTERNATIONAL ORGANIZATION STANDARDS (ISO)
INTERNATIONAL ELECTROTECHNICAL COMMITTEE (IEC)

ANSI MH10.8.6	-	Bar Codes and Two-Dimensional (2D) Symbols for Product Packaging
ANSI X12.3	-	Data Element Dictionary
MHIA MH10.8.1	-	Linear Bar Code and Two-Dimensional Symbols Used in Shipping, Receiving, and Transport Applications
MHIA MH10.8.2	-	Data Application Identifier Standard
ISO/IEC 15415	-	Information Technology – Automatic Identification and Data Capture Techniques – Bar Code Print Quality Test Specification – Two-Dimensional Symbols
ISO/IEC 15416	-	Information Technology – Automatic Identification and Data Capture Techniques - Bar Code Print Quality Test Specification – Linear Symbols
ISO/IEC 15434	-	Information Technology – Automatic Identification and Data Capture Techniques - Syntax for High-Capacity ADC Media
ISO/IEC 15438	-	Information Technology - Automatic Identification and Data Capture Techniques - Bar Code Symbology Specification – PDF417
ISO/IEC 16388	-	Information Technology - Automatic Identification and Data Capture Techniques - Bar Code Symbology Specification – Code 39

Source: https://assist.dla.mil -- Downloaded: 2016-12-01T07:08Z
Check the source to verify that this is the current version before use.

(Application for ANSI or ISO/IEC hard copies should be addressed to Global Engineering Documents, 15 Inverness Way East, Englewood, Colorado 80112-5776. Electronic copies are available through http://global.ihs.com or www.ansi.org.)

(Application for MHIA hard copies should be addressed to Material Handling Industry Professional, 8720 Red Oak Boulevard, Suite 201, Charlotte, NC 28217-3992. Electronic copies are available through http://www.mhia.org.)

INTERNATIONAL AIR TRANSPORT ASSOCIATION (IATA)

Dangerous Goods Regulations

(Application for hard copies should be addressed to International Transport Association, 2000 Peel Street, Montreal, Quebec, Canada H3A 2R4.)

INTERNATIONAL CIVIL AVIATION ORGANIZATION (ICAO)

Technical Instructions for the Safe Transportation of Dangerous Goods by Air

(Application for copies should be addressed to International Regulations Publishing and Distributing Organization, P.O. Box 60105, Chicago, IL 60660.)

INTERNATIONAL MARITIME ORGANIZATION (IMO)

International Maritime Dangerous Goods (IMDG) Code

(Application for copies should be addressed to International Maritime Organization, 4 Albert Embankment, London SE1 7SR, England.)

(Non-Government standards and other publications are normally available from the organizations that prepare or distribute the documents. These documents also may be available in or through libraries or other informational services.)

2.4 Order of precedence. In the event of a conflict between the text of this document and the references cited herein, the text of this document takes precedence. Nothing in this document, however, supersedes applicable laws and regulations unless a specific exemption has been obtained.

Source: https://assist.dla.mil -- Downloaded: 2016-12-01T07:08Z
Check the source to verify that this is the current version before use.

3. DEFINITIONS

General packaging definitions may be found in ASTM D 996 and other referenced documents. Hazardous materials definitions are listed in Title 49 CFR, Parts 171 and 173, and in other related publications.

3.1 Abbreviations and acronyms. The following abbreviations and acronyms are used in this standard or are commonly associated with marking. Bar code symbol abbreviations will be in accordance with the standards or documents cited for use.

a. Unit of issue (UI) abbreviations. The following is a sample of UI abbreviations. The correct UI for marking is the UI shown in the contract or purchase order. Commonly used Data Identifier UIs are listed in ANSI X12.3.

AM Ampoule
AY Assembly
BA Ball
BD Bundle
BE Bale
BF Board foot
BG Bag
BK Book
BL Barrel
BO Bolt
BR Bar
BT Bottle
BU Bushel
BX Box
CA Cartridge
CB Carboy
CD Cubic yard
CE Cone
CF Cubic foot
CI Cubic inch
CK Cake
CL Coil
CM Cubic meter
CN Can
CO Container
CR Crate
CS Case
CT Carton
CY Cylinder
DR Drum
DZ Dozen
EA Each
EN Envelope
FT Foot
GL Gallon
GP Group
GR Gross
HD Hundred
HK Hank
IN Inch
JG Jug
JR Jar
KD Cord
KE Keg
KT Kit
LB Pound
LG Length
LI Liter
MC Thousand cubic feet
ME Meal
MR Meter
MX Thousand
OT Outfit
OZ Ounce
PC Piece
PD Pad
PE Peck
PG Package
PK Pack
PL Pail
PM Plate
PR Pair
PLT Pallet
PT Pint
PZ Packet
QT Quart
RA Ration
RD Round
RL Reel
RM Ream
RO Roll
SA Sack
SD Skid
SE Set
SF Square foot
SH Sheet
SK Skein
SL Spool
SO Shot
SP Strip
SX Stock
SY Square yard
TD Twenty-four
TE Ten
TF Twenty-five
TN Ton
TO Troy ounce
TS Thirty-six
TU Tube
UN Unit
VI Vial
VO Volume
WT Weight
YD Yard

Source: https://assist.dla.mil -- Downloaded: 2016-12-01T07:08Z
Check the source to verify that this is the current version before use.

b. Other abbreviations and acronyms.

2D	-	Two-dimensional
ABCA	-	American, British, Canadian and Australian
ARS	-	Agricultural Research Service
ALSC	-	American Lumber Standard Committee
ANSI	-	American National Standards Institute
APL	-	Automated Packing List
ASTM	-	ASTM INTERNATIONAL (formerly American Society for Testing and Materials)
BCID	-	Bar Code Identification Markings
Bq	-	Becquerel
C	-	Celsius
C&T	-	Clothing and Textiles
CAA	-	Competent Authority Approval
CAGE	-	Commercial & Government Entity
CARC	-	Chemical Agent Resistant Coating
CASKO	-	Component, Assembly, Set, Kit, or Outfit
CCP	-	Consolidation and Containerization Point
CDIST	-	Consignee Distribution Code
CD-ROM	-	Compact Disk-Read Only Memory
CFR	-	Code of Federal Regulations
CLIN		Contract Line Item Number
COC	-	Certificate of Conformance
COE	-	Certification of Equivalency
COND	-	Condition Code
CONEX	-	Container Express
CONTR NO	-	Contract Number
CONUS	-	Continental United States
CPI	-	Characters Per Inch
CU	-	Cube
DCMA	-	Defense Contract Management Agency
DD	-	Department of Defense
DEI	-	Data Element Identifier
DFAR(S)	-	Defense Federal Acquisition Regulation (Supplement)
DI	-	Data Identifier
DIC	-	Document Identifier Code
DLA	-	Defense Logistics Agency
DIST	-	Distribution Code
DoD	-	Department of Defense
DoDAAC	-	Department of Defense Activity Address Code
DoDAAF	-	DoD Activity Address File
DoDIC	-	Department of Defense Identification Code

Source: https://assist.dla.mil -- Downloaded: 2016-12-01T07:08Z
Check the source to verify that this is the current version before use.

DoDISS	-	Department of Defense Index of Specifications and Standards
DOT	-	Department of Transportation
DOT-E	-	Department of Transportation-Exemption
DRO	-	Disposal Release Order
DSCP	-	Defense Supply Center Philadelphia
DTR	-	Defense Transportation Regulation, DoD 4500.9-R
DTS	-	Defense Transportation System
DVD	-	Direct Vendor Delivery
E3	-	Electromagnetic Effects on the Environment
EDI	-	Electronic Data Interchange
EDIFACT	-	Electronic Data Interchange for Administration Commerce and Transport
EPC	-	Electronic Product Code
ESD	-	Electrostatic Discharge
EXP	-	Expiration
F	-	Fahrenheit
FDA	-	Food and Drug Administration
FMS	-	Foreign Military Sales
FRT	-	Freight
FSC	-	Federal Supply Class
GBL	-	Government Bill of Lading
GSA	-	General Services Administration
HAZMAT	-	Hazardous Materials
HCI	-	Hardness Critical Item
HERF	-	Hazards of Electromagnetic Radiation to Fuel
HERO	-	Hazards of Electromagnetic Radiation to Ordnance
HERP	-	Hazards of Electromagnetic Radiation to Personnel
HHG	-	Household Goods
HMIS	-	Hazardous Materials Information System
HRI	-	Human-readable Interpretation
IATA	-	International Air Transport Association
IAW	-	In Accordance With
ICAO	-	International Civil Aviation Organization
ICP	-	Inventory Control Point
IDENT	-	Identification Markings
IEC	-	International Electrotechnical Committee
IMDG	-	International Maritime Dangerous Goods
IMM	-	Integrated Materiel Management
IMO	-	International Maritime Organization
INSP	-	Inspection
IRRD	-	Issue Release/Receipt Document
ISO	-	International Organization for Standardization
ITGBL	-	International Through Government Bill of Lading
IUID	-	Item Unique Identification
JCS	-	Joint Chiefs of Staff

Source: https://assist.dla.mil -- Downloaded: 2016-12-01T07:08Z
Check the source to verify that this is the current version before use.

JHCS	-	Joint Hazard Classification System
KBq	-	Kilobecquerel
KPa	-	Kilopascal
LRO	-	Lateral Redistribution Order
LTL	-	Less than truckload
MAPAC	-	Military Assistance Program Address Code
MAPAD	-	Military Assistance Program Address Directory
MFD	-	Manufactured
MFR	-	Manufacturer
MHIA	-	Material Handling Industry of America
MHz	-	Megahertz
MILSTRIP	-	Military Standard Requisitioning and Issue Procedures
MILVAN	-	Military-owned Demountable Container
MMAC	-	Materiel Management Aggregation Code
MRO	-	Materiel Release Order
MSE	-	Major Subordinate Element
MSL	-	Military Shipping Label
MSv	-	Millisievert
MTMC	-	Military Traffic Management Command
MWO	-	Modification Work Order
NA	-	North American
NALC	-	Navy Ammunition Logistics Code
NATO	-	North Atlantic Treaty Organization
NIIN	-	National Item Identification Number
NMCS	-	Not Mission Capable Supply
NMWPM	-	Non-Manufactured Wood Packaging Materials
NOA	-	Notice of Availability
n.o.s.	-	Not Otherwise Specified
NRC	-	Nuclear Regulatory Commission
NSN	-	National/NATO Stock Number
OCONUS	-	Outside Continental United States
OCR	-	Optical Character Reader
OF	-	Optional Form
OMB	-	Office of Management and Budget
OSHA	-	Occupational Safety and Health Administration
PCB	-	Polychlorinated Biphenyl
PDF417	-	Portable Data File 417
PIIN	-	Procurement Instrument Identification Number
PN or P/N	-	Part Number
P/O	-	Part Of
POD	-	Port of Debarkation
POE	-	Port of Embarkation
POP	-	Performance-oriented Packaging
POV	-	Privately Owned Vehicle

Source: https://assist.dla.mil -- Downloaded: 2016-12-01T07:08Z
Check the source to verify that this is the current version before use.

PSN	-	Proper Shipping Name
QSTAG	-	Quadripartite Standardization Agreement
QTY	-	Quantity
QUP	-	Quantity per Unit Pack
RDD	-	Required Delivery Date
RIC	-	Routing Identifier Code
RF	-	Radio Frequency
RFID	-	Radio Frquency Identification
RPDD	-	Required Port Delivery Date
SA	-	Storage Activity
SCAC	-	Standard Carrier Alpha Code
SDR	-	Supply Discrepancy Report
SEAVAN	-	Commercial- or Government-owned (or -leased) Shipping Container
SER NO	-	Serial Number
SF	-	Standard Form
SLC	-	Shelf-life Code
SLEP	-	Shelf Life Extension Program
SMIC	-	Special Material Identification Code
STANAG	-	Standardization Agreement
Sv	-	Sievert
TAC	-	Type of Address Code
TAC	-	Transportation Account Code
TAMCN	-	Table of Allowance Materiel Control Number
TBq	-	Terabecquerel
TCMD	-	Transportation Control and Movement Document
TCN	-	Transportation Control Number
TGBL	-	Through Government Bill of Lading
TP	-	Transportation Priority
UB	-	Unaccompanied Baggage
UI	-	Unit of Issue
UIC	-	Unit Identification Code
UID	-	Deleted
UII	-	Unique Item Identifier
ULN	-	Unit Line Number
UM	-	Unit of Measure
UN	-	United Nations
UP	-	Unit Price
UPC	-	Universal Product Code
USD	-	United States Dollar
USPS	-	United States Postal Service
USv	-	Microsievert
UTC	-	Unit Type Code
WP	-	White Phosphorus
WT	-	Weight

Source: https://assist.dla.mil -- Downloaded: 2016-12-01T07:08Z
Check the source to verify that this is the current version before use.

3.1.1 463L System. Aircraft pallets, nets, tie down and coupling devices, facilities, handling equipment, procedures, and other components designed to interface with military and civilian aircraft cargo restraint systems. Though designed for airlift, system components may have to move intermodally via surface to support geographic Combatant Commander objectives.

3.2 Assembly. An item of supply, composed of two or more related parts, that is capable of disassembly (for example, carburetor, powerpack, intermediate frequency circuit amplifier).

3.3 Bar code. An array of rectangular bars and spaces in a predetermined pattern representing coded elements of data that can be automatically read and interpreted by automatic bar code reading devices.

3.3.1 Case. It is either an exterior container within a palletized unit load or it is an individual shipping container.

3.4 Commercial and Government Entity (CAGE) code. A five-position alpha-numeric code applicable to all activities that have produced or are producing items used by the Federal Government and to Government activities which control design or are responsible for development of certain specifications, drawings, or standards.

3.4.1 Contract Line Item Number (CLIN). A 4-6 digit number used to identify each delivery date and/or destination's quantity in the contract schedule.

3.5 Cognizant activity. The activity having responsibility for a contract or jurisdiction over it. At a contractor's facility, the cognizant activity is the administrative contracting officer or the procuring contracting officer. Contractor personnel do not qualify as the cognizant activity. At DoD installations, this is the head of the agency, bureau, command, or service that is responsible for storage and shipment.

3.6 Consignee (receiver). Party to whom materiel is shipped and whose name and address appear in the "ULTIMATE CONSIGNEE OR MARK FOR" block of the shipping label.

3.7 Consignor (shipper). Party who ships materiel and whose name and address appear in the "FROM" block of the shipping label.

3.8 Consolidation container. A container used to consolidate more than one line item into a single shipping container to be shipped to one destination, but not necessarily to one addressee.

3.8.1 Consolidated shipment unit. A shipment unit with multiple line items, or a shipment unit containing other shipment units, or a shipment unit with a mix of line items and other shipment units.

Source: https://assist.dla.mil -- Downloaded: 2016-12-01T07:08Z
Check the source to verify that this is the current version before use.

3.8.2 Content Level Detail. Content level detail includes those data elements that describe the asset or item being shipped plus the data elements necessary to minimally identify each level of a complete shipment entity. The most basic entity is a single box or unpacked item governed by a shipment unit identifier. The data elements are specifically described in DoD 4500.9-R, Defense Transportation Regulation.

3.9 Contract number or purchase order number (Procurement Instrument Identification Number (PIIN)) (including four-digit delivery order number or call number, when specified). The acquisition instrument identification number, appearing on the acquisition document. Some DoD contracts refer to the contract or purchase order number, together with the delivery order number, as the procurement instrument identification number (PIIN).

3.10 Defense Transportation System (DTS). That portion of the nation's transportation infrastructure that supports Department of Defense(DoD) transportation common-user transportation needs across the range of military operations. It consists of those common-user military and commercial assets, services, and systems organic to, contracted for, or controlled by the DoD.

3.10.1 Common-user transportation. Transportation and transportation services provided on a common basis for two or more Department of Defense (DoD) agencies, and authorized non-DoD agencies. Common-user assets are under the combatant command (command authority) of the Commander, U.S. Transportation Command (TRANSCOM), excluding Service-unique or theater-assigned assets.

3.10.2 Department of Defense Activity Address Code (DoDAAC). A distinct six-position alphanumeric code assigned to identify specific units, activities, or organizations as found in the Department of Defense Activity Address Directory. The DoDAAC may also be found in the acquisition document "SHIP TO" information.

3.10.3 Government Bill of Lading (GBL). A Government document used to procure transportation and related services from commercial carriers.

3.10.4 Military Standard Requisitioning and Issue Procedures (MILSTRIP). A DoD program to establish uniform defense-wide logistics performance measurement reporting to be used in establishing time standards, point to point reporting, supply system workload factors, transportation planning guidelines, and traffic pattern analysis.

3.10.5 Electronic Product Code™ (EPC)™. An identification scheme for universally identifying physical objects via radio frequency identification (RFID) tags and other means. The standardized EPC data consists of an EPC (or EPC Identifier) that uniquely identifies an individual object, as well as an optional filter value when judged to be necessary to enable effective and efficient reading of the EPC tags. In addition to this standardized data, certain classes of EPC tags will allow user-defined data. The EPC Tag Data Specifications will define the length and position of this data, without defining its content.

Source: https://assist.dla.mil -- Downloaded: 2016-12-01T07:08Z
Check the source to verify that this is the current version before use.

3.10.6 Electronic Product Code Class 0 RFID tag. "EPC Class 0" passive RFID tags meet the EPCglobal™ Class 0 Specification.

3.10.7 Electronic Product Code Class 1 RFID tag. "EPC Class 1" passive RFID tags meet the EPCglobal™ Class 1 Specification.

3.11 Electrostatic discharge (ESD) sensitive devices. Electrical and electronic devices that are susceptible to damage from electrostatic discharge (static electricity). These devices include, but are not limited to, integrated circuits and discrete devices (e.g., resistors, transistors, and other semiconductor devices).

3.12 Exterior container. A container, bundle, or assembly that is sufficient by reason of material, design, and construction to protect unit packs and intermediate containers and their contents during shipment and storage. It can be a unit pack or a container with a combination of unit packs or intermediate containers. An exterior container may or may not be used as a shipping container.

3.13 Hardness critical item (HCI). Items at any assembly level which are mission critical and could be designed, repaired, manufactured, installed, or maintained for normal operation and yet degrade a system's survivability in a nuclear environment if hardness were not considered. HCIs will only be replaced with other HCI-approved items.

3.14 Hazardous materials. An item of supply consisting of materiel that because of its quantity, concentration, or physical, chemical, or infectious characteristics, may either cause or significantly contribute to an increase in mortality or an increase in serious, irreversible, or incapacitating reversible illness; or pose a substantial present or potential hazard to human health or the environment when improperly treated, stored, transported, disposed of, or otherwise managed. (This includes all items listed as hazardous in Titles 29, 40, 49 CFR and other applicable modal regulations effective at the time of shipment.)

3.15 Human-readable interpretation (HRI). An exact, literal interpretation of the encoded bar code data presented in a human-readable font.

3.16 Interior container. A container that is inside another container. It may be a unit pack or an intermediate container that is placed inside an exterior container or shipping container.

3.17 Intermediate container. A wrap, box, or bundle containing two or more unit packs of identical items. Normally one or more intermediate packages will be bundled to make a shipping container.

3.18 Item description (nomenclature). The name and description of an item as it appears in the contract, purchase order, or requisition. The source document for this information is the DD Form 61 (Request for Nomenclature), which contains the exact name and description of an item.

Source: https://assist.dla.mil -- Downloaded: 2016-12-01T07:08Z
Check the source to verify that this is the current version before use.

3.19 Levels of protection. A means of specifying the minimum preservation and packing that a given item requires to assure that it is not degraded during shipment and storage.

3.19.1 Military preservation. Preservation designed to protect an item during shipment, handling, indeterminate storage, and distribution to consignees worldwide (see 3.32).

3.19.2 Military levels of packing. The packaging levels are level A, which provides maximum protection to meet the most severe worldwide shipment, handling, and storage conditions; and level B, which provides protection to meet moderate worldwide shipment, handling, and storage conditions.

3.20 Loose or unpacked item. An identifiable item that is unencumbered by a tie, wrap, or container.

3.21 Lot, batch, or identification control number. That series of numbers or letters, or both, that are established to record the production and control of the product.

3.22 Military methods of preservation/preservation date. Military methods of preservation are defined in MIL-STD-2073-1. The date of preservation is the date the item was placed in the unit pack.

3.23 Modification work order (MWO). Official publication providing authentic and uniform instructions for the alteration and modification of existing materiel, including joint service publications published as retrofit orders.

3.24 National/NATO stock number (NSN). A 13-digit number that is divided into two parts, the Federal supply class (FSC) number and the national item identification number (NIIN). The FSC is the first four digits of the NSN that establishes its relationship to other items within the same FSC. The NIIN is the last nine digits of the NSN. The first two digits of the NIIN identify the country assigning the two numbers referred to as the National Codification Bureau Codes. The remaining seven are serially assigned numbers. When shown in the contract/requisition, the NSN includes any prefixes and suffixes.

3.25 Packaging. The processes and procedures used to protect materiel from deterioration, damage, or both. It includes cleaning, drying, preserving, packing, marking, and unitizing.

3.26 Packing. The assembly of items into unit packs and intermediate or exterior containers, with the necessary blocking, bracing, cushioning, weatherproofing, reinforcement, and marking.

Source: https://assist.dla.mil -- Downloaded: 2016-12-01T07:08Z
Check the source to verify that this is the current version before use.

3.27 Palletized unit load. A quantity of items, packed or unpacked, arranged on a pallet in a specified manner and secured, strapped, or fastened on the pallet so that the whole palletized load is handled as a single unit. A palletized or skidded load is not considered to be a shipping container. A loaded 463L System pallet is not considered to be a palletized unit load. Refer to the Defense Transportation Regulation, DoD 4500.9-R, Part II, Chapter 203 for marking of 463L System pallets.

3.28 Parcel post. Any packed materiel placed in United States Postal Service channels.

3.28.1 Passive radio frequency identification (RFID) tag. A RFID device which modulates and reflects a carrier signal from an interrogator. Passive RFID tags operate without a separate external power source and obtain operating power generated from the reader.

3.29 Polychlorinated biphenyl (PCB). An organic chemical, synthetically manufactured and used primarily in electrical equipment. It is harmful to human health and the environment.

3.30 Port of debarkation (POD). An authorized point where shipments enter a country, either into the continental United States (CONUS) or into a foreign country.

3.31 Port of embarkation (POE). An authorized point where shipments leave a country, either from CONUS or from a foreign country.

3.32 Preservation. The processes and procedures used to protect materiel against corrosion, deterioration, and physical damage during shipment, handling, and storage; application of protective measures, including cleaning, drying, preservative materials, barrier materials, cushioning, and containers when necessary. Military methods of preservation are defined in MIL-STD-2073-1.

3.33 Project code. A three-position alphanumeric code which identifies plans, programs, and exercises.

3.34 Proper shipping name (PSN). The name of a hazardous material shown in Roman print (not italics) in part 172 of Title 49 CFR and in other hazardous materials related publications.

3.35 Protected cargo. Items that are required to be secured, identified, segregated, handled, or accounted for in such a manner as to ensure their safeguard or integrity. Protected cargo is subdivided into classified, controlled, pilferable, and sensitive items.

3.35.1 Classified items. Items that are of a classified nature and have a security classification.

3.35.2 Controlled items. Items that require additional control and security as prescribed in various regulations and statutes. Controlled items include money, negotiable instruments, narcotics, registered mail, precious metal alloys, ethyl alcohol, and objects that could be utilized in the illegal use of drugs (i.e. hypodermic needles).

Source: https://assist.dla.mil -- Downloaded: 2016-12-01T07:08Z
Check the source to verify that this is the current version before use.

3.35.3 Pilferable items. Items that are vulnerable to theft because of their ready resale potential, such as cigarettes, alcoholic beverages, cameras, electronic equipment, and clothing and textiles.

3.35.4 Sensitive items. Items such as small arms, ammunition, and explosives with the potential for use during civil disturbances, domestic unrest, or if used by criminal elements. In the hands of militant or revolutionary organizations, these items present a definite threat to public safety.

3.36 Quantity per unit pack (QUP). The quantity of items in a unit pack given in the terminology of the definitive unit of issue. When a nondefinitive unit of issue is assigned to the stock item, it may be further quantified by a unit of measure and measurement quantity (see Unit of Issue).

3.36.1 Radio Frequency Identification (RFID). An automatic identification and data capture technology comprised of one or more reader/interrogators and one or more RF transponders in which data transfer is achieved by means of suitably modulated inductive or radiating electromagnetic carriers.

3.37 Radioactive material. Any material, or combination of materials, which spontaneously emit ionizing radiation, including materials that possess artificial, induced, and natural radio-activity. Materials in which the estimated specific activity is not greater than 70Bq gram (0.002 microcuries/gram) of material, and in which the radioactivity is essentially uniformly distributed, are not considered to be radioactive materials.

3.38 Required delivery date (RDD). The day of the year (e.g., 087, 198, etc.) specified on the requisition when materiel is required by the requisitioner or the consignee.

3.39 Security assistance. A group of programs authorized by the Foreign Assistance Act of 1961, as amended, and the Arms Export Control Act, as amended, or other related statutes by which the United States provides defense articles, military training, and other defense-related services by grant, credit, cash sale, lease, or loan in furtherance of national policies and objectives. Foreign Military Sales (FMS) is one of the security assistance programs.

3.40 Serial number. The number on the item assigned by the manufacturer or the Government for identification or control.

3.41 Shelf-life. The total period of time beginning with the date of manufacture, cure date (for elastomeric and rubber products only), assembly, pack (subsistence only), or after visual inspection/certified laboratory test/restorative action, that an item may remain in the combined wholesale (including manufacturer's) and retail storage systems and still remain suitable for issue to and/or consumption by the end user. Shelf-life should not be confused with service life.

3.41.1 Assembled date. The date items or parts are assembled into components, assemblies, sets, kits, or outfits (CASKOs), or the date various CASKOs are assembled into a larger unit.

Source: https://assist.dla.mil -- Downloaded: 2016-12-01T07:08Z
Check the source to verify that this is the current version before use.

3.41.2 Cured date. The date the item or materiel was altered industrially, as to vulcanize (rubber) or to treat (synthetic elastomers) with heat or chemicals to make them infusible.

3.41.3 Expiration date. The date by which nonextendible shelf-life items (type I) will be discarded as no longer suitable for issue/use.

3.41.4 Inspect/test date. The date by which extendible shelf-life items (type II) will be subjected to visual inspection, certified laboratory tests, or restoration.

3.41.5 Manufactured date. The date the item, materiel, or commodity was fabricated, processed, produced or formed for use. For drugs, chemicals, and biologicals, the date of manufacture for products submitted to the Food and Drug Administration (FDA) for certification prior to release is the date of the official certification notice. For products manufactured under the license of the Agricultural Research Service (ARS), the date manufactured conforms to the definition established by the ARS. The date of manufacture will not be shown for medical items having expiration dates.

3.41.6 Packed date. For subsistence items only, the packed date will be the date on which the item was packaged in the unit pack, regardless of the date of packing, shipping, or additional processing.

3.42 Shelf-life code (SLC). A code assigned to a shelf-life item to identify the period of time beginning with the date of manufacture, date of cure (for elastomeric and rubber products only), date of assembly, or date of pack (subsistence only), and ending with the date by which the item must be used (expiration date) or subjected to inspection, test, restoration, or disposal action.

3.43 Shelf-life item. An item of supply that possesses deteriorative or unstable characteristics to the degree that a storage time period must be assigned to ensure that the item will perform satisfactorily in service.

3.43.1 Type I shelf-life item. An individual item of supply which is determined through an evaluation of technical test data and/or actual experience, to be an item with a definite nonextendible period of shelf-life. One exception is Type I medical shelf-life items, that may be extended if they have been accepted into and passed testing for extension in the DoD/FDA Shelf-Life Extension Program (SLEP).

3.43.2 Type II shelf-life item. An individual item of supply having an assigned shelf-life time period that may be extended after completion of visual inspection/certified laboratory test, and/or restorative action.

3.44 Shipping container. An exterior container which meets carrier regulations and is of sufficient strength, by reason of material, design, and construction, to be shipped safely without further packing (e.g., wooden boxes or crates, fiber and metal drums, and corrugated and solid fiberboard boxes).

Source: https://assist.dla.mil -- Downloaded: 2016-12-01T07:08Z
Check the source to verify that this is the current version before use.

3.45 Supply Condition Codes for Shelf-Life Items. Specific codes that provide standard criteria at the wholesale/retail level and designate the remaining shelf-life of an item from dates of manufacture, cure, assembly, pack (subsistence only), inspect, test, or restoration action. The codes indicate the classification of materiel that reflects its readiness for issue and use or to identify the action underway to change the status of materiel. DoD 4000.25-1-M provides a complete listing of these codes and their definitions as related to shelf-life items/materiel.

3.46 Transportation Control Number (TCN). The single standard shipment identification number for all DoD-sponsored movements (i.e., materiel and equipment and all vendor shipping transactions involving DoD materiel). The TCN is a 17-position alpha-numeric data element assigned to control a shipment unit through the transportation system (to include CONUS shipments, shipments entering the DTS, and commercial systems).

3.46.1 Unique Identification (UID). Deleted.

3.46.2 Item Unique Identification (IUID). A system of establishing unique item identifiers within the DoD by assigning a machine-readable character string or number to a discrete item, which serves to distinguish it from other like and unlike items.

3.46.3 Unique Item Identifier (UII). The set of data elements marked on items that is globally unique, unambiguous, and robust enough to ensure data information quality throughout life and to support multi-faceted business applications and users.

3.46.4 IUID equivalent. Item unique identification methods in commercial use that have been recognized by DoD for use as Unique Item Identifiers (UIIs).

3.46.5 Concatenated UII. The string of UII data set elements linked into a single data element (see MIL-STD-130).

3.46.6 Item. A single hardware article or single unit formed by a grouping of subassemblies, components, or constituent parts (see MIL-STD-130).

3.47 Unit of issue (UI). The UI is a standard or basic quantity that is expressed as a unit and indicated in a requisition, contract, or order as the minimum quantity issued (bottle, can, dozen, each, foot, gallon, gross, pair, pound, yard, etc.).

3.47.1 Definitive unit of issue. A definitive UI is a type of UI designation that indicates an exact quantity of volume, linear measurement, weight, or count (e.g., assembly, each, kit, set, foot, etc).

3.47.2 Nondefinitive unit of issue. A nondefinitive UI is a type of UI designation that does not indicate an exact quantity of volume, linear measurement, weight, or count such as drum, can, box, or roll. When a nondefinitive UI is specified, it is accompanied by a quantitative expression (1 RO (150 ft) or 1 RL (50 ft)).

Source: https://assist.dla.mil -- Downloaded: 2016-12-01T07:08Z
Check the source to verify that this is the current version before use.

3.47.3. Quantitative expression. The exact quantity of volume linear measurement, weight, or count contained in a UI (5 gallons, 100 feet, 10 pounds, 25 each, etc.).

3.48 Unit pack. The first tie, wrap, or container applied to a single item, or a quantity thereof, or to a group of items of a single stock number, preserved or unpreserved, which constitutes a complete or identifiable package.

3.49 Warranty markings. Markings that apply when a shipment contains items with a service life defined in a specific amount of hours, a specific end date, or a specific operating time.

Source: https://assist.dla.mil -- Downloaded: 2016-12-01T07:08Z
Check the source to verify that this is the current version before use.

4. GENERAL REQUIREMENTS

4.1 Identification markings. Figure 1 shows an example of the content and approximate placement of the identification markings on unit packs and intermediate and exterior containers. Unless specifically exempted in the contract or solicitation, or this standard, these markings shall be applied to all DoD and contractor- or vendor-originated shipments. Marking materials, methods and size of markings should comply with 5.1. The exact placement of identification and bar code markings on specific containers may vary in configuration and format from those shown in the figures. Ammunition and explosives shall be marked as specified in 5.6 of this standard or as specified by the contract or solicitation. Hazardous items shall be marked with identification markings as specified herein and in 5.5. Bar code markings are required as specified in 4.4.

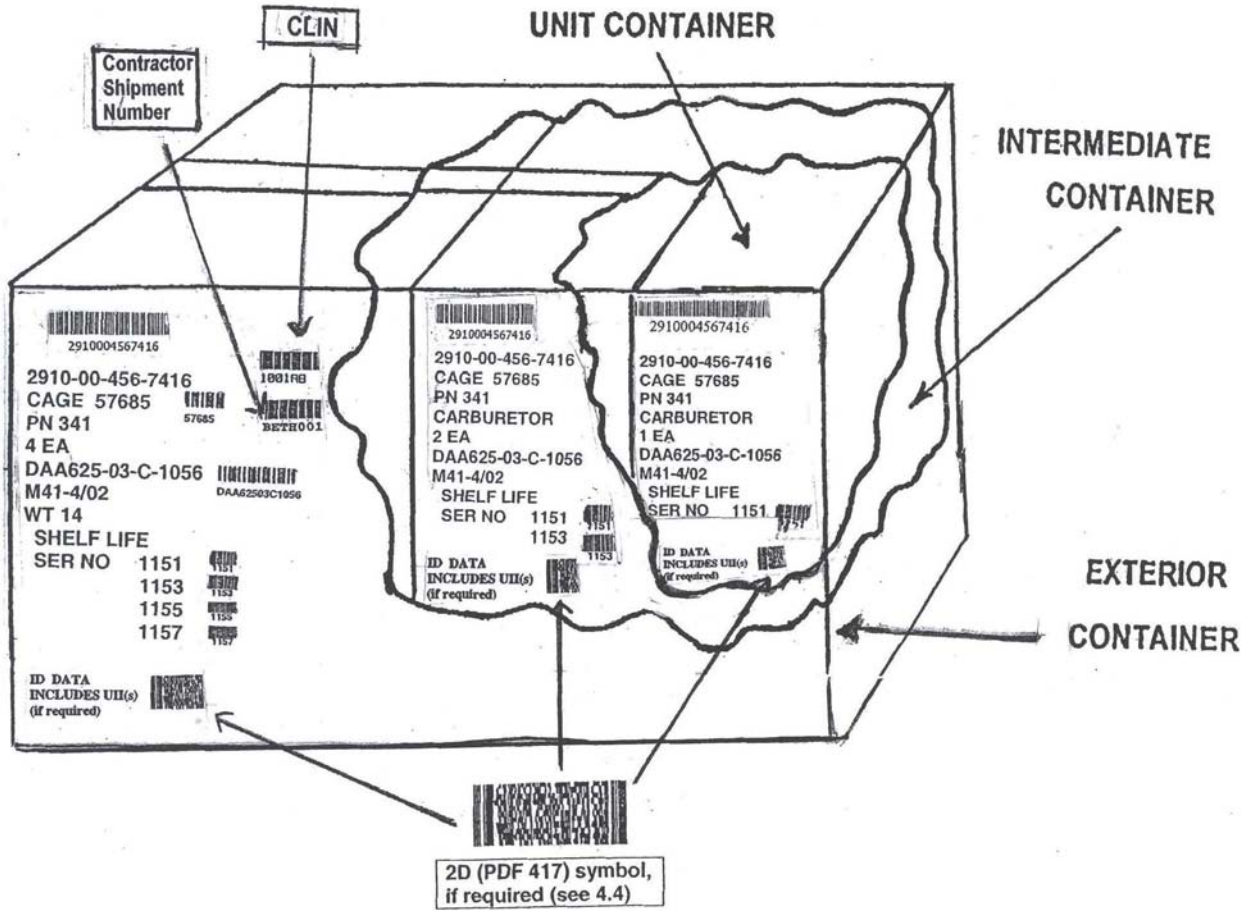

FIGURE 1. Example of unit pack, intermediate and exterior container identification markings (including an example of bar code markings). For hazardous markings, see 5.5.

Source: https://assist.dla.mil -- Downloaded: 2016-12-01T07:08Z
Check the source to verify that this is the current version before use.

4.1.1 Identification marking information on unit packs and intermediate containers. Unless specifically exempted in the contract or solicitation, the following identification information shall be marked on all unit packs and intermediate containers, in the order listed. This requirement applies to all unit packs and intermediate containers repacked for shipment by military installations. Additional identification markings may be required by the contract and shall be placed either below these markings or in a conspicuous location on the identification-marked side of the container. Unit packs used as exterior containers at the time of packaging shall be marked in accordance with 4.1.2.

a. NSN/NATO stock number. The in-the-clear NSN will include spaces or dashes and any prefix or suffix specified in the contract or solicitation. The bar coded NSN and human readable interpretation (HRI) below the bar code will not include spaces or dashes, unless otherwise specified in the contract or solicitation. If no NSN is assigned, then this line may be omitted.

b. CAGE code. The CAGE code of the company awarded the contract for the item being shipped.

c. Part Number. If a PN is specified in the contract or order, then only that PN shall be shown. The PN specified in the contract may be the PN assigned by the Government procuring activity, or it may be the PN of the actual manufacturer or the PN assigned to the item by the company awarded the contract. For shipments sent directly from a subcontractor to a DoD addressee, the PN of the company awarded the contract shall be shown. The letters "PN" or "P/N" shall be used to identify this information. If the item has no PN assigned to it or if no PN is cited, then nothing is shown.

d. Item description or nomenclature. The exact name and description of an item as it appears in the contract, purchase order or requisition shall be shown. Item description may be marked on more than one line if required due to space limitations. Standard abbreviations, although not desired, may be used if marking length is excessive.

e. Quantity and UI. A nondefinitive UI shall be accompanied by a quantitative expression such as "1 RO (100 FT)." For ammunition, the quantity always precedes the item description.

f. Contract number or purchase order number (Procurement Instrument Identification Number (PIIN)) including four-digit delivery order or call number, modification for change order number (see 5.2.12), and lot number (see 5.2.13) shall be shown. The in-the-clear contract number will include the dashes as shown in the contract, i.e., DAAB07-96-C-1234. Additional information may be required by the contract or purchase order.

Source: https://assist.dla.mil -- Downloaded: 2016-12-01T07:08Z
Check the source to verify that this is the current version before use.

g. Military preservation method and date of unit preservation (e.g., "M41-4/02" - method 41, from MIL-STD-2073-1, was provided in April 2002). Use of the letter M in the first position indicates the pack is a military preservation method; "41" is the method number; "4/02" indicates the date of preservation. For specialized preservation codes, use the code from MIL-STD-2073-1, Table J.Ia. (e.g., "MBC-4/02" – method BC was provided in April 2002). Method of preservation code "ZZ" will be shown as "ZZ". If a military preservation method doesn't apply, the method space will be left blank. If a preservation date doesn't apply, the pack date will be shown.

h. Shelf-life markings, if applicable, shall be applied as specified in 5.2.1.

i. Serial number(s). When an item is assigned a serial number, that number shall be applied and preceded by the abbreviation "SER NO" (see 4.4.2.2).

j. Hazardous materials (HAZMAT) and ammunition and explosives marking (see 5.5 and 5.6).

NOTE: Identification bar code marking requirements, including encoding of the concatenated UII(s), and bar code configurations and formats for unit packs and intermediate containers, are specified in 4.4.

4.1.2. Identification marking information on exterior containers and unpacked items (see Figure 1). Unless specifically exempted in the contract or solicitation, the following minimum identification information shall be marked on all exterior containers and unpacked items, in the order listed. Ammunition and explosives shall be marked as specified in 5.6. of this standard or as specified by the contract or solicitation. Hazardous items shall be marked with identification markings as specified herein and in 5.5. Bar code markings are required as specified in 4.4.

a. NSN/NATO stock number (see 4.1.1a).

b. CAGE code. (see 4.1.1b).

c. Part number (see 4.1.1c).

d. Item description or nomenclature (for hazardous items and ammunition and explosives only (see 4.1.1d)).

e. Quantity and UI (see 4.1.1e).

(1) Deleted.

(2) Deleted.

(3) Deleted.

Source: https://assist.dla.mil -- Downloaded: 2016-12-01T07:08Z
Check the source to verify that this is the current version before use.

f. Contract number or purchase order number (PIIN) including four-digit delivery order or call number, modification for change order number, and lot number shall be shown (see 4.1.1f).

(1) When more than one contract is applicable to a multipack, the contract number is not required on the multipack but shall be applied to each container in the multipack.

(2) Unless specifically required by a military Service or Agency directive, contract identification marking is not required on exterior containers when items are repacked for shipment by military installations.

(3) For Defense Supply Center Philadelphia (DSCP) Clothing and Textile (C&T) items, the following additional markings are required: shipment number and container number. The container number shall be consecutively numbered from each shipping point for the duration of the contract. For multiple container shipments of C&T items, the packing list shall be placed inside the last container to be loaded for each shipment. The words "PACKING LIST HERE" shall be marked on the container.

g. Military preservation method and date of unit preservation (see 4.1.1g).

h. Gross weight. The capital letters "WT" shall precede the gross weight. The gross weight will be expressed in pounds rounded up to the nearest pound.

i. Proper shipping name (PSN) and North American (NA) or United Nations (UN) identification number, where assigned (see 5.5.2).

j. Shelf-life markings, if applicable (see 4.1.1h).

k. Serial number(s). When an item is assigned a serial number, that number shall be applied and preceded by the abbreviation "SER NO". Serial numbers assigned by the manufacturer solely for the purpose of indicating the quantity produced should not be shown (see 4.4.3.3).

l. Hazardous materials (HAZMAT) and ammunition and explosives marking (see 5.5 and 5.6).

NOTE: Identification bar code marking requirements, including encoding of the concatenated UII(s), and bar code configurations and formats for exterior containers, are specified in 4.4.

4.1.2.1 Marking for assorted items.

4.1.2.1.1 Related items. When an assortment of related items, which cannot be identified under one stock number but which support a specific weapon system or end item is packed in a shipping container, the date of pack (the date the shipping container was packed), the gross weight, special markings, as required by 5.2, and a brief description of the contents shall be applied in lieu of the entire identification data (e.g., spare parts to NSN XXXX). Kit or set components shall be segregated and identified by PN or NSN.

Source: https://assist.dla.mil -- Downloaded: 2016-12-01T07:08Z
Check the source to verify that this is the current version before use.

4.1.2.1.2 Unrelated items (multipacks). When containers of unrelated items comprised of mixed NSNs which do not support a specific weapon system or end item are consolidated into a shipping container, in lieu of the identification markings required by 4.1.2, the shipping container shall be marked with the following information in the order listed: the word "MULTIPACK" (line 1) and the gross weight (line 2). Hand printing on multipacks is permitted.

Example: MULTIPACK
WT 100

NOTES:
1. In addition to any shelf-life markings, the words "CONTAINS SHELF-LIFE ITEMS" shall be placed below the identification markings on multipacks containing shelf-life materiel.

2. For information on marking of multipacks containing hazardous materials, see 5.5.5.6.

3. The words "WARRANTED ITEMS INSIDE" shall be placed immediately below the identification markings on multipacks that contain items covered by a warranty.

4. For Foreign Military Sales (FMS), all boxes containing multiple items (whether related or unrelated) shall be marked as multipacks.

5. Caution markings shall be applied as required (e.g., FRAGILE, arrows, hazardous warning labels, etc.).

6. Containers shipped to a single destination that contain individual shipments/containers for multiple consignees shall have the words "MULTIPLE DoDAACs" applied to the outside of the container.

4.2 Address markings. Military (DoD) and contractor- or vendor-originated address markings, to include the military shipping label (MSL) and respective bar code symbols, shall be as specified in DoD 4500.9-R, Part II, Chapter 208, and as summarized herein. The preferred location for applying address markings to shipping containers is shown in the figures in this section. Exact placement of MSLs may vary slightly from those shown.

4.2.1 Military (DoD) and contractor- or vendor-originated address markings (see Figures 2a and 2b). Unless specifically exempted in the contract, DoD and contractor or vendor shipping activities will apply address markings using a bar coded MSL. This includes shipments moving within CONUS or OCONUS, from CONUS to OCONUS, or conversely from OCONUS to CONUS.

Source: https://assist.dla.mil -- Downloaded: 2016-12-01T07:08Z
Check the source to verify that this is the current version before use.

4.2.2 Military Shipping Label (MSL) (see Figures 2a and 2b). The MSL will be completed in accordance with 4.2.2.5 and attached in accordance with 4.3.2. Each shipment unit in a unitized load shall be marked with an MSL. For example, the shipment unit in a palletized unit load is the pallet. For contractor or vendor shipments, the MSL information shall be coordinated between the contractor or vendor and the contracting office or administrative contracting office, per the FAR 47.305-10, FAR 52.247-52, DFARS 247.305-10 and DFARS 247.371.

a. The MSL will include clear-text entries applicable to the shipment.

b. The MSL will include linear (Code 39) bar codes formatted in accordance with this standard in reference to ISO/IEC 16388. Three linear (Code 39) bar codes are required including the Transportation Control Number (TCN), piece number without leading zeros, and Ultimate Consignee/Mark For DoDAAC.

(1) Deleted.

(2) Deleted.

(3) Deleted.

(4) Deleted.

c. The MSL will include a 2D (PDF417) symbol in accordance with ANSI MH10.8.6 and ISO/IEC 15438, formatted in accordance with 4.2.2.6 and Table IV of this standard, with reference to DoD 4500.9-R, Part II, Appendix X. The 2D (PDF417) symbol will contain Table IV specified human readable information from the printed MSL, Table IV specified DoD 4500.9-R, Part II, TCMD data (only selected data), and Table IV specified line item supply data (DD Form 1348-1A or requisition information). The applicable 2D (PDF417) symbol Data Identifier (DI) formats can be found in Table IV of this standard. ISO/IEC 15434 and MHIA MH10.8.2 are the references for Table IV.

(1) The 2D (PDF417) symbol shall contain the clear-text information on the MSL as provided for in 4.2.2.6. For contractor or vendor shipments, the TCMD information, when required, shall be coordinated between the contractor or vendor and the contracting office or administrative contracting office, per the FAR 47.305-10 and the DFARS 247.305-10 and 247.371, and applied by the contractor per FAR 52.247-52. The TCMD may contain coded information that shall be converted to in-the-clear text for printing on the MSL, for example, deletion of leading zeros from pieces, weight, cube, length, width, height, TCMD data, and conversion of alpha numeric pieces, weight, cube, and TCMD codes to numeric digits. Each shipment unit in a consolidated shipment shall be marked with a 2D (PDF417) MSL.

Source: https://assist.dla.mil -- Downloaded: 2016-12-01T07:08Z
Check the source to verify that this is the current version before use.

(2) The 2D (PDF417) symbol line item supply data for MILSTRIP transactions is sourced from DD Form 1348-1A information as noted in DoD 4000.25-1-M, Appendix 1.35, or as carried forward from the contract/order. The MSL 2D (PDF417) symbol on each piece of a shipment unit will have the same line item information. For contractor or vendor shipments, this information, as available, and the DFARS 247.305-10 minimum requirements, shall be coordinated between the contractor or vendor and the contracting office or administrative contracting office. For non-MILSTRIP transactions, the available information will be limited. Ammunition shipments may also include DoDIC and lot number information. For factors that determine the amount of available data to be recorded on the 2D (PDF417) symbol, see 4.2.2.6c.

4.2.2.1 MSL size. The recommended size for the MSL is 4 inches by 6 inches. The labels and bar codes in the figures have been reduced in size for ease of publication.

4.2.2.2 MSL stock quality. The quality of the MSL will be such that labels are suitable for ink printing without feathering or spreading. The MSL must withstand normal handling and shipping conditions and remain securely in position. For general bar code label requirements see 5.1.2. For HAZMAT label requirements see Title 49 CFR.

4.2.2.3 MSL format. The in-the-clear data and bar code entries shall meet required ANSI/ISO standards listed in section 2 and shall comply with 4.2.2.4 through 4.2.2.8, Table IV detailed formats, and DoD 4500.9-R, Part II, Chapter 208 requirements. The MSL data requirements are summarized in 4.2.2.5 and 4.2.2.6. The in-the-clear data and linear (Code 39) bar code HRI shall be easily human readable. The linear (Code 39) bar codes and the 2D (PDF417) bar code symbol shall be easily machine readable. Figures 2a and 2b show examples of acceptable MSL formats that may be used as guidelines in producing a label. MHIA MH10.8.1 is the referenced standard for developing a DTR compliant MSL.

Source: https://assist.dla.mil -- Downloaded: 2016-12-01T07:08Z
Check the source to verify that this is the current version before use.

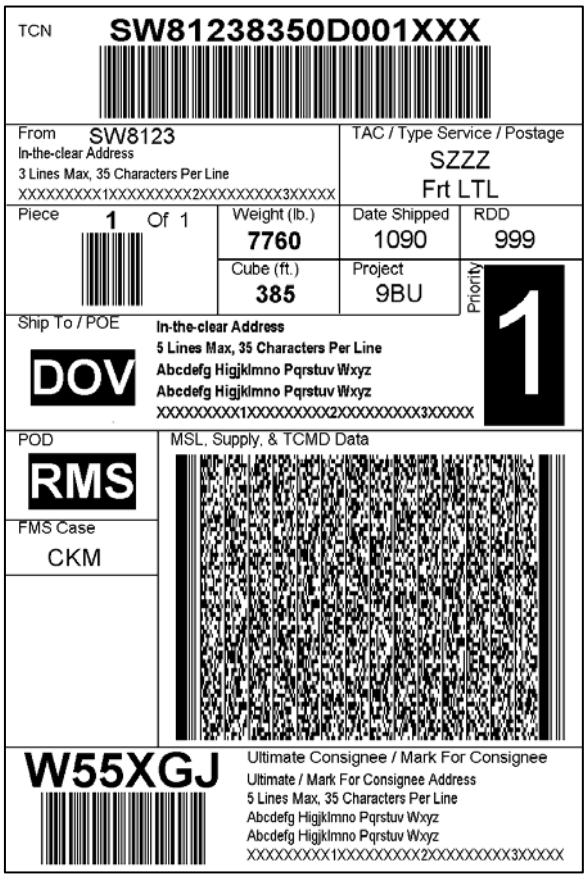

FIGURE 2a. Generic Cargo.

FIGURE 2b. Unit Move.

(Recommended label size is 4 inches by 6 inches).

FIGURE 2c. MSL with Express Service bar codes. Deleted.

Source: https://assist.dla.mil -- Downloaded: 2016-12-01T07:08Z
Check the source to verify that this is the current version before use.

4.2.2.4 Completing the MSL for address marking**.** The MSL shall be completed as follows to include in-the-clear text or descriptive information, linear (Code 39) bar codes with HRI, and a 2D (PDF417) symbol.

a. Linear (Code 39) bar code and 2D (PDF417) symbol labels may be affixed to the MSL as an alternative to direct printing on the MSL, providing the labels don't impact the effectiveness of the MSL.

b. Data Identifier (DI) codes shall not be used in conjunction with the linear (Code 39) bar codes.

c. The MSL unique transport unit identifier shall be the TCN and it shall be encoded and printed as the uppermost bar code on the top of the label. Information on TCN construction for the various types of shipments is detailed in DoD 4500.9-R, Part II, Cargo Movement, Appendix L.

d. Linear (Code 39) bar codes or 2D (PDF417) bar code symbols shall not be positioned in the same linear plane and the label layout should provide as much vertical spacing as available between the bar code symbols to reduce the possibility of scanning interference.

e. The text for all entries, except as noted below, shall be no smaller than 10 lines per 1 inch (approximately a 7 point font). The preferred font size is 10 to 14 points.

(1) The "Ship To" address character height shall be no smaller than the "From" address character height and should be distinctive in appearance, for example, larger, bolder, different color, etc. The "Ship To" address shall be located below or to the right of the "From" address.

(2) The transportation priority numeral shall be bold text and shall be ¾ inch high (approximately a 72 point font).

4.2.2.5 Data content of the MSL (see Figures 2a and 2b). The data content of the MSL and the instructions for completion are summarized below.

a. The MSL shall contain the following information:

(1) TCN. Enter the 17-character (alphanumeric) TCN using a 1/2-inch-high linear (Code 39) bar code with HRI as the uppermost bar code on the top of the label. For consolidated shipments, place a lead TCN in this block. The lead TCN shall not duplicate any internally packed TCNs.

(2) Transportation Account Code (TAC)/Postage. Enter the TAC or the postage data. For other than mail shipments, enter the TAC applicable to shipments moving from POE to POD, otherwise leave blank. For mail shipments, use one of the following:

Source: https://assist.dla.mil -- Downloaded: 2016-12-01T07:08Z
Check the source to verify that this is the current version before use.

(a) For metered mail, attach the stick-on metered postage values to or near this block.

(b) For permit imprint mail, enter the appropriate service/agency mail authorization.

Example: First Class Mail
Postage and Fees Paid
Defense Logistics Agency
Permit No. G-53

(3) From. Enter the Consignor DoDAAC/CAGE and in-the-clear address (up to 3 lines of 35 characters) of the shipping activity. For mail include the ZIP code.

(4) Type Service. In-the-clear text (for example, Frt LTL, Air Expss, Expss Mail, TGBL UB, DPM HHG) for the type of transportation service to the "Ship To" address. The in-the-clear text may be derived from the TCMD Mode/Method code for the Generic Cargo MSL. Should be blank for unit move shipments.

(5) Ship to/POE. Enter an in-the-clear ship to address (three characters and five lines of up to 35 characters) or, if applicable, enter the three digit air/water Port of Embarkation (POE) code (from DoD 4500.9-R, Part II, Appendix CC or MM) and its Ship to address. A POE code is not required for shipments to a DLA CCP.

(6) Priority. Enter the applicable transportation priority (TP). TP 1, 2, 3, or 4 (deferred air freight) should be clearly identified in the priority block of the MSL using bold text that is 3/4 inch high. Should be blank for unit move shipments.

(7) POD. Enter three-digit air/water Port of Debarkation (POD) port designator (from DoD 4500.9-R, Part II, Appendix CC or MM), if applicable. In-the-clear location name may be included. Blank for classified unit move shipments. Blank for mail shipments.

(8) Project Code. Enter project code, if applicable.

(9) Ultimate Consignee/Mark For Consignee. Enter the in-the-clear complete address(s) (up to five lines of 35 characters) and the ½-inch-high linear (Code 39) bar code DoDAAC or MAPAC, with HRI. Blank for classified unit move.

(10) Weight (lbs). Enter actual gross weight (numeric value of this piece). Round to next whole digit and do not zero fill.

(11) RDD. Enter the Required Delivery Date (RDD) code specified by the requisitioner, if appropriate. Blank for classified unit move.

Source: https://assist.dla.mil -- Downloaded: 2016-12-01T07:08Z
Check the source to verify that this is the current version before use.

(12) Cube (ft). Enter the actual cube (numeric value of this piece). Round to next whole digit and do not zero fill.

(13) Charges. No known requirement. Leave Blank.

(14) Date Shipped. Enter an in-the-clear date (for example YDDD, YYYYDDD, or DD-MMM-YYYY). Blank for unit move. Do not use the Date Shipped Code from DoD 4500.9-R, Part II, Appendix RR.

(15) FMS Case Number. Enter as FMS case identifier as appropriate.

(16) Piece Number. Enter the piece number (numeric value assigned to this piece) of the cargo documented by the TCN for this shipment unit and a ½-inch-high linear (Code 39) bar code. Do not zero fill. Piece Number may be expressed as "Piece Number of Total Pieces" to save space on the label -- only the Piece Number has a linear (Code 39) bar code; the word “of” and the total number of pieces are not shown in the linear (Code 39) bar code.

(17) Total Pieces. Total number (numeric value) of pieces documented by the TCN for this shipment unit. Total Pieces may be expressed as "Piece Number of Total Pieces" to save space on the label -- the Total Pieces value is not shown in the Piece Number linear (Code 39) bar code. Do not zero fill.

(18) 2D (PDF417) symbol. Includes MSL in-the-clear text data, selected TCMD data, and selected supply/unit information per 4.2.2.6. For unit moves only, when the item has been assigned a UII, the concatenated UII shall be included in the 2D (PDF417) symbol.

(19) Deleted.

(20) Deleted.

(21) Deleted.

b. For Unit moves, in addition to the requirements in 4.2.2.6, data for the following elements, as applicable, shall be shown on the MSL:

(1) Unit Line Number (ULN)
(2) Length, Width, Height (this piece)
(3) Unit Identification Code (UIC)
(4) Commodity/Special Handling Code (air or water)
(5) Vehicle Serial Number
(6) Equipment Description
(7) Bumper Number (Army/Navy only)
(8) Model Number (Army/Navy only)

Source: https://assist.dla.mil -- Downloaded: 2016-12-01T07:08Z
Check the source to verify that this is the current version before use.

c. Additional information. Optional marking includes equipment serial number, NSN, and commercial tracking number and/or bar code.

d. Local Processing Data. Shippers may add local internal processing information to the label, such as DLA distribution information, as long as it is clearly marked and does not interfere with the orientation and placement of MSL data. Additional data may be required by the contract or added based on trade agreements.

4.2.2.6 MSL 2D (PDF417) symbol coding requirements. Each MSL 2D (PDF417) symbol shall contain the data elements from the applicable figure in Table IV for encoding MSL text, TCMD data, and supply line item information.

a. The data elements include MSL information, header TCMD data (T_0 through T_3) and the respective trailer data (T_5 through T_9) for the labeled shipment unit, and the line item contents of the single shipment unit for generic cargo. Table IV-A provides data descriptions, format, and data sources for the MHIA MH10.8.2 DIs used in the 2D (PDF417) symbol and for the data element identifiers (DEI) that identify DoD unique data elements from DoD 4500.9-R and DoD 4000.25-1-M. Tables IV-B and IV-C provide the content of the data streams for sustainment cargo and unit move MSLs.

b. All shipment unit data and line item data in the MSL 2D (PDF417) symbol replicates data from the three sources noted below. If the data is available and a corresponding DI or DEI is shown in the applicable Table IV-B or IV-C, the data shall be entered into the 2D (PDF417) symbol. Blank data fields are not to be encoded except as noted in Table IV, 3.h.(1). When multiple sources for a data element are identified, the sources are prioritized as follows (TCMD source has priority if it exists):

(1) Source 1: Header TCMD data. Format 07 DEI 34 (Table IV-A) shall be used to identify the Document Identifier Code of header TCMD data being documented in the 2D (PDF417) symbol.

(2) Source 2: Supply documentation (DD Form 1348-1A) bar code data or contract data to include IUID information, as applicable, for each supply line item packaged within the shipment unit.

(3) Source 3: Shipment information entered in-the-clear on the MSL.

c. The MSL 2D (PDF417) symbol can only contain limited amounts of data (about 1,000 characters). The following factors shall be considered when determining the amount of available data to record in the 2D (PDF417) symbol.

Source: https://assist.dla.mil -- Downloaded: 2016-12-01T07:08Z
Check the source to verify that this is the current version before use.

(1) A consolidated shipment unit containing multiple internal shipment units shall be documented by encoding only the header TCMD data and its respective trailer TCMD information. The MSL 2D symbol shall not be populated with TCMD information from the internal shipment units. Each shipment unit in a unitized shipment must be marked with a 2D (PDF417) MSL. The MSL 2D (PDF417) symbol does not contain enough capability to consistently record the internal shipment unit prime TCMD data (T_4) and the respective trailer data.

(2) The 2D (PDF417) symbol for a consolidated shipment unit of multiple shipment units, or a mix of line items and multiple shipment units, shall not contain any line item information and shall be marked with an in-the-clear text message that shall be entered at the bottom of the 2D (PDF417) symbol stating "NO LINE ITEM DATA" and it shall be entered into the Format 07 DEI 35 (free text comment) area of the MSL 2D (PDF417) symbol for reprinting purposes. If line item data is still desired for a shipment, it should be included on an alternate form of high capacity AIT media.

(3) It may not be possible to document the supply line items of an entire multipack or consolidated shipment. If the AIT media can't store all of the line item data required to document the shipment unit, the line item information shall be eliminated from the 2D (PDF417) symbol. An in-the-clear text message shall be entered at the bottom of the 2D (PDF417) symbol stating "NO LINE ITEM DATA" and it shall be entered into the Format 07 DEI 35 (free text comment) area of the MSL 2D (PDF417) symbol for reprinting purposes.

(4) In order to provide space for multiple line item supply data in the 2D (PDF417) symbol of the Generic Cargo MSL, the in-the-clear address data shall only be printed in the 2D (PDF417) symbol of a Generic Cargo MSL for single line item shipments or when no line item data is printed in the bar code. Most multi-piece shipments derive from a single line item document; therefore, the addressing data will usually be available in the 2D (PDF417) symbol for reprinting MSLs when a transshipper needs to split a multi-piece shipment. The in-the-clear address data shall be printed in the 2D (PDF417) symbol of the Unit Move MSL.

d. Metric units of measure may be used in the 2D (PDF417) symbol for selected DIs/DEIs as noted in Table IV-A.

4.2.2.7 MSL bar code symbol printing standards (see Figures 2a and 2b). The three linear (Code 39) bar codes and 2D (PDF417) symbol shall be printed in accordance with this standard with reference to ANSI MH10.8.1, ISO/IEC 16388, and ISO/IEC 15438 for further explanation. ISO/IEC 15416 defines print quality for linear bar codes. ISO/IEC 15415 defines print quality for two-dimensional symbols. Printed symbols will conform to "B" quality standards as defined in the appropriate standard. The requirements are summarized as follows:

Source: https://assist.dla.mil -- Downloaded: 2016-12-01T07:08Z
Check the source to verify that this is the current version before use.

a. Linear (Code 39) bar codes.

(1) The minimum bar height shall be 1/2 inch.

(2) The minimum narrow element dimension (X-dimension) shall not be less than 0.01 inch.

(3) The wide to narrow ratio of the elements should be 3:1. The measure ratio shall be between 2.4:1 and 3.2:1.

(4) The leading and trailing quiet zones shall be not less than 0.25 inches.

(5) The linear (Code 39) bar codes should be presented on shipment units with the bar codes horizontal (picket fence orientation). See paragraph 4.3.2.4 for cylinder applications.

(6) The label should be designed so that two bar codes and/or symbols are not next to each other unless the label is wide enough to reduce the possibility of interference with successful bar code and/or symbol scanning.

(7) The quality of the printed bar code shall meet a grade requirement of 2.5 (B) at the point of production when measured in accordance with ISO/IEC 15416 with a measurement aperture of 0.25 mm and an inspection wavelength of 660 ± 10 nm.

b. 2D (PDF417) symbol. For technical details, see Table IV.

4.2.2.8 Human readable interpretation (HRI). The HRI for each of the linear (Code 39) bar codes should appear above, below, or in line with the linear bar code. When in line, a 0.25 inch quiet zone shall be provided.

4.2.3. DoD shipments sent through the U.S. Postal Service and commercial parcel services (Fed-Ex). Shipments originated by DoD activities and sent through the U.S. Postal Service and by commercial parcel services must comply with the U.S. Postal Service domestic mail and commercial carrier requirements in addition to the requirements of this standard.

4.3 Placement of identification and address markings.

4.3.1 Placement of identification markings on unit packs and intermediate containers (see Figure 1). Identification markings on unit packs and intermediate containers shall be so located as to allow the markings to be easily read and to ensure that the markings will not be destroyed when the pack or container is opened for inspection or until its contents have been used. The marking surface of a unit pack shall be the outermost wrap, bag, or container of the unit pack. When a barrier bag is used within another unit container, both the bag and the outermost container must be marked. Bundled items should be marked with a tag or by affixing a paper label under one of the bundled ties. The required markings should be placed so that they are not obscured by any strapping or closure tape.

Source: https://assist.dla.mil -- Downloaded: 2016-12-01T07:08Z
Check the source to verify that this is the current version before use.

4.3.2 Placement of identification and address markings on exterior shipping containers, palletized unit loads, and unpacked items (see Figures 3 thru 14).

a. The exact location of the identification markings may vary slightly. They shall be applied to the upper left two-thirds of the side of the container having the greatest overall, usable marking surface. Specific requirements for the placement of the identification markings on various containers are discussed in the following paragraphs. The required markings shall not be obscured by cleats, strapping or closure tape. Unless otherwise specified in the contract or solicitation or when required by the carrier, such as parcel post, one end and the top and bottom of every external container shall be free of markings. Marking materials used shall meet the requirements specified in Section 5. Unless otherwise specified by the cognizant activity, the size of the identification marking lettering shall be as specified in 5.1.9.

b. Address labels should be affixed at a suitable location where there is minimum risk of damage and in accordance with the provisions of 4.3.2. For RFID-enabled address labels, see 4.9.2. If a label location is not specifically identified in this standard, shippers are referred to ANSI MH10.8.1 for additional guidance.

(1) Required address markings shall be placed on the identification-marked side of exterior shipping containers. If a container is too small to accommodate the address markings on the identification-marked side, the address markings/label shall be applied on the opposite side or attached to a paper shipping tag (see 5.1.3) or marking board/panel (see 5.1.8). When the surface of the shipping container or material such as pipe, steel, or wood does not lend itself to direct application of the MSL, or the MSL obscures other required markings on a shipping container, the label shall be attached to a paper shipping tag, marking board or marking panel. The tag shall be large enough to accommodate the label without folding. Separate tags shall be used for identification and address markings.

(2) Stencil marking alone is not an appropriate alternative for address marking of shipments because stenciling cannot accommodate the bar code requirements.

Source: https://assist.dla.mil -- Downloaded: 2016-12-01T07:08Z
Check the source to verify that this is the current version before use.

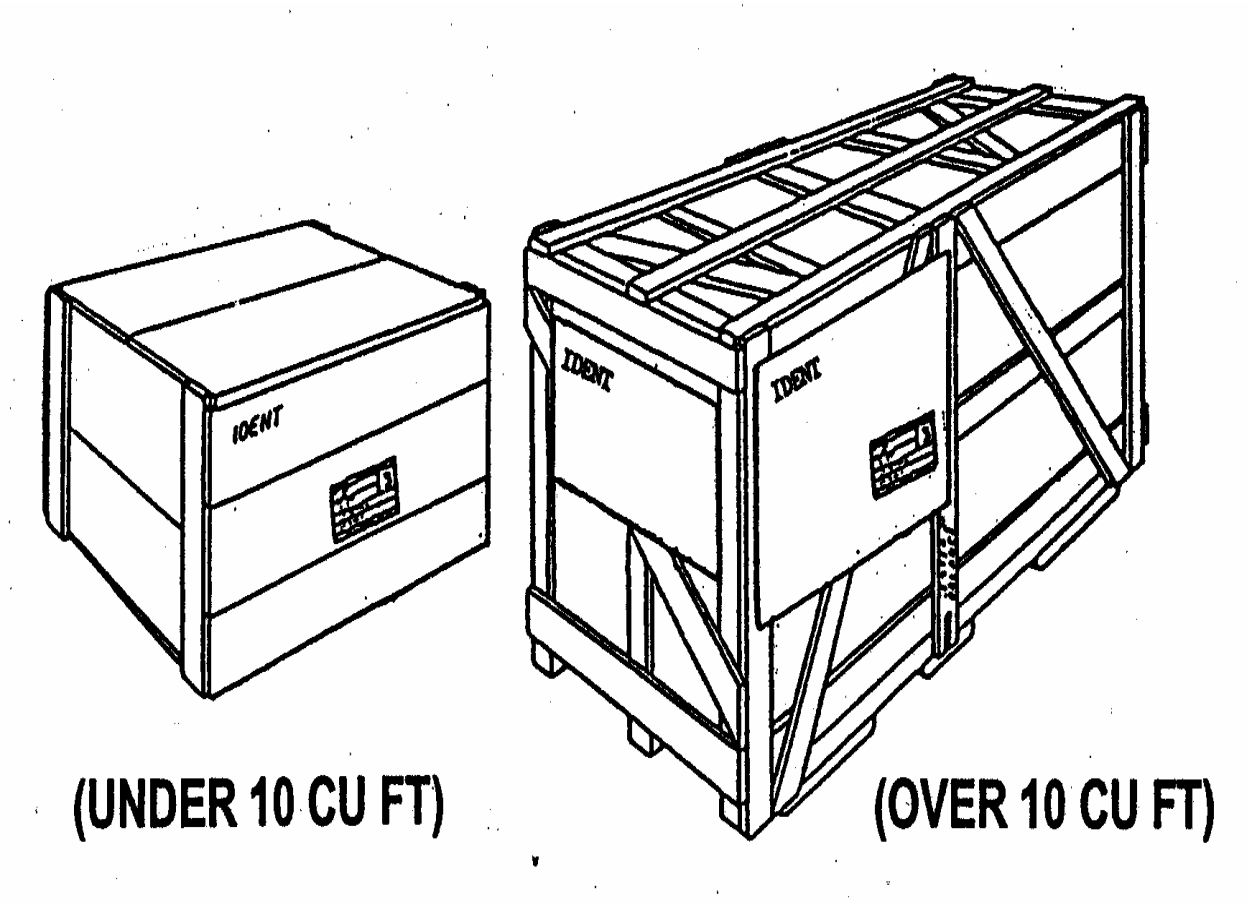

FIGURE 3. Placement of identification and address markings on boxes and crates. For bar code markings, see Figures 20 and 21.

Source: https://assist.dla.mil -- Downloaded: 2016-12-01T07:08Z
Check the source to verify that this is the current version before use.

4.3.2.1 Boxes and crates. See Figure 3.

a. Boxes and crates 10 cubic feet and over shall have additional identification markings placed on the end of the container to the left of the identification-marked side. Placement of identification markings on the end of boxes and crates under 10 cubic feet is optional. Regardless of size, identification markings may be stenciled or printed directly on the container or applied by use of a stenciled or preprinted label. If no other adequate marking surface is available, cleats may be used as part of the marking surface. If the exterior surface is not suitable for direct marking application, a marking board/panel may be used.

b. The address label shall be placed on the identification-marked side and right of center on a vertical face, allowing a minimum of 5 cm (2 in) from all edges of the box or crate. An additional address label may be placed on the identification-marked end for styles which, because of their configuration, allow access by materials handling equipment only to the end of the container.

4.3.2.2 Bales and cloth-covered bundles (see Figure 4). The identification markings on bales shall be stenciled on the upper two-thirds of the side of the bale having the largest marking surface area. Bales with a presewn end and a wire-tied ear on the opposite end shall have the NSN, quantity, and UI applied on the presewn end. When both ends have wire-tied ears, no identification markings shall be applied on the ends. On cloth-covered bundles, identification markings shall be stenciled on the upper two-thirds of the side of the bundle as close to the left side as possible. When direct stenciling is used, there is no need to coat the cloth, provided the markings do not become smeared or illegible because of any absorption into the cloth. To ensure that the marking is both permanent and readable, the cloth bundle may be given a smooth coat of sand-colored lacquer, enamel, or paint over the area to be marked before the marking is applied. When stenciling is not appropriate for bales or cloth-covered bundles, preprinted labels or tags may be used. Address labels for bales and bundles shall be applied to the lower two-thirds of the identification-marked side or to the wire-tied ear with a tag.

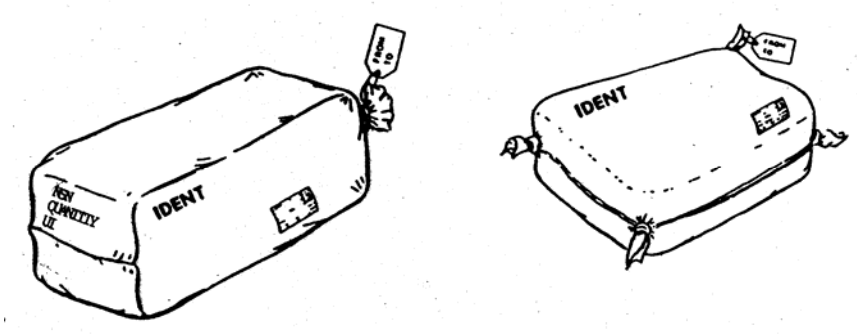

FIGURE 4. Placement of identification and address markings on bales and cloth-covered bundles. For bar code markings, see Figure 23.

Source: https://assist.dla.mil -- Downloaded: 2016-12-01T07:08Z
Check the source to verify that this is the current version before use.

4.3.2.3 Paper shipping sacks, bags, and textile/laminated textile bags (see Figure 5). Markings shall be printed or stenciled on the side of the sack or bag that does not bear the certificate of compliance of the sack manufacturer. Commercially packed commodities shall have the required markings stenciled and centered on one face of the sack or bag. When the printing area is too small, spacing of the printing may be altered proportionately and lines may be consolidated. If the stenciled markings are not legible, they shall be machine printed on a tag or label. If a bag is closed by stitching, an identification tag (not an address label) may be fastened to the bag by stitching at the time of closure. If the top of a bag has ears, the appropriate tag shall be affixed to one of the ears. Address markings shall be placed on a label or tag. When a label is used, it shall be applied below the identification markings. If the bag is closed by stitching, a tag may be fastened to the bag by stitching when closure is made. If the top of the bag has ears, the tag shall be affixed to one of the ears.

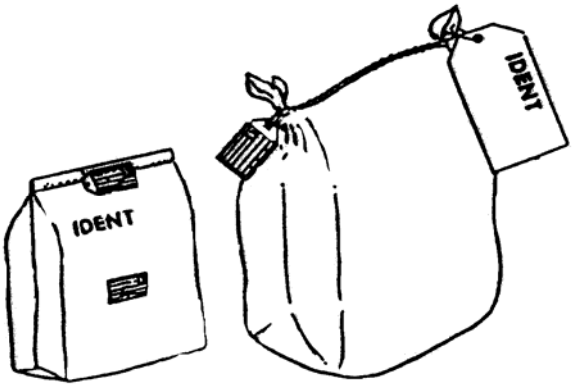

FIGURE 5. Placement of identification and address markings on sacks and bags. For bar code markings, see Figure 23.

4.3.2.4 Barrels, drums, and other cylindrical containers (including empty containers) (see Figure 6). Identification markings shall be stenciled or preprinted on the upper one-third of filled barrels, pails, kegs, drums, and reusable metal containers. In addition to the required markings on 50- and 55-gallon drums or barrels with non-removable heads, identification data (less weight) and shelf-life markings shall also be shown on the head. Forest-green containers shall be marked with yellow or white lettering. Although the preferred methods of application are stenciling and preprinting, labels or tags may be used when a container is too small for either method. However, unless otherwise approved by the cognizant activity, labels or tags shall not be used for identification markings on metal containers, unless the containers are too small to accommodate the stenciled or preprinted markings. Also, if labels are used for these markings, only pressure-sensitive labels shall be used on cylindrical containers and metal drums. Markings shall be avoided in the space 6 inches above or below the center line of the body sidewall for barrels not swaged with rolling hoops. On empty barrels, drums, and cylindrical containers, identification markings shall be applied on the top and on the upper one-third of the side by attaching labels or

Source: https://assist.dla.mil -- Downloaded: 2016-12-01T07:08Z
Check the source to verify that this is the current version before use.

tags. The preferred location for the address label is on the middle one-third of the identification marked side of the container. However, if space is not available in this location, the address label shall be placed in a conspicuous location in close proximity to the identification markings. A flat surface of the container is preferred to accommodate scanning of the linear bar codes and 2D (PDF417) symbol. If space is not available on the surface of the container for the address label, the label shall be placed on a shipping tag.

4.3.2.5 Miscellaneous articles and unpacked items such as spools, reels, rods, coils of wire and cable, and paper- and cloth-wrapped rolls (see Figure 7). Identification markings shall be applied on two tags securely attached to items such as rods and bars. One of the tags shall be bound to the item with burlap or other suitable covering, with each end of the cover securely fastened. The other tag shall be securely attached to the item with a wire or twine (see 5.1.3). On reels or spools of cable and wire, identification markings shall be stenciled on the side of the reel or spool. When this area does not permit stenciling, markings may be applied by using a label. On coils of wire, identification markings shall be applied on two tags securely attached to the coil. On paper- and cloth-wrapped rolls, identification markings shall be applied by stenciling, printing, or labeling. Prior to stenciling cloth- wrapped rolls, the marking area shall be given a smooth coating of sand-colored lacquer, enamel, or paint. One end of wrapped rolls shall contain NSN, quantity, and UI markings. Address markings shall be applied to these types of miscellaneous articles and unpacked items by using labels on flat areas or on tags as shown.

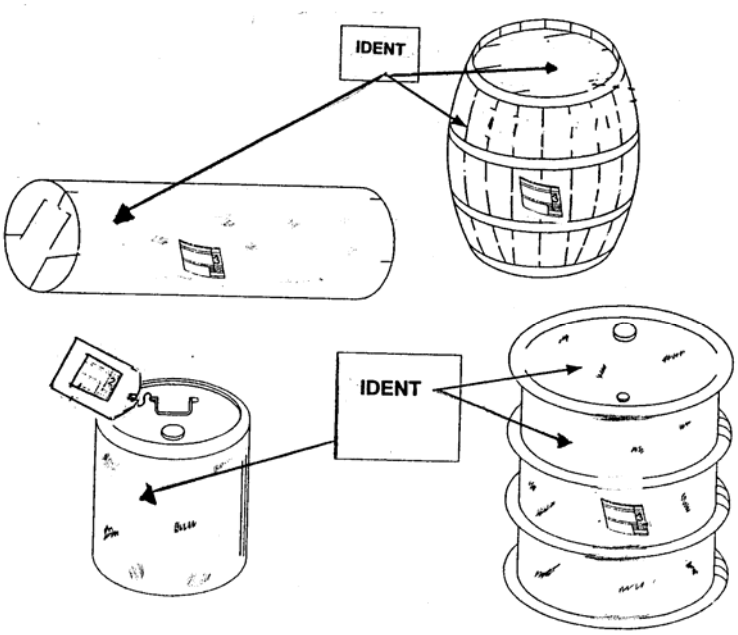

FIGURE 6. Placement of identification and address markings on barrels, drums, and other cylindrical containers. For bar code markings, see Figure 24.

Source: https://assist.dla.mil -- Downloaded: 2016-12-01T07:08Z
Check the source to verify that this is the current version before use.

4.3.2.6 Unpacked major equipment (except unpacked vehicles) (see Figure 8.) Identification and address markings shall be either stenciled on a marking board/panel applied to the most suitable location on the item, or they shall be printed on a label attached directly on the equipment's surface with ASTM D 5486, type I, class 2 tape. The tape shall be placed over the label and shall extend half an inch or more from its edges. For unpacked vehicle marking requirements, see 4.3.2.9.

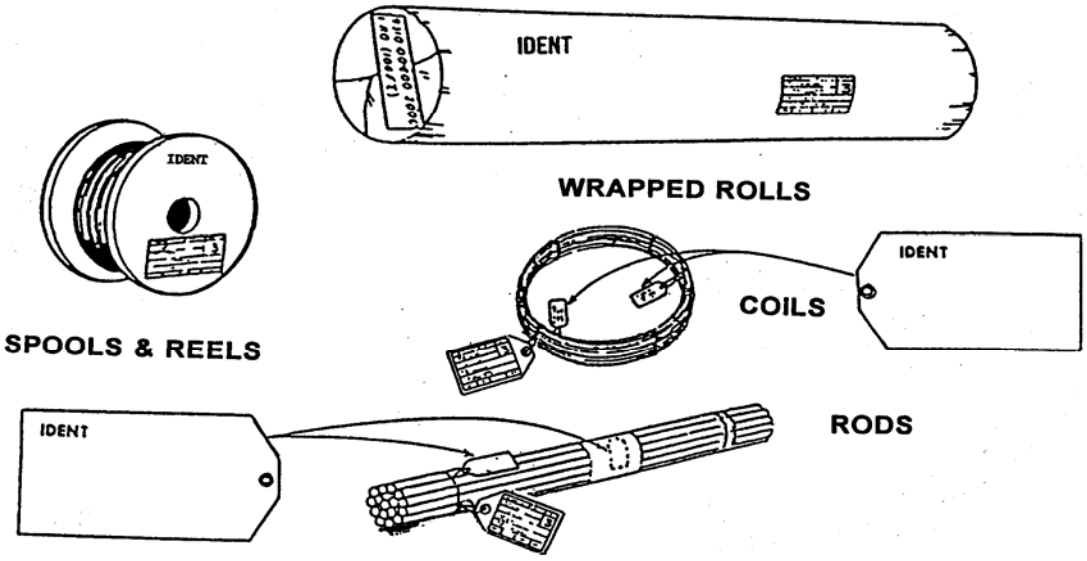

FIGURE 7. Placement of identification and address markings on miscellaneous articles and unpacked items. For bar code markings, see Figures 23 and 25.

Source: https://assist.dla.mil -- Downloaded: 2016-12-01T07:08Z
Check the source to verify that this is the current version before use.

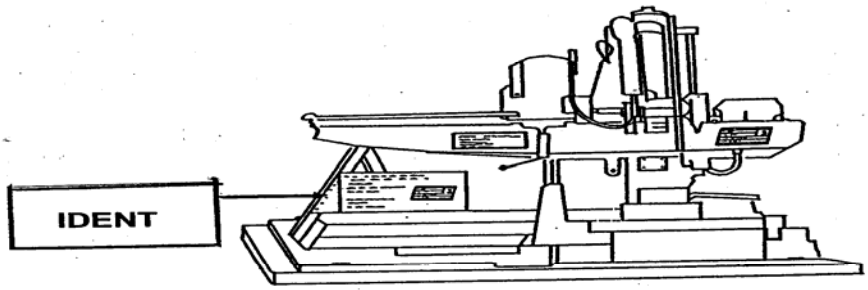

FIGURE 8. Placement of identification and address markings on unpacked major equipment.

4.3.2.7 Palletized unit load (see Figure 9). When a palletized unit load is formed, the individual containers comprising the unit load shall already be marked with the appropriate identification information. Unless otherwise specified, unit loads of box-packed items shall have one or more boxes turned to present a blank surface for marking. The palletized unit load shall have the exterior container identification and address markings applied as specified herein and as shown in Figure 9. For palletized unit loads 10 cubic feet and over, additional identification markings shall be placed on the end of the load adjacent to the identification-marked side. When a fiberboard container such as a triple-wall fiberboard box is used for unitizing a load in lieu of palletization, all required markings, including the address label, may be placed directly on the flat fiberboard surface. Unitized tires shall be stacked on pallets, sidewall to sidewall, to prevent the markings on the individual tires from being seen around the circumference of the load. The gross weight for palletized/containerized unit loads shall include the weight of the pallet or container base. Because palletized loads are often stacked two or three high when shipped or stored, the markings shall be large enough to be read from a distance. The size of the lettering (see 5.1.9) shall be proportionate to the overall size of the unitized load but shall be not less than three-fourths of an inch in height. Refer to the Defense Transportation Regulation, DoD 4500.9-R, Part II, Chapter 203 for marking of 463L System pallets.

a. Exterior container identification markings (see 4.1.2) shall be placed on a marking board or panel, securely attached to two adjacent sides of the palletized load, by using a label or by direct stenciling. Palletized loads with smooth, flat surfaces may have identification markings stenciled directly on two surfaces, with markings extending from one container to another.

Source: https://assist.dla.mil -- Downloaded: 2016-12-01T07:08Z
Check the source to verify that this is the current version before use.

b. Except for DSCP C&T items, palletized loads of containers of items having different NSNs shall be marked as multipacks. Palletized loads of DSCP C&T items having different NSNs shall be marked as specified in the contract or order.

c. When a palletized load is covered with stretch-wrap film, pressure-sensitive labels containing the identification and address markings may be placed on the outermost layer of wrap, on either side of the load in addition to other marking requirements. Variations are authorized based on local operations and capabilities (for example, a marking board/panel positioned on the pallet before the last layer of wrap is applied).

d. The address label(s) attached directly to a container on the pallet or to a marking board or panel shall be positioned as follows:

(1) The address label shall be placed right of center on a vertical face, allowing a minimum of 5 cm (2 in) from all edges of the unit load.

(2) The bottom edge of the address label containing the unit load information should be within the range of 81 cm to 122 cm (32 to 48 in) from the bottom of the pallet. If the loaded pallet is less than 102 cm (40 in) in height, the label should be placed as high as possible on the pallet, but not closer than 5 cm (2 in) to the natural top of the unit load.

4.3.2.8 Wood products. Identification markings shall consist of the NSN only. If the NSN is not available, the item description as cited in the contract (e.g., door, wood, exterior, etc.) shall be used. Identification markings shall be applied by stenciling the most suitable area. Address markings shall be applied by labeling or tagging. When wood products are shipped on a single conveyance to more than one consignee, address markings shall be provided on each shipment unit.

4.3.2.8.1 Bundled wood products (see Figure 10). When identification markings are applied by stenciling, they shall be placed directly on the side of the bundle. If the area does not permit stenciling, two or more identification tags may be attached to the bundle. Markings may also be stenciled directly on a marking board/panel or may be applied by using a stenciled label. Address markings, when required, shall be placed below the identification markings and shall be applied by stenciling or by placing them on a marking board/panel. When a marking board/panel is used, it shall be securely fastened to the bundle. Fiberboard shall not be used as a marking board/panel for bundled wood products. However, fiberboard, wood, or wood-based panels may be used as marking boards/panels for bundled wood pallets. In addition to the NSN and contract number, OCONUS shipments of bundled wood products require address markings. For wrapped bundles of wood products, the address label may be applied directly below the identification markings. For unwrapped bundles, the address label may be attached to a paper shipping tag secured to the bundled unit. Prior to shipment, a transparent, waterproof laminate shall be placed over the address label.

Source: https://assist.dla.mil -- Downloaded: 2016-12-01T07:08Z
Check the source to verify that this is the current version before use.

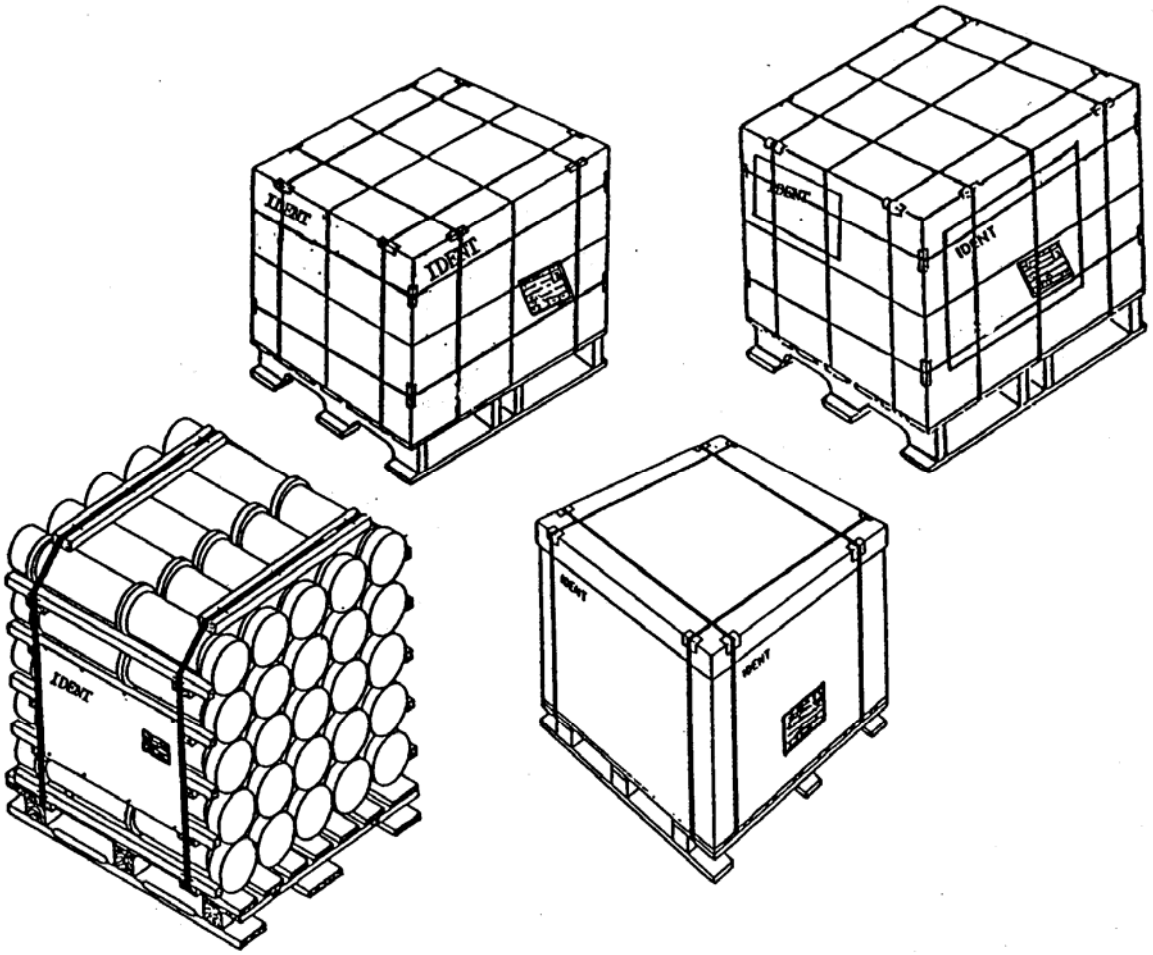

FIGURE 9. Placement of identification and address markings on palletized unit loads. For bar code markings, see Figure 25.

Source: https://assist.dla.mil -- Downloaded: 2016-12-01T07:08Z
Check the source to verify that this is the current version before use.

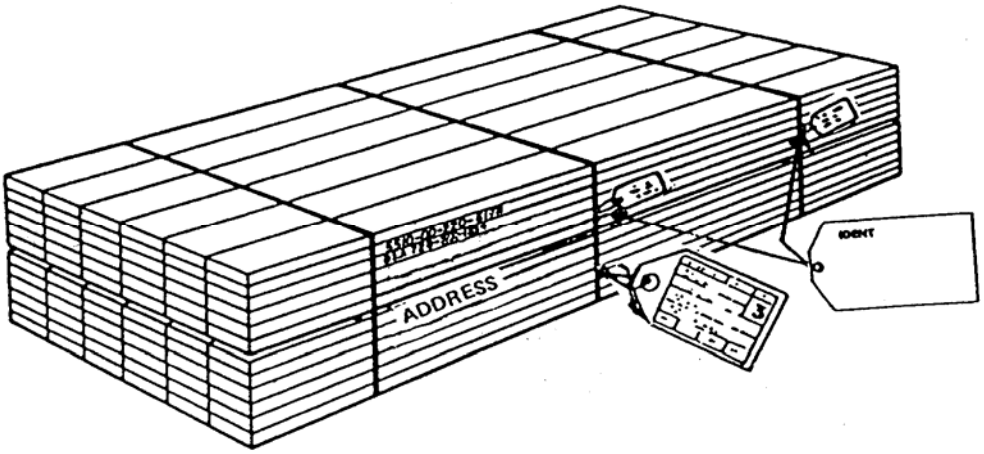

FIGURE 10. Placement of identification and address markings on bundled wood products.

4.3.2.8.2 Unstrapped (loose) wood products (piles, poles, etc.) (see Figure 11). Identification markings shall be applied by either stenciling or tagging. If tags are used, they shall be securely attached to the unstrapped (loose) pieces. Metal or plastic tags may be used when authorized by the procuring activity. At least 10 percent of the total pieces in a single shipment shall be marked. Address markings shall be affixed on the side of the load by stenciling or labeling. For materiel such as poles and ties that is preservative-treated with oil solutions, stenciling shall be accomplished with aluminum-leaf paint.

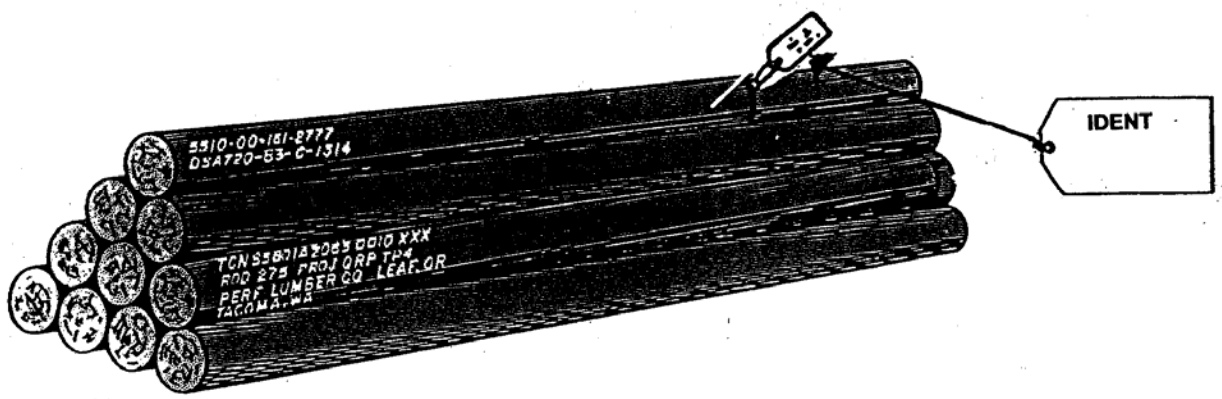

FIGURE 11. Placement of identification and address markings on unstrapped (loose) wood products.

Source: https://assist.dla.mil -- Downloaded: 2016-12-01T07:08Z
Check the source to verify that this is the current version before use.

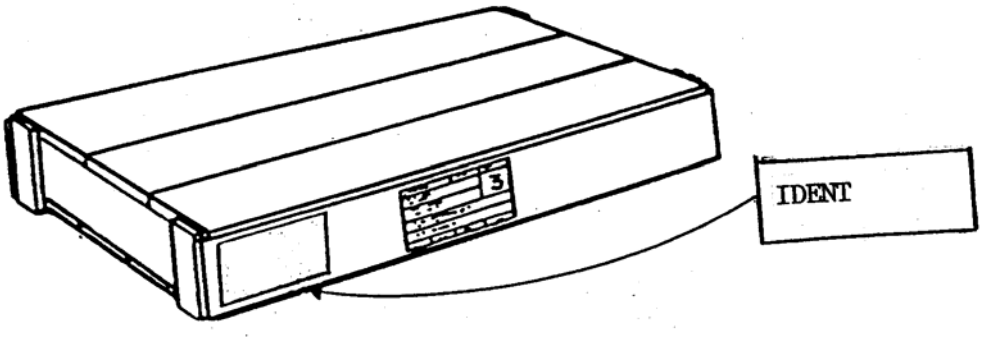

FIGURE 12. Placement of identification and address markings on miscellaneous wood products in containers.

4.3.2.8.3 Miscellaneous wood products in containers (doors, windows, and moldings) (see Figure 12). Identification markings shall be applied by stenciling or labeling. Address markings shall be applied to the identification-marked side of the container.

4.3.2.9 Unpacked vehicles (see Figure 13). Identification markings are not required on unpacked vehicles that are shipped within CONUS. Address markings are not required on driveaway, truckaway, railaway, or towaway shipments within CONUS. The address marking of vehicles for unit movement overseas shall be in accordance with the applicable regulations of the military department involved as required by DoD 4500.9-R. Address markings for CONUS shipments and identification and address labels for OCONUS generic cargo vehicle shipments shall be applied to a marking board/panel or applied by attaching a preprinted label on the vehicle's surface with ASTM D 5486, type I, class 2 tape. When the address label is attached directly to the surface of the vehicle, the label shall be placed either on the rear of the vehicle or on the right side (passenger side) near the rear of the vehicle. When marking boards/panels are used, they shall be secured on the front of the vehicle. When possible, the markings shall be positioned on the vehicle at a height of not more than 6 feet or less than 4 feet. When the use of these locations is not practicable, the best alternate location shall be selected.

4.3.2.10 Commercial- or Government-owned (or -leased) shipping containers (SEAVANs) and military-owned demountable containers (MILVANs) (see Figure 14). Exterior container identification markings shall not be placed on the outside of a SEAVAN/MILVAN. A completed MSL shall be attached to the seal on the SEAVAN/MILVAN or shall be attached at the rear of each SEAVAN/MILVAN. As per DTR direction, all individual shipment units documented with a TCN, including multiple shipment units inside a consolidation container, must be marked with an MSL to facilitate DTS movement, in-transit visibility, and in-check/receipt processing. Unit packs, containers, palletized unit loads, and unpacked items do not require individual address markings or address bar code marks if they are all unitized by the shipper of origin into one single

Source: https://assist.dla.mil -- Downloaded: 2016-12-01T07:08Z
Check the source to verify that this is the current version before use.

shipment unit and loaded into a SEAVAN/MILVAN for delivery as a complete container load to the ultimate consignee of the single shipment unit – however, the Transportation Control Movement Document (TCMD) TCN for the single shipment unit inside the van will be different from the TCN for the SEAVAN/MILVAN. CCP activities which receive shipments for consolidation are not required to obliterate address labels applied by the shipper of origin or to relabel the consolidated shipment units.

4.3.2.11 Full rail carload and full truckload shipments. Full rail carload and full truckload shipments moving as a single shipment unit from a single consignor to a single consignee require at least one completed MSL attached to the container or palletized load located closest to the door. Additional MSLs may be placed on other containers or palletized unit loads in the shipment.

4.3.2.12 Less than rail carload and less than truckload (LTL) shipments. A MSL is required on shipping containers, palletized unit loads, and unpacked items for less than rail carload and LTL lots. Exterior container markings are not required on the train car or truck.

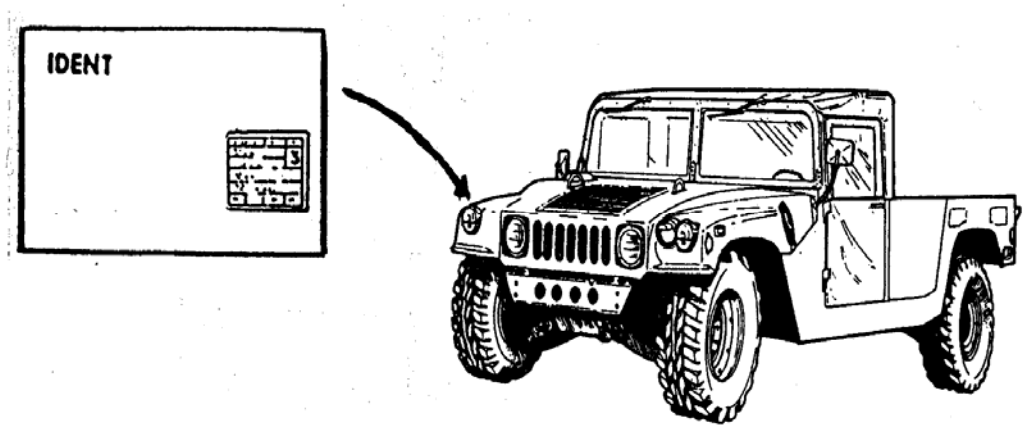

FIGURE 13. Placement of IDENT and address markings on a marking board for an unpacked vehicle.

4.3.2.13 Tires (loose). Identification or address markings on tires shall be placed on tags affixed to the tires with twine or by labels affixed to the outside sidewall or on the tire tread. Labels with rubber based adhesives such as those conforming to MIL-PRF-61002, Type Optional, Grade A, Style 3-Rubber, Composition (b) (laminated) shall be used. In addition to the required identification markings, tires shall be marked with the cure date and the expiration or inspect/test date (choose one). Tires requiring DOT markings molded into the sidewall do not require the cure date to be marked since the last three digits of the DOT markings indicate the week and year of the manufacture of the tire (cure date). Only the expiration or inspect/test date (choose one) is required.

Source: https://assist.dla.mil -- Downloaded: 2016-12-01T07:08Z
Check the source to verify that this is the current version before use.

Bar code markings that are required for exterior containers (see 4.4.1.2) shall be applied to all tires or an MSL. The MSL shall be affixed to a paper shipping tag or it shall be affixed directly to the tire. Additional guidance on the marking of tires is contained in MIL-DTL-4.

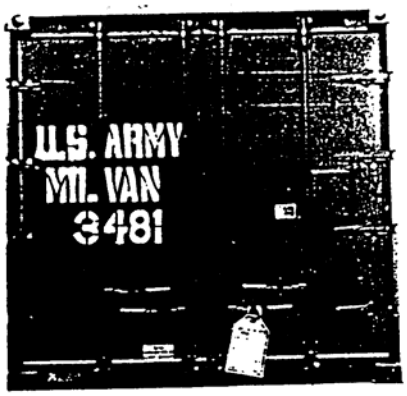

FIGURE 14. Placement of address markings (MSL attached to a paper shipping tag) on a SEAVAN or MILVAN.

4.3.2.14 Tubular products (loose). Identification markings shall be applied by labels or weather-resistant tags. Plastic or metal tags may be used when authorized by the procuring activity. The address label shall be affixed to a flat surface on the side of the load or to a tag.

4.3.2.15 Tubular products (bundles and lifts). Two weather- resistant tags containing the identification markings shall be applied to 10 percent of the load. Plastic or metal tags may be used when authorized by the procuring activity. Markings may also be stenciled or labeled on a marking board/panel, which shall be attached to the load by ASTM D 5486, type I, class 2 tape or metal bands as specified in ASTM D 3953 (used with ASTM D 4675). The address label shall be affixed to a flat surface on the side of the load or on the marking board/panel.

4.4 Identification linear (Code 39) and 2D (PDF417) bar code markings (non-ammunition containers) (see Figure 1). Identification linear (Code 39) and 2D (PDF417) bar code markings, as applicable, are required for DoD and contractor- or vendor- originated shipments, unless specifically exempted in the contract. Linear (Code 39) bar code markings in accordance with ISO/IEC 16388 and the 2D (PDF417) symbol formatted in accordance with ISO/IEC 15438 and Table IV of this standard are required on unit, intermediate and exterior containers, and loose or unpacked items (see 4.4.1.1 and 4.4.1.2). For shipments of UII items, the 2D (PDF417) symbol shall be used for listing the concatenated UIIs (DI 25S) and the data normally included in the linear (Code 39) identification bar codes (see 4.4.2.3 and 4.4.3.3.1). Application of the linear bar codes is not required when the 2D (PDF417) identification symbol is used. For shipments of other than

Source: https://assist.dla.mil -- Downloaded: 2016-12-01T07:08Z
Check the source to verify that this is the current version before use.

UII items, use of the 2D (PDF417) symbol for identification marking is optional. Linear (Code 39) identification bar codes can be applied directly with the identification marking or printed onto a label; the 2D (PDF417) symbols must be printed onto label stock. The bar codes will be located in close proximity to the identification markings (see 5.1). Identification and 2D (PDF417) bar code marking requirements for ammunition containers are specified in 5.6.

4.4.1 Content specifications and application techniques (non-ammunition). Information and illustrations on the content and placement of bar code markings on containers of non-ammunition commodities are in 4.4.1.1 thru 4.4.3.16. Identification bar coding for the DD Form 1348-1A (Issue Release/Receipt Document) is in 5.4. Bar code requirements for the MSL are in 4.2.3. Bar code marking requirements for ammunition containers are in 5.6. When objective evidence can be provided, bar code labels may be accepted with a Certificate of Conformance (COC). However, the COC does not supersede the need to scan the bar code label after any process that may affect the readability of the bar code, such as the application of tape. Identification bar code markings shall not be obscured by application of strapping or tape.

4.4.1.1 Identification linear (Code 39) and 2D (PDF417) bar code content for unit packs and intermediate containers (see Figures 1, 18 and 19). The NSN/NATO stock number, concatenated UII(s) and assigned serial number(s) shall be identified with machine readable symbology using the required data carrier(s) (linear (Code 39) or 2D (PDF417)) on unit packs and intermediate containers. The linear (Code 39) bar coded NSN/NATO stock number shall consist of the basic 13 data characters. Unless otherwise specified in the contract or purchase order, prefixes and suffixes to the stock number, as well as spaces and dashes, shall not be bar coded. For information on the placement of linear (Code 39) bar code markings on unit packs and intermediate containers, see 4.4.2.

Source: https://assist.dla.mil -- Downloaded: 2016-12-01T07:08Z
Check the source to verify that this is the current version before use.

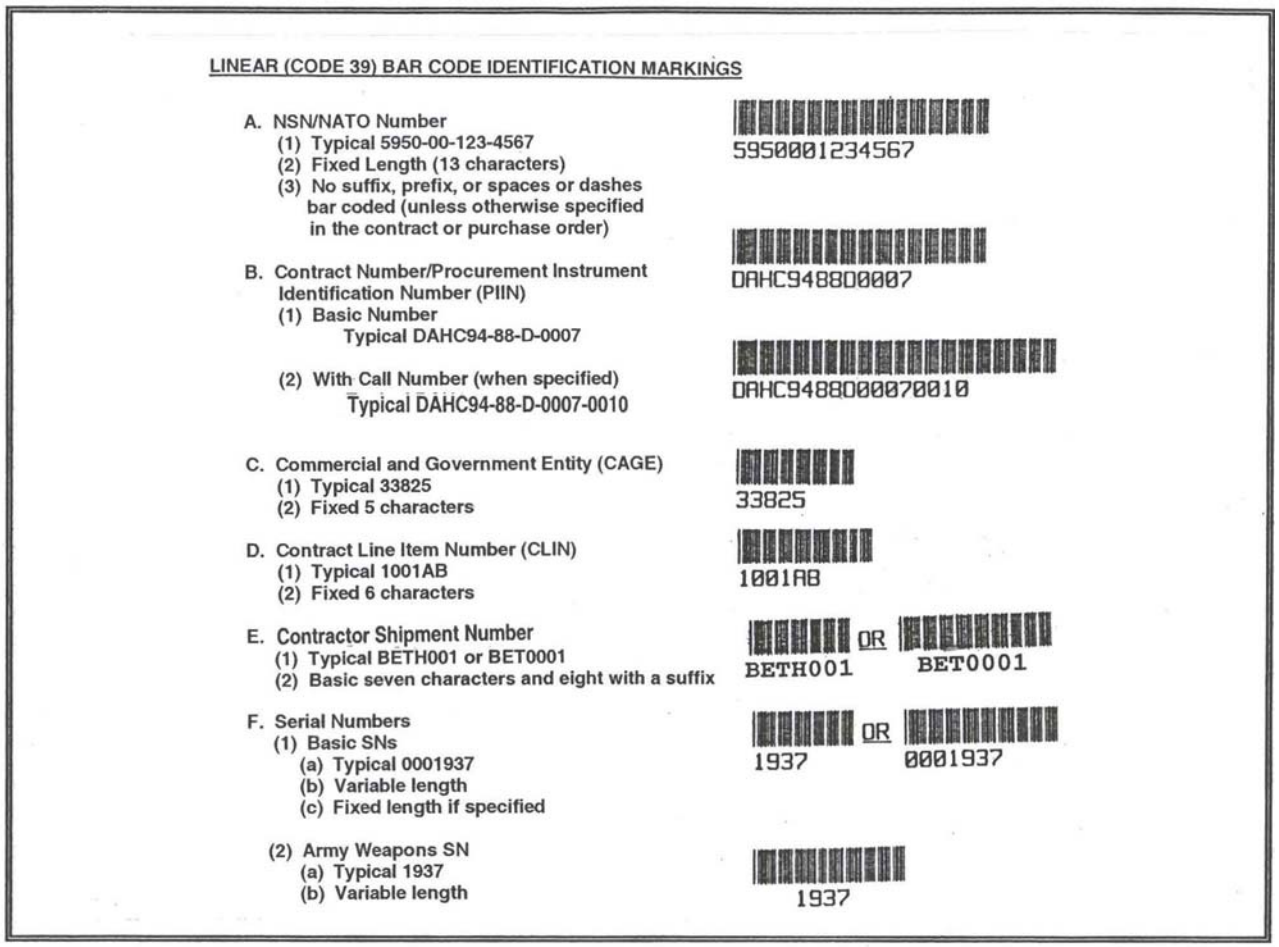

FIGURE 15. Examples of typical linear (Code 39) bar code fields.

4.4.1.2 Identification linear (Code 39) and 2D (PDF417) bar code content for exterior containers (see Figures 1, 15 and 22). Each exterior shipping container shall be marked in the applicable machine readable symbology using the required data carrier(s) (linear (Code 39) or 2D (PDF417)) with the following information: NSN/NATO stock number, contract or order number (including the call number), CAGE code of the company awarded the contract, CLIN (when used), contractor shipment number, concatenated UII(s) (see 4.4.3.3.1) and assigned serial number(s). The NSN shall be bar coded as specified in 4.4.1.1. When the CLIN (when used) is linear (Code 39) bar coded, it shall be encoded using six characters, including zero fillers placed to the left of the number, for example, 0001AB. For multiple CLIN(s), only the first number will be linear (Code 39) bar coded. The contractor shipment number, when assigned, will be encoded using seven characters and eight if including a suffix, in accordance with the DFARS Appendix F, Part 3. The first three positions will always be alpha, the last three always numeric, and the fourth either alpha or numeric, for example, BETH001 or BET0001. For linear (Code 39) bar code configurations and format information, see 4.4.1.4 thru 4.4.1.6. For information on the placement of bar code marking on exterior containers, see 4.4.3.

Source: https://assist.dla.mil -- Downloaded: 2016-12-01T07:08Z
Check the source to verify that this is the current version before use.

4.4.1.3 Linear (Code 39) bar code symbology. Deleted.

4.4.1.4 Identification linear (Code 39) bar code configurations and basic message formats (see Figure 16). The two linear (Code 39) bar code configurations are vertical (ladder) and horizontal (picket fence). Unless otherwise specified in the contract or order, all linear (Code 39) bar codes shall be in a horizontal configuration. The two basic message formats are stacked and in-line. When two or three data messages are linear (Code 39) bar coded, one of the two basic formats can usually be utilized. However, a stacked format is preferred. When three or more data messages are bar coded in an in-line format, the spacing between messages shall be increased so that false reads will not occur when using a non-contact scanner.

4.4.1.5 Complex identification linear (Code 39) bar code formats (see Figure 17). There may be cases requiring the use of formats more complex than the two basic formats, such as linear (Code 39) bar coding several data messages. A combination format contains two or more columns of stacked format or two or more rows of in-line format. A staggered format is similar to a combination format, but each stack of linear (Code 39) bar codes is staggered, or offset, from the adjacent stack of bar codes. The staggered format satisfies the requirement for a distance of at least 2.25 inches (57.15mm) when there are three or more in-line linear (Code 39) bar codes.

4.4.1.6 Identification linear (Code 39) bar code format information (see Figures 16 and 17). The following format information is listed in the order of preference.

a. Two linear (Code 39) bar code messages:

(1) Stacked.
(2) In-line.

b. Three or four linear (Code 39) bar code messages:

(1) Single stack.
(2) Combination (e.g., 2 stacks of in-line linear (Code 39) bar codes).
(3) Staggered (e.g., 2 staggered stacks of 2).

c. Five to 10 linear (Code 39) bar code messages:

(1) Single stack.
(2) Staggered (e.g., 2 to 4 stacks of staggered linear (Code 39) bar codes).
(3) Combination (e.g., 2 stacks of in-line linear (Code 39) bar codes).

Source: https://assist.dla.mil -- Downloaded: 2016-12-01T07:08Z
Check the source to verify that this is the current version before use.

d. Eleven or more linear (Code 39) bar codes:

(1) Single stack (if space permits).
(2) Staggered (several possible arrangements).
(3) Combination (if 3 or more stacks are required, the spacing between stacks is increased from .5 to 2.25 inches (12.7mm to 57.15mm)).

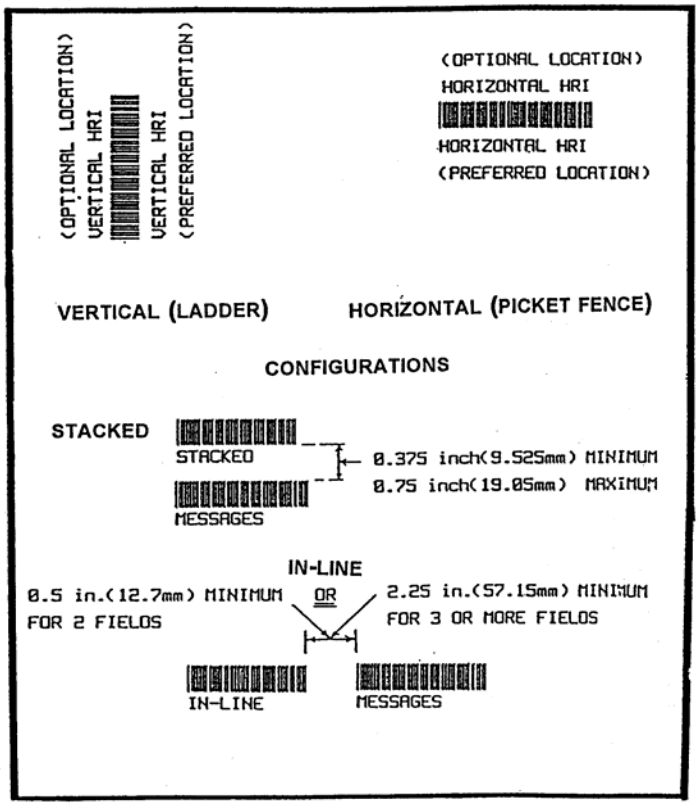

FIGURE 16. Linear (Code 39) bar code configurations and basic message formats.

Source: https://assist.dla.mil -- Downloaded: 2016-12-01T07:08Z
Check the source to verify that this is the current version before use.

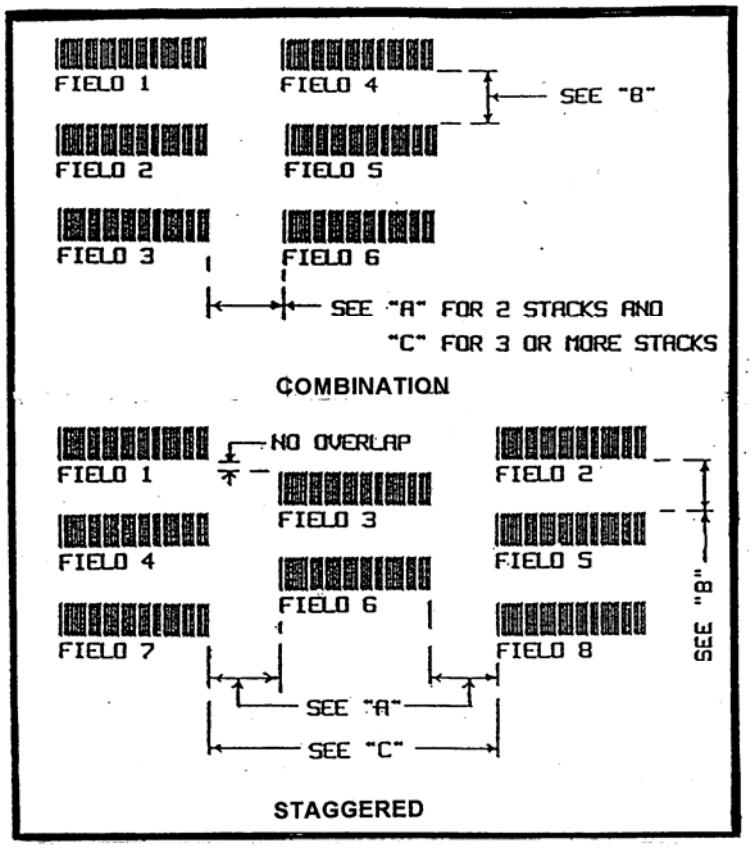

A. 0.5 in (12.7 mm) MINIMUM
B. 0.375 in (9.525 mm) MINIMUM
0.750 in (19.05 mm) MAXIMUM
C. 2.25 in (57.15 mm) MINIMUM

FIGURE 17. Complex linear (Code 39) bar code message formats.

4.4.1.7 Applying identification linear (Code 39) and 2D (PDF417) bar codes on containers (other than wood). On containers other than wood, identification linear (Code 39) bar code markings shall be applied by labeling or by direct printing on the container. Labels are required for 2D (PDF417) symbols. When specified in the contract or purchase order, identification bar code labels generated on thermal printers may be used on unit packs and intermediate and exterior containers. Thermal labels shall be durable, buff-colored stock, or its equivalent. Preprinted labels shall have an untinted, transparent laminate coating, while non-preprinted labels shall have the laminate, or equivalent, applied after the bar code is printed. When an untinted/transparent laminate or equivalent or a stretch/shrink wrap is placed over the bar code labels, the bar code marking shall meet the readability requirements of 5.1.10. Labels shall be constructed of a computer-imprintable paper, with a 1-mil acrylic permanent adhesive, or equivalent. For those applications requiring special label requirements, see 5.1.2.

Source: https://assist.dla.mil -- Downloaded: 2016-12-01T07:08Z
Check the source to verify that this is the current version before use.

4.4.1.8 Applying identification linear (Code 39) and 2D (PDF417) bar code labels on wood containers. On wood containers, identification bar code markings shall be applied only by labels. The labeling area of the container shall be given a smooth coat of spar varnish or a transparent acrylic, polyurethane, or epoxy coating. A clear/transparent laminate or equivalent shall be placed over the bar code label. In addition to a laminate or adhesive, it may also be necessary to affix the label by stapling. Any commercial-type staple may be used as long as it is placed outside of the bar code and ¼ inch surrounding the bar code quiet zone. The label could be affixed to a piece of card stock that is slightly larger than the label. The card stock would then be stapled to the container with heavy duty staples. For those applications requiring special label requirements, see 5.1.2

4.4.1.9 Identification linear (Code 39) and 2D (PDF417) bar code labels on unit packs and intermediate containers. When MIL-STD-129 marking requirements are specified in the contract or purchase order, labels on unit packs and intermediate containers shall be constructed of a computer-imprintable paper with a 1-mil acrylic permanent adhesive, or equivalent. Printer ribbons of optical character reader (OCR)-grade quality, or equivalent, shall be used to mark the labels. When the unit pack and exterior shipping container are one and the same, only exterior container bar code markings shall be applied. See 4.4.1.7 for other than wood and 4.4.1.8 for wood applications.

4.4.1.10 Identification linear (Code 39) and 2D (PDF417) bar code labels on exterior shipping containers. When bar code labels are printed, the printer ribbons shall be of OCR-grade quality, or equivalent, and shall produce clear, smear-resistant markings. When bar code labels are used on exterior shipping containers, a waterproof, untinted/transparent, plastic, protective laminate such as ASTM D 5486, type I, class 2 tape, or equivalent protection, shall be applied to or shall be inherent to the label.

a. Deleted.

b. Deleted.

4.4.2 Placement of identification linear (Code 39) and 2D (PDF417) bar code markings on unit packs and intermediate containers (see Figures 18 and 19 respectively). The NSN/NATO stock number shall be bar coded and applied so that the linear (Code 39) identification bar code is in the configuration shown. When space does not permit placement of all the required identification bar code markings on one surface of the container, the identification bar code labels or markings can be placed on the opposite side of the container, the adjacent end, or on a tag attached to the container.

Source: https://assist.dla.mil -- Downloaded: 2016-12-01T07:08Z
Check the source to verify that this is the current version before use.

4.4.2.1 Identification linear (Code 39) and 2D (PDF417) bar code markings on transparent containers (see Figure 18). Bar code markings placed inside a transparent container shall be machine readable from the outside of the container. Similarly, identification bar code markings on containers that are shrink/stretch wrapped into a load shall be machine readable from the outside of the load in at least one location and shall meet the readability requirements of ISO/IEC 16388 for linear (Code 39) and ISO/IEC 15438 for 2D (PDF417) bar codes.

4.4.2.2 Identification linear (Code 39) and 2D (PDF417) bar code serial numbers on unit packs and intermediate containers (see Figures 1, 18 and 19). When an item is assigned a serial number, that number shall be applied in-the-clear and bar coded, using machine readable symbology and required data carrier(s) (linear (Code 39) and 2D (PDF417)), to the unit and intermediate container. The in-the-clear and linear (Code 39) bar coded serial number shall be preceded by the abbreviation "SER NO". The letters "SER NO" are not bar coded. The serial number(s) will be included in the 2D (PDF417) bar code, if used. When more than five serial-numbered items are in an intermediate container, the requirements for bar code serial numbers on an exterior shipping container apply, as specified in 4.4.3.3. Serial numbers assigned by the manufacturer solely for indicating the quantity produced shall not be shown.

4.4.2.3 Identification using machine readable symbology for Unique Item Identifiers (UII) on unit packs and intermediate containers (see Figures 1, 18, and 19). When an item is assigned a UII, the concatenated UII will be developed as specified in 3.46.5 and the DoD Guide to Uniquely Identifying Items. The concatenated UII(s) shall be applied to the unit pack and intermediate container using the 2D (PDF417) symbol preceded by the following human readable information:

ID DATA
INCLUDES UII(s)
(if required)

Human readable interpretation text for UII(s) in the 2D (PDF417) symbol is optional. The 2D (PDF417) symbol shall be placed in close proximity to the identification markings. For large data requirements, when the 2D (PDF417) bar code reaches its full capacity, the packing list will be used for the overflow of encoded data.

4.4.3 Placement of identification linear (Code 39) bar code markings on exterior shipping containers.

4.4.3.1 Formats for identification linear (Code 39) bar code data on exterior shipping containers (see Figures 17 and 22). Unless otherwise specified, linear (Code 39) bar codes on exterior shipping containers shall be applied as illustrated in Figure 1 or in one of the following formats, listed in order of preference.

Source: https://assist.dla.mil -- Downloaded: 2016-12-01T07:08Z
Check the source to verify that this is the current version before use.

a. A one-stack format with data fields stacked from top to bottom to include: NSN, contract number, CAGE code of the company awarded the contract, CLIN (if used), contractor shipment number and serial number(s) (if assigned). When a stacked format is used, bar codes shall be left-justified (left-hand (start) characters vertically aligned). For an example of the one-stack format see Figure 22.

b. A two-stack combination or staggered format arranged so that the NSN is above the contract number in the first stack and the CAGE code is in the second stack (see Figure 22).

c. A three-stack horizontal combination or staggered format (see Figure 17).

4.4.3.2 Formats for linear (Code 39) identification bar code tags to be used with exterior shipping containers (see Figure 22). Any linear (Code 39) bar code format discussed herein may be applied to a tag attached to a shipping container. Tags shall be marked by either direct marking or by applying pressure-sensitive labels. If space is available on the identification tag, the identification linear (Code 39) bar code label/marking may be applied to the right or below the identification markings. If space is not available, the linear (Code 39) bar code label/marking may be applied on the reverse side of the tag.

Source: https://assist.dla.mil -- Downloaded: 2016-12-01T07:08Z
Check the source to verify that this is the current version before use.

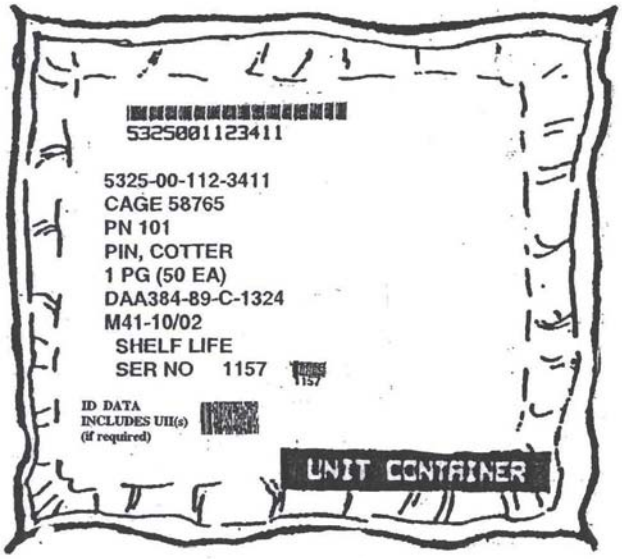

FIGURE 18. Bar code markings on unit packs.

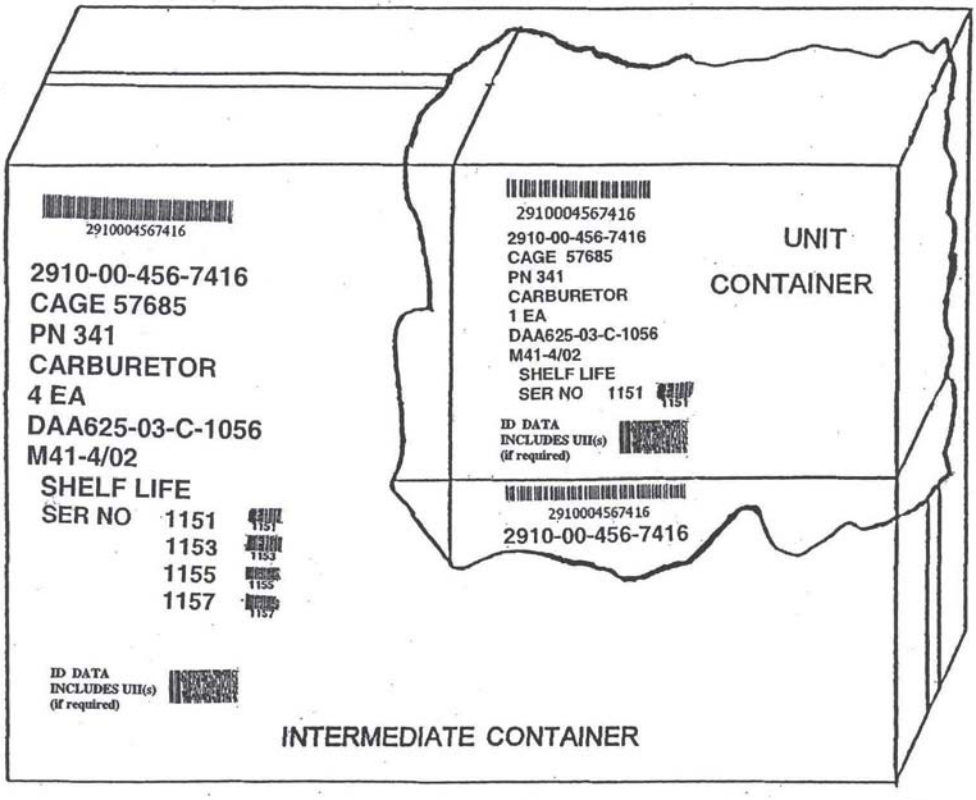

FIGURE 19. Bar code markings on unit and intermediate containers.

Source: https://assist.dla.mil -- Downloaded: 2016-12-01T07:08Z
Check the source to verify that this is the current version before use.

4.4.3.3 Identification linear (Code 39) and 2D (PDF417) bar code serial numbers on exterior shipping containers. When an item is assigned a serial number, that number shall be applied in-the-clear and bar coded, using machine readable symbology and required data carrier(s) (linear (Code 39) and 2D (PDF417)), to the exterior container. The in-the-clear and linear (Code 39) bar coded serial number shall be preceded by the abbreviation "SER NO". The letters "SER NO" are not bar coded. The serial number(s) will be included in the 2D (PDF417) bar code, if used. Serial numbers shall be shown as part of the identification marking except when the item is packed in accordance with 5.2.14.1. The linear (Code 39) bar codes shall be arranged in a stacked, in-line, or combination format. If more than five linear (Code 39) bar codes are required on an exterior container, two serial number lists shall be provided. The first list is to be placed inside the container and shall contain a linear (Code 39) identification bar code for each serialized item. The linear (Code 39) bar code format to be used is optional. A staggered format is recommended when more than 20 serial numbers are bar coded. Bar coding of the second serial number list, which shall be included with the packing list, is optional. In lieu of marking the container with the serial number information, the words "SERIAL NUMBER LIST INSIDE" shall be marked on the identification-marked side of the container. Serial numbers assigned by the manufacturer solely for indicating the quantity produced shall not be shown.

4.4.3.3.1 Identification using machine readable symbology for Unique Item Identifiers (UII) on exterior shipping containers. When an item is assigned a UII, the concatenated UII will be developed as specified in 3.46.5 and the DoD Guide to Uniquely Identifying Items. The concatenated UII shall be applied to the exterior container using the 2D (PDF417) symbol, preceded by the following human readable information:

ID DATA
INCLUDES UII(s)
(if required)

Human readable interpretation text for the UII(s) in the 2D (PDF417) symbol is optional. UIIs shall be shown as part of the identification marking. For set or assembly UII marking for component parts of disassembled items, see 5.2.14.1. For large data requirements, when the bar code reaches its full capacity, the packing list will be used for the overflow of data. If more than five UIIs are required on an exterior container, two UII lists shall be provided. The first list is to be placed inside the container and shall contain the concatenated UIIs of the uniquely identified items using a 2D (PDF417) symbol. Encoding of the second UII list, which shall be included with the packing list, is optional, but recommended. The words “UII LIST INSIDE” shall be marked on the identification-marked side of the container. Serial number lists and UII lists may be combined.

Source: https://assist.dla.mil -- Downloaded: 2016-12-01T07:08Z
Check the source to verify that this is the current version before use.

4.4.3.4 Boxes and crates under 10 cubic feet and those 10 cubic feet and over (see Figures 20 and 21). Regardless of size, the NSN/NATO stock number, contract or order number (if appropriate), CAGE code, CLIN (when used), contractor shipment number, concatenated UII(s), and assigned serial number(s) shall be encoded in machine readable symbology using the required data carrier(s) (linear (Code 39) or 2D (PDF417)) and applied to the identification- marked side of all boxes and crates used as exterior shipping containers. The linear (Code 39) bar codes shall be located above, to the right of or below the identification markings and shall be in a horizontal (picket fence) configuration. The 2D (PDF417) symbol will be located in close proximity to the identification markings.

a. For boxes and crates 10 cubic feet and over, identification bar code markings should also be placed on one end of the container.

b. The identification bar code shall be applied at least 2.0 inches (50.8 mm) from the top and bottom edges and at least 1.0 inch (25.4 mm) from the side edges of the box or crate. A quiet zone of at least 0.25 inch (6.35 mm) from the ends of the bar code to the nearest identification marking shall be maintained. When identification bar codes are located above or below identification markings, a separation of at least 0.125 inches (3.18 mm) shall be maintained between the markings and the symbol. If cleats, strapping, or other required markings may interfere with the placement of identification bar code markings, the identification bar code markings shall be placed as near as practicable to the prescribed data.

4.4.3.5 Bales, cloth-covered bundles, paper shipping sacks, bags and textile/laminated textile bags, rods, shafts, pipes, and coils of wire (see Figure 23). Identification bar code markings shall be placed either on the container surface or on identification tags, using the required data carrier(s) (linear (Code 39) or 2D (PDF417)). When tags are used for these items, the tags shall be secured as shown. Linear (Code 39) bar code formats shall be as described in 4.4.3.2. Identification bar code markings on coils of wire shall be applied to either side of both identification tags.

Source: https://assist.dla.mil -- Downloaded: 2016-12-01T07:08Z
Check the source to verify that this is the current version before use.

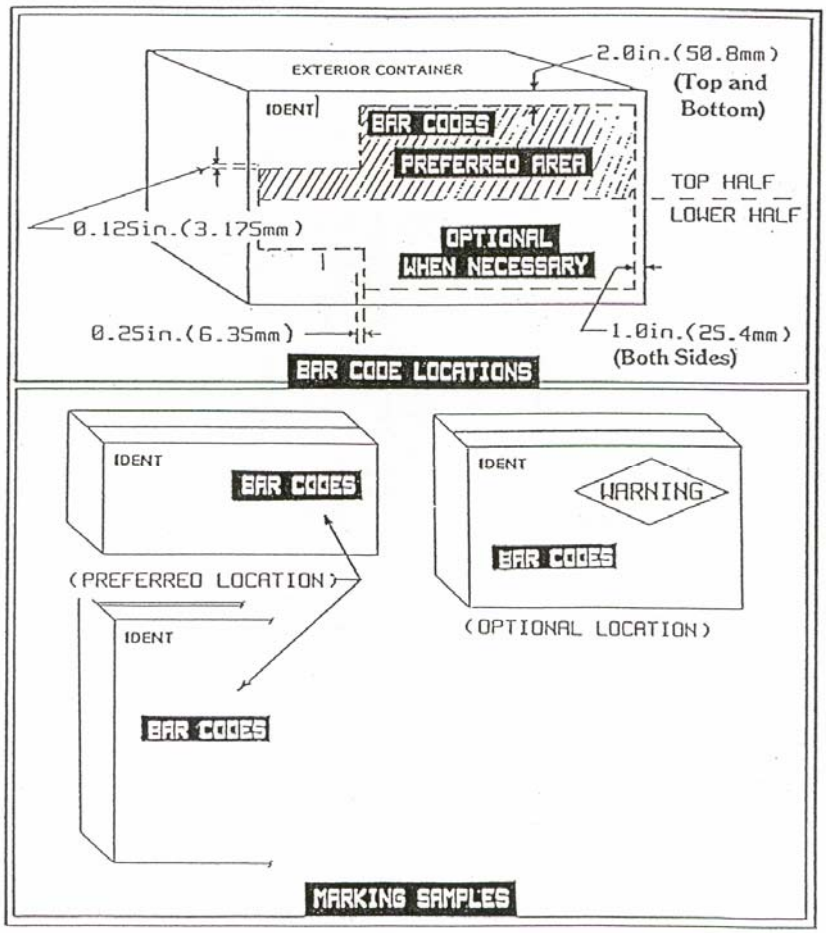

FIGURE 20. Exterior container bar code markings on boxes and crates under 10 cubic feet.

4.4.3.6 Barrels, drums, and other cylindrical containers (see Figure 24). Identification linear (Code 39) bar code markings shall be applied adjacent to the identification markings on the upper one-third of containers that are greater than 5 gallons. Identification linear (Code 39) bar code markings shall be applied immediately to the right of or below identification markings on containers 5 gallons or less and shall be at least 1.0 inch (25.4 mm) from the bottom and top edges of the container. Stacked formats shall be left-justified. On cylindrical containers less than 5 inches (127.0 mm) in diameter, identification linear (Code 39) bar code labels or markings shall be applied so that the bar codes are vertical or in a ladder “configuration”. When the bar code is placed in this configuration, the bars are placed 0.25 inch to 0.5 inch (6.35 mm to 12.70 mm) from the left edge of the identification markings. Identification bar code markings shall not be placed on the tear strip or container seam. The 2D (PDF417) bar code will be applied in close proximity to the identification markings.

Source: https://assist.dla.mil -- Downloaded: 2016-12-01T07:08Z
Check the source to verify that this is the current version before use.

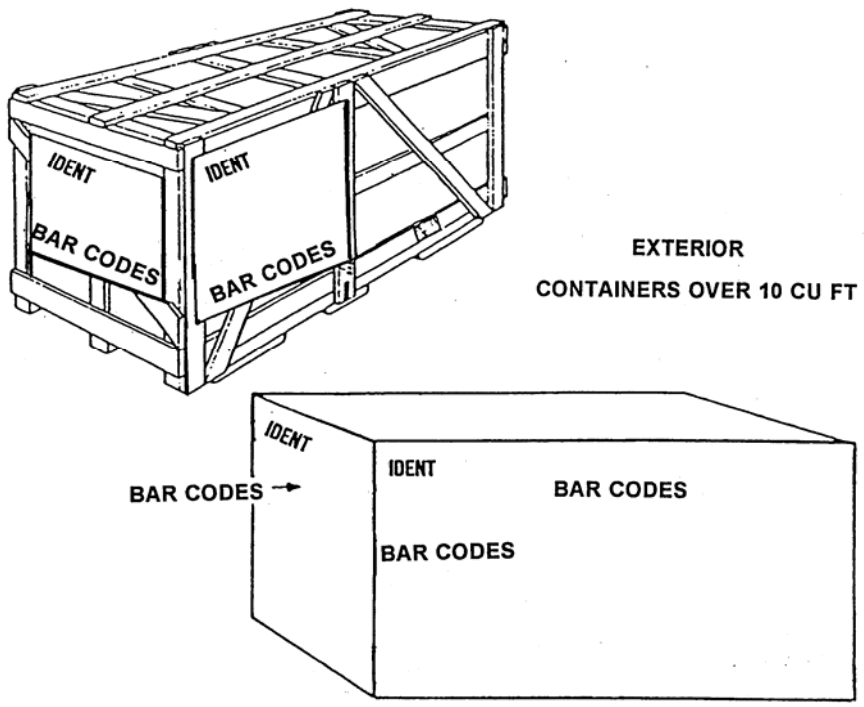

FIGURE 21. Exterior container bar code markings on boxes and crates 10 cubic feet and over.

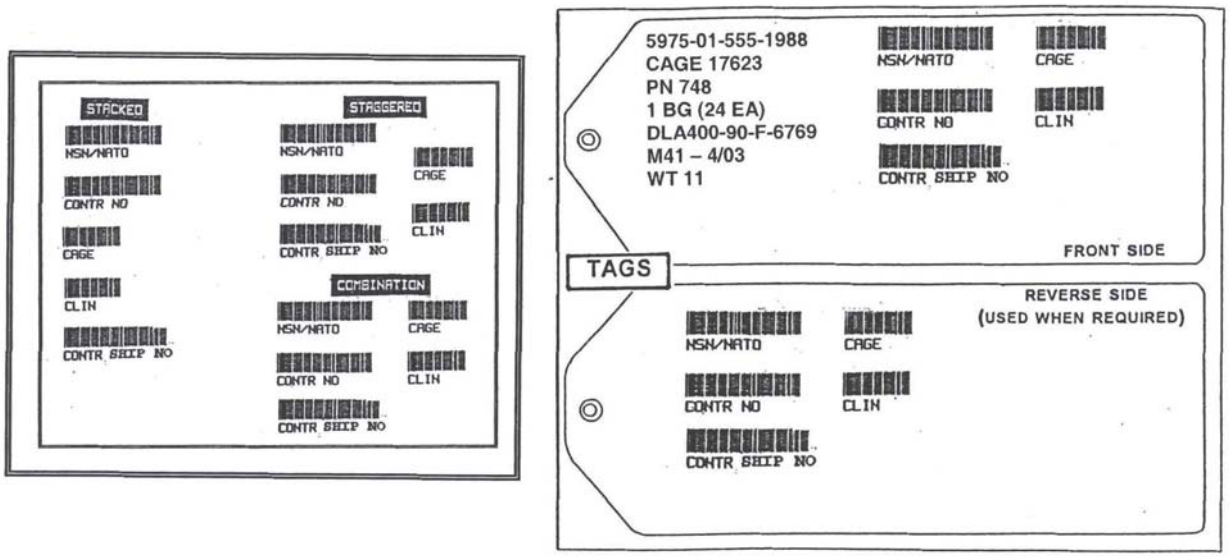

FIGURE 22. Typical linear (Code 39) bar code formats for use on exterior containers and on tags.

Source: https://assist.dla.mil -- Downloaded: 2016-12-01T07:08Z
Check the source to verify that this is the current version before use.

4.4.3.6.1 Markings on the tops of barrels, drums, and other cylindrical containers (see Figure 24). When identification markings are applied to the tops of empty or filled shipping containers such as barrels and drums, the identification bar code markings shall be applied beneath the identification markings. This is in addition to the bar code markings using the required data carrier(s) (linear (Code 39) or 2D (PDF417)), in 4.4.3.6. When marking reusable containers, all identification bar code markings that were applied for previous shipments or for storage shall be obliterated prior to application of current identification bar code markings.

4.4.3.7 Reels or spools of cable, wire, and rope (see Figure 25). Identification linear (Code 39) bar code markings shall be applied adjacent to or beneath the identification markings. The 2D (PDF417) bar code, when used, will be placed in close proximity to the identification markings. On other than wood reels or spools, the surface shall be prepared and the labels applied in accordance with 4.4.1.7.

4.4.3.8 Paper- and cloth-wrapped rolls (see Figure 25). Identification linear (Code 39) bar code markings shall be applied to the right or below the identification markings. The 2D (PDF417) bar code, when used, will be placed in close proximity to the identification markings.

4.4.3.9 Palletized unit loads (see Figure 25). The bar code markings shall be applied to the outside of the load immediately to the right of or below the identification markings on a marking board/panel or on the identification-marked side(s) of the load, as appropriate (see 4.3.2.7). If the individual containers that comprise the load are bar coded and scannable, no additional bar code markings are required. The 2D (PDF417) bar code, when used, will be placed in close proximity to the identification markings.

Source: https://assist.dla.mil -- Downloaded: 2016-12-01T07:08Z
Check the source to verify that this is the current version before use.

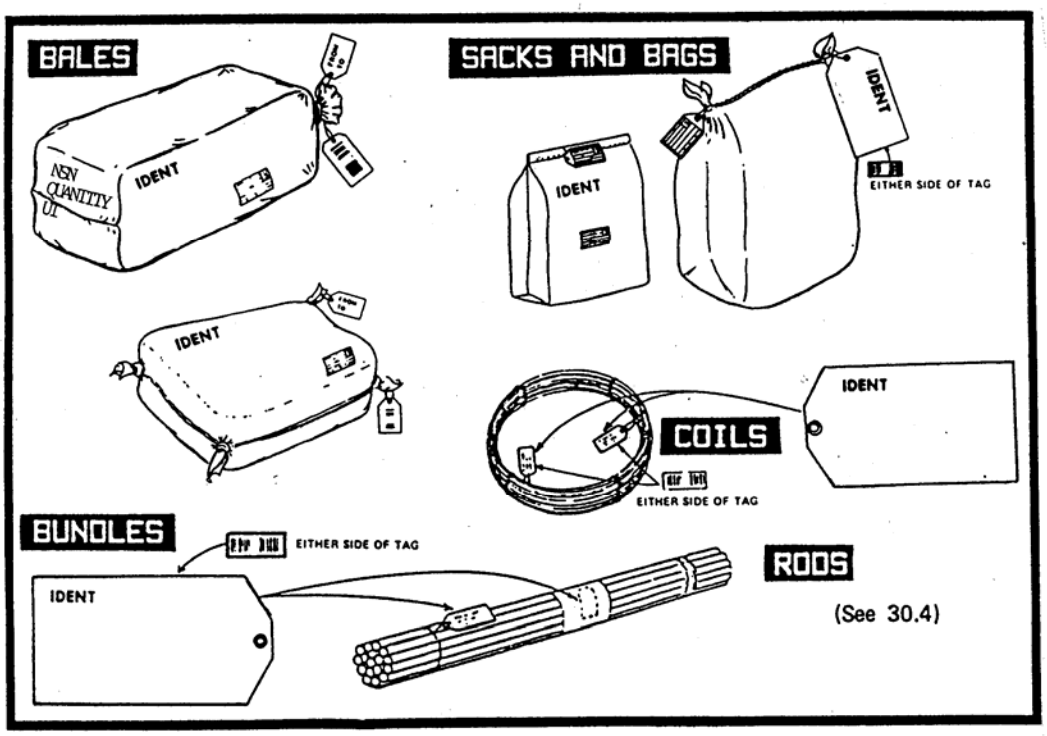

FIGURE 23. Bar code tagged materiel.

Source: https://assist.dla.mil -- Downloaded: 2016-12-01T07:08Z
Check the source to verify that this is the current version before use.

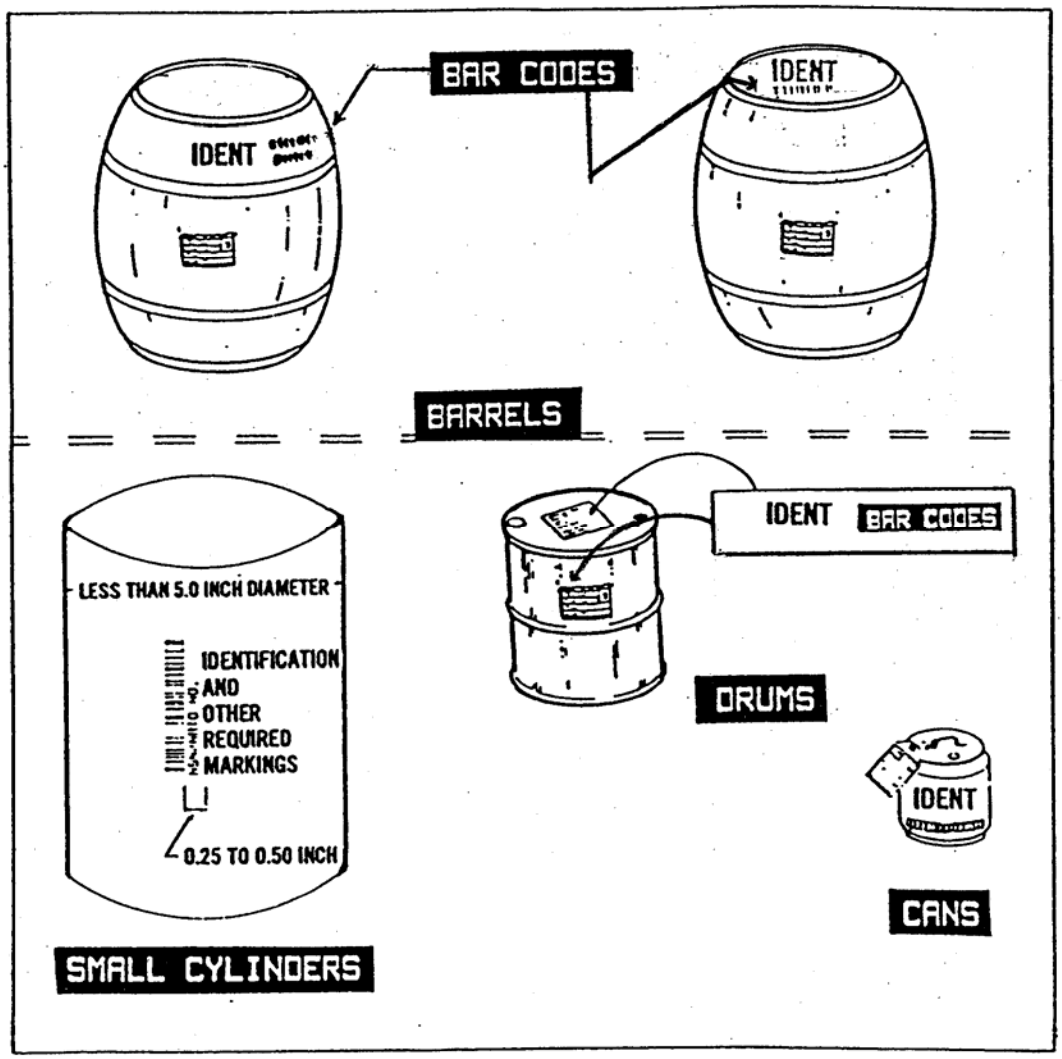

FIGURE 24. Bar code markings on cylindrical containers.

4.4.3.10 Unpacked major equipment (skidded or unskidded). Identification linear (Code 39) bar code markings shall be applied immediately to the right of the identification markings. If a marking board/panel is used, the linear (Code 39) identification bar codes shall be applied as specified in 4.4.3.4. The 2D (PDF417) bar code, when used, will be placed in close proximity to the identification markings.

Source: https://assist.dla.mil -- Downloaded: 2016-12-01T07:08Z
Check the source to verify that this is the current version before use.

4.4.3.11 Multipacks. Multipacks shall be bar coded as follows:

a. NSN/NATO stock number. None. However, unit packs and intermediate containers that comprise the multipack shall have identification bar code markings applied as described in 4.4.2.

b. Contract number. The contract number shall be bar coded on the exterior of the multipack if the number applies to all unit packs and intermediate containers inside the multipack. If mixed contract numbers are contained in the multipack, then the contract number shall not be marked.

c. CAGE and CLIN – None.

d. Contractor Shipment Number – None.

e. Concatenated UII(s) and Serial Number(s) – None.

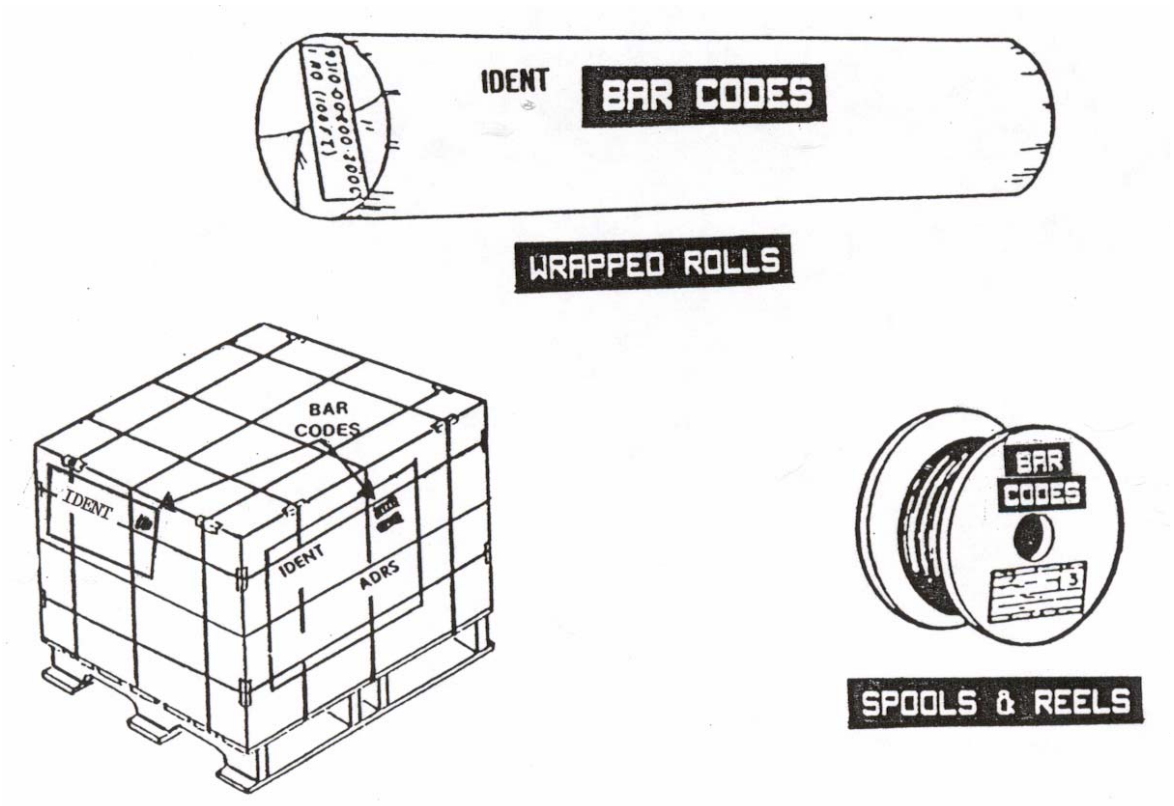

FIGURE 25. Bar code markings on miscellaneous materiel.

Source: https://assist.dla.mil -- Downloaded: 2016-12-01T07:08Z
Check the source to verify that this is the current version before use.

4.4.3.12 Sets, kits, and outfits (SKO). Identification bar code markings shall be applied to all SKOs, whether the SKOs were obtained through procurement or were assembled at a DoD activity. When a multiple container SKO is comprised of other SKOs, all containers shall be marked with identification bar codes that identify only the final (end item) SKO. When the SKO is obtained through procurement, the NSN and contract number of the complete SKO shall be encoded. When an SKO is assembled at a DoD activity, only the NSN shall be encoded. All containers of a multiple container shipment shall be marked as specified in 5.2.14.

4.4.3.13 Materiel destined for resale. Unit packs and intermediate containers of materiel destined for resale that normally have a Universal Product Code (UPC) symbol need not be remarked with linear (Code 39) and 2D (PDF417) bar codes.

4.4.3.14 Protected cargo (controlled, sensitive, classified, and pilferable items). Unless otherwise specified in the contract or solicitation, purchase order, or shipping document, the item description (nomenclature) shall be omitted from all shipping containers of protected cargo. Identification bar code markings are required. If the NSN is included as part of the identification markings, the linear (Code 39) bar code HRI shall be shown. However, if the NSN is omitted, the HRI shall also be omitted. For shipments of DSCP C&T items, the HRI shall remain. For shipments of DSCP medical items, the item description (nomenclature) and the NSN, including the HRI, shall be omitted; in lieu of these markings, the term “MEDICAL SUPPLIES” shall be used. The only exception is for medical material classified as both protected cargo and hazardous material; for these items, hazardous marking requirements shall take precedence.

4.4.3.15 Bundled wood products. Identification bar code markings for bundled wood products shall be applied on a marking board or panel as specified in 4.4.3.4.

4.4.3.16 Small arms weapons container labels (see Figure 15). Bar code label requirements for small arms weapons containers shall be as follows:

a. Identification bar code labels used on other than wood and wood containers shall comply with the requirements specified in 4.4.1.7 and 4.4.1.8, respectively.

b. Deleted.

c. Identification bar code labels on unit, intermediate and exterior containers shall comply with requirements specified in 4.4.1.9 and 4.4.1.10, respectively. The style shall be specified in the contract or purchase order.

Source: https://assist.dla.mil -- Downloaded: 2016-12-01T07:08Z
Check the source to verify that this is the current version before use.

4.5 Direct vendor delivery (DVD). Unless otherwise specified in the contract or solicitation, contractor- or vendor-originated DVD shipments require identification and address marking with 2D (PDF417) and linear (Code 39) bar codes in accordance with this standard. The issue/receipt bar code markings shall either be placed on or printed on labels affixed to either the DD Form 250/250c or the commercial packing list. If placed on the DD Form 250/250c, they should be in blocks 15, 16, 17, etc. In either case, these documents shall be furnished in a packing list envelope affixed to the outside of the shipping container. The following separate lines of issue/receipt bar code data, with HRI printed directly below the linear (Code 39) bar code in accordance with ISO/IEC 16388, shall be provided as three bar codes containing data as described in DoD 4000.25-1-M, Appendix 2:

a. Bar code: Document number and suffix (if applicable) for a maximum (15) characters. It may be referred to in a contract/order as the requisition number.

b. Bar code: Thirteen digit National Stock Number (NSN) and two additional (Add) codes as applicable. In the absence of the NSN and Add code, the CAGE and Part Number will be used for a maximum of 15 characters.

c. Bar code: Three character inventory control point routing identifier code (RIC), two character unit of issue (UI), five digit zero filled quantity (QTY), one character condition code (COND), blank or last two characters of the distribution code (DIST), and a seven digit zero filled Unit Price (UP) showing dollars and cents with no decimal. The bar code will have a fixed length of 20 characters to include leading zeros and blanks.

4.6 Foreign Military Sales (FMS) marking requirements. Identification and address markings for unit packs, intermediate and exterior containers, and for unpacked items shall be applied as specified in 4.1.1, 4.1.2, 4.2, and 4.4.3. Identification bar code container markings for FMS shipments are required unless otherwise specified in the contract or purchase order. Bar coding of the MSL for FMS materiel shipments is required. In addition, the following special requirements shall apply to FMS shipments.

4.6.1 Minimum package size. The minimum size box used for FMS shipments shall have enough surface area on the top and two sides to affix all required labels, packing lists, DD Forms 250 (Material Inspection and Receiving Report), DD Forms 1348-1A, and any other required markings without overstamping or overlapping. Identification bar codes shall be legible and readable. Nothing shall be placed or appear on the ends or bottom of the box, package, or container. A packing list is required.

4.6.2 Multipacks. All boxes containing multiple items (related or unrelated) shall be marked as multipacks as specified in 4.1.2.1.2.

Source: https://assist.dla.mil -- Downloaded: 2016-12-01T07:08Z
Check the source to verify that this is the current version before use.

4.6.3 Contractor-originated FMS shipments. The DD Form 250 shall be used as a packing list for contractor-originated FMS shipments in lieu of the DD Form 1348-1A, which may be used for FMS shipments originated by DoD activities. The DD Form 250 shall be prepared as specified in the Defense Federal Acquisition Regulation Supplement (DFARS), Appendix F, Part 3, F301, Preparation Instructions. Distribution of the DD Form 250 shall be made in accordance with the DFARS, Appendix F, Part 4, and any other specific information contained in the contract or purchase order. For additional information on the DD Form 250, see 5.3.1.2.

4.6.4 DoD originated FMS shipments. Distribution of the DD Form 1348-1A for FMS shipments shall be accomplished as shown in Figure 26 as authorized by chapters 5 and 6 of DoD 4000.25-1-M, which also authorizes reprinting of additional copies of the DD Form 1348-1A. One copy of the DD Form 1348-1A will be retained by the shipper. One copy of the form shall be placed inside the container and one copy of the same form shall be affixed to the exterior of the container for each item that is inside the container. One copy will be the original. Except for sensitive and/or classified items, there are no exceptions to this requirement. One copy of the DD Form 1348-1A shall be forwarded (annotated with either the Government Bill of Lading or the Commercial Bill of Lading number) to the address of the appropriate freight forwarder indicated by the Type of Address Code (TAC) obtained from the Military Assistance Program Address Directory (MAPAD). Additional copies of the DD Form 1348-1A may be needed for the notice of availability (NOA). Automated Packing Lists (APLs) are optional and, when used, they are in addition to the DD Form 1348-1A.

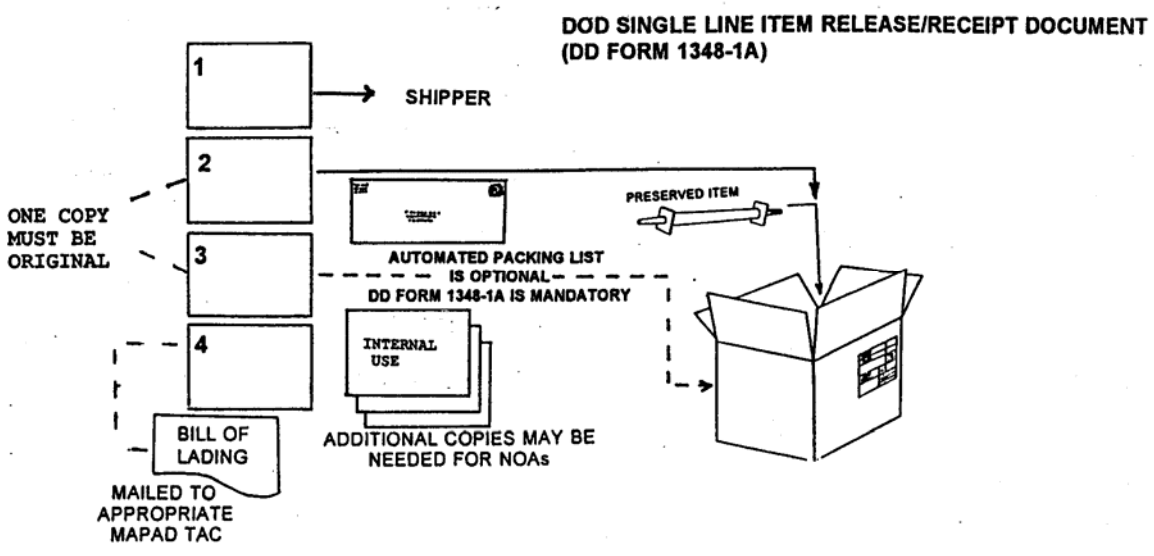

FIGURE 26. Distribution of the DD Form 1348-1A for FMS shipments.

Source: https://assist.dla.mil -- Downloaded: 2016-12-01T07:08Z
Check the source to verify that this is the current version before use.

4.7 Shipments to North Atlantic Treaty Organization (NATO) countries or shipments using NATO carriers. Shipments to NATO country installations/forces (other than US managed/operated) shall be marked as specified herein and in standardization agreement (STANAG) 4281 for the marking and STANAG 4329 for the bar coding of military cargo.

4.8 Marking for specific commodities.

4.8.1 Household goods. Household goods shall be marked in accordance with DoD 4500.9-R, Part IV.

4.8.2 Medical material. Medical material shall be marked for shipment and storage as specified in the latest edition of Medical Marking Standard No. 1.

4.8.3 Subsistence. DLA designated subsistence materials will be marked in accordance with DSCP Form 3556 (Subsistence).

4.8.4 Bulk cargo. Where transportation conveyance is the only external container, such as for liquids, ore, or grains, the shipment will be documented in accordance with the contract.

4.8.5 Petroleum products. Petroleum products shall be marked for shipment and storage as specified in MIL-STD-290.

4.9 Passive Radio Frequency Identification (RFID). Passive RFID will be used within DoD and by contractors/vendors in accordance with the Supplier Implementation Plan and the DoD Suppliers' Passive RFID Information Guide at http://www.acq.osd.mil/log/rfid/index.htm.

4.9.1 Passive RFID tag technical requirements. Unless otherwise specified in the contract or solicitation, DoD and contractors/vendors shipping or delivering to the DoD will use passive RFID tags that comply with the EPCglobal Generation 2, Class 1 RFID tag specifications.

a. Passive RFID tags shall be applied to case shipments and palletized unit load shipments. Shippers are referred to the Supplier Implementation Plan located at http://www.acq.osd.mil/log/rfid/index.htm for detailed information.

b. Bulk commodities shall not be tagged in accordance with passive RFID tagging requirements. Bulk commodities are products carried or shipped in rail tank cars; tanker trucks; other bulk, wheeled conveyances; or pipelines. Examples of bulk commodities are: sand, gravel, bulk liquids (water, chemicals, or petroleum), ready-mix concrete or similar construction materials, coal or combustibles such as firewood, and agricultural products (seeds, grains, animal feeds and the like).

4.9.1.1 Passive RFID tag/interrogator readability requirements. Deleted.

Source: https://assist.dla.mil -- Downloaded: 2016-12-01T07:08Z
Check the source to verify that this is the current version before use.

4.9.1.2 Passive RFID tag data specifications. DoD tag data specifications and passive RFID tag formats for data constructs are located in the DoD Suppliers' Passive RFID Information Guide located at http://www.acq.osd.mil/log/rfid/index.htm.

4.9.1.3 Passive RFID tag frequency. The DoD approved frequency range for passive RFID tags is 860-960 MHz.

4.9.2 Passive RFID tag placement. The passive RFID tag may be integrated with the military or commercial shipping label (RFID-enabled address label) or they may be placed in separate locations on the shipment. This standard identifies recommended locations for the RFID-enabled address label and passive RFID tag placement. See 4.9.3 for ammunition applications.

4.9.2.1 Individual shipping container or palletized unit load. RFID-enabled address labels and/or passive RFID tags should be affixed at a suitable location where there is a minimum risk of damage, easy access to the respective bar code symbols, and the highest potential for successful passive RFID tag interrogation.

a. RFID-enabled address labels shall be applied to shipping containers or palletized unit loads per 4.3.2, including applicable sub-paragraphs.

   (1) The RFID-enabled label should not be placed over a seam nor should sealing tape or bands be placed over the label in a manner that interferes with the scanning of the label bar codes or reading the transponder data.

   (2) The RFID-enabled label should not be placed in a manner that overlaps any other existing RF transponder. There should be at least a 10 cm (4 in) separation.

   (3) The RFID-enabled label for a palletized unit load should not be attached to an exterior container if the cargo within the exterior container will not be removed for receipt processing and storage. To preclude inventory and receipt issues, the RFID tag attached to an exterior container must be linked to the contents of that specific container and not be linked to the contents of an entire palletized unit load.

b. If RFID-enabled address labels are not used, then attach a separate passive RFID tag and a separate address label(s).

   (1) Address labels should be affixed in accordance with the provisions of 4.3.2, including applicable sub-paragraphs.

Source: https://assist.dla.mil -- Downloaded: 2016-12-01T07:08Z
Check the source to verify that this is the current version before use.

(2) Parcel carriers may require the placement of commercial address label carrier information on the top of a shipping container in addition to customer and supplier information that would continue to be placed on address labels in accordance with the provisions of 4.3.2. Shippers are referred to MHIA MH10.8.1 for guidance concerning address label formats and locations for carrier, customer, and supplier information.

(3) The passive RFID tag should be placed on the identification marked side within the same boundary locations as noted for the address labels on shipping containers or palletized unit loads as per 4.3.2, including applicable sub-paragraphs.

(4) A passive RFID tag should not be placed in a manner that overlaps any other existing Radio Frequency (RF) transponder. There should be at least a 10 cm (4 in) separation.

(5) The passive RFID tag for a palletized unit load should not be attached to an exterior container if the cargo within the exterior container will not be removed for receipt processing and storage.

4.9.2.2 Unit, intermediate and exterior containers within a palletized unit load. These containers will not usually be marked with an address label and therefore require only that the passive RFID tag be affixed at a suitable location where there is a minimum risk of damage and the highest potential for successful passive RFID tag interrogation (see 4.9.2.1b).

4.9.3 Tagging munitions/explosives with passive RFID. Munitions and explosives shall not be tagged until the following certification requirements are met for the passive RFID tag, tag reader and antenna configuration: electromagnetic effects on the environment (E3), Hazards of Electromagnetic Radiation to Ordnance (HERO), Hazards of Electromagnetic Radiation to Fuel (HERF), and Hazards of Electromagnetic Radiation to Personnel (HERP). For additional information, refer to the Product Manager Automatic Identification Technology website at http://www.eis.army.mil.

4.9.4 Electronic data interchange (EDI) transactions. Advance Shipment Notice (ASN) transactions (EDI 856), Shipment Status transactions (EDI IC 856S), or Consolidated Shipment Notice transactions (EDI IC 856A) will be used to link the passive RFID tag to the content level detail information associated with each of the container types in accordance with DFARS 252.211-7006 (also see http://www.acq.osd.mil/log/rfid/advance_shipment_ntc.htm) guidance. Consignors will transmit these EDI transactions to consignees in advance of shipment.

Source: https://assist.dla.mil -- Downloaded: 2016-12-01T07:08Z
Check the source to verify that this is the current version before use.

5. DETAILED REQUIREMENTS

5.1 Markings, marking materials and methods.

5.1.1 Marking materials. Marking materials used shall be those materials specified in this standard or alternate choices approved by the cognizant activity. Contractors may obtain the DoD-unique labels discussed herein from commercial sources after obtaining samples from either the procuring activity or the local Defense Contract Management Agency (DCMA) office.

5.1.1.1 Waterproofing materials used as protective coatings. Waterproofing materials such as spar varnish, acrylic coating compound, sealing compound, label adhesive, polyurethane coatings, and pressure-sensitive tape, that does not restrict or preclude legibility or readability of the package markings, shall be used as protective coatings on container markings.

5.1.1.2 Stencil-marking material. Any opaque, nonfading, fast drying, weather resistant stencil ink, lacquer, paint, or enamel shall be used for stencil marking. MIL-DTL-64159, MIL-C-46168 or MIL-C-53039 paint shall be used for stenciling containers that have a chemical agent resistant coating (CARC) applied to them.

5.1.1.3 Obliterating lacquer, enamel, or paint. Any quick- drying, opaque lacquer, ink, enamel, or paint that approximates the color of the container shall be used for the obliteration of markings. When obliterating CARC painted markings on metal reusable containers, paint conforming to MIL-DTL-64159, MIL-C-46168 or MIL-C-53039, paint chip color Green-383 or Tan-686 of FED-STD-595, shall be used. Green shall be used on green or green camouflage and tan shall be used on tan or desert sand camouflage colored containers.

5.1.1.4 Lithographing, embossing, roller coating, stamping, and inkjet marking. When lithographing, embossing, or roller coating of markings is authorized, commercial enamels, lacquers, or inks in the color specified shall be used. When stamping or inkjet marking is specified, commercial waterproof and petroleum-resistant inks, in the color specified, must maintain sufficient durability during exposure to field service.

5.1.2 Labels, paper, pressure-sensitive, water-resistant. Labels shall be of a water-resistant grade of paper, film, fabric, or plastic, coated on one side with water-insoluble, permanent type adhesive. The adhesive shall adhere to metal, plastic, aluminum or fiberboard surfaces under high and low temperatures. Labels shall have a finish suitable for printing and writing on with ink without feathering or spreading, be capable of withstanding normal handling and storage conditions, and remain securely in position. Application specific performance criteria and durability requirements to ensure functionality in various climatic environments should be tailored, if required, using MIL-PRF-61002. MIL-PRF-61002 can be used as an acquisition tool when labels presently being used are not performing satisfactorily or when new conditions or applications require special label stock for those particular situations. Identification bar code labels on exterior containers shall meet the requirements of paragraph 4.4.1.10.

Source: https://assist.dla.mil -- Downloaded: 2016-12-01T07:08Z
Check the source to verify that this is the current version before use.

5.1.2.1 Use of labels. Pressure-sensitive labels that meet the requirements of 5.1.2 may be used on containers other than wood without prior surface preparation. When pressure-sensitive labels are used on wood containers, the labeling area will be suitably prepared to ensure adhesion.

5.1.2.2. Protective coating of labels. If labels for exterior containers, except vehicles and related items, are not inherently waterproof, they shall be waterproofed by coating the entire outer surface of the label with a transparent, waterproofing material (see 5.1.1.1). Exterior identification bar code labels shall be protected in accordance with paragraph 4.4.1.10.

5.1.2.3 Affixing and securing paper labels (except for labels on vehicles and related equipment). Paper labels that are other than pressure-sensitive shall be securely affixed with a water-resistant label adhesive or a transparent, waterproof, pressure-sensitive tape.

5.1.3 Tags. Shipping tags are recommended for use when it is impractical to stencil mark or apply a label on the container or unpacked item. Shipping tags of metal, cloth, plastic, paper, or other durable material shall be used to provide the required markings when specified herein or when it is impractical to stencil mark or apply a label on a container or unpacked item. Separate tags shall be used for identification and address markings.

5.1.4 Water-resistant envelopes. Water-resistant envelopes shall be used for packing lists and materiel release/receipt documents, etc. Securely affix or fasten the envelope to the package or container. Water-resistant envelopes are recommended for containing packing lists and other documents.

5.1.5 Conditions of surfaces to be marked. All surfaces to be marked shall be in a condition so that markings remain permanent, legible, and nonfading. All marks not applicable to the shipment shall be obliterated. When shipping containers are consolidated into container vans for shipment to an ultimate consignee, obliteration of current address markings is not required.

5.1.6 Legibility, durability and color of markings. Markings shall be clear, legible, durable, and nonfading and sufficient to withstand normal exposure to environmental and handling conditions which the package/container might be subjected. Bar code print quality shall conform to 5.1.10. Unless instructed otherwise in the contract, purchase order, or drawing, packages constructed of wood or lightly colored materials shall be marked using a black color and packages constructed from green or black materials shall be marked using a white or yellow color.

5.1.7 Methods of marking unit packs, intermediate and exterior containers, and loose or unpacked items. Markings shall be accomplished by any means that provides the required degree of legibility and durability. Markings may be applied by tagging, stenciling, stamping, machine printing or labeling (using preprinted labels). Although machine printing is preferred, hand printing may be used for marking packs and containers if permitted by the cognizant activity. Hand printing is not authorized for ammunition containers.

Source: https://assist.dla.mil -- Downloaded: 2016-12-01T07:08Z
Check the source to verify that this is the current version before use.

5.1.8 Marking board or marking panel. Markings shall be applied to marking boards and marking panels as specified herein or in the contract or purchase order.

5.1.9 Size of markings. Unless otherwise specified herein or by the cognizant activity, the lettering/markings shall be in capital letters of equal height, clearly visible, and the largest size practical for the package size within the acceptable range. When marking space permits, stenciled or pre-printed markings shall be not less than 3/32 of an inch.

5.1.10 Identification bar code machine-readable markings. Identification linear (Code 39) bar code markings shall be applied by means of a label or by direct printing on the packaging material, upon authorization by the cognizant activity. Labels are required for 2D (PDF417) symbols.

5.1.10.1 Linear (Code 39) bar code symbology. The application of linear (Code 39) symbols will be in accordance with ISO/IEC 16388. Print quality, element width, and wide to narrow ratios will comply with ISO/IEC 15416 and MHIA MH10.8.1. The standard linear (Code 39) bar code density range should be from 3.0 to 9.4 characters per inch (CPI). When a direct-marking process is used to bar code exterior shipping containers, a bar code character density range of 1.7 to 3.0 CPI may be used. Higher bar code densities in the range of 9.4 to 15.5 CPI may be used, when specified, for unique applications.

5.1.10.2 Two-dimensional (2D) (PDF417) symbols. 2D (PDF417) symbols will be encoded in accordance with MHIA MH10.8.2 and ISO/IEC 15434. Print quality will comply with ISO/IEC 15438 and MHIA MH10.8.1. The symbol shall have a quiet zone of 1mm (0.04 in) above, below, to the left, and to the right. The quiet zone is included within the calculation of the size of the symbol (see Table IV for additional specification requirements).

5.2 Special markings. The special markings discussed in this standard are examples of the types of special markings that may be specified in a contract or purchase order. Every contract or solicitation must include all special marking requirements applicable to the contract. Unless otherwise specified, the special markings shall be placed in a conspicuous location on the identification-marked side of the applicable container or item.

5.2.1 Shelf-life markings (see Figure 28). Shelf-life markings shall be shown as part of the item identification data on unit packs, intermediate containers, exterior containers, and unpacked items. Shelf-life markings shall include the manufactured, cured, assembled or packed date (apply one date), and the expiration or inspect/test date, as appropriate. Shelf-life markings can be specified in solicitations or contracts, purchase orders, purchase descriptions, specifications and material standards. All shelf-life markings will be based on Shelf-Life Codes (SLC) (see Table II). In accordance with DoD 4140.27-M, there are two types of shelf-life items. Type I shelf-life items have a definite nonextendible period of shelf-life. They are assigned alpha shelf-life codes (SLCs) (excluding "X"). Type II shelf-life items have an assigned shelf-life time period that may be extended after completion of visual inspection, certified laboratory test, or restorative action.

Source: https://assist.dla.mil -- Downloaded: 2016-12-01T07:08Z
Check the source to verify that this is the current version before use.

Type II items are assigned numeric SLCs and "X". Items that are assigned a SLC of zero (non-deteriorative) do not require shelf-life markings. For definitions of the assembled date, cured date, expiration date, inspect/test date, manufactured date, and packed date, see 3.41.1 through 3.41.6, respectively.

a. For Type I shelf-life items: manufactured (MFD) date, cured date, assembled date, packed date (subsistence only) (apply one date, as appropriate), and expiration (EXP) date (see note). For items that contain rubber or synthetic elastomers, the expiration date shall be calculated from the cured date of the rubber/elastomer.

b. For Type II shelf-life items: manufactured date, cured date, assembled date, packed date (subsistence only) (apply one date, as appropriate), and inspect/test (INSP/TEST) date (see note). For items that contain rubber or synthetic elastomers, the inspect/test date shall be calculated from the cured date of the rubber/elastomer.

EXAMPLE 1 (TYPE I)	EXAMPLE 2 (TYPE II)	EXAMPLE 3 (TYPE II)
MFD DATE 10/91	ASSEMBLED DATE 10/92	CURED DATE 4Q92
EXP DATE 10/93	INSP/TEST DATE 10/93	INSP/TEST DATE 4Q93

NOTE: The words "TYPE I" or "TYPE II" shall not be applied as part of the shelf-life markings. For other than cure dated items (see examples 1 and 2), the manufactured date, assembled date, packed date, expiration date, and the inspect/test date shall be expressed by the numeric month followed by the last two digits of the calendar year, with the day of the month being the last day. For cure dated items, the cured date, expiration date, and the inspect/test date (see example 3) shall be expressed by the calendar quarter followed by the last two digits of the calendar year, with the day of the quarter being the last day. When two or more unit packs of items have different beginning and ending shelf-life dates, the earliest ending date, i.e. expiration or inspect/test shall be shown on the shipping container.

5.2.1.1 DD Form 2477 Series (Extended Shelf-Life Notice) (see Figure 27). Prior to shipment, Type II shelf-life materiel that has been extended to a new inspect/test date, shall have a DD Form 2477 applied as specified in DoD 4140.27-M.

Source: https://assist.dla.mil -- Downloaded: 2016-12-01T07:08Z
Check the source to verify that this is the current version before use.

SHELF- LIFE EXTENSION NOTICE

PER DOD 4140.27- M, CONTAINERS REQUIRE RE- MARKING WITH EXTENDED SHELF- LIFE DATA.

UNITS OF ISSUE REQUIRE RE- MARKING UPON OPENING CONTAINER.

NSN: _____

CONTRACT NUMBER: _____

LOT/ BATCH NUMBER: _____

DATE TESTED: _____

NEXT INSP/ TEST DATE: _____

AUTHORITY: _____
(QSL, MQCSS, OTHER)

INSPECTED BY: _____
(ACTIVITY AND INSPECTOR'S NAME OR NUMBER)

DD FORM 2477-1 (Large), -2 (Medium), or -3 (Small) APR 1999
PREVIOUS EDITION MAY BE USED.

FIGURE 27. DD Form 2477, Extended Shelf-Life Notice.

5.2.2 Project code markings (see Figure 28). When a project code has been assigned or is specified in a solicitation or contract, project code labels shall be applied to exterior containers. The project code shown in the solicitation, contract or purchase order (e.g., ARI, ABC, etc.), shall appear in the address and also on a white label having a disc of a highly contrasting color superimposed on it. If more than one project is required, all project codes may be put on one label. Label sizes shall be 3 by 3 inches with a 2-inch diameter disc or 9 by 9 inches with a 6-inch diameter disc, with both having proportionate contrasting lettering. The project code may also be applied directly on a container. When markings are applied by tags, the project code shall be placed on the identification tag adjacent to the identification markings. The project code markings shall be applied as follows:

Source: https://assist.dla.mil -- Downloaded: 2016-12-01T07:08Z
Check the source to verify that this is the current version before use.

a. Rectangular containers, consolidation containers, and palletized loads - two discs, one on the identification side and one on the opposite side (in addition to the container discs).

b. Cylindrical containers - two discs equally spaced on the circumference.

c. Irregularly shaped containers and loose or unpacked items - stenciled or printed on the identification-marked side of a tag.

d. Vehicles or other major unpacked items - one disc on the marking board, or one disc applied directly on a vehicle by a waterproof, pressure-sensitive tape such as ASTM D 5486. The tape shall be placed over the label and extend a minimum half inch from all edges of the label.

e. Postal – one disc adjacent to the address marking.

f. MILVANs/SEAVANs - not marked. However, containers or items comprising the load shall be marked.

5.2.3 Transportation special handling/protective services (see Figure 28). Non-hazardous shipments moving by military controlled aircraft (including military contract airlift) requiring special handling/protective services shall have a DD Form 1387-2 (Special Handling Data/Certification) label affixed to the exterior container. The form shall be prepared as specified in DoD 4500.9-R, Part II for non-hazardous, classified/protected materiel. It shall be placed on the same side of the container as the address marking. Non-hazardous materiel moving by military controlled aircraft such as items subject to damage by heat or freezing and life or death shipments also require a completed DD Form 1387-2.

5.2.4 Structural markings. When required, structural markings such as "REMOVE TOP FIRST" or "TO OPEN TOP: REMOVE SCREWS," shall be placed on shipping containers on or near the structure described. Containers designated as "reusable" shall include sufficient structural markings to provide instructions for opening and unpacking without causing damage to the container, packing materials, and the container's contents.

5.2.5 Valuable and security items. When items such as certain drugs, narcotics, precious metals, currency, jewelry, cameras, and similar type valuables are shipped, markings shall be as specified by the cognizant activity or as required by regulation or statute. When no marking requirements are specified, marking shall be as prescribed in 4.1.1 and 4.1.2. Alcohol or alcoholic beverages shall be documented and marked in accordance with U.S. Treasury Department regulations.

Source: https://assist.dla.mil -- Downloaded: 2016-12-01T07:08Z
Check the source to verify that this is the current version before use.

5.2.6 Special handling, including arrows and FRAGILE/DELICATE markings (see Figure 29). All containers will have appropriate caution markings applied. Special handling markings such as TOP, UP, THIS SIDE UP, GLASS, KEEP DRY, PERISHABLE, KEEP FROZEN, FRAGILE or DELICATE shall be placed on shipping containers, as applicable. These markings shall not interfere with or obscure other markings. Containers of fragile/delicate items shall be marked with a fragile label or by stenciling or stamping the word "FRAGILE" or "DELICATE" on the container. When space permits, "FRAGILE" or "DELICATE" markings shall be placed on the identification-marked side and one end of a rectangular container, and on two equally spaced areas on the circumference of a cylindrical container. Special handling illustrations are contained in ASTM D 5445.

5.2.6.1 Legend "USE NO HOOKS" (see Figure 29). The legend “USE NO HOOKS" in letters not less than 1½ inches in height shall be stenciled on both sides of shipping containers in which the contents are susceptible to damage by the use of hooks. In addition, a hook symbol with a superimposed "X" sufficiently heavy to convey the intended prohibitory use of the hooks shall be placed directly above the legend.

Source: https://assist.dla.mil -- Downloaded: 2016-12-01T07:08Z
Check the source to verify that this is the current version before use.

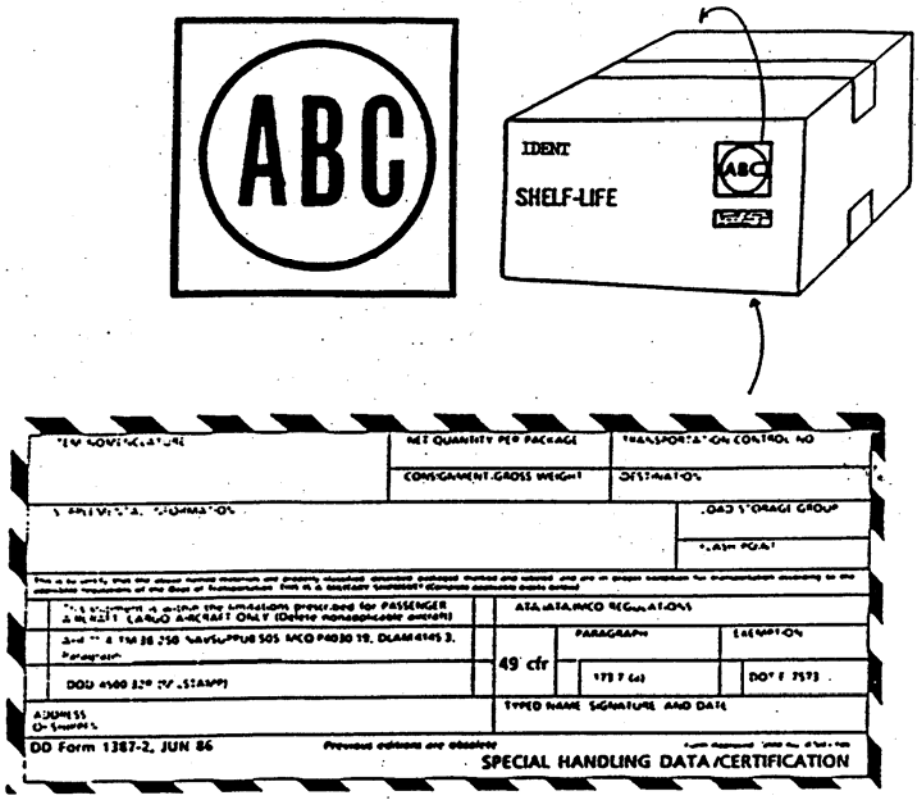

FIGURE 28. Examples of special markings (shelf-life, project code, and transportation special handling/protective services markings).

FIGURE 29. Examples of special markings (FRAGILE, UP, arrows, USE NO HOOKS and warranty markings).

Source: https://assist.dla.mil -- Downloaded: 2016-12-01T07:08Z
Check the source to verify that this is the current version before use.

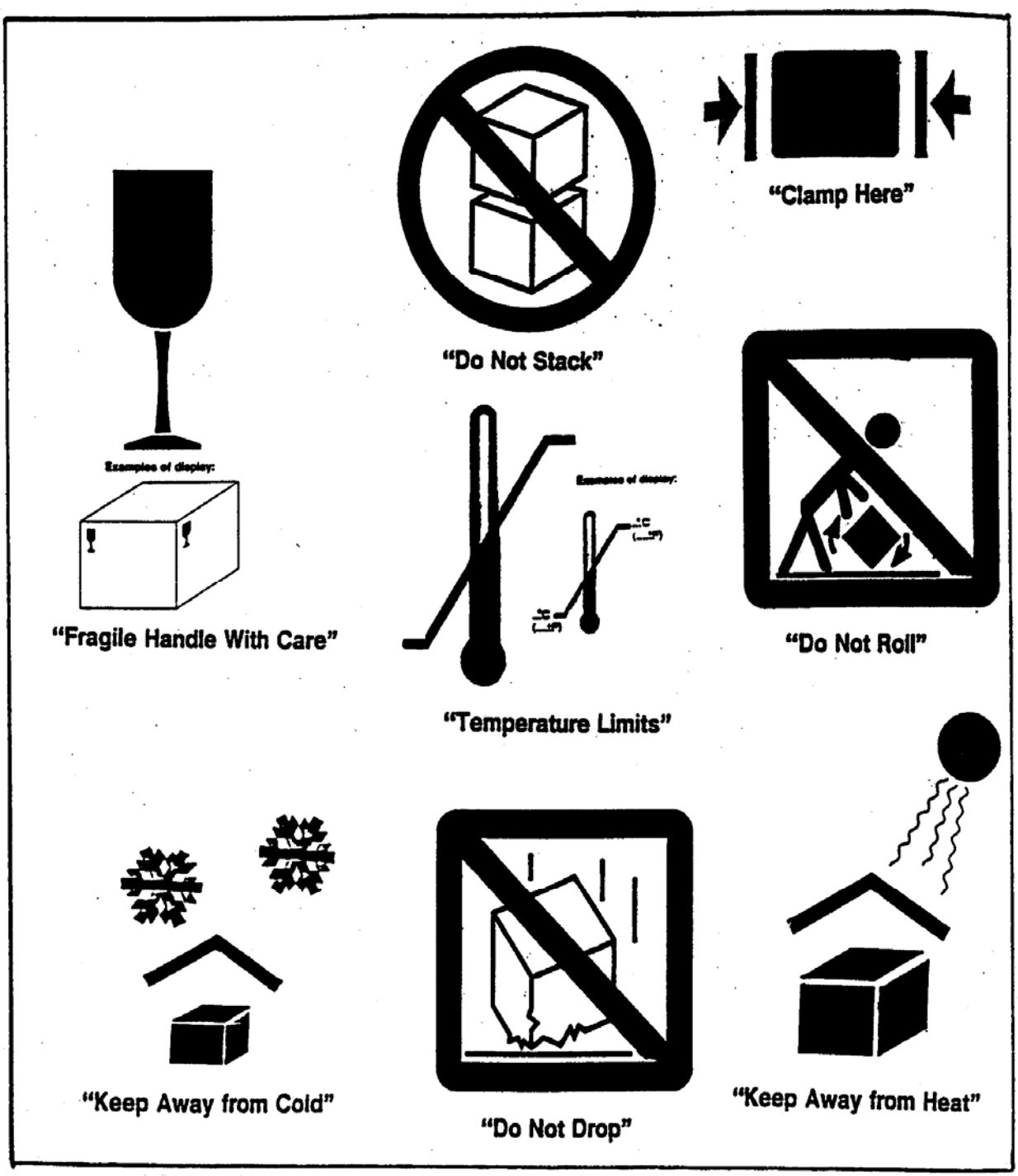

FIGURE 30. Examples of pictorial symbols.

Source: https://assist.dla.mil -- Downloaded: 2016-12-01T07:08Z
Check the source to verify that this is the current version before use.

5.2.6.2 Arrows (see Figure 29). When containers are required to be stacked or the top surface shall remain up, two sides of a rectangular container and two equidistant points on the circumference of a cylindrical container shall be marked or labeled "UP," with an arrow pointing toward the top of the container. The arrow shall be not less than 1 inch in length, and its overall size shall be proportionate to the available space. Arrows are to be used only to indicate the words “UP” or “TOP”.

5.2.7 Pictorial symbols for marking (see Figure 30). Containers shall be marked with pictorial symbols to indicate special handling and storage needs, such as "TEMPERATURE LIMITS, DO NOT STACK, DO NOT DROP, DO NOT ROLL, CLAMP HERE, FRAGILE HANDLE WITH CARE, KEEP AWAY FROM HEAT and KEEP AWAY FROM COLD." They may appear on a label or be printed directly on the package. Affirmative symbols need not be framed by border lines, but all negative symbols, that is, "DO NOT …...." shall have borders with a slash mark across. Additional pictorial marking symbols and their application are illustrated in ASTM D 5445.

5.2.8 Warranty markings. (see Figure 29). When an item is procured with a warranty agreement, warranty markings shall be applied to all containers. Applicable warranty markings shall be placed on containers of serviceable/unserviceable materiel shipped from field units. Warranty markings shall indicate the time period or condition of the warranty (e.g., days/months, hours of operation, etc.). Warranty markings shall be applied by labeling, tagging, or printing and shall be prefaced by the words "WARRANTED ITEM." All warranty information, including "WARRANTED ITEM," shall be in upper case letters of the same style font. The markings shall be located adjacent to or below the identification markings. For multipacks that contain items covered by a warranty, the words “WARRANTED ITEMS INSIDE" shall be placed immediately below the identification markings.

Examples of warranty markings are:

WARRANTED ITEM WARRANTY EXPIRES AFTER 1000 HOURS OF OPERATION	WARRANTED ITEM WARRANTY EXPIRES 1 JANUARY 2003	WARRANTED ITEM WARRANTY GOOD FOR 180 DAYS FROM DATE ITEM IS PUT INTO USE

5.2.9 Lag bolt caution marking. Demountable crates shall be conspicuously marked with the words "REMOVE LAG BOLTS BEFORE OPENING."

5.2.10 Method 50 (see Figure 31). Desiccated packs shall bear a cautionary marking on the identification-marked side to alert personnel that the item is preserved with desiccant and shall not be opened prior to use. On unit packs and intermediate containers, cautionary markings may be applied by any means that provides a high degree of visibility and permanence. On exterior containers, these markings may be applied by any means that provides the required degree of

Source: https://assist.dla.mil -- Downloaded: 2016-12-01T07:08Z
Check the source to verify that this is the current version before use.

legibility and durability. When a cautionary marking is applied directly on the container, red marking ink that is waterproof, bleed-resistant, and resistant to ultraviolet ray degradation shall be used (see 6.6). When space is not available to permit the use of a label, the words "DESICCATED PACKAGE - DO NOT OPEN UNTIL READY FOR USE" shall be placed on the container adjacent to the identification markings.

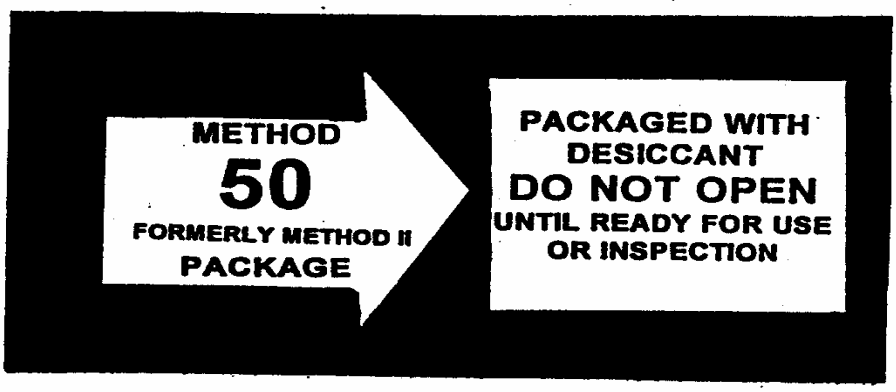

FIGURE 31. Method 50 marking.

5.2.11 Magnetized material. Containers and/or bare items that contain magnetized material, as defined in AFMAN 24-204(I)/TM 38-250/NAVSUP PUB 505/MCO P4030.19I/DLAI 4145.3/DCMAD1, CH3.4 (HM24), being shipped by military aircraft, shall be marked and labeled per said publication. Magnetized material, as defined by IATA and ICAO, shipped by commercial air, shall be marked and labeled in accordance with the ICAO and IATA regulations.

5.2.12 Engineering or technical order changes or modifications (see Figure 32). Containers of materiel that are furnished for a Modification Work Order (MWO) shall be marked with the MWO number preceded by the letters "MWO." The marking shall be located in the lower right-hand corner of the identification-marked side of the container.

5.2.13 Lot, batch, or identification control numbers (see Figure 32). Lot, batch, or identification control numbers shall be shown on unit packs, and intermediate and exterior containers. They shall be preceded by the proper designation, e.g., LOT NO 5, and shall be shown adjacent to the contract number.

5.2.14 Set or assembly markings (see Figure 33). When a set or assembly is placed in two or more containers, each container shall be marked with its own number within the set (i.e., 1 of 2), the total number of containers making up the set (i.e., 2 of 2), and the number of the set within each shipment (i.e., Set 1). Set or assembly markings shall be placed in the lower right-hand corner of the identification-marked side of the container as shown. A 2-inch disc of a high contrast color shall be placed above the numbers on each container.

Source: https://assist.dla.mil -- Downloaded: 2016-12-01T07:08Z
Check the source to verify that this is the current version before use.

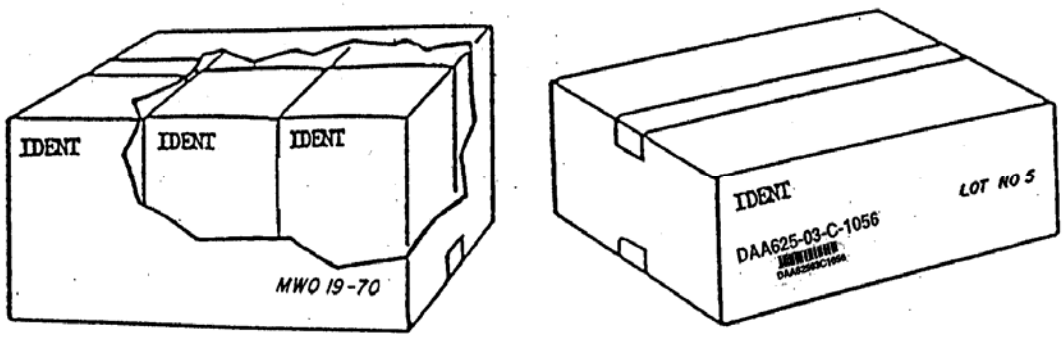

FIGURE 32. Examples of special markings (Modification Work Order (MWO), and lot number markings on unit packs and intermediate and exterior containers).

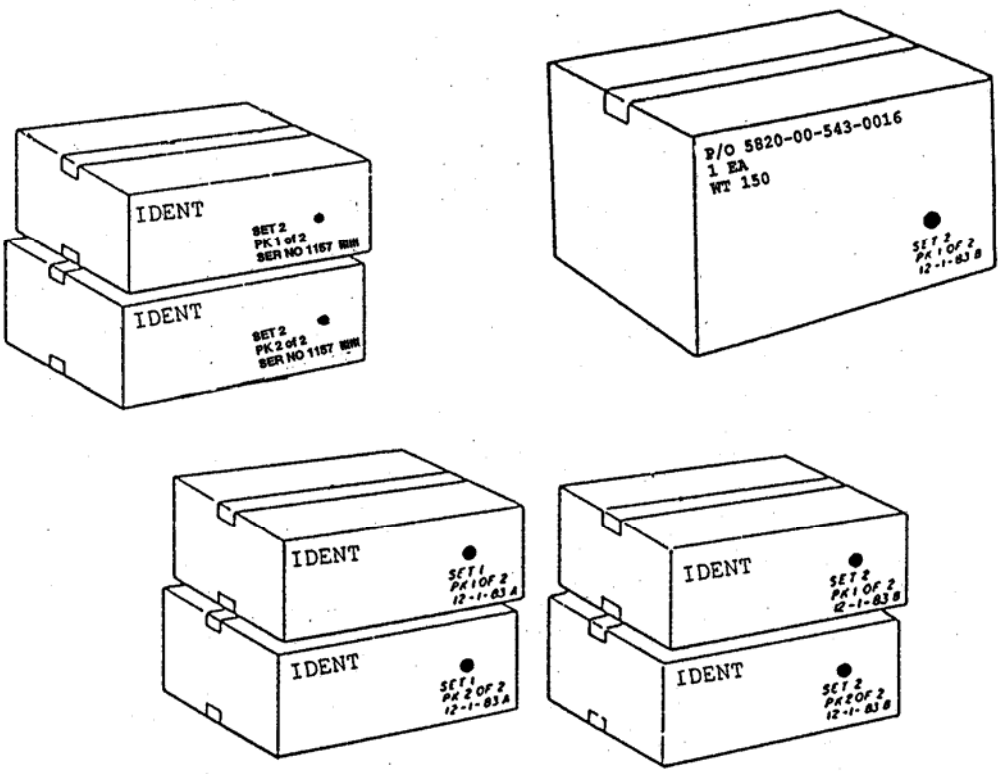

FIGURE 33. Examples of special markings (set or assembly markings, with component parts of disassembled items and single stock-numbered set markings).

Source: https://assist.dla.mil -- Downloaded: 2016-12-01T07:08Z
Check the source to verify that this is the current version before use.

5.2.14.1 Set or assembly marking for component parts of disassembled items (see Figure 33). All component parts of disassembled items shall have the assigned serial number of the item shown in-the-clear and bar coded on each shipping container comprising the applicable set. When an item is assigned a UII, the concatenated UII shall be applied to each shipping container comprising the applicable set using the 2D (PDF417) symbol, which is annotated with the human readable information “ID DATA INCLUDES UII(s) (if required)”. The letters are not encoded. Human readable interpretation text for the 2D (PDF417) symbol is optional. The required serial number (if any) shall be shown immediately below the fractional number that identifies the individual container and the total number of containers comprising the set. When an item that does not have a serial number is disassembled for shipment, a date (month, day, and year) followed by a capital letter to identify a set or assembly shall be shown on the shipping container in lieu of a serial number. Each set shall bear a different letter. Double letters may be used, when appropriate.

5.2.14.2 Single stock-numbered and part-numbered sets (see Figure 33). When the components of a single stock-numbered or part-numbered item are packed in two or more shipping containers or are stored together as a set, the stock number or part number shown on each shipping container shall be that of the complete set and shall be prefixed with "P/O" (part of).

5.2.14.3 Single stock-numbered and part numbered sets with different stock numbered parts (see Figure 34. When a single stock numbered item is packed along with related parts having different stock numbers, in addition to marking the complete set stock number, the stock number(s) of the subordinate components shall be listed at the bottom of the container identification markings and shall be prefixed by the words “CONSISTING OF”. The component information shall include the quantity and unit of measure.

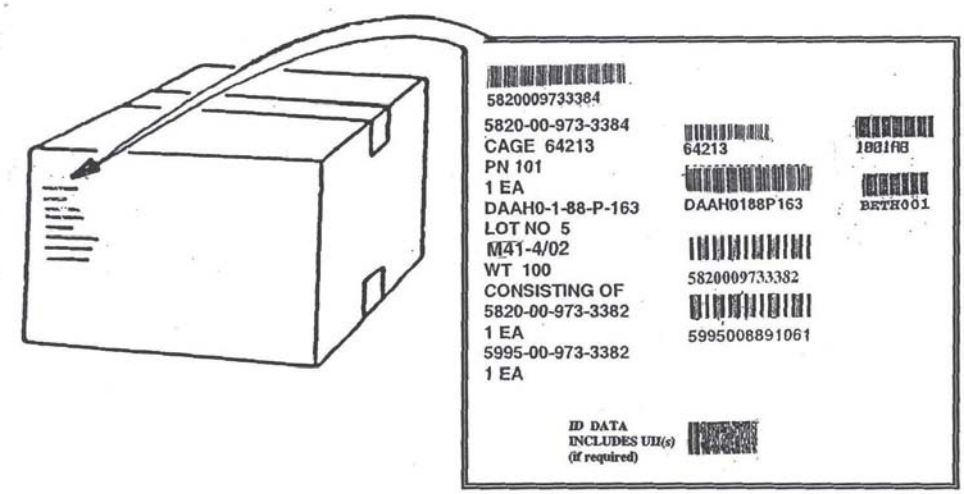

FIGURE 34. Single stock numbered item consisting of other stock numbered items in a single container.

Source: https://assist.dla.mil -- Downloaded: 2016-12-01T07:08Z
Check the source to verify that this is the current version before use.

5.2.15 Consolidation containers. Consolidation containers that are shipped to a single destination but contain individual shipments/containers for multiple consignees (multiple DoD activity address codes) with the same TAC codes shall have the words "MULTIPLE DoDAACS" applied to the outside of the container below the identification markings. This requirement applies to "kits" only if they are individual shipments that are consolidated into one container and sent to a single destination for multiple consignees. The size of the marking shall be as specified in 5.1.9 and shall be proportionate with the overall size of the consolidation container.

5.2.16 Expedited handling - not mission capable supply (NMCS) and 999 (see Figure 35). Requisitions and contracts identified as NMCS shipments shall have an NMCS code shown in the RDD block of the address label. The applicable code is 999 or the letter "N," which may be followed by the RDD expressed in the number of days from the date of requisition. NMCS condition 999 shipments shall be marked with two 999 labels, one placed adjacent to the address markings and one placed on the opposite side of the container. For NMCS conditions other than 999, one NMCS label shall be placed adjacent to the address markings and one on the opposite side of the container.

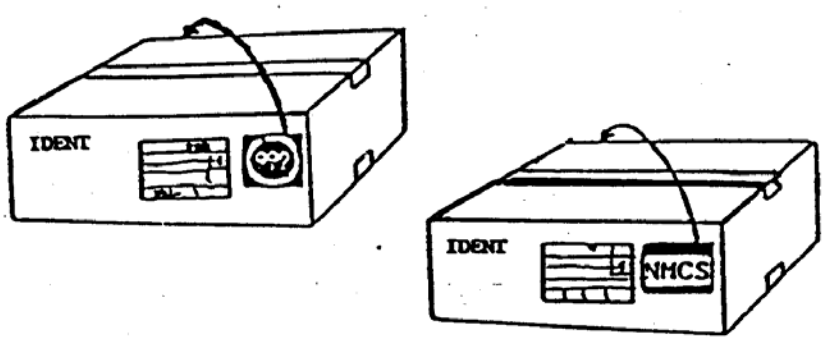

FIGURE 35. Examples of expedited handling labels.

5.2.17 Center of balance and lifting and tiedown points (see Figure 36). When the weight of an item is not evenly distributed, a 1-inch wide vertical line not less than 3 inches long locating the center of balance shall be extended up from the bottom edge of both sides of the item or its container, regardless of its length. The words "CENTER OF BALANCE" shall be clearly marked by any means that provides the required degree of legibility and durability in 1-inch letters above or alongside the line. On unboxed equipment and vehicles, the identification of lifting or tiedown provisions used for transport shall be stenciled in locations on the exterior of the equipment in letters not less than 1 inch in height. Accessories resembling provisions for lifting or tiedown shall be located or designed to avoid mistaken use as unacceptable for lifting or tiedown. On vehicles that are painted white, yellow, or another light color, the sling or lift points markings shall be

Source: https://assist.dla.mil -- Downloaded: 2016-12-01T07:08Z
Check the source to verify that this is the current version before use.

black, and the words "LIFT HERE" with an arrow pointing to the lifting eyes, placed above or alongside the lifting eyes. When space does not permit, the size of the arrow and lettering may be reduced accordingly. CARC paint or ink shall be used, when appropriate. The center of balance markings are not required on items such as MILVANs/SEAVANs which are not handled by forklifts.

5.2.18 Load bearing areas and lift points (see Figure 36). When exterior shipping containers and their contents are subject to damage caused by uneven container stresses or strains, load bearing areas and lift points shall be marked on the exterior of the container. The words "LOAD BEARING AREA" shall be marked on opposite panels of the container directly over the load bearing area. The words "FORKLIFT AREA" shall be placed directly over the forklift entry points.

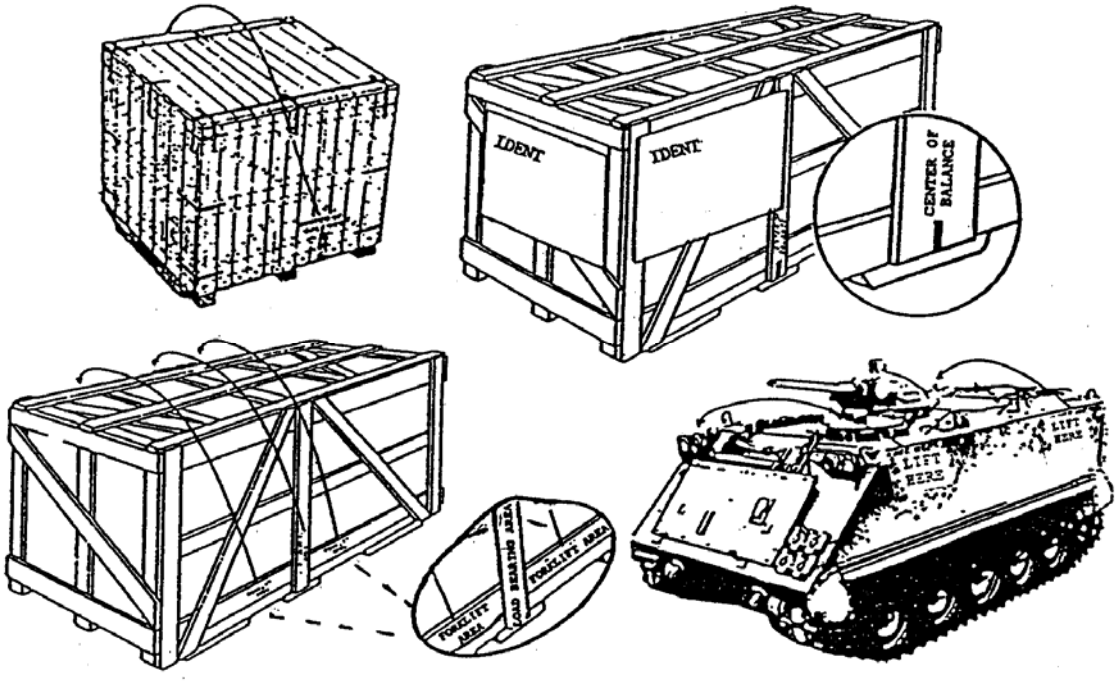

FIGURE 36. Center of balance, load bearing area, and lifting and tiedown points.

5.2.19 Axle weight markings. When axle weight markings are required, they shall be marked above each axle by stenciling or printing in 1-inch letters the words "AXLE WT" followed by the weight in pounds. The size of the lettering may be reduced, when necessary. When marking directly on the equipment, paint shall be soluble in paint thinner or mineral spirits. CARC paint or ink shall be used when appropriate.

Source: https://assist.dla.mil -- Downloaded: 2016-12-01T07:08Z
Check the source to verify that this is the current version before use.

5.2.20 Electrostatic discharge (ESD) sensitive devices (see Figure 37). All unit packs and intermediate and exterior containers of ESD sensitive devices that are susceptible to damage from ESD shall be marked as follows:

5.2.20.1 Unit packs. All unit packs shall be marked with the ESD sensitive devices attention label prescribed by ASTM D 5445. The label shall include the ESD sensitive device symbol (triangle and reaching hand), the words “ATTENTION STATIC SENSITIVE DEVICES,” and the statement “HANDLE ONLY AT STATIC SAFE WORK STATIONS." The symbol and lettering on the label shall be marked in black on a yellow background.

5.2.20.2 Intermediate and exterior containers. Intermediate and exterior containers shall be marked with the ESD sensitive devices attention label. The label used will be sized proportionate to the size of the container. The ESD sensitive devices symbol and the words "ATTENTION OBSERVE PRECAUTIONS FOR HANDLING ELECTROSTATIC DISCHARGE SENSITIVE DEVICES" shall be marked in black on a yellow background. One label shall be placed on the identification-marked side of an intermediate container. Two labels shall be placed on an exterior container. One label shall be placed on the identification-marked side (or surface), and one label shall be placed on the opposite side (or surface). If the label is temporarily unavailable, intermediate and exterior containers shall be marked with the ESD sensitive devices symbol and the words "ATTENTION OBSERVE PRECAUTIONS FOR HANDLING ELECTROSTATIC DISCHARGE SENSITIVE DEVICES". The minimum size of the symbol shall be five-eighths of an inch measured vertically at the base of the triangle. When preprinted labels are not used, the symbol shall be printed in black or the same color as the identification markings, if other than black.

Source: https://assist.dla.mil -- Downloaded: 2016-12-01T07:08Z
Check the source to verify that this is the current version before use.

Unit pack symbol/label

Exterior and intermediate container label

FIGURE 37. ESD sensitive devices attention symbols and labels.

5.2.21 Materiel condition markings. As prescribed in TM 38-400/NAVSUP PUB572/AFJMAN 23-210/MCO 4450.14/DLAM 4145.12, materiel condition tags or labels shall be used whenever materiel may become mixed during storage or shipment within or between installations, or where physical evidence is necessary for materiel control to prevent duplicate inspections, or both. Implementation of this requirement by the respective departments and agencies will afford specific guidance concerning use and application. Tags and labels shall conform to the color, design, and material (to include the strength of the paperboard) of the Government produced item. Computer-generated, adhesive-backed labels may be used in conjunction with material condition tags. The following forms are authorized for use to indicate the condition(s) of the materiel and to identify the individual article or contents of the package, bundle, or container to which they are securely attached. These forms are not for indiscriminate use on serviceable materiel that presents no problem in storage and transfer. One tag or label shall be applied to the item and one shall be applied to the identification side of the shipping container. This application is in addition to the marking requirements in this standard. If several items or unit packs are placed in a single shipping container, then each item or unit pack must be labeled or tagged.

a. DD Form 1574 (Serviceable Tag - Materiel) and DD Form 1574-1 (Serviceable Label - Materiel). Use for materiel that is serviceable (e.g., issuable without qualification, issuable with qualification, or priority issue). The tag and label shall have yellow borders and letters. When preprinted letters are not legible, black lettering may be used. To assist in identification, a 1- by 5-inch yellow stripe may also be printed on the back of each tag.

Source: https://assist.dla.mil -- Downloaded: 2016-12-01T07:08Z
Check the source to verify that this is the current version before use.

b. DD Form 1577-2 (Unserviceable (Reparable) Tag - Material) and DD Form 1577-3 (Unserviceable (Reparable) Label - Material). Use for materiel that is unserviceable (e.g., limited restoration, reclamation, reparable, or incomplete). The tag and label shall have green borders and letters. To assist in identification, a 1- by 5-inch green stripe may also be printed on the back of each tag.

c. DD Form 1577 (Unserviceable (Condemned) Tag - Material) and DD Form 1577-1 (Unserviceable (Condemned) Label – Material). Use for materiel that is unserviceable (e.g., condemned or scrap). The tag and label shall have red borders and letters. To assist in identification, a 1- by 5-inch red stripe may also be printed on the back of each tag.

d. DD Form 1575 (Suspended Tag - Material) and DD Form 1575-1 (Suspended Label – Material). Use for materiel that is suspended (e.g., stocks awaiting classification, returns awaiting classification, ammunition suitable for emergency combat use only, reclaimed items awaiting condition determination, quality deficiency exhibits, or stocks that are being held pending negotiation or litigation). The tag and label shall have brown borders and letters. To assist in identification, a 1- by 5-inch brown stripe may also be printed on the back of each tag.

e. DD Form 1576 (Test/Modification Tag - Material) and DD Form 1576-1 (Test/Modification Label - Material). Use for serviceable materiel that requires technical data markings, testing, alteration, modification, conversion, disassembly, etc., prior to issue. The tag and label shall have blue borders and letters. To assist in identification, a 1- by 5-inch blue stripe may also be printed on the back of each tag.

5.2.22 Hardness critical item (HCI). Unit packs, intermediate and exterior containers housing items identified on the parts list as "HCI" shall be stamped, stenciled, or labeled with the symbol "HCI" or the words “HARDNESS CRITICAL ITEM”. The HCI symbol or wording shall be placed on the identification-marked side and the end of the container to the left of the identification-marked side of rectangular containers, and on two equally spaced areas on the circumference of cylindrical containers. The HCI lettering shall be black in color, and the size of the lettering shall conform to the requirements of 5.1.9. On forest-green containers, the HCI lettering shall be either yellow or white in color.

5.3 Exterior container documentation. A complete packing list and/or the applicable shipment documentation as identified below will be attached to the No. 1 exterior container of each shipment unit. For shipment units partialed or split into shipment increments in accordance with DoD 4500.9-R, Part II, Appendix L, a complete packing list and/or the applicable shipment documentation as identified below will be attached to the lowest numbered piece of each shipment unit increment’s exterior container. For information on exceptions to the use of exterior container documentation, see 5.3.3.

Source: https://assist.dla.mil -- Downloaded: 2016-12-01T07:08Z
Check the source to verify that this is the current version before use.

5.3.1 Packing lists (see Figure 38). A packing list identifies the contents of a single-piece or multi-piece shipment unit. Automated packing lists (APLs) shall contain the minimum data listed in DoD 4000.25-1-M. They shall be sealed in water-resistant envelopes and secured to the exterior of the palletized load or container in the most protected location. The use of packing list protectors is recommended.

a. Sets, kits, or assemblies composed of unlike items but identified by a single stock number or part number, shall have a packing list identifying each item securely attached to the end or side of each container. An additional packing list placed inside each container is recommended.

b. Sets with two or more exterior shipping containers of different stock numbered or part-numbered items require a master packing list. One copy of the master packing list shall be attached to container No. 1 and one copy placed inside container No. 1.

c. The contents of packages containing installation or assembly hardware such as brackets, connectors, nuts, bolts, and washers shall be listed in detail on the packing list.

d. "Kit contents lists" shall be placed inside each "kit container" and shall not be included with the packing list on the outside of the exterior container. The kit contents list may be placed on a DD Form 250 or on a locally prepared list. This list will not be included as part of the exterior shipping container packing list.

5.3.1.1 Packing list – multiple container shipments (see Figure 38). When specified in the contract or purchase order or when requested by the procuring activity, contractors shall place a packing list inside each container and attach a packing list to the outside of each container. If this requirement is not specified in the contract or requested by the procuring activity, a packing list shall be applied as specified in 5.3.2.1 through 5.3.2.4.

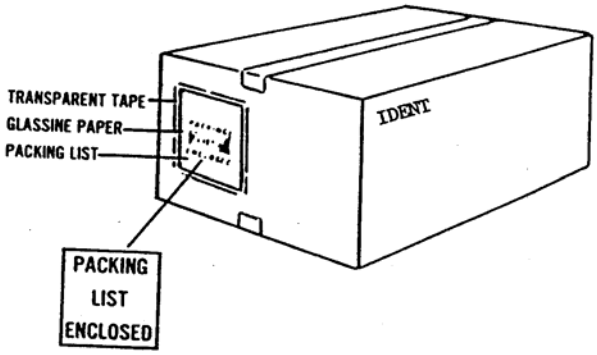

FIGURE 38. Packing list application.

Source: https://assist.dla.mil -- Downloaded: 2016-12-01T07:08Z
Check the source to verify that this is the current version before use.

5.3.1.2 DD Form 250 (Material Inspection and Receiving Report). A DD Form 250, prepared in accordance with DFAR Supplement (Appendix F), shall be used as a packing list for contractor shipments and shall be applied to each exterior container. Copies shall be in addition to those required for standard distribution as specified in the DFARS and each shall be marked "Packing List." All applicable data shall be included on the form. When a DD Form 250 is prepared for a Direct Vendor Delivery (DVD) shipment, it shall include issue/receipt bar code marks (see 4.5).

5.3.1.3 DD Form 1155 (Order for Supplies or Services/Request for Quotation). A DD Form 1155 shall be attached to a vendor's commercial packing list and applied to applicable exterior containers.

5.3.1.4 Application of packing lists (see Figure 38). Exterior packing lists shall be sealed in water-resistant envelopes and secured to the exterior of the palletized load or container in the most protected location. For interior packing lists, the use of packing list protectors is recommended.

5.3.1.5 DD Form 1384 (Transportation Control and Movement Document (TCMD). A TCMD shall be completed in accordance with DoD 4500.9-R, Part II, Cargo Movement, Appendix M, with all entries except for DTS carrier information. It shall be inserted in the packing list envelope on the No. 1 container for those shipment units forwarded to a CONUS CCP.

5.3.1.6 DD Form 1149 (Requisition and Invoice Shipping Document). A DD Form 1149 may be used as a single item or multiple item packing list for non-MILSTRIP DoD shipments and shall be applied, when applicable, in the same manner as described for the forms in 5.3.2.1 through 5.3.3.

5.3.2 DD Form 1348-1A (see Figure 39). The DD Form 1348-1A shall be used by DoD shippers and as specified in the contract. It shall be prepared in accordance with DoD 4000.25-1-M.

5.3.2.1 Shipment units of single-line items. For single-line item shipments, one legible copy of the DD Form 1348-1A shall be attached to the materiel in shipping container No. 1. In addition, at least one legible copy of the applicable form shall be enclosed in a water-resistant envelope attached to the outside of the shipping container. When the storage container is used as the shipping container, the copy normally placed inside the container shall be enclosed with the copy attached to the exterior of container No. 1.

Source: https://assist.dla.mil -- Downloaded: 2016-12-01T07:08Z
Check the source to verify that this is the current version before use.

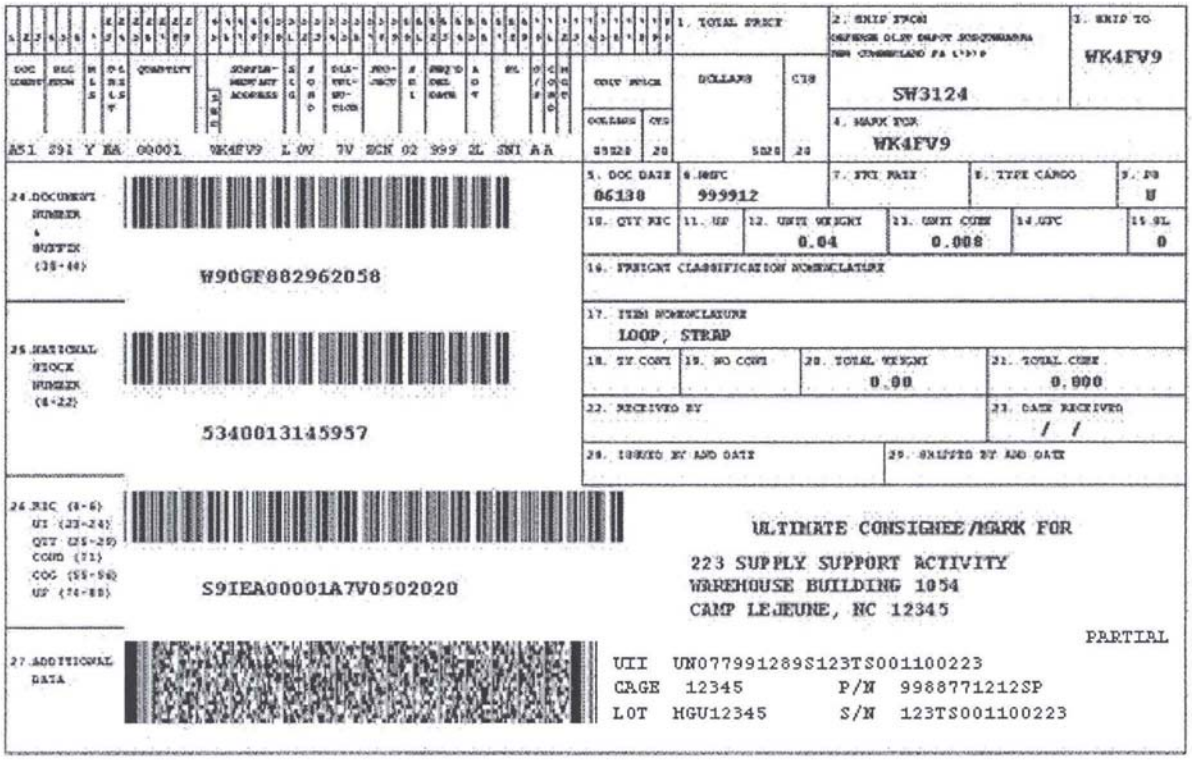

FIGURE 39. Sample of a DD Form 1348-1A, Issue Release/Receipt Document (IRRD).

5.3.2.2 Shipment units of multiple-line items. For multiple- line item shipments, one copy of the DD Form 1348-1A shall be placed in a water-resistant envelope so that the NSN is visible. The envelope shall be attached to the package applicable to each requisition. When a polyethylene bag is used to group single items for packing, the same bag shall contain a DD Form 1348-1A folded so that the identification and requisition information are visible. At least one copy of the form, applicable to each requisition, shall also be placed in a water-resistant envelope attached to the exterior of each multipack container.

5.3.2.3 Alternate method of attaching DD Forms 1348-1A and APLs to fiberboard boxes. DD Forms 1348-1A and APLs may be attached to fiberboard boxes in the following manner. Prior to sealing the fiberboard box, place the appropriate papers in a water-resistant envelope. Then place the envelope under the flaps of the box so that the open end/flap of the envelope extends down the end of the box under the closure tape. Place the words "PAPERS HERE" on the tape in letters at least half an inch high directly over the envelope containing the papers. This is not authorized for FMS shipments, except for those sent by registered mail. When shrink or stretch film is used to consolidate multiple items, one copy of the DD Form 1348-1A or APL shall be attached to the materiel. For single items, two copies of the applicable form shall be placed under the shrink film in such a manner as to be read. This method is not authorized for FMS shipments.

Source: https://assist.dla.mil -- Downloaded: 2016-12-01T07:08Z
Check the source to verify that this is the current version before use.

5.3.2.4 Method of attaching accompanying documentation for shipments of vehicles. A minimum of two copies of the DD Form 1348-1A or DD Form 250 shall be provided and shall be securely attached in or on the vehicle as follows:

a. Interior. Place one copy of the shipping document and one copy of the preservation/ depreservation guide inside a sealed bag or water-resistant envelope. Attach the bag or envelope to a conspicuous location inside the vehicle.

b. Exterior. Place the remaining copy of the shipping document and preservation/depreservation guide, unit packed as specified above, on the vehicle adjacent to the shipping address and securely attach the bag or envelope.

5.3.3 Exceptions to the use of exterior container documentation. With the following exceptions, exterior container documentation is required on all contractor, DoD, and FMS shipments.

a. No exterior documentation is required for containers of like items or single-item packs when the contents are listed on a label attached to the boxes, lithographed or printed on the boxes, or when a manufacturer's part list is provided (see Figure 34).

b. For controlled, sensitive, classified, and pilferable items (except for FMS shipments), the shipping documentation shall be placed inside all containers rather than on the outside. For classified shipments, markings which indicate the classified nature of the materiel and its security classification shall not appear on the exterior of each container if it will identify the classified nature of the shipment.

5.4 DD Form 1348-1A bar code data requirements (see figure 39). The following encoded data are required on the DD Form 1348-1A.

5.4.1 DD Form 1348-1A linear (Code 39) bar codes.

a. Linear (Code 39) bar coded data with HRI for issue to services/agencies.

(1) Document number and suffix assigned to the requisition for a maximum fourteen characters should be bar coded in block 24.

(2) Thirteen digit National Stock Number (NSN) and two additional codes, as applicable, per DoD 4000.25-1-M, Appendix 2.5.2, should be bar coded in block 25. In the absence of the NSN and the additional codes, the CAGE and Part Number will be used for a maximum of 15 characters.

Source: https://assist.dla.mil -- Downloaded: 2016-12-01T07:08Z
Check the source to verify that this is the current version before use.

(3) Three character from Routing Identifier code (RIC), two character Unit of Issue (UI), five digit zero filled Quantity (QTY), one character Condition code (COND), blank or last two characters of the Distribution Code (DIST), and a seven digit zero filled Unit Price (UP) showing dollars and cents with no decimal bar coded in block 26. The bar code will have a fixed length of 20 characters to include leading zeros and blanks.

b. Linear (Code 39) bar coded data, with HRI requirements, for issue to FMS/Grant Aid customers.

(1) Document number and suffix assigned to the requisition for a maximum fourteen characters should be bar coded in block 24.

(2) Thirteen digit National Stock Number (NSN) and two additional codes, as applicable, per DoD 4000.25-1-M, Appendix 2.5.2, should be bar coded in block 25. In the absence of the NSN and the additional codes, the CAGE and Part Number will be used for a maximum of 15 characters.

(3) Two character Unit of Issue (UI), five digit zero filled Quantity (QTY), one character Condition code (COND), a seven digit zero filled Unit Price (UP) showing dollars and cents with no decimal, and the first position and last 3 positions of supplementary address DoDAAC should be bar coded in box 26. The bar code will have a fixed length of 19 characters to include leading zeros and blanks.

c. The application of linear bar codes on the DD Form 1348-1A will be in accordance with ISO/IEC 16388, with the following exceptions:

(1) The height of the bar code shall be at least 0.25 inch, regardless of the density (characters per inch).

(2) The length of the bar code shall not be greater than 4.0 inches for boxes 24 and 25. Each field shall be a fixed length of 15 characters. When there is an absence of any character(s) within these 2 fields (less than 15), encoded spaces shall be used as fillers following the given data.

(3) The length of the bar code in box 26 shall not be greater than 4.5 inches. Encoded spaces shall be used as fillers for any unknown, or unencoded, data characters.

5.4.2 DD Form 1348-1A 2D (PDF417) bar code. The 2D (PDF417) bar code will be used in block 27 of the DD Form 1348-1A to enter additional data for internal use by the shipping activity. Human readable interpretation text may be used with 2D (PDF417) symbol encoded information. The symbol will encompass all the data elements in blocks 24 through 27, including concatenated UIIs, and will be used in addition to the linear (Code 39) bar codes. The 2D (PDF417) symbol data identifier format for elements to be encoded on the DD Form 1348-1A can be found in DoD 4000.25-1-M, Appendix 1.35.

Source: https://assist.dla.mil -- Downloaded: 2016-12-01T07:08Z
Check the source to verify that this is the current version before use.

5.5 Hazardous materials (HAZMAT). The marking and labeling requirements for shipment and storage of HAZMAT, including ammunition and hazardous wastes, shall be accomplished as stated in this standard and in the applicable regulatory documents.

5.5.1 HAZMAT marking and labeling requirements. Depending on the mode of transportation, HAZMAT shall be marked and labeled in accordance with Title 49 CFR, ICAO Technical Instructions for the Safe Transportation of Dangerous Goods by Air, IATA Dangerous Goods Regulations, the IMO IMDG Code for water shipments, and AFMAN 24-204(I)/TM 38-250/NAVSUP PUB 505/MCO P4030.19I/DLAI 4145.3/DCMAD1, CH3.4 (HM24) for military air shipments, as applicable. Proper shipping names (PSNs), HAZMAT North American (NA) or United Nations (UN) identification numbers, IATA/ICAO temporary identification (ID) numbers, DOT assigned EX (explosives) numbers (for ammunition items with no assigned NSN/DoDIC), HAZMAT classification warning labels, and HAZMAT UN standard container certification markings shall be placed on the exterior container, as required. Government-owned Class I (explosives) that were packaged, marked and labeled prior to 1 January 1990 and destined for surface shipment or military air shipment need not be remarked. The shipper is also responsible for completing a Shipper's Declaration for Dangerous Goods form for every military air shipment containing dangerous goods, including hazardous materials. See Interservice Manual AFMAN 24-204(I)/TM 38-250/NAVSUP PUB 505/MCO P4030.19I/DLAI 4145.3/DCMAD1, CH3.4 (HM24) for instructions on how to properly complete the form.

5.5.2 Proper shipping name and identification number (see Figure 40). The PSN and NA or UN identification number shall be marked on the exterior shipping container. PSNs for n.o.s. items must be followed by a technical name in parentheses. The PSNs and identification numbers are listed in Title 49 CFR, 172.101, latest revision, and in AFMAN 24-204/TM 38-250/ NAVSUP PUB 505/MCO P4030.19I/DLAI 4145.3/DCMAD1, CH3.4 (HM24), Attachment 4. NA numbers are not authorized for international shipments. The applicable international modal document shall be used to determine the UN PSN and identification number for international shipments.

5.5.3 Marking and labeling of multipacks containing HAZMAT. When a multipack contains HAZMAT, the PSNs, with applicable ID numbers, shall be marked on each applicable container in the multipack. They shall also be listed on the identification-marked side of the multipack. Applicable HAZMAT classification warning labels for each class of material contained in the multipack shall also be applied on the outside surface.

Source: https://assist.dla.mil -- Downloaded: 2016-12-01T07:08Z
Check the source to verify that this is the current version before use.

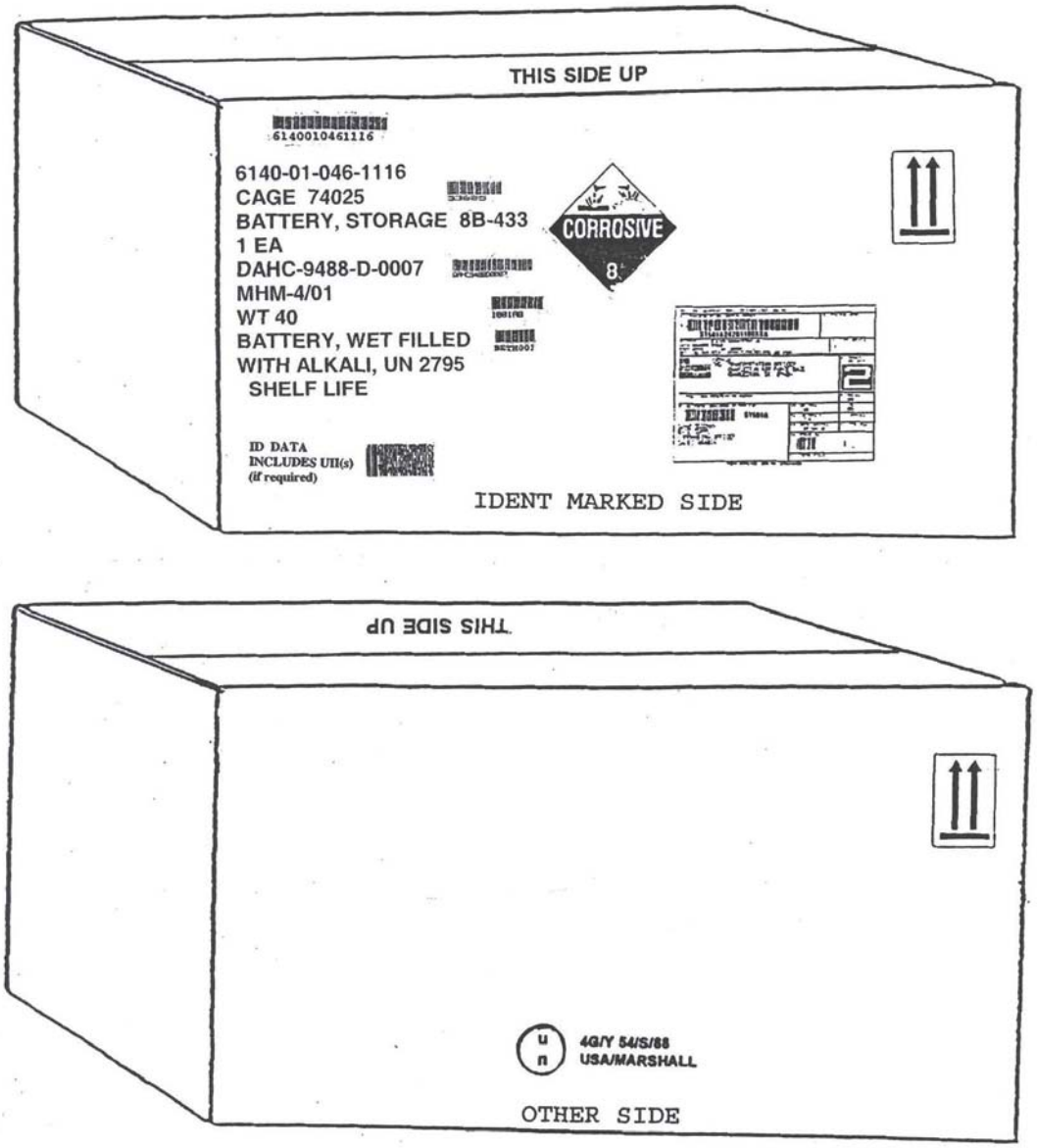

FIGURE 40. Example of exterior container HAZMAT marking and labeling requirements.

5.5.4 Marking and labeling of air and water shipments. Marking and labeling requirements for shipments of HAZMAT by domestic commercial air are specified in Title 49 CFR and by international air in the ICAO Technical Instructions and the IATA Dangerous Goods Regulations. When shipment is by military airlift or contract carrier, the requirements of AFMAN 24-204(I) TM 38-250/NAVSUP PUB 505/MCO P4030.19I/DLAI 4145.3/DCMAD1, CH3.4 (HM24) shall apply. In addition, for all military air shipments, the outer container of combination packages, having inner receptacles that contain a liquid HAZMAT, shall also be marked “AIR ELIGIBLE”

Source: https://assist.dla.mil -- Downloaded: 2016-12-01T07:08Z
Check the source to verify that this is the current version before use.

to verify that either the inner container(s) or the outer container meet the internal pressure requirements for air eligibility. This required marking is in addition to any applicable UN-recommended performance specification (certification) markings (see 5.6.2f and Figures 40 and 41). When known, the tested kilopascals (kPa) may be marked below the "Air Eligible" wording. A kPa is the international unit of measure for internal pressure. The formula for converting to kilopascals is "psi X 6.89 = kPa." The words “AIR ELIGIBLE” are not required for single containers of HAZMAT because the kPa is already a part of the UN certification code. The marking and labeling requirements for the shipment of HAZMAT by vessel are specified in Title 49 CFR and in the IMO IMDG Code. The IMO IMDG Code is used for overseas shipments by vessel.

5.5.5 Identifying containers and packagings (see Figure 40). Containers or configurations (packagings) shall be identified as complying with containers identified in DOT regulations, or Federal or military specifications. When a container that is manufactured to a Government approved drawing, or specification has successfully passed all applicable UN-recommended performance tests, both the UN performance specification (certification) markings (see 5.5.5.1) and applicable Government approved drawing or container specification marking shall be applied.

5.5.5.1 DOT specification and UN performance specification (certification) markings (see Figures 40 and 41). When a container complies with a UN standard, the container must be marked as required by the applicable specification (see Part 178 of Title 49 CFR). This is normally the responsibility of the container manufacturer. The symbol indicated in Figure 40 will be the registered symbol of the contractor, packaging manufacturer or DoD/DOT-approved testing facility, or combination thereof, who certified the package as successfully passing all of the required tests. Packages over 66 pounds require duplicate markings on the top or side. The UN symbol and the size of the lettering shall also conform to the requirements of Part 178 of Title 49 CFR.

5.5.5.2 Specialized containers (see Figure 40). When a container is manufactured to a Government-approved drawing or specification, it shall be identified as such. When the complete package, including cushioning and blocking materials, inner container(s), and the shipping container, is covered by a detailed procedure in a specification or Government approved drawing, the applicable specification or packaging drawing shall be marked on the container in an inconspicuous location, such as the bottom of the container. This additional marking need not be applied to containers with name-plates when the contents are specific to the container (e.g., an MK 46 Torpedo in an MK 535 container) or to packages when the entire packaged configuration is described by the NSN which is also part of the identification markings. These type containers may be used to ship HAZMAT domestically and internationally when covered by a Competent Authority Approval (CAA) or the packaging has successfully passed all applicable UN-recommended performance tests and is so marked. When the authorized packaging configuration has successfully passed the UN recommended performance test and the packaging is marked with the applicable certification markings, and when military requirements such as detailed drawings specify over-packing of this configuration, then the testing and subsequent marking of the outer container are unnecessary.

Source: https://assist.dla.mil -- Downloaded: 2016-12-01T07:08Z
Check the source to verify that this is the current version before use.

5.5.5.3 DOT special permits (SPs). When a DOT-SP is applicable, the DOT-SP number (e.g., DOT-SP-7605) shall be placed near the PSN and any other required cautionary markings. DOT-SPs shall not apply to international shipments unless the HAZMAT is exempted from UN certification marking requirements.

5.5.5.4 Certification of Equivalency (COE). When a COE has been issued, the container certification number shall be applied near the PSN and any other cautionary markings. COEs shall not apply to international shipments, unless the HAZMAT is exempted from UN certification marking requirements.

5.5.5.5 Competent Authority Approval (CAA). The competent authority, which is DOT, may grant permission to use a package without POP testing it. If required by the CAA, the approval number must appear on the package in association with the PSN and ID number. All requests for CAAs shall be documented as specified in Title 49 CFR and Joint Regulation DLAD 4145.41/ AR 700-143/AFJI 24-210/NAVSUPINST 4030.55B/MCO 4030.40B.

5.5.5.6 Overpack/multipack containers. When the authorized packaging configuration has successfully passed the UN-recommended performance tests and the packaging is marked with the applicable UN performance specification (certification) markings, and when military requirements specify overpacking of the packaging configuration in an outer container (placing a fiberboard box in a wood box), then the testing and subsequent marking of the outer container is unnecessary. In addition to the required markings, conformance with UN recommendations shall be shown by marking the outer container with the word: "OVERPACK." This marking, however, is not sufficient for combination packages consisting of overpacked inner packagings which contain liquids and are transported by military aircraft. For all military air shipments containing HAZMAT liquids, the outer container shall be marked “AIR ELIGIBLE” to indicate that either the inner receptacles or the outer container meet the internal pressure requirements for air eligibility. Multipack containers comprised of performance-tested packagings shall also be marked with this information to certify conformance with UN recommendations. When two or more packages of compatible HAZMAT are placed within the same outside container or overpack, the outside container or overpack shall be labeled as required for each class of HAZMAT contained therein.

5.5.6 Documentation for HAZMAT. The shipper is responsible for the completion of a Shipper’s Declaration for Dangerous Goods form for each and every military air shipment containing dangerous goods. See the Interservice Manual AFMAN 24-204(I)/TM 38-250/NAVSUP PUB 505/MCO P4030.19I/DLAI 4145.3/DCMAD1, CH3.4 (HM24) for instructions on how to properly complete the form.

Source: https://assist.dla.mil -- Downloaded: 2016-12-01T07:08Z
Check the source to verify that this is the current version before use.

(un) 4G/X6/S/92
USA/***

where

(un)	is the symbol used to CERTIFY that packaging complies with UN recommendations for the item and packaging.
4G	is the UN recognized symbol for a fiberboard box which has been successfully tested to UN recommended drop, stack, vibration, and water absorptive performance criteria.
X	is a letter designating the packing group for which the fiberboard box configuration has been successfully tested. X is used for Packing Group I. Y is used for Packing Group II. Z is used for Packing Group III. Unless the requirements of Title 49 CFR, 173.24a, are met, items of a lesser packing group may be packaged in a box, marked, and tested to a higher packing group provided the tested weight is not exceeded.
6	is the maximum authorized gross weight for solids, expressed in kilograms, for which the packaging has been tested.
S	indicates packaging inner contents are either solids or other inner containers (e.g., cans or bottles).
92	is the last two digits of the year during which the packaging was manufactured.
USA	is State (country) authorizing allocation of the mark.
***	is the symbol of the party that is responsible for ensuring that the UN recommendations have been met. The appropriate symbol shall be the contractor's authorized symbol or as stated in the contract, order purchase agreement, specification, special packaging instruction, or other written direction by the packaging design agency or by higher headquarters.

FIGURE 41. Example of UN performance specification (certification) markings for a fiberboard box (additional information can be found in Title 49 CFR, Subpart L, 178.500 through 178.503).

Source: https://assist.dla.mil -- Downloaded: 2016-12-01T07:08Z
Check the source to verify that this is the current version before use.

5.5.6.1 Existing palletized unit loads of HAZMAT. Existing palletized unit loads of HAZMAT in the DoD stockpile identified as having passed the UN performance specification (certification) testing requirements shall have the UN certification markings applied to placards placed on two opposite sides of the pallet load in lieu of marking each container. This rule also applies to material having different DOT and UN PSNs.

5.5.7 Flash point marking (see Figure 42). All unit packs and intermediate and exterior shipping containers packed with flammable liquids (flash point of not more than 60.5 degrees Celsius (C) or 141 degrees Fahrenheit (F)) shall be marked with the flash point of the material. The flash point shall be preceded by the words "FLASH POINT" and shall be followed by the letter "C" or "F," as appropriate. The flash point marking may be shown in degrees C, F, or both and shall be applied in a conspicuous location on the identification-marked side of the container. If space is not available on the identification-marked side, the required HAZMAT markings, labeling, and the flash point marking may be placed on the opposite side. The size of the lettering shall be proportionate to the available marking space. The flash point shall be determined by using the testing methods prescribed in Title 49 CFR.

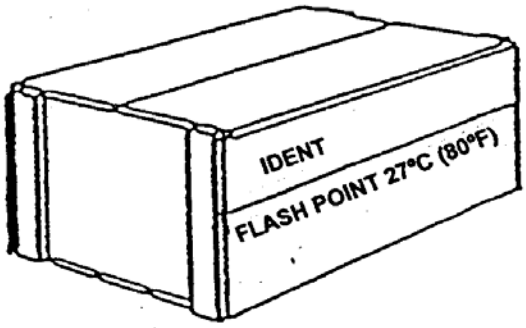

FIGURE 42. Flash point markings.

5.5.8 Specific hazards.

5.5.8.1 Asbestos (see Figure 43). Containers of asbestos and products containing asbestos which may be expected to produce dust in excess of the Occupational Safety and Health Administration's (OSHA) exposure limits during handling, processing, storage, disposal, or transportation shall be marked with a warning label, as specified in OSHA's Title 29 CFR.

5.5.8.2 Polychlorinated biphenyls (PCBs) (see Figure 43). As required by the Environmental Protection Agency (see Title 40 CFR), unit packs and intermediate containers, including containers that serve as shipping containers of waste PCB, shall have a PCB label affixed to them.

Source: https://assist.dla.mil -- Downloaded: 2016-12-01T07:08Z
Check the source to verify that this is the current version before use.

5.5.9 Hazardous chemical warning label. Hazardous materials shall require a chemical warning label as specified in Title 29 CFR 1910.1200, Hazard Communication Standard. When the manufacturer's warning label has been removed or obliterated, or if the product is poured from one container into another, the DoD standard hazard warning label (DD Form 2521 or DD Form 2522 (smaller version)) shall be applied to the unit container. The warning labels are available in the CD-ROM version of the Hazardous Materials Information System (HMIS). If a container includes more than one unit pack, such as a container of six aerosol cans that have a unit issue of "one each", then the warning label shall not be applied to the individual unit packs (each aerosol can) that comprise the container until the container itself is opened.

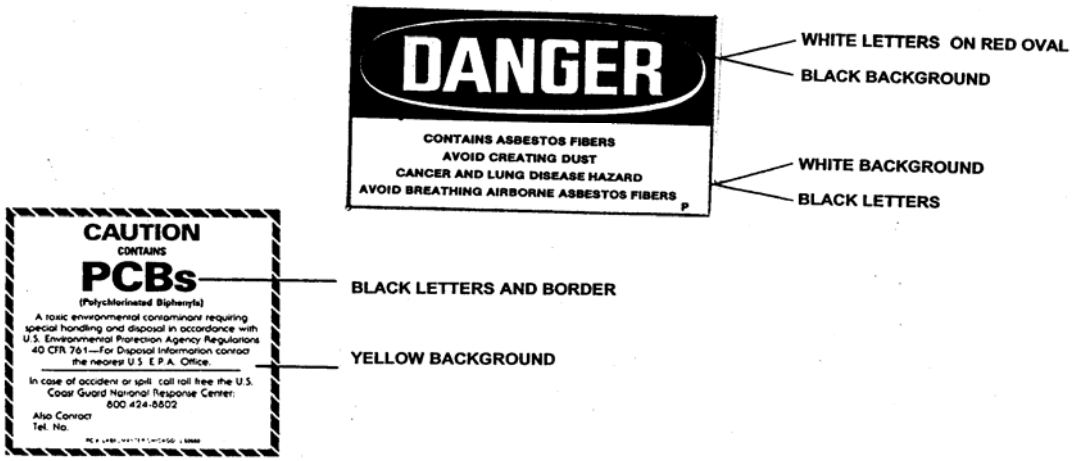

FIGURE 43. Asbestos and PCB HAZMAT labels.

5.5.10 Kits containing HAZMAT. Kits that contain hazardous components in small quantities such as adhesives, solvents, inks, paints, and other flammable liquids, or chemical kits as defined by Title 49 CFR, shall be marked and labeled in accordance with the requirements of Title 49 CFR and the applicable international document (e.g., ICAO, IMO, etc.). When one or more components in a kit are classified as a HAZMAT, the container shall be marked and labeled as specified in 5.5.2. The UN performance specification (certification) markings are not required when the individual kits meet the requirements of Title 49 CFR, 173.4, and the applicable modal requirements.

5.5.11 Radioactive material marking and labeling requirements. Containers of radioactive materials prepared for shipment shall be marked and labeled in accordance with applicable sections of Title 49 CFR and the applicable international document (e.g., ICAO Technical Instructions, IMDG Code, etc.). The applicable radioactive HAZMAT classification warning labels shall be applied on two opposite sides of the shipping container for domestic and international shipments. The applied radioactive label shall have the following information entered in the blank spaces in accordance with Title 49 CFR:

Source: https://assist.dla.mil -- Downloaded: 2016-12-01T07:08Z
Check the source to verify that this is the current version before use.

a. Contents. The name of the radionuclides.

b. Number of becquerels, expressed in appropriate becquerel units.

c. Transport index. A dimensionless number (rounded up to the first decimal place) which designates a degree of control to be exercised by the carrier during transportation. It applies to radioactive materials requiring radioactive II or III labels only.

5.5.11.1 Nuclear Regulatory Commission (NRC) interior/storage container label (see Figure 44). Containers of radioactive materials in storage shall be labeled in accordance with Title 10 CFR (see 5.5.11.4 for exceptions). When a container of radioactive material that has the labeled as specified in Title 49 CFR, the NRC label shall be removed prior to shipment to preclude any confusion for personnel transporting or receiving the container. Once the container is received, the proper NRC label must again be affixed to the container. Exceptions to the use of the NRC interior/storage container label are contained in 5.5.11.4. These interior/storage container labels may be either locally produced or procured. However, they must contain all the information required for each radioactive material. The NRC labels shall be applied to the identification-marked side of the unit pack or intermediate container and shall bear the radiation caution symbol and the words "CAUTION: RADIOACTIVE MATERIAL" or the words "DANGER: RADIOACTIVE MATERIAL," as appropriate. They shall also include relevant information such as radiation levels, kinds of material, estimate of activity, estimated activity date, and mass enrichment. The label size shall be at least 2 by 2 inches but may be larger to accommodate larger packages.

5.5.11.2 Radioactive materials requiring an NRC label. Any commodity or item containing radioactive material in excess of the amounts shown in Title 10 CFR, part 20, appendix C, require an NRC label. Radionuclides other than those listed in Title 10 CFR or mixtures of beta emitters of unknown composition also require an NRC label.

5.5.11.3 Transportation of radioactive materials. Shipping containers of radioactive material shall be marked and labeled as specified in Title 49 CFR for domestic shipments, applicable international documents such as the ICAO or IMO for international shipments, or the AFMAN 24-204(I)/TM 38-250/NAVSUP PUB 505/MCO P4030.19I/DLAI 4145.3/DCMAD1, CH3.4 (HM24) for military air shipments.

5.5.11.4 Exceptions to the use of radioactive material labels. When determining the appropriate radioactive material labels to be applied to containers in storage and to those being prepared for shipment, the following exception data must be considered. The NRC interior/storage container label is not required for limited quantities of radioactive materials, devices, and low specific activity radioactive devices specified in Title 49 CFR, part 173; materials that are processed in accordance with the general license provision of Title 10 CFR, parts 31 and 40; when exempted by the provisions of Title 10 CFR; when alternate markings are authorized by the NRC in a specific license; or when materials are otherwise exempted by Federal regulations. Any outer package that contains radioactive material need not be labeled in accordance with the provisions

Source: https://assist.dla.mil -- Downloaded: 2016-12-01T07:08Z
Check the source to verify that this is the current version before use.

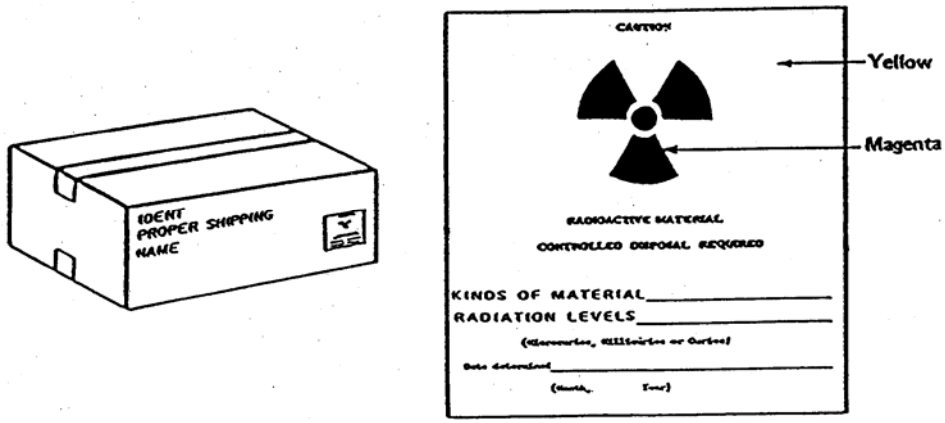

FIGURE 44. NRC interior/storage container label.

in Title 10 CFR, part 20, if the package is in transport or is ready for transport, and the packaging/ labeling/marking is in accordance with the DOT regulations (i.e., Title 49 CFR, part 173). Radioactive hazardous warning labels are not required for manufacturing or processing equipment such as nuclear reactors, their components, piping, and tanks or when packages are exempt from DOT labeling under Title 49 CFR, 173.421, 173.422, 173.424, or 173.425; when specific exemptions are granted by DOT; and as specified in AFMAN 24-204(I)/TM 38-250/ NAVSUP PUB 505/MCO P4030.19I/DLAI 4145.3/DCMAD1, CH3.4 (HM24).

5.6 Ammunition and explosives. General requirements for markings, marking materials, and methods are in 5.1, with the exception of 5.1.2. For DD Form 250 requirements see 5.3.1.2 and for the DD Form 1348-1A see 5.3.2 and 5.4.

5.6.1 Identification markings on unit packs, intermediate containers, and unpacked items. The following identification markings shall be placed on unit packs, intermediate containers, and unpacked items:

a. NSN/NATO stock number. When a DoD Identification Code (DoDIC) is specified, it shall be placed on the same line as the NSN/NATO stock number. When no NSN/NATO stock number is available, a management control number or part number/manufacturer (PN/MFR) shall be used.

b. DoDIC/NALC. Positioned on the same line as the NSN/NATO stock number.

c. Quantity/Unit of issue (UI). The UI is only marked when it is other than each. The quantity always precedes the item description on the same line that the description marking begins.

d. Item description. The item description may be marked on more than one line if required due to space limitations.

Source: https://assist.dla.mil -- Downloaded: 2016-12-01T07:08Z
Check the source to verify that this is the current version before use.

e. Lot number and serial number (when serial number is assigned). The word "LOT" shall precede the lot number and "SER" shall precede the serial number.

NOTE: Words such as "NSN/NATO Stock Number", "Item Description" and "Quantity" shall not be included as part of the identification markings. Markings shall be located on one long side of the box with NSN/NATO Stock Number occupying the first line. If an inner pack consists of a box or boxes within a barrier bag, both the boxes and bag shall be marked unless the bag is transparent.

5.6.2 Identification markings on exterior containers (see Figures 45 and 46). Exterior container markings shall include all the information marked on the inner container and the following additional markings:

a. Weight. The capital letters "WT" shall precede the numerical gross weight in pounds, rounded to the next whole pound.

b. Proper shipping name (PSN) and United Nations (UN) Identification Number (or North American (NA) numbers) shall be marked on the package in a clear area away from any other box markings. For cylindrical containers, the PSN/UN number shall be marked length wise on the container and separated from all other markings. The proper PSN/UN number shall be as shown in the Joint Hazard Classification System (JHCS) for the specific NSN being packaged or as assigned by a proper classification authority. It shall be noted that NA numbers are not authorized for international shipments. For both domestic and international shipments, PSNs for N.O.S. items must be followed by a technical name in parentheses. The PSN is required even though it may be identical to the item description.

c. Special markings. Special precautionary markings and required HAZMAT labels for the commodity described by the PSN will be applied.

d. DoDIC/NALC and lot number (end of container or container rims). Both ends of rectangular containers shall be marked with the DoDIC/NALC of the item being packed and the appropriate lot number. The lot number on the box ends shall not be preceded by the word "LOT" or underlined. The DoDIC/NALC shall be marked on the inside rim of the cover end of cylindrical containers. The lot number shall not be preceded by the word "LOT."

e. Lot number and serial number (side of container). The lower most marking on the package side containing the item nomenclature shall be the ammunition lot number. The lot number shall be preceded by the word "LOT" and shall be underlined with a solid line approximately 1/8 inch thick. If a serial number is required for the item(s) the word SER and the specific number(s) shall be marked above the LOT number.

Source: https://assist.dla.mil -- Downloaded: 2016-12-01T07:08Z
Check the source to verify that this is the current version before use.

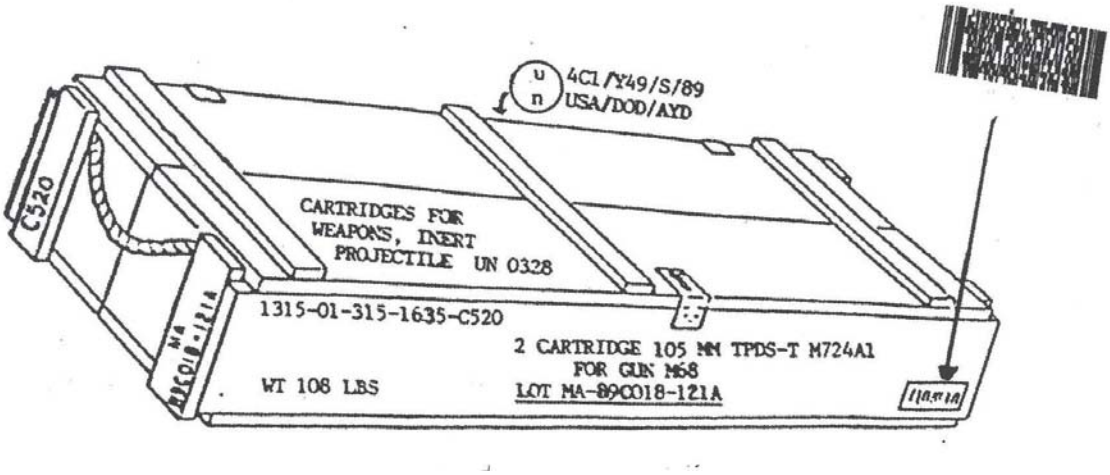

FIGURE 45. Identification markings and the placement of identification bar code labels on exterior rectangular containers.

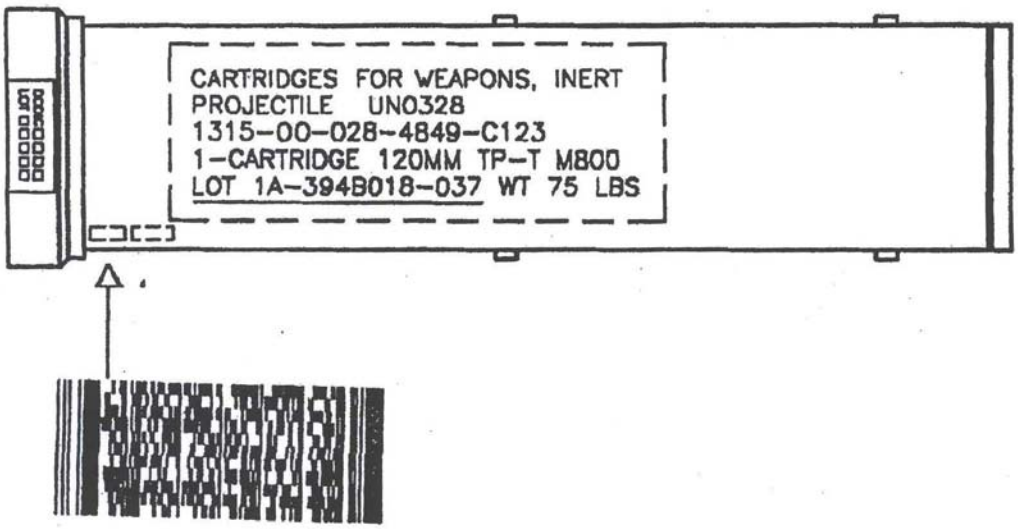

FIGURE 46. Identification markings and the placement of identification bar code labels for exterior cylindrical containers.

Source: https://assist.dla.mil -- Downloaded: 2016-12-01T07:08Z
Check the source to verify that this is the current version before use.

f. UN performance specification (certification) markings. The appropriate UN symbol as specified by the cognizant design activity in the contract or on the drawing shall be marked on the side of the container that is opposite the identification- marked side for both rectangular and cylindrical containers. If the exterior container is an over-pack containing UN performance specification (certification) marked and certified inner containers, the following marking shall be placed on the container in lieu of the UN certification markings: "OVERPACK." This marking, however, is not sufficient for combination packages consisting of over-packed inner packagings which contain liquids and are transported by military aircraft. For military air shipments of applicable HAZMAT liquids, the outer container shall be marked with the words "AIR ELIGIBLE" to indicate that either the inner receptacles or the outer container meet internal pressure requirements for air eligibility. Any other special precautionary markings and hazardous materials (HAZMAT) labels required by the appropriate regulation for the commodity described by the PSN will be applied (see 5.5).

g. Nose end marking is required for rocket ammunition and white phosphorus "WP" Smoke Artillery Ammunition. The rocket nose or artillery fuze end of the container must be identified with the marking "NOSE END." For rectangular boxes the end or edge of the box top will be marked "NOSE END" to indicate the ammunition position. Marking may be placed on either end of the box to coincide with ammunition position.

h. DOT Special Permit (SP) Numbers. If a DOT-SP number is assigned to a packaged item, it shall be plainly and durably marked "DOT-SP" followed by the specific exemption number assigned. Unless otherwise specified, rectangular containers shall have the "DOT-SP" marking on a separate line from the PSN/ID number markings.

i. Special markings. Other special markings that are required to be marked on the package shall be provided for in the contract or by detailed drawings. Examples include special orientation temperature limit, NATO standardization, Net Explosive Weight (NET) for air shipments, and center of balance markings. Unless otherwise specified, these markings shall be placed in a conspicuous location on the identification marked side of the package where they will not interfere with other markings.

j. Class 1 (explosive) materials owned by DoD and packaged prior to January 1, 1990 will be declared "government-owned dangerous goods packaged prior to January 1, 1990" on the shipping papers and need not be remarked.

5.6.3 Identification markings on empty containers. Containers inspected and certified as empty that are shipped to contractors or depots will be marked with the word "EMPTY." The old munitions item identification and DOT markings will be completely obliterated, unless the containers are being retained for reuse. Care should be taken not to obliterate the container markings; i.e., container NSN, part number, and/or nomenclature. The word "EMPTY" will be

Source: https://assist.dla.mil -- Downloaded: 2016-12-01T07:08Z
Check the source to verify that this is the current version before use.

stenciled or printed on the upper half of the container on the same side that had the old identification of contents listed. A decal (EMPTY) may be used if space is available. The container NSN and nomenclature will be applied, if not already present. Each container will contain a certificate of clearance. The condition code will be annotated on turn-in/shipping documents and the appropriate DD Form 1500 series tags/labels (see 5.2.21) will be attached to the outside of containers that are in other than condition code A. Due to sheer volume and cost effectiveness, empty containers destined for a Defense Reutilization and Marketing Office (DRMO), specifically designated and designed for containment of small arms ammunition (.50-Cal and below), are not subject to the obliteration requirement, but are subject to written certification on the disposal turn-in document that they are empty and free of explosive/energetic material.

5.6.4 Identification markings on unit load pallets (see Figure 47). The identification markings on palletized unit loads of ammunition shall include the following and be applied as follows:

5.6.4.1 Content of unit load identification markings.

a. NSN.

b. DoDIC/NALC.

c. Lot number.

d. Quantity.

(1) By lot (if more than one lot).

(2) Total quantity (if one lot).

e. Item description.

f. Gross weight.

g. PSN and UN Identification Number.

h. UN certification markings.

5.6.4.2 Application of identification markings.

a. Unit loads.

(1) Unit loads require the addition of only the identification marking that is not visible on the boxes. This additional marking is normally limited to quantity and partial nomenclature

Source: https://assist.dla.mil -- Downloaded: 2016-12-01T07:08Z
Check the source to verify that this is the current version before use.

such as 100 grenades or 30 cartridges, gross weight of the unit load, applicable mixed lot identification, and any light box/empty box data (quantity per box or number of empty boxes). For palletized unit loads 10 cubic feet and over, additional identification markings shall be placed on the end of the load adjacent to the identification marked side.

(2) Unless otherwise specified, unit loads may have one or more boxes turned to present a blank surface for marking. Marking shall be applied as prescribed in section 5 herein and shall be in largest practical lettering. Waterproof marking boards may be used when it is impossible to obtain a blank surface for marking. Approval must be obtained by the procuring command prior to using marking boards.

(3) Boxes which must have all nose ends pointed in the same direction such as rockets and white phosphorus (WP) rounds shall not be turned.

(4) When a unit load is configured in such a way that the box tops are turned inward on the load, the top layer shall be turned top out to permit the PSN and identification number to be visible. When it is not practical to turn the entire top layer, two diagonal corner boxes on the top layer shall be turned to expose the PSN and identification number.

(5) UN performance specification (certification) markings shall also be exposed on at least one place on the unit load.

(6) Unitized or palletized break bulk shipments by cargo ship under charter to DoD may be shipped with a single label per unit load. However, when the logistics flow of material is unknown, general labeling requirements shall be met.

(7) All OCONUS shipments (except those in intermodal containers) require that at least one hazard warning label be affixed to each unit load of palletized cargo or to each exterior package of loose cargo in accordance with CFR Title 49 and the applicable international modal document requirements.

(8) The marking and labeling requirements imposed by foreign Governments shall be observed as prescribed by the service directing the shipment.

b. Unit loads of unpackaged ammunition.

(1) Unit loads of otherwise unpackaged ammunition, such as separate loading projectiles, require addition of only those identification markings that are not visible on the

Source: https://assist.dla.mil -- Downloaded: 2016-12-01T07:08Z
Check the source to verify that this is the current version before use.

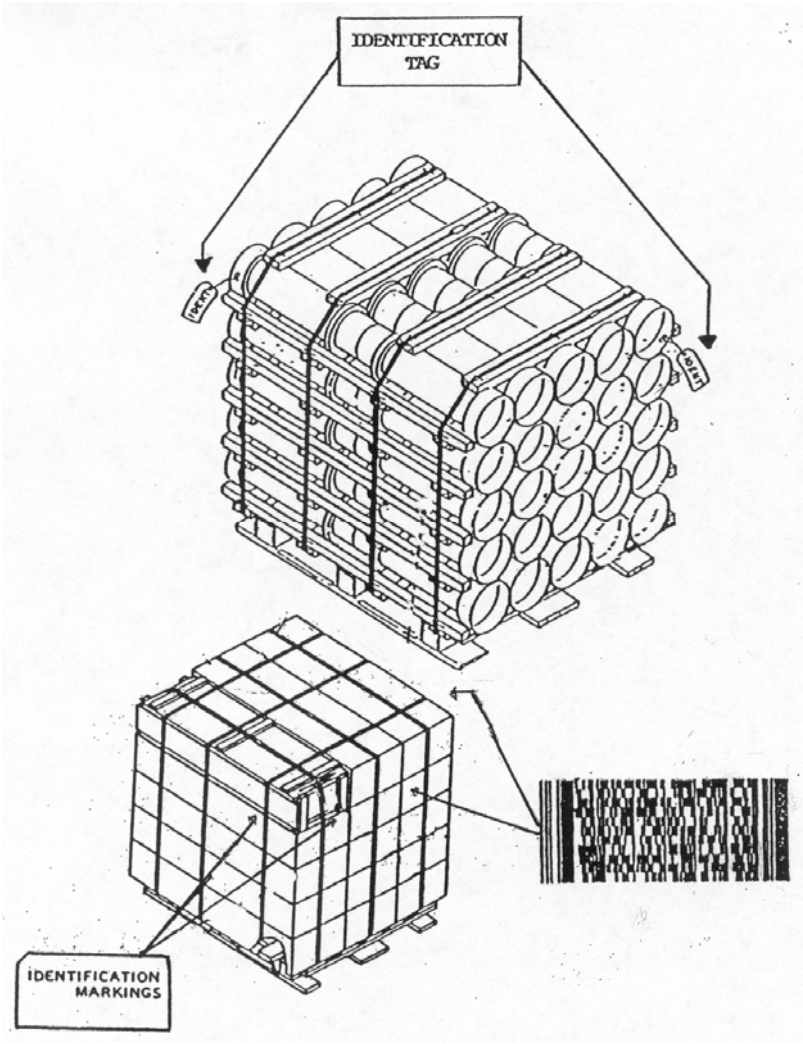

FIGURE 47. Examples of unit load identification and identification bar code markings.

projectiles. Any additional markings are normally limited to quantity, nomenclature, gross weight, and mixed lot identification, including quantity per lot. Markings may be applied directly to the pallet by stenciling, embossing, stamping, or machine printing. Tags may be used when the markings cannot be applied directly to the pallet load.

(2) The location and content of identification markings shall be specified on the ammunition packaging and marking drawings for separate loading projectiles.

Source: https://assist.dla.mil -- Downloaded: 2016-12-01T07:08Z
Check the source to verify that this is the current version before use.

c. Unit loads of cylindrical containers.

(1) Unit loads of cylindrical metal containers such as propelling charges, complete rounds, etc., shall have additional markings applied diagonally at opposite ends of the upper layer of the load by waterproof tag (see 5.1.3), label (see 5.1.2) or stamping in a contrasting color (see 5.1.1.4).

(2) Unit loads identification markings shall include gross weight, quantity, mixed lot and empty/light container identification.

(3) Containers shall be positioned so that the proper shipping name and UN serial number are visible on at least one container on one side of the unit load. The orientation of the containers specified in the unitized drawing shall be followed.

d. Unit loads comprised of multiple lots.

(1) Unit loads of ammunition and explosives comprised of more than one lot shall be marked with the appropriate lot numbers. In addition, the lot number and quantity of each lot in unit loads of mixed lots shall be listed on a plain white label or tag, as applicable, and shall be placed adjacent to other identification markings.

(2) The maximum size of the label or tag shall be 4 by 6 inches and the lettering shall be not less than ¼ inch in height.

e. Full carload or full truckload shipments. Packages of military ammunition and explosives shipped by or on behalf of DoD in freight container loads, carloads, or truckloads (including exclusive use) which are loaded and unloaded by the shipper or by DoD, are exempt from labeling requirements.

f. Empty/Light (Lite) Box/Light (Lite) Load Markings. When a package contains less ammunition or explosives than the package is designed to contain or when an empty package is used to square a unit load, the box must be specifically marked as follows:

(1) An empty/light (lite) box/light (lite) load, if applicable, shall be identified as such by marking or stenciling the words "EMPTY," or “LIGHT BOX," (“LITE BOX”) in a contrasting orange paint scheme, on the identification side, space permitting, in the largest practical size letters. An additional marking or stenciling must be placed on the top, side and end of the container.

(2) Unitized loads. When the bottom, sides or end surfaces of an empty or light (lite) box is visible within a unit load, then these surfaces must also be marked or stenciled with the words "EMPTY" or "LIGHT BOX," (“LITE BOX”) in a contrasting orange paint scheme, in the largest practical size letters. In addition, a unit load containing empty or

Source: https://assist.dla.mil -- Downloaded: 2016-12-01T07:08Z
Check the source to verify that this is the current version before use.

light (lite) boxes shall be identified by quantity per box and/or number of empty boxes, on the pallet identification markings side.

(3) Cylindrical containers. An empty/light (lite) box/light (lite) load cylinders shall be identified as such by marking or stenciling the words "EMPTY" or "LIGHT BOX" ("LITE BOX") in a contrasting orange paint scheme on the bottom, opposite sides and the cover or cover latch, of the cylinder.

(4) In a general shipping situation, there is only one LIGHT BOX (LITE BOX) per lot, per condition code, per structure. However, additional LIGHT BOXES (LITE BOXES) may be required for items issued to custody accounts. LIGHT BOX (LITE BOX) markings are not required for Ammunition Disposition Request (ADR) munitions or munitions in ready explosive facilities. Nonstandard munitions boxes do not require LIGHT BOX (LITE BOX) markings.

(5) Markings applied to containers need not be re-accomplished to correct deficiencies in size, location, or space, unless required for shipment.

NOTE: At the Services' discretion, empty/light (lite) box/light (lite) load boxes may be identified as such by painting the entire box in a contrasting orange paint scheme. Moreover, regardless of container size (cube) and the Services' preferred method, the contrasting orange paint scheme is readily identifiable to empty/light (lite) box/light (lite) loads.

5.6.5 Identification bar code symbol marking requirements (see Figures 45, 46 and 47). The application of a 2D (PDF417) symbol is required for identification markings on ammunition and explosive containers and palletized unit loads. Use of the 2D (PDF417) symbol with human readable information is mandatory. In addition to all other markings, every exterior container and palletized unit load shall have identification bar code labels or markings applied as described in the following subparagraphs. Identification bar code markings shall be applied by means of a label. Unless otherwise specified, identification bar code labels shall meet the following requirements:

5.6.5.1 Identification bar code label specifications. Labels shall meet the requirements for Grade A, Style 2, Composition (b) labels as specified in MIL-PRF-61002. The performance requirements for solvent and detergent resistance are not required. The label should be the pressure sensitive adhesive type. Additional performance requirements that must be met are as follows:

Source: https://assist.dla.mil -- Downloaded: 2016-12-01T07:08Z
Check the source to verify that this is the current version before use.

a. The label material will be a minimum of 6.8 mil thick (7 mil nominal). Material will provide a minimum of 42 lbs/1-inch width tensile strength at break when tested in accordance with ASTM D 882. Material will provide a minimum of 6600 grams (66 Newton's) of puncture – propagation tear resistance when tested in accordance with ASTM D 2582.

b. Each label shall be no greater than 4 inches by 4 inches square (see Figure 48). The size of the labels may be commensurate with the quantity of encoded data and the human readable information. Format is not mandated but the information should be grouped by NSN or part number and then by serial number for each lot number, if applicable. Figure 49 shows the same information printed on a set of smaller labels.

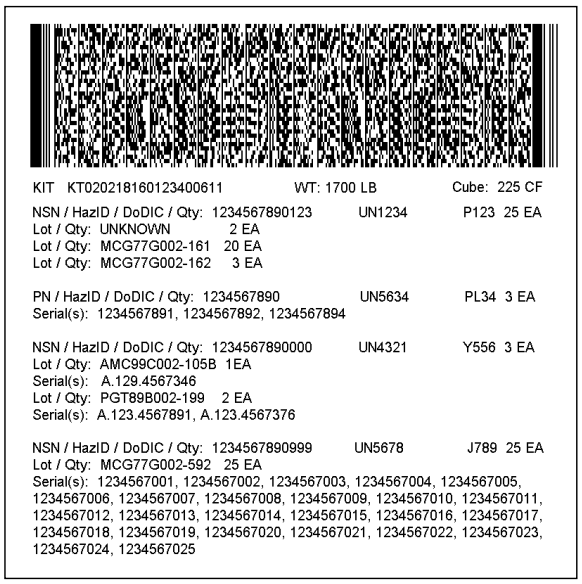

FIGURE 48. Ammunition and explosive identification bar code label. Expanded 2D (PDF417) symbol (18 data columns) contains 709 characters. (Actual size is 4 inches by 4 inches).

5.6.5.2 Identification bar code symbol data structure. The identification bar code symbol shall be formatted and printed as noted in the following paragraphs and Table IV of this standard, with reference to MHIA MH10.8.2 and ISO/IEC 15434. The 2D (PDF417) symbol will contain two types of information, generic data that is relevant to the entire package/load entity and a set of data for each stock numbered or part numbered asset. Data structure requirements are noted in Table IV-E.

a. Package and Unit Load generic information encoded in the identification bar code symbol.

(1) Label Traceability Code. A unique traceability code will be generated during the printing process and encoded for each 2D (PDF417) symbol label. The purpose of the traceability code is to preclude multiple scans of the same symbol during inventories and to identify the type of package/load entity.

Source: https://assist.dla.mil -- Downloaded: 2016-12-01T07:08Z
Check the source to verify that this is the current version before use.

(a) The following is the format for the traceability code: UMYYMMDDhhmmssssRRNX for: UM=unit of measure, YY=year, MM=month, DD=date, hh=hour, mm=minute, ssss=second and hundredths of a second, RR=2 digit random number, NX=label N of X labels. No more than one label should be generated each hundredth of a second for this traceability code format. The random number serves to minimize the potential for two identical traceability codes being generated at the exact same time.

(b) An alternate for "ssss" in the traceability code is: ssss = a second (00 to 59) and the label number generated during that second (00 to 99) (i.e. "ssss" could equal 0000 to 5999). No more than 100 labels may be generated per second using this format.

(c) When multiple labels are required to mark a single entity, the first 18 characters of the traceability code will be common to each label set and the final two characters identify each label, e.g., 1 of 3, 2 of 3, 3 of 3. If only a single label, use 1 of 1 (see Figure 48).

(d) See Table IV-E for unit of measure codes.

(2) Weight with unit of measure. Deleted.

(3) Cube with unit of measure. Deleted.

b. Data elements encoded for each National Stock Number (NSN) or Part Number (PN) data set. To identify the beginning of each data set, the data set begins with a data identifier (DI) for the national stock number (DI N) or part number (DI 1P) that is common to the data set. See Table IV and IV-E for an explanation of data identifiers and 2D (PDF417) symbol encoding requirements.

(1) National Stock Number. Unless otherwise specified, the NSN shall be encoded. If the NSN is not encoded, the part number must be encoded.

(2) Part Number. The part number shall only be encoded when the NSN is not available.

(3) Department of Defense Identification Code (DoDIC)/NALC encoded if applicable.

(4) The Quantity/Unit of Issue (UI). The quantity and UI shall be encoded within the respective data set for each NSN or PN identified asset in the data set and for each lot number and/or unknown lot number within the data set, if available. See example in Table IV-E for data sets and UI codes.

Source: https://assist.dla.mil -- Downloaded: 2016-12-01T07:08Z
Check the source to verify that this is the current version before use.

(5) Lot Number(s). The lot number, if available, including dashes shall be encoded as specified in the contract. For older ammunition, the lot number shall be encoded exactly as it appears on applicable reporting records or as it appears on the exterior container. Multiple lot numbers, beginning with a DI 1T for each lot number, shall be included within the NSN or PN data set as applicable. If a lot number cannot be determined or read for one or multiple assets, "UNKNOWN" shall be encoded one time within the data set. If a lot number is not assigned, the DI for that lot is blank and shall not be encoded.

(6) Serial Number. If a serial number(s) is assigned to an asset, it shall be encoded. If a serial number is related to a lot number, the serial number shall be encoded within the respective lot number data set. If a serial number is not related to a lot number, the serial number shall be encoded with the respective NSN or PN data set. Multiple serial numbers, beginning with DIs for each serial number may be included within a data set.

(7) UN code. Deleted.

c. Additional data elements encoded as a user option. Additional data elements may be encoded in the 2D (PDF417) symbol using MHIA MH10.8.2 data identifiers. The use of data identifiers not listed in Table IV-E must be coordinated with the Logistics AIT Office (USTRANSCOM J5/4-I) to ensure conflicting information is not encoded.

(1) Weight with unit of measure.
(2) Cube with unit of measure.
(3) UN code. UN hazardous identification number for the asset.

5.6.5.3 Identification bar code human readable information. Human readable information shall be printed in close proximity to the 2D (PDF417) symbol and should consist of HRI text translated from the encoded 2D (PDF417) symbol data.

a. All encoded data elements shall be printed as human readable information.

(1) The human readable information is not a substitute for the identification markings but serves to ensure the correct 2D (PDF417) symbol, used primarily for inventory purposes, is attached to the matching package/load unit.

(2) The printed HRI data shall be a literal interpretation of the data encoded in the 2D (PDF417) symbol and will not include encoded data identifiers or element separators. The 2D (PDF417) symbol HRI for each data element, except for the label traceability code, must be preceded by a representative data title from Table IV for each DI. The unit of measure suffix for cube and weight may be translated for clarity.

Source: https://assist.dla.mil -- Downloaded: 2016-12-01T07:08Z
Check the source to verify that this is the current version before use.

(3) The label traceability code will be translated and printed as follows: the first two characters for the unit of measure (UM) will be translated and printed; the 20 character traceability code will be printed, for entities with multiple labels, the last two characters (NX) will be translated and printed on each label to show the label set relationship, e.g., 1 of 2, 2 of 2.

b. The human readable information shall be printed outside the quiet zone of the 2D (PDF417) symbol. The human readable information text shall be no smaller than 10 lines per 1 inch (approximately a 7 point font).

5.6.5.4 Use of multiple labels for large data requirements (see Figure 49). If a 2D (PDF417) symbol and its printed human readable information contain more information than can be printed on one label, additional 2D (PDF417) symbol labels may be affixed next to each other to show the additional information. Each label in the set shall have a unique label serial number and shall be marked consecutively as "1 of X, 2 of X, 3 of X, etc" where X is the total number of labels in the set. Each 2D (PDF417) symbol in the set will contain identical generic information such as weight and cube. The first 18 characters and the 20th character of the traceability code may also be identical. The information for an NSN, part number, or lot number data set may span across labels but the "continued" data set must contain the same common elements; however, the quantity of items must be unique to each label. Extra large 2D (PDF417) symbols will not be used for this purpose.

5.6.5.5 Location and application of the identification bar code symbol label.

a. The identification bar code symbol label for a rectangular container shall be placed in the lower right quadrant of the box side containing the descriptive nomenclature, as shown in Figure 45. If there is insufficient space on the lower right quadrant, the label shall be placed in the most convenient place on the marked side of the container. A pressure sensitive label shall be affixed to wood containers by stapling both ends of the label to the wood. Any commercial-type staple may be used as long as it is not placed within the 2D (PDF417) symbol or within the quiet zone of the 2D (PDF417) symbol. On other than wood surfaces, the label shall be affixed only after the surface to be labeled is clean and dry. On wire-bound boxes, the label shall be affixed so that it is at least ¼ inch from all wires and staples.

Source: https://assist.dla.mil -- Downloaded: 2016-12-01T07:08Z
Check the source to verify that this is the current version before use.

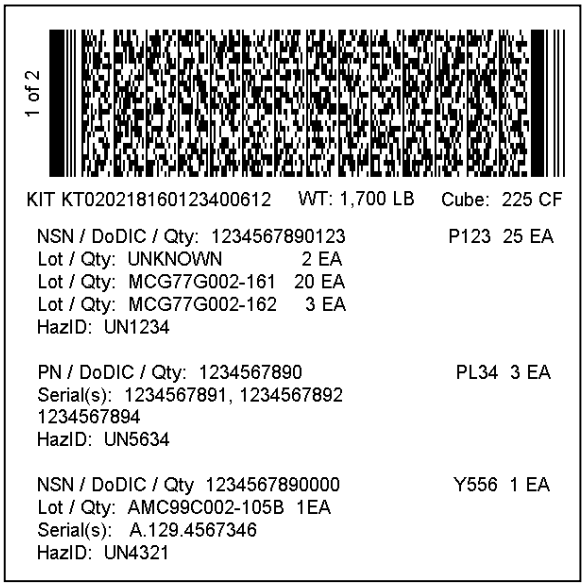

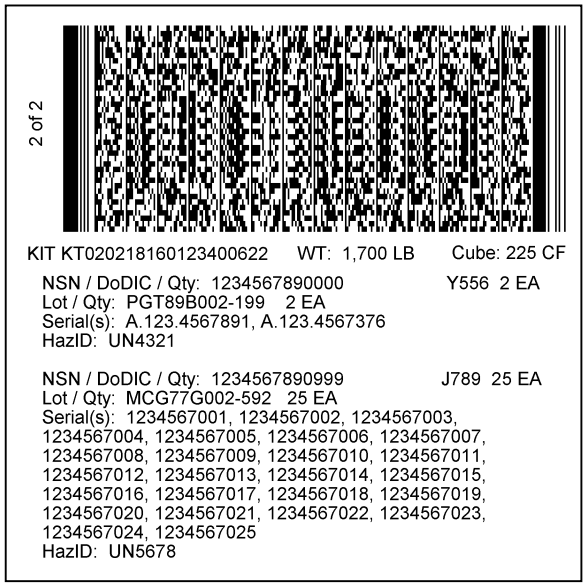

FIGURE 49. Examples of multiple identification bar code labels for ammunition and explosives with data from Table IV. (Actual size is 3 inches by 3 inches).

b. The cylindrical container identification bar code symbol label shall be applied immediately to the left of the identification markings and shall always be placed on a relatively flat surface along the container length as shown in Figure 46. Surfaces to be labeled shall be clean and dry before the label is affixed.

c. The unit load identification 2D (PDF417) bar code symbol label shall be applied on the upper right quadrant on the short dimension of the unit load, unless otherwise shown in Figure 47. The label shall be applied on one of the flat sides or front of the pallet and another one on the end or side of the pallet, unless otherwise specified in palletized unit load marking drawings.

5.6.6 Address markings (see Figure 2a). Address markings shall be accomplished and applied as specified in 4.2.

Source: https://assist.dla.mil -- Downloaded: 2016-12-01T07:08Z
Check the source to verify that this is the current version before use.

5.6.7 Order of precedence. In the event of a conflict between the ammunition and explosive marking requirements of this standard and the requirements of product specifications, item technical publications, or drawings, the order of precedence shall be:

a. The requirements of the drawings.

b. The requirements of item technical publications.

c. The requirements of product specifications.

d. The requirements of this standard.

6. NOTES

(This section contains information of a general or explanatory nature that may be helpful, but is not mandatory).

6.1 Intended use. This standard practice is intended for use when guidance is required for the application of military markings as prescribed herein or in contractual documents. The markings shown herein may be applied either by vendors or by Government activities.

6.2 Subject term (key word) listing.

Address
Bags
Bar code
Boxes
Code 39
Crates
Drums
Exterior container
Federal Supply Class
Identification
Intermediate container
Labels
National Stock Number
Marking
MILVAN
PDF417
Sacks
SEAVAN
Shipping
Tags
Unit pack

Source: https://assist.dla.mil -- Downloaded: 2016-12-01T07:08Z
Check the source to verify that this is the current version before use.

6.3 International interest. Certain provisions of this standard are the subject of international standardization agreements STANAG 4281, STANAG 2233, STANAG 4329, QSTAG 1152, and QSTAG 1154. When change notice, revision, or cancellation of this standard is proposed which will modify the international agreement concerned, the preparing activity will take appropriate action through international standardization channels, including departmental standardization offices, to change the agreement or make other appropriate accommodations.

6.4 Changes from previous issue. The margins of this standard are marked with vertical lines to indicate modifications generated by this change. This was done as a convenience only and the Government assumes no liability whatsoever for any inaccuracies in these notations. Bidders and contractors are cautioned to evaluate the requirements of this document based on the entire content irrespective of the marginal notations.

6.5 Sizes of forms used. Descriptions of certain forms cited for use by this standard contain specific size requirements. These forms are generally intended to be imprinted with data by computers or generated entirely by computers. The sizes listed are those that are compatible with the majority of printers associated with computer systems commonly used.

6.6 Desiccated unit pack label. The Method 50 label or package marking described in 5.2.10 is used to identify packages containing desiccant, a drying agent that is intended to alert personnel that the package will remain unopened to prevent the degradation of preservation of the item. Items packaged with desiccant must be completely reprocessed with new desiccant after opening. The color red is used to make this marking stand out from other markings, which are usually black.

6.7 Chemical agent resistant coatings (CARC). Certain military equipment is required to be painted with material that resists contamination by certain chemical agents that may be used by the enemy in wartime situations. Since no commercial equivalents are available for these compounds, and since there is no commercial need for such protection, use of specific military materials is required.

Source: https://assist.dla.mil -- Downloaded: 2016-12-01T07:08Z
Check the source to verify that this is the current version before use.

TABLE I. Supply-type Labels. Deleted.

Source: https://assist.dla.mil -- Downloaded: 2016-12-01T07:08Z
Check the source to verify that this is the current version before use.

TABLE II. Shelf-Life Codes

			Required Number of Months/Quarters Remaining Upon Receipt by the first Government activity	
Shelf-Life Period	**Type I**	**Type II**	**Months**	**Quarters**
Non-Deteriorative No Shelf-Life Applies	0 (zero)	0 (zero)	N/A	N/A
01 Month	A	N/A	25 days	N/A
02 Months	B	N/A	50 days	N/A
03 Months	C	1	75 days	N/A
04 Months	D	N/A	3	1
05 Months	E	N/A	4	1
06 Months	F	2	5	2
09 Months	G	3	8	3
12 Months (1.00-Year)	H	4	10	3
15 Months (1.25-Years)	J	N/A	13	4
18 Months (1.50-Years)	K	5	15	5
21 Months (1.75-Years)	L	N/A	18	6
24 Months (2.00-Years)	M	6	21	7
27 Months (2.25-Years)	N	N/A	23	8
30 Months (2.50-Years)	P	N/A	26	9
36 Months (3.00-Years)	Q	7	31	10
48 Months (4.00-Years)	R	8	41	14
60 Months (5.00-Years)	S	9	51	17
72 Months (6.00-Years)	I	N/A	61	20
84 Months (7.00-Years)	T	N/A	71	24
96 Months (8.00-Years)	U	N/A	82	27
Variable such as: 90, 132, 216, 228, etc. Months or any other number of months not specifically assigned.	V	N/A	77, 113, 184, 194, etc.	26, 38, 61, 65, etc.
120 Months (10-Years)	W	N/A	102	34
180 Months (15-Years)	Y	N/A	153	51
240 Months (20-Years)	Z	N/A	204	68
Shelf-Life Period Greater than 60 Months for Type II Extendible Items.	N/A	X	85 percent of number of months	85 percent of number of quarters

Source: https://assist.dla.mil -- Downloaded: 2016-12-01T07:08Z
Check the source to verify that this is the current version before use.

TABLE III. Application of Supply Condition Codes to Shelf-Life Items. Deleted.

Source: https://assist.dla.mil -- Downloaded: 2016-12-01T07:08Z
Check the source to verify that this is the current version before use.

TABLE IV

Technical Details for 2D (PDF417) Symbology

Table IV provides detailed printing instructions for the 2D (PDF417) symbol and it provides explanations for the Tables that follow.

1. Printing Instructions.

a. The 2D (PDF417) symbol used for shipping and receiving shall be printed with no more than 12 data columns in width. The use of 13 to 18 data columns is allowed for inventory or supporting documentation applications (identification marking, ammunition/explosive marking, packing list, etc) if smaller symbols cannot accommodate the increased data requirements. A 2D (PDF417) symbol includes a start pattern, a left row indicator column, one or more data columns, a right row indicator column, and a stop pattern.

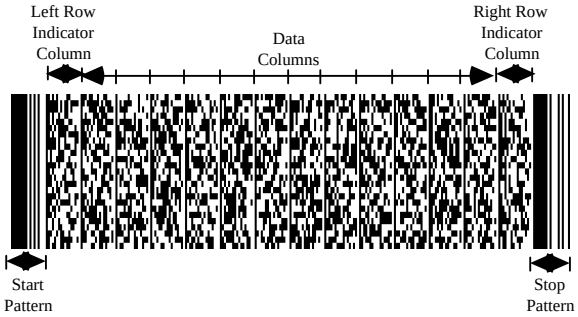

b. The symbol shall not exceed 2.4 inches (61 mm) in height to include the surrounding minimum quiet zone.

c. The symbol shall have a minimum quiet zone of 0.04 inches (1 mm) above, below, to the left, and to the right.

d. The minimum narrow element dimension (X-dimension) shall not be less than 0.01 inches (10 mils/.254 mm). For symbols up to 12 data columns, the X-dimension will not exceed 0.017 inches (17 mils/.432 mm). For 13 to 18 data columns, the X-dimension will not exceed 0.01inches.

e. The symbol shall have a minimum row height of three times the width of the narrow element (X-dimension).

f. The symbol shall use error correction level 5.

g. The start and stop bars of the symbol shall be perpendicular to the natural bottom of the label.

Source: https://assist.dla.mil -- Downloaded: 2016-12-01T07:08Z
Check the source to verify that this is the current version before use.

h. The label should be designed so that two bar codes and/or symbols are not next to each other in the same horizontal plane unless the label is wide enough to reduce the possibility of interference with successful bar code and/or symbol scanning.

i. Data identifiers which contain no information should not be printed.

j. The quality of the printed bar code shall meet a grade requirement of 2.5 (B) at the point of production when measured in accordance with ISO/IEC 15438 with a measurement aperture of 0.25 mm and an inspection wavelength of 660 ± 10 nm.

2. Table IV-A Information. Table IV-A provides data descriptions, format, and data sources for the MHIA MH10.8.2 DIs used in the 2D (PDF417) symbol and for the data element identifiers (DEI) that identify DoD unique data elements from the DTR and MILSTRIP.

a. Format 06 Data Identifiers (DIs) (Column 1) and the Format 07 Data Element Identifiers (DEIs) (Column 1) contain specified characters that define the general category or intended use of the data that follows as referenced in MHIA MH10.8.2 and as adopted by the DoD for use. See the DoD Logistics AIT Office web site, http://www.dla.mil/j-6/AIT, for the most current list of DoD adopted DIs and DEIs.

b. DoD Usage (Column 2) displays the titles and usage adopted by DoD for the respective DIs/DEIs.

c. Deleted.

d. Data Sources (Column 3) shows the most common source for the 2D (PDF417) symbol data. If a DI or DEI is used to encode data for multiple applications, several data sources may be described.

3. Tables IV-B through IV-E Information. Tables IV-B through IV-E provide the content of the data streams for generic cargo MSLs, unit move MSLs, unit pack ID and container ID 2D (PDF417) symbols, and ammunition and/or explosive identification marking 2D (PDF417) symbols, respectively.

a. Compliance Indicator (Column 1): Shows the special formatting characters associated with the ISO/IEC 15434 data format. The Compliance Indicator shall be the first three characters in the Message Header. The Compliance Indicator shall be [)> (left bracket, right parenthesis, and greater than).

b. Element Separators (Column 2), shows the separator or terminal code that is for that particular part of the data stream. The format Trailer Character (RS) will be used at the end of the Message Header (before a format series) and at the end of each format series of data (before the next series of data). The Data element Separator (GS) separates data elements within each format series of the data table. The Message Trailer (EOT) identifies the end of the message within the data stream.

Source: https://assist.dla.mil -- Downloaded: 2016-12-01T07:08Z
Check the source to verify that this is the current version before use.

c. Format Header (Column 3) is a two-digit numeric identifier “06” or “07” which identifies the rules governing the message format. It is followed by Format 06/07 data qualifiers (DIs or DEIs in Columns 4 and 5, respectively), which define data content within the message.

d. Data Field (Column 6) contains an abbreviated description of the data field. See Table IV-A for a full description.

e. Data Format Type/Length (Column 7) contains indicators of whether the data is alpha and/or numeric and the length of the actual data represented by this field (e.g. an5). A convention of “an..25” means a variable length data string of up to 25 alphanumeric characters, where “an25” means a fixed length of precisely 25 alphanumeric characters. A convention of “an13..15” means a minimum of 13 characters and a maximum of 15 characters. The plus symbol (+) is used to show concatenated data fields within a DI/DEI string. When referenced to a Note in the Data Format column, the plus symbol (+) becomes part of the data sub-string to separate different types of data that are encoded within a single field (i.e., DIs 2L, 3L, and 5L). Variable length fields are not zero-filled unless the information is extracted from an external data source that requires leading zeros. If a DI or DEI is used to encode data for multiple applications, several data formats may be described.

f. Sample Data (Column 8) contains sample data for the field indicated.

Table of Hexadecimal and Decimal Values

ASCII / ISO 646	HEX	DEC
RS	1E	30
GS	1D	29
EOT	04	04

g. Deleted.

h. The Generic Cargo MSL 2D (PDF417) symbol and the Ammunition/Explosive marking 2D (PDF417) symbol stores a repeating set of selected data at the end of the symbol format.

(1) The repeating data set for the MSL reflects what is normally marked in the linear (Code 39) bar codes or the 2D (PDF417) symbol on a DD Form 1348-1A. The data capacity restrictions of the MSL 2D (PDF417) symbol will normally limit its content to ten line items depending on the amount of MSL and TCMD data recorded. Each supply document series begins with a DI “12S” and terminates with a DI “12Q” code – if either of these two fields are blank, they must be encoded.

Source: https://assist.dla.mil -- Downloaded: 2016-12-01T07:08Z
Check the source to verify that this is the current version before use.

(2) The repeating data set for the Ammunition/Explosive 2D (PDF417) symbol reflects the quantities of stock numbered assets or part numbered assets within each package or unit load. Each repeating data set series begins with a DI "N" or DI "1P" code.

4. Data Syntax Graphic. The following graphic is an example of how MHIA MH10.8.2 DIs and DoD DEIs are used in a 2D (PDF417) symbol to depict a single shipment unit TCMD with multiple supply line items within the shipment unit.

a. The TCN document number and related TCMD data are contained in the first Format 06 block that terminates with an RS code followed by a Format 07 block that terminates with an RS code.

b. The supply line item data for specific document numbers are contained in a following Format 06 block. Data looping is required to document a multipack shipment when multiple line items exist within a single shipment unit. In this data looping structure, the order in which the line items are stored on the media (2D (PDF417) symbol) is critical to the meaning of the data. The number of supply line item documents is limited by the storage capacity of the AIT device.

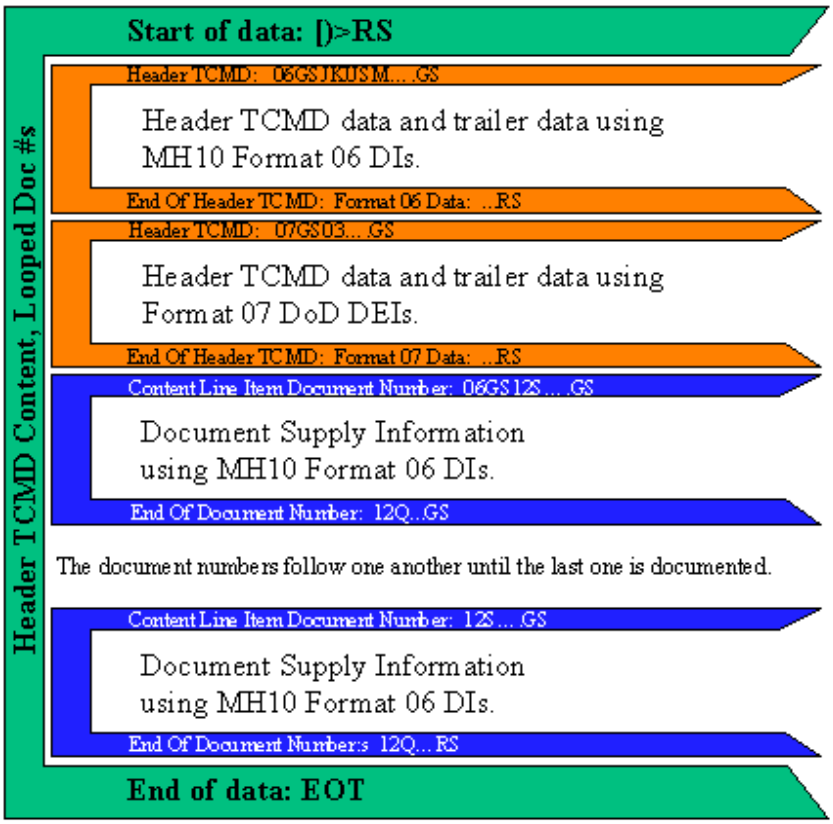

Source: https://assist.dla.mil -- Downloaded: 2016-12-01T07:08Z
Check the source to verify that this is the current version before use.

Table IV-A 2D Symbol Data Descriptions Format 06		
Format 06 Data Identifier	**DOD Usage (See Note 1)**	**Data Sources**
JKUSM	**Transportation Control Number (TCN)**	DTR Table 208-2 DTR App L DTR App M
3D	**Ship Date** - format YDDD	DTR Table 208-2
I	**Vehicle Identification Number (VIN)**	DTR Chapter 208
2K	**Bill of Lading** - number	DTR Chapter 208
4K	**Contract Line Item Number (CLIN)**	Contract
5K	**Contractor Shipment Number**	DD Form 250
8K	**Contract Number**	Contract
9K	**Transportation Account Code (TAC)**	DTR Table 208-2 DTR App M DTR App L
12K	**Personal Property Standard Carrier Alpha Code (SCAC)** - for HHG and baggage ITGBL carrier	DTR App M (TCMD T_8)
2L	**Ship To Address** – up to 5 lines of 35 characters See Note 2 and 6	DTR Table 208-2
3L	**From Address** - up to 3 lines of 35 characters See Note 2 and 6	DTR Table 208-2
5L	**Consignee Address** - up to 5 lines of 35 characters See Note 2 and 6	DTR Table 208-2
51L	**Origin Zip Code** – for SEAVAN point of origin	DTR App M (TCMD T_9, Table M-14, rp 9-14)
N	**National/NATO Stock Number (NSN) –** or stock identification elements thereof	DTR App M (TCMD T_6) DD 1348-1A
1P	**Part Number –** assigned by manufacturer	As marked
6P	Not for use: Item Identifier (TAMCN, DODIC, etc) See Format 07 DEIs for Item Identifiers	

Source: https://assist.dla.mil -- Downloaded: 2016-12-01T07:08Z
Check the source to verify that this is the current version before use.

Table IV-A 2D Symbol Data Descriptions Format 06		
Format 06 Data Identifier	**DOD Usage (See Note 1)**	**Data Sources**
10P	**Hazardous Material Code** For UN ID code marking on ammunition enter "U" followed by the 4 digit ID number. For other HAZMAT codes, see ANSI X12.3 208/209 elements as applicable. See Format 07 DEI 41/42 for TCMD UN code or North American code applications See Format 07 DEI 49 for TCMD Air Commodity/Special Handling code	As marked
2Q	**Weight** - with optional metric unit of value for generic cargo Default = pounds See Note 3	DTR Table 208-2
7Q	**Quantity and Unit of Issue (UI)**	DD 1348-1A (rp 23-29)
11Q	**Tare Weight** - with optional metric unit of value for generic cargo Default = pounds See Note 3	DTR Chapter 208
12Q	**Unit Price –** with unit of value = USD	DD 1348-1A (rp 74-80)
13Q	**Piece Number / Total Pieces** - piece n of x of pieces	DTR Table 208-2
2R	**Condition Code**	DD 1348-1A (rp 71)
4R	**DOD Identification Code (DODIC)**	DTR App M (TCMD T_6) DD 1348-1A
S	Serial Number or Code	As marked
12S	**Supply Documentation Number** – and suffix code when applicable	DD 1348-1A (rp 30-44)
13S	**Security Seal Number**	DTR App M (TCMD T_9, Table M-14)
20S	**Traceability Code/Serial Number**	As generated or marked
25S	**Unique Item Identifier (UII) –** documents as a single value the concatenated UII elements of an item unique identification (IUID) mark or the DOD IUID equivalent mark (see MIL-STD-130)	Derived from the item IUID mark
1T	**Lot/Batch Number or Traceability Number –** for a group of entities	DTR App M (TCMD T_7) DD 1348-1A

Source: https://assist.dla.mil -- Downloaded: 2016-12-01T07:08Z
Check the source to verify that this is the current version before use.

Table IV-A 2D Symbol Data Descriptions Format 06		
Format 06 Data Identifier	**DOD Usage (See Note 1)**	**Data Sources**
V	**Routing Identifier Code (RIC) – Shipping Activity** The "From" RIC for shipper	DD 1348-1A (rp 4-6)
4V	**Ocean Carrier Code –** for SEAVANs / MILVANs/ CONEX	DTR App M (TCMD T_9, Table M-14) DTR App SS
8V	**Distribution Code** – last 2 positions of DOD Distribution Code used for DD Form 1348-1A linear bar code	DD 1348-1A (rp 55-56)
17V	**Commercial and Government Entity Code (CAGE) –** The Consignor CAGE code for an MSL or the CAGE code for a container ID mark of the company awarded the contract for the item being shipped..	As marked.

Table IV-A 2D Symbol Data Descriptions Format 07		
Format 07 Data Element Identifier	**DOD Usage (See Note 1)**	**Data Sources**
00	Reserved – for future assignment	
01	Reserved – for future assignment	
02	Reserved – for future assignment	
03	**Project Code**	DD 1348-1A (rp 57-59) DTR Table 208-2 DTR App M
04	**Unit Line Number (ULN)** – for unit move MSL	DTR Chapter 208 DTR App M (TCMD T_9, Table M-13, rp 58-64)
05	**Unit Identification Code (UIC)** – for unit move MSL	DTR Chapter 208
06	**Bumper Number**	DTR Chapter 208 DTR App M (TCMD T_9, Table M-18)
07	**Not for use: Shipment Number**	

Source: https://assist.dla.mil -- Downloaded: 2016-12-01T07:08Z
Check the source to verify that this is the current version before use.

Table IV-A 2D Symbol Data Descriptions Format 07		
Format 07 Data Element Identifier	**DOD Usage (See Note 1)**	**Data Sources**
08	**Not for use: Unit Name – for ship to location** **See Format 06 DI 2L or 5L**	
09	**Unit Equipment Description** – for unit move	DTR Chapter 208
10	**Model Identifier** – for equipment or vehicle identifier	DTR Chapter 208 DTR App M (TCMD T_5)
11	Not for use: Home Station – for unit move	
12	**Cube** – with optional metric unit of value for generic cargo Default = cubic feet See Note 3	DTR Table 208-2
13	Not for use: Item Weight – for each piece	
14	Not for use: Actual Load Weight – for complete load	
15	**Water Commodity/Special Handling Codes**	DTR Chapter 208 DTR App M DTR App KK DTR App LL
16	Not for use: JCS Cargo Category Code for unit move	
17	Not for use: UTC – Unit Type Code for unit move	
18	**Length** – with optional metric unit of value for generic cargo Default = inches See Note 3	DTR Chapter 208 DTR App M
19	**Width** – with optional metric unit of value for generic cargo Default = inches See Note 3	DTR Chapter 208 DTR App M
20	**Height** – with optional metric unit of value for generic cargo Default = inches See Note 3	DTR Chapter 208 DTR App M
21	**Pallet Identifier**	DTR App M (TCMD T-9, Table M-22)
22	**Reserved – for future assignment**	

Source: https://assist.dla.mil -- Downloaded: 2016-12-01T07:08Z
Check the source to verify that this is the current version before use.

Table IV-A 2D Symbol Data Descriptions Format 07		
Format 07 Data Element Identifier	**DOD Usage (See Note 1)**	**Data Sources**
23	**Air Dimension Code**	DTR App M DTR App BB
24	**Container Number Code** – last 5 digits of van and other container numbers	DTR App M (TCMD T_1/2/3/4, rp 4-8) DTR App QQ
25	**Port of Embarkation (POE) Code**	DTR Table 208-2 DTR App M DTR App CC DTR App MM
26	**Port of Debarkation (POD) Code**	DTR Table 208-2 DTR App M DTR App CC DTR App MM
27	**Consignee DOD Activity Address Code (DODAAC)** – for the receiving ultimate consignee or mark for consignee	DD 1348-1A DTR Table 208-2 DTR App M
28	**Transportation Priority** – 1 through 4	DTR Table 208-2 DTR App M DTR Para 203 B.3
29	**Consignor DOD Activity Address Code (DODAAC)** – for the shipper or loading activity	DTR Table 208-2 DTR App M
30	**Mode/Method Code** – of shipment	DTR App M DTR App GG
31	Not for use: Required Port Delivery Date (RPDD)	
32	**Required Delivery Date (RDD)** – may reflect RDD in DDD format or special codes, e.g., expedited shipment and handling (Code 999), Not Mission Capable Supply (NMCS) (Code N__), etc.	DD 1348-1A (rp 62-64) DTR Table 208-2 DTR App M
33	Not for use: Special Priority	
34	**TCMD/Manifest Doc ID Code – Document Identifier Code (DIC)**	DTR App M DTR App DD
35	**Free Text –** Comment See Note 5	As Required

Source: https://assist.dla.mil -- Downloaded: 2016-12-01T07:08Z
Check the source to verify that this is the current version before use.

Table IV-A 2D Symbol Data Descriptions Format 07		
Format 07 Data Element Identifier	**DOD Usage (See Note 1)**	**Data Sources**
36	**Package ID/Serial Number** Also see Format 06 DI I for VIN	DTR Chapter 208 DTR App M (TCMD T_5)
37	Not for use: Vehicle Model Number See Format 07 DEI 10	
38	**Nomenclature**	DD 1348-1A DTR App M (TCMD T_5/T_6)
39	**Number of Rounds** – of ammunition	DTR App M (TCMD T_6)
40	**United Nations (UN) Class/Division Code**	DTR App M (TCMD T_6)
41	**UN/NA Indicator** – designates UN or North American source See Note 4	DTR App M (TCMD T_6)
42	**UN/North American ID Number** See Note 4	DTR App M (TCMD T_6)
43	**Compatibility Group Code**	DTR App M (TCMD T_6)
44	**Net Explosive Weight**	DTR App M (TCMD T_7)
45	**Owner's Last Name**	DTR Chapter 208 DTR App M (TCMD T_8)
46	**Owner's First and Middle Initials**	DTR Chapter 208 DTR App M (TCMD T_8)
47	**Owner's Grade**	DTR Chapter 208 DTR App FF DTR App M, TCMD T_8
48	**Type Service**	DTR Table 208-2
49	**Air Commodity/Special Handling Codes**	DTR Chapter 208 DTR App M DTR App Z and AA
50	**Type Pack Code**	DTR App M DTR App UU
51	**SEAVAN Ownership Code**	DTR App M (TCMD T_2, Table M-5) DTR App TT
52	**Reserved – for future assignment**	

Source: https://assist.dla.mil -- Downloaded: 2016-12-01T07:08Z
Check the source to verify that this is the current version before use.

Table IV-A 2D Symbol Data Descriptions Format 07		
Format 07 Data Element Identifier	**DOD Usage (See Note 1)**	**Data Sources**
53	Reserved – for future assignment	
54	Reserved - for future assignment	
55	**Consignee Distribution (CDIST) Code**	DTR App M (TCMD T_2, Tables M-4 & M-5, rp 57)
56	**Number of Shipment Units in Van**	DTR App M (TCMD T_2, Table M-5, rp 58-59)
57	**Number of Pieces in Van**	DTR App M (TCMD T_2, Table M_5, rp 68-71)
58	**Van Inside Cube** - default = cubic feet	DTR App M (TCMD T_2, Table M_5, rp 64-67)
59	**Van Length** Default = feet	DTR App M (TCMD T_2, Table M_5, rp 13-14)
60	**Van Number** – complete serial number or ISO ID serial number (without check digit or owner code)	DTR App M (TCMD T_9, Table M-14, rp 56-63)
61	**Check Digit** - of the van number	DTR App M (TCMD T_9, Table M-14)
62	**Temperature Range** - shown in Fahrenheit degrees	DTR App M (TCMD T_9, Table M-14
63	**Stopoff Number and Consignee DODAAC**	DTR App M (TCMD T_9, Table M-15, rp 54-65)
64	Not for use: Major Subordinate Element (MSE)	
65	Not for use: Ultimate Consignee/Mark For DODAAC See Format 07 DEI 27	
66	Not for use: FMS Country Code	
67	**FMS Case Number** - foreign military sales case # for MSL	DTR Table 208-2
68	Not for use: FMS Charges	
69	**Personal Property Code** - for household goods and baggage	DTR App M (TCMD T_8, Table M-12, rp 71)
70	**Net Weight** Default = pounds See Note 3	DTR Chapter 208 DTR App M (TCMD T_8)

Source: https://assist.dla.mil -- Downloaded: 2016-12-01T07:08Z
Check the source to verify that this is the current version before use.

Table IV-A 2D Symbol Data Descriptions Format 07		
Format 07 Data Element Identifier	**DOD Usage (See Note 1)**	**Data Sources**
71	**Privately Owned Vehicle (POV) Model Year**	DTR App M (TCMD T_8)
72	**Privately Owned Vehicle (POV) Make**	DTR App M (TCMD T_8)
73	**Privately Owned Vehicle (POV) State of Registration**	DTR App M (TCMD T_8)
74	**Privately Owned Vehicle (POV) License Number**	DTR App M (TCMD T_8)
75	**Privately Owned Vehicle (POV) Color**	DTR App M (TCMD T_8)
76	**Stopoff Consolidation Code** - stopoff point for delivery	DTR App M (TCMD T_3/4 (See Note)
77	Not for use: To Be Redefined	
78	Not for use: To Be Redefined	
79	Not for use: To Be Redefined	
80	Not for use: To Be Redefined	
81	**Supplementary Address**	DD 1348-1A (rp 45-50)

Note 1. The ANSI MH10.8.2 DIs and DOD DEIs listed show the current, reserved, and "Not for use" DOD data descriptions for historical reference. For an updated list of Format 06 DIs and Format 07 DEIs selected for use by DOD, refer to the DOD Logistics AIT Office web site at < **http://www.dla.mil/j-6/AIT** >.

Note 2. In order to provide space in the 2D symbol for multiple supply line item data, the in-the-clear address data is not printed in the 2D symbol for shipment units containing multiple supply line items (multipack or consolidated shipment). DODAAC addresses from < **https://dodaac.wpafb.af.mil**> are structured as 4 lines of 35 characters -- the 5th line in the "Ship To" and "Consignee" address blocks are to accommodate DLA addressing options, foreign military sales addressing, and foreign nation addresses. The "From" address line is structured as 3 lines of 35 characters to accommodate DLA addressing options and to save space on the MSL.

Note 3. To accommodate current automated information systems, US default values are assumed as shown. Metric data values may be used in the 2D symbol for generic cargo shipment descriptions, but the data values must be marked with the metric units of measure from the ANSI X12.3 code list 355. The ANSI X12.3 codes selected for use are: KG = kilograms, CM = centimeter, CC = cubic centimeter, MR = meter, CR = cubic meter. Decimal values are allowed in the 2D symbol. Human readable values printed on the DOD MSL shall be in US standard unit of measure format and shall be rounded to the next higher whole number with leading zeros suppressed.

Note 4. Format 07 DEI 41 is the qualifier for DEI 42. That is, DEI 41 indicates whether the code value in DI 42 came from the UN or a North American table of values, e.g., International Maritime Dangerous Goods Code, CFR Title 49, or other source publication.

Note 5. System must be expecting and be able to accommodate free text information.

Note 6. The plus symbol (+) is used as a delimiter between the data elements and is part of the data sub-string.

Source: https://assist.dla.mil -- Downloaded: 2016-12-01T07:08Z
Check the source to verify that this is the current version before use.

Table IV-B
MSL Generic Cargo 2D Symbol Format

Compliance Indicator	Element Separators	Format Header	Format 06 DI	Format 07 DEI	Data Field	Data Format Type/Length	Sample Data without DI/DEI
[)>					**Message Header Compliance Indicator**		**[)>**
	RS	**06**			**Data Identifier Format Header**		**06**
	GS		JKUSM		TCN	an17	SW81238350D001XXX
	GS		3D		Ship Date	an4	1090
	GS		9K		TAC	an4	SZZZ
	GS		2L		Ship To Address See Note 1	an..35+ an..35+ an..35+ an..35+ an..35 See Note 3	1st address line+2nd address line+3rd address line+4th address line+5th address line
	GS		3L		From Address See Note 1	an..35+ an..35+ an..35 See Note 3	1st address line+2nd address line+3rd address line
	GS		5L		Consignee Address See Note 1	an..35+ an..35+ an..35+ an..35+ an..35 See Note 3	1st address line+2nd address line+3rd address line+4th address line+5th address line
	GS		51L		Origin Zip Code for SEAVAN point of origin	an5	45324
	GS		N		NSN See Note 2	an..13	123456789012345
	GS		2Q		Weight (shipment piece)	an..5+../an2 See Note 4	7760 Or metric: 1759/KG
	GS		13Q		Piece Number /Total Pieces	an..4/an..4	1/1
	GS		4R		DODIC See Note 2	an4	PL23
	GS		13S		Security Seal Number	an8	90876787
	GS		1T		Lot Number See Note 2	an..25	MCG77G002-060
	GS		4V		Ocean Carrier Code	an4	SEAU
	GS		17V		CAGE Code – Consignor	an5	6R517
	RS	**07**			**Free Text Format Header**		**07**
	GS			03	Project Code	an3	9BU
	GS			10	Model Identifier	an..10	KZ456754

Source: https://assist.dla.mil -- Downloaded: 2016-12-01T07:08Z
Check the source to verify that this is the current version before use.

Table IV-B
MSL Generic Cargo 2D Symbol Format

Compliance Indicator	Element Separators	Format Header	Format 06 DI	Format 07 DEI	Data Field	Data Format Type/Length	Sample Data without DI/DEI
	GS			12	Cube (shipment piece)	an..4+../an2 See Note 4	35
	GS			15	Water Commodity/Special Handling Codes	an5	390Z9
	GS			18	Length Default = inches	n..6+../an2 See Note 4	1239
	GS			19	Width Default = inches	n..4+../an2 See Note 4	123
	GS			20	Height Default = inches	n..4+../an2 See Note 4	135
	GS			21	Pallet Identifier	an..6	DOVARC
	GS			23	Air Dimension Code	an1	A
	GS			24	Container Number Code	an5	13579
	GS			25	POE Code	an3	DOV
	GS			26	POD Code	an3	RMS
	GS			27	Consignee DODAAC	an6	W55XGJ
	GS			28	Transportation Priority	n1	1
	GS			29	Consignor DODAAC	an6	SW8123
	GS			30	Method Code	an1	B
	GS			32	RDD	an..3	999
	GS			34	TCMD/Manifest Doc ID Code (header DIC only)	an3	TX1
	GS			35	Free Text Comment	an..60	NO LINE ITEM DATA
	GS			36	Serial Number	an..13	234567890123
	GS			38	Nomenclature	an..14	Boots
	GS			39	Number of Rounds	n..6	112000
	GS			40	UN Class/Division Code	an2	1A
	GS			41	UN/NA Indicator	an2	UN
	GS			42	UN/NATO ID Number	an4	2766
	GS			43	Compatibility Group Code	an1	Z
	GS			44	Net Explosive Weight	n..6	449800
	GS			48	Type Service	an..10	Frt LTL

Source: https://assist.dla.mil -- Downloaded: 2016-12-01T07:08Z
Check the source to verify that this is the current version before use.

Table IV-B
MSL Generic Cargo 2D Symbol Format

Compliance Indicator	Element Separators	Format Header	Format 06 DI	Format 07 DEI	Data Field	Data Format Type/Length	Sample Data without DI/DEI
	GS			49	Air Commodity/Special Handling Codes	an2	AZ
	GS			50	Type Pack Code	an2	BX
	GS			51	SEAVAN Ownership Code	an4	SEAU
	GS			55	CDIST Code for number of Consignees	an1	M
	GS			56	SUs in Van	n2	12
	GS			57	Pieces in Van	n4	1234
	GS			58	Van Inside Cube	an..4	1234
	GS			59	Van Length	an..2	40
	GS			60	Van Number (complete)	an8	12345678
	GS			61	Check Digit	n1	9
	GS			62	Temperature Range	an..5	F632
	GS			63	Stopoff Number and Consignee DODAAC	n..2+an6	1AF5612
	GS			67	FMS Case Number	an3	CKM
	GS			76	Stopoff Consolidation Code	an1	X
The following sets of data (DI 12S through 12Q) repeat for each supply line item in the shipment							
	RS	**06**			**Data Identifier Format Header**		**06**
	GS		12S		Supply Document Number	an14..15	WK4GEY80110232
	GS		N		NSN	an..15	5310011987585
	GS		4R		DODIC (ammo only)	an4	PL23
	GS		1T		Lot Number (ammo only)	an..25	MCG77G002-060
	GS		7Q		Quantity & UI	n..5+an2	5EA
	GS		V		Routing Identifier Code	an3	S9I
	GS		2R		Condition Code	an1	A
	GS		8V		Distribution Code	an2	7V
	GS		12Q		Unit Price	n..9+.n2+an3	12345.90USD
	GS		12S		Supply Document Number	an14..15	WK4GEY80110232
	GS		N		NSN	an..15	5310011987585
	GS		4R		DODIC (ammo only)	an4	PL23
	GS		1T		Lot Number (ammo only)	an..25	MCG77G002-060
	GS		7Q		Quantity & UI	n..5+an2	5EA

Source: https://assist.dla.mil -- Downloaded: 2016-12-01T07:08Z
Check the source to verify that this is the current version before use.

Table IV-B
MSL Generic Cargo 2D Symbol Format

Compliance Indicator	Element Separators	Format Header	Format 06 DI	Format 07 DEI	Data Field	Data Format Type/Length	Sample Data without DI/DEI
	GS		V		Routing Identifier Code	an3	S9I
	GS		2R		Condition Code	an1	A
	GS		8V		Distribution Code	an2	7V
	GS		12Q		Unit Price	n..9+.n2+an3	12345.90USD
	RS EOT						

Note 1. In order to provide space in the 2D symbol for multiple supply line item data, the in-the-clear address data is not printed in the 2D symbol for shipment units containing multiple supply line items (multipack or consolidated shipment).

Note 2. The Format 06, DI N, 4R, or 1T elements shall only be shown in this part of the 2D symbol if TCMD T_6 data or TCMD T-7 data is available as a source. In most cases, NSN information will not be available from TCMD T_6 data for a shipment unit of consolidated multiple line items.

Note 3. The plus symbol (+) is used as a delimiter between the data elements and is part of the data sub-string.

Note 4. To accommodate current automated information systems, US default values are assumed as shown. Metric data values may be used in the 2D symbol for generic cargo shipment descriptions, but the data values must be marked with the metric units of measure from the ANSI X12.3 code list 355. The ANSI X12.3 codes selected for use are: KG = kilograms, CM = centimeter, CC = cubic centimeter, MR = meter, CR = cubic meter. Decimal values are allowed in the 2D symbol. Human readable values printed on the DoD MSL shall be in US standard unit of measure format and shall be rounded to the next higher whole number with leading zeros suppressed.

Source: https://assist.dla.mil -- Downloaded: 2016-12-01T07:08Z
Check the source to verify that this is the current version before use.

Table IV-C
MSL Unit Move 2D Symbol Format

Compliance Indicator	Element Separators	Format Header	Format 06 DI	Format 07 DEI	Data Field	Data Format Type/Length	Sample Data without DI/DEI
[)>					**Message Header Compliance Indicator**		**[)>**
	RS	**06**			**Data Identifier Format Header**		**06**
	GS		JKUSM		TCN	an17	AWS1EAA$0D00340XX
	GS		I		VIN	an17	V739GXL1794AB12PZ
	GS		9K		TAC	an4	YZZZ
	GS		2L		Ship To Address	an..35+an..35+ an..35+an..35+ an..35 See Note 1	1st address line+2nd address line+3rd address line+4th address line+5th address line
	GS		3L		From Address	an..35+an..35+ an..35 See Note 1	1st address line+2nd address line+3rd address line
	GS		5L		Consignee Address	an..35+an..35+ an..35+an..35+ an..35 See Note 1	1st address line+2nd address line+3rd address line+4th address line+5th address line
	GS		51L		Origin Zip Code for SEAVAN point of origin	an5	45324
	GS		N		NSN	an..15	1234567890123
	GS		2Q		Weight (shipment piece)	an..5+../an2 See Note 2	14000
	GS		13Q		Piece Number/Total Pieces	an..4/an..4	1/1
	GS		4R		DODIC	an4	PL23
	GS		13S		Security Seal Number	an8	90876787
	GS		25S		Unique Item Identifier	an..50	UN077991289123456789 0123
	GS		1T		Lot Number	an..25	MCG77G002-060
	GS		4V		Ocean Carrier Code	an4	SEAU
	RS	**07**			**Free Text Format Header**		**07**
	GS			03	Project Code	an3	9BU
	GS			04	ULN	an..7	1234567
	GS			05	UIC	an6	WS1EAA
	GS			06	Bumper Number	an..8	HQ-123

Source: https://assist.dla.mil -- Downloaded: 2016-12-01T07:08Z
Check the source to verify that this is the current version before use.

Table IV-C
MSL Unit Move 2D Symbol Format

Compliance Indicator	Element Separators	Format Header	Format 06 DI	Format 07 DEI	Data Field	Data Format Type/Length	Sample Data without DI/DEI
	GS			09	Unit Equipment Description	an..20	HELICPR CARGO MH-60K
	GS			10	Model Identifier	an..10	12345ASDFG
	GS			12	Cube (shipment piece)	an..4+../an2 See Note 2	1200
	GS			15	Water Commodity/Special Handling Codes	an5	900Z9
	GS			18	Length Default = inches	n..6+../an2 See Note 2	1239
	GS			19	Width Default = inches	n..4+../an2 See Note 2	123
	GS			20	Height Default = inches	n..4+../an2 See Note 2	135
	GS			21	Pallet Identifier	an..6	DOVARC
	GS			23	Air Dimension Code	an1	A
	GS			24	Container Number Code	an5	13579
	GS			25	POE Code	an3	DOV
	GS			26	POD Code	an3	RMS
	GS			27	Consignee DODAAC	an6	W44TYH
	GS			29	Consignor DODAAC	an6	AWA2UC
	GS			30	Method Code	an1	A
	GS			32	RDD	an..3	999
	GS			34	TCMD/Manifest Doc ID Code (header DIC only)	an3	TX1
	GS			35	Free Text Comment	an..60	60 characters free text
	GS			36	Package ID/Serial Number	an..13	1234567890123
	GS			38	Nomenclature	an..14	Parts
	GS			39	Number of Rounds	n..6	112000
	GS			40	UN Class/Division Code	an2	1A
	GS			41	UN/NA Indicator	an2	UN
	GS			42	UN/NATO ID Number	an4	2766
	GS			43	Compatibility Group Code	an1	Z
	GS			44	Net Explosive Weight	n..6	449800
	GS			49	Air Commodity/Special Handling Codes	an2	VD

Source: https://assist.dla.mil -- Downloaded: 2016-12-01T07:08Z
Check the source to verify that this is the current version before use.

Table IV-C
MSL Unit Move 2D Symbol Format

Compliance Indicator	Element Separators	Format Header	Format 06 DI	Format 07 DEI	Data Field	Data Format Type/Length	Sample Data without DI/DEI
	GS			50	Type Pack Code	an2	BX
	GS			51	SEAVAN Ownership Code	an4	SEAU
	GS			55	CDIST Code	an1	M
	GS			56	SUs in Van	n2	12
	GS			57	Pieces in Van	n4	1234
	GS			58	Van Inside Cube	n4	1234
	GS			59	Van Length	n2	40
	GS			60	Van Number (complete)	an8	12345678
	GS			61	Check Digit	n1	9
	GS			62	Temperature Range	an..5	F632
	GS			63	Stopoff Number and Consignee DODAAC	n..2+an6	1AF5612
	GS			76	Stopoff Consolidation Code	an1	X
	RS EOT						

Note 1. The plus symbol (+) is used as a delimiter between the data elements and is part of the data sub-string.

Note 2. To accommodate current automated information systems, US default values are assumed as shown. Metric data values may be used in the 2D symbol for generic cargo shipment descriptions, but the data values must be marked with the metric units of measure from the ANSI X12.3 code list 355. The ANSI X12.3 codes selected for use are: KG = kilograms, CM = centimeter, CC = cubic centimeter, MR = meter, CR = cubic meter. Decimal values are allowed in the 2D symbol. Human readable values printed on the DoD MSL shall be in US standard unit of measure format and shall be rounded to the next higher whole number with leading zeros suppressed.

Source: https://assist.dla.mil -- Downloaded: 2016-12-01T07:08Z
Check the source to verify that this is the current version before use.

Table IV-D
Unit Pack and Container ID 2D Symbol Format

Compliance Indicator	Element Separators	Format Header	Format 06 DI	Format 07 DEI	Data Field	Data Format Type/Length	Sample Data without DI/DEI
[)>					**Message Header Compliance Indicator**		**[)>**
	RS	**06**			**Data Identifier Format Header**		**06**
	GS		4K		Contract Line Item Number (CLIN)	an6	0013AB
	GS		5K		Contractor Shipment Number	an7	PBPA001
	GS		8K		Contract Number	an..21	N00023-90-D-0009
	GS		N		NSN	an14..15	M12001200100001
	GS		S		Serial Number or Code	an..30	674A3645
	GS		S		Serial Number or Code	an..30	674A3646
	GS		S		Serial Number or Code	an..30	674A3647
	GS		25S		Unique Item Identifier (UII)	an..50	UN077991289674A3645
	GS		25S		Unique Item Identifier (UII)	an..50	UN077991289674A3646
	GS		25S		Unique Item Identifier (UII)	an..50	UN077991289674A3647
	GS		17V		CAGE Code	an3	12345
	RS EOT						

Source: https://assist.dla.mil -- Downloaded: 2016-12-01T07:08Z
Check the source to verify that this is the current version before use.

Table IV-E. Label 1 of 2 for Figure 49
Ammunition/Explosives Marking 2D Symbol Format

Compliance Indicator	Element Separators	Format Header	Format 06 DI	Format 07 DEI	Data Field	Data Format Type/Length	Sample Data without DI/DEI
[)>					Message Header Compliance Indicator		[)>
	RS	**06**			**Data Identifier Format Header**		**06**
	GS		20S		Label Serial Number – unique traceability number Format is UMYYMMDDhhmmssssRRNX UM=unit of measure, YY=year, MM=month, DD=date, hh=hour, mm=minute, ssss=seconds and hundredths of a second, RR=random number, NX=label N of X labels See note	an20	KT020218160123400612
	GS		7Q		Weight	n..9+an2 See Note	1700LB
	GS		7Q		Cube	an..9+an2 See Note	225CF
In the following examples, the NSN or PN set of data (beginning with DI N or DI 1P) repeats for each set. Within each NSN or PN data set, multiple Lot Number data sets may exist (beginning with DI 1T). Entries within each data set may be in any order.							
	GS		N		NSN	an..15	1234567890123
	GS		7Q		Quantity	n..9+an2 See note	25EA
	GS		4R		DODIC	an4	P123
	GS		10P		Hazardous Material Code (UN ID Number)	an1+an..4	U1234
	GS		1T		Lot Number	an..17	UNKNOWN
	GS		7Q		Quantity	n..9+an2	2EA
	GS		1T		Lot Number	an..17	MCG77G002-161

Source: https://assist.dla.mil -- Downloaded: 2016-12-01T07:08Z
Check the source to verify that this is the current version before use.

Table IV-E. Label 1 of 2 for Figure 49
Ammunition/Explosives Marking 2D Symbol Format

Compliance Indicator	Element Separators	Format Header	Format 06 DI	Format 07 DEI	Data Field	Data Format Type/Length	Sample Data without DI/DEI
	GS		7Q		Quantity	n..9+an2	20EA
	GS		1T		Lot Number	an..17	MCG77G002-162
	GS		7Q		Quantity	n..9+an2	3EA
	GS		1P		Part Number	an..16	1234567890
	GS		S		Serial Number	an..15	1234567894
	GS		S		Serial Number	an..15	1234567892
	GS		S		Serial Number	an..15	1234567891
	GS		4R		DODIC	an4	PL34
	GS		7Q		Quantity	n..9+an2	3EA
	GS		10P		Hazardous Material Code (UN ID Number)	an1+an..4	U5634
	GS		N		NSN	an..15	1234567890000
	GS		7Q		Quantity	n..9+an2	1EA
	GS		4R		DODIC	an4	Y556
	GS		10P		Hazardous Material Code (UN ID Number)	an1+an..4	U4321
	GS		1T		Lot Number	an..17	AMC99C002-105B
	GS		S		Serial Number	an..15	A.129.4567346
	GS		7Q		Quantity	n..9+an2	1EA
	RS EOT						

Source: https://assist.dla.mil -- Downloaded: 2016-12-01T07:08Z
Check the source to verify that this is the current version before use.

Table IV-E. Label 2 of 2 for Figure 49
Ammunition/Explosives Marking 2D Symbol Format

Compliance Indicator	Element Separators	Format Header	Format 06 DI	Format 07 DEI	Data Field	Data Format Type/Length	Sample Data without DI/DEI
[)>					**Message Header Compliance Indicator**		**[)>**
	RS	**06**			**Data Identifier Format Header**		**06**
	GS		20S		Label Serial Number – unique traceability number Format is UMYYMMDDhhmmssssRRNX UM=unit of measure, YY=year, MM=month, DD=date, hh=hour, mm=minute, ssss=seconds and hundredths of a second, RR=random number, NX=label N of X labels See note	an20	KT020218160123400622
	GS		7Q		Weight	n..9+an2 See Note	1700LB
	GS		7Q		Cube	n..9+an2 See Note	225CF
In the following examples, the NSN or PN set of data (beginning with DI N or DI 1P) repeats for each set. Within each NSN or PN data set, multiple Lot Number data sets may exist (beginning with DI 1T). Entries within each data set may be in any order.							
	GS		N		NSN	an..15	1234567890000
	GS		7Q		Quantity	n..9+an2 See Note	2EA
	GS		4R		DODIC	an4	Y556
	GS		10P		Hazardous Material Code (UN ID Number)	an1+an..4	U4321
	GS		1T		Lot Number	an..17	PGT89B002-199
	GS		7Q		Quantity	n..9+an2 See Note	2EA

Source: https://assist.dla.mil -- Downloaded: 2016-12-01T07:08Z
Check the source to verify that this is the current version before use.

Table IV-E. Label 2 of 2 for Figure 49
Ammunition/Explosives Marking 2D Symbol Format

Compliance Indicator	Element Separators	Format Header	Format 06 DI	Format 07 DEI	Data Field	Data Format Type/Length	Sample Data without DI/DEI
	GS		S		Serial Number	an..15	A.123.4567891
	GS		S		Serial Number	an..15	A.123.4567892
	GS		N		NSN	an..15	1234567890999
	GS		7Q		Quantity	n..9+an2 See Note	25EA
	GS		4R		DODIC	an4	J789
	GS		10P		Hazardous Material Code (UN ID Number)	an1+an..4	U5678
	GS		1T		Lot Number	an..17	MCG77G002-592
	GS		7Q		Quantity	n..9+an2 See Note	25EA
	GS for each line		S		Serial Number	an..15	Entire line repeats for each serial number 1234567001 thru 1234567025
	RS EOT						

Note. Ammunition/explosive markings must be annotated with units of measure from the ANSI X12.3 code list 355. Metric data values may also be used. The ANSI X12.3 codes selected for use are: PC = piece, BX = box, CN = can, KT = kit, PL = pallet, CH = container, RL = roll, EA = each, LB = pound, FT = foot, CF = cubic feet, KG = kilograms, CM = centimeter, CC = cubic centimeter, MR = meter, CR = cubic meter. Decimal values are allowed in the 2D symbol's Quantity fields and, if encoded, the total Weight and total Cube fields in the 2D symbol should be rounded to the next whole number. Human readable information for the total Weight and total Cube will be rounded to the next whole number.

Source: https://assist.dla.mil -- Downloaded: 2016-12-01T07:08Z
Check the source to verify that this is the current version before use.

CONCLUDING MATERIAL

Custodians:
Army - SM
Navy - SA
Air Force – 11
DLA - DH

Preparing activity:

Army - SM

(Project PACK-2006-001)

Review activities:
Army - AM, AR, AT, AV, CR, CR3, EA, GL3, MI, MR, MT, PT, TM2
Navy - AS, CG, EC, MC, NP, OS, SH, TD
Air Force - 16, 70, 71, 84, 99
DLA - CC, CT, DM, GS3, IS, PS

Civil Agency Coordinating Activity:
GSA - FAS

NOTE: The activities listed above were interested in this document as of the date of this document. Since organizations and responsibilities can change, you should verify the currency of the information above using the ASSIST Online database at http://assist.daps.dla.mil.

Source: https://assist.dla.mil -- Downloaded: 2016-12-01T07:08Z
Check the source to verify that this is the current version before use.