MILITARY SPECIFICATION

CIRCUIT BREAKERS, MAGNETIC, LOW-POWER, SEALED, TRIP-FREE, GENERAL SPECIFICATION FOR

This specification is approved for use by all Departments and Agencies of the Department of Defense.

1. SCOPE

1.1 Scope. This specification covers the requirements and test procedures for single and multipole, trip-free, sealed, low-power, magnetic circuit breakers with current ratings of 0.050 to 20.0 amperes inclusive, up to and including 240 volts, 60 and 400 hertz (Hz) alternating current (ac), and 50 volts direct current (dc) (see 6.1 and 6.7). These circuit breakers may also include auxiliary contacts (see 6.5.1) and terminals for monitoring circuits.

2. APPLICABLE DOCUMENTS

2.1 Government documents.

2.1.1 Specifications and standards. The following specifications and standards form a part of this specification to the extent specified herein. Unless otherwise specified, the issues of these documents shall be those listed in the issue of the Department of Defense Index of Specifications and Standards (DODISS) and supplement thereto, cited in the solicitation.

SPECIFICATIONS

FEDERAL

NN-P-71	-	Pallets, Material Handling, Wood, Double Faced, Stringer Construction.
QQ-P-416	-	Plating, Cadmium (Electrodeposited).
QQ-S-571	-	Solder; Tin Alloy; Tin-Lead Alloy; and Lead Alloy.
QQ-S-781	-	Strapping, Steel, Flat and Seals.
QQ-Z-325	-	Zinc Coating, Electrodeposited, Requirements for.
PPP-B-566	-	Boxes, Folding, Paperboard.
PPP-B-585	-	Boxes, Wood, Wirebound.
PPP-B-601	-	Boxes, Wood, Cleated-Plywood.
PPP-B-621	-	Boxes, Wood, Nailed and Lock-Corner.
PPP-B-636	-	Boxes, Shipping, Fiberboard.
PPP-B-676	-	Boxes, Setup.
PPP-T-60	-	Tape, Packaging, Waterproof.
PPP-T-76	-	Tape, Pressure-Sensitive Adhesive Paper (For Carton Sealing).

MILITARY

MIL-P-116	-	Preservation-Packaging, Methods of.
MIL-F-14256	-	Flux, Soldering, Liquid (Rosin Base).

(See supplement 1 for list of applicable specification sheets.)

Beneficial comments (recommendations, deletions) and any pertinent data which may be of use in improving this document should be addressed to US Army Laboratory Command by using the self-addressed Standardization Document Improvement Proposal (DD Form 1426) appearing at the end of this document or by letter

DISTRIBUTION STATEMENT A. Approved for public release, distribution is unlimited

Source: https://assist.dla.mil -- Downloaded: 2016-11-16T18:43Z
Check the source to verify that this is the current version before use.

STANDARDS

MILITARY

MIL-STD-105 - Sampling Procedures and Tables for Inspection by Attributes
MIL-STD-129 - Marking for Shipment and Storage.
MIL-STD-147 - Palletized Unit Loads on 40" x 48" Pallets.
MIL-STD-202 - Test Methods for Electronic and Electrical Component Parts.
MIL-STD-454 - Standard General Requirements for Electronic Equipment.
MIL-STD-1285 - Marking of Electrical and Electronic Parts.
MIL-STD-45662 - Calibration System Requirements.

(Copies of the specifications and standards required by contractors in connection with specific acquisition functions should be obtained from the contracting activity or as directed by the contracting activity.)

2.2 Other publications. The following documents form a part of this specification to the extent specified herein. Unless otherwise specified, the issues of the documents which are DOD adopted shall be those listed in the issue of the DODISS specified in the solicitation. Unless otherwise specified, the issues of documents not listed in the DODISS shall be the issue of the nongovernment documents which is current on the date of the solicitation.

NATIONAL BUREAU OF STANDARDS

Handbook H28 - Screw-Thread Standards for Federal Services

(Application for copies should be addressed to the Superintendent of Documents, Government Printing Office, Washington, D.C. 20402.)

AMERICAN NATIONAL STANDARDS INSTITUTE

ANSI Y32.2 - 1975 (IEEE STD 315-1975) - Graphic Symbols for Electrical and Electronic Diagrams.

(Applications for copies should be addressed to the American National Standards Institute, 10 East 40th Street, New York, N.Y. 10016.)

2.3 Order of precedence. In the event of a conflict between the text of this specification and the references cited herein, (except for associated detail specifications, specification sheets or MS standards) the text of this specification shall take precedence. Nothing in this specification, however, shall supersede applicable laws and regulations unless a specific exemption has been obtained.

3. REQUIREMENTS

3.1 Specification sheets. The individual item requirements shall be as specified herein and in accordance with the applicable specification sheets. In the event of any conflict between requirements of this specification and the specification sheets, the latter shall govern.

3.2 Qualification. Circuit breakers furnished under this specification shall be products which are qualified for listing on the applicable qualified products list at the time set for opening of bids (see 4.5 and 6.3).

3.3 Material. Material shall be as specified herein. However, when a definite material is not specified, a suitable material shall be used which will enable the circuit breakers to conform to the performance requirements of this specification. Acceptance or approval of any constituent material shall not be construed as a guaranty of the acceptance of the finished product.

3.3.1 Metals. Metals shall be of a corrosion-resistant type or shall be suitably plated or treated to resist corrosion (see 3.21). Cadmium and zinc plating shall not be used.

Source: https://assist.dla.mil -- Downloaded: 2016-11-16T18:43Z
Check the source to verify that this is the current version before use.

3.3.1.1 Dissimilar metals. When dissimilar metals are used in intimate contact with each other, protection against electrolysis and corrosion shall be provided. The use of dissimilar metals in contact, which tend toward active electrolytic corrosion (particularly brass, copper, or steel used in contact with aluminum or aluminum alloy), is not acceptable. However, metal plating or metal spraying of dissimilar base metals to provide similar or suitable abutting surfaces is permitted. The use of dissimilar metals separated by a suitable insulating material is also permitted. Dissimilar metals are defined in 6.4 to 6.4.4, inclusive, and table VII.

3.3.2 Fungus resistance. Materials shall be used which are not nutrients for fungus as specified in requirement 4 of MIL-STD-454.

3.3.3 Solder and soldering flux. Solder, when used, shall be composition Sn60 or Sn96 in accordance with QQ-S-571 and soldering flux shall be in accordance with MIL-F-14256.

3.4 Design and construction. Circuit breakers shall be of the design, construction, and physical dimensions specified (see 3.1).

3.4.1 Trip-free feature. Circuit breakers shall be so designed that the circuit cannot be maintained closed by physically holding the lever in the closed position when any pole is carrying overload currents which would normally automatically trip the breaker to the open position.

3.4.2 Trip indication. Circuit breakers shall be so designed that when the circuit breaker contacts open automatically on overload, the actuating lever shall indicate the operation by moving to the "off"("trip") position.

3.4.3 Attitude. Circuit breakers shall be so constructed as to insure proper minimum and maximum tripping time delay operation (see 3.9 and 3.13) when mounted in any position.

3.4.4 Actuating lever. The exposed portion of the actuating lever shall have a smooth, nonglare, metallic finish, and shall be insulated from all current-carrying parts. Multipole circuit breakers (see 6.6.3) shall be designed so that it will be impossible by any manipulation of the actuating lever to close less than the total number of contacts. The actuating level shall point in the direction of the mounting bushing keyway when the circuit breaker is in the "closed" ("on") position.

3.4.5 Panel seal. The panel seal shall effectively seal the circuit breaker to the mounting panel.

3.4.6 Mounting hardware. Mounting hardware shall be as specified (see 3.1). Circuit breakers shall be furnished with a nonturn device. Each circuit breaker shall be furnished with a tab or plate which fits over the mounting bushing and into the keyway slot. The tab or plate shall be marked with "ON" on the side where the keyway slot is located and "OFF" on the side opposite the keyway slot. For direct Government procurement, the hardware shall be assembled in proper order as specified (see 3.1).

3.4.7 Threaded parts. Screw threads on removable threaded parts shall be in accordance with Handbook H28. Threading of nonmetallic parts shall not be permitted.

3.4.8 Terminals.

3.4.8.1 Line and load terminals. The main line and load terminals shall be mounted as specified (see 3.1). Load terminals will be on the side of the keyway and line terminals will be on the side opposite of the keyway. Each terminal shall be capable of carrying rated current and voltage per pole of the circuit breaker. The terminal design is optional (turret or hook style preferred). Screw terminals shall not be used.

3.4.8.2 Auxiliary contact terminals. When specified (see 3.1), circuit breakers shall be provided with auxiliary contacts (see 6.6.1) of the single-pole, double-throw type and three auxiliary contact terminals, which, unless otherwise specified (see 3.1), shall be capable of carrying 0.5 ampere tungsten lamp load at 50 volts dc or 120 volts ac. There shall be one common terminal (designated by symbol "C"), one terminal to indicate auxiliary contacts which are normally open (designated by symbol "NO") when the main circuit breaker contacts are open, and one terminal to indicate auxiliary contacts which are normally closed (designated by symbol "NC") when the main circuit breaker contacts are open, regardless of lever position. Terminal location, style, and design shall be as specified (see 3.1).

3.4.8.3 Solderability of terminals. Terminals shall be treated to facilitate soldering. Coatings such as hot solder dip or hot tin dip are acceptable.

Source: https://assist.dla.mil -- Downloaded: 2016-11-16T18:43Z
Check the source to verify that this is the current version before use.

3.4.9 Reset mechanism. The reset mechanism shall be so designed that retaining the actuator in the closed position after automatic tripping occurs shall not adversely affect subsequent performance of the circuit breaker.

3.4.10 Tamper-proof calibration. Circuit breakers shall be so sealed that tampering with the calibration is not possible without dismantling the device or breaking the seal.

3.4.11 Soldering. When soldering is employed, only noncorrosive fluxes shall be used. Solder shall not be used primarily for obtaining mechanical strength. Electrical connections shall be mechanically secure before, and electrically continuous after, soldering.

3.4.12 Welding and brazing. When welding or brazing is employed, the electrical connections shall be mechanically secure and electrically continuous after welding or brazing. When brazing is employed, only noncorrosive fluxes shall be used.

3.4.13 Voltage and frequency rating. Circuit breakers shall be designed to have identical load ratings at all voltages up to and including 50 V dc and 240 V ac, 60 and 400 Hz (see 3.1 and 6.8).

3.4.14 Continuous current-carrying capacity. Circuit breakers shall be capable of continuously carrying the rated current as specified (see 3.1).

3.4.15 Circuit diagram. The circuit diagram shall be as specified (see 3.1).

3.5 Solderability. When circuit breakers are tested as specified in 4.7.2, 95 percent of the total length of fillet, which is between the standard wrap wire and the terminal, shall be tangent to the surface of the terminal being tested. There shall be no pinholes, voids, etc. A ragged or interrupted line at the point of tangency between the fillet and the terminal under test shall be considered a defect. After the test there shall be no evidence of fracture, loosening of parts, or any other mechanical failure of the circuit breakers.

3.6 Dielectric withstanding voltage. When circuit breakers are tested as specified in 4.7.3, the leakage current shall not exceed 0.5 milliampere and there shall be no evidence of flashover, mechanical damage, arcing, or breakdown.

3.7 Insulation resistance. When circuit breakers are tested as specified in 4.7.4, the insulation resistance shall not be less than 100 megohms.

3.8 Resistance of impedance. Circuit breakers shall be tested as follows:

a. Main contacts - When circuit breakers are tested as specified in 4.7.5(a), the resistance or impedance of the main contacts shall not exceed the maximum values specified (see 3.1).

b. Auxiliary contacts - When circuit breakers are tested as specified in 4.7.5(b), the initial contact resistance shall not exceed 0.1 ohm.

3.9 Calibration. When circuit breakers are tested as specified in 4.7.6, the tripping times (see 6.6.6) shall not exceed the limits shown in table I for the applicable time delay specified (see 3.1 and 6.6.5). In multipole circuit breakers, all poles shall trip upon application of overload on any pole or combination of poles. When tested for high inrush, circuit breakers shall not trip.

3.10 Actuating lever (see 4.7.7).

3.10.1 Lever strength. When circuit breakers are tested as specified in 4.7.7.1, there shall be no evidence of mechanical damage.

3.10.2 Lever operating force. When circuit breakers are tested as specified in 4.7.7.2, the applied force necessary to operate the lever in either direction shall not exceed the following.

One-pole breaker - 4 pounds.
Two-pole breaker - 7 pounds.
Three-pole breaker - 10 pounds.

3.11 Seal. When circuit breakers are tested as specified in 4.7.8, there shall be no visible air bubbles indicative of leakage.

3.12 Panel seal. When circuit breakers are tested as specified in 4.7.9, there shall be no visible air bubbles indicative of leakage.

Source: https://assist.dla.mil -- Downloaded: 2016-11-16T18:43Z
Check the source to verify that this is the current version before use.

TABLE I. Calibration tripping times (seconds) at 25°C ±2°C.

Percent of rated current	Time delay A (fast)		Time delay B (slow)		Time delay C (nondelay)	
	Min	Max	Min	Max	Min	Max
100	No trip 1 hour	No trip 1 hour	No trip 1 hour	No trip 1 hour	No trip 1 hour	No trip 1 hour
135	0.2	7.0	3.0	60.0	Inst	0.1
200	0.055	0.95	0.5	9.0	Inst	0.05
400	Inst 2/	0.24	Inst	1.75	---	---
600	Inst	0.13	Inst	0.6	---	---
800	Inst	0.06	Inst	0.1 3/	---	---
800 at 60 Hz and DC 1/	No trip	No trip	No trip	No trip	N/A	N/A
1400 at 400 Hz 1/	No trip	No trip	No trip	No trip	N/A	N/A

1/ This test applicable only to breakers with high inrush design. See 3.9 and 4.7.6 for requirements.
2/ Instantaneous is defined as less than 0.015 second.
3/ This time is extended to 0.3 second for dc and 400 Hz when the high inrush design is incorporated.

3.13 High- and low-temperature operation. When circuit breakers are tested as specified in 4.7.10, there shall be no evidence of mechanical damage, and tripping time shall not exceed the limits shown in table II for the applicable time delay specified (see 3.1). Circuit breakers shall also meet the following requirements when tested under the conditions specified in 4.7.10:

a. Dielectric withstanding voltage (see 3.6).

b. Insulation resistance (see 3.7).

c. Seal (see 3.11).

d. Panel seal (see 3.12).

TABLE II. High- and low-temperature tripping times (seconds).

Percent of rated current	Time delay A (fast)		Time delay B (slow)		Time delay C (nondelay)	
	-40°C ±2°C	+100°C ±2°C	-40°C ±2°C	+100°C ±2°C	-40°C ±2°C	+100°C ±2°C
	Max	Min	Max	Min	Max	Min
100	No trip 1 hour	No trip 1 hour	No trip 1 hour	No trip 1 hour	No trip 1 hour	No trip 1 hour
135	400.0	0.10	500.0	0.4	0.10	Inst
150 1/	800.0	---	1000.0	---	0.20	---
200	5.0	0.015	25.0	0.04	0.05	Inst
400	0.7	Inst 2/	10.0	Inst	---	---
600	0.5	Inst	2.0	Inst	---	---
800	.06	Inst	0.1 4/	Inst	---	---
800 at 60 Hz 3/ and DC	No trip	No trip	No trip	No trip	N/A	N/A
1400 at 400 Hz 3/	No trip	No trip	No trip	No trip	N/A	N/A

1/ This test performed at -55°C ±2°C.
2/ Instantaneous is defined as less than 0.015 second.
3/ This test applicable only to breakers with high inrush design.
4/ This time is extended to 0.3 second for dc and 400 Hz when the high inrush design is incorporated.

Source: https://assist.dla.mil -- Downloaded: 2016-11-16T18:43Z
Check the source to verify that this is the current version before use.

3.14 Endurance. When circuit breakers are tested as specified in 4.7.11, there shall be no failure, and no evidence of mechanical damage or loosening of parts. Circuit breakers shall also meet the following requirements:

a. Dielectric withstanding voltage (see 3.6).

b. Insulation resistance (see 3.7)

c. Calibration (see 3.9).

d. Seal (see 3.11).

e. Auxiliary contact resistance (see 4.7.5(b)) - Contact resistance shall not exceed 0.4 ohm.

3.15 Terminal strength. When circuit breakers are tested as specified in 4.7.12, there shall be no short-circuiting, breakage, loosening, or rotation of terminals, and no damage to the circuit breaker body or seal.

3.16 Vibration, high frequency. When circuit breakers are tested as specified in 4.7.13, main circuit breaker contacts shall not trip. There shall be no closing of open main or auxiliary contacts, nor opening of closed main or auxiliary contacts in excess of 10 microseconds duration, nor shall there be any evidence of mechanical or electrical damage.

3.17 Moisture resistance. When circuit breakers are tested as specified in 4.7.14, the change in resistance or impedance between the initial and final recorded measurements shall not exceed 10 percent for circuit breaker current ratings of less than 5.0 amperes, and 25 percent for current ratings of 5.0 amperes and greater (see 3.1). The insulation resistance shall be a minimum of 1 megohm (wet) at the end of the tenth cycle, and a minimum of 100 megohms at the end of the 24-hour drying period, and there shall be no evidence of mechanical damage. Circuit breakers shall also meet the following requirements:

a. Dielectric withstanding voltage (see 3.6).

b. Calibration (see 3.9)

c. Seal (see 3.11).

d. Panel seal (see 3.12).

3.18 Thermal shock. When circuit breakers are tested as specified in 4.7.15, there shall be no evidence of mechanical damage.

3.19 Shock (specified pulse). When circuit breakers are tested as specified in 4.7.16, main circuit breaker contacts shall not trip. There shall be no closing of open main or auxiliary contacts, nor opening of closed main or auxiliary contacts in excess of 10 microseconds duration, nor shall there be any evidence of mechanical or electrical damage.

3.20 Trip-free calibration. When circuit breakers are tested as specified in 4.7.17, tripping times shall be as specified in 3.9. After the circuit breaker has tripped, the contacts shall not automatically return to the closed position even momentarily. Subsequent performance of the circuit breaker shall not be adversely affected. The auxiliary contacts shall indicate the main contact condition even when the lever is held in the closed position.

3.21 Salt spray (corrosion). When circuit breakers are tested as specified in 4.7.18, there shall be no evidence of excessive corrosion (see 3.3.1). Excessive corrosion is defined as that which interferes with the electrical or mechanical performance, or, in the case of plated metals, corrosion which has passed through the plating and attacked the base metal. There shall be no warping, cracking, or other damage to the circuit breaker. After the test, the mounting hardware shall be readily removable.

3.22 Barometric pressure (reduced). When circuit breakers are tested as specified in 4.7.19, the leakage current shall not exceed 0.1 milliampere and there shall be no evidence of flashover, mechanical damage, arcing, or breakdown.

3.23 Temperature rise. When circuit breakers are tested as specified in 4.7.20, they shall not trip, and the temperature rise of the terminals shall not exceed 25°C for 10.0-ampere breakers and below, and 35°C for breakers over 10.0 amperes.

Source: https://assist.dla.mil -- Downloaded: 2016-11-16T18:43Z
Check the source to verify that this is the current version before use.

3.24 Interrupting capacity. When tested as specified in 4.7.21 the following details apply.

a When tested as specified in 4.7.21(a), circuit breakers shall trip automatically and the indicating fuse shall not open. There shall be no dielectric breakdown, and when applicable (see 3.1 and 3.4.8.2), the auxiliary contacts shall operate, indicating position of the main contacts. Circuit breakers shall also meet the following requirements

(1) Dielectric withstanding voltage (see 3.6).

(2) Calibration at 200 percent of rated current (see 3.9).

(3) Insulation resistance (see 3.7).

(4) Seal (see 3.11).

b. When tested as specified in 4.7.21(b), there shall be no ignition of the cotton indicator, bulging or cracking open of the enclosure nor opening of the ground fuse. If the results of the first or second operation of the short circuit test are such that the circuit breaker is inoperable, but is otherwise intact as described above, the remaining operations need not be performed. The opening of the series fuse, welding of the contacts, inability of the circuit breaker to be reset, failure of auxiliary contacts to function, or the inability of the circuit breaker to trip the circuit shall not be considered unacceptable test results

3.25 Marking (see 3.1).

3 25.1 Identification marking. The following information shall be marked on the circuit breaker in accordance with MIL-STD-1285

a. Part number (see 3.1).

b. Current rating, voltage, and operating frequency (see 3.1).

c. Supplier's name or code symbol and date code.

d Circuit diagram using symbols in accordance with ANSI Y32.2-1970.

e. Terminals shall be permanently identified in accordance with figure 1. Terminals not used need not be identified.

3.25.2 Other marking. The main "LINE" terminal (see 6.6.2); and where applicable, the auxiliary contact terminals (see 3.4.8.2), shall be clearly and permanently marked on each unit.

3.25 3 Resistance to solvents. When circuit breakers are tested as specified in 4.7.1.1, the marking shall remain legible and there shall be no blistering or peeling in the marking area.

3.26 Workmanship. Circuit breakers shall be processed in such a manner as to be free from cracked or displaced parts, sharp edges, burrs, and other defects which will affect life, serviceability, or appearance.

4. QUALITY ASSURANCE PROVISIONS

4.1 Responsiblity for inspection. Unless otherwise specified in the contract or purchase order, the supplier is responsible for the performance of all inspection requirements as specified herein. Except as otherwise specified in the contract or order, the supplier may use his own or any other facilities suitable for the performance of the inspection requirements specified herein, unless disapproved by the Government. The Government reserves the right to perform any of the inspections set forth in the specification where such inspections are deemed necessary to assure supplies and services conform to prescribed requirements.

4.1.1 Responsibility for compliance. All items must meet all requirements of sections 3 and 5. The inspection set forth in this specification shall become a part of the contractor's overall inspection system or quality program The absence of any inspection requirements in the specification shall not relieve the contractor of the responsibility of assuring that all products or supplies submitted to the Government for acceptance comply with all requirements of the contract. Sampling in quality conformance does not authorize submission of known defective material, either indicated or actual, nor does it commit the Government to acceptance of defective material.

Source: https://assist.dla.mil -- Downloaded: 2016-11-16T18:43Z
Check the source to verify that this is the current version before use.

4.1.2 Test equipment and inspection facilities. Test and measuring equipment and inspection facilities of sufficient accuracy, quality, and quantity to permit performance of the required inspection shall be established and maintained by the supplier. The establishment and maintenance of a calibration system to control the accuracy of the measuring and test equipment shall be in accordance with MIL-STD-45662.

4.2 Classification of inspections The inspections specified herein are classified as follows.

a. Materials inspection (see 4.3).

b. Qualification inspection (see 4.5)

c. Quality conformance inspection (see 4.6).

4.3 Materials inspection Materials inspection shall consist of certification supported by verifying data that the materials listed in table III, used in fabricating the circuit breakers, are in accordance with the applicable referenced specifications or requirements prior to such fabrication.

TABLE III. Materials inspection.

Material	Requirement paragraph	Applicable specification
Metal plating	3.3.1	QQ-P-416
Fungus resistance	3.3.2	MIL-STD-454
Solder and solder flux	3.3.3	QQ-S-571 and MIL-F-14256

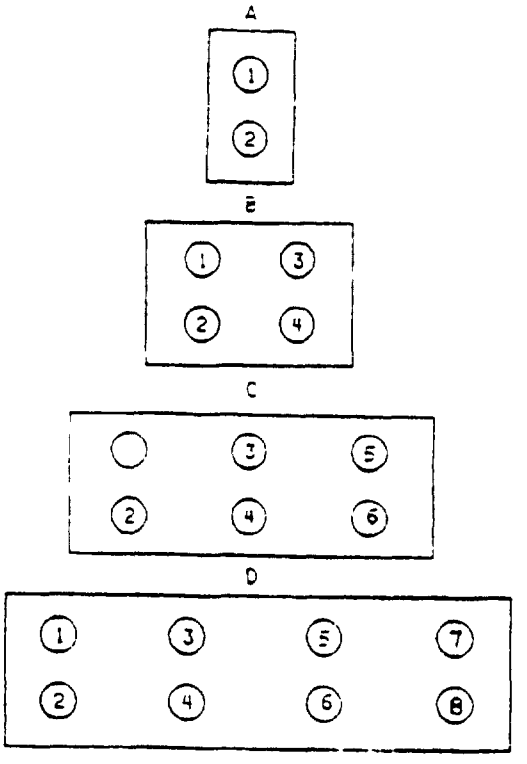

NOTE All views are rear face of circuit breaker with keyway up

FIGURE 1. Terminal symbols and identification numbers.

Source: https://assist.dla.mil -- Downloaded: 2016-11-16T18:43Z
Check the source to verify that this is the current version before use.

4.4 Inspection conditions. Unless otherwise specified herein, all inspections shall be performed in accordance with the test conditions specified in the "GENERAL REQUIREMENTS" of MIL-STD-202.

4.4.1 Power supply. Unless otherwise specified herein, the power supply shall have no more than 10 percent regulation at twice the specified load current. A dc power supply shall have no more than 5 percent voltage ripple. An ac power supply shall be within 1 percent of the specified frequency and shall be sinusoidal with a form factor between 0.95 and 1.25.

4.5 Qualification inspection. Qualification inspection shall be performed at a laboratory acceptable to the Government (see 6.3) on sample units produced with equipment and procedures normally used in production.

4.5.1 Sample size. The number of circuit breakers to be subjected to qualification inspection shall be as specified in the appendix to this specification.

4.5.2 Inspection routine. Sample units, grouped as specified in the appendix, shall be subjected to the qualification inspection specified in table IV, in the order shown. All 36 sample units shall be subjected to the inspection of group I. Then the 36 sample units shall be allocated as follows into six 6-unit groups, as specified in the appendix, and subjected to the inspection for their particular group.

Group II	-One 6-unit group covering the highest current rating.
Group III, IV, and V	-One 6-unit group each; each 6-unit group uniformly composed of circuit breakers at either the highest or lowest current rating at the option of the supplier.
Group VI	-One 6-unit group covering the highest current rating and one 6-unit group covering the lowest current rating.

4.5.2.2 Time delay C. Six sample units (three each at the highest and lowest current rating) shall be subjected to the inspection specified in table VI.

4.5.3 Failures. One or more failures shall be cause for refusal to grant qualification approval.

TABLE IV. Qualification inspection.

Examination or test	Requirement paragraph	Method paragraph
Group I (all sample units) 1/		
Visual and mechanical examination 2/ - - - - - - -	3.1, 3.3 to 3.4.15 incl, and 3.25 to 3.26, incl	4.7.1
Solderability (3 sample units only) - - - - - - - -	3.5	4.7.2
Dielectric withstanding voltage - - - - - - - - - -	3.6	4.7.3
Insulation resistance - - - - - - - - - - - - - - -	3.7	4.7.4
Resistance or impedance - - - - - - - - - - - - - -	3.8	4.7.5
Calibration -	3.9	4.7.6.1
Level strength- - - - - - - - - - - - - - - - - - -	3.10.1	4.7.7.1
Lever operating force - - - - - - - - - - - - - - -	3.10.2	4.7.7.2
Seal- -	3.11	4.7.8
Panel seal- -	3.12	4.7.9
Resistance to solvents (4 sample units only)- - - -	3.25.3	4.7.1.1
Group II (6 sample units)		
High- and low-temperature operation - - - - - - - -	3.13	4.7.10
Endurance -	3.14	4.7.11
Group III (6 sample units)		
Terminal strength - - - - - - - - - - - - - - - - -	3.15	4.7.12
Vibration, high frequency - - - - - - - - - - - - -	3.16	4.7.13
Moisture resistance - - - - - - - - - - - - - - - -	3.17	4.7.14

See footnotes at end of table.

Source: https://assist.dla.mil -- Downloaded: 2016-11-16T18:43Z
Check the source to verify that this is the current version before use.

TABLE IV. Qualification inspection - Continued.

Examination or test	Requirement paragraph	Method paragraph
Group IV (6 sample units)		
Thermal shock	3.18	4.7.15
Shock (specified pulse)	3.19	4.7.16
Moisture resistance	3.17	4.7.14
Group V (6 sample units) 3/		
Trip-free calibration	3.20	4.7.17
Salt spray (corrosion)	3.21	4.7.18
Barometric pressure (reduced)	3.22	4.7.19
Group VI (12 sample units)		
Temperature rise	3.23	4.7.20
Interrupting capacity	3.24	4.7.21

1/ Nondestructive examinations and tests.
2/ Dimensional measurements will be made on two units only.
3/ After completion of group V tests, one circuit breaker of the group shall be opened and examined internally in accordance with 4.7.1.

4.5.4 Retention of qualification.

4.5.4.1 Method. To retain qualification, the contractor shall forward a report at 12-month intervals to the qualifying activity. The qualifying activity shall establish the initial reporting date. The report shall consist of

a. A summary of the results of the tests performed for inspection of product for delivery (group A), indicating as a minimum the number of lots that have passed and the number that have failed, including the number and type of part failures The results of tests of all reworked lots shall be identified and accounted for.

b A summary of the results of inspection performed for retention of qualification, including the number and mode of failures. The summary shall include results of all retention of qualification inspection tests performed and completed during the 12-month period The inspection shall consist of the examinations and tests specified in table V in the order shown If the summary of the test results indicates nonconformance with specification requirements, and corrective action acceptable to the qualifying activity has not been taken, action may be taken to remove the failing product from the qualified products list (see 4.5 4.3).

Failure to submit the report within 30 days after the end of each 12-month period may result in loss of qualification for the product. In addition to the periodic submission of inspection data, the contractor shall immediately notify the qualifying activity at any time during the 12-month period that the inspection data indicates failure of the qualified product to meet the requirements of this specification

In the event that no production occurred during the reporting period, a report shall be submitted certifying that the company still has the capabilities and facilities necessary to produce the item If during two consecutive reporting periods there has been no production, the manufacturer may be required, at the discretion of the qualifying activity, to submit a representative product of the highest and lowest current rating covered by each major design set to testing in accordance with the qualification inspection requirements.

Source: https://assist.dla.mil -- Downloaded: 2016-11-16T18:43Z
Check the source to verify that this is the current version before use.

4.5.4.2 Failures. If one or more sample units fail to pass retention of qualification inspection, the sample shall be considered to have failed.

4.5.4.3 Disposition of sample units. Sample units which have been subjected to the inspections in table V shall not be delivered on the contract or order.

TABLE V. Retention of qualification inspection.

Inspection	Military part number	Requirement paragraph	Test method paragraph	Number of samples
Lever strength, operating force and shock (1st quarter)	M39019/02-200	3.10.1, 3.10.2, 3.19	4.7.7.1, 4.7.7.2, 4.7.16	1
	M39019/02-257			1
	M39019/04-301	"		1
"	M39019/04-339	"	"	1
"	M39019/06-202	"	"	1
"	M39019/06-259	"	"	1
Solderability and vibration (2nd quarter)	M39019/02-301	3.5, 3.16	4.7.2, 4.7.13	1
	M39019/02-339	"		1
"	M39019/04-200	"	"	1
"	M39019/04-257	"	"	1
"	M39019/06-202	"	"	1
"	M39019/06-259	"	"	1
Trip-free calibration and salt spray (3rd quarter)	M39019/02-202	3.20, 3.21	4.7.17, 4.7.18	1
	M39019/02-259	"		1
"	M39019/04-202	"	"	1
"	M39019/04-259	"	"	1
"	M39019/06-300	"	"	1
"	M39019/06-338	"	"	1
See footnote 1/	M39019/02-200	3.13, 3.14, 3.17, 3.23	4.7.10, 4.7.11, 4.7.14, 4.7.20, 4.7.21	1
	M39019/02-257			1
	M39019/04-301	3.24		1
	M39019/04-339	"		1
	M39019/06-202	"		1
	M39019/06-259	"	"	1

1/ High-low temperature operation and endurance shall be performed the 4th quarter of the first year, moisture resistance shall be performed the 4th quarter of the second year, and temperature rise and interrupting capacity shall be performed the 4th quarter of the 3rd year, after the third year, the sequence repeats.

4.6 Quality conformance inspection.

4.6.1 Inspection of product for delivery. Inspection of product for delivery shall consist of group A inspection.

4.6.1.1 Inspection lot. An inspection lot shall consist of all the circuit breakers covered by a single specification sheet produced under essentially the same conditions, and offered for inspection at one time. In addition, circuit breakers, similar in design and number of poles except for the presence of auxiliary contact terminals, may be combined to form a lot, provided that a proportional quantity of sample units with and without auxiliary contact terminals are incorporated into the sample.

4.6.1.1.1 Group A inspection. Group A inspection shall consist of the examinations and tests specified in table VI, in the order shown.

Source: https://assist.dla.mil -- Downloaded: 2016-11-16T18:43Z
Check the source to verify that this is the current version before use.

4.6.1.1.1.1 Sampling plan. Statistical sampling and inspection shall be in accordance with MIL-STD-105 for general inspection level II. The acceptable quality level (AQL) shall be as specified in table VI. Major and minor defects shall be as defined in MIL-STD-105.

TABLE VI. Group A inspection.

Examination or test	Requirement paragraph	Method paragraph	AQL (percent defective) max. acceptable	
			Major	Minor
Visual and mechanical examination				
Dimensions (two units only) - - - - -	3.1, 3.4			
Marking - - - - - - - - - - - - - - - -	3.24	4.7.1	1.0	4.0
Workmanship - - - - - - - - - - - - - -	3.25			
Dielectric withstanding voltage - - - -	3.6	4.7.3		
Insulation resistance - - - - - - - - -	3.7	4.7.4		
Resistance or impedance - - - - - - - -	3.8	4.7.5	1.0	---
Calibration (concurrently with resistance or impedance test)- - - - - - - - - -	3.9	4.7.6.2		
Seal- - - - - - - - - - - - - - - - - - -	3.11	4.7.8		

4.6.1.1.2 Rejected lots. If an inspection lot is rejected, the supplier may rework it to correct the defects, or screen out the defective units, and resubmit for reinspection. Resubmitted lots shall be inspected using tightened inspection. Such lots shall be separate from new lots, and shall be clearly identified as reinspected lots.

4.6.1.1.3 Disposition of sample units. Sample units which have passed all the group A inspection may be delivered on the contract or purchase order, if the lot is accepted and the sample units are still within specified electrical tolerances.

4.6.2 Qualification verification inspection. Qualification verification inspection shall consist of group B. Except where the results of these inspections show noncompliance with the applicable requirements (see 4.6.2.1.4), delivery of products which have passed group A shall not be delayed pending the results of these qualification verification inspections.

4.6.2.1 Group B inspection. Group B inspection shall consist of the examinations and tests specified in table IV, in the order shown. Group B inspection shall be made on sample units selected from inspection lots which have passed the group A inspection. Contractors that have successfully retained the qualification products listing in accordance with 4.5.4 shall not be required to perform group B inspection.

4.6.2.1.1 Sampling plan. Eighteen sample units shall be selected from those covered by a single specification sheet, 24 months after the date of notification of qualification, and after each subsequent 24-month period. When periodic inspection is performed for circuit breakers covered by two specification sheets which are identical, except that one covers circuit breakers with auxiliary contact terminals, equal quantities of sample units with and without auxiliary contacts shall be selected. The 18 sample units shall be composed of six groups of three each. Each three unit group shall be composed of circuit breakers specified by the qualifying activity.

4.6.2.1.2 Failures. If one or more sample units fail to pass group B inspection, the sample shall be considered to have failed.

4.6.2.1.3 Disposition of sample units. Sample units which have been subjected to group B inspection shall not be delivered on the contract or order.

4.6.2.1.4 Noncompliance If a sample fails to pass group B inspection, the supplier shall take corrective action on the materials or processes, or both, as warranted, and on all units of product which can be corrected and which were manufactured under essentially the same conditions, with essentially the same materials, processes, etc., and which are considered subject to the same failure Acceptance of the product shall be discontinued until corrective action, acceptable to the Government has been taken. After the corrective action has been taken, group B inspection shall be repeated on additional sample units (all inspection, or the inspection which the original sample

Source: https://assist.dla.mil -- Downloaded: 2016-11-16T18:43Z
Check the source to verify that this is the current version before use.

failed, at the option of the Government). Group A inspection may be reinstituted; however, final acceptance shall be withheld until the group B reinspection has shown that the corrective action was successful. In the event of failure after reinspection, information concerning the failure and the corrective action taken shall be furnished to the cognizant inspection activity and the qualifying activity.

4.6.3 Inspection of packaging The sampling and inspection of the preservation and interior pack marking shall be in accordance with the group A and B quality conformance inspection requirements of MIL-P-116. The sampling and inspection of the packing and marking for shipment and storage shall be in accordance with the quality assurance provisions of the applicable container specification and the marking requirements of MIL-STD-129.

4.7 Method of examination and test.

4.7.1 Visual and mechanical examination. Circuit breakers shall be examined to verify that dissimilar metals, design, construction, physical dimensions, marking, and workmanship are in accordance with the applicable requirements (see 3.1, 3.3 to 3.4.15, inclusive and 3.25 to 3.26, inclusive).

4.7.1.1 Resistance to solvents (see 3.25.3). Circuit breakers shall be tested to the resistance to solvents test, method 215 of MIL-STD-202. The following details and exceptions shall apply.

a. Portion to be brushed All marking.

b. Number of specimens to be tested. Four, two in solution of 2.1(a) and two in solution of 2.1(b).

c. Examination. Specimens shall be examined for legibility of marking.

4.7.2 Solderability (see 3.5) Circuit breakers shall be tested in accordance with method 208 of MIL-STD-202. The following details and exceptions shall apply:

a. Number of terminations to be tested - All terminals of each circuit breaker tested

b. Examination of terminations - Method for evaluation of lugs and tabs shall apply.

4.7.3 Dielectric withstanding voltage (see 3.6). Circuit breakers shall be tested in accordance with method 301, MIL-STD-202. The following details shall apply.

a. Magnitude of test voltage: 1,250 volts (rms), for points of application (c)(1), (2), and (3); 500 volts (rms), for points of application (c)(4) and (5).

   Magnitude of test voltage may be increased to 1,500 volts (rms) for points of application c(1), (2) and (3) and 600 volts (rms) for points of application c(4) and (5). The time for this application is 1 second.

b. Nature of potential AC.

c. Points of application of test voltage:

   (1) Between all main circuit breaker terminals tied together and actuating lever and case tied together, with circuit breaker main contacts in closed, open, and tripped-free positions.

   (2) Between all auxiliary contact terminals tied together and main circuit breaker terminals tied together, with circuit breaker main contacts in closed, open, and tripped-free positions.

   (3) Between poles of multiple pole breakers with the line terminal of each pole tied to the corresponding load terminal of that pole, with circuit breaker main contacts in closed, open, and tripped-free positions.

   (4) Between all auxiliary contact terminals tied together and actuating lever and and case tied together, with circuit breaker main contacts in closed and open positions.

Source: https://assist.dla.mil -- Downloaded: 2016-11-16T18:43Z
Check the source to verify that this is the current version before use.

(5) Between each open pair of auxiliary contact terminals, with circuit breaker main contacts in closed and open positions.

(6) Optional points of application: When test is specified to all main circuit breaker terminals tied together, the test may be applied to individual poles.

d. Measurement during test Leakage current shall be measured.

e. Examination after test: Circuit breakers shall be examined for evidence of flashover, mechanical damage, arcing, breakdown, and excessive current flow.

4.7.4 Insulation resistance (see 3.7). Circuit breakers shall be tested in accordance with method 302 of MIL-STD-202. The following details shall apply

a. Test condition: A.

b. Point of measurement.

(1) Between all main circuit breaker terminals tied together and actuating lever and case tied together, with circuit breaker main contacts in closed, open, and tripped-free positions.

(2) Between all auxiliary contact terminals tied together and main circuit breaker terminals tied together, with circuit breaker main contacts in closed, open, and tripped-free positions.

(3) Between poles of multiple pole breakers with the line terminal of each pole tied to the corresponding load terminal of that pole, with circuit breaker main contacts in closed, open, and tripped-free positions.

(4) Between all auxiliary contact terminals tied together and actuating lever and case tied together, with circuit breaker main contacts in closed and open positions.

(5) Between each open pair of auxiliary contact terminals, with circuit breaker main contacts in closed and open positions.

(6) Optional points of application: When test is specified to all main circuit breaker terminals tied together, the test may be applied to individual poles.

4.7.5 Resistance or impedance (see 3.8). Circuit breakers shall be tested as follows.

a. Main contacts: Resistance or impedance shall be measured between the main contact terminals of each pole at 100 percent of rated current using the voltmeter-ammeter method. The samples shall be divided as evenly as possible (with respect to current rating) into three groups for testing at the following voltages and frequencies: 50 V dc, 240 V ac at 60 Hz, and 240 V ac at 400 Hz. Measurements shall be made after the circuit breaker has been subjected to 100 percent of rated current and the applicable frequency for 1 hour.

b. Auxiliary contacts. Auxiliary contact resistance shall be measured using the voltmeter-ammeter method using a 20 volt AC or DC source with limiting resistance to 0.5 ampere. The initial measurement shall be made in the 'as received' condition.

4.7.6 Calibration (see 3.9).

4.7.6.1 Method I.

4.7.6.1.1 Time delays A and B. Circuit breakers shall be mounted by their normal mounting means and tested in each of three mutually perpendicular positions. Circuit breakers shall be connected as shown on figure 2 and conditioned for 1 hour at 100 percent of rated current. Tripping times shall then be measured when circuit breakers are subjected to the following percentages of applied rated current 100, 135, 200, 400, 600, and 800. The sample units shall be divided as evenly as possible (with respect to current rating and time delay) into three groups for testing at the following voltages and frequencies: 50 V dc, 240 V ac at 60 Hz, and 240 V ac at 400 Hz. There shall be sufficient time (not less than 10 minutes) between each application of current to permit proper cooling of the circuit breaker. Circuit breakers rated for high inrush shall also be mounted in

Source: https://assist.dla.mil -- Downloaded: 2016-11-16T18:43Z
Check the source to verify that this is the current version before use.

three mutually perpendicular directions and while mounted in each position shall be subjected to one alternation of a 60 Hz waveform the peak value of which is 800 percent of the RMS and DC rated load current and one alternation of a 400 Hz waveform the peak value of which is 1400 percent of the RMS and DC rated load current. Normally tests shall be conducted within the rated operating voltage. However, if the inherent resistance or impedance of the circuit breaker precludes attainment of the required percentages of overload current at the rated operating voltage, for the purpose of determining tripping times and high inrush capabilities, the voltage shall be increased as necessary, up to a maximum of 40 percent. If the specified overload current cannot be obtained with a maximum increase in voltage of 40 percent, tests of these particular overload levels shall be omitted. Each section of multipole breakers shall be subjected to the calibration current specified, with remaining pole or poles passing no current.

4.7.6.1.2 Time delay C. Circuit breakers shall be tested as specified in 4.7.6.1.1, except the circuit breakers shall only be subjected to 100, 135, and 200 percent of rated current.

4.7.6.2 Method II.

4.7.6.2.1 Time delays A and B. Circuit breakers shall be tested as specified in 4.7.6.1.1, except the circuit breakers shall be tested when mounted in the vertical plane only and only 100, 135, and 200 percent of rated current shall be applied. Circuit breakers rated for high inrush shall be subjected to one alternation of the 60 Hz waveform and one alternation of the 400 Hz waveform, (see 3.1).

4.7.6.2.2 Time delay C. Circuit breakers shall be tested as specified in 4.7.6.1.2, except the circuit breakers shall be tested when mounted in the vertical plane only.

4.7.7 Actuating lever (see 3.10).

4.7.7.1 Lever strength (see 3.10.1). Circuit breakers shall have a 10-pound load applied to the tip of the actuating lever for 1 minute under each of the following conditions.

a. Normal to the lever axis in the plane of lever travel at each extreme position of the lever.

b. Normal to the lever axis and normal to the plane of lever travel at each extreme position of the lever.

c. Coaxial with the lever axis toward the lever pivot throughout the entire range of lever travel.

d. Coaxial with the lever axis away from the lever pivot throughout the entire range of lever travel.

Circuit breakers shall be examined for evidence of mechanical damage.

4.7.7.2 Lever operating force (see 3.10.2). The force necessary to operate the actuating lever shall be applied in both operating directions at the rounded tip of the lever. The force shall be applied normal to the lever axis and in the plane of lever travel. The magnitude of the force required to operate the lever shall be determined.

4.7.8 Seal (see 3.11). Circuit breakers shall be immersed to a depth not exceeding 10 inches in tap water containing a wetting agent. The absolute pressure of the air above the water shall then be reduced to 2.5 inches of mercury and maintained for 1 minute or until air bubbles cease to flow, whichever is longer. During immersion, observation shall be made for any visible air bubbles indicative of leakage, emanating from the circuit breakers, either in the form of a continuous stream, or as bubbles emanating at regular intervals. Bubbles which are determined to be the result of entrapped air on the exterior parts of the immersed circuit breakers shall not be considered a leak.

4.7.9 Panel seal (see 3.12). Circuit breakers shall be secured by their normal mounting means to a suitable test jig. A suggested test jig is shown on figure 3. The test jig shall be immersed in a water-filled glass container containing a wetting agent, with the circuit breaker completely submerged. An air pressure of 15 pounds per square inch shall be applied to the test jig for approximately 1/2 hour. The circuit breaker and connection to the test jig shall be observed for any visible air bubbles indicative of leakage, either in the form of a continuous stream, or as bubbles emanating at regular intervals. The test shall then be repeated by applying air pressure in the opposite direction by reversing the cover.

Source: https://assist.dla.mil -- Downloaded: 2016-11-16T18:43Z
Check the source to verify that this is the current version before use.

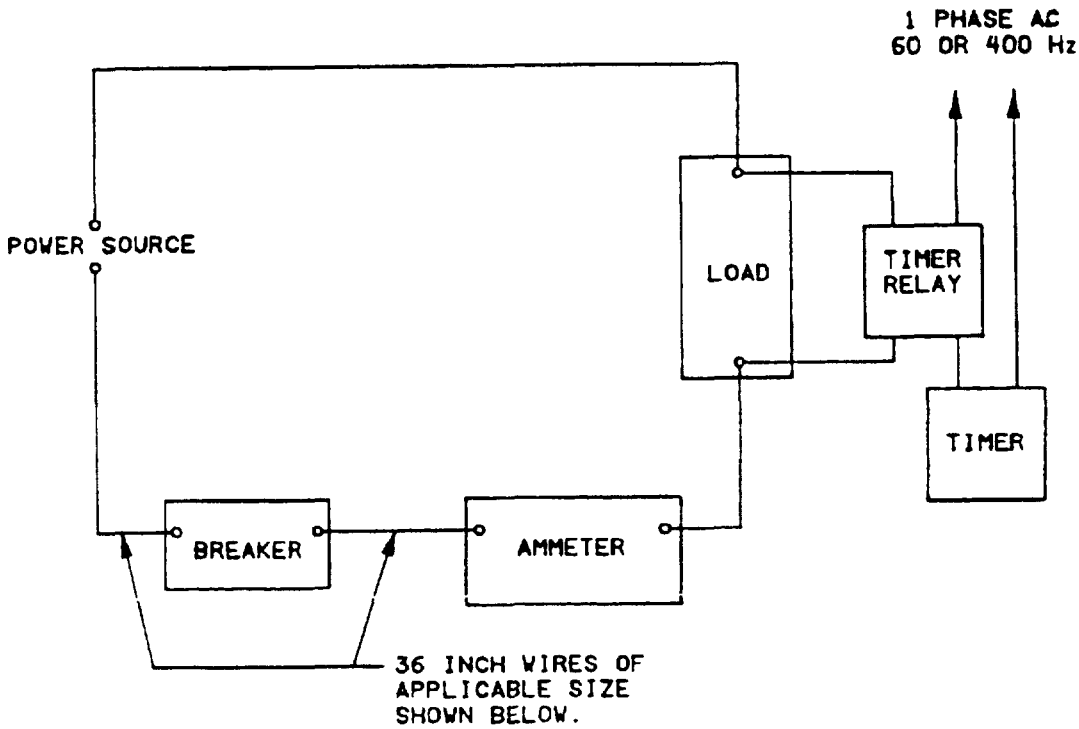

Circuit-breaker capacity (amperes)	Wire size (AWG designation)
Less than 6	18
7 to 10 incl	16
11 to 15 incl	14
16 to 20 incl	12

Ammeter: Accuracy within .5 of 1 percent.

FIGURE 2 Calibration-test circuit

Source: https://assist.dla.mil -- Downloaded: 2016-11-16T18:43Z
Check the source to verify that this is the current version before use.

4.7.10 High- and low-temperature operation (see 3.13). Circuit breakers shall be conditioned for 2 hours at -40° ±2°C, at which temperature the calibration test shall be performed in accordance with 4.7.6.2. Without a warming period, circuit breakers shall then be conditioned for 1 hour at -55° to ±2°C at which temperature the calibration test shall be performed in accordance with 4.7.6.2, except the percent of current needed to trip the circuit breaker shall be 150 instead of 135. While still maintained at -55°C to ±2°C, the insulation resistance test shall be performed in accordance with 4.7.4. Circuit breakers shall then be conditioned for 2 hours at 100°C ±2°C, at which temperature the calibration test shall be performed in accordance with 4.7.6.2. While still maintained at 100°C ±2°C, the dielectric withstanding voltage and insulation resistance tests shall be performed in accordance with 4.7.3 and 4.7.4, respectively. Circuit breakers shall be examined for evidence of mechanical damage. Circuit breakers shall then be subjected to the seal test and panel seal test in accordance with 4.7.8 and 4.7.9, respectively.

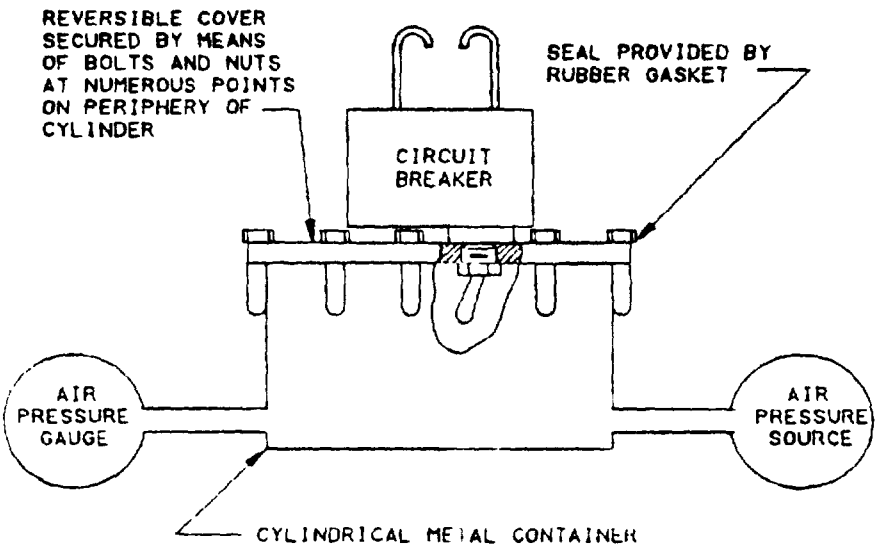

FIGURE 3. Suggested test jig for panel-seal test.

4.7.11 Endurance (see 3.14). Circuit breakers shall be subjected to 10,000 mechanically performed make and break operations with the circuit breaker energized to 100 percent of rated current, at 240 V ac, 400 Hz throughout the cycling period, at a rate not to exceed six operations per minute. Half of the sample units shall be tested with the specified inductive load and half with the specified resistive load (see 4.7.11.1).

Circuit breakers shall be connected as shown in the following diagram.

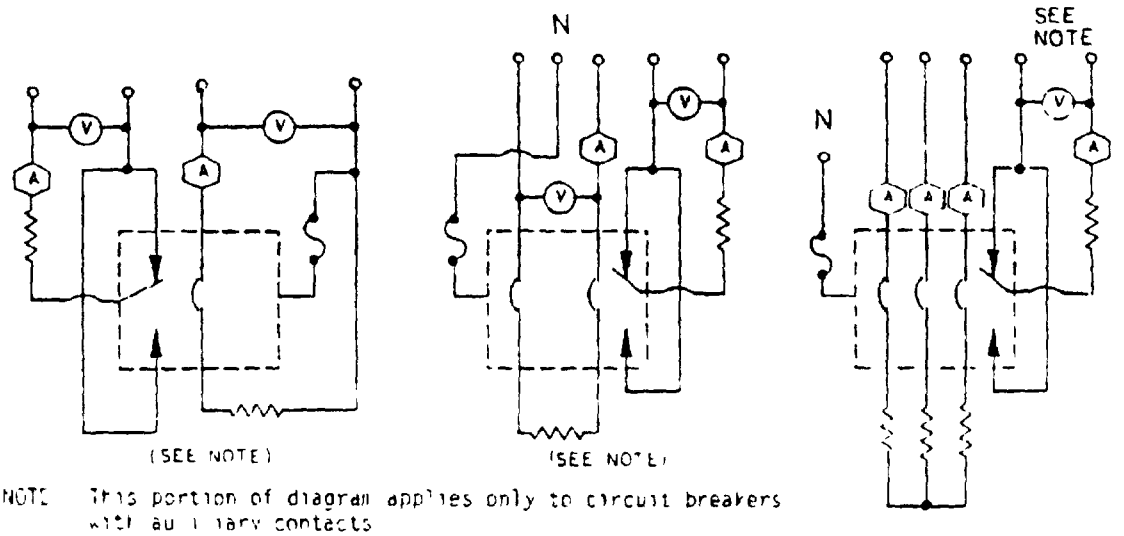

NOTE: This portion of diagram applies only to circuit breakers with auxiliary contacts

Source: https://assist.dla.mil -- Downloaded: 2016-11-16T18:43Z
Check the source to verify that this is the current version before use.

Each pole of multiple breakers shall be simultaneously subjected to the required load. When applicable, the auxiliary contacts shall also make and break the specified load (see 3.4.8.2). An operating cycle is defined as the mechanical closing and opening of the breaker, and the ratio of 'on' time to "off" time shall be less than 1 to 5. The mechanical operation shall simulate manual operation of the breaker, including overtravel, if any (see 6.5.4). All exposed metal parts of the circuit breaker, except terminals, shall be maintained at the power source ground or neutral through a normal-blow fuse rated at 5 percent of the test load or 100 milliamperes, whichever is greater. Connection to the circuit breaker shall be made to one side of the power source for half of the cycles, and to the other side for the other half of the cycles. The fuse shall be observed during the test to determine if failure occurs prior to conclusion of the test. Circuit breakers shall be examined for evidence of mechanical damage or loosening of parts. Following the test, circuit breakers shall be subjected to the following tests:

a. Dielectric withstanding voltage (see 4.7.3).

b. Insulation resistance (see 4.7.4).

c. Calibration (see 4.7.6.2).

d. Seal (see 4.7.8).

e. Auxiliary contact resistance (see 4.7.5(b)). Contact resistance shall not exceed 0.4 ohm.

4.7 11.1 Loads. For ac inductive loads, the power factor shall be 0.75 to 0.80. For ac resistive loads, the power factor shall be between 0.90 and unity.

4 7.12 Terminal strength (see 3.15). Circuit breakers shall be tested in accordance with method 211 of MIL-STD-202. The following details and exception shall apply.

a. Test condition A.

b. Applied force Main contact terminals - 4-1/2 pounds. Auxiliary contact terminals - 2 pounds.

c. Direction of force: Parallel to the longitudinal axis of the terminal, perpendicular to the longitudinal axis of the terminal, or in any other direction deemed most likely to cause failure. However, no terminal shall be tested in more than one direction.

d. Examinations after test Circuit breakers shall be subjected to the seal test (see 4.7.8), and shall be examined to verify compliance with 3.15.

4 7.13 Vibration, high frequency (see 3.16). Circuit breakers shall be tested in accordance with method 204 of MIL-STD-202. The following details and exception shall apply:

a. Tests and measurements prior to vibration. Not applicable.

b. Test condition C.

c. Mounting method. Normal mounting means.

d. Electrical-load conditions: Half the circuit breakers shall be tested with the main contacts closed, while energized at 100 percent of rated current, at 12 volts dc. The other half of the circuit breakers shall be tested with the main contacts open and unenergized.

e. Measurements during vibration: Each circuit breaker shall be monitored to determine opening or closing of contacts in the "on" and "off" position.

f. Examination after vibration Circuit breakers shall be examined for evidence of mechanical and electrical damage.

Source: https://assist.dla.mil -- Downloaded: 2016-11-16T18:43Z
Check the source to verify that this is the current version before use.

4.7.14 Moisture resistance (see 3.17). Circuit breakers shall be tested in accordance with method 106, MIL-STD-202. The following details and exceptions shall apply:

a. Mounting: Mounted horizontally on a nickel-plated brass panel.

b. Initial measurements: Immediately following the initial drying period, resistance or impedance shall be measured as specified in 4.7.5.

c. Electrical-load conditions During the first 2 hours of steps 1 and 4, circuit breakers shall be energized at 100 percent of rated current, at 240 V ac, 400 Hz.

d. Steps 7a and 7b are not applicable.

e. Final measurements: Upon completion of the 10th cycle and while still in the humidity chamber, insulation resistance and resistance or impedance shall be measured as specified in 4.7.4 and 4.7.5, respectively. After the 24-hour drying period, insulation resistance shall again be measured as specified in 4.7.4.

f. Examination after test: Examine for evidence of breaking, cracking, spalling, or loosening of terminals.

g. Tests after moisture resistance test: Circuit breakers shall be subjected to the following tests:

(1) Dielectric withstanding voltage (see 4.7.3).

(2) Calibration (see 4.7.6.2).

(3) Seal (see 4.7.8).

(4) Panel seal (see 4.7.9).

4.7.15 Thermal shock (see 3.18). Circuit breakers shall be tested in accordance with method 107 of MIL-STD-202. The following details shall apply:

a. Mounting: Normal mounting means and in such a manner that there is at least 1 inch of free air space around each circuit breaker.

b. Test condition: B.

c. Examination after cycling: Circuit breakers shall be examined for evidence of mechanical damage.

4.7.16 Shock (specified pulse)(see 3.19). Circuit breakers shall be tested in accordance with method 213 of MIL-STD-202. The following details shall apply.

a. Mounting method Normal mounting means.

b. Test condition: I.

c. Electrical-load conditions and measurements: Of the three shocks in each direction required, two shocks shall be performed with the circuit breaker energized at 100 percent of rated current, at 12 volts dc, except that for the directions with the operating lever pivot up (table mount) and the operating lever pivot down (ceiling mount), no voltage or current shall be applied. Each energized shock shall be monitored to determine opening of the main or auxiliary circuit breaker contacts. The remaining shock in each direction shall be performed with the circuit breaker contacts open and unenergized and shall be performed with the circuit breaker contacts open and unenergized and shall be monitored to determine closing of the main or auxiliary contacts.

d. Examination after shock: Circuit breakers shall be examined for evidence of mechanical and electrical damage.

4.7.17 Trip-free calibration (see 3.20). The circuit breaker lever shall be physically held in the closed position and the breaker subjected to the calibration test as specified in 4.7.6.1

Source: https://assist.dla.mil -- Downloaded: 2016-11-16T18:43Z
Check the source to verify that this is the current version before use.

4.7.18 Salt spray (corrosion)(see 3.21). Circuit breakers shall be tested in accordance with method 101 of MIL-STD-202. The following details shall apply:

a. Test condition: B.

b. Examination after exposure: The mounting hardware shall be removed at the conclusion of the test. Circuit breakers shall be examined for corrosion or evidence of mechanical and electrical damage.

c. Tests after salt spray test: None.

4.7.19 Barometric pressure (reduced)(see 3.22). Circuit breakers shall be tested in accordance with method 105 of MIL-STD-202. The following details apply:

a. Test condition: B.

b. Tests during subjection to reduced pressure: Dielectric withstanding voltage shall be performed as specified in 4.7.3, except the magnitude of test voltage shall be 500 volts (rms) for all points of application.

c. Examination after tests: As specified in 4.7.3(e).

4.7.20 Temperature rise (see 3.23). Circuit breakers shall be connected with not less than 4 feet of No. 16 wire for ratings up to 5 amperes, No. 14 for ratings of 5 through 15 amperes, and No. 12 for ratings above 15 amperes. Connections to the circuit breaker terminals shall be soldered. The temperature rise of the terminals shall be determined by the use of a thermocouple with a 0.0100-inch diameter (No. 30 AWG), or smaller wire. The thermocouple shall be cemented to the terminals, using minimum quantity of cement. One hundred percent rated current shall be applied to circuit breakers for 1 hour. Circuit breakers shall not trip, and the terminal temperature rise shall not exceed the values specified in 3.23.

4.7.21 Interrupting capacity (see 3.24). Three of the sample units (one sample unit for retention of qualification) of the highest current rating shall be subjected to part (b) and the remaining units to part (a).

a. Circuit breakers shall be operated through interrupting cycles (ac or dc, as applicable) as specified herein. Circuit breakers shall be connected to the power source so that the applicable short circuit current specified below, at the corresponding open circuit voltage and frequency specified, is provided at the circuit breaker terminals. The power factor shall be 75 to 80 percent for the 60 and 400 Hz tests. When the dc source is rectified ac, the applicable requirements of Underwriters' laboratories (UL) 1077 shall apply.

(1) 500 amperes at 50 ±2 V dc.

(2) 300 amperes at 240 ±5 V ac, 60 or 400 Hz, as applicable.

The sample units shall be divided as evenly as possible (with respect to time delay) into three groups. One group shall be tested at 50 V dc, one at 240 V ac, 60 Hz and one at 240 V ac 400 Hz. The test circuit of figure 4 may be used as a guide and the two methods of interrupt as shown (designated by symbols "CO" and "OCO") shall apply. The circuit diagrams of figure 5 shall be used for the actual hook-up of circuit breakers under test. For dc operation, the circuit breakers shall be subjected to two operations (with all poles connected in the circuit), in which the circuit breaker is closed before initiation of the short circuit current (Symbol "CO"), followed by one operation in which the fault is initiated first, and the circuit breaker is closed-in to complete the fault (symbol "OCO"). For ac operations, single-pole breakers shall be subjected to three operations in the following order: "CO," "OCO", "CO." For multiple pole breakers each pole shall be subjected to one "CO" operation. This shall be followed by one "OCO" and one "CO" operation with all poles connected in the circuit. After each interrupt, the open-circuit voltage specified shall be maintained across the breaker for a minimum of 5 seconds. There shall be sufficient time between each operation (not less than 10 minutes) to permit proper cooling of the circuit breaker. Circuit breakers that are not capable of being mechanically and electrically reset within 10 minutes shall be

Source: https://assist.dla.mil -- Downloaded: 2016-11-16T18:43Z
Check the source to verify that this is the current version before use.

rejected. The circuit breakers shall be observed for automatic tripping and satisfactory operation of the auxiliary contacts. Following the last operation, circuit breakers shall be subjected to the following tests:

a. Dielectric withstanding voltage (see 4.7.3).

b. Calibration at 200 percent of rated current (see 4.7.6.2).

c. Insulation resistance (see 4.7.4).

d. Seal (see 4.7.8).

b. Circuit breakers shall be subjected to 1,000 amperes at 50 V dc and 240 V ac, 60 and 400 Hz in accordance with the applicable requirements of UL1077. This test need not be performed when UL recognition for this rating is in effect for the highest current rating being qualified.

5. PACKAGING

5.1 Preservation. Preservation shall be level A, B, or C, as specified (see 6.2).

5.1.1 Level A.

5.1.1.1 Cleaning. Circuit breakers shall be cleaned in accordance with MIL-P-116, process C-1.

5.1.1.2 Drying. Circuit breakers shall be dried in accordance with MIL-P-116.

5.1.1.3 Preservation application. Preservatives shall not be used.

5.1.1.4 Unit packs. Each circuit breaker shall be individually unit packed in accordance with submethod IA-8 of MIL-P-116 insuring compliance with the applicable requirements of that specification. Two-pole and three-pole circuit breakers shall be additionally placed in a supplementary container conforming to variety 2 of PPP-B-566 or PPP-B-676.

5.1.1.5 Intermediate packs. Circuit breakers, unit packed as specified in 5.1.1.4, shall be placed in intermediate containers conforming to variety 2 of PPP-B-566 or PPP-B-676 or class weather resistant of PPP-B-636. Intermediate containers shall be uniform in size, shape, and quantities, shall be of minimum tare and cube, and shall contain multiples of five unit packs not to exceed 100 unit packs. No intermediate packs are required when the total quantity shipped to a single destination is less than 100 unit packs or when supplementary containers are used.

5.1.2 Level B. The requirements for level B shall be specified for level A except that submethod IC-1 or IC-3 of MIL-P-116 shall be substituted for submethod IA-8 and any variety of the supplementary and intermediate containers specified may be used (see 5.1.1.4).

5.1.3 Level C. The level C preservation of circuit breakers shall conform to the MIL-STD-2073-1 requirements for this level.

5.2 Packing. Packing shall be level A, B, or C, as specified (see 6.2).

5.2.1 Level A. Circuit breakers, preserved as specified in 5.1, shall be packed in wood boxes conforming to PPP-B-601, overseas type or PPP-B-621, class 2. Closure and strapping shall be in accordance with applicable container specification except that metal strapping shall conform to QQ-S-781, type 1, finish A. The requirements for level B packing shall be used when the total quantity of a stock numbered circuit breaker for a single destination does not exceed a packed volume of one cubic foot (0.0283 cubic meter).

5.2.2 Level B. Circuit breakers, preserved as specified in 5.1, shall be packed in fiberboard containers conforming to PPP-B-636, class weather resistant, style optional, special requirements. The requirements for box closure, waterproofing, and reinforcing shall be in accordance with method V of the PPP-B-636 appendix.

5.2.3 Level C. Circuit breakers, preserved as specified in 5.1, shall be packed in fiberboard containers conforming to PPP-B-636, class domestic, style optional, special requirements. Closures shall be in accordance with the appendix thereto.

Source: https://assist.dla.mil -- Downloaded: 2016-11-16T18:43Z
Check the source to verify that this is the current version before use.

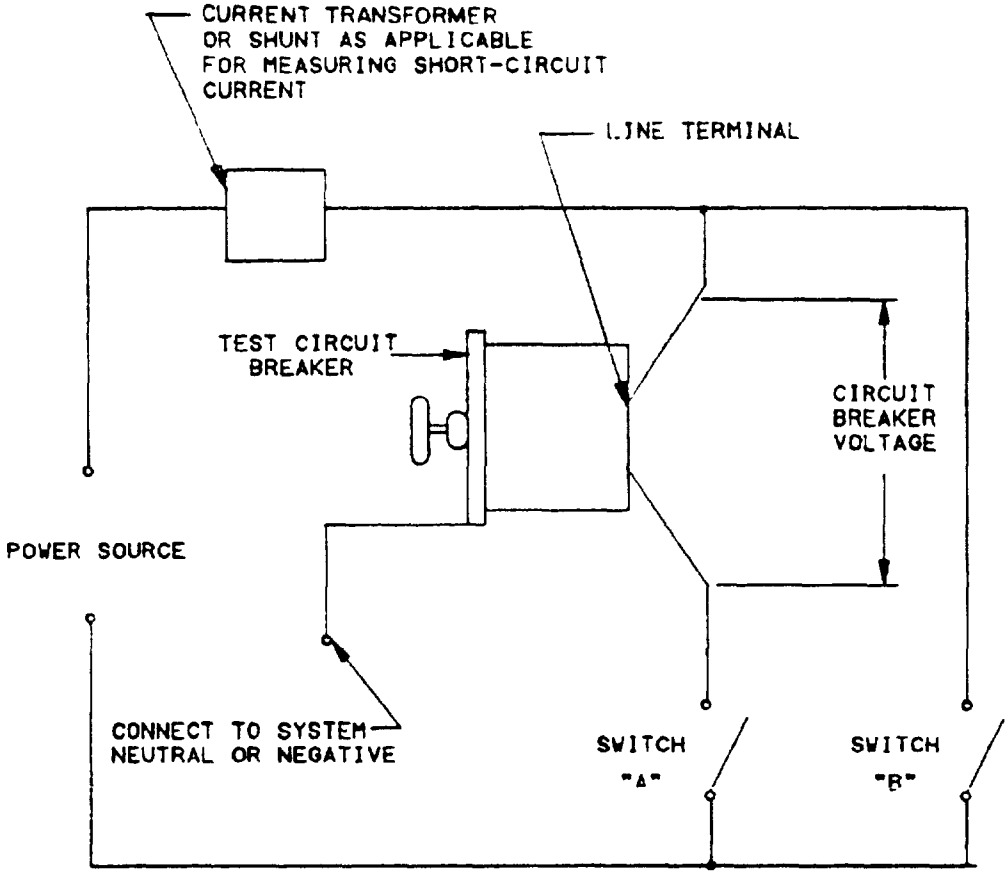

AC or DC short-circuit interrupt test (Symbol "CO")

Open test circuit breaker and switch "A".
Close switch "B" and determine if current capacity of circuit is in accordance with applicable requirement of test breaker.
Open switch "B".
Close test circuit breaker.
Close switch "A"

AC or DC close-in interrupt test (Symbol "OCO")

Open test circuit breaker and switch "A".
Close switch "B" and determine if current capacity of circuit is in accordance with applicable requirement of test breaker.
Open switch "B".
Close switch "A"
Close test circuit breaker.

Short circuit current shall be measured by a current transformer or shunt as indicated and suitable recording oscillograph. The voltage across the breaker shall be recorded simultaneously with short circuit current and at the point indicated.

FIGURE 4 Interrupting capacity test circuit.

Source: https://assist.dla.mil -- Downloaded: 2016-11-16T18:43Z
Check the source to verify that this is the current version before use.

5.2.4 Unitized loads. Unitized loads, commensurate with the level of packing specified in the contract or order, shall be used whenever total quantities for shipment to one destination equal 40 cubic feet (1.1328 cubic meters) or more. Quantities less than 40 cubic feet need not be unitized. Unitized loads shall be uniform in size and quantities to the greatest extent practicable.

5.2.4.1 Level A. Circuit breakers, packed as specified in 5.2.1, shall be unitized on pallets in conformance with MIL-STD-147, load type I, with a wood cap (storage aid 5) positioned over each load.

5.2.4.2 Level B Circuit breakers, packed as specified in 5.2.2, shall be unitized as specified in 5.2.4.1 except that weather resistant fiberboard caps (storage aid 4) shall be used in lieu of wood caps.

5.2.4.3 Level C. Circuit breakers, packed as specified in 5.2.3, shall be unitized as specified in 5.2.4.2 except that the fiberboard caps shall be class domestic.

5.3 Marking. In addition to any special or other identification marking required by the contract (see 6.2), each unit, supplementary, intermediate and exterior container, and unitized load shall be marked in accordance with MIL-STD-129. The complete military or contractor's type or part number, as applicable (including the CAGE), shall be marked on each unit, supplementary and intermediate pack in accordance with the identification marking provisions of MIL-STD-129.

5.4 General.

5.4.1 Exterior containers. Exterior containers (see 5.2.1, 5.2.2, and 5.2.3) shall be of minimum tare and cube consistent with the protection required and shall contain equal quantities of identical stock numbered items to the greatest extent practicable.

5.4.2 Packaging inspection. The inspection of these packaging requirements shall be in accordance with 4.6.3.

5.4.3 Army acquisitions.

5.4.3.1 Level A and B intermediate packs. Intermediate containers shall not exceed 50 unit packs or exceed a maximum of 40 pounds (13.14 kilograms) new weight or 1.5 cubic feet (0.0425 cubic meter) with at least two dimensions not exceeding 16 inches (41 centimeters). Intermediate containers shall not be required when the total quantity to be shipped will result in only one intermediate pack per shipping container.

5.4.3.2 Level A and B packing. When the gross weight exceeds 200 pounds (90.72 kilograms) or the container length and width is 48 X 24 inches (121.92 x 60.96 centimeters) or more and the weight exceeds 100 pounds (45.36 kilograms), 3 X 4-inch (7.62 X 10.16-centimeter) skids (laid flat) shall be applied in accordance with the requirements of the container specification. Unitization shall be required when the containers specified in 5.2.1 and 5.2.2 do not require skids; quantities per destination exceed either a total of 250 pounds or 113.4 kilograms (excluding the pallet) or a volume or 20 cubic feet (0.5664 cubic meter); and the container size permits use of one of the pallet patterns of MIL-STD-147. A quantity of containers, packed as specified except that container strapping may be omitted, shall be placed on a pallet, load type I conforming to MIL-STD-147. For level B, unit containers which meet these requirements may be palletized without further packing. The pallet shall conform to NN-P-71, type IV, group I or II woods. The load shall be "bonded" to the pallet by strapping conforming to QQ-S-781, type I, finish A, or shrink film conforming to L-P-378, type IV. Stretch wrap in accordance with MIL-STD-147 is authorized for shipments within the continental United States and for containerized shipments.

6. NOTES

6.1 Intended use.

6.1.1 Circuit breakers. Circuit breakers covered by this specification are intended primarily for use in the protection of electronic circuits, and should be used where staring inrushes of transient overloads are neither heavy nor prolonged and the equipment must have relatively fast protection. These circuit breakers should not be used in circuits (e.g., primary power circuits of electric systems) whose short circuit current potential is greater than the interrupting capacity of the breaker unless the circuit is properly protected by other means.

6.1.2 Packaging requirements. The preservation, packing, and marking herein are intended for direct shipments to the Government However, at the option of the contractor, or when so specified, the packaging provisions herein are also applicable for the preparation of circuit breakers for shipment from the parts contractor to the original equipment manufacturer.

Source: https://assist.dla.mil -- Downloaded: 2016-11-16T18:43Z
Check the source to verify that this is the current version before use.

6.2 Ordering data.

6.2.1 Acquisition requirements. Acquisition documents should specify the following.

a. Title, number, and date of this specification.

b. Title, number, and date of the applicable specification sheet, and the complete part number (see 3.1).

c. Levels of preservation and packing required (see 5.1 and 5.2).

d. If special or additional identification marking is required (see 5.3).

6.3 Qualification. With respect to products requiring qualification, awards will be made only for products which are at the time set for opening of bids, qualified for inclusion in the applicable qualified products list whether or not such products have actually been so listed by that date. The attention of the contractor is called to this requirement, and manufacturers are urged to arrange to have the products that they propose to offer to the Federal Government tested for qualification in order that they may be eligible to be awarded contracts or purchase orders for the products covered by this specification. The activity responsible for the qualified products list is the U.S. Army Electronics Command, Fort Monmouth, N.J.; however, information pertaining to qualification of products may be obtained from the Defense Electronics Supply Center, Dayton, Ohio 45444 (Attention DESC-EQ).

6 3.1 Copies of "Provisions Governing Qualification" may be obtained upon application to Commanding Officer, Naval Publications and Forms Center, 5801 Tabor Avenue, Philadelphia, Pennsylvania 19120.

6.4 Intermetallic contact. The finishing of metallic areas to be placed in intimate contact by assembly presents a special problem, since intermetallic contact of dissimilar metals results in electrolytic couples that promote corrosion through galvanic action. To provide the required corrosion protection, intermetallic couples are restricted to those permitted by table VI. Table VI shows metals and alloys (or plates) by groups that have common electromotive forces (EMF) within 0.05 volt when coupled with a saturated calomel electrode in sea-water at room ambient temperatures. All members of a group are considered as completely compatible, one with the other. Compatible couples between groups have been specified in table VI based on a potential difference of 0.25 volt maximum. to simplify any arithmetic involved, table VI shows, in addition to EMF against a calomel electrode, a derived "anodic index" with group 1 (gold, etc) as "0" and group 18 (magnesium, etc.) as 175. Subtraction of a lower group anodic index gives the EMF differences in hundredths of a volt.

6.4.1 Groups. Table VII sets up 18 primary groups. It may be noted that neither the metallurgical similarity or dissimilarity of metals is the parameter for selection of compatible couples. All members within a group, regardless of metallurgical similarity, are considered inherently nonsusceptible to galvanic action when coupled with any member within the group; for example, such dissimilar metals as platium and gold. Similarly, such basically dissimilar alloys as austenitic stainless steel, silver-solder, and low brass (all members of group 5) are inherently nonsusceptible when coupled together.

6.4.2 Compatibility graphs. Permissible couple series are shown in table VII by the graphs at the right. Members of groups connected by lines will form permissible couples. A "0" indicates the most cathodic member of each series, a "0" an anodic member, and the arrow indicates the anodic direction.

6.4.3 Selection of compatible couples. Proper selection of metals in the design of equipment will result in fewer intermetallic contact problems. For example, for sheltered exposure, neither silver nor tin require protection finishes. However, since silver has an anodic index of 15 and tin 65, the EMF generated as a couple is 0.50 volt, which is not allowable by table VII. In this case, other metals or plates will be required. It should be noted that, in intermetallic couples, the member with the higher anodic index is anodic to the member with the lower anodic index and will be susceptible to corrosion in the presence of an electrolytic medium. If the surface area of the cathodic part is significantly greater than that of the anodic part, the corrosive attack on the contact area of the anodic part may be greatly intensified. Material selection for intermetallic contact parts therefore, should establish the smaller part as the cathodic member of the couple, whenever practicable.

6.4.4 Plating. When base metals intended for intermetallic contact form couples not allowed by table VI, they are to be plated with those metals that will reduce the potential difference to that allowed by table VII.

Source: https://assist.dla.mil -- Downloaded: 2016-11-16T18:43Z
Check the source to verify that this is the current version before use.

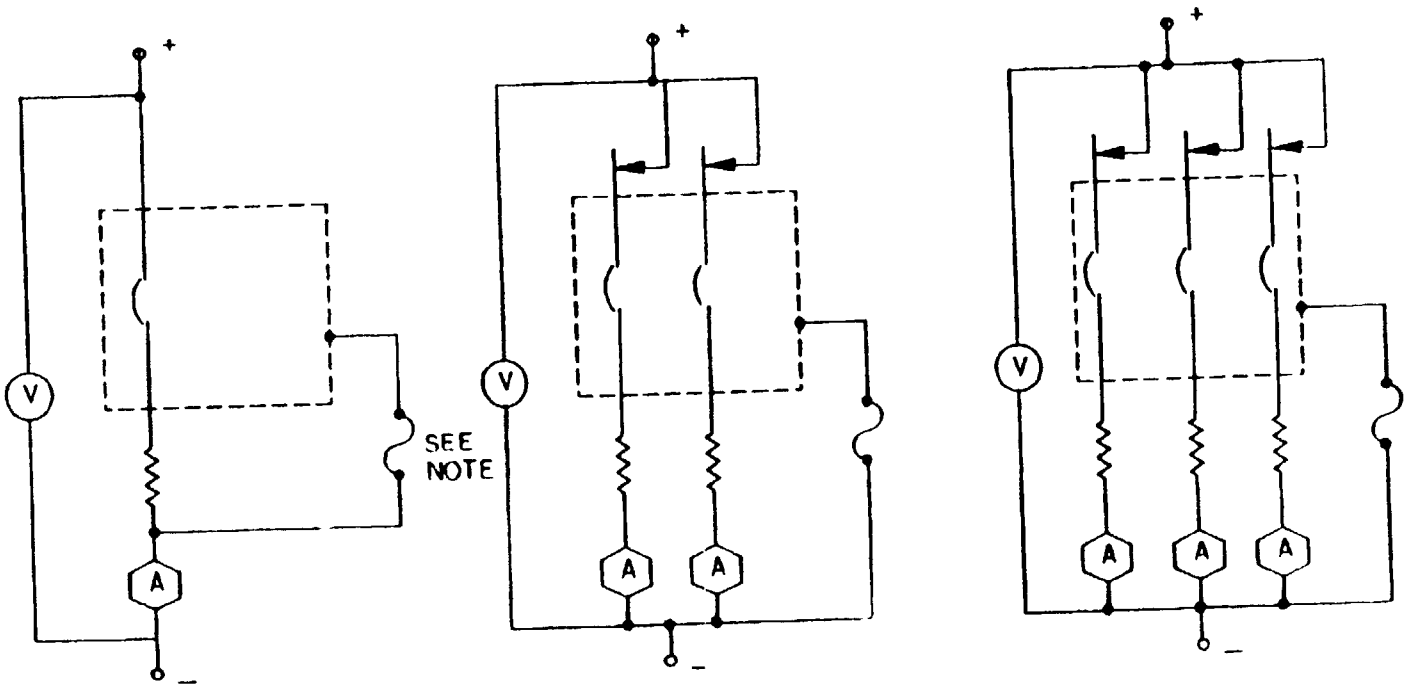

DC circuit wiring diagrams

NOTE Indicating fuse, 3 amperes, nontime delay

FIGURE 5 Interrupting capacity test circuit wiring diagrams

Source: https://assist.dla.mil -- Downloaded: 2016-11-16T18:43Z
Check the source to verify that this is the current version before use.

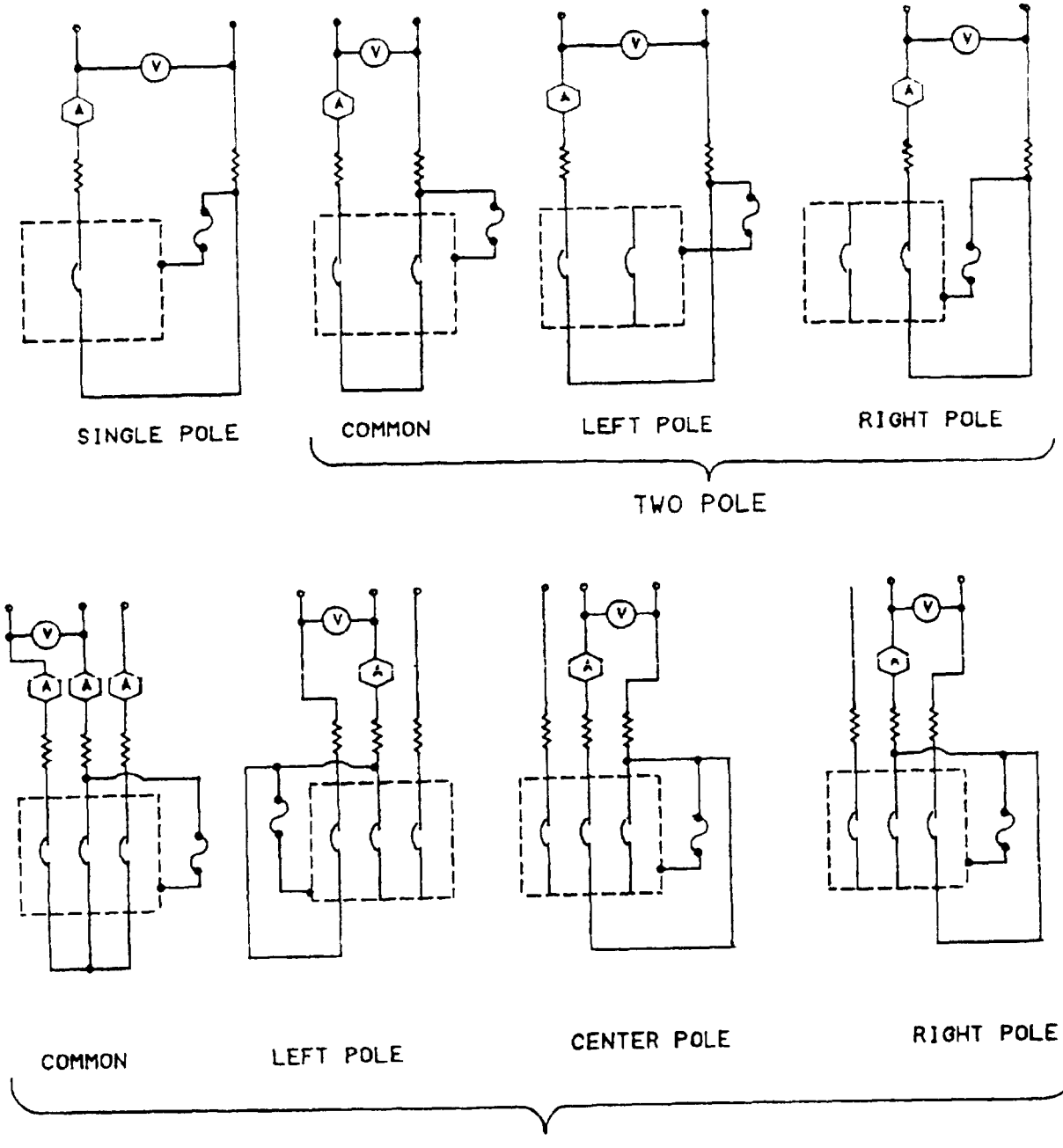

AC circuit wiring diagrams

FIGURE 5 Interrupting capacity test circuit wiring diagrams - Continued

Source: https://assist.dla.mil -- Downloaded: 2016-11-16T18:43Z
Check the source to verify that this is the current version before use.

TABLE VII. Compatible couples (see 6.4). 1/

Group No.	Metallurgical category	EMF (volt)	Anodic index (0.01 V)	Compatible couples
1	Gold, solid and plated; gold-platinum alloys; wrought platinum (most cathodic)	+0.15	0	
2	Rhodium plated on silver-plated copper	+0.05	10	
3	Silver, solid or plated; high silver alloys	0	15	
4	Nickel, solid or plated; monel metal, high nickel-copper alloys	-0.15	30	
5	Copper, solid or plated; low brasses or bronzes; silver solder; German silver; high copper-nickel alloys; nickel-chromium alloys; austenitic corrosion-resistant steels	-0.20	35	
6	Commercial yellow brasses and bronzes	-0.25	40	
7	High brasses and bronzes; naval brass; Muntz metal	-0.30	45	
8	18 percent chromium type corrosion-resistant steels	-0.35	50	
9	Chromium, plated, tin, plated; 12 percent chromium type corrosion-resistant steels	-0.45	60	
10	Tin-plate; terneplate; tin-lead solder	-0.50	65	
11	Lead, solid or plated; high lead alloys	-0.55	70	
12	Aluminum, wrought alloys of the duralumin type	-0.60	75	
13	Iron, wrought, gray, or malleable; plain carbon and low alloy steels, armco iron	-0.70	85	
14	Aluminum, wrought alloys other than duralumin type, aluminum, case alloys of the silicon type	-0.75	90	
15	Aluminum, cast alloys other than silicon type; cadmium, plated and chromated	-0.80	95	
16	Hot-dip-zinc plate; galvanized steel	-1.05	120	
17	Zinc, wrought; zinc-base die-casting alloys, zinc, plated	-1.10	125	
18	Magnesium and magnesium-base alloys, cast or wrought (most anodic)	-1.60	175	

1/ Compatible couples - potential difference of 0.25 volt maximum between groups.

Source: https://assist.dla.mil -- Downloaded: 2016-11-16T18:43Z
Check the source to verify that this is the current version before use.

6.5 Condition for use of level B preservation. When level B preservation is specified (see 5.1.2), this degree of protection should be used for the acquisition of circuit breakers for resupply worldwide under known favorable handling, transportation, and storage conditions.

6.6 Definitions.

6.6.1 Auxiliary contacts (see 1.1 and 3.4.6.2). Auxiliary contacts are those mechanically interlocked with and operated by the main contacts of the circuit breaker, and intended for use in monitoring circuits for signaling, electrical interlocking or other purposes.

6.6.2 Line terminal (see 3.4.8.1). The terminal attached to the isolated stationary main contact of the circuit breaker with the breaker in the open or tripped position is considered the line terminal. If both main contacts of a circuit are isolated, only one terminal is to be designated the line terminal.

6.6.3 Multipole circuit breaker (see 3.4.4). A multipole circuit breaker has two or more poles controlled by a single actuating member.

6.6.4 Overtravel (see 4.7.11). Overtravel is the distance between the normal operating "on" and "off" positions of the actuating lever and the extreme positions to which the lever may be moved in either direction

6.6.5 Time delay (see 3.8). Time delay is the delay factor purposely designed into the tripping time of a circuit breaker.

6.6.6 Tripping time (see 3.8). Tripping time is the total interval of elapsed time from the instant of applying a given overcurrent to the circuit breaker to the completion of the interruption of the circuit.

6.6.7 Product line. Includes the entire production of all circuit breakers in the same basic sealed enclosures as those covered by this specification.

6.7 Warning. Potentially hazardous situations are inherent in some of the test procedures specified in this specification. Precautions should therefore be taken to insure that test personnel are adequately protected and observe the necessary safety measures at all times.

6.8 Background information. Previous issues of this specification contained circuit breakers with five separate voltage/frequency ratings. It is now possible to supply one circuit breaker which will function properly at all five voltage/frequency ratings.

6.9 Subject (key word) listing.

Circuit breakers

Low-power

Sealed

6.10 Changes from previous issue. Asterisks are not used in this revision to identify changes with respect to the previous issue, due to the extensiveness of the changes.

Source: https://assist.dla.mil -- Downloaded: 2016-11-16T18:43Z
Check the source to verify that this is the current version before use.

APPENDIX

PROCEDURE FOR QUALIFICATION INSPECTION

10. SCOPE

10.1 Scope. This appendix details the procedure to submit samples, with related data, for qualification inspection of circuit breakers covered by this specification. The procedure for extending qualification of the required sample to other circuit breakers covered by this specification is also included. This appendix is a mandatory part of the specification. The information contained herein is intended for compliance only.

20. APPLICABLE DOCUMENTS

This section is not applicable to this appendix.

30. SUBMISSION

30.1 Sample Unless otherwise specified, 36 sample circuit breakers for each specification sheet for which qualification is sought, shall be submitted. When qualification is sought for two circuit breakers covered by two specification sheets that are identical, except that one covers circuit breakers with auxiliary contact terminals and the other covers circuit breakers without auxiliary contact terminals, the former shall be submitted. The 36 sample units shall be composed of six groups of six each.

Two of the 6-unit groups shall be of the highest current rating and one 6-unit group shall be of the lowest current rating. The other three 6-unit groups may be composed of the highest or lowest current rating at the option of the manufacturer, however, the sample units within each 6-unit group shall be either all of the highest current rating or all of the lowest current rating. Each 6-unit group shall be divided equally among the three time delays, i.e., A, B, and C. When qualification is sought for the high inrush feature, only circuit breakers of the high inrush design shall be submitted in delays A and B; the standard delay shall be submitted for delay C. No failures will be allowed.

30.2 Test data. When examinations and tests are to be performed at a Government laboratory prior to submission, all sample units shall be subjected to all of the examinations and tests indicated as nondestructive in table IV. Each submission shall be accomplished by the test data obtained from these examinations and tests. The performance of the destructive tests by the manufacturer on a duplicate set of sample units is encouraged, although not required. All test data shall be submitted in duplicate.

30.3 Certificate of material. When submitting samples for qualification, the manufacturer shall submit certification, in duplicate, that the materials used in his components are in accordance with the applicable specification requirements.

30.4 Description of items. The manufacturer shall submit a detailed description of the circuit breakers being submitted for qualification, including materials used for the envelope.

40. EXTENT OF QUALIFICATION

40.1 The current rating range included in the qualification of circuit breakers covered by any one specification sheet will be between the two extreme current ratings (highest and lowest) that pass the required qualification inspection. Qualification of circuit breakers with auxiliary contact terminals will also grant qualification to circuit breakers that are identical without auxiliary contact terminals. Qualification of circuit breakers with the high inrush feature will also grant qualification to circuit breakers that are identical without the high inrush feature.

Source: https://assist.dla.mil -- Downloaded: 2016-11-16T18:43Z
Check the source to verify that this is the current version before use.

Custodians.
Army - ER
Navy - EC
Air Force - 85

Review activities:
Army - MI, SC
Navy - OS
Air Force - 11, 17, 99
DLA - ES

User activities:
Army - AR, AY
Navy - AS, MC, SH
Air Force - 19

Preparing activity
Army - ER

Agent
DLA - ES

(Project 5925-0190)

Source: https://assist.dla.mil -- Downloaded: 2016-11-16T18:43Z
Check the source to verify that this is the current version before use.

INSTRUCTIONS In a continuing effort to make our standardization documents better, the DoD provides this form for use in ...itting comments and suggestions for improvements All users of military standardization documents are invited to provide ...ggestions This form may be detached, folded along the lines indicated, taped along the loose edge *(DO NOT STAPLE)*, and ...ailed In block 5, be as specific as possible about particular problem areas such as wording which required interpretation, was too rigid, restrictive, loose, ambiguous, or was incompatible, and give proposed wording changes which would alleviate the problems Enter in block 6 any remarks not related to a specific paragraph of the document If block 7 is filled out, an acknowledgement will be mailed to you within 30 days to let you know that your comments were received and are being considered

NOTE This form may not be used to request copies of documents, nor to request waivers, deviations, or clarification of specification requirements on current contracts Comments submitted on this form do not constitute or imply authorization to waive any portion of the referenced document*(s)* or to amend contractual requirements

(Fold along this line)

(Fold along this line)

DEPARTMENT OF THE ARMY

NO POSTAGE NECESSARY IF MAILED IN THE UNITED STATES

OFFICIAL BUSINESS
PENALTY FOR PRIVATE USE $300

BUSINESS REPLY MAIL
FIRST CLASS PERMIT NO 12062 WASHINGTON D C

POSTAGE WILL BE PAID BY THE DEPARTMENT OF THE ARMY

Commander
US Army Laboratory Command
Attn. AMSLC-TP-TM
Adelphia Md. 20783-1145

Source: https://assist.dla.mil -- Downloaded: 2016-11-16T18:43Z
Check the source to verify that this is the current version before use.

STANDARDIZATION DOCUMENT IMPROVEMENT PROPOSAL

(See Instructions – Reverse Side)

1. DOCUMENT NUMBER	2. DOCUMENT TITLE

3a. NAME OF SUBMITTING ORGANIZATION	4. TYPE OF ORGANIZATION *(Mark one)*
	☐ VENDOR
b. ADDRESS *(Street, City, State, ZIP Code)*	☐ USER
	☐ MANUFACTURER
	☐ OTHER *(Specify)* _____

5. PROBLEM AREAS

a. Paragraph Number and Wording

b. Recommended Wording

c. Reason/Rationale for Recommendation

6. REMARKS

7a. NAME OF SUBMITTER *(Last, First, MI)* – Optional	b. WORK TELEPHONE NUMBER *(Include Area Code)* – Optional
c. MAILING ADDRESS *(Street, City, State, ZIP Code)* – Optional	8. DATE OF SUBMISSION *(YYMMDD)*

DD FORM 82 MAR 1426

PREVIOUS EDITION IS OBSOLETE

Source: https://assist.dla.mil -- Downloaded: 2016-11-16T18:43Z
Check the source to verify that this is the current version before use.