INCH-POUND

MIL-STD-814C
23 February 1993
SUPERSEDING
MIL-STD-814B
10 June 1983

MILITARY STANDARD

REQUIREMENTS FOR TIEDOWN, SUSPENSION AND EXTRACTION PROVISIONS ON MILITARY MATERIEL FOR AIRDROP

AMSC N/A

FSC 1670

DISTRIBUTION STATEMENT A. Approved for public release; distribution is unlimited.

Source: https://assist.dla.mil -- Downloaded: 2016-12-11T00:45Z
Check the source to verify that this is the current version before use.

FORWARD

1. This military standard is approved for use by all Departments and Agencies of the Department of Defense.

2. This revised standard provides the new tiedown, suspension, and extraction requirements for both the Low Velocity Airdrop (LVAD) and the Low Altitude Parachute Extraction System (LAPES) methods of airdrop. The implementation of new airdrop systems and components have dictated the need to change the aforementioned requirements.

3. Provisions must also meet MIL-STD-209 so that the Equipment can be transported by surface modes and internal air transports. Strength requirements of provisions specified in this issue of MIL-STD-814 exceed those specified in MIL-STD-209 for comparable size provisions.

4. MIL-STD-669 establishes a method of determining and evaluating the capability of the airdrop item to withstand the forces resulting from ground impact for both the low velocity and the low altitude parachute extraction loads.

5. Beneficial comments (recommendations, additions, deletions) and any pertinent data which may be used in improving this document should be addressed to: U.S. Army Natick Research, Development, and Engineering Center, ATTN: SATNC-UXT, Natick, MA 01760-5017, by using the Standardization Document Improvement Proposal (DD Form 1426) appearing at the end of this document or by letter.

Source: https://assist.dla.mil -- Downloaded: 2016-12-11T00:45Z
Check the source to verify that this is the current version before use.

CONTENTS

PARAGRAPH		PAGE
1.	SCOPE	1
1.1	Scope	1
1.2	Application	1
2.	APPLICABLE DOCUMENTS	1
2.1	Government documents	1
2.1.1	Specifications, standards, and handbooks	1
2.2	Order of precedence	1
3.	DEFINITIONS	2
3.1	Airdrop	2
3.2	Airdrop weight	2
3.3	Container load	2
3.4	Design limit load	2
3.5	Extraction provision	2
3.6	Extraction system	2
3.7	Gross rigged weight	2
3.8	Item extraction	2
3.9	Low altitude parachute extraction system (LAPES)	2
3.10	Low velocity platform airdrop	2
3.11	Materiel developer	3
3.12	Platform extraction	3
3.13	Platform load	3
3.14	Recovery parachute system	3
3.15	Suspended weight	3
3.16	Suspension provision	3
3.17	Tiedown provision	3
3.18	Ultimate strength	3
3.19	Working load	3
3.20	Yield load	3
4.	GENERAL REQUIREMENTS	3
4.1	Location	3
4.2	Multipurpose functions	4
4.3	Methods of airdrop	4
5.	DETAILED REQUIREMENTS	4
5.1	Tiedown provisions	4
5.1.1	Dimensional requirements	4
5.1.2	Working load, design limit load and minimum number.	4
5.1.3	Ultimate strength	6
5.1.4	Location	6
5.1.5	Marking	6
5.2	Suspension provisions	6
5.2.1	Dimensional requirements	6
5.2.2	Working load and design limit load	7

Source: https://assist.dla.mil -- Downloaded: 2016-12-11T00:45Z
Check the source to verify that this is the current version before use.

CONTENTS (cont'd)

PARAGRAPH		PAGE
5.2.3	Ultimate strength	7
5.2.4	Number and location	7
5.3	Extraction provisions	8
5.3.1	Use of existing components	8
5.3.2	Low velocity airdrop	8
5.3.2.1	Dimensional requirements	8
5.3.2.2	Working load and design limit load	8
5.3.2.3	Ultimate strength	9
5.3.2.4	Location	9
5.3.3	Low altitude parachute extraction system (LAPES) airdrop	9
5.3.3.1	Dimensional requirements	9
5.3.3.2	Working load and design limit load	9
5.3.3.3	Ultimate strength	10
5.3.3.4	Number and location	10
5.4	Internal restraint criteria	10
5.5	Special design military materiel provision requirements	11
5.6	Testing of provisions	11
5.6.1	Tiedown provisions	11
5.6.2	Suspension provisions	11
5.6.3	Low velocity extraction provision	12
5.6.4	LAPES extraction provisions	12
6.	NOTES	12
6.1	Issue of DODISS	12
6.2	Integral documents	12
6.3	Associated documents	12
6.4	Container loads	12
6.5	Review and approval of new and developmental items for airdrop testing	12
6.6	Maximum width and height of airdrop items	13
6.7	International Standardization Agreement	14
6.8	Subject term (key word) listing	14
6.9	Changes from previous issue	14

FIGURES

FIGURES		PAGE
1.	Tiedown provision design and dimensional requirements	15
2.	Typical rigged load showing tiedowns	16
3.	Tiedown provision limits of direction of loading	17

Source: https://assist.dla.mil -- Downloaded: 2016-12-11T00:45Z
Check the source to verify that this is the current version before use.

CONTENTS (cont'd)

FIGURES (cont'd)

FIGURES		PAGE
4.	Dimensions Requirements	
	a. Suspension provision	18
	b. Two point LAPES extraction provision for items with and airdrop weight of greater than 19,810 pounds	18
5.	Suspension provisions, direction of loading and locations	19
6A.	Low velocity airdrop extraction provision dimensional requirements for items with an airdrop weight between 14,500 pounds and 34,236 pounds	20
6B.	Low velocity extractional provision dimensional requirements for existing towbars and pintles	21
7.	LAPES requirements for two point extraction with an airdrop weight of 19,810 pounds or less; or four point extraction	22
8.	Location of LAPES extraction provisions	23
9.	Tipoff curve	24

TABLES

TABLES		PAGE
I.	Number of tiedown provisions required per each longitudinal side	5
II.	Low velocity airdrop extraction provision working load	8
III.	LAPES extraction provisions working load	9
IV.	Airdrop restraint criteria (G)	11
V.	Recovery parachutes	13

Source: https://assist.dla.mil -- Downloaded: 2016-12-11T00:45Z
Check the source to verify that this is the current version before use.

1. SCOPE

1.1 Scope. This standard establishes the design, number, and location requirements of airdrop tiedown, suspension, and extraction provisions on airdrop items delivered by LVAD and LAPES airdrop.

1.2 Application. These requirements are applicable to provisions for:

a. Tiedown of the item to an airdrop platform.

b. Suspension of the item from the recovery parachute system during descent.

c. Extraction of the item from an aircraft in flight.

d. Internal restraint and testing of the provisions.

The requirements specified herein shall be used in the design of new and developmental items of military material.

2. APPLICABLE DOCUMENTS

2.1 Government documents.

2.1.1 Specifications, standards, and handbooks. The following specifications, standards, and handbooks form a part of this document to the extent specified herein. Unless otherwise specified, the issues of these documents are those listed in the issue of the Department of Defense Index of Specifications and Standards (DODISS) and supplement thereto, cited in the solicitation (see 6.1).

STANDARD

MILITARY

MS 51118 - Pintle Assembly, Towing: 40,000 Lbs Capacity, Manual Release

(Unless otherwise indicated, copies of federal and military specifications, standards, and handbooks are available from the Standardization Documents Order Desk, Building 4D, 700 Robbins Avenue, Philadelphia, PA 19111-5094.)

2.2 Order of precedence. In the event of conflict between the text of this document and the references cited herein, the text of this document takes precedence. Nothing in this document, however, supersedes applicable laws and regulations unless a specific exemption has been obtained.

Source: https://assist.dla.mil -- Downloaded: 2016-12-11T00:45Z
Check the source to verify that this is the current version before use.

3. DEFINITIONS

3.1 Airdrop. A movement by aircraft, wherein personnel, supplies and equipment are unloaded in flight.

3.2 Airdrop weight. The weight of the item, including external or internal loads such as fuel, ammunition, field gear, or rations.

3.3 Container load. Airdrop items are packed in an A-7A cargo sling, A-21, A-22, and A-23 fabric cargo bag with the energy dissipater and may have a plywood skid on the bottom of the container. The completely rigged container load less the parachute must not weigh more than 2200 pounds.

3.4 Design limit load. The applied force, or maximum probable force, times a safety factor that a suspension, extraction, or tiedown provision, including its connecting structural members, can withstand when subjected to its most severe airdrop environment. This load must be less than the yield load.

3.5 Extraction provision. An integral fitting on the item, for attaching the extraction system.

3.6 Extraction system. A system used to withdraw airdrop items from aircraft in flight.

3.7 Gross rigged weight. The airdrop weight plus the weight of all airdrop rigging.

a. For LVAD the gross rigged weight = approximately 1600 pounds + 1.18 X airdrop weight.

b. For LAPES the gross rigged weight = approximately 2500 pounds + 1.05 X airdrop weight.

3.8 Item extraction. The extraction system is attached to the airdrop item. The item must be equipped with extraction provisions.

3.9 Low altitude parachute extraction system (LAPES). LAPES is a type of airdrop used for platform loads where the load is extracted from a C-130 aircraft, flying at approximately 130 knots, and at a ramp height of up to 15 feet above ground level. Recovery parachute systems are not used.

3.10 Low velocity platform airdrop (LVAD). LVAD is a type of airdrop used for platform loads where the load is extracted from a C-130 aircraft at 140 knots, from C-141 and C-5 aircraft at 150 knots by extraction parachutes at an altitude of 700 feet or more. Recovery parachutes are attached to the load to slow the descent and to allow an impact velocity of less than 28.5 ft/sec.

Source: https://assist.dla.mil -- Downloaded: 2016-12-11T00:45Z
Check the source to verify that this is the current version before use.

3.11 Materiel developer. Agency responsible for developing and fielding military equipment and materiel.

3.12 Platform extraction. The extraction system is attached to the platform. No extraction provisions are required on the airdrop item. Airdrop items weighing 14,500 pounds or less do not require extraction provisions for low velocity airdrop and airdrop items weighing 19,810 pounds or less may be platform extracted for LAPES airdrop.

3.13 Platform load. Airdrop platform loads consist of supplies or equipment which have an airdrop weight of more than approximately 1800 pounds which are placed on top of energy absorbing material and secured to a standard airdrop platform by fabric tiedown assemblies so that no damage will occur to the rigged load or aircraft during flight, extraction sequence, and ground impact.

3.14 Recovery parachute system. A system used to retard and stabilize the descent of an airdropped item.

3.15 Suspended weight. The gross rigged weight less the weight of the parachute system. Suspended weight = approximately 1700 pounds + 1.09 X airdrop weight.

3.16 Suspension provision. An integral fitting on the item for attaching the recovery parachute system.

3.17 Tiedown provision. An integral fitting or part of an item for restraining the item to an airdrop platform using tiedown assemblies.

3.18 Ultimate strength. The maximum force which a provision must withstand before breaking failure occurs.

3.19 Working load. The anticipated maximum resultant load imposed on a provision under actual service conditions.

3.20 Yield load. The force at which a provision including its connecting structural members exhibits a permanent deformation or set.

4. GENERAL REQUIREMENTS

4.1 Location. Tiedown, suspension, and extraction provisions shall be designed and located to permit immediate identification and proper effective use. Wherever possible, tiedown, suspension, and extraction provisions shall be located so as not to project beyond the envelope of the item of military material. All provisions shall be located so that slings and tiedowns do not come in contact with the equipment. If this is not possible, the structure must have enough strength to withstand the resulting forces and edges in contact with slings, and tiedowns must be rounded to 1/4-inch radius minimum.

Source: https://assist.dla.mil -- Downloaded: 2016-12-11T00:45Z
Check the source to verify that this is the current version before use.

4.2 Multipurpose functions. Provisions shall be designed to perform as many functions as possible so as to reduce the weight and cost of the item. Airdrop provisions may be designed so they can be used for other kinds of transport. Tiedowns may be located so they may be used for lateral as well as longitudinal restraint. Rear suspension provisions and the low velocity extraction provision may be located to satisfy the LAPES extraction criteria.

4.3 Methods of airdrop. Airdrop items must be capable of being delivered by both LVAD and LAPES methods of airdrop unless otherwise indicated by the material developer.

5. DETAILED REQUIREMENTS

5.1 Tiedown provisions.

5.1.1 Dimensional requirements. Tiedown provisions shall be designed to the criteria given in figure 1. The 10,000 and 20,000 pound provisions shall have a minimum of 2 inch inside radius of the curved arc opening. A weldless ring such as the Crosby Laughlin-S 643 or equal, 7/8-inch minimum by 4 inch minimum ID may be used as a tiedown provision if it is attached so that it can rotate freely from the horizontal plane to 90 degrees below and meet the strength requirements. Provisions must be free from burrs.

5.1.2 Working load, design limit load, and minimum number. The working load of each tiedown provision and the minimum number of tiedown provisions required per longitudinal side of the airdrop items are listed in table I. The design limit load must not be less than 1.25 times the working load. LAPES computations are based on using a 10,000 pound minimum breaking strength of the tiedown strap assuming a tiedown effectiveness due to a strap angle of 30 degrees from the longitudinal centerline of the load and 34.4 degrees from the horizontal plane; and using the required longitudinal restraint criteria of 12 G forward restraint for platform extraction and 8 G forward restraint for item extraction. Low velocity airdrop values are based upon 3 G forward with a 10,000 pound minimum breaking strength of the tiedown strap, assuming a tiedown effectiveness due to a strap angle of 30 degrees times 34.4 degrees. Airdrop items whose width between left and right tiedowns exceeds 60 inches must be provided with a minimum of one additional tiedown provision at each end of the airdrop item which is capable of restraining in both lateral directions, and have a working load equal to the side tiedown provision. Total provisions equal 2 times the number of LAPES longitudinal provisions per side plus additional end provisions as required. Towing pintles, lunettes, shackles, etc., may be used as lateral tiedown provisions if they meet the strength and location requirements. Also, side tiedown provisions located at the corners opposite the extraction end may be used as lateral tiedown provisions.

Source: https://assist.dla.mil -- Downloaded: 2016-12-11T00:45Z
Check the source to verify that this is the current version before use.

TABLE I. Number of tiedown provisions required per each longitudinal side

Type of delivery	Airdrop weight of item * range (lbs.)	Number per side	Working load each (lbs.)	or	Number per side	Working load each (lbs.)
LVAD	up to 4766	2	5,000		-	-
	4767 - 7150	3	"		2	10,000
	7151 - 9533	2	10,000		-	-
	9534 - 14,300	3	"		-	-
	14,301 - 19,066	4	"		2	20,000
	19,067 - 23,833	5	"		3	"
	23,834 - 28,603	3	20,000		-	-
	28,604 - 38,136	4	"		-	-
	38,137 - 47,670	5	"		-	-
	47,671 - 52,270	6	"		-	-
LAPES (ITEM EXTRACTION	up to 14,280	4	20,000		8	10,000
	14,281 - 16,065	5	"		9	"
	16,066 - 17,850	5	"		10	"
	17,851 - 21,420	6	"		-	-
	21,421 - 24,990	7	"		-	-
	24,991 - 28,560	8	"		-	-
	28,561 - 32,130	9	"		-	-
	32,131 - 35,700	10	"		-	-
	35,701 - 39,270	11	"		-	-
	39,271 - 42,840	12	"		-	-
	42,841 - 46,410	13	"		-	-
	46,411 - 50,000	14	"		-	-
	50,001 - 53,570	15	"		-	-
	53,571 - 54,760	16	"		-	-
LAPES	up to 2380	4	5,000		2	10,000
	2381 - 2975	5	"		3	"
	2976 - 3570	6	"		3	"
(PLATFORM	3571 - 4165	7	"		4	"
EXTRACTION)	4166 - 4760	8	"		4	"
	4761 - 5355	9	"		5	"
	5356 - 5950	10	"		5	"
	5951 - 6545	11	"		6	"
	6546 - 7140	12	"		6	"
	7141 - 8330	7	10,000		-	-
	8331 - 9520	8	"		-	-
	9521 - 10,710	5	20,000		-	10,000
	10,711 - 11,900	5	"		10	"
	11,901 - 13,090	6	"		11	"
	13,091 - 14,280	6	"		12	"

Source: https://assist.dla.mil -- Downloaded: 2016-12-11T00:45Z
Check the source to verify that this is the current version before use.

TABLE I. Number of tiedown provisions required per each longitudinal side (cont'd)

Type of delivery	Airdrop weight of item * range (lbs.)	Number per side	Working load each (lbs.)	or	Number per side	Working load each (lbs.)
LAPES	14,281 - 15,470	7	"		13	"
(PLATFORM	15,471 - 16,660	7	"		14	"
EXTRACTION)	16,661 - 19,040	8	"		-	-
(cont'd)	19,041 - 19,810	9	"		-	-

* Current aircraft capabilities limit the rigged weight to 42,000 pounds for LVAD and LAPES from the C-130, 38,500 pounds for LVAD from the C-141 aircraft, and 42,000 pounds for LVAD from the C-5 aircraft. The C-141 may airdrop up to 42,000 pounds during contingency situations following Air Force approval.

5.1.3 Ultimate strength. The ultimate strength of each tiedown provision and supporting structure shall be at least 1.5 times the working load.

5.1.4 Location. Tiedown provisions shall be mounted along each side of the airdrop item in a horizontal position to 90 degrees below (preferred design), and shall be spaced as equally as possible and placed symmetrically in relation to the longitudinal axis of the item. The height of the tiedown provisions shall be, if possible, between 12 inches and 48 inches from the bottom of the airdrop item. Side tiedowns may be positioned at the corners so that they may be used for lateral restraint (see figure 2). Each provision must be located so that a tiedown strap may be attached at any angle between 15 degrees and 45 degrees down from the horizontal and between 0 degrees and 45 degrees from the longitudinal axis in both directions without interference with sharp edges of the airdrop item (see figure 3). Smooth parts of the airdrop item in contact with the tiedown strap must be capable of withstanding the force applied by the strap without permanent deformation. See figure 2 for a typical rigged load showing tiedowns.

5.1.5 Marking. Each tiedown provision shall be marked so as to identify the following:

The working load rating of the provision as a 5,000 pound, 10,000 pound, or 20,000 pound tiedown.

5.2 Suspension provisions.

5.2.1 Dimensional requirements. The suspension provisions provided for airdrop items shall have a minimum hole diameter of 3 inches.

Dimensional details for suspension provisions are as shown in figure 4.

Source: https://assist.dla.mil -- Downloaded: 2016-12-11T00:45Z
Check the source to verify that this is the current version before use.

5.2.2 Working load and design limit load. Each forward or aft pair of suspension provisions shall withstand without permanent deformation the design limit load when applied within the angular ranges indicated in figure 5. The working load for each pair of forward and aft suspension provisions is determined by multiplying the appropriate deceleration load factor (G) times the total suspended weight of the airdrop load. The design limit load shall not be less than 1.35 times the working load.

APPROXIMATE AIRDROP WEIGHT (LBS.)	G	"G" X TOTAL SUSPENDED WEIGHT = WORKING LOAD
Up to 5000	3.50	
5001 - 21,200	3.00	
21,201 and above	2.50	

5.2.3 Ultimate strength. The ultimate strength of each suspension provision shall be a minimum of 1.5 times the working load.

5.2.4 Number and location. Four suspension provisions shall be provided for each airdrop item. Suspension provisions shall be attached in pairs so that each pair provisions shall be spaced approximately equally distant from the lateral axis through the Center of Gravity (CG) of the airdrop item and above the horizontal plane passing through the CG of the airdrop item at a height such that the interference between suspension slings and the item is minimized. Each suspension provision of a forward or an aft pair shall be located on the same horizontal plane, equally distant from the longitudinal axis and on the same lateral axis (see figure 5).

The spacing of the suspension provisions shall be within the following limits:

(a) lateral spacing of at least one pair: minimum 4 feet.
(b) longitudinal: minimum 1/2 the length of the airdrop item; maximum 3 X (lateral spacing) or 20 feet, whichever is shorter.

Airdrop items smaller than the minimum spacing shall have the suspension provisions located at the outer edge of the item. It is desired that the provisions be located as far apart as possible within the above limits.

The plane of the suspension eye shall be in the longitudinal vertical plane of the load or in approximate alignment with the anticipated angle of the sling leg.

The use of a spreader bar is not authorized. Parts of the airdrop item in contact with the suspension slings shall be strong enough to withstand the resulting forces and shall not have any sharp edges.

Source: https://assist.dla.mil -- Downloaded: 2016-12-11T00:45Z
Check the source to verify that this is the current version before use.

NOTE: Some special items may be airdropped without suspension provisions by using platform suspension. For information contact: U.S. Army Natick Research, Development, and Engineering Center, ATTN: SATNC-UAS, Kansas Street, Natick, MA 01760-5017.

5.3 Extraction provisions.

5.3.1 Use of existing components. Standard vehicle pintles, suspension provisions, tow bar attachments, etc., may be used as extraction provisions if they meet the detailed requirements. Non-welded attachment of the extraction provision to the item is preferred.

5.3.2 Low velocity airdrop (LVAD). A single airdrop extraction provision is required for airdrop items having an airdrop weight of more than 14,500 pounds.

MS 51118 can be used for extracting all loads with an airdrop weight of up to 34,236 pounds, provided attachments meet strength criteria.

5.3.2.1 Dimensional requirements. See figures 6a and 6b.

5.3.2.2 Working load and design limit load. The extraction provisions shall have the following working load:

TABLE II. LVAD provisions working load

Approximate airdrop weight * (lbs.)	Working load (lbs.)
14,500 - 22,372	27,050
22,373 - 34,236	50,000
34,237 - 52,270	80,446**

* Current aircraft capabilities limit the LVAD gross rigged weight to 42,000 pounds for the C-130, 38,500 pounds for the C-141 aircraft, and 42,000 pounds for the C-5 aircraft. LVAD loads weighing up to 42,000 pounds may be airdropped from the C-141 during contingency situations following Air Force approval.

** Based upon three 38 foot heavy duty extraction parachutes at 150 Knots Indicated Airspeed (KIAS).

The design limit load shall not be less than 1.5 times the working load.

Source: https://assist.dla.mil -- Downloaded: 2016-12-11T00:45Z
Check the source to verify that this is the current version before use.

5.3.2.3 Ultimate strength. The ultimate strength of non-welded components shall be at least 1.65 times the working load. If welded components are used the ultimate strength of the weld shall be at least 4.0 times the working load.

5.3.2.4 Location. The low velocity airdrop extraction provision shall be located in the vertical plane of the longitudinal centerline and on or below the level of the CG of the item.

5.3.3 Low altitude parachute extraction system (LAPES) airdrop. Extraction provisions are required on items with an airdrop weight of more than 19,810 pounds. Extraction provisions are optional on items with airdrop weights between 12,200 pounds and 19,810 pounds. Those items in this weight range which have no LAPES extraction provisions will be platform extracted and require a greater number of tiedown provisions. There is no requirement for LAPES extraction provision for items with airdrop weight below 12,200 pounds.

5.3.3.1 Dimensional requirements. See figure 7 for all items using four point extraction and for items using two point extraction with an airdrop weight less than 19,810 pounds. See figure 4 for a two point extraction of items with an airdrop weight greater than 19,810 pounds.

5.3.3.2 Working load and design limit load. The LAPES extraction provisions have the working loads listed in table III. The design limit load shall not be less than 1.5 times the working load. A two point extraction uses two 9 foot slings which are attached at each end of a provision as shown in figure 8. A horizontal force (F) is applied at the intersection of the two slings. A four point extraction uses two 20 foot slings. One sling is attached on the right side, one end to the top provision, and the other end to the bottom provision. The other sling is attached to the left side, top and bottom provisions. The force (F) is applied to the two 20 foot slings by a sliding connection halfway between the upper and lower provisions. The extraction provisions shall have the following working load spread equally over the total number of provisions provided:

TABLE III. LAPES extraction provisions working load

Approximate airdrop weight * (lbs.)	Working load (lbs.)
12,200 - 19,810	42,500
19,811 - 27,620	60,500
27,621 - 37,620	84,000

Source: https://assist.dla.mil -- Downloaded: 2016-12-11T00:45Z
Check the source to verify that this is the current version before use.

TABLE III. LAPES extraction provisions working load (cont'd)

Approximate airdrop weight * (lbs.)	Working load (lbs.)
37,621 - 54,760	112,500

* Current aircraft capabilities limit the rigged weight to 42,000 pounds for C-130 LAPES.

5.3.3.3 Ultimate strength. The ultimate strength of non-welded components shall be at least 1.65 times the working load. If welded components are used the ultimate strength of the weld shall be at least 4.0 times the working load.

5.3.3.4 Number and location. The designer may select an arrangement of either two or four LAPES extraction provisions.

If a two-provision arrangement is selected, the provisions shall be placed (as shown in figure 8) equidistant from the longitudinal centerline of the load, on a common horizontal centerline which shall lie anywhere between two horizontal planes - one through the rigged load CG and the other 12 inches above.

If a four-provision arrangement is selected, the provisions shall be placed (as shown in figure 8) so as to form an upper pair and lower pair, each on a common horizontal centerline. The member of each pair shall be placed symmetrically about the vertical centerline of the load. The vertical placement of the pairs shall be such that the minimum distance apart is 18 inches and the halfway distance between the pairs shall fall anywhere between two horizontal planes - one through the rigged load CG and the other 14 inches above.

The low velocity extraction provisions can be used to attach the two lower points of the four point LAPES if its location satisfies both criteria and the attachment hole has a 3 inch minimum diameter and its width is 1.875 inches. The two rear suspension provisions can be used for the two upper LAPES points if they can be located to satisfy both suspension and LAPES criteria.

5.4 Internal restraint criteria. Internal cargo and components of an airdrop item shall be restrained for the environment specified in table IV.

Source: https://assist.dla.mil -- Downloaded: 2016-12-11T00:45Z
Check the source to verify that this is the current version before use.

TABLE IV. Airdrop restraint criteria (G)

Direction	LAPES		Low velocity
	End item extraction	Platform extraction	
Forward	8	12	3
Aft	3	3	1-1/2
Lateral	3	3	1-1/2
Upward	4	4	2

5.5 Special design military material provision requirements. This standard does not include airdrop provision requirements for many special purpose items of military material being developed. The unique shape or other characteristics of the item may require special consideration. Assistance with the interpretation of this standard, airdrop design, assistance and deviations from this standard shall be referred to the U.S. Army Natick Research, Development, and Engineering Center, Natick, MA 01760-5017.

5.6 Testing of provisions. Testing of provisions shall not result in visual permanent deformation or set in the provision or other equipment structural components.

5.6.1 Tiedown provisions. Each tiedown provision on one side of the airdrop item shall have test load (F) applied equal to or greater than the design limit of the tiedown for not less than 6.0 seconds. This load will be applied twice; one time at 45 degrees from the ground and in the longitudinal direction of the airdrop item; another at 45 degrees from the ground and 90 degrees from the longitudinal direction of the airdrop item. Tiedown provisions attached to the same structure member in the same orientation need not be tested.

5.6.2 Suspension provisions. Each individual suspension provision shall have a test load (F) applied equal to or greater than 0.5 times the design limit load designated for each pair of forward and aft provisions. The angle of pull for each provision in the longitudinal direction will be applied at an angle of approximately 45 degrees up from the horizontal towards the CG of the item. The angle of pull in the lateral direction will be determined by the angle formed by the two adjacent side slings when joined at the apex. Nine foot sling lengths will be used for items when the longitudinal distance between provisions is 9 feet or less and a length equal to the longitudinal distance between provisions above 9 feet.

Source: https://assist.dla.mil -- Downloaded: 2016-12-11T00:45Z
Check the source to verify that this is the current version before use.

5.6.3 Low velocity extraction provision. A low velocity extraction provision shall have a test load (F) equal to or greater than the design limit load applied in the longitudinal direction.

5.6.4 LAPES extraction provisions. The LAPES extraction provisions shall have a test load (F) applied equal to or greater than the design limit load as described in paragraph 5.3.3.2.

6. NOTES

(This section contains information of a general or explanatory nature that may be helpful, but is not mandatory.)

6.1 Issue of DODISS. When this standard is used in acquisition, the applicable issue of DODISS must be cited in the solicitation (see 2.1.1).

6.2 Integral documents. The details of MIL-STD-669 and AR 70-47 are essential to the requirements of this document. The specific requirements of the above documents will be invoked as required by the procuring activity or the contracting officer.

6.3 Associated documents.

Specifications	- MIL-STD-1791, Designing for Internal Aerial Delivery in Fixed Wing Aircraft
Standards	- MIL-STD-209, Slinging and Tiedown Provisions for Lifting and Tying Down Military Equipment
HANDBOOKS	- AMCP 706-130: Design for Air Transport and Airdrop of Materiel
	- AFSC Design Handbook DH1-11: Air Transportability (describes airdrop technique and equipment)

6.4 Container loads. Items with an airdrop weight of approximately less than 2100 pounds and dimensions less than 48 inches wide by 96 inches long by 48 inches high can be delivered by container airdrop. Items delivered by an airdrop container do not require tiedown provisions, suspension provisions, or extraction provisions.

6.5 Review and approval of new and developmental items for airdrop testing. Provisions must successfully withstand static strength tests. Design data and static test results shall be submitted to the U.S. Army Natick Research, Development, and Engineering Center for review and coordination with the USAF prior to actual airdrop testing.

Source: https://assist.dla.mil -- Downloaded: 2016-12-11T00:45Z
Check the source to verify that this is the current version before use.

6.6 Maximum width and height of airdrop items. The width of an airdrop item may be up to 103 inches provided there is sufficient access between the item and airdrop platform tiedown provisions to properly restrain the item to the platform. The rigged height shall be determined by adding the height of the rigging material (10 inches for rubber tire vehicles or vehicles with suspension systems, and 15.5 inches for all other items) to the height profile of the airdrop item. The rigged item center of gravity is determined by using the CG of the suspended item and the center of gravity of recovery parachutes (CG of the suspended item approximately equals the CG of the airdrop item). The weight and dimensions of the recovery parachutes are in table V. If there is available space, the parachutes shall be placed on top of the airdrop item flush with the extraction provisions (aft) end on the vehicle. Otherwise, the parachutes will be placed on the aft end of the platform.

TABLE V. Weight and dimensions of recovery parachutes

Suspended weight	Weight of recovery parachutes (lbs.)	Dimensions of parachutes (inches)		
		Height	Lateral	Longitudinal
1,800 - 5,000	300	18	32	50
5,001 - 10,000	600	18	64	50
10,001 - 15,000	900	36	64	50
15,001 - 20,000	1200	36	64	50
20,001 - 25,000	1600	36	96	50
25,001 - 30,000	1900	36	96	50
30,001 - 35,000	2300	52	96	50
35,001 - 39,400	2600	52	96	50

The height of the rigged load forward of the rigged CG shall not exceed the limits of the curve shown in figure 9. Rearward of the rigged CG the rigged height must be less than 100 inches. The absolute maximum height of rubber tire vehicles is 90 inches in order to meet the requirements of MIL-STD-669 and allow for shimming in order to meet the C-141 roller loadings limits. Items must be rigged for airdrop and be measured to verify the height profile. The measured height profile is then sent to the Air Force for approval prior to actual airdrop testing.

Source: https://assist.dla.mil -- Downloaded: 2016-12-11T00:45Z
Check the source to verify that this is the current version before use.

6.7 International standardization agreements. Certain provisions in 5.1, 5.2, and 5.3 of this standard are subject to international standardization agreements ASCC Air Standard 44/21 and NATO-STD-3548. When notices, revisions, or cancellations of this standard are proposed which affect or violate the international agreements concerned, the preparing activity will take appropriate reconciliation action through international standardization channels, including departmental standardization offices, if required.

6.8 Subject term (key word) listing.

LAPES
Parachute
Platform
Rigging
LVAD

6.9 Changes from previous issue. Marginal notations are not used in this revision to identify changes with respect to the previous issue due to the extensiveness of the changes.

Custodians:

Army - GL
Navy - AS
Air Force - 99

Review activities:

Army - TR
Navy - MC
Air Force - 82

Preparing activity:

Army - GL

(Project 1670-0798)

Source: https://assist.dla.mil -- Downloaded: 2016-12-11T00:45Z
Check the source to verify that this is the current version before use.

YIELD STRENGTH STRENGTH LB	MIN. CLEAR OPENING DIA. ("D" IN.)	MIN. DIA. OF CROSS SECT. ("A" IN.)	MAX. DIA. OF CROSS SECT. ("A" IN.)
5000	2.0	0.4375	0.787
10000	2.5	0.750	0.787
20000	2.5	0.875	1.000

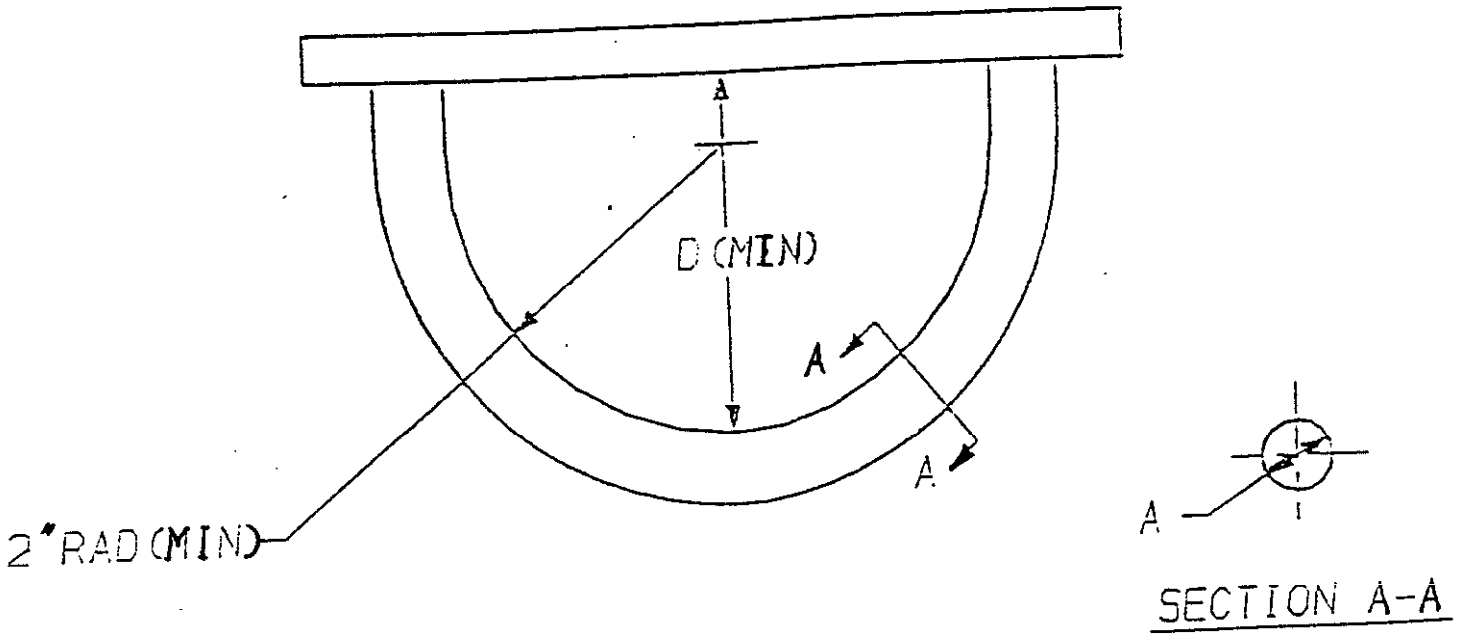

NOTES:

1. "MINIMUM CLEAR OPENING" DEFINES THE DIAMETER OF THE CROSS SECTION OF A ROUND BAR WHICH WILL PASS THROUGH THE FITTING.

FIGURE 1. Tiedown provision design and dimensional requirements.

Source: https://assist.dla.mil -- Downloaded: 2016-12-11T00:45Z
Check the source to verify that this is the current version before use.

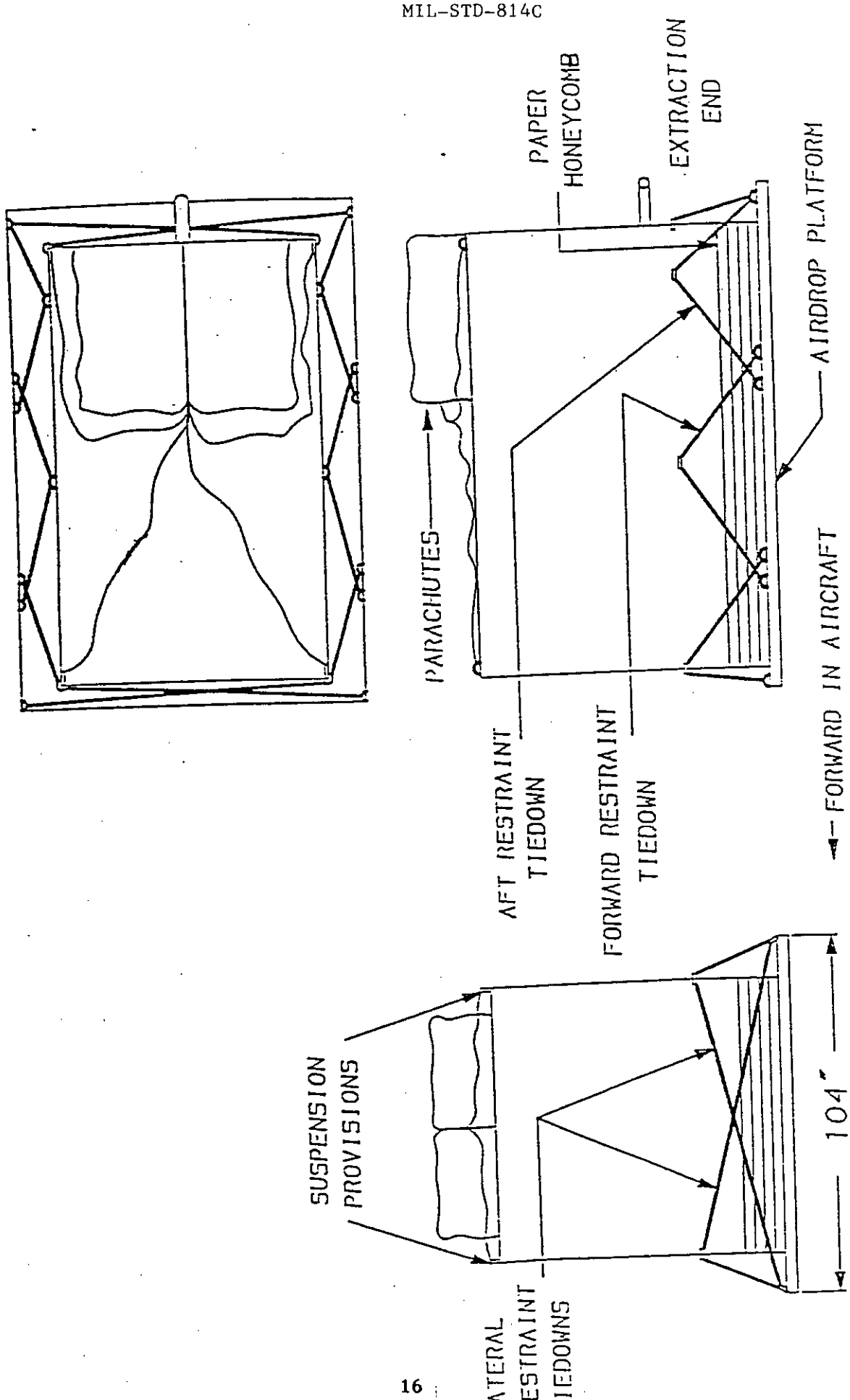

FIGURE 2. Typical rigged load showing tiedowns.

Source: https://assist.dla.mil -- Downloaded: 2016-12-11T00:45Z
Check the source to verify that this is the current version before use.

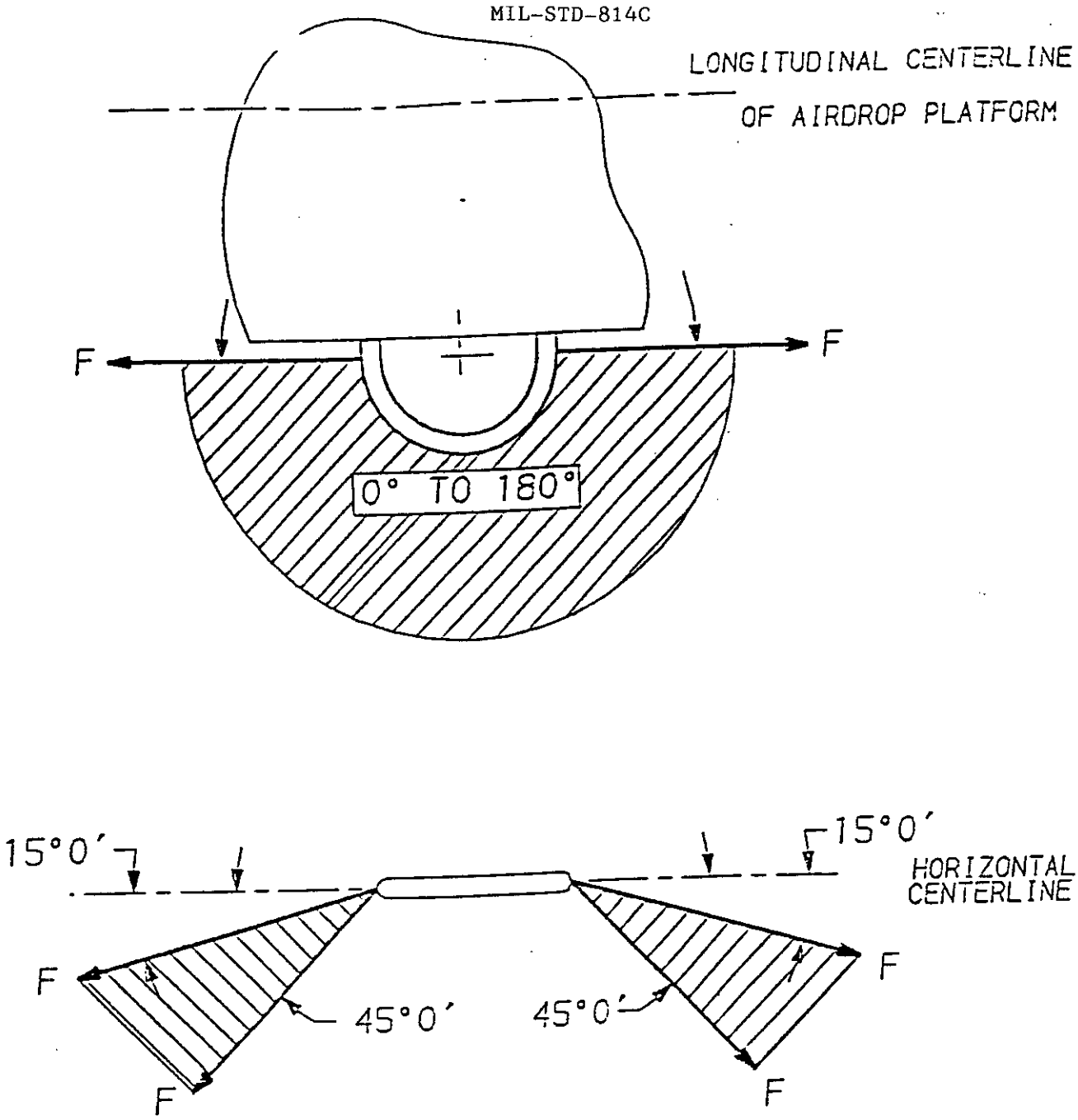

NOTES:

DESIRED ANGLE OF TIEDOWN IS 30° DOWN FROM THE HORIZONTAL AND 30° FROM THE LONGITUDINAL CENTERLINE.

FIGURE 3. Tiedown provision limits of direction of loading.

Source: https://assist.dla.mil -- Downloaded: 2016-12-11T00:45Z
Check the source to verify that this is the current version before use.

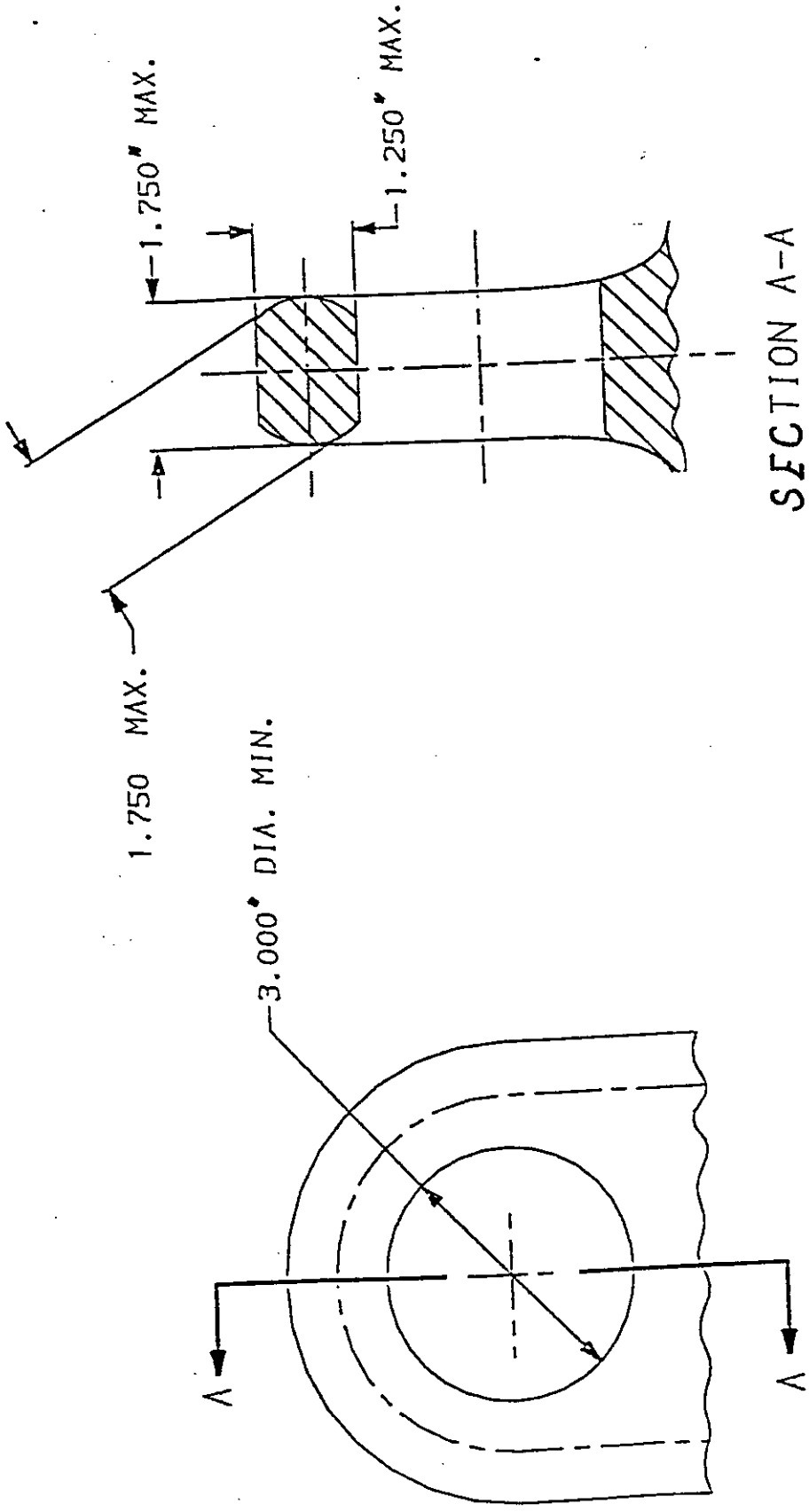

FIGURE 4. Dimensional requirements.

a. Suspension provision
b. Two point LAPES extraction provision for items with an airdrop weight of greater than 19,810 pounds

Source: https://assist.dla.mil -- Downloaded: 2016-12-11T00:45Z
Check the source to verify that this is the current version before use.

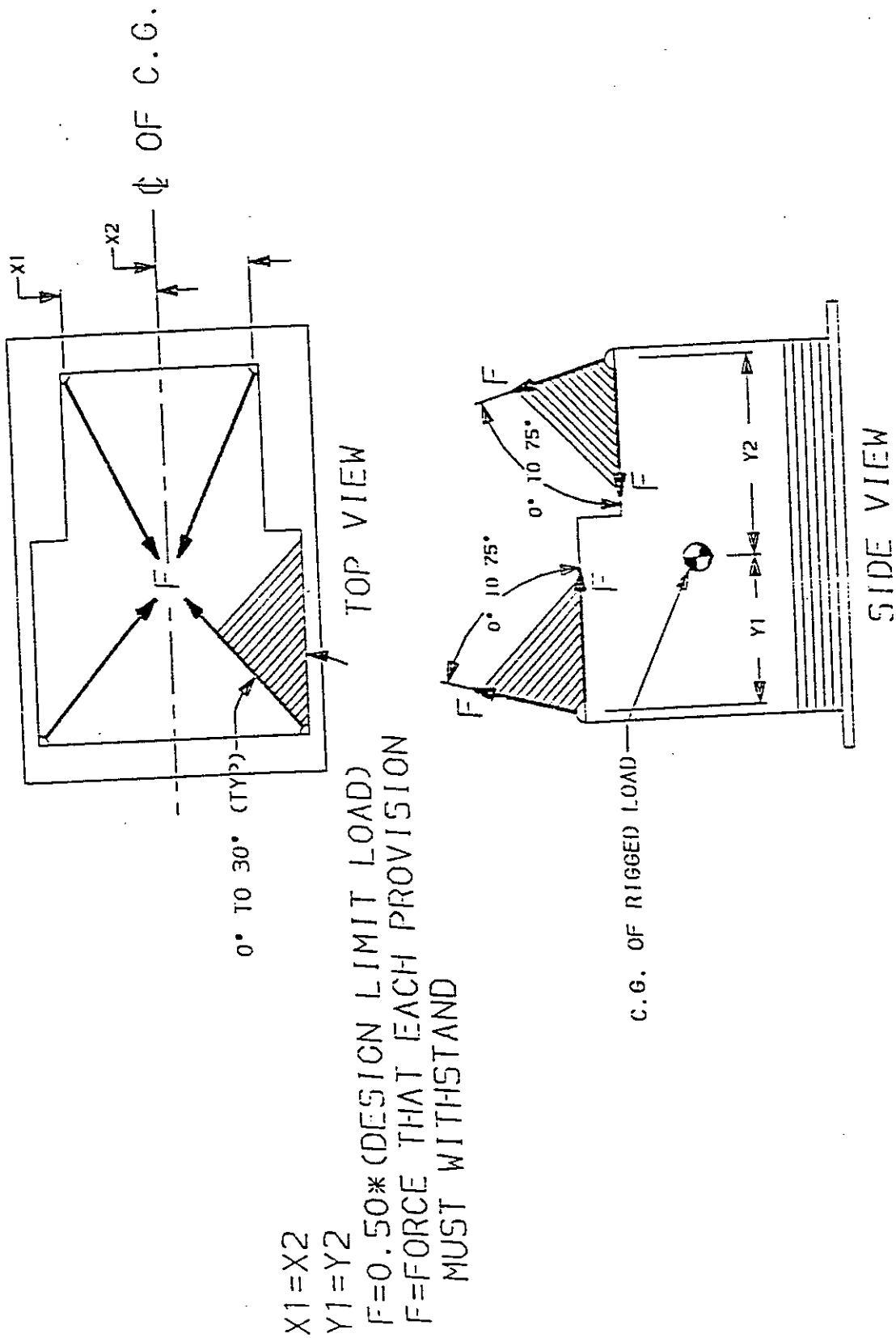

FIGURE 5. Suspension provisions, Direction of loading and locations.

Source: https://assist.dla.mil -- Downloaded: 2016-12-11T00:45Z
Check the source to verify that this is the current version before use.

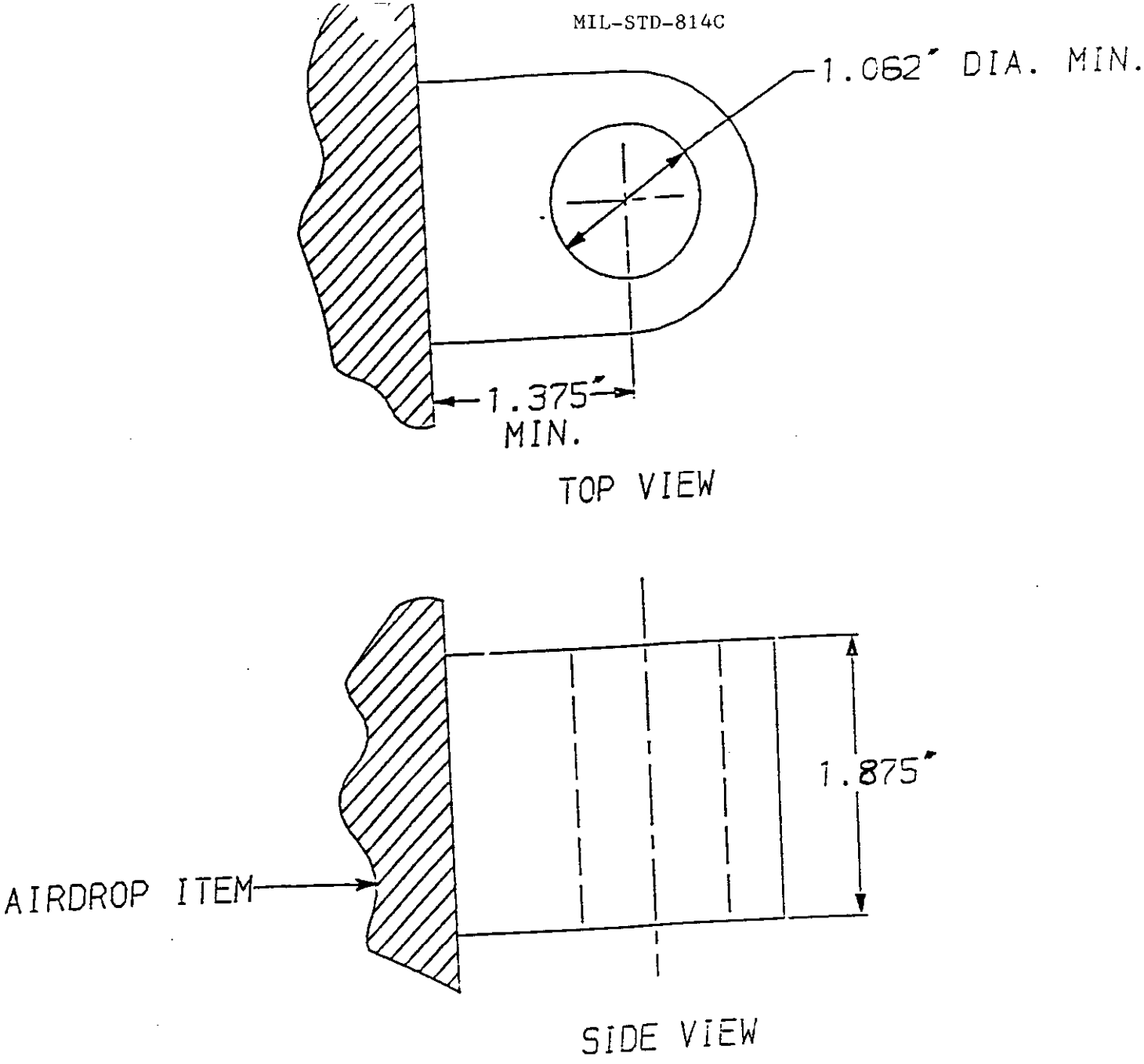

NOTES:

1. Existing vehicle towbars and pintles may be used if they meet the dimensional requirements of figure 6B

FIGURE 6A. Low velocity airdrop extraction provision dimensional requirements for items with an airdrop weight between 14,500 pounds and 34,236 pounds.

Source: https://assist.dla.mil -- Downloaded: 2016-12-11T00:45Z
Check the source to verify that this is the current version before use.

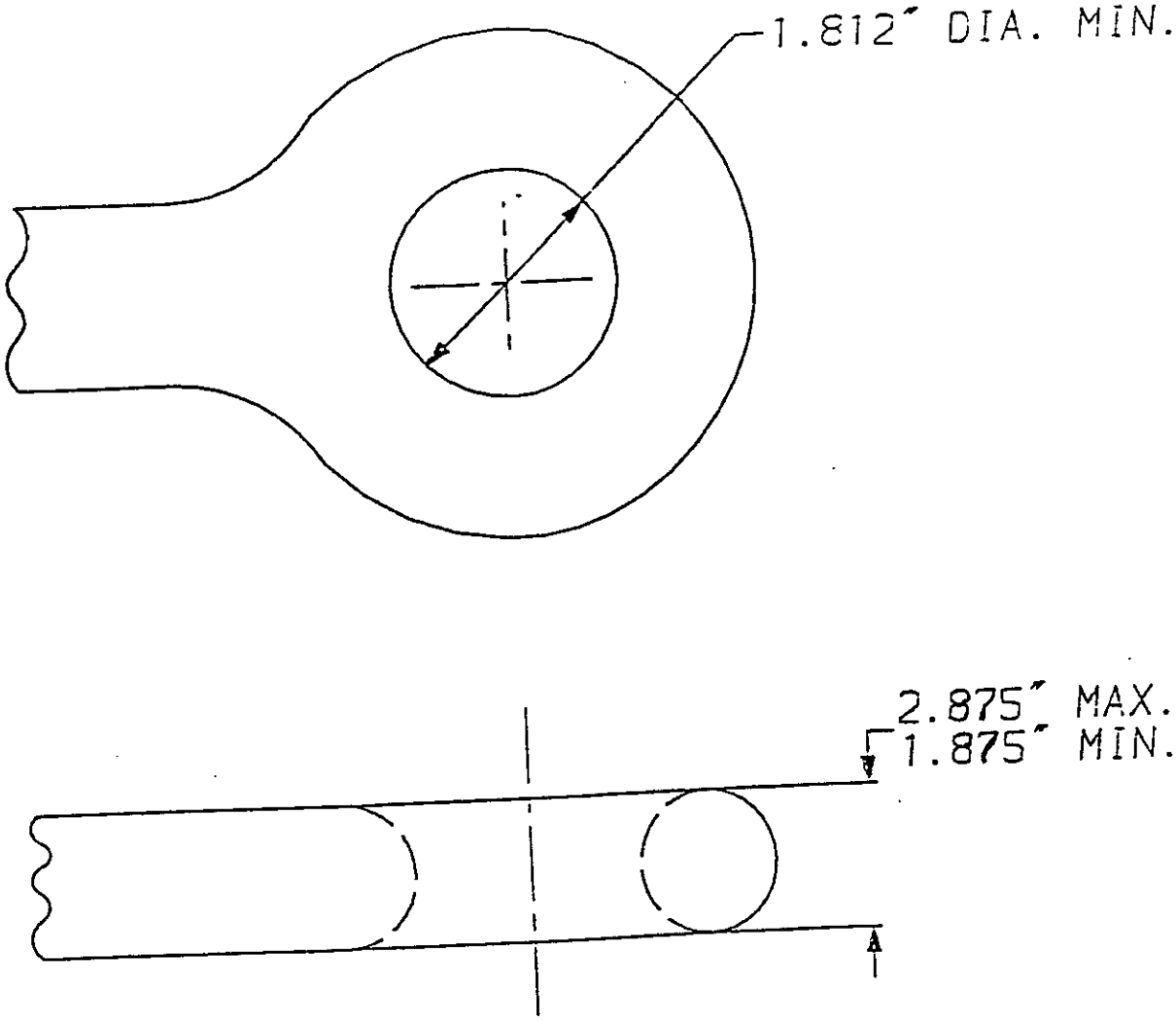

FIGURE 6B. Low velocity extraction provision dimensional requirements for existing towbars and pintles.

Source: https://assist.dla.mil -- Downloaded: 2016-12-11T00:45Z
Check the source to verify that this is the current version before use.

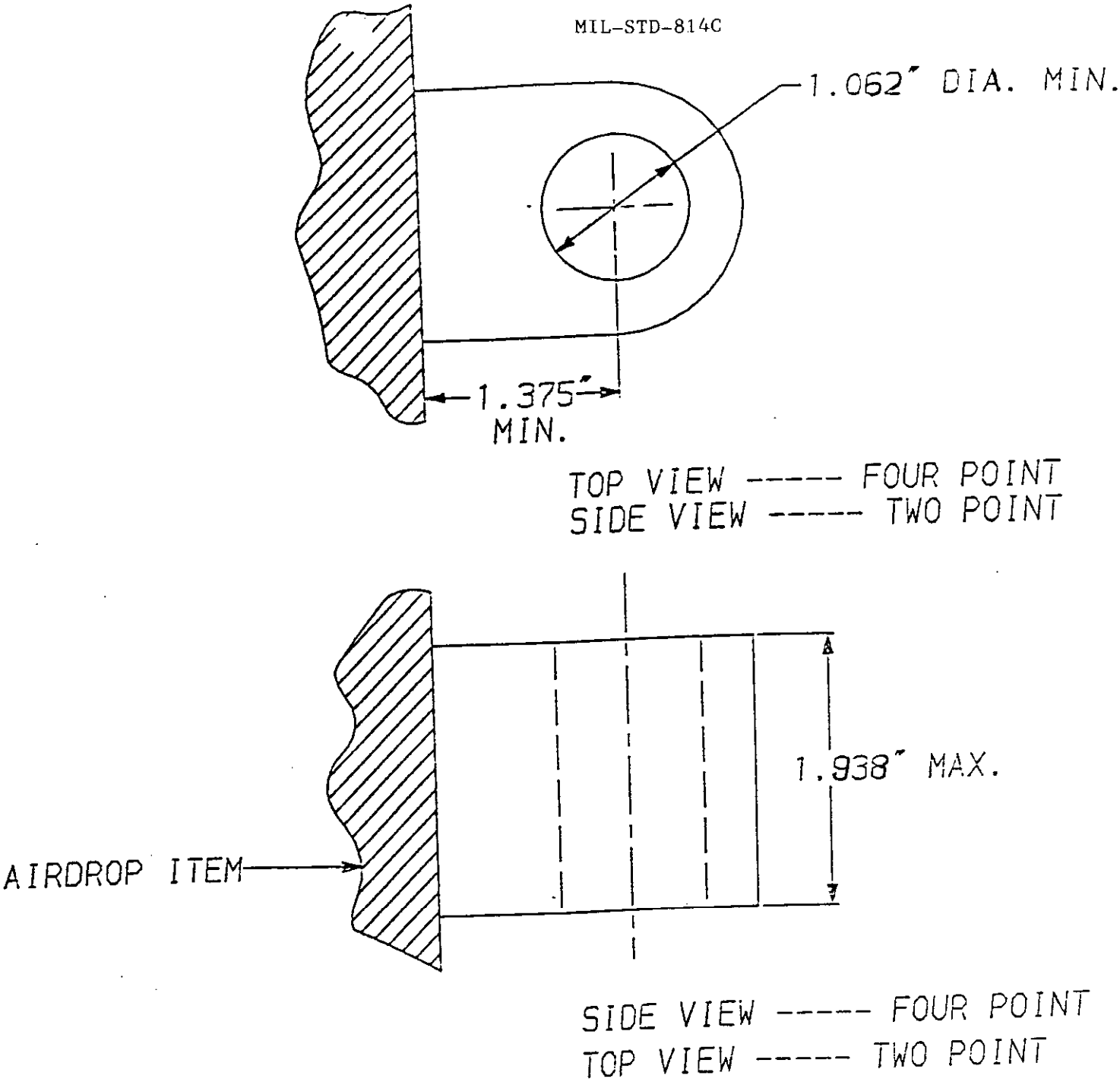

FIGURE 7. LAPES requirements for two point extraction with an airdrop weight of 19,810 pounds or less; or four point extraction.

Source: https://assist.dla.mil -- Downloaded: 2016-12-11T00:45Z
Check the source to verify that this is the current version before use.

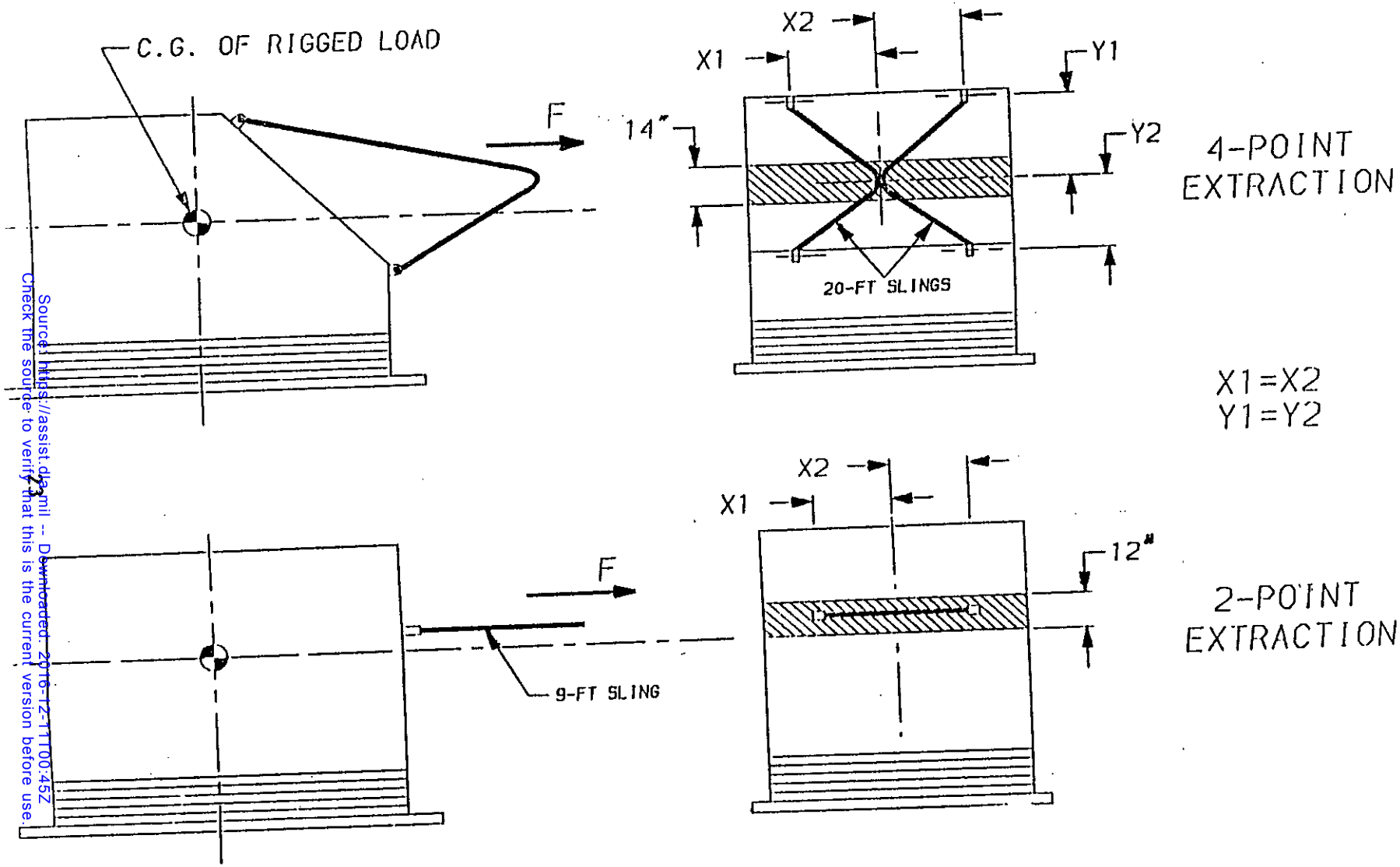

NOTES:

1. The extraction force (F) must be at a height within the shaded area.

2. Four point provisions must not be located within the shaded area.

FIGURE 8. Location of LAPES extraction provisions.

Source: https://assist.dla.mil -- Downloaded: 2016-12-11T00:45Z
Check the source to verify that this is the current version before use.

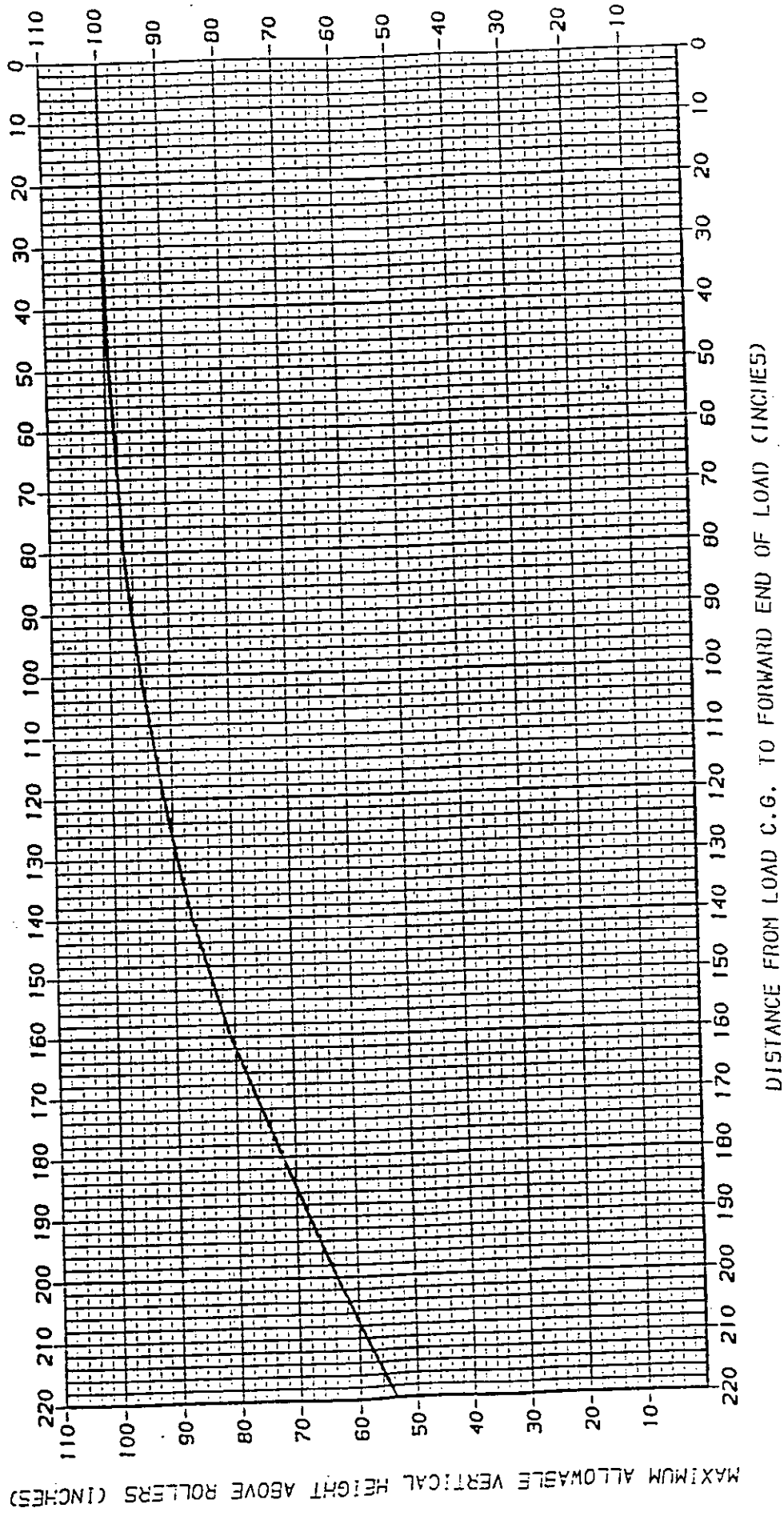

FIGURE 9. Tipoff curve.

Source: https://assist.dla.mil -- Downloaded: 2016-12-11T00:45Z
Check the source to verify that this is the current version before use.

STANDARDIZATION DOCUMENT IMPROVEMENT PROPOSAL

INSTRUCTIONS

1. The preparing activity must complete blocks 1, 2, 3, and 8. In block 1, both the document number and revision letter should be given.
2. The submitter of this form must complete blocks 4, 5, 6, and 7.
3. The preparing activity must provide a reply within 30 days from receipt of the form.

NOTE: This form may not be used to request copies of documents, nor to request waivers, or clarification of requirements on current contracts. Comments submitted on this form do not constitute or imply authorization to waive any portion of the referenced document(s) or to amend contractual requirements.

I RECOMMEND A CHANGE:	1. DOCUMENT NUMBER	2. DOCUMENT DATE (YYMMDD)
	MIL-STD-814C	1993 February 23

3. DOCUMENT TITLE
REQUIREMENTS FOR TIEDOWN, SUSPENSION AND EXTRACTION PROVISIONS ON MILITARY MATERIEL FOR AIRDROP

4. NATURE OF CHANGE *(Identify paragraph number and include proposed rewrite, if possible. Attach extra sheets as needed.)*

5. REASON FOR RECOMMENDATION

6. SUBMITTER

a. NAME (Last, First, Middle Initial)	b. ORGANIZATION	
c. ADDRESS (Include Zip Code)	d. TELEPHONE (Include Area Code) (1) Commercial (2) AUTOVON (If applicable)	7. DATE SUBMITTED (YYMMDD)

8. PREPARING ACTIVITY

a. NAME	b. TELEPHONE (Include Area Code) (1) Commercial	(2) AUTOVON/DSN
U.S. Army Natick RD&E Center	508-651-4531	256-4531
c. ADDRESS (Include Zip Code) Commander, U.S. Army Natick RD&E Center ATTN: SATNC-UXT Natick, MA 01760-5017	IF YOU DO NOT RECEIVE A REPLY WITHIN 45 DAYS, CONTACT: Defense Quality and Standardization Office 5203 Leesburg Pike, Suite 1403, Falls Church, VA 22041-3466 Telephone (703) 756-2340 AUTOVON 289-2340	

Source: https://assist.dla.mil -- Downloaded: 2016-12-11T00:45Z
Check the source to verify that this is the current version before use.