MILITARY SPECIFICATION SHEET

TERMINI, FIBER OPTIC, CONNECTOR, REMOVABLE, ENVIRONMENT RESISTING, CLASS 5, TYPE II, STYLE A, PIN TERMINUS, FRONT RELEASE CERAMIC GUIDE BUSHING (FOR MIL-C-28876 CONNECTORS)

This specification is approved for use by all Departments and Agencies of the Department of Defense.

The requirements for acquiring the product described herein shall consist of this specification sheet and the issue of the following specification listed in that issue of the Department of Defense Index of Specifications and Standards (DODISS) specified in the solicitation: MIL-T-29504.

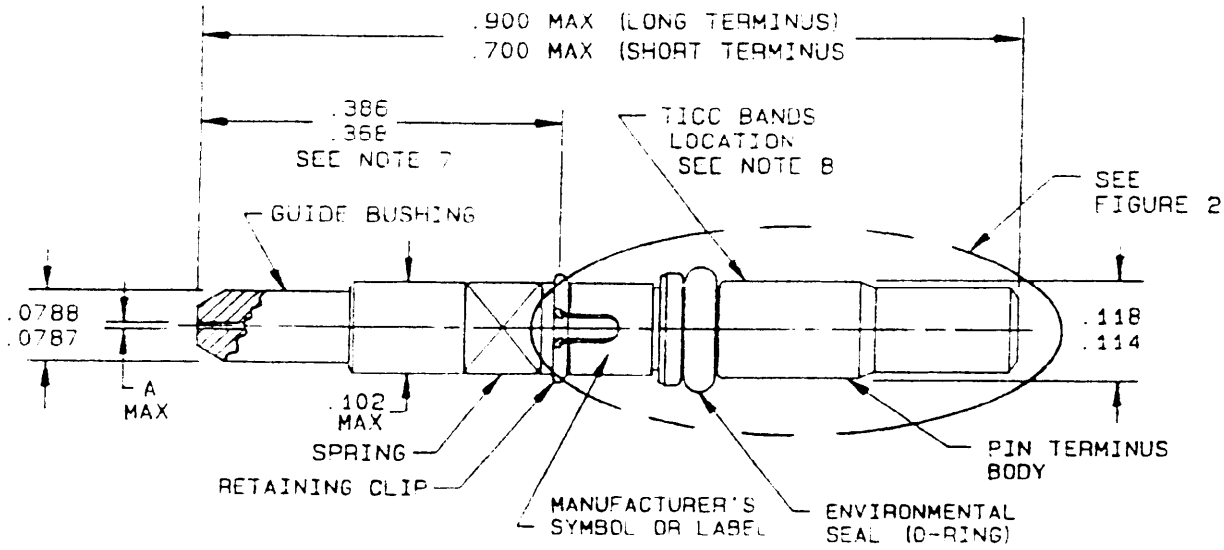

FIGURE 1. Pin terminus

DISTRIBUTION STATEMENT A. Approved for public release; distribution is unlimited.

Source: https://assist.dla.mil -- Downloaded: 2016-12-10T05:48Z
Check the source to verify that this is the current version before use.

Inches	mm
.001	0.025
.0787	1.999
.0788	2.002
.101	2.57
.102	2.59
.104	2.64
.114	2.90
.118	3.00
.121	3.07
.125	3.17
.300	7.62
.368	9.35
.386	9.80
.900	22.86

NOTES:

1. Dimensions are in inches.
2. Metric equivalents are given for general information only.
3. Guide bushing "A" diameter is based upon 1.00 inch = 25400.0 µm or 1.00 µm = 0.00003937 inch.
4. All diameters to be concentric within .002 (0.05 mm).
5. Dimensions apply after plating.
6. (O-ring) shall be a fluorosilicon material.
7. Dimension .386 (9.80 mm) or .368 (9.35 mm) to be measured when installed in connector equivalent gauge fixture. See figure 3.
8. The TICC bands shall be at the rear of the pin terminus.
9. The .700 (17.78 mm) dimension is a maximum for the short terminus.
10. The TICC bands shall not appear on the short terminus. The individual bag or container shall either have both the TICC band or the equivalent MIL-T-29504 Part or Identifying Number (PIN) marking on the container or on a tag inside the container.

FIGURE 1. Pin terminus - Continued.

Source: https://assist.dla.mil -- Downloaded: 2016-12-10T05:48Z
Check the source to verify that this is the current version before use.

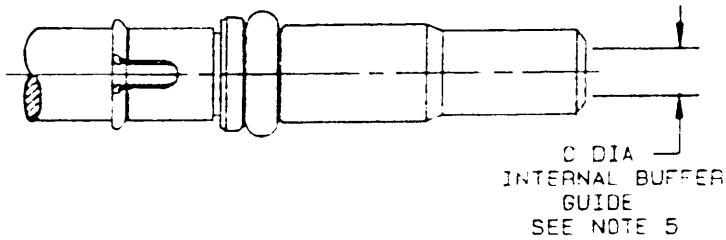

C diameter (Internal buffer guide)	
Inches	mm
.056 .053	1.42 1.35

NOTES

1. Dimensions are in inches.
2. Metric equivalents are given for general information only.
3. All diameters to be concentric within .002 (0.05 mm).
4. Dimensions shown after plating.
5. The "C" diameter of the internal buffer guide is used to center the optical waveguide fiber buffer.

FIGURE 2. Terminus internal buffer guide.

Source: https://assist.dla.mil -- Downloaded: 2016-12-10T05:48Z
Check the source to verify that this is the current version before use.

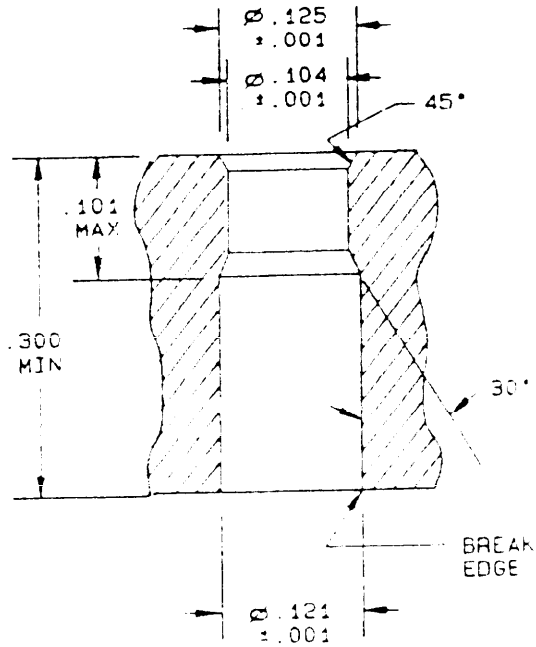

Inches	mm
.001	0.03
.101	2.57
.104	2.64
.121	3.07
.125	3.18
.300	7.62

NOTES:
1. Dimensions are in inches.
2. Metric equivalents are given for general information only.
3. All diameters to be concentric within .002 (0.05 mm).
4. Dimensions shown after plating.

FIGURE 3. Insert equivalent fixture for terminus measurement.

Source: https://assist.dla.mil -- Downloaded: 2016-12-10T05:48Z
Check the source to verify that this is the current version before use.

REQUIREMENTS:

Temperature: -55°C to +85°C operating, -62°C to +85°C storage.

Design and construction: See figures 1 and 2 and table I.

Weight: Not greater than 1.0 gram.

Adhesives: Use Hysol 1c, Epotek 330 or 353 series or equivalent as approved by the qualifying activity. Mixing and curing instructions shall be supplied with the assembly instructions provided with each terminus or applicable connector.

Material: Guide bushing, ceramic.

Tools: See table II.

Mating termini: MIL-T-29504/15.

Crimp sleeve: (2.5 mm) to be supplied with termini when specified in PIN.

The following MIL-T-29504 requirements are not applicable to this specification sheet:

Insertion loss	Optical discontinuities
Temperature life	Terminus retention
Terminus engagement and separation forces	Terminus cleaning
	Thermal shock
Shock	Vibration
Mating durability	Salt spray

PIN:

M29504/14	-XXXX	S
Basic specification and specification sheet	Dash number (TICC number, see table I)	Crimp sleeve (optional)

Qualification: To qualify or requality termini to this specification sheet, all requirements of MIL-C-28876 shall be met using the qualifying terminus in a connector qualified to MIL-C-28876. Multimode termini shall be granted qualification upon the successful qualification of single mode termini. Short termini shall be granted qualification upon the successful qualification of long termini.

Usage: Termini compliant with this specification sheet may be used in connectors other than MIL-C-28876 at the discretion of the acquiring activity.

Source: https://assist.dla.mil -- Downloaded: 2016-12-10T05:48Z
Check the source to verify that this is the current version before use.

TABLE I. TICC numbers and dimensions for guide bushing.

TICC number				A diameter 1/	
multimode (long)	singlemode (long)	multimode (short)	singlemode (short)	inches +0.0004 -0.0000	um 2/
4127	4137	4147	4157	0.00480	122.0
4128	4138	4148	4158	0.00484	123.0
4129	4139	4149	4159	0.00488	124.0
4130	4140	4150	4160	0.00492	125.0
4131	4141	4151	4161	0.00496	126.0
4132	4142	4152	4162	0.00500	127.0
4133	4143	4153	4163	0.00504	128.0
4134	4144	4154	4164	0.00551	140.0
4135	4145	4155	4165	0.00560	142.0
4136	4146	4156	4166	0.00567	144.0

1/ For maximum performance, terminii should be selected for the best (tightest) fit to the fiber. Fitting the next size larger terminus to a fiber may affect connector performance.
2/ Rounded to the nearest 0.5 um

TABLE II. Tools

End size	Insertion tool	Removal tool	Polishing fixture tool
1b	M81969/46-01 or M81969/49-01	M81969/47-01	Hughes PN 4568334H

Patent notice: The Government does not have a royalty free license under the following patents for the benefit of manufacturers of the item, either for the Government or for use in equipment to be delivered to the Government.

Patent number	Patent expiration date
US 4707068	11/17/2004

Source: https://assist.dla.mil -- Downloaded: 2016-12-10T05:48Z
Check the source to verify that this is the current version before use.

CONCLUDING MATERIAL

Custodians:
Army - CR
Navy - SH
Air Force - 85
NASA - NA

Review activities:
Army - MI
Navy - AS, MC
Air Force - 17, 19, 80, 90, 99

User activities:
Navy - OS, YD
Air Force - 13, 14

Preparing activity:
Navy - SH

Agent:
DLA - ES

(Project 6060-0096-3)

Source: https://assist.dla.mil -- Downloaded: 2016-12-10T05:48Z
Check the source to verify that this is the current version before use.

Source: https://assist.dla.mil -- Downloaded: 2016-12-10T05:48Z
Check the source to verify that this is the current version before use.