INCH-POUND

MIL-C-39014E
4 December 1990
SUPERSEDING
MIL-C-39014D
16 October 1984

MILITARY SPECIFICATION

CAPACITOR, FIXED, CERAMIC DIELECTRIC (GENERAL PURPOSE) ESTABLISHED RELIABILITY, GENERAL SPECIFICATION FOR

This specification is approved for use by all Departments and Agencies of the Department of Defense.

1. SCOPE

1.1 Scope. This specification covers the general requirements for established realibility (ER), general purpose, ceramic dielectric, insulated, fixed capacitors, for use in application where appreciable variations in capacitance with respect to temperature, voltage, frequency, and life can be tolerated(see 6.1). Capacitors covered by this specification have failure rate levels ranging from 1.0 to 0.001 percent per 1,000 hours. These failure rate levels are established at a 90-percent confidence level and maintained at a 10-percent producer's risk and based on life tests performed at maximum rated voltage at maximum rated temperature. An acceleration factor of 8:1 has been used to relate life test data obtained at 200 percent of rated voltage at maximum rated temperature, to rated voltage at rated temperature. A Part Per Million (PPM) quality system is used for documenting and reporting the average outgoing quality of capacitors supplied to this specification. Statistical Process Control(SPC) techniques are required in the manufacturing process to minimize variation in production of capacitors supplied to the requirements of this specification.

1.2 Classification. Capacitors covered by this specification shall be classified by the style, as specified (see 3.1).

2. APPLICABLE DOCUMENTS

2.1 Government documents.

2.1.1 Specifications, standards, and handbooks. The following specifications, standards, and handbooks form a part of this document to the extent specified herein. Unless otherwise specified, the issues of these documents are those listed in the issue of the Department of Defense Index of Specifications and Standards (DODISS) and supplement thereto, cited in the solicitation (see 6.2).

Beneficial comments (recommendations, additions, and deletions) and any pertinent data which may be of use in improving this document should be addressed to: US Army Laboratory Command, ATTN: SLCET-R-S, Fort Monmouth, NJ 07703-5302, by using the self-addressed Standardization Document Improvement Proposal (DD Form 1426) appearing at the end of the document or by letter.

FSC 5910

AMSC N/A
DISTRIBUTION STATEMENT A: Approved for public release; distribution is unlimited.

Source: https://assist.dla.mil -- Downloaded: 2016-11-16T17:58Z
Check the source to verify that this is the current version before use.

SPECIFICATIONS

MILITARY

MIL-C-39028	-	Capacitors, Packaging of.
MIL-I-46058	-	Insulating Compound, Electrical (For Coating Printed Circuit Assemblies).

(See supplement 1 for list of associated specification sheets.)

STANDARDS

FEDERAL

FED-STD-H28	-	Screw Thread Standards for Federal Services.

MILITARY

MIL-STD-202	-	Test Methods for Electronic and Electrical Component Parts.
MIL-STD-690	-	Failure Rate Sampling Plans and Procedures.
MIL-STD-790	-	Reliability Assurance Program for Electronic Parts Specifications.
MIL-STD-810	-	Environmental Test Methods.
MIL-STD-1276	-	Leads for Electronic Component Parts.

(Unless otherwise indicated, copies of federal and military specifications, standards, and handbooks are available from the Standardization Documents Order Desk, Building 4D, 700 Robbins Avenue, Philadelphia, PA 19111-5094.)

2.2 Non-Government publications. The following documents form a part of this document to the extent specified herein. Unless otherwise specified, the issues of the documents which are DoD adopted are those listed in the issue of the DODISS cited in the solicitation. Unless otherwise specified, the issues of documents not listed in the DODISS are the issues of the documents cited in the soliciation (see 6.2).

ELECTRONIC INDUSTRIES ASSOCIATION (EIA)

EIA-554	-	Assessment of Outgoing Nonconforming Levels in Parts Per Million (PPM).
EIA-557	-	Statistical Process Control Systems.

(Non-Government standards and other publications are normally available from the organizations that prepare or distribute the documents. These documents also may be available in or through libraries or other informational services.)

2.3 Order of precedence. In the event of a conflict between the text of this specification and the references cited herein (except for associated detail specifications, specification sheet or MS standards), the text of this specification shall take precedence. Nothing in this specification however, shall supersede applicable laws and regulations unless a specific exemption has been obtained.

3. REQUIREMENTS

3.1 Specification sheets. The individual item requirements shall be as specified herein and in accordance with the applicable specification sheets. In the event of any conflict between the requirements of this specification and the specification sheets, the latter shall govern (see 6.2).

Source: https://assist.dla.mil -- Downloaded: 2016-11-16T17:58Z
Check the source to verify that this is the current version before use.

3.2 Qualification. Capacitors furnished under this specification shall be products which are authorized by the qualifying activity for listing on the applicable qualified products list at the time of award of contract (see 4.4 and 6.3). In addition, the manufacturer shall obtain certification from the qualifying activity that the reliability assurance requirements of 4.1.1 have been met and are being maintained. Authorized distributors which are approved to MIL-STD-790 distributor requirements by the qualified product list (QPL) manufacturers are listed in the QPL.

3.3 Reliability and quality.

3.3.1 Reliability. Reliability of capacitors furnished under this specification shall be established and maintained in accordance with the procedures and requirements specified in MIL-STD-790 and MIL-STD-690 with details specified in 4.1.1, 4.4.4.1, and 4.5.

3.3.2 Quality.

3.3.2.1 Statistical process control (SPC). The contractor shall implement and use statistical process control techniques in the manufacturing process for parts covered by this specification. The SPC program shall be developed and maintained in accordance with EIA-557. The SPC program shall be documented and maintained as part of the overall reliability assurance program as specified in MIL-STD-790. The implementation date for statistical process control shall be 12 months from the date of this specification. Processes for application of SPC techniques should include but are not limited to the following:

a. Raw material mixing and blending.

b. Dielectric sheet manufacturing.

c. Stacking and electrode printing.

d. Laminating and dicing.

e. Chip firing.

f. Termination.

g. Packaging.

3.3.2.2 Quality levels. The quality of lots that have been subjected to and have passed the subgroup 1 100 percent screening inspections of the group A inspection shall be established and maintained in accordance with 4.6.1.2 and EIA-554, method B. Individual PPM defect levels (i.e., PPM-2 and -3) and an overall PPM defect level (i.e.,PPM-5) shall be established, based on the tests prescribed in the subgroup 3 test of the group A inspections. The defect level for PPM-2 shall be less than 100 PPM. Data shall not be excluded from the appropriate PPM calculation unless specifically authorized by the qualifying activity. Guidance for exclusion of data is specified in EIA-554.

3.4 Materials. Materials shall be as specified herein. However, when a definite material is not specified, a material shall be used which will enable the capacitors to meet the performance requirements of this specification. Acceptance or approval of any constituent material shall not be construed as a guaranty of the acceptance of the finished product.

3.4.1 Insulating and impregnating compounds. Insulating and impregnating compounds, including resins, varnishes, waxes, and the like, shall be suitable for each particular application. Compounds shall preserve the electrical characteristics of the insulation to which they are applied.

3.5 Design, construction, and physical dimensions. Capacitors shall be of the design, construction, and physical dimensions specified (see 3.1).

Source: https://assist.dla.mil -- Downloaded: 2016-11-16T17:58Z
Check the source to verify that this is the current version before use.

3.5.1 Terminal lead finish. The terminal lead finish shall be in accordance with codes 31, 32, and 52 of MIL-STD-1276 (Note: The 200 microinch maximum dimension for code 52 is not applicable).

3.5.2 Solder dip (retinning). The manufacturer (or his authorized category C distributor) may solder dip/retin the leads of capacitors supplied to this specification, provided the solder dip process has been approved by the qualifying activity.

3.5.2.1 Qualifying activity approval. Approval of the solder dip process will be based on one of the following options:

a. When the original lead finish qualified was hot solder dip lead finish 52 in accordance with MIL-STD-1276 (NOTE: The 200 microinch maximum thickness is not applicable). The manufacturer shall use the same solder dip process for retinning as was used in the original manufacture of the capacitor.

b. When the lead originally qualified was not solder dip lead finish 52 of MIL-STD-1276 as prescribed in 3.5.2.1a, approval for the process to be used for solder dip shall be based on the following procedure:

(1) Thirty samples of any capacitance value for each style 1/ and lead finish shall be subjected to the manufactuer's solder dip process. The capacitors shall then be subjected to all group A, subgroup I post-electrical tests, with no defects allowed. (NOTE: If radiographic inspection and hermetic seal testing are required in group A, these tests shall also be performed, with no defects allowed).

(2) Ten of the 30 samples shall then be subjected to the solderability test, with no defects allowed.

(3) The remaining 20 samples shall be subjected to the resistance to soldering heat test, followed by the moisture resistance test (or seal test if the capacitor is hermetically sealed), with no defects allowed.

3.5.2.2 Solder dip/retinning options. If the manufacturer (or his authorized category C distributor) solder dips or retins the leads as a part of normal production, or as a corrective action for solderability test failure, the following shall apply:

a. Following any solder dip or retinning process, the electrical tests as specified in group A, subgroup 3 shall be performed on a 200 piece sample for each eight hours of manufacturing. In the event of one or more defects, the individual production lot (or lots) from which the defects originated shall be subjected to 100 percent testing for dielectric withstanding voltage, insulation resistance (at 25°C), capacitance, and dissipation factor, must meet the PDA requirements as specified in 4.6.1.2.1.

b. PPM-2 date following solder dip/retinning shall be reported each six months. The calculation method shall be in accordance with EIA-554, method B.

1/ If hermetic and nonhermetic constructions are included, 30 samples of the hermetic and 30 samples of the nonhermetic construction shall be tested. Also, the seal test shall be performed in place of the moisture resistance test for hermetic construction.

Source: https://assist.dla.mil -- Downloaded: 2016-11-16T17:58Z
Check the source to verify that this is the current version before use.

3.5.3 Threaded parts. All threaded parts shall be in accordance with FED-STD-H28.

3.6 Thermal shock and voltage conditioning. When tested as specified in 4.7.2, capacitors shall withstand the extremes of high and low temperature without visible damage and meet the following requirements:

Dielectric withstanding voltage (at 25°C) - - - - - - - - - - - - - - - -	As specified in 3.9.
Insulation resistance (at 25°C)- - - - - - -	Shall not be less than the value shown on figure 1 unless otherwise specified (see 3.1).
Insulation resistance (at elevated (ambient temperature)- - - - - - - - - - -	Shall not be less than the value shown on figure 1 unless otherwise specified (see 3.1).
Dissipation factor (at 25°C) - - - - - - - -	Shall not exceed the value specified (see 3.1).
Capacitance (at 25°C)- - - - - - - - - - - -	Shall be within the tolerance specified (see 3.1).

3.7 Capacitance. When measured as specified in 4.7.3, the capacitance shall be within the specified tolerance (see 3.1).

3.8 Dissipation factor. When determined as specified in 4.7.4, the dissipation factor shall not exceed the percent specified (see 3.1).

3.9 Dielectric withstanding voltage. Capacitors shall withstand direct current (dc) potential specified in 4.7.5 without damage of breakdown.

3.10 Barometric pressure. Capacitors shall withstand the dc potential specified in 4.7.6 without flashover or damage.

3.11 Insulation resistance. When measured as specified in 4.7.7, the insulation resistance shall be not less than the value specified on figure 1, unless otherwise specified (see 3.1).

3.12 Seal (when specified, see 3.1). When tested as specified in 4.7.8, capacitors shall show no evidence of leakage.

3.13 Solderability. When capacitors are tested as specified in 4.7.9, the dipped surface of the leads shall be at least 95 percent covered with a new, smooth, solder coating. The remaining 5 percent may contain only small pinholes or rough spots; these shall not be concentrated in one area. Bare base metal where the solder dip failed to cover the original coating is an indication of poor solderability, and shall be cause for failure. In case of dispute, the percent of coverage with pinholes or rough spots shall be determined by actual measurement of these areas, as compared to the total area.

3.14 Voltage-temperature limits. The capacitance change over the range of temperatures specified in 4.7.10 shall not exceed the limits specified (see 3.1). The capacitance value obtained in step C of table VI shall be considered as the reference point.

Source: https://assist.dla.mil -- Downloaded: 2016-11-16T17:58Z
Check the source to verify that this is the current version before use.

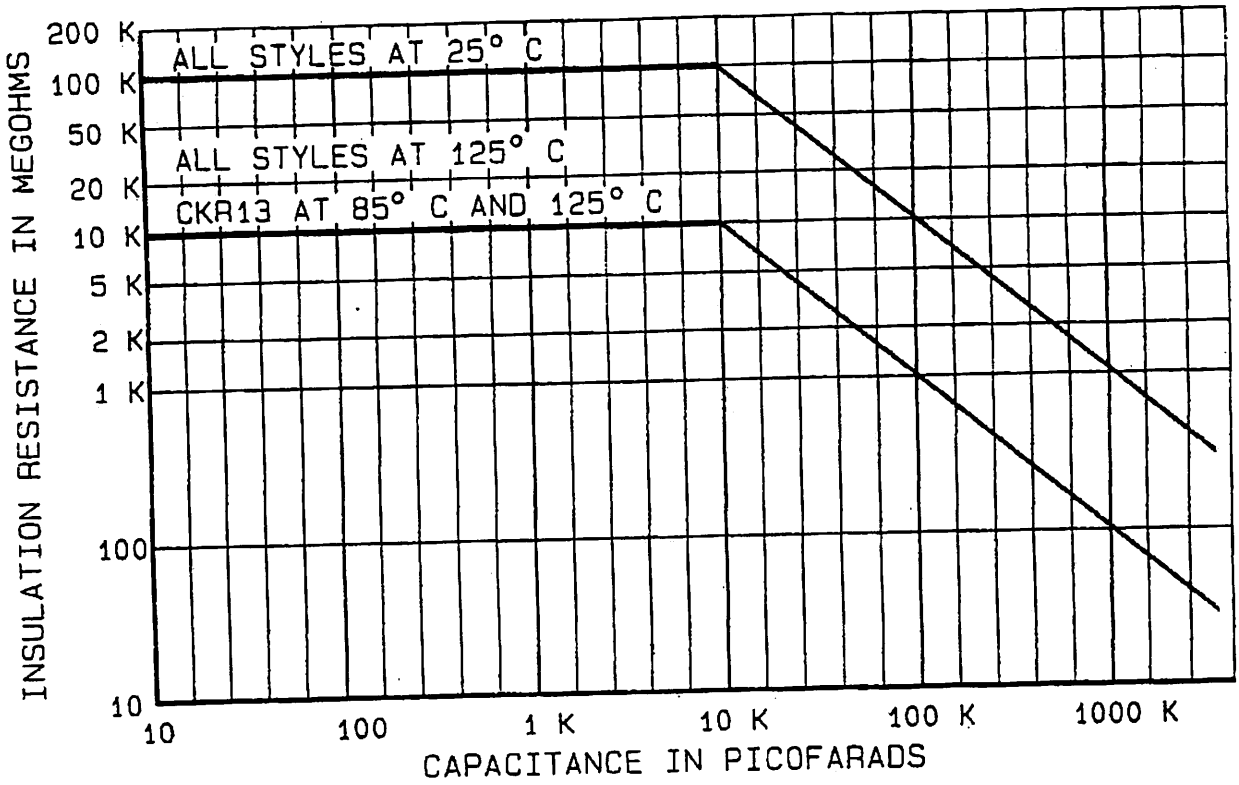

FIGURE 1. Insulation resistance versus capacitance.

Source: https://assist.dla.mil -- Downloaded: 2016-11-16T17:58Z
Check the source to verify that this is the current version before use.

3.15 Vibration, high frequency. When capacitors are tested as specified in 4.7.11, there shall be no intermittent contacts of 0.5 millisecond (ms) or greater duration, open- or short-circuiting, or evidence of mechanical damage.

3.16 Immersion. When tested as specified in 4.7.12, capacitors shall meet the following requirements:

Visual examination - - - - - - - - - - - - -	No mechanical damage. Marking shall remain legible.
Dielectric withstanding voltage - - - - - -	As specified in 3.9.
Insulation resistance - - - - - - - - - - - -	Not less than the value specified (see 3.1).
Capacitance - - - - - - - - - - - - - - - - -	Unless otherwise specified (see 3.1), change not to exceed ±10 percent of initial measured value.
Dissipation factor - - - - - - - - - - - - - -	Shall not exceed initial limits.

3.17 Salt spray (corrosion) (applicable as specified (see 3.1). When tested as specified in 4.7.13, there shall be no harmful or extensive corrosion, and at least 90 percent of any exposed metallic surfaces of the capacitor shall be protected by the finish. There shall be no mechanical damage to insulating surfaces. In addition, corrosion of the mounting hardware or of the terminals shall not exceed 10 percent of the surface area. Marking shall remain legible after the test.

3.18 Shock, specified pulse. When tested as specified in 4.7.14, there shall be no momentary or intermittent contact of 0.5 ms or greater duration, open- or short-circuiting, or other evidence of breakdown, arcing, and mechanical damage.

3.19 Terminal strength (applicable unless otherwise specified, see 3.1). When capacitors are tested as specified in 4.7.15, there shall be no loosening or rupturing of the terminals.

3.20 Moisture resistance. When tested as specified in 4.7.16, capacitors shall meet the following requirements:

Visual examination - - - - - - - - - - - - -	No mechanical damage. Marking shall remain legible.
Dielectric withstanding voltage- - - - - - -	As specified in 3.9.
Insulation resistance - - - - - - - - - - - -	Unless otherwise specified (see 3.1), not less than 10 percent of the initial 25°C requirement.
Capacitance - - - - - - - - - - - - - - - - -	Unless otherwise specified (see 3.1), change not to exceed ±10 percent from initial measured value.

3.21 Fungus. The manufacturer shall certify that all external materials are fungus resistant or shall perform the test specified in 4.7.17. When capacitors are tested as specified in 4.7.17, examination shall not disclose evidence of fungus growth on the external surface.

Source: https://assist.dla.mil -- Downloaded: 2016-11-16T17:58Z
Check the source to verify that this is the current version before use.

3.22 Resistance to soldering heat. When tested as specified in 4.7.18, capacitors shall meet the following requirements:

Insulation resistance at 25°C- - - - - - - -	Unless otherwise specified (see 3.1), not less than the initial 25°C requirement.
Capacitance- - - - - - - - - - - - - - - - - -	Shall change not more than the percent specified (see 3.1) from the initial measured value.
Dissipation factor - - - - - - - - - - - - - -	Shall not exceed the initial limits.

3.23 Resistance to solvents. When capacitors are tested as specified in 4.7.19, there shall be no evidence of mechanical damage and the marking shall remain legible.

INK - - - Capacitors that are marked with ink (INK) or that are laser etched and back filled with ink shall be examined in Qualification Inspection and group A.

OLM - - - Capacitors that the bodies are over-coated and then laser marked (OLM) shall be examined in Qualification Inspection and group A.

NLM - - - Capacitors that the bodies are not over-coated prior to laser marking (NLM) and are etched directly into the bodies shall be examined in Qualification Inspection and group B.

3.24 Life (at elevated ambient temperature). When tested as specified in 4.7.20, capacitors shall meet the following requirements:

Insulation resistance (at elevated ambient temperature) - - - - - - - - - - - - - - - -	Shall be not less than the value specified (see 3.1).
Visual examination - - - - - - - - - - - - - -	No mechanical damage. Marking shall remain legible.
Insulation resistance (at 25°C)- - - - - - -	Shall be not less than the value specified (see 3.1).
Capacitance- - - - - - - - - - - - - - - - - -	Change not to exceed the percent specified from the initial measured value (see 3.1).
Dissipation factor - - - - - - - - - - - - - -	Shall not exceed the value specified (see 3.1).

3.25 Low temperature storage. When tested as specified in 4.7.21, capacitors shall withstand the low temperature specified without evidence of mechanical damage.

3.26 Radiographic inspection (for qualification and FR level 'S', when specified, see 3.1). When capacitors are tested as specified in 4.7.22, radiographic examination shall not disclose evidence of improperly made connections, substandard soldering or structural weakness, or attached solder particles or slivers.

Source: https://assist.dla.mil -- Downloaded: 2016-11-16T17:58Z
Check the source to verify that this is the current version before use.

3.27 Marking. Capacitors shall be marked as specified herein. Paper labels shall not be used. Other markings which in any way interfere with, obscure, or confuse those specified herein, are prohibited. Each capacitor shall be legibly marked with smear-resistant ink that will withstand the environmental conditions specified herein. At the option of the manufacturer, capacitors may be laser marked. The marking shall remain legible after all tests.

3.27.1 Marking legibility (laser marking only). When tested as specified in 4.7.1.1 the marking shall remain legible.

3.27.2 Substitution of failure rate levels. A manufacturer may supply to all higher failure rate levels than to which he is qualified. Items of an exponential FRL as shown in table I and marked to lower FRL's with procuring agency approval, are substitutable for higher FRL's, and shall not be remarked unless specified in the contract or purchase order (see 6.2), the lot date codes on the parts are unchanged, and the workmanship criteria is met.

TABLE I. Failure rate level substitutability.

Parts qualified to failure rate level	Are substitutable for failure rate level
S	M, P, and R
R	M and P
P	M

3.27.3 Substitution of capacitance tolerance and voltage. Parts qualified and marked to tigher capacitance tolerance or higher rated voltage, with procuring agency approval, are substitutable for parts marked to looser capacitance tolerance or lower rated voltage, provided all other values, such as case size, characteristic, and leads are the same. The substitutable parts shall not be remarked unless specified in the contract or purchase order (6.2), the lot date code on the parts are unchanged, and the workmanship criteria is met.

3.27.4 "JAN" and "J" marking. The United States Government has adopted, and is exercising legitmate control over the certification marks "JAN" and "J", respectively, to indicate that items so marked or identified are manufactured to, and meet all the requirements of military specification. Accordingly, items acquired to, and meeting all of the criteria specified herein and in applicable specifications shall bear the certification mark "JAN" except that items too small to bear the certification mark "JAN" shall bear the letter "J". The "JAN" or "J" shall be placed before the PIN except that if such location would place a hardship on the manufacturer in connection with such marking, the "JAN" or "J" may be located on the first line above or below the PIN. Items furnished under contracts or orders which either permit or require deviation from the conditions or requirements specified herein or in applicable specifications shall not bear "JAN" or "J". In the event an item fails to meet the requirements of this specification and the applicable specification sheets or associated detail specifications, the manufacturer shall remove the "JAN" or the "J" from the sample tested and also from all items represented by the sample. The "JAN" or "J" certification mark shall not be used on products acquired to contractor drawings or specifications. The United States Government has obtained Certificate of Registration Number 504,860 for the certification mark "JAN".

3.27.5 Full marking. Unless otherwise specified (see 3.1), capacitors shall be marked with the "JAN" or "J" marking, PIN, date code and lot number, manufacturer's name (not trademark) or the Commercial and Government Enitity (CAGE) code, voltage, capacitance, and capacitance tolerance. There shall be no space between the symbols which comprise the PIN. The date code and lot number shall consist of the year, week, and lot code. For example: The third week of 1984 would be 8403.

Source: https://assist.dla.mil -- Downloaded: 2016-11-16T17:58Z
Check the source to verify that this is the current version before use.

At the option of the manufacturer, the marking may be placed on one side of the capacitor, in the same order as shown in the example. Additional marking is permitted, following the required marking or on the opposite side, as long as it conforms to 3.27.

EXAMPLE:

	Front	Back	
Abbreviated military	M39014	8420A	Date and lot code
PIN	2-1201	J 100 V	"J" brand and voltage rating
Manufacturer's name or CAGE	12345	122 K	Capacitance and tolerance

Tolerance K = ±10%, M = ±20%
Multiplier
2nd significant digit
1st significant digit

NOTE: This example is for radial lead and disc styles. Tubular styles will be marked as above except it shall appear as six lines, front followed by back, in the order shown.

3.28 Workmanship. Capacitors shall be processed in such a manner as to be uniform in quality when using 2X minimum to 4X maximum magnification. External leads shall not exhibit cuts, nicks, or scrapes exceeding 10 percent of the diameter for round and flat leadwire parts, except as follows:

a. Round leads: Within .050 (1.27 mm) of the body of the component, 10 percent of the surface area of the leads may exhibit bare base metal. These capacitors are not expected to be solderable within .050 (1.27 mm) of the case.

b. Flat leads (Styles CKR22, CKR23, and CKR24): Surface of lead may exhibit bare base metal on edges except on installation portion of lead. These capacitor leads are not expected to be solderable above the plane of the body mounting base.

4. QUALITY ASSURANCE PROVISIONS

4.1 Responsibility for inspection. Unless otherwise specified in the contract, the contractor is responsible for the performance of all inspection requirements as specified herein. Except as otherwise specified in the contract, the contractor may use his own or any other facilities suitable for the performance of the inspection requirements specified herein, unless disapproved by the Government. The Government reserves the right to perform any of the inspections set fort in the specification where such inspections are deemed necessary to ensure supplies and services conform to prescribed requirements.

4.1.1 Reliability assurance program. A reliability assurance program shall be established and maintained in accordance with MIL-STD-790.

4.1.2 Statistical process control (SPC). An SPC program shall be established and maintained in accordance with EIA-557. Evidence of such compliance shall be verified by the qualifying activity as a prerequisite for qualification and retention of qualification.

4.2 Classification of inspections. The inspections specified herein are classified as follows:

a. Qualification inspection (see 4.4).

b. Verification of qualification (see 4.5).

c. Quality conformance inspection (see 4.6).

Source: https://assist.dla.mil -- Downloaded: 2016-11-16T17:58Z
Check the source to verify that this is the current version before use.

4.3 Inspection conditions and methods.

4.3.1 Conditions. Unless otherwise specified herein, all inspections shall be made in accordance with the "GENERAL REQUIREMENTS" of MIL-STD-202 except relative humidity shall not exceed 75 percent. Accuracy of all test voltage measurements shall be within ±2.0 percent of the specified voltage.

4.3.2 Methods.

4.3.2.1 Reference measurements. When requirements are based on comparative measurements made before and after conditioning, the reference measurement shall be considered the last measurement made at 25°C ±3°C prior to conditioning. Unless reference measurements have been made within 30 days prior to the beginning of conditioning, they shall be repeated.

4.3.3 Power supply. The power supply used for life testing shall have a regulation of ±2 percent or less of the specified test voltage.

4.4 Qualification inspection. Qualification inspection shall be performed at a laboratory acceptable to the Government (see 6.3), on sample units produced with equipment and procedures normally used in production.

4.4.1 Sample size. The number of capacitors to be subjected to qualification inspection shall be as specified in table II and the appendix of this specification. Each capacitor style shall be qualified separately.

4.4.2 Test routine. Sample units shall be subjected to the qualification inspection specified in table II, in the order shown. All sample units shall be subjected to the inspection of groups I and II. The sample shall then be divided as specified in table II for groups III through VIII or groups III through VI and VIII, as applicable (see 3.1), and subjected to the tests for their particular group. Samples which have been selected to be submitted to the life test shall be divided into two groups. One group shall be subjected to the accelerated condition and the other group to the rated condition. The decision as to whether or not the product is to be included on the qualified products list shall be made at the conclusion of the 1,000-hour life test. Each unit subjected to the accelerated condition shall be continued on for a total of 4,000 hours. Each unit subjected to the rated condition shall be continued on for a total of 32,000 hours.

4.4.3 Failures. Failures in excess of those allowed in table II shall be cause for refusal to grant qualification approval.

4.4.4 Failure rate level and quality level verification.

4.4.4.1 Failure rate (FR) qualification and lot conformance FR inspection. FR qualification and lot conformance FR inspection shall be in accordance with the general and detailed requirements of MIL-STD-690 with the following details.

a. Procedure I - Qualification at the initial failure rate level. Level "M" (1.0 percent) of FRSP-90 shall apply. Sample units shall be subjected to the qualification inspection specified in group I, table II (see 4.7.20.3.1).

b. Procedure II - Extension of qualification to lower failure rate levels. To extend qualification to the "P" (0.1 percent), FR level, data from two or more voltages within style and of similar construction may be combined. For FR levels "R" and "S", two or more styles of similar construction (see 4.6.1.1.1) may be combined.

Source: https://assist.dla.mil -- Downloaded: 2016-11-16T17:58Z
Check the source to verify that this is the current version before use.

TABLE II. Qualification inspection.

Inspection	Requirement paragraph	Test method paragraph	Number of sample units to be inspected	Number of defectives permitted 1/
Group I				
Thermal shock and voltage conditioning- - - - - -	3.6	4.7.2	All units	Not applicable
Radiographic inspection -	3.26	4.7.22	All units	Not applicable
Group II 2/				
Visual and mechanical examination:				
Material, design, construction, and workmanship - - - - -	3.4 to 3.5.1 incl, 3.28	4.7.1	192 or 216 3/	1
Physical dimensions and marking - - - - - - -	3.1 and 3.27 to 3.27.5, incl			
Capacitance - - - - - - -	3.7	4.7.3		
Dissipation factor- - - -	3.8	4.7.4		
Dielectric withstanding voltage - - - - - - - -	3.9	4.7.5		
Barometric pressure - - -	3.10	4.7.6		
Insulation resistance - -	3.11	4.7.7		
Seal (styles CKR17 and CKR18 only) - - - - - -	3.12	4.7.8		
Group III				
Low temperature storage -	3.25	4.7.21	6	1
Solderability - - - - - -	3.13	4.7.9		
Group IV				
Voltage-temperature limits	3.14	4.7.10	18	1
Vibration, high frequency	3.15	4.7.11		
Immersion - - - - - - - - -	3.16	4.7.12		
Salt spray (corrosion)- -	3.17	4.7.13		
Group V 4/				
Shock, specified pulse- -	3.18	4.7.14	18	1
Terminal strength 5/- - -	3.19	4.7.15		
Resistance to soldering heat- - - - - - - - - - -	3.22	4.7.18		
Moisture resistance - - -	3.20	4.7.16		

1

See footnotes at end of table.

Source: https://assist.dla.mil -- Downloaded: 2016-11-16T17:58Z
Check the source to verify that this is the current version before use.

TABLE II. Qualification inspection - Continued.

Inspection	Requirement paragraph	Test method paragraph	Number of sample units to be inspected	Number of defectives permitted 1/
Group VI				
Fungus 6/ - - - - - - - - -	3.21	4.7.17	4 } 10	} 1
Resistance to solvents- - (INK, OLM, and NLM) - - -	3.23	4.7.19	6	
Group VII				
Life (accelerated condition at 85°C) (style CKR13 only) - - - - - -	3.24	4.7.20.1.1	24	1
Group VIII				
Life (accelerated condition) - - - - - -	3.24	4.7.20.1	37 }	} 1
Life (rated condition)- -	3.24	4.7.20.1	102 }	

1/ A sample unit having one or more defects will be charged as a single defective.

2/ Nondestructive examinations and tests.

3/ One additional sample unit is included in each sample of 192 or 216 (as applicable) sample units to permit substitution for the permitted defective in group II.

4/ Moisture resistance test shall be performed once only in this group.

5/ Applicable, unless otherwise specified (see 3.1).

6/ Certification of fungus resistance may be substituted for testing.

Source: https://assist.dla.mil -- Downloaded: 2016-11-16T17:58Z
Check the source to verify that this is the current version before use.

c. Procedure III - Maintenance of failure rate level qualification. Maintenance period B of FRSP-10 shall apply. Regardless of the number of production lots produced during this period, the specified number of unit hours shall be accumulated to maintained qualification (see 4.5f.).

4.4.4.2 Quality level verification. The contractor is responsible for establishing a quality system to verify the PPM defect level of lots that are subjected to subgroup 2 tests of the group A inspections. The PPM defect level shall be maintained for each specification sheet. The PPM defect level shall be based on a 6-month moving average. The contractor shall verify and report individual PPM categories (i.e., PPM-2 and -3) and an overall PPM defect level (i.e., PPM-5). In the event that the contractor meets or exceeds 100 PPM for PPM-2 the qualifying activity shall take the action specified in 4.4.4.3.

4.4.4.3 Noncompliance. The contractor shall notify the qualifying activity when the 100 PPM level is reached or exceeded for PPM-2. The contractor shall provided sufficient information to the qualifying activity documenting the causes of the problem and what corrective action is being taken. Failure to correct this problem shall be the basis for removal of the affected product from the QPL.

4.5 Verification of qualification. Every 6 months, the manufacturer shall compile a summary of the results of quality conformance inspections and where applicable, extended failure rate test data, in the form of a verification of qualification report, and forward it to the qualifying activity as the basis of continued qualification approval. In addition to the periodic submission of failure rate test data, the manufacturer shall immediately notify the qualifying activity whenever the failure rate data indicates that the manufacturer has failed to maintain his qualified failure rate level. Continuation shall be based on evidence that, over the 6-month period, the following has been met:

a. Verification by the qualifying activity that the manufacturer meets the requirements of MIL-STD-790.

b. The manufacturer has not modified the design of the item.

c. The specification requirements for the item have not been amended so far as to affect the character of the item.

d. Lot rejection for group A inspection does not exceed 10 percent or one lot, whichever is greater.

e. The requirements for group B inspection are met.

f. The records of all failure rate tests combined substantiate that the 1.0 percent/1,000 hours, or 0.1 percent/1,000 hours "P" failure rate levels have been maintained or that the manufacturer continues to meet the 0.01 percent/1,000 hours, or 0.001 percent/1,000 hours failure rate level for which qualified although the total component hours of testing does not, as yet meet the requirements of 4.4.4.1c.

g. The contractor shall provide documentation to the qualifying activity pertaining to PPM calculations including numbers of parts per style tested, individual PPM defect categories (i.e., PPM-2 and -3) and the overall PPM defect rate (PPM-5). This information shall be submitted on a specification sheet basis.

If group B test requirements were not met and the manufacturer has taken corrective action satisfactory to the Government, the forwarding of the verification of qualification report may be delayed until within 30 days after completion of retesting of the periodic quality conformance tests. In this case, the qualifying activity shall be notified of this condition within the time the original verification of qualification report was due. All reports shall be certified by the responsible company official. The qualifying activity shall be contacted for the report format.

Source: https://assist.dla.mil -- Downloaded: 2016-11-16T17:58Z
Check the source to verify that this is the current version before use.

4.5.1 Records. Test records shall be in accordance with the format in MIL-STD-690.

4.6 Quality conformance inspection.

4.6.1 Inspection of product for delivery. Inspection of product for delivery shall consist of group A inspection.

4.6.1.1 Inspection and production lot.

4.6.1.1.1 Inspection lot. An inspection lot shall consist of all capacitors of one or more styles and voltage-temperature limits, from the same production line or lines, produced under essentially the same conditions and offered for inspection during a single work week. Each lot shall be kept separate from every other lot. The sample from the lot shall be representatiave of the styles and highest capacitance values in the lot. All samples units belonging to a lot shall be identified by means of a code symbol (either letters or numbers, at the option of the manufacturer). The following styles may be combined:

Group	Style
1 - - - - - -	CKR04, CKR05
2 - - - - - -	CKR03, CKR06
3 - - - - - -	CKR11, CKR12, CKR13, CKR14, CKR15, CKR16 (voltage temperature limits may be combined)
4 - - - - - -	CKR17, CKR18, CKR20
5 - - - - - -	CKR75, CKR76, CKR82, CKR83
6 - - - - - -	CKR22, CKR23, CKR24
7 - - - - - -	CKR25, CKR26, CKR27
8 - - - - - -	CKR07, CKR08

Styles in a group may be combined for FR levels 'R' and 'S'; however, at least FR level 'P' must be maintained on each style. Styles in groups 1 and 2 may be combined for FR levels 'R' and 'S', however, at least FR level 'P' must be maintained on each style. Any or all styles in group 5 may be combined for 'M' FR level.

4.6.1.1.2 Production lot. A production lot shall consist of all capacitors of the same style, voltage rating, nominal capacitance value, voltage temperature characteristic, and termination finish. Manufacture of all parts in the lot shall have been started, processed, assembled, and tested as a group. Lot identity shall be maintained throughout the manufacturing cycle.

4.6.1.2 Group A inspection. Group A inspection shall consist of the inspections specified in table III.

4.6.1.2.1 Subgroup 1 tests. Subgroup 1 tests shall be performed on a production lot basis on 100 percent of the product supplied under this specification. Capacitors failing the tests of subgroup 1 shall be removed from the lot. If during the 100 percent inspection, screening requires that more than 8 percent of the capacitors be discarded, the entire lot shall be rejected.

Source: https://assist.dla.mil -- Downloaded: 2016-11-16T17:58Z
Check the source to verify that this is the current version before use.

TABLE III. Group A inspection.

Inspection	Requirement paragraph	Test method paragraph	Sampling procedures
Subgroup 1			
Seal (when specified, see 3.1)- - - - - - - - - -	3.12	4.7.8.1	100% inspection
Thermal shock and voltage conditioning 1/ - - -	3.6	4.7.2	100% inspection
Subgroup 2			
Radiographic inspection (FR level 'S', when specified)- - - - - - -	3.26	4.7.22	100% inspection
Subgroup 3 (PPM)			
Dielectric withstanding voltage (PPM-2) - - - -	3.9	4.7.5	See table IV
Insulation resistance (at +25°C) (PPM-2)- - -	3.9	4.7.6	
Dissipation factor(PPM-2)	3.8	4.7.5	
Capacitance (PPM-2) - - -	3.7	4.7.4	
Mechanical examination- -	3.5	4.7.2	
Design and construction -	3.5	4.7.2	
Dimensions only (PPM-3) -	3.5	4.7.1	
Subgroup 4			
Visual and mechanical examination			
Material- - - - - - - -	3.4 and 3.4.1	4.7.1	13 samples 0 failure
Physical dimensions - -	3.1		
Design and construction (other than physical dimensions) - - - - - -	3.5 and 3.5.1		
Marking 2/- - - - - - -	3.27		
Workmanship - - - - - -	3.28		
Seal (when specified, see 3.1)			
Fine leak- - - - - - -	3.12	4.7.8.2	13 samples 0 failure
Subgroup 5			
Solderability - - - - - -	3.13	4.7.9	13 samples 0 failures

See footnotes at end of table.

Source: https://assist.dla.mil -- Downloaded: 2016-11-16T17:58Z
Check the source to verify that this is the current version before use.

TABLE III. Group A inspection - Continued.

Inspection	Requirement paragraph	Test method paragraph	Sampling procedures
Subgroup 6			
Resistance to solvents 3/ (INK and OLM only)	3.23	4.7.19	12 samples 0 failure

1/ Post checks are required per 3.6.
2/ Marking defects are based on visual examination only. Any subsequent electrical defects shall not be used as a basis for determining marking defects.
3/ At the option of the manufacturer, solvent C of method 215, MIL-STD-202, may be deleted.

TABLE IV. Sampling plans for PPM categories.

Lot size	Sample size
1 - 125	100 percent
126 - 3,200	125
3,201 - 10,000	200
10,000 - 35,000	315
35,001 - 150,000	500
150,001 - 500,000	800
500,001 - Up	1,250

4.6.1.2.2 Manufacturer's production inspection. If the manufacturer performs tests similar to those specified in subgroup 1 or 2, table III, as the final step of his production process, group A, subgroup 1 or 2 may be waived and the data resulting from the manufacturer's production tests may be used instead. Authority to waive the subgroup 1 or 2 inspections shall be granted by the qualifying activity only. The following criteria must be complied with:

a. Tests conducted by the manufacturer during production shall be clearly identical to or more stringent than that specified for subgroup 1 or 2.

b. Manufacturer subjects 100 percent of the product supplied under this specification to his production tests.

c. The parameters measured and the failure criteria shall be the same or more stringent than those specified herein.

d. The lot rejection criterion is the same or more stringent than that specified herein.

Source: https://assist.dla.mil -- Downloaded: 2016-11-16T17:58Z
Check the source to verify that this is the current version before use.

e. The manufacturer shall make available all information concerning the test procedures and instrumentation used in his production tests. This data shall be provided as part of the evaluation required for MIL-STD-790. The manufacturer shall also make available to the Government all records of all detail test data resulting from production tests.

f. Once approved, the manufacturer shall not change the test procedures or criteria without prior notification and concurrence by the qualifying activity.

4.6.1.2.3 Rejected lots. Production lots exceeding the 8 percent PDA of group A, subgroup 1 inspection shall be segregated from new lots and lots that have passed inspection. Lots rejected may be offered for acceptance only if the manufacturer 100 percent retests to the requirements of subgroup 1. Resubmitted lots shall be kept separate and shall be clearly identified as resubmitted lots. If, during the 100 percent reinspection to subgroup 1, the lot exceeds 3 percent defective, the lot shall be rejected and shall not be resubmitted.

4.6.1.2.4 Subgroup 2. (Failure rate level "S" when specified, see 3.1). Capacitors shall be 100 percent inspected. Capacitors not meeting the inspection criteria shall be removed from the production lot and shall be supplied to this specification.

4.6.1.2.5 Subgroup 3 test (PPM categories).

4.6.1.2.5.1 Sampling plans. Subgroup 3 tests shall be performed on an inspection lot basis. Samples subjected to subgroup 3 shall be selected in accordance with table IV based on the size of the inspection lot. In the event of 1 or more failures the lot shall be rejected. Equipment and operators used to perform the subgroup 2 tests shall not be the same as those used in the subgroup 1 100 percent tests.

4.6.1.2.5.2 Rejected lots. The rejected lot shall be separated from new lots and those lots that have passed inspection. The rejected lot shall be 100 percent inspected for those quality characteristics found defective in the sample and any defectives found removed from the lot. A new sample of parts shall then be randomly selected in accordance with table IV. If 1 or more defects are found in this second sample the lot shall be rejected and shall not be supplied to this specification.

4.6.1.2.5.3 PPM calculations. PPM calculations shall be based on the results of the first sample check as prescribed in 4.6.1.2.3. Calculations and data exclusion shall be in accordance with appendix B. (Note: PPM calculations shall not use data on the second sample submission).

4.6.1.2.6 Subgroup 4. Subgroup 4 shall be performed on an inspection lot basis. Failed lots shall be 100 percent reworked or scrapped.

4.6.1.2.7 Subgroup 5.

4.6.1.2.7.1 Sampling plan. Thirteen samples shall be selected randomly from every inspection lot and subjected to the solderability test. The manufacturer may use electrical rejects from the subgroup 1 screening tests for all or part of the samples to be used for solderability testing. If there are one or more defects, the lot shall be rejected.

Source: https://assist.dla.mil -- Downloaded: 2016-11-16T17:58Z
Check the source to verify that this is the current version before use.

4.6.1.2.7.2 Rejected lots. In the event of one or more defects, the manufacturer may use one of the following options to rework the lot:

a. Each production lot that was used to form the failed inspection lot shall be individually submitted to the solderability test as required in 4.6.1.2.7.1. Production lots that pass the solderability test are available for shipment. Production lots failing the solderability test can be reworked only if submitted to the solder dip procedure in 4.6.1.2.7.2b.

b. The manufacturer shall submit the failed lot to a 100 percent solder dip. Two hundred sample units from this lot shall then be subjected to all group A, subgroup 1 post-electrical tests, with no defects allowed.

(1) If the 200 sample units pass the group A, subgroup 1 post-electrical tests, 13 additional units shall then be subjected to the solderability test, with no defects allowed. If there are one or more defects, the lot shall be considered rejected and shall not be furnished against the requirements of this specification.

(2) If the 200 sample units fail group A, subgroup 1 post-electrical tests, these tests shall be performed on 100 percent of the lot. The lot must meet the PDA requirements as specified in 4.6.1.2.1. If the PDA requirements are not met, the lot shall be considered rejected and shall not be furnished aganist the requirements of this specification. If the PDA requirements are met, 13 sample units shall be subjected to the solderability testing criteria of 4.6.1.2.7.2b(1).

4.6.1.2.7.3 Disposition of samples. The solderability test is considered a destructive test and samples submitted to the solderability test shall not be supplied on the contract or order.

4.6.1.2.8 Subgroup 6. Subgroup 6 shall be performed on an inspection lot basis. If there are one or more failures, a second sample from the same lot shall be subjected to the same test. If there are one or more failures in the second sample, the lot shall be rejected and shall not be supplied to this specification. Sample units which have been subjected to this test shall not be delivered on the contract or order.

4.6.2 Periodic inspection. Periodic inspection shall consist of group B inspection. Except where the results of this inspection show noncompliance with the applicable requirements (see 6.4), delivery of products which have passed group A inspection shall not be delayed pending the results of these periodic inspections.

4.6.2.1 Group B inspection. Group B inspection shall consist of the tests specified in table V in the order shown, and shall be performed on sample units selected from lots that have passed group A inspection. Test data obtained therefrom shall be reviewed as part of the complete verification of qualification. Capacitor styles manufactured during that month shall be represented, as far as practical, in at least the approximate ratio of production.

4.6.2.1.1 Sampling plan.

Source: https://assist.dla.mil -- Downloaded: 2016-11-16T17:58Z
Check the source to verify that this is the current version before use.

TABLE V. Group B inspection.

	Requirement paragraph	Test method paragraph	Number of sample units to be inspected	Number of defectives permitted 1/
Every 2 months				
Subgroup 1				
Voltage-temperature limits	3.14	4.7.10.2	18	1
Vibration, high frequency	3.15	4.7.11		
Immersion	3.16	4.7.12		
Salt spray (corrosion) (style CKR72)	3.17	4.7.13		
Subgroup 2 2/				
Shock, specified pulse	3.18	4.7.14	18	1
Terminal strength 3/	3.19	4.7.15		
Resistance to soldering heat	3.22	4.7.18		
Moisture resistance	3.20	4.7.16		
Subgroup 3				
Barometric pressure	3.10	4.7.6	6	1
Low temperature storage	3.25	4.7.21		
Marking legibility (laser marking only)	3.27.1	4.7.1.1		
Subgroup 4				
Resistance to solvents (NLM only)	3.23	4.7.19	4	0
Subgroup 5				
Life (4,000 hours accelerated conditions)	3.24	4.7.20.2.1	5 minimum per style	See 4.6.2.1.1.2
Subgroup 6				
Life (accelerated condition at 85°C) (style CKR13 only)	3.24	4.7.20.2.2	24	1

1/ A sample unit having one or more defects shall be charged as a single defective.

2/ Moisture resistance test shall be performed once only in this subgroup.

3/ Applicable unless otherwise specified, (see 3.1).

Source: https://assist.dla.mil -- Downloaded: 2016-11-16T17:58Z
Check the source to verify that this is the current version before use.

4.6.2.1.1.1 Subgroups 1 through 4. Forty-six sample units shall be taken from production every 2 months and subjected to the applicable tests for their particular subgroup. Permitted failures shall be as specified in table V.

4.6.2.1.1.2 Subgroup 5. A minimum of 5 sample units per style of highest capacitance value produced shall be selected from each inspection lot produced during a 2-month period. Permitted failures shall be as specified in MIL-STD-690. The accumulated data shall be used for maintenance and extension of failure rate qualification.

4.6.2.1.1.3 Subgroup 6 (style CKR13 only). Twenty-four sample units shall be taken from production every 2-months and be subjected to the test specified in subgroup 6. Permitted failures shall be as specified in table V.

4.6.2.1.2 Disposition of sample units. Sample units which have been subjected to group B inspection shall not be delivered on the contract.

4.6.3 Noncompliance. If a sample unit fails to pass group B inspection, the manufacturer shall notify the qualifying activity and cognizant inspection activity of such failure and take corrective action on the materials or processes, or both, as warranted, and on all units of product which can be corrected and which were manufactured under essentially the same conditions, with essentially the same materials and processes, and which are considered subject to the same failure. Acceptance and shipment of the product shall be discontinued until corrective action, acceptable to the Government, has been taken. After the corrective action has been taken, group B inspection shall be repeated on additional sample units (all inspections), or the inspection which the original sample failed, at the option of the qualifying activity. Group A inspection may be reinstituted: However, final acceptance shall be withheld until the group B inspection has shown that corrective action was successful. In the event of failure after reinspection, information concerning the failure and corrective action taken shall be furnished to the cognizant inspection activity and the qualifying activity.

4.7 Methods of examination and test.

4.7.1 Visual and mechanical examination. Capacitors shall be examined to verify that the materials, design, construction, physical dimensions, marking, and workmanship are in accordance with the applicable requirements. (See 3.1, 3.4 to 3.5.1 inclusive, 3.27 and 3.28).

4.7.1.1 Marking legibility (laser marking only, see 3.27.1). Capacitors shall be coated with .005 (0.13 mm) minimum of silicone resin insulating compound, type SR of MIL-I-46058. After curing, coated capacitors shall be examined for legibility under normal production room lighting by an inspector with normal or corrected 20/20 vision.

4.7.2 Thermal shock and voltage conditioning (see 3.6). Capacitors shall be subjected to the tests of 4.7.2.1 and 4.7.2.2, as applicable (see tables II and III).

4.7.2.1 Thermal shock. Capacitors shall be tested in accordance with method 107 of MIL-STD-202. The following details and exception shall apply:

a. Test condition A, except that in step 3, sample units shall be tested at the applicable high test temperature (see table II and 3.1).

b. Measurements before and after cycling - Not applicable for qualification inspection (all FR levels) and quality conformance inspection for FR levels 1.0, 0.1, 0.01 and 0.001 percent/1,000 hours.

Source: https://assist.dla.mil -- Downloaded: 2016-11-16T17:58Z
Check the source to verify that this is the current version before use.

4.7.2.2 Voltage conditioning. One of the voltage conditioning tests in 4.7.2.2.1 or 4.7.2.2.2 shall be performed. The lot traveler shall indicate which test is used. When the optional voltage conditioning test of 4.7.2.2.2 is used, the traveler shall include the specific accelerated voltage used and the test time (see figure 2).

4.7.2.2.1 Standard voltage conditioning. Voltage conditioning shall be started immediately after completion of the thermal shock test. The voltage conditioning shall consist of applying a mimimum of twice the rated voltage to the unit at the maximum rated temperature +4°, -0°C for 96 hours minimum. Voltage shall be applied and shall reach maximum value within one second, maximum. To assure that at least 95 percent of the applied test voltage is maintained for the duration of the exposure period, the following circuit shall be used.

After completion of the exposure period, the unit shall be allowed to stabilize at room temperature (25°C). After stabilization at room temperature, the dielectric withstanding voltage and insulation resistance shall be measured as specified in 4.7.5.1 and 4.7.7, respectively. After measurement of dielectric withstanding voltage and insulation resistance at 25°C, the unit shall be stabilized at maximum rated temperature and insulation resistance measure. After allowing the unit to stabilize at room temperature, the capacitance and dissipation factor shall be measured as specified in 4.7.3 and 4.7.4, respectively.

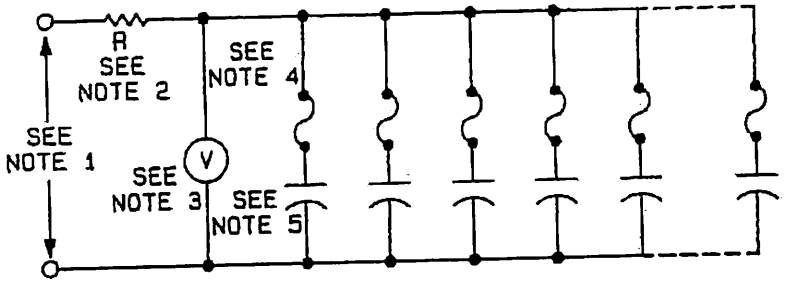

FIGURE 2. Test circuit.

NOTES:
1. The power supply shall be capable of providing a minimum of twice the rated voltage (or four times the rated voltage if optional voltage conditioning is used) of the capacitors at 30 mA minimum, per circuit.
2. The current limiting device shall be a resistor and/or a fuse. The current shall be limited to no less than 30 mA and no more than 10 A.
3. There shall be a voltage monitor that will trigger an alarm and shut off the test if the applied voltage drops by more than 5 percent.
4. Fuses shall be optional and resistors shall not be allowed. If fuses are used, the total resistance of the fuse, connections, and the connecting wires shall not exceed 50 ohms at +125°C.
5. The capacitor bank shall be no less than ten capacitors.

NOTE: Following a dielectric withstanding voltage or insulation resistance test, capacitance measurement may be delayed for a period of up to 24 hours.

Source: https://assist.dla.mil -- Downloaded: 2016-11-16T17:58Z
Check the source to verify that this is the current version before use.

4.7.2.2.2 Optional voltage conditioning. The manufacturer, with approval from the qualifying activity, may perform an optional voltage conditioning test instead of the standard voltage conditioning test of 4.7.2.2.1. All conditions of 4.7.2.2.1 apply, with the exception of the voltage applied and test time. The minimum time duration, T(test), shall be calculated as follows:

$$T(\text{test}) = \frac{800}{(E\ \text{test}/E\ \text{rated})^3}$$

Where: $2 \times E\ \text{rated} \leq E\ \text{test} \leq 4 \times E\ \text{rated}$

T(test) = Minimum test time in hours

E test = Applied voltage

E rated = Rated voltage of the capacitor

4.7.3 Capacitance (see 3.7). Capacitors shall be tested in accordance with method 305 of MIL-STD-202. The following detail and exception shall apply:

a. Test frequency - 1 megahertz ±100 kHz when the nominal capacitance is 100 pF or less, and 1 kHz ±100 Hz when the nominal capacitance is greater than 100 pF.

b. Voltage - A root-mean-square potential of 1.0 ±0.2 volts, when no polarizing voltage is applied.

NOTE: Following a dielectric withstanding voltage or insulation resistance test, capacitance measurement may be delayed for a period up to 24 hours.

4.7.4 Dissipation factor (see 3.8). Unless otherwise specified (see 3.1), the dissipation factor shall be measured with a capacitance bridge or other suitable method at the frequency and voltage specified in 4.7.3a and b. The inherent accuracy of the measurement shall be ±2 percent of the reading plus 0.1 percent dissipation factor (absolute) unless otherwise specified. Suitable measurement techniques shall be used to minimize errors due to the connections between the measuring apparatus and the capacitor.

4.7.5 Dielectric withstanding voltage (see 3.9).

4.7.5.1 Dielectric. Capacitors shall be tested in accordance with method 301 of MIL-STD-202. The following details shall apply:

a. Magnitude and nature of test voltage - Unless otherwise specified (see 3.1), 250 percent of the dc rated voltage.

b. Duration of application of test voltage - 5 ±1 seconds. The test voltage shall be raised from 0 to the specified value within 1 second, maximum.

c. Points of application of test voltage - Unless otherwise specified (see 3.1), between the capacitor-element terminals.

d. Limiting value of surge current - Shall be limited between 30 and 50 milliamperes.

e. Examination after test - Capacitors shall be examined for evidence of damage and breakdown.

Source: https://assist.dla.mil -- Downloaded: 2016-11-16T17:58Z
Check the source to verify that this is the current version before use.

4.7.5.2 Body insulation. Capacitors shall be tested as specified in 4.7.5.1 with the following exception:

Points of application of test voltage - Unless otherwise specified (see 3.1), capacitors shall be wrapped with a conductive tape or foil so that the conductive tape or foil shall not be less than .0625 (1.59 mm) and more than .125 (3.18 mm) away from the lead wires. A dc potential as specified (see 3.1) shall be applied between the two leads connected together and the tape or foil for a period of 5 ±1 seconds. The test circuit shall be so arranged that the surge current does not exceed 50 mA.

4.7.6 Barometric pressure (see 3.10). Capacitors shall be tested in accordance with method 105 of MIL-STD-202. The following details and exceptions shall apply:

a. Method of mounting - Securely fastened by their normal mounting means.

b. Test condition D - (100,000 feet) (.315 inch of mercury).

c. Test during subjection to reduced pressure - Unless otherwise specified (see 3.1), a dc potential equal to 100 percent of the dc rated voltage applied for a period of 5 ±1 seconds.

d. Points of application - Unless otherwise specified (see 3.1), the test voltage shall be applied between the capacitor-element terminals.

e. Surge current - Shall not exceed 50 mA.

f. Examination during and after test - Capacitors shall be visually monitored for evidence of flashover or damage.

4.7.7 Insulation resistance (see 3.11). Capacitors shall be tested in accordance with method 302 of MIL-STD-202. The following details shall apply:

a. Test potential - Unless otherwise specified (see 3.1), rated voltage.

b. Special conditions - If a failure occurs at a relative humidity above 50 percent, the insulation resistance may be measured again at any relative humidity less than 50 percent.

c. Points of measurement - Unless otherwise specified (see 3.1), between the mutually insulated points.

4.7.8 Seal (see 3.12) (when specified, see 3.1). Capacitors shall be tested in accordance with method 112 of MIL-STD-202 and 4.7.8.1 or 4.7.8.2. The fine leak test shall precede the gross leak test.

4.7.8.1 Gross leak test. Test condition D, method 112 of MIL-STD-202 shall apply. A dye penetrant test (with comparable leak rate sensitivity) may be substituted for the bubble test.

4.7.8.2 Fine leak test. Test condition C, procedure III, method 112 of MIL-STD-202 shall apply. A nominal leakage-rate sensitivity of 10^{-8} atm cm^3/s shall apply.

4.7.9 Solderability (see 3.13). Capacitors shall be tested in accordance with method 208 of MIL-STD-202. The following detail shall apply:

Number of terminations to be tested - 2 (unless otherwise specified, see 3.1).

Source: https://assist.dla.mil -- Downloaded: 2016-11-16T17:58Z
Check the source to verify that this is the current version before use.

4.7.10 Voltage-temperature limits (see.3.14).

4.7.10.1 For qualification inspection. The temperature of each capacitor shall be varied as specified in table VI. Capacitance measurements shall be made at the frequency and voltage specified in 4.7.3a and b. The dc rated voltage specified in table VI shall be maintained on the capacitor during steps E to G inclusive. Capacitance measurements shall be made at each step specified in table VI and at a sufficient number of intermediate temperatures, between steps E and G to establish a true characteristic curve. Capacitors shall be kept at each temperature until temperature equilibrium is attained.

4.7.10.2 For quality conformance inspection. Capacitance measurements shall be made as specified in 4.7.10.1 except that the measurements shall be made only for steps C, D, E, and G of table VI.

TABLE VI. Voltage-temperature limit cycle.

Step	Voltage, dc	Temperature
		°C
A	None	+25 ±2
B	None	-55 ±2
C 1/	None	+25 ±2
D	None	Applicable high-test temperature ±2
E	Rated	Applicable high-test 2/ temperature ±2
F	Rated	+25 ±2
G	Rated	-55 ±2

1/ Reference point.
2/ For applicable high-test temperature and voltage rating of style CKR13 (see 3.1).

4.7.11 Vibration, high frequency (see 3.15). Capacitors shall be tested in accordance with method 204 of MIL-STD-202. The following details and exception shall apply:

a. Mounting - Capacitors shall be rigidly mounted on a mounting fixture by the body. For styles other than feed-through, leads shall be secured to rigidly supported terminals, so spaced that the length of each lead from the capacitor is approximately .375 (22.22 mm) when measured from the edge of the supporting terminal. Leads shall be within 15° of being parallel; each lead in disk types shall be in the plane of the flat surface from which it extends. When securing leads, care shall be taken to avoid pinching the leads. The mounting fixture shall be so constructed as to preclude any resonances within the test range. An examination of the mounting fixture shall be made on a vibrator. If any resonant frequencies are observed, adequate steps must be taken to damp the structure.

b. Electrical load conditions - During the test, a dc potential equal to 125 percent of the dc rated voltage (see 3.1) shall be applied between the terminals of the capacitor element under test.

Source: https://assist.dla.mil -- Downloaded: 2016-11-16T17:58Z
Check the source to verify that this is the current version before use.

c. Test condition D - (20 G's).

d. Duration and direction of motion - Equal amounts of time in each of three mutually perpendicular planes (total of 8 hours).

e. Measurements during vibration - During the last cycle in each direction, an electrical measurement shall be made to determine intermittent contacts of 0.5 ms or greater duration or open - or short-circuiting.

f. Examination after vibration - Capacitors shall be visually examined for evidence of mechanical damage.

4.7.12 Immersion (see 3.16). Capacitors shall be tested in accordance with method 104 of MIL-STD-202. The following details shall apply:

a. Test condition B.

b. Examinations and measurements after final cycle - Capacitors shall be visually examined for evidence of mechanical damage and obliteration of marking; dielectric withstanding voltage, insulation resistance, capacitance, and dissipation factor shall then be measured as specified in 4.7.5, 4.7.7, 4.7.3, and 4.7.4, respectivley.

4.7.13 Salt spray (corrosion) (applicable as specified (see 3.17). Capacitors shall be tested in accordance with method 101 of MIL-STD-202. The following details and exception shall apply:

a. Test condition B.

b. Measurements after exposure - Not applicable.

c. Examinations and measurement after test - Capacitors shall be visually examined for evidence of harmful and extensive corrosion and obliteration of marking.

4.7.14 Shock, specified pulse (see 3.18). Capacitors shall be tested in accordance with method 213 of MIL-STD-202. The following details shall apply:

a. Mounting - Capacitor shall be rigidly mounted by the body.

b. Test condition I - (100 G's).

c. Measurements during shock - During the last shock in each direction, an electrical measurement shall be made to determine intermittent contacts of 0.5 ms or greater duration or open- or short-circuiting.

d. Examination after shock - Capacitors shall be visually examined for evidence of breakdown, arcing, and mechanical damage.

4.7.15 Terminal strength, when applicable (see 3.19). Capacitors shall be tested in accordance with method 211 of MIL-STD-202. The following details and exceptions shall apply:

a. Test condition A, applicable to all styles except CKR72. Applied force - 5 pounds, unless otherwise specified (see 3.1).

b. Test condition C, applicable to radial-lead units only. Applied force - 1.0 +.1, -0 pound.

Source: https://assist.dla.mil -- Downloaded: 2016-11-16T17:58Z
Check the source to verify that this is the current version before use.

c. Test condition D, applicable to axial-lead units only.

d. Examination after test - Capacitors shall be visually examined for evidence of loosening or rupturing of the terminals.

4.7.16 Moisture resistance (see 3.20). Capacitors shall be tested in accordance with method 106 of MIL-STD-202. The following detail and exceptions shall apply:

a. Initial measurements - Not applicable.

b. Number of cycles - 20 continuous cycles.

c. Step 7b - Not applicable.

d. Loading - Unless otherwise specified (see 3.1), during the first 10 cycles only, a dc potential of 100 volts or rated voltage, whichever is less, shall be applied across the capacitor terminals. Once each day, a check shall be performed to determine whether a capacitor has shorted.

e. Examinations and final measurement - Upon completion of step 6 of the final cycle, capacitors shall be conditioned at 25°C ±5°C and a relative humidity of 50 ±5 percent for a period of 18 hours minimum, 24 hours maximum, and shall be visually examined for evidence of mechanical damage and obliteration of marking; capacitance, dielectric withstanding voltage, and insulation resistance shall then be measured as specified in 4.7.3, 4.7.5, 4.7.5.1, 4.7.5.2, and 4.7.7, respectively.

4.7.17 Fungus (when applicable, see 3.21). Capacitors shall be tested in accordance with method 508 of MIL-STD-810.

4.7.18 Resistance to soldering heat (see 3.22). Capacitors shall be tested in accordance with method 210 of MIL-STD-202. The following details and exceptions shall apply:

a. Surface oxides and dross shall be skimmed off the solder pot immediately before lead immersion to ensure full and complete heat flow through the leads.

b. Depth of immersion in the molten solder - To a minimum of 0.050 -0, +.020 inch from the capacitor body (the example shown on figure 3 is applicable to all terminal type).

c. Test condition B, except that the immersion duration shall be 20 ±1 seconds.

d. Cooling time prior to measurement after test - 10 ±1 minutes, unless otherwise specified (see 3.1).

e. Measurements after test - Capacitance, dissipation factor, and insulation resistance at 25°C shall be measured as specified in 4.7.3, 4.7.4, and 4.7.7, respectively.

f. Internal examination after test - Not required.

Source: https://assist.dla.mil -- Downloaded: 2016-11-16T17:58Z
Check the source to verify that this is the current version before use.

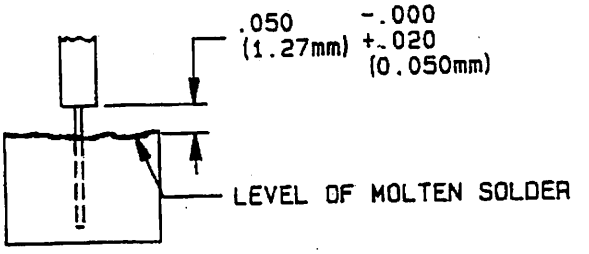

FIGURE 3. Example of axial wire-lead depth of immersion in molten solder.

4.7.19 Resistance to solvents (see 3.23). Capacitors shall be tested in accordance with method 215 of MIL-STD-202. The following details shall apply:

a. The marked portion of the capacitor body shall be brushed.

b. The number of sample units to be examined shall be as specified in table II.

c. Capacitors shall be visually examined for evidence of mechanical damage and obliteration of marking.

4.7.20 Life (at elevated ambient temperature) (see 3.24).

4.7.20.1 For qualification inspection. Capacitors shall be tested in accordance with method 108 of MIL-STD-202. The following details and exceptions shall apply:

a. Distance of temperature measurements from specimens, in inches - Not applicable.

b. Operating conditions - Capacitors shall be subjected to 85°C at a minimum of 200 percent of the rated dc voltage.

c. Operating conditions - Capacitors tested under rated conditions shall be subjected to the dc rated voltage, minimum. (See circuit in 4.7.2.2). Capacitors tested under accelerated conditions shall be subjected to twice the dc rated voltage. The test voltage shall be raised from 0 to the specified value within 1 second, maximum. The surge current shall be not less than 30, nor more than 200 mA. Test circuitry shall be the same as that required for voltage conditioning (see 4.7.2.2).

d. Test condition D - (1,000 hours).

Source: https://assist.dla.mil -- Downloaded: 2016-11-16T17:58Z
Check the source to verify that this is the current version before use.

e. Measurements during and after exposure - At the conclusion of this test and while the capacitors are at the applicable high-test temperature, the insulation resistance shall be measured as specified in 4.7.7. At the option of the manufacturer, the units may be immediately transferred (period of transfer not to exceed 15 minutes) to another chamber maintained at the same temperature for the purpose of measuring insulation resistance. The insulation resistance measurement shall be made only after the units have stabilized at the test temperature. The capacitors shall then be returned to the inspection conditions specified in 4.3 and shall be visually examined for evidence of mechanical damage and obliteration of marking; insulation resistance, capacitance, and dissipation factor, shall be measured as specified in 4.7.7, 4.7.3, and 4.7.4, respectively.

4.7.20.1.1 Life (accelerated condition at 85°C) (style CKR13 only). 1/ Capacitors shall be tested as specified in 4.7.20.1 with the following exceptions:

a. Test temperature and tolerance - 85° +4°, -0°C.

b. Operating conditions - Capacitors shall be subjected to 200 percent of the 85°C dc rated voltage.

c. Duration of test - Capacitors shall be tested for a total of 4,000 hours. The failures allowed in group VII of table II and subgroup 6 of table IV apply to the first 1,000 hours of this test. The additional unit hours accumulated under this test shall be used for data information purposes only and shall not be used for failure rate computations.

d. Measurements during and after exposure - Measurements, as specified in 4.7.20.1, shall be taken at: 0; 250 +48, -0; 1,000 +48, -0; 2,000 +72, -0; and 4,000 +72, -0 hours.

4.7.20.2 For quality conformance inspection.

4.7.20.2.1 For FR levels 1.0, 0.1, 0.01 and 0.001 percent/1,000 hours. Capacitors shall be tested as specified in 4.7.20.1, except that duration of test will be 4,000 hours (accelerated condition only).

4.7.20.2.2 Life (accelerated condition at 85°C) (style CKR13 only). Capacitors shall be tested as specified in 4.7.20.1.1.

4.7.20.3 Extended life test.

4.7.20.3.1 For qualification inspection. Sample units which have been subjected to 1,000 hours of life under rated conditions shall be continued on test for a total of 32,000 hours. Sample units which have been subjected to 1,000 hours of life test under accelerated conditions shall be continued on test for a total of 4,000 hours. Measurements as specified in 4.7.20.1 shall be taken every 1,000 +48, -0 hours for the first 10,000 hours and then after every 5,000 +96, -0 hours until a total of 32,000 +96, -1 hours have passed.

4.7.21 Low temperature storage (see 3.25). Capacitors shall be subjected to exposure at -65° +0°, -3°C for a period of 8 hours, minimum.

1/ Accelerated life test at 85°C for style CKR13 is in addition to the CKR13 rated and accelerated life test at 125°C as specified in 4.7.20.1 and shall be performed on a separate set of sample units as specified in tables II and V.

Source: https://assist.dla.mil -- Downloaded: 2016-11-16T17:58Z
Check the source to verify that this is the current version before use.

4.7.22 Radiographic inspection (for qualification and FR level "S", when specified, see 3.1) (see 3.26). Capacitors shall be tested in accordance with method 209 of MIL-STD-202. The following details and exception shall apply:

a. Radiographic quality - The radiograph shall render a clear sharp image of the penetrameter.

b. Image-quality indicator - A radiograph of the penetrameter shall be included on each radiograph film. The penetrameter may be made from a sample capacitor, of the same style as the capacitor being radiographed, with an AWG number 48 copper wire mounted across the capacitor body or it may be fabricated in accordance with, or be equivalent to, the example on figure 4.

c. Positions of specimen - Unless otherwise specified (see 6.2), one view shall be taken of each capacitor perpendicular to the plane of the lead surface (see figure 5).

d. Evaluation of images:

1. Special kind of viewing equipment - Magnifying glass.

2. Magnification - 10X.

3. Defects to be sought in specimen - As specified in 3.26.

e. Additional required examination:

1. There shall be a minimum of 80 percent solder fillet between capacitor element and each lead.

2. There shall be a minimum of .005 (0.13 mm) encapsulating material encasing the capacitor element (see figure 6).

3. There shall be a minimum of .005 (0.13 mm) between edge of case and tip of solder spike.

4. Extraneous particles or void in encapsulating material shall not be greater than .005 (0.13 mm) in any dimension.

NOTE: Test results (covering the number of capacitors tested with number and and kind of failures notes) and radiograph shall be retained for a minimum period of 2 years. Upon request of user, this data shall be supplied with each shipment.

5. PACKAGING

5.1 Packaging requirements. The requirements for packaging shall be in accordance with MIL-C-39028.

6. NOTES

(This section contains information of a general or explanatory nature that may be helpful, but not mandatory.)

6.1 Intended use. These capacitors are primarily designed for use where a small physical size with comparatively large electrical capacitance and high insulation resistance is required. General purpose ceramic capacitors are not intended for frequency-determining or precision circuits but are suitable for use as by-pass, filter, and non-critical coupling elements in high-frequency circuits. All of these applications are of the type where dissipation factor is not critical and moderate changes due to temperature, voltage, and frequency variations do not affect the proper functioning of the circuit.

Source: https://assist.dla.mil -- Downloaded: 2016-11-16T17:58Z
Check the source to verify that this is the current version before use.

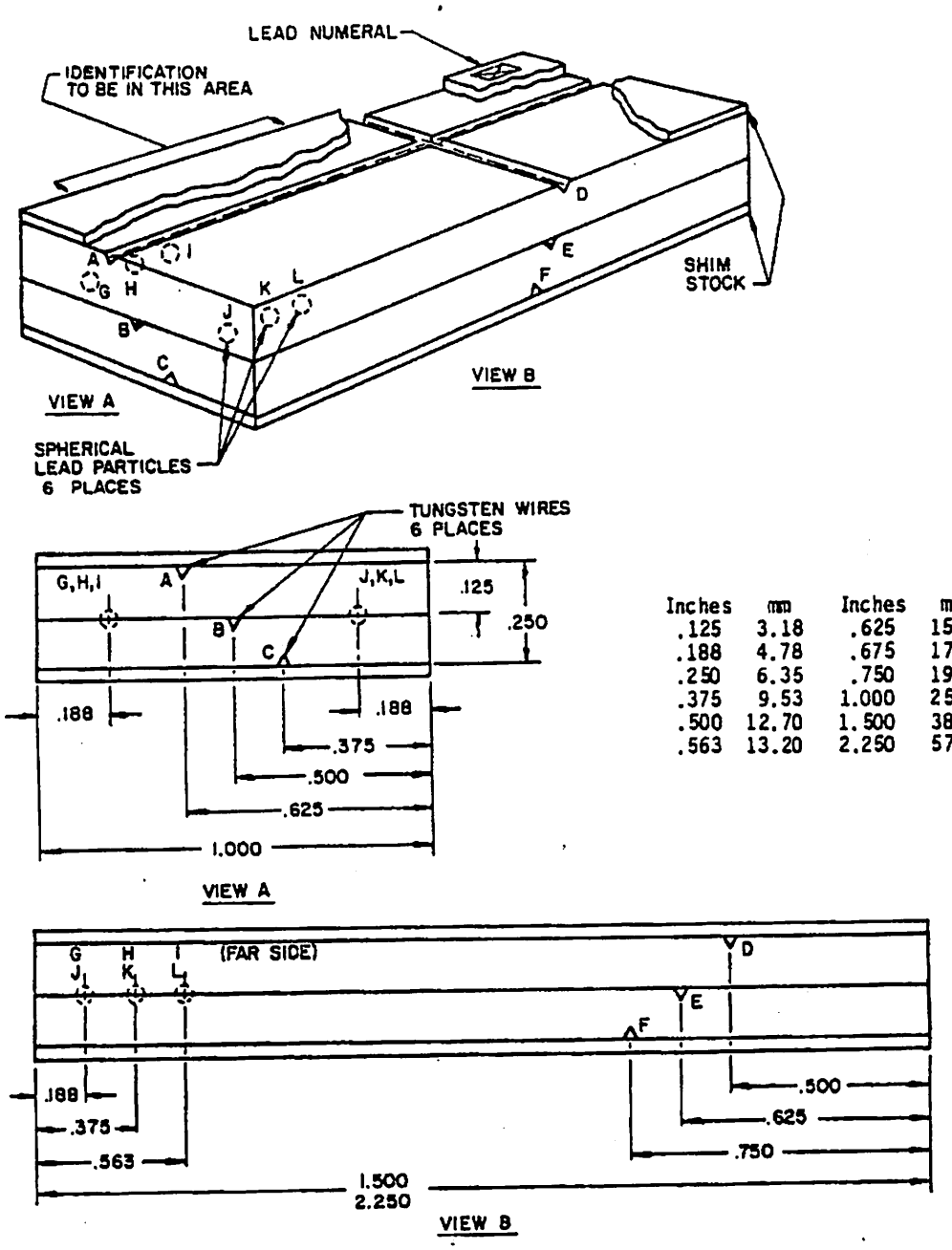

Inches	mm	Inches	mm
.125	3.18	.625	15.88
.188	4.78	.675	17.15
.250	6.35	.750	19.05
.375	9.53	1.000	25.40
.500	12.70	1.500	38.10
.563	13.20	2.250	57.15

FIGURE 4. Image quality indicator (optional).

Source: https://assist.dla.mil -- Downloaded: 2016-11-16T17:58Z
Check the source to verify that this is the current version before use.

Table of image quality indicators

Tungsten wire diameters						Lead particle diameters						Steel shim stock
A	B	C	D	E	F	G	H	I	J	K	L	
.002 (0.05)	.001 (0.03)	.0005 0.01)	.0005 (0.01)	.001 (0.03)	.002 (0.05)	.015 (0.38)	.010 (0.25)	.008 (0.20)	.006 (0.15)	.004 (0.10)	.002 (0.05)	None
"	"	"	"	"	"	"	"	"	"	"	"	.002 (0.05)
"	"	"	"	"	"	"	"	"	"	"	"	.005 (0.13)
"	"	"	"	"	"	"	"	"	"	"	"	.007 (0.18)
.003 (0.08)	.002 (0.05)	.001 (0.03)	.001 (0.03)	.002 (0.05)	.003 (0.08)	"	"	"	"	"	"	.010 (0.25)
.003 (0.08)	.002 (0.05)	.001 (0.03)	.001 (0.03)	.002 (0.05)	.003 (0.08)	"	"	"	"	"	"	.015 (0.38)
.005 (0.13)	.003 (0.08)	.002 (0.05)	.002 (0.05)	.003 (0.08)	.005 (0.13)	"	"	"	"	"	"	025 (0.64)
.005 (0.13)	.003 (0.08)	.002 (0.05)	.002 (0.05)	.003 (0.08)	.005 (0.13)	"	"	"	"	"	"	.035 (0.89)

NOTES:
1. Dimensions are in inches.
2. Metric equivalents are give for general information only.
3. Millimeters are in parentheses.
4. Wires to be tungsten, shim stock to be carbon steel, particles to be lead. Center section to be .125 (3.18 mm) layers of clear acrylic plastic bonded with clear plastic cement of low X-ray density. Fasteners may be used within .250 (6.35 mm) from each corner, but shall not interfere with end use of the penetrameter. Bottom surface shall be flush.
5. All dimensions shown are ±.005" (0.13 mm), except wires, and shim stock, which shall be within standard mill tolerances and lead particles which shall be ±.0002 (0.005 mm). Groove details are not critical except that wire must be embedded flush or below surface of plastic and centered at location shown. Particle-hole sizes are not critical, but should not exceed .031 (0.79 mm) in diameter and depth, and must be centered as shown ±.005 (0.13 mm).
6. Additional layers of shim stock may be used as necessary.
7. Identification marking shall be permanent and legible. Location and size of characters are not critical but shall not interfere with or obscure the radiographic image details.

FIGURE 4. Image quality indicator (optional) - Continued.

Source: https://assist.dla.mil -- Downloaded: 2016-11-16T17:58Z
Check the source to verify that this is the current version before use.

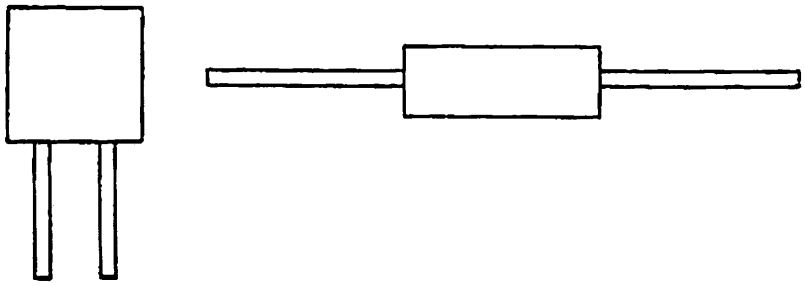

FIGURE 5. Viewing planes for radiographic inspection.

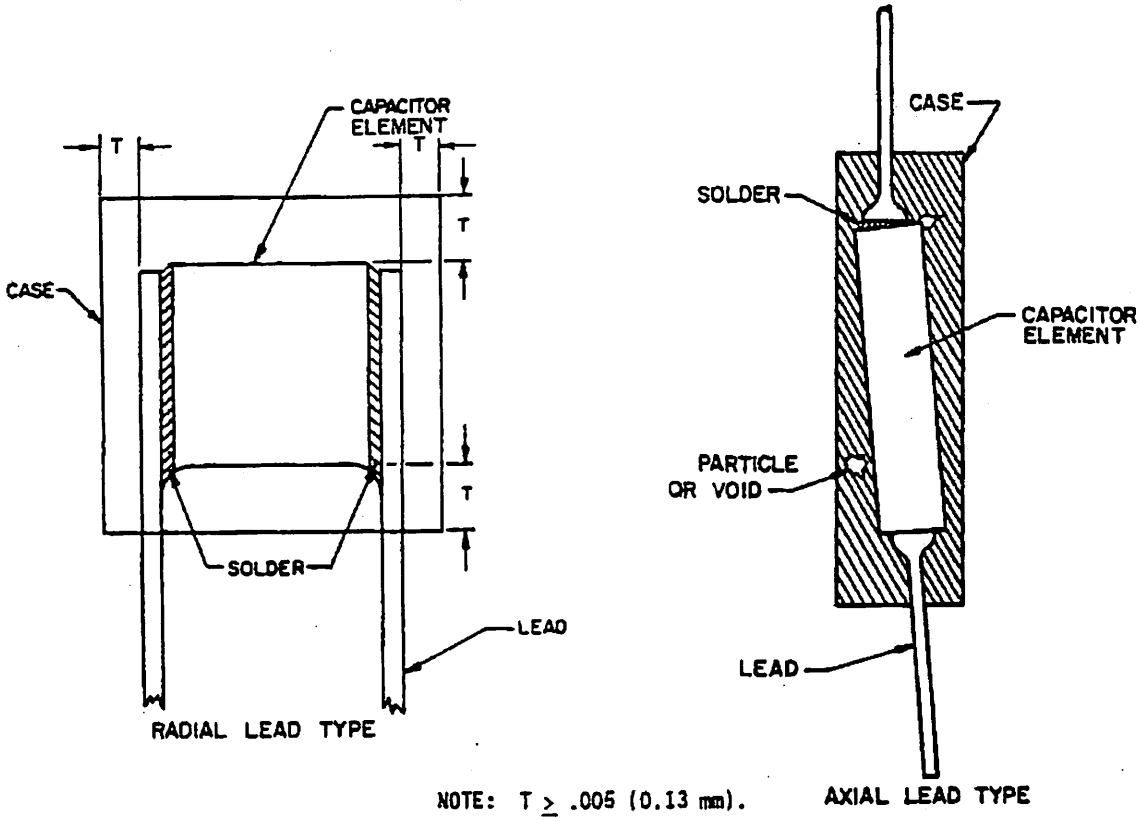

NOTE: T ≥ .005 (0.13 mm).

FIGURE 6. Radiographic inspection criteria.

Source: https://assist.dla.mil -- Downloaded: 2016-11-16T17:58Z
Check the source to verify that this is the current version before use.

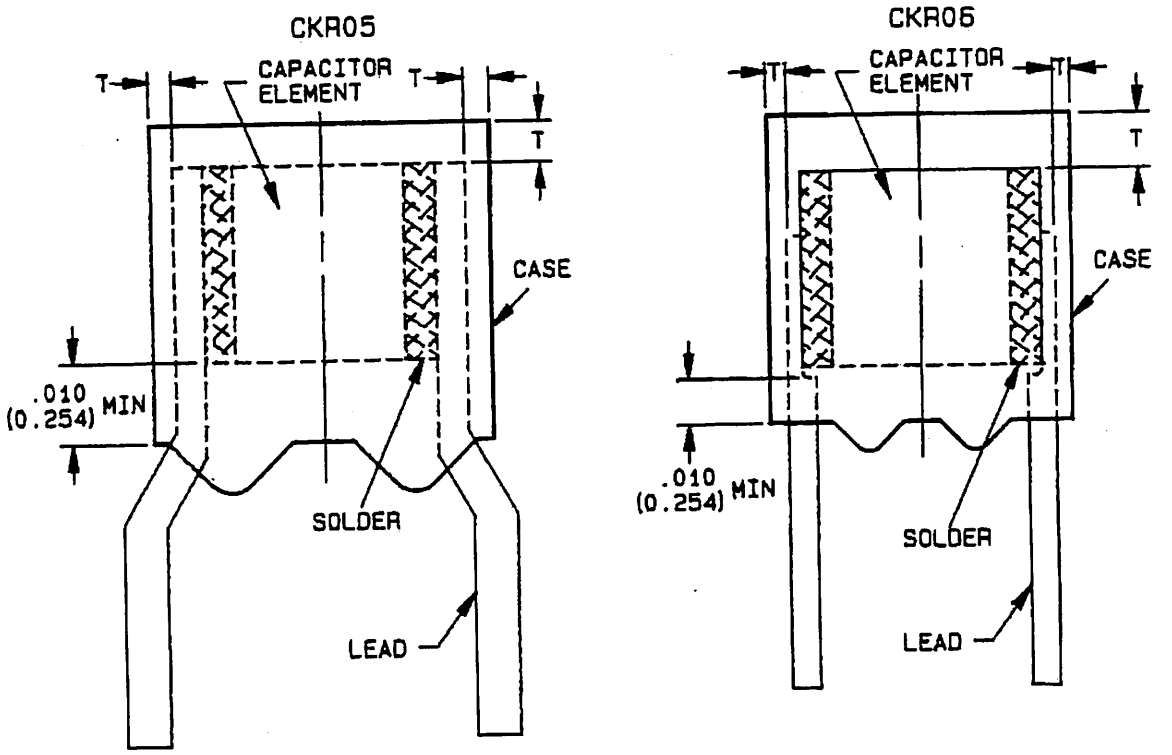

NOTE: T ≥ .005 (0.13 mm).

RADIAL LEAD TYPE WITH STANDOFFS

FIGURE 6. Radiographic inspection criteria - Continued.

Source: https://assist.dla.mil -- Downloaded: 2016-11-16T17:58Z
Check the source to verify that this is the current version before use.

6.1.1 Case insulation. It is not intended that the case insulation be subjected to sustained voltage in excess of 150 percent of the dc rated voltage of the capacitor. Supplementary insulation should be provided where the case may come in contact with higher voltage.

6.2 Acquisition requirements. Acquisition requirements should specify the following:

a. Title, number, and date of this specification.

b. Title, number and date of the applicable specification sheet, and the complete part number (see 3.1).

c. Required levels of preservation and packaging, packing, and special marking (see section 5 and 3.27).

d. Required number of views and planes if other than that specified (see 4.7.22c).

e. Lead length, if different from that specified (applicable to military specification sheets MIL-C-39014/1, MIL-C-39014/2, MIL-C-39014/5, MIL-C-39014/13, MIL-C-39014/23, MIL-C-39014/24 and MIL-C-39014/25). Lead lengths may be a minimum of .625 (15.88 mm) long for use in tape and reel automatic insertion equipment, when specified.

f. Lead finish (see 3.5.1).

g. Retinning (hot solder dip), if required.

6.3 Qualification. With respect to products requiring qualification, awards will be made only for products which are at the time set for opening of bids, qualified for inclusion in the applicable qualified products list, whether or not such products have actually been so listed by that date. The attention of the contractors is called to this requirement, and manufacturers are urged to arrange to have the products that they propose to offer to the Federal Government tested for qualification in order that they may be eligible to be awarded contracts or orders for the products covered by this specification. The activity responsible for the qualified products list is the U. S. Army Laboratory Command (LABCOM), Attn: SLCET-R-S, Fort Monmouth, NJ 07703-5302; however, information pertaining to qualification of products may be obtained from the Defense Electronics Supply Center (DESC-E), Dayton, Ohio 45444. Application for qualification tests shall be made in accordance with SD-6, "Provisions Governing Qualification", which may be obtained by applying to the Standardization Documents Order Desk, Building 4D, 700 Robbins Avenue, Philadelphia, PA 19111-5094.

6.4 Standard capacitor types. Equipment designers should refer to MIL-STD-198, Capacitor, Selection and Use Of, for standard capacitor types and selected values chosen from this specification. MIL-STD-198 provides a selection of standard capacitors for new equipment design.

6.5 Marking of non-established reliability (non-ER) parts. An established reliability (ER) part manufactured in accordance with this specification may be marked and furnished as the non-ER version in accordance with MIL-C-11015, if produced on the same assembly line or lines, and provided it is subjected to and meets all the inspection requirements of the ER part.

Source: https://assist.dla.mil -- Downloaded: 2016-11-16T17:58Z
Check the source to verify that this is the current version before use.

6.6 Shipments to Government activities. The packaging requirements of this specification are primarily intended for the preparation of capacitors for shipment to Government activities.

6.6.1 Shipments of ER capacitors to Government contractors and manufacturers' distributors. MIL-STD-1188, "Commercial Packaging of Supplies and Equipment", should be specified for the packaging of ER capacitors shipped to Government contractors and subcontractors and to category A and B distributors as defined in MIL-STD-790. The marking of the unit containers should not be required provided the intermediate containers are marked.

6.7 International standardization agreements. Certain provisions (see 3.1) of this specification are the subject of international standardization agreement NATO-NEPR number 14. When amendment, revision, or cancellation of this specification is proposed, which will affect or violate the international agreement concerned, the preparing activity will take appropriate reconciliation action through international standardization channels including departmental standardization offices, if required.

6.8 Revision asterisks. Asterisks are not used in this revision to identify changes with respect to the previous issue due to extensiveness of the changes.

6.9 Key work listing.

Capacitor
Ceramic
Established reliability
Parts per million (PPM)
Statistical process control (SPC)

Source: https://assist.dla.mil -- Downloaded: 2016-11-16T17:58Z
Check the source to verify that this is the current version before use.

APPENDIX

PROCEDURE FOR QUALIFICATION INSPECTION

10. SCOPE

10.1 Scope. This appendix details the procedure for submission of samples, with related data, for qualification inspection of capacitors covered by this specification. The procedures for extending qualification of the required sample to other capacitors covered by this specification is also outlined herein. This appendix is a mandatory part of this specification. The information contained herein is intended for compliance.

20. APPLICABLE DOCUMENTS. This section is not applicable to this appendix.

30. SUBMISSION

30.1 Sample.

30.1.1 Single-style submission. A sample of the size required in table II, of the highest capacitance value in each voltage rating in each operating temperature range and voltage-temperature limit in each style for which qualification is sought shall be submitted.

30.2 Test data. When examinations and tests are to be performed at a Government laboratory, prior to submission, all sample units shall be subjected to all of the examinations and tests indicated as nondestructive in table II. Each submission shall be accompanied by the test data obtained from these examinations and test. The performance of the destructive tests by the contractor on a duplicate set of sample units is encouraged, although not required. All test data shall be submitted in duplicate.

30.3 Certification of material. When submitting samples for qualification, the contractor shall submit certification, in duplicate, that the materials used in his components are in accordance with the applicable specification requirements.

30.4 Description of items. The contractor shall submit a detailed description of the capacitors being submitted for inspection, including body, coating, electrode material, terminal leads, etc.

40. EXTENT OF QUALIFICATION

40.1 Single - style submission. Capacitance - range qualification will be restricted to values equal to and less than the capacitance value submitted. Capacitance - tolerance qualification will be restricted to tolerance equal to and wider than the tolerance submitted. DC rated voltage qualification will be restricted to that submitted. Operating temperature range and voltage temperature limit qualification will be restricted to that submitted.

40.1.1 Extension of qualification of established reliability. Qualification of ceramic capacitors with standoffs to similar ER and Non-ER capacitors will be extended to ceramic capacitors without standoffs, as indicated in the following table.

Source: https://assist.dla.mil -- Downloaded: 2016-11-16T17:58Z
Check the source to verify that this is the current version before use.

APPENDIX

Qualification to ER standoff	Will extend qualification to		
	ER without standoff	Non-ER without standoff	
			Specification sheet
CKR05 CKR06	CKR05 CKR06	CK05 CK06	MIL-C-11015/18 MIL-C-11015/19

CONCLUDING MATERIAL

Custodians:
Army - ER
Navy - EC
Air Force - 85

Review activities:
Army - AR, MI
Air Force - 99

User activities:
Army - AT, AV, ME
Navy - MC
Air Force - 19

Preparing activity:
Army - ER

Agent:
DLA - ES

(Project 5910-1631)

Source: https://assist.dla.mil -- Downloaded: 2016-11-16T17:58Z
Check the source to verify that this is the current version before use.