MILITARY SPECIFICATION SHEET

CABLE, FIBER OPTIC, FOUR FIBERS, ENHANCED PERFORMANCE, CABLE CONFIGURATION TYPE 2 (OFCC), APPLICATION B (SHIPBOARD), CABLE CLASS SM AND MM, (METRIC)

This specification is approved for use by all Departments and Agencies of the Department of Defense.

The requirements for acquiring the product described herein shall consist of this specification sheet and the issue of the following specification listed in that issue of the Department of Defense Index of Specifications and Standards (DODISS) specified in the solicitation: MIL-C-85045.

CLASSIFICATION:

Fiber optic cable configuration type: 2 (OFCC).

Fiber cable class: SM (Dispersion-unshifted, glass core and glass cladding, single-mode)
MM (Graded-index, glass core and glass cladding multimode)

DESIGN AND CONSTRUCTION:

Fiber:

Type MM fibers shall be in accordance with MIL-F-49291/6.

Type SM fibers shall be in accordance with MIL-F-49291/7.

Buffer diameter: 900 ± 50 µm.

OFCC:

Dimensions and configuration: See figure 1.

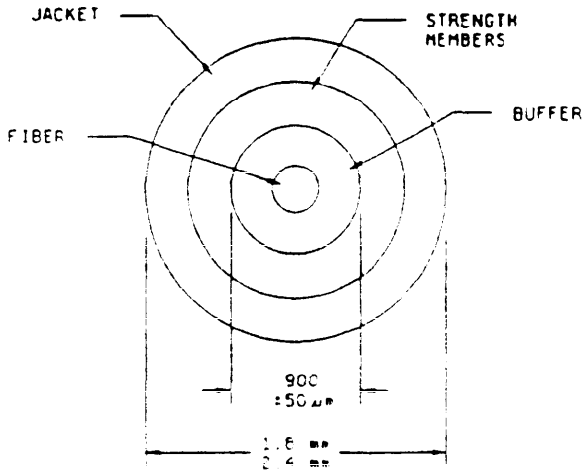

NOTE:
1. Dimensions are in millimeters.

FIGURE 1. Optical fiber cable component.

DISTRIBUTION STATEMENT A. Approved for public release; distribution is unlimited.

Source: https://assist.dla.mil -- Downloaded: 2016-12-30T10:10Z
Check the source to verify that this is the current version before use.

Mass per unit length: ≤ 15 kg/km.

Tensile loading: ≥ 270 N.

Dynamic bend tensile load: 90 N minimum.

Jacket material: The OFCC jacket shall be composed of a low halogen, low smoke, low toxicity polymer material.

FINISHED CABLE:

Dimensions and configuration: See figure 2. Four OFCC units shall be helically laid over the central member with a maximum lay of 25 cm. The minimum outer jacket thickness shall be not less than 1.0 mm.

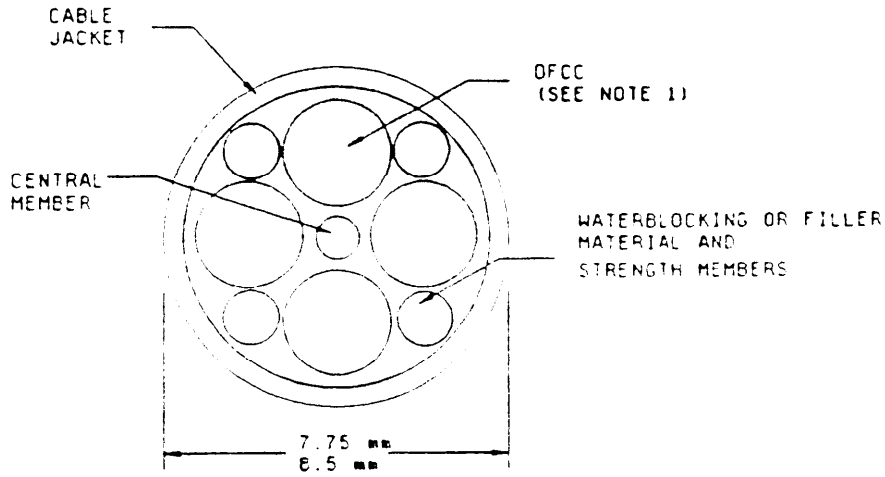

NOTES:
1. OFCC - Optical fiber cable component.
2. Dimensions are in millimeters.

FIGURE 2. Four OFCC fiber optic cable.

Number of fibers: 4 (one per OFCC).

Concentricity: ≥ 0.8.

Mass per unit length: ≤ 100.0 kg/km.

Jacket material: The OFCC jacket shall be composed of a low halogen, low smoke, low toxicity polymer material.

Short term minimum bend diameter: Eight times the cable outer diameter. (The short term minimum bend diameter is to be used in all environmental and mechanical tests which specify a cable minimum bend diameter.)

Long term minimum bend diameter: Sixteen times the cable outer diameter.

Minimum continuous length: The minimum continuous length of all cables shall be not less than 0.5 km. If lengths less than 0.5 km are specified in the purchase order, the delivered cable shall be accompanied by certified test data demonstrating that the Quality Conformance Inspection was performed on a test specimen not less than 0.5 km in length.

Change in optical transmittance: Measurements to be made at 1300 ± 20 nm.

Maximum attenuation rate: 4.5 dB/km at 850 ± 20 nm, 2.0 dB/km at 1300 ± 20 nm for type MM fiber. 1.0 dB/km at 1310 ± 20 nm and 1550 ± 20 nm for type SM fiber. For cables with radiation cross-linked jackets, the change in attenuation rate measurement may be made up to 30 days after cross-linking of the cable jacket.

Source: https://assist.dla.mil -- Downloaded: 2016-12-30T10:10Z
Check the source to verify that this is the current version before use.

Bandwidth: Fiber with a minimum bandwidth of 500 MHz/km at 1300 nm shall be used (multimode cables only). Bandwidth is not specified at 850 nm.

Crosstalk: Applicable.

Tensile loading and elongation: Applicable, tensile loading ≥ 1875 N.

Operating tensile loading: Applicable.

Crush: Applicable.

ENVIRONMENTAL:

Temperature range:

Operating: -28°C to 65°C.
Nonoperating: -40°C to 70°C.
Storage: -40°C to 70°C.

Fluid immersion: Applicable, the following fluids and condition apply (see table I):

TABLE I. Fluid immersion fluids and conditions.

Fluids	Specification	Test temperature (°C)	Time (hours)
Fuel oil	MIL-F-16884	98-100	24
Turbine fuel (JP-5)	MIL-T-5624	48-50	24
Turbine fuel (JP-8)	MIL-T-83133	48-50	24
Isopropyl alcohol	TT-I-735	20-25	24
Hydraulic fluids	MIL-H-5606 MIL-H-17672	48-50	24
Lubricating oils	MIL-L-17331 MIL-L-23699	98-100	24
Coolant	1/	20-25	24
Seawater	ASTM-D-1141	20-25	24

1/ Monsanto Coolanol 25 or equivalent.

Low temperature flexibility: Applicable, except the exposure temperature shall be -40°C and the preconditioning time shall be 4 hours.

Cyclic flexing: 500 cycles at 25°C ± 2°C and 100 cycles at -28°C ± 2°C. Change in optical transmittance measurements are to be made every 100 cycles for the 500 cycle exposure and every 25 cycles for the 100 cycle exposure.

Cable twist bending: 500 cycles at 25°C ± 2°C and 100 cycles at -28°C ± 2°C. Change in optical transmittance measurements are to be made every 100 cycles for the 500 cycle exposure and every 25 cycles for the 100 cycle exposure.

Radial compression: Applicable.

Impact: 50 cycles at 25°C ± 2°C and 20 cycles at -40°C ± 2°C. Upon final visual examination at all tested temperatures, there shall be no jacket damage such as splitting or cracking.

Hosing: Both low pressure and hydrostatic pressure are applicable.

Hydrostatic: 2.1 MPa for M85045/18-01N and M85045/18-02N.
7.7 MPa for M85045/18-01P and M85045/18-02P.

Dripping: Applicable.

Source: https://assist.dla.mil -- Downloaded: 2016-12-30T10:10Z
Check the source to verify that this is the current version before use.

Temperature cycling: Change in optical transmittance measurements may be made periodically. At a minimum, three optical transmittance measurements shall be made over a period of 1 hour at the end of each temperature plateau.

Humidity: Change in optical transmittance measurements may be made periodically. At a minimum, three optical transmittance measurements shall be made at the end of each temperature plateau.

Storage temperature: Applicable.

Weathering: Applicable.

Flame extinguishing: Applicable.

Halogen content: < 0.2 percent.

Smoke generation and flame propagation: Applicable, except the pass/fail criteria shall be as follows. The peak optical density and the average optical density of smoke produced shall be not greater than 0.5 and 0.15 respectively. In addition, the flame spread-time product at the 10 minute point shall be not greater than 27.5 meters-minutes when calculated in accordance with ASTM-E-84.

Shock: Applicable.

Cable life: Applicable, except that the jacket material shall be tested at 175°C for 4 hours.

Cable scraping resistance: 750 cycles.

Cable to cable abrasion: 500 cycles.

Gas flame: Not applicable.

Paint susceptibility: Applicable.

Tempest: Applicable.

Cross-link verification: This test is applicable for cables with cross-linked jackets only. The test shall be conducted in accordance with ICEA standard T-28-562 and run at 200°C. The test shall be sequenced after the weathering test in both the qualification and group C quality conformance test sequences.

Part or Identifying Number (PIN) (see table II):

M85045/18-01N (Multimode).
M85045/18-01P (Multimode).
M85045/18-02N (Single mode).
M85045/18-02P (Single mode).

TABLE II. Supersession data.

PIN	Superseding
M85045/18-01P	M85045/18-01
M85045/18-01P	M85045/18-01T
M85045/18-01N	None
M85045/18-02P	M85045/18-02
M85045/18-02P	M85045/18-02T
M85045/18-02N	None

Qualification by similarity: Manufacturers who produce products for both MIL-C-85045/17 and this specification sheet and are qualified under MIL-C-85045/17 and pass the attenuation rate, cold bend, impact, low pressure, abrasion, smoke generation and flame propagation, flame extinguishing, and size inspection specified herein, are qualified under this specification sheet.

Source: https://assist.dla.mil -- Downloaded: 2016-12-30T10:10Z
Check the source to verify that this is the current version before use.

CONCLUDING MATERIAL

Custodians:
Army - CR
Navy - SH
NASA - NA

Review activities:
Army - AR, AV, MI
Navy - EC, YD
Air Force - 13, 17, 19, 80, 90, 99
DLA - ES

Preparing activity:
Navy - SH

Agent:
DLA - ES

(Project 6015-0029-06)

Source: https://assist.dla.mil -- Downloaded: 2016-12-30T10:10Z
Check the source to verify that this is the current version before use.