MILITARY SPECIFICATION

CONNECTORS, ELECTRICAL, PRINTED WIRING BOARD, GENERAL PURPOSE

GENERAL SPECIFICATION FOR

This specification approved for use by all Departments and Agencies of the Department of Defense.

1. SCOPE

1.1 Scope. This specification covers multicontact connectors for 1/16-, 3/32-, and 1/8-inch printed wiring boards, and for interconnections between printed wiring boards. The connectors are intended to provide a reliable connection between printed wiring and conventional wiring. The interconnector concept is intended to provide connection of printed wiring on one board to printed wiring on another board.

1.2 Classification. Connectors covered by this specification shall be classified by physical characteristics as indicated by type, style, class, size, and mounting provision (see 3.1).

1.2.1 Type. The type is identified as follows:

Types A and AD (card insertion connectors). Connector receptacles containing two contacts within each contact cavity, each of which engages a contact on an opposite side of a printed wiring board. In type A connectors, the two contacts in each cavity are electrically common. In type AD connectors, the two contacts in each cavity are electrically isolated from each other.

Type CR (receptacle). Composite connector having a solder type or removable crimp type female contact inserted into and mechanically retained in a receptacle housing, or composite contacts mounted on individual intermating printed wiring boards. Type CR contacts mate with type CS contacts.

Type CS (adapter). Composite connector having individual contacts attached to a printed wiring board or retained in an assembly attached to a printed wiring board. Type CS contacts mate with type CR contacts.

1.2.2 Style. The style of the connector shall be identified by a two-digit number which signifies the number of contact positions in the connector.

1.2.3 Class. The class is identified by a single-letter symbol which denotes the kind of termination in accordance with table I.

TABLE I. Class.

Symbol	Termination
a- - - - - -	Straight, eyelet, solder
b- - - - - -	Straight, plug-in, solder
c- - - - - -	Removable crimp or solder

Beneficial comments (recommendations, additions, deletions) and any pertinent data which may be of use in improving this document should be addressed to: Space and Naval Warfare Systems Command, Department of the Navy, Washington, DC 20363 by using the self-addressed Standardization Document Improvement Proposal (DD Form 1426) appearing at the end of this document or by letter.

FSC 5935

DISTRIBUTION STATEMENT A. Approved for public release, distribution is unlimited.

Source: https://assist.dla.mil -- Downloaded: 2016-11-15T22:12Z
Check the source to verify that this is the current version before use.

1.2.4 Size. The size is identified by a single-digit symbol which indicates the thickness of the applicable mating printed wiring board in accordance with table II

TABLE II. Size.

Symbol	Thickness of printed wiring board
2	1/16-inch (.054 - .070)
3	3/32-inch (.084 - .103)
4	1/8-inch (.115 - .135)

1.2.5 Mounting provision. The mounting provision is identified by a single-letter symbol in accordance with table III.

TABLE III. Mounting provision.

Symbol	Mounting provision
A - - - -	Clearance holes of specified diameter at both ends of the connector.
B - - - -	Tapped insert of specified thread at both ends of the connector.
C - - - -	Floating feed-through bushing of specified dimensions at both ends of the connector.
D - - - -	Contacts composite (individual) attached to printed wiring board by mechanical staking prior to soldering.

1.3 Military part number. The military part number shall consist of the letter "M", the basic number of the specification sheet, and an assigned dash number (see 3.1) as shown in the following:

M21097/1-001

Military designator — Specification sheet number — Dash number

2. APPLICABLE DOCUMENTS

2.1 Government documents.

2.1.1 Specifications and standards. The following specifications and standards form a part of this specification to the extent specified herein. Unless otherwise specified, the issues of these documents shall be those listed in the issue of the Department of Defense Index of Specifications and Standards and supplement thereto, cited in the solicitation.

SPECIFICATIONS

FEDERAL

O-T-634 - Trichloroethylene, Technical.
QQ-B-750 - Bronze, Phosphor; Bar, Plate, Rod, Sheet, Strip, Flat Wire, and Structural and Special Shaped Sections.
QQ-C-530 - Copper-Beryllium Alloy Bar, Rod, and Wire (Copper Alloy Numbers 172 and 173).
QQ-C-533 - Copper-Beryllium Alloy Strip (Copper Alloy Numbers 170 and 172).
QQ-N-290 - Nickel Plating (Electrodeposited).
QQ-P-35 - Passivation Treatments for Corrosion-Resisting Steel.
QQ-P-416 - Plating, Cadmium (Electrodeposited).
QQ-S-763 - Steel Bars, Wire, Shapes, and Forgings, Corrosion-Resisting.
QQ-S-766 - Steel Plate, Sheet, and Strip-Corrosion Resisting.

Source: https://assist.dla.mil -- Downloaded: 2016-11-15T22:12Z
Check the source to verify that this is the current version before use.

MILITARY

MIL-M-14	-	Molding Plastics and Molded Plastic Parts, Thermosetting.
MIL-F-14072	-	Finishes for Ground Electronic Equipment.
MIL-C-14550	-	Copper Plating, (Electrodeposited).
MIL-W-16878	-	Wire, Electrical, Insulated, General Specification For.
MIL-I-17214	-	Indicator, Permeability, Low-Mu (Go-no-go).
MIL-C-22520	-	Crimping Tools, Terminal Hand or Power Actuated, Wire Termination, and Tool Kits, General Specification For.
MIL-M-24519	-	Molding Plastics, Electrical, Thermoplastic.
MIL-G-45204	-	Gold Plating, Electrodeposited.
MIL-C-55330	-	Connectors, Electrical and Fiber Optic, Packaging of.
MIL-P-81728	-	Plating, Tin-Lead (Electrodeposited).

(See supplement 1 for list of associated specifications.)

STANDARDS

MILITARY

MIL-STD-105	-	Sampling Procedures and Tables for Inspection by Attributes.
MIL-STD-202	-	Test Methods For Electronic And Electrical Component Parts.
MIL-STD-275	-	Printed Wiring For Electronic Equipment.
MIL-STD-454	-	Standard General Requirements for Electronic Equipment.
MIL-STD-1285	-	Marking of Electrical and Electronic Parts.
MIL-STD-1344	-	Test Methods for Electrical Connectors.
MIL-STD-45662	-	Calibration Systems Requirements.

(Copies of specifications, standards, and publications required by contractors in connection with specific acquisition functions should be obtained from the contracting activity or as directed by the contracting activity.)

2.2 Other publications. The following documents form a part of this specification to the extent specified herein. Unless otherwise specified, the issues of the documents which are DOD adopted shall be those listed in the issue of the DODISS specified in the solicitation. Unless otherwise specified, the issues of documents not listed in the DODISS shall be the issue of the nongovernment documents which is current on the date of the solicitation.

AMERICAN SOCIETY FOR TESTING MATERIALS

ASTM-A-484	-	General Requirements for Stainless and Heat-Resisting Wrought Steel Products (Except Wire).
ASTM-A-582	-	Free-machining Stainless and Heat-Resisting Steel Bars, Hot-Rolled or Gold Finished.
ASTM-B-740	-	CDA 72900 Copper Nickel Alloy.

2.3 Order of precedence. In the event of a conflict between the text of this specification and the references cited herein (except for associated detail specifications, specification sheets or MS standards), the text of this specification shall take precedence. Nothing in this specification, however, shall supersede applicable laws and regulations unless a specific exemption has been obtained.

3. REQUIREMENTS

3.1 Specification sheets. The individual item requirements shall be as specified herein and in accordance with the applicable specification sheet. In the event of any conflict between the requirements of this specification and the specification sheet, the latter shall govern (see 6.2).

3.2 Qualification. Connectors furnished under this specification shall be products which are authorized by the qualifying activity for listing on the applicable qualified products list at the time set for opening of bids (see 4.5 and 6.3).

Source: https://assist.dla.mil -- Downloaded: 2016-11-15T22:12Z
Check the source to verify that this is the current version before use.

3.3 Materials. Materials shall be as specified herein. However, when a definite material is not specified, a material shall be used which will enable the connectors to meet the performance requirements of this specification and the applicable specification sheet. Acceptance or approval of a constituent material shall not be construed as an assurance of the acceptance of the finished product.

3.3.1 Nonmagnetic materials. All parts shall be made from materials which are classed as nonmagnetic.

3.3.2 Body material. Unless otherwise specified (see 3.1), body material shall be a diallylphthalate in accordance with MIL-M-14, type SDG-F or GDI-30F, or polyester thermoplastic conforming to type GPT-30F of MIL-M-24519.

3.3.3 Dissimilar metals. Where dissimilar metals are used in intimate contact with each other, protection against electrolysis and corrosion shall be provided. Dissimilar metals shall be as defined in MIL-STD-454, requirement 16.

3.3.4 Finish. All exposed metal parts, other than electrical contacts and stainless steel parts, shall be cadmium plated in accordance with type II, class 1 or 2 of QQ-P-416, except that a preliminary plating of other metal is permissible. Stainless steel parts shall be passivated in accordance with QQ-P-35.

3.3.4.1 Corrosion resistant steel. Where applicable, corrosion resistant steel shall be 300 series, low magnetic permeability in accordance with QQ-S-763, QQ-S-766, ASTM-A-484 and passivated in accordance with QQ-P-35 or to finish E300 as specified in MIL-F-14072 (see 3.1).

3.3.5 Contacts. Unless otherwise specified (see 3.1), contact material shall be phosphor bronze in accordance with QQ-B-750 or beryllium copper in accordance with QQ-C-530 or QQ-C-533, or Copper nickel tin alloy C72900 in accordance with ASTM B 740.

3.3.5.1 Contact finish. All contact finishes shall have an underplate of copper in accordance with MIL-C-14550 (100 microinches) or nickel in accordance with QQ-N-290, class 2 (30 to 150 microinches). A gold plating in accordance with MIL-G-45204, type I is permissible under type II gold. Silver underplate shall not be used. Either an overall finish (3.3.5.1.1) or a localized finish (3.3.5.1.2) is permitted.

Note: When contacts have been provided in strip form, the absence of plating in the area where the contact was removed from the strip is acceptable provided it is in a nonfunctional area and any corrosion formed as a result of salt spray testing does not creep into the contact mating area.

3.3.5.1.1 Overall finish. All parts of the contact shall be gold plated in accordance with MIL-G-45204, type II, grade C, class 1 (.00005 minimum thickness).

3.3.5.1.2 Localized finish.

3.3.5.1.2.1 Contact mating area. The contact mating area shall be gold in accordance with MIL-G-45204, type II, grade C, class 1, over nickel plating in accordance with QQ-N-290, class 2 (30 to 150 microinches). The contact mating area is defined by figure 1 for contact designs similar to configuration A, figure 2 for contact designs similar to configurations B or C, or figure 3 for contact designs similar to configuration D, or figure 4 for contact designs similar to configuration E.

3.3.5.1.2.2 Terminations.

a. Solder termination areas shall be tin-lead plated in accordance with MIL-P-81728, .0001 inch minimum. The tin content for class b shall be 50 to 70 percent. For classes a or c, and type cs, the tin content shall be 50 to 95 percent.

b. Crimp termination (class C) areas shall be gold plated in accordance with MIL-G-45204, type II, grade C, class 1 over a nickel underplate in accordance with QQ-N-290, class 2 (30 to 150 microinches).

Source: https://assist.dla.mil -- Downloaded: 2016-11-15T22:12Z
Check the source to verify that this is the current version before use.

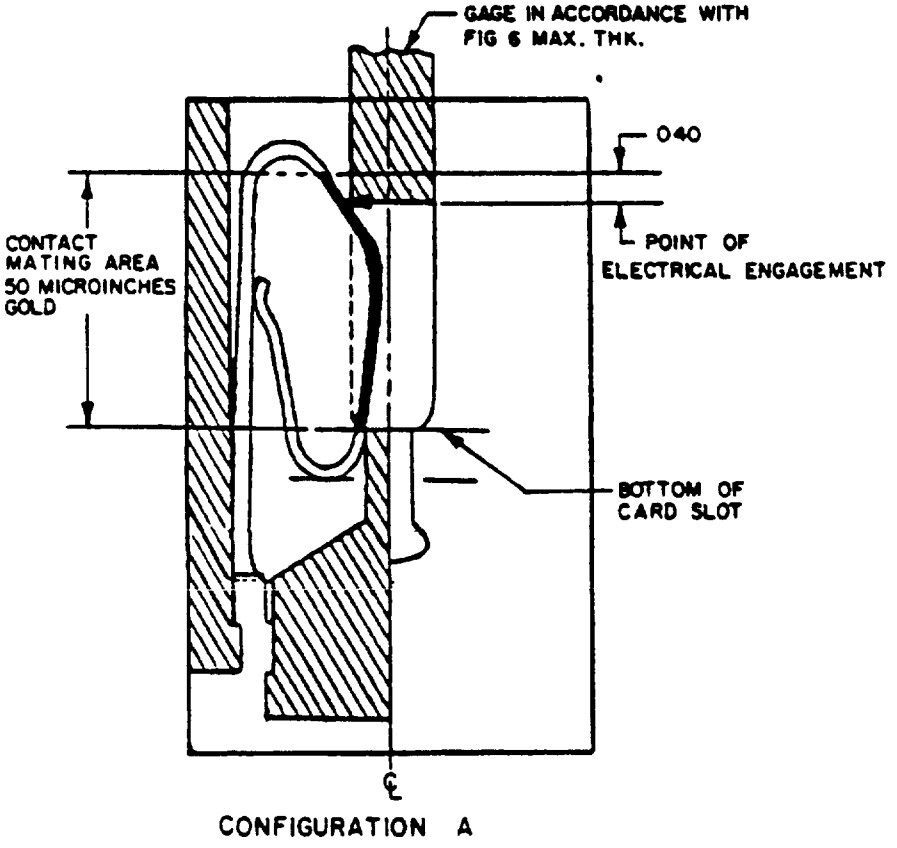

FIGURE 1. Contact mating area.

Source: https://assist.dla.mil -- Downloaded: 2016-11-15T22:12Z
Check the source to verify that this is the current version before use.

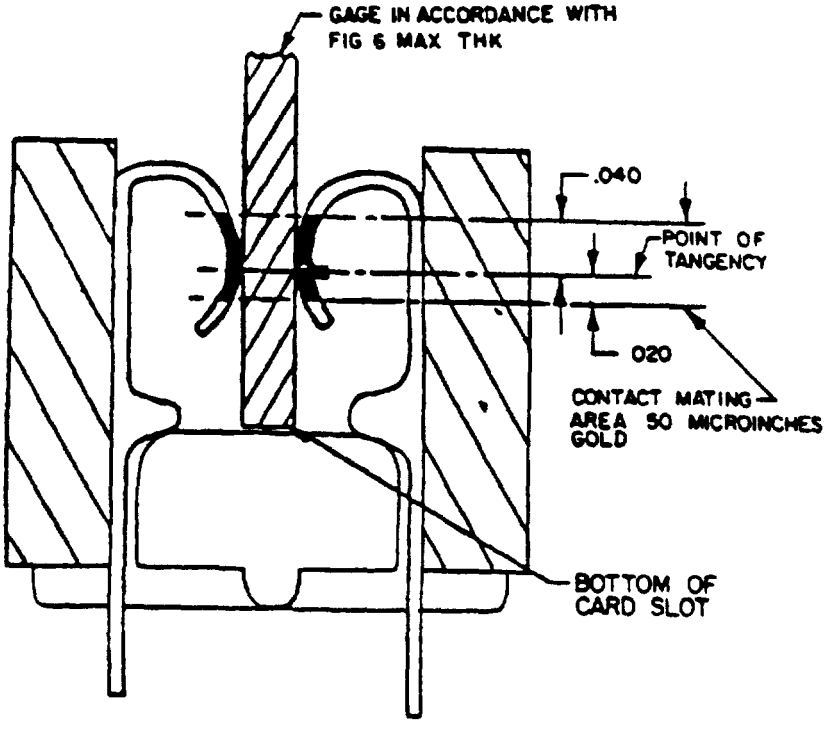

CONFIGURATION B

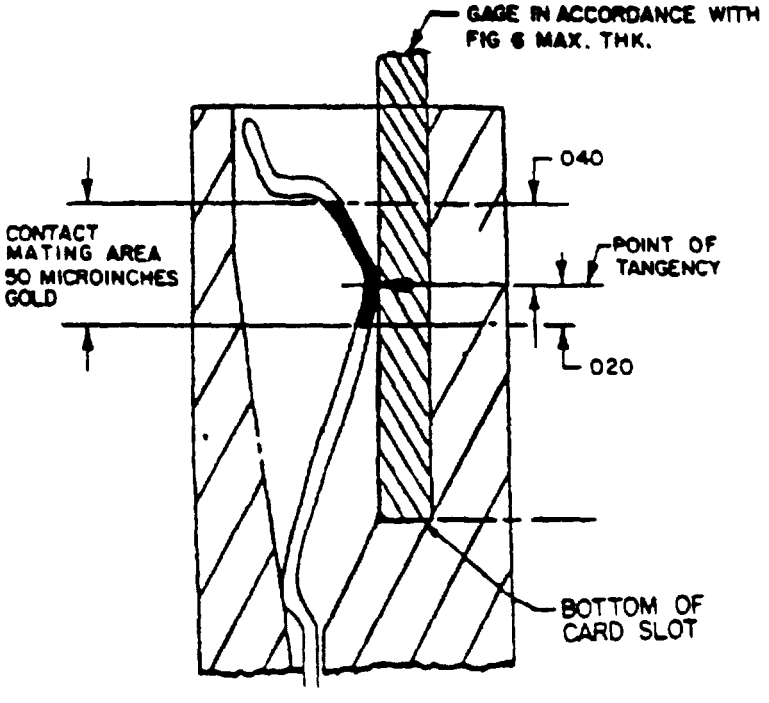

CONFIGURATION C

FIGURE 2. Contact mating area.

Source: https://assist.dla.mil -- Downloaded: 2016-11-15T22:12Z
Check the source to verify that this is the current version before use.

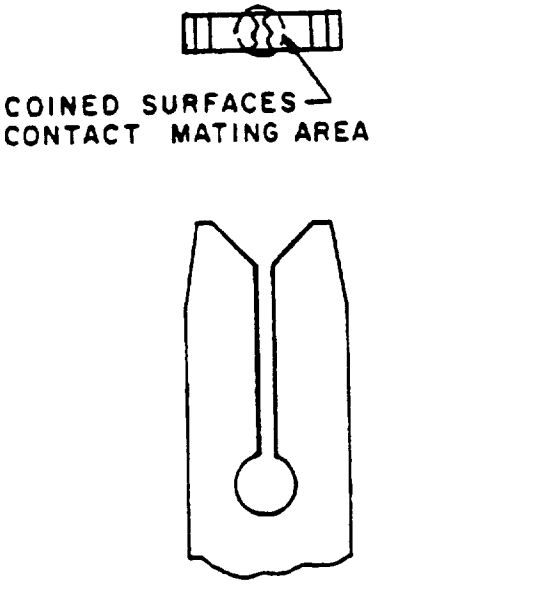

FIGURE 3. Contact mating area.

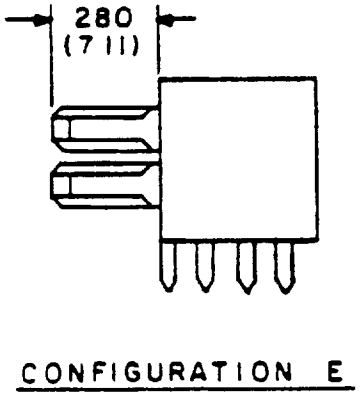

FIGURE 4. Contact mating area.

Source: https://assist.dla.mil -- Downloaded: 2016-11-15T22:12Z
Check the source to verify that this is the current version before use.

3.3.5.1.2.3 Nonfunctional areas. Any portion of the contact other than the contact mating area or termination area shall, as a minimum, have a nickel plating in accordance with QQ-N-290, class 2 (30 to 150 microinches).

3 3.6 Contact springs. Unless otherwise specified (see 3.1), contact springs shall be made from a suitable copper alloy material. The contact springs shall be gold-plated in accordance with MIL-G-45204, type II, class 1, except that silver underplate shall not be used.

3.4 Design and construction. Connectors shall be of the design, construction, and physical dimensions specified (see 3.1). Barriers may be used as necessary to meet leakage requirements. Solderless wrap terminations areas shall be tin lead plated in accordance with MIL-P-81728 .0001 to .0003 inch thick. The tin lead composition shall be 50 to 95 percent tin.

3.4.1 Body design. Connector bodies shall be designed and constructed with proper sections and radii to preclude cracking, chipping, or breaking during assembly or in normal service. Depressions used to achieve longer creepage paths shall not be used so as to cause structural weakness.

3.4.2 Contacts. Contacts shall be as specified (see 3.1). The contacts shall be designed in such a way that they will not be damaged by mating and unmating in the normal manner, nor shall they damage the printed wiring board to an extent beyond normal wear. Pin contacts shall also be capable of being crimped with a crimping tool in accordance with MIL-C-22520.

3.4.2.1 Contact spacing. The center to center distance between contacts shall be as specified (see 3.1).

3.4.2.2 Contact arrangements. Contacts shall be arranged in accordance with individual type requirements as specified (see 3.1).

3.4.2.3 Contact finish. Contact finish shall be smooth, free of shear lines, tear out or scratches, and shall show no signs of porosity or surface cracks when examined under 10-power magnification.

3.4.2.4 Contact and terminal identification. All contact and terminal designations shall be permanent and legible and shall be located on the front and rear faces of the connector body as indicated (see 3.1). Contact positions on the front face shall be identified by raised numerals. Rear face termination positions shall be identified by either raised numerals or flush numerals in contrasting color.

3.4.3 Polarization. Polarization of the connector assembly, when required, shall be accomplished by the installation of a polarizing key in any one or more contact positions, or between contact positions. Contacts shall not be removed for polarization purposes. Polarization shall be accomplished before engagement of the contacts and shall prevent the mating of the connector assembly in any manner other than the method intended. Polarizing keys shall have the dimensions and characteristics as specified (see 3.1).

3.4.4 Mating. Printed wiring board and receptacles shall be capable of mating and unmating by hand without the use of special tools within the temperature range for these connectors (see 3.5.2).

3.4.5 Insertion and removal tools. Insertion and removal tools shall be as specified (see 3.1).

3.5 Electrical characteristics.

3.5.1 Contact current rating. Unless otherwise specified (see 3.1), the maximum current rating for all type contacts shall be 5.0 amperes.

3.5.2 Operating temperatures. Connectors shall be capable of continuous operation within a temperature range of -65°C to +125°C.

3.6 Permeability. When connectors are tested as specified in 4.7.2, the permeability shall be less than 2.0.

Source: https://assist.dla.mil -- Downloaded: 2016-11-15T22:12Z
Check the source to verify that this is the current version before use.

3.7 Insulation resistance. When connectors are tested as specified in 4.7.3, the insulation resistance shall be not less than the applicable value specified below:

a. Connectors (individual contact) mounted to PC boards - 500 megohms.

b. Connectors not mounted to PC boards - 5,000 megohms.

3.8 Dielectric withstanding voltage. When connectors are tested as specified in 4.7.4, there shall be no evidence of flash-over or breakdown when the voltages specified in table IV are applied between adjacent contacts and between any external mounting hardware and the closest contacts to the hardware.

TABLE IV. Voltages for contact spacing.

Pressure equivalent to	Test voltages for contact spacing (in inches)					
	0.050	0.075	0.100	0.125	0.156	0.200
Sea level - - - - -	375	375	650	1500	1800	1800
50,000 feet - - - -	275	275	275	500	675	675
70,000 feet - - - -	275	275	275	325	450	450

3.9 Contact resistance. When connectors are tested as specified in 4.7.5, unless otherwise specified (see 3.1), the initial contact resistance shall not exceed 30 millivolts. In addition, the difference between the initial measurement and any succeeding measurement made upon an identical individual contact shall not increase by more than 50 percent of the initial measurement.

3.10 Engagement and separation forces (board side).

3.10.1 Individual contact engegement and separation forces.

3.10.1.1 Test I (applicable only to types A and AD). When connectors are tested as specified in 4.7.6.1.1, the individual contact engagement force shall not exceed 16 ounces. Unless otherwise specified (see 3.1), the separation force shall be not less than 1 ounce.

3.10.1.2 Test II (type CR, as applicable). When connectors are tested as specified in 4.7.6.1.2, the individual contact engagement force shall not exceed 16 ounces and the separation force shall be not less than 2 ounces.

3.10.2 Total engagement force (applicable only to types A and AD). When connectors are tested as specified in 4.7.6.2, unless otherwise specified (see 3.1), the total engagement force shall be not greater than the values shown in table V.

TABLE V. Total connector engagement force.

Number of contact positions	Maximum board insertion force (gage)
6	8 pounds
10	12
15	19
18	22
22	27
25	28
28	35
30	38
36	45
43	54

3.11 Temperature cycling. When connectors are tested as specified in 4.7.7, there shall be no evidence of physical damage. Upon completion of test, insulation resistance and dielectric withstanding voltage shall meet the requirements of 3.7 and 3.8.

Source: https://assist.dla.mil -- Downloaded: 2016-11-15T22:12Z
Check the source to verify that this is the current version before use.

3.12 Vibration. When complete connector assembly, printed wiring board, and receptacle are tested as specified in 4.7.8, there shall be no cracking, breaking, or loosening of parts. There shall be no loss of electrial continuity of any contact circuits for a period greater than 1 microsecond.

3.13 Shock. When connectors are tested as specified in 4.7.9, there shall be no evidence of mechanical failure of metallic or dielectric materials. There shall be no loss of electrical continuity greater than a period of 1 microsecond. Upon completion of testing, the engagement and separation forces shall meet the requirements of 3.10.1 and 3.10.2.

3.14 Bond strength, body assembly. Where applicable, when the insulating body of the connector is constructed of two or more parts, the connector shall be tested as specified in 4.7.10. The connector shall show no evidence of cracking, breaking, loosening of parts, or delamination of the assembly when a force of 1 pound per position is applied.

3.15 Contact retention.

3.15.1 Crimp and solder type CR contacts. When connectors are tested as specified in 4.7.11, the contacts shall withstand an axial load of 10 pounds.

3.16 Board insertion force (overstress). When connectors are tested as specified in 4.7.12, there shall be no evidence of physical damage. The engagement and separation forces shall meet the requirements of 3.10.1 or 3.10.2, as applicable.

3.17 Humidity. When connectors are tested as specified in 4.7.13, the insulation resistance of the connector shall be not less than 1,000 megohms.

3.18 Durability (board side) (applicable only to types A, AD, and CR). When connectors are tested as specified in 4.7.14.1 or 4.7.14.2, the body and contacts shall show no evidence of physical damage. Unless otherwise specified (see 3.1), the contact resistance shall meet the requirements of 3.9, and the individual contact separation force shall be not less than 1 ounce.

3.19 Salt spray (corrosion). When connectors are tested as specified in 4.7.15, any corrosion resulting from the salt spray test shall not interfere with the mating or unmating of the printed wiring board and receptacle and shall not impair the electrical function of the connector.

3.20 Low-signal level contact resistance. When connectors are tested as specified in 4.7.16, the resistance of any contact shall not exceed 7 milliohms, unless otherwise specified (see 3.1).

3.21 Crimp resistance. When contacts are tested as specified in 4.7.17, crimp resistance shall not exceed the potential drop requirements of table VI.

TABLE VI. Crimp contact resistance.

Wire size	Test current	Initial maximum millivolt drop	After test maximum millivolt drop
28	1.0	3.0	5.0
26	1.0	2.5	4.0
24	3.0	6.0	10.0
22	5.0	6.0	10.0
20	7.5	5.0	9.0
18	10.0	5.0	8.0

3.22 Current cycling (crimp). When contacts are tested as specified in 4.7.18, they shall withstand 50 cycles of exposure to 125 percent of the test current without exceeding the "after test" voltage drop specified in table VI.

3.23 Crimp tensile strength (type CR). When tested as specified in 4.7.19, the individual contact to wire crimp of pin or blade contacts conforming to their applicable specification sheet shall have a minimum tensile strength as specified in table VII.

Source: https://assist.dla.mil -- Downloaded: 2016-11-15T22:12Z
Check the source to verify that this is the current version before use.

TABLE VII. Tensile strength.

Wire size	Minimum tensile strength (lbs)
28	3
26	5
24	8
22	12
20	20
18	30

3.24 Marking. Unless otherwise specified (see 3.1), each connector or adapter shall be marked in accordance with MIL-STD-1285.

3.25 Solderability. Solder terminations shall withstand the test conditions specified in 4.7.20.

3.26 Resistance to soldering heat. Connectors shall withstand the test specified in 4.7.21.

3.27 Resistance to solvents. Connectors shall withstand the test specified in 4.7.22.

3.28 Workmanship. Connectors shall be processed in such a manner as to be uniform in quality and shall be free from defects that will affect life, serviceability or appearance. There shall be no evidence of loose contacts, poor molding or fabricating, damaged or improperly assembled contacts, peeling or chipping of the plating and finish, parting lines of mold which would indicate improper molding techniques, improper tinning of terminals or eyelets and nicks and burrs of metal parts surfaces.

4. QUALITY ASSURANCE PROVISIONS

4.1 Responsibility for inspection. Unless otherwise specified in the contract or purchase order, the contractor is responsible for the performance of all inspection requirements as specified herein. Except as otherwise specified in the contract or purchase order, the contractor may use his own or any other facilities suitable for the performance of the inspection requirements specified herein, unless disapproved by the Government. The Government reserves the right to perform any of the inspections set forth in the specification where such inspections are deemed necessary to assure supplies and services conform to prescribed requirements.

4.1.1 Test equipment and inspection facilities. Test and measuring equipment and inspection facilities of sufficient accuracy, quality and quantity to permit performance of the required inspection shall be established and maintained by the contractor. The establishment and maintenance of a calibration system to control the accuracy of the measuring and test equipment shall be in accordance with MIL-STD-45662.

4.1.2 Assembly plants. Assembly plants must be listed on or approved for listing on the applicable Qualified Products List. The qualified connector manufacturer shall certify that the assembly plant is approved for the distribution of the manufacturer's parts. The assembly plant shall use only piece parts supplied by the qualified connector manufacturer. No testing other than visual inspection is required of certified piece parts obtained from the qualified connector manufacturer, except when there is cause for rejection. Assemblies produced at the assembly plant shall be subjected to group A inspection and a contact retention test to assure that the assembly process conforms with that established at the qualified manufacturing plant. Quality control requirements, including Government inspection surveillance, shall be the same as required for the qualified connector manufacturer.

Source: https://assist.dla.mil -- Downloaded: 2016-11-15T22:12Z
Check the source to verify that this is the current version before use.

4.2 Classification of inspections. The inspections specified herein are classified as follows

a. Materials inspection (see 4.3).

b. Qualification inspection (see 4.5).

c. Quality conformance inspection (see 4.6).

4 3 Materials inspection. Materials inspection shall consist of certification supported by verifying data that the materials listed in table VIII, used in fabricating the connectors, are in accordance with the applicable referenced specifications or requirements prior to such fabrication.

TABLE VIII. Materials inspection.

Material	Requirement paragraph	Applicable specification
Nonmagnetic materials	3.3.1	
Body material	3.3.2	MIL-M-14 or MIL-M-24519
Dissimilar metals	3.3.3	MIL-STD-454, requirement 16
Finish	3.3.4 and 3.3.5	QQ-P-416, QQ-P-35, MIL-G-45204, MIL-P-81728, or QQ-N-290
Contacts	3.3.5	QQ-B-750, QQ-C-530, or QQ-C-533,
Contact springs	3.3.6	MIL-G-45204
Corrosion resistant steel	3.3.4.1	QQ-S-763, QQ-S-766, QQ-P-35, ASTM-A-484, ASTM-A-582, or MIL-F-14072

4.4 Inspection conditions and preparation of samples.

4.4.1 Inspection conditions. Unless otherwise specified herein, all inspections shall be performed in accordance with the test conditions specified in the "GENERAL REQUIREMENTS" of MIL-STD-202 and MIL-STD-1344.

4.4.2 Preparation of samples.

4 4.2.1 Connectors. Unless otherwise specified (see 3.1), connectors having solder type contacts shall be wired using no. 20 AWG wire in accordance with MIL-W-16878, type E.

4.4.2.2 Crimped contacts. Contacts shall be crimped to the appropriate wire size The wire size shall be in accordance with MIL-W-16878, type E.

4.5 Qualification inspection. Qualification inspection shall be performed at a laboratory acceptable to the Government (see 6.3) on sample units produced with equipment and procedures normally used in production.

4.5.1 Sample size. Ten connector assemblies (with a full complement of contacts) of each style shall be subjected to qualification inspection. The samples shall be of the size, mounting provision, and class of the connectors as specified (see 3.1).

4.5.1.1 Individual contact measurements. Unless otherwise specified herein or in the individual specification sheet, individual contact measurements shall be made on 15 contacts in each connector or 50 percent of the contacts in each connector where the number of measurements are limited by style to less than 15 contacts.

4.5.1.2 Crimp type contacts. Fifty crimp type contacts for which approval is desired shall be crimped to the appropriate wire size. Where a contact covers a range of wire sizes, one-half of the contacts of each group shall be crimped to the largest size in the range, and one-half of the contacts of each group shall be crimped to the smallest wire size in the range.

Source: https://assist.dla.mil -- Downloaded: 2016-11-15T22:12Z
Check the source to verify that this is the current version before use.

4.5.2 Inspection routine. The sample shall be subjected to the inspections specified in tables IX and X, as applicable, in the order shown. The sample shall be divided as specified in tables IX and X, and the sample units subjected to the inspection for their particular group.

4.5.3 Failures. One or more failures shall be cause for refusal to grant qualification approval.

4.5.4 Retention of qualification. To retain qualification, the contractor shall forward a summary of group A at 12-month intervals to the qualifying activity. At 36-month intervals a group B report shall be submitted. The qualifying activity will establish the initial reporting date. The report shall consist of:

a. A summary of the results of the tests performed for inspection of product for delivery, group A, indicating as a minimum the number of lots that have passed and the number that have failed. The results of tests of all reworked lots shall be identified and accounted for.

b. A summary of the results of tests performed for periodic inspection, group B, including the number and mode of failures. The summary shall include results of all periodic inspection tests performed and completed during the 36-month period. If the summary of the test results indicates nonconformance with specification requirements, and corrective action acceptable to the qualifying activity has not been taken, action may be taken to remove the failing product from the qualified products list.

Failure to submit the report within 60 days after the end of each 36-month period may result in loss of qualification for the product. In addition to the periodic submission of inspection data, the contractor shall immediately notify the qualifying activity at any time during the 36-month period that the inspection data indicates failure of the qualified product to meet the requirements of this specification.

In the event no production occurred during the reporting period, a report shall be submitted certifying that the company still has the capabilities and facilities necessary to produce the item. If during two consecutive reporting periods there has been no production, the manufacturer may be required, when production begins, at the discretion of the qualifying activity, to submit a representative product of each style to testing in accordance with the qualification inspection requirements.

4.5.5 Approval of assembly plants. The assembly plant shall be approved by the manufacturer of the qualified connector for the distribution of the manufacturer's parts prior to listing on the applicable QPL (see 4.1.2). Tests shall be conducted as specified in 4.1.2.

Source: https://assist.dla.mil -- Downloaded: 2016-11-15T22:12Z
Check the source to verify that this is the current version before use.

TABLE IX. Qualification inspection for connectors.

Inspection	Requirement paragraph	Test method paragraph	Number of sample units to be inspected	Number of failures allowed
Group I				
Visual and mechanical inspection - - -	3.1, 3.3 to 3.4.4 incl, 3.24 and 3.28	4.7.1		
Permeability - - - - - - - - - - - - - -	3.6	4.7.2		
Insulation resistance- - - - - - - - - -	3.7	4.7.3		
Dielectric withstanding voltage- - - -	3.8	4.7.4		
Contact resistance - - - - - - - - - - -	3.9	4.7.5		
Engagement and separation forces (board side) - - - - - - - - - - - - -	3.10	4.7.6		
Individual contact engagement and separation forces- - - - - - - -	3.10.1	4.7.6.1	2	
Test I 1/- - - - - - - - - - - - -	3.10.1.1	4.7.6.1.1		
Test II 2/ - - - - - - - - - - - -	3.10.1.2	4.7.6.1.2		
Total engagement force 1/- - - - -	3.10.2	4.7.6.2		
Contact resistance - - - - - - - - - - -	3.9	4.7.5		
Temperature cycling- - - - - - - - - - -	3.11	4.7.7		
Vibration- - - - - - - - - - - - - - - -	3.12	4.7.8		
Shock- - - - - - - - - - - - - - - - - -	3.13	4.7.9		
Bond strength, body assembly - - - - -	3.14	4.7.10		
Contact retention 3/ - - - - - - - - - -	3.15	4.7.11		
Group II				
Visual and mechanical inspection - - -	3.1, 3.3 to 3.4.4 incl, 3.24 and 3.28	4.7.1		0
Permeability - - - - - - - - - - - - - -	3.6	4.7.2		
Insulation resistance- - - - - - - - - -	3.7	4.7.3		
Dielectric withstanding voltage- - - -	3.8	4.7.4		
Contact resistance - - - - - - - - - - -	3.9	4.7.5		
Board insertion force (overstress) - -	3.16	4.7.12		
Humidity - - - - - - - - - - - - - - - -	3.17	4.7.13		
Durability (board side) 4/ - - - - - - -	3.18	4.7.14	2	
Salt spray (corrosion) - - - - - - - - -	3.19	4.7.15		
Low-signal level contact resistance- -	3.20	4.7.16		
Contact resistance - - - - - - - - - - -	3.9	4.7.5		
Bond strength, body assembly - - - - -	3.14	4.7.10		
Group III				
Visual and mechanical inspection - - -	3.1, 3.3 to 3.4.4 incl, 3.24 and 3.28	4.7.1		
Permeability - - - - - - - - - - - - - -	3.6	4.7.2	2	
Contact resistance - - - - - - - - - - -	3.9	4.7.5		
Durability (board side) 4/ - - - - - - -	3.18	4.7.14		
Bond strength, body assembly - - - - -	3.14	4.7.10		

- - -

See footnotes at end of table.

Source: https://assist.dla.mil -- Downloaded: 2016-11-15T22:12Z
Check the source to verify that this is the current version before use.

TABLE IX. Qualification inspection for connectors - Continued.

Inspection	Requirement paragraph	Test method paragraph	Number of sample units to be inspected	Number of failures allowed
Group IV				
Visual and mechanical inspection - - -	3.1, 3.3 to 3.4.4 incl, 3.24 and 3.28	4.7.1		
Permeability - - - - - - - - - - - - - - -	3.6	4.7.2		
Low-signal level contact resistance- -	3.20	4.7.16	2	
Temperature cycling 5/	3.11	4.7.7		
Humidity 5/- - - - - - - - - - - - - - - -	3.17	4.7.13		
Low-signal level contact resistance- -	3.20	4.7.16		
Group V				
Solderability- - - - - - - - - - - - - - -	3.25	4.7.20		
Resistance to soldering heat - - - - - -	3.26	4.7.21	2	
Resistance to solvents - - - - - - - - -	3.27	4.7.22		

1/ Applicable only to types A and AD.

2/ Type CR, as applicable.

3/ Applicable only to crimp and solder type CR contacts with wire sizes 22 and larger.

4/ Applicable only to types A, AD, and CR.

5/ Connectors tested in this group shall not be subjected to the electrical response measurements specified in the applicable requirements paragraph of these environments. The environments are being used for conditioning of low level test samples.

TABLE X. Qualification inspection for crimp contacts.

Inspection	Requirement paragraph	Test method paragraph	Number of sample units to be inspected	Number of failures allowed
Group I				
Visual and mechanical inspection 2/- -	3.1, 3.3 to 3.4.4 incl, 3.24 and 3.28	4.7.1		
Crimp resistance - - - - - - - - - - - - -	3.21	4.7.17		
Salt spray - - - - - - - - - - - - - - - -	3.19	4.7.15	50	0
Current cycling (crimp)- - - - - - - - -	3.22	4.7.18		
Crimp resistance - - - - - - - - - - - - -	3.21	4.7.17		
Crimp tensile strength 1/- - - - - - - -	3.23	4.7.19		

1/ Type CR, as applicable.

2/ Dimensional measurements are required on eight contacts only.

Source: https://assist.dla.mil -- Downloaded: 2016-11-15T22:12Z
Check the source to verify that this is the current version before use.

4.6 Quality conformance inspection.

4.6.1 Inspection of product for delivery. Inspection of product for delivery shall consist of group A inspection.

4.6.1.1 Inspection lot. An inspection lot shall consist of all connectors and related contacts of the same style and part numbers, produced under essentially the same conditions, and offered for inspection at one time.

4.6.1.2 Group A inspection. Group A inspection shall consist of the inspections specified in table XI, in the order shown.

4.6.1.2.1 Sampling plan. Statistical sampling and inspection shall be in accordance with MIL-STD-105 for general inspection level II. The acceptable quality level (AQL) shall be as specified in table XI. Major and minor defects shall be as defined in MIL-STD-105.

4.6.1.2.2 Rejected lots. If an inspection lot is rejected, the contractor may rework it to correct the defects, or screen out the defective units, and resubmit for reinspection. Resubmitted lots shall be inspected using tightened inspection. Such lots shall be separate from new lots, and shall be clearly identified as reinspected lots.

4.6.2 Periodic inspection. Periodic inspection shall consist of group B. Except where the results of these inspections show noncompliance with the applicable requirements (see 4.6.2.1.4), delivery of products which have passed group A shall not be delayed pending the results of these periodic inspections.

4.6.2.1 Group B inspection. Group B inspection shall consist of the inspections specified in tables XII and XIII, in the order shown. Group B inspection shall be made on sample units selected from inspection lots which have passed the group A inspection.

4.6.2.1.1 Sampling plan. Six connector assemblies (with a full complement of contacts) shall be selected from those covered by a single style, 36 months after the date of notification of qualification, and after each subsequent 36-month period.

TABLE XI. Group A inspection.

Inspection	Requirement paragraph	Test method paragraph	AQL (percent defective) Major	AQL (percent defective) Minor
Group I				
Visual and mechanical inspection - - -	3.1, 3.3 to 3.4.4 incl, 3.24 and 3.28	4.7.1	1%	1%
Engagement and separation forces (board side) - - - - - - - - - - - - -	3.10	4.7.6		
Individual contact engagement and separation forces- - - - - - - -	3.10.1	4.7.6.1		
Test I 1/- - - - - - - - - - - - -	3.10.1.1	4.7.6.1.1		
Total engagement force 1/ - - - -	3.10.2	4.7.6.2		
Dielectric withstanding voltage- - - -	3.8	4.7.4		
Bond strength, body assembly - - - - -	3.14	4.7.10		

1/ Applicable only to types A and AD.

Source: https://assist.dla.mil -- Downloaded: 2016-11-15T22:12Z
Check the source to verify that this is the current version before use.

TABLE XII. Group B inspection for connectors.

Inspection	Requirement paragraph	Test method paragraph	Number of sample units to be inspected	Number of defectives permitted
Group I				
Visual and mechanical inspection - - - -	3.1, 3.3 to 3.4.4 incl, 3.24 and 3.28	4.7.1		
Insulation resistance- - - - - - - - - -	3.7	4.7.3		
Dielectric withstanding voltage- - - - -	3.8	4.7.4		
Contact resistance - - - - - - - - - - -	3.9	4.7.5		
Engagement and separation forces (board side) - - - - - - - - - - - - -	3.10	4.7.6		
Individual contact engagement and separation forces- - - - - - - - -	3.10.1	4.7.6.1		
Test I 1/- - - - - - - - - - - - -	3.10.1.1	4.7.6.1.1		
Test II 2/ - - - - - - - - - - - - -	3.10.1.2	4.7.6.1.2	2	
Total engagement force 1/- - - - - -	3.10.2	4.7.6.2		
Contact resistance - - - - - - - - - - -	3.9	4.7.5		
Temperature cycling- - - - - - - - - - -	3.11	4.7.7		
Shock- - - - - - - - - - - - - - - - - - -	3.13	4.7.9		
Bond strength, body assembly - - - - - -	3.14	4.7.10		
Contact retention 3/ - - - - - - - - - - -	3.15	4.7.11		0
Resistance to soldering heat - - - - - -	3.26	4.7.21		
Resistance to solvents - - - - - - - - -	3.27	4.7.22		
Group II				
Visual and mechanical inspection - - - -	3.1, 3.3 to 3.4.4 incl, 3.24 and 3.28	4.7.1		
Insulation resistance- - - - - - - - - -	3.7	4.7.3		
Dielectric withstanding voltage- - - - -	3.8	4.7.4	2	
Contact resistance - - - - - - - - - - -	3.9	4.7.5		
Board insertion force (overstress) - - -	3.16	4.7.12		
Durability (board side) 4/ - - - - - - -	3.18	4.7.14		
Bond strength, body assembly - - - - - -	3.14	4.7.10		
Group III				
Visual and mechanical inspection - - - -	3.1, 3.3 to 3.4.4 incl, 3.24 and 3.28	4.7.1	2	
Contact resistance - - - - - - - - - - -	3.9	4.7.5		
Durability (board side) 4/ - - - - - - -	3.18	4.7.14		
Bond strength, body assembly - - - - - -	3.14	4.7.10		

1/ Applicable only to types A and AD.

2/ Type CR, as applicable.

3/ Appplicable only to crimp and solder type CR contacts with wire sizes 22 and larger.

4/ Applicable only to types A, AD, and CR.

Source: https://assist.dla.mil -- Downloaded: 2016-11-15T22:12Z
Check the source to verify that this is the current version before use.

TABLE XIII. Group B inspection for crimp contacts.

Inspection	Requirement paragraph	Test method paragraph	Number of sample units to be inspected	Number of defectives permitted
Group I				
Visual and mechanical inspection 2/ - - -	3.1, 3.3 to 3.4.4 incl, 3.24 and 3.28	4.7.1	50	0
Crimp resistance - - - - - - - - - - - - -	3.21	4.7.17		
Salt spray (corrosion) - - - - - - - - - -	3.19	4.7.15		
Crimp resistance - - - - - - - - - - - - -	3.21	4.7.17		
Crimp tensile strength 1/ - - - - - - - -	3.23	4.7.19		

1/ Type CR.

2/ Dimensional measurements are required on eight contacts only.

4.6.2.1.1.1 Contacts. Fifty crimp type contacts shall be crimped to the appropriate wire size and submitted to the tests specified in table XIII. Where a contact covers a range of wire sizes, one-half of the contacts of each group shall be crimped to the largest size in the range and one-half of each group shall be crimped to the smallest wire size in the range.

4.6.2.1.2 Failures. If one or more sample units fail to pass group B inspection, the sample shall be considered to have failed.

4.6.2.1.3 Disposition of sample units. Sample units which have been subjected to group B inspection shall not be delivered on the contract or purchase order.

4.6.2.1.4 Noncompliance. If a sample fails to pass group B inspection, the manufacturer shall notify the qualifying activity and the cognizant inspection activity of such failure and take corrective action on the materials or processes, or both, as warranted, and on all units of product which can be corrected and which were manufactured under essentially the same conditions, with essentially the same materials, processes, and so forth, and which are considered subject to the same failure. Acceptance and shipment of the product shall be discontinued until corrective action, acceptable to the qualifying activity, has been taken. After the corrective action has been taken, group B inspection shall be repeated on additional sample units (all inspections or the inspection which the original sample failed, at the option of the qualifying activity). Group A inspection may be reinstituted; however, final acceptance shall be withheld until the group B reinspection has shown that the corrective action was successful. In the event of failure after reinspection, information concerning the failure and corrective action taken shall be furnished to the cognizant inspection activity and the qualifying activity.

4.6.3 Inspection of packaging. The sampling and inspection of the preservation, packing, and container marking shall be in accordance with the requirements of MIL-C-55330.

4.7 Methods of inspection.

4.7.1 Visual and mechanical inspection. Connector and contacts shall be inspected to verify that the design requirements, construction, materials, dimensions, marking, and workmanship are in accordance with applicable requirements (see 3.1, 3.3 through 3.4.4, 3.24 and 3.28). Standard inspection measuring tools shall be used.

4.7.2 Permeability (see 3.6). The permeability of the assembled connector shall be measured with an indicator in accordance with MIL-I-17214.

Source: https://assist.dla.mil -- Downloaded: 2016-11-15T22:12Z
Check the source to verify that this is the current version before use.

4.7.3 Insulation resistance (see 3.7). Unmated connector assemblies shall be tested in accordance with method 3003 of MIL-STD-1344. The following details and exceptions shall apply:

a. Points of measurement - Between individual contact pairs, and between all contacts and the body.

b. Electrification time - 1 minute.

4.7.4 Dielectric withstanding voltage (see 3.8). Unmated connectors shall be tested in accordance with method 3001 of MIL-STD-1344. The following details and exceptions shall apply:

a. Special conditions - All contacts shall be subjected to the high potential test. They may be wired with alternate series in contacts in a manner to test the high potential characteristics between adjacent not opposing pairs of contacts. There shall be no insulated tubing used over the terminals during this test.

b. Magnitude of test voltage - Applicable value specified at sea level and per contact spacing in table IV, applicable value specified at altitude and per contact spacing in table IV for types CR and CS only.

c. Nature of potential - ac.

d. Duration of application of test voltage - 60 ±10 seconds after voltage requirement is attained. Voltage applied shall be at a rate not exceeding 500 volts per second until test voltage is attained.

4.7.5 Contact resistance (see 3.9). Connectors shall be tested in accordance with method 3004 of MIL-STD-1344. The following detail and exceptions shall apply:

a. Special conditions - The resistance shall be measured at 25°C ±3°C, and the contacts shall be assembled as in service. Resistance of contacts shall be determined by measuring the potential drop across the contact and the mated printed wiring test board specified on figure 4.

(1) For types A and AD - At a point .060 ±030 inch from the connector body, and at a point on the printed wiring test board as shown on figure 5.

(2) Type CR (crimp-wirehole) - At a point on the wire .060 + .030 inch from the connector body solder top at the point where the contact terminal of the mating connector is attached to the printed wiring test board.

b. Test current - 5 amperes dc (ac - rms optional), unless otherwise specified (see 3.1).

4.7.6 Engagement and separation forces (board side) (see 3.10). Connectors shall be tested in accordance with 4.7.6.1.1, 4.7.6.1.2, or 4.7.6.2, as applicable.

4.7.6.1 Individual contact engagement and separation forces.

4.7.6.1.1 Test I (see 3.10.1.1). Prior to making measurements, the contacts shall be conditioned by three insertions of a flat, steel gage of maximum thickness. The dimensions of the gage shall be as shown on figure 6. After the above conditioning, the connector half which houses the receptacle contacts shall be supported and a gage of minimum board thickness (see figure 6) aligned with the individual contacts. The forces to insert and separate that gage shall be measured and recorded.

4.7.6.1.2 Test II (see 3.10.1.2). The connector half which houses the receptacle contacts shall be supported and the gage aligned with the individual contact. The forces to insert and separate that gage shall be measured and recorded. The dimensions of the gage shall be as specified (see 3.1).

Source: https://assist.dla.mil -- Downloaded: 2016-11-15T22:12Z
Check the source to verify that this is the current version before use.

4.7.6.2 Total engagement force (see 3.10.2). Connectors shall be tested for total engagement force of the printed circuit board. The engagement shall be accomplished in a manner similar to that which the connectors are subjected to in service. The gage used shall be of maximum thickness as shown on figure 7.

4.7.7 Temperature cycling (see 3.11). Mated connector assembly, receptacle, and the nominal thickness standard printed wiring test board (see figure 4) shall be tested in accordance with method 1003 of MIL-STD-1344. The following details shall apply:

a. Test condition letter - A. Temperatures to be -65°C +0, -5 and +125°C +3, -0.

b. Measurements during cycling - During the fifth cycle, at temperature specified, the mated connector assembly shall be mated and unmated without use of special tools.

4.7.8 Vibration (see 3.12). Connectors shall be tested in accordance with method 2005 of MIL-STD-1344. The following details shall apply:

a. Mounting of specimens - Receptacle and printed wiring board or receptacle and standard printed wiring test board shall be held together by normal means. For example, use of clamping arrangement utilizing the mounting holes and framework to hold the printed wiring board or the standard printed wiring test board rigidly in its respective receptacle is permitted. Wires shall be supported on a stationary frame not closer than 12 inches from the connectors.

b. Electrical-load conditions - All the contacts shall be connected in series to a suitable testing circuit with at least 0.1 ampere flowing through the contacts.

c. Test condition - III.

d. Measurements during and after test - Contacts shall be monitored for continuity during and after the test. Loss of continuity constitutes a failure.

4.7.9 Shock (see 3.13). The completely mated connector assembly, receptacle and printed wiring test board (see figure 4), the composite connector and the printed wiring test board (see figure 1) with the individual contacts assembled, or the composite connector with mating printed wiring board shall be tested in accordance with method 2004 of MIL-STD-1344. The following details and exceptions shall apply:

a. Mounting method - All contacts shall be wired with the appropriate size wire. Wires shall be supported on a stationary frame not closer than 12 inches from the connectors. Receptacle and printed wiring board, or receptacle and standard printed wiring test board shall be held together by normal means. For example, use of a clamping arrangement utilizing holes and framework to hold the printed wiring board or the standard printed wiring test board rigidly in its respective receptacle is permitted.

b. Reference surfaces - The shock test shall be repeated in each of the referenced 90° axis positions.

c. Test condition letter - C.

d. Measurements and electrical loading - During test, all of the contacts shall be series wired and connected to a suitable testing circuit with at least 0.1 ampere flowing through the contacts. During and after test, the connectors shall be examined for evidence of mechanical failure of metallic or dielectric materials and for loss of electrical continuity. Following this test, the contacts shall be subjected to the applicable contact engagement and separation forces test specified in 4.7.6.

Source: https://assist.dla.mil -- Downloaded: 2016-11-15T22:12Z
Check the source to verify that this is the current version before use.

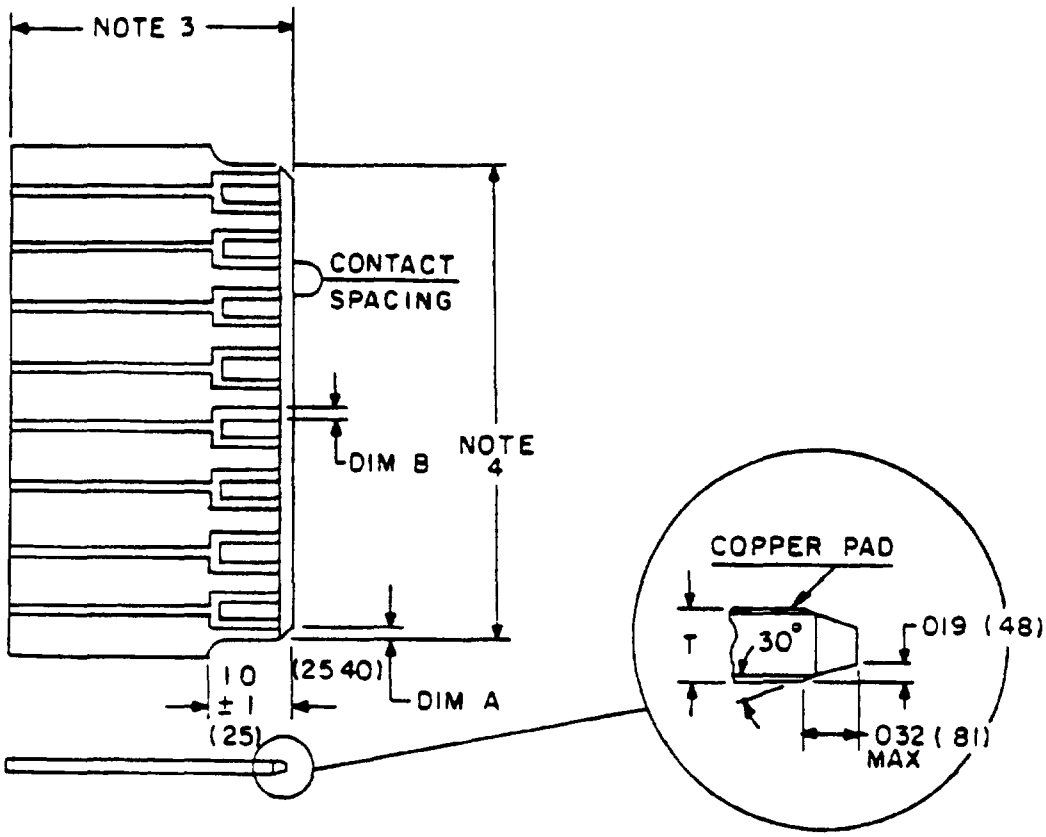

Printed wiring test board

Contact spacing ± 005 (.13) non-accum	Dim A ±.005 (.13)	Dim B	Dimension T ±.005 (.13)				
			Size 0	Size 1	Size 2	Size 3	Size 4
.050 (1.27)	.042 (1.07)	.030 ±.003 (.76 ±.08)	.031 (.79)	.047 (1.19)	.062 (1.57)	.093 (2.36)	.125 (3.18)
.075 (1.91)			.031 (.79)	.047 (1.19)	.062 (1.57)	.093 (2.36)	.125 (3.18)
.100 (2.54)	.093 (2.36)	.052 (1.32)	.031 (.79)	.047 (1.19)	.062 (1.57)	.093 (2.36)	.125 (3.18)
.125 (3.18)							
.156 (3.96)	.105*(2.67)	.094 (2.39)	.031 (.79)	.047 (1.19)	.062 (1.57)	.093 (2.36)	.125 (3.18)
.200 (5.08)	.105 (2.67)	.094 (2.39)	.031 (.79)	.047 (1.19)	.062 (1.57)	.093 (2.36)	.125 (3.18)

*Except M21097/8-4 which is .070 (1.78).

NOTES
1. Dimensions are in inches.
2. Unless otherwise specified, tolerance is ±.005 (0.13 mm) for three place decimals.
3. Test board shall be made of GE062C2/2A11B or equal. The test card shall extend 4.00 (101.60 mm) from the receptacle after insertion.
4. Number of contacts shall be the same as on the corresponding printed wiring connector. (see MIL Specification sheet).
5. Contacts shall be specified in MIL-STD-275, the gold plating shall conform to MIL-STD-275.
6. Metric equivalents are given for general information only.
7. Millimeters are in parentheses.
8. Printed wiring shall be identical on both sides.

FIGURE 4. Printed wiring test board.

Source: https://assist.dla.mil -- Downloaded: 2016-11-15T22:12Z
Check the source to verify that this is the current version before use.

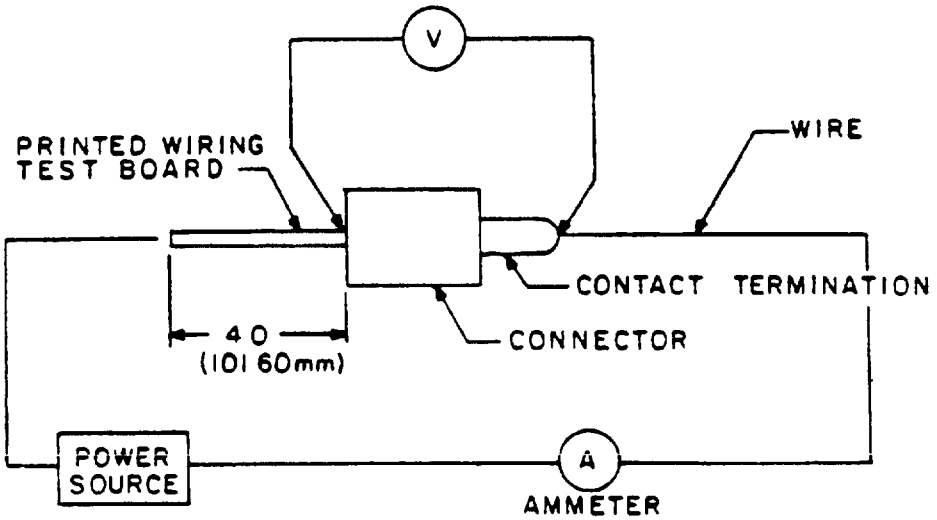

FIGURE 5. Resistance of contacts - types A and AD.

Source: https://assist.dla.mil -- Downloaded: 2016-11-15T22:12Z
Check the source to verify that this is the current version before use.

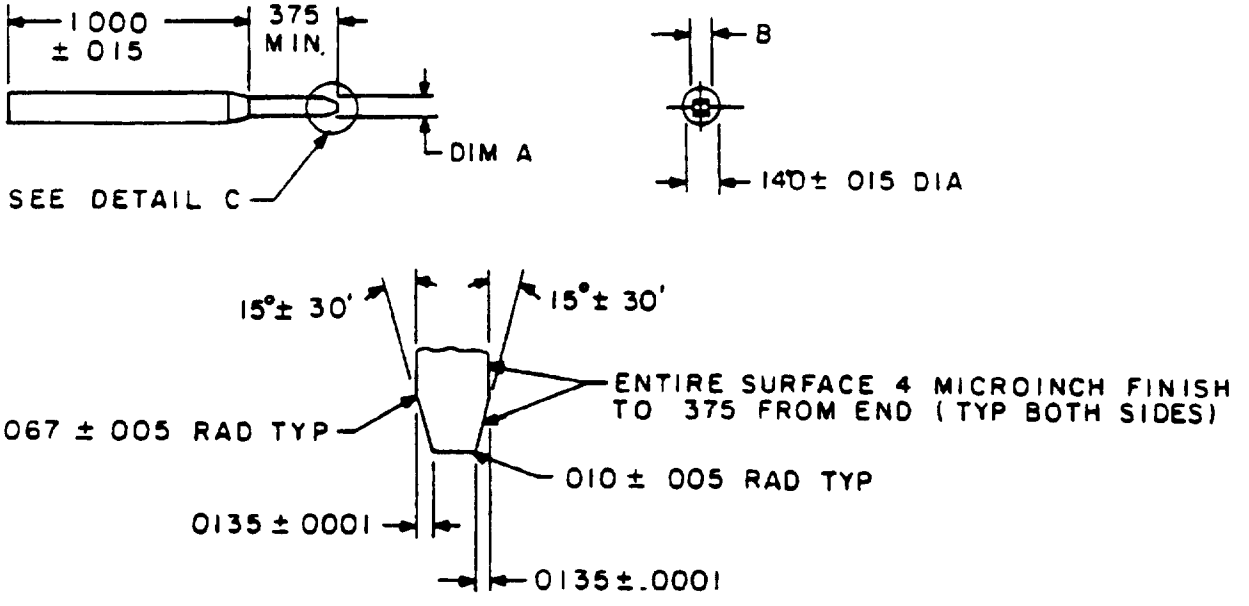

DETAIL C

Dim. "B" ±.001	Contact spacing
.042	.050
.055	.100
.088	.125 & larger

Gage type	Size	Dim. "A" ±.0001
Nominal thickness	2	.0620
	3	.0930
	4	.1250
Maximum thickness	2	.0700
	3	.1030
	4	.1350
Minimum thickness	2	.0540
	3	.0840
	4	.1150

INCHES	MM	INCHES	MM
.0001	.00	.0700	1.78
.005	.13	.0840	2.13
.010	.25	.088	2.24
.0135	.34	.0930	2.36
.015	.38	.100	2.54
.042	1.07	.1030	2.62
.050	1.27	.1150	2.92
.0540	1.37	.1250	3.18
.055	1.40	1350	3.43
.0620	1.57	140	3.56
.067	1.70	.375	9.53
		1.000	25.40

NOTES.
1. Dimensions are in inches.
2. Metric equivalents are given for general information only.

FIGURE 6. Gages-types A and AD.

Source: https://assist.dla.mil -- Downloaded: 2016-11-15T22:12Z
Check the source to verify that this is the current version before use.

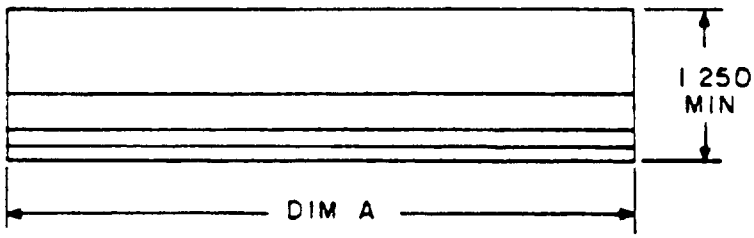

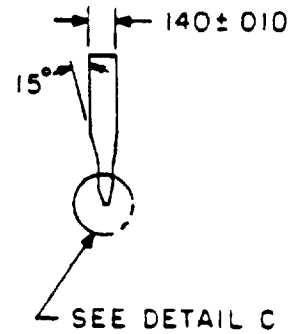

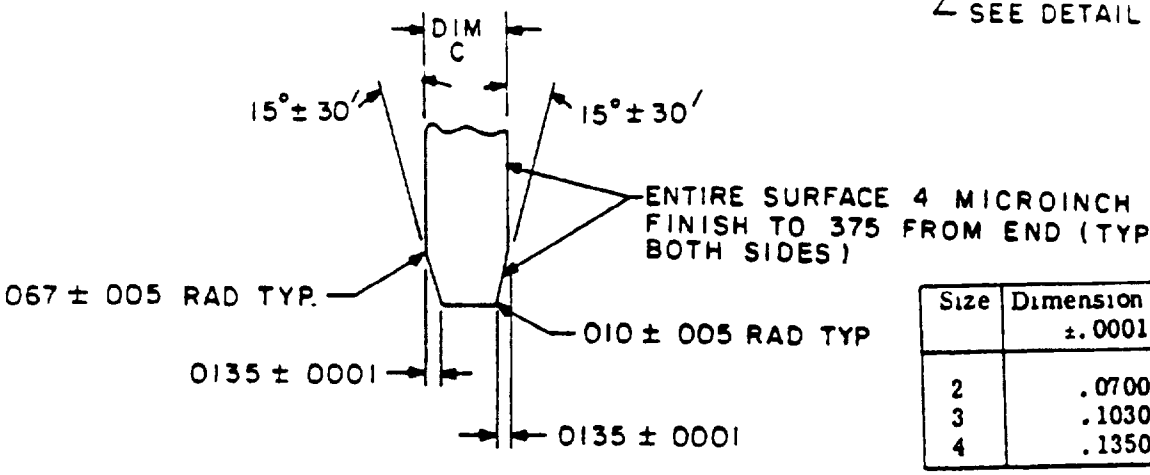

Size	Dimension "C" ±.0001
2	.0700
3	.1030
4	.1350

DETAIL C

INCHES	MM	INCHES	MM	INCHES	MM	INCHES	MM	INCHES	MM	INCHES	MM
0001	00	125	3.18	850	21.59	1.600	40.64	2.660	67.56	3.850	97.79
003	08	1350	3.43	942	23.93	1.694	43.03	2.850	72.39	4.035	102.49
005	.13	.140	3 56	1.042	26.47	1.885	47.88	2 885	73.28	4.085	103.76
010	25	.156	3.96	1.070	27.18	1.975	50.17	2.942	74.73	4.385	111.38
0135	34	.342	8.69	1.085	27.56	2.011	51.08	3.085	78.36	4.502	114.35
050	1 27	375	9.53	1.142	29.01	2.085	52.96	3.225	81.92	4.600	116.84
067	1.70	542	13.77	1.285	32.64	2.285	58.04	3.255	82.68	4 812	122.22
0700	1 78	642	16.31	1.292	32.82	2.350	59.69	3.565	90.55	5.100	129.54
100	2 54	685	17 40	1.350	34.29	2.475	62.87	3.600	91.44	5.475	139.07
1030	2.62	792	20.12	1.585	40.26	2.585	65.66	3.685	93.60	5.750	146.05
										6.374	161.90
										6.771	171.98

Size	"A" dimension for contact spacings of			
	.050	.100	.125	.156
06	.342 ±.003	.685 ±.005	850 ± 010	1.070 ± 010
10	542	1 085	1 350	1.694
12	.642	1 285	1 600	2 011
15	792	1 585	1 975	2 475
18	942	1 885	2 350	2 942
20	1.042	2 085	2 660	3 255
22	1 142	2 285	2 850	3 565
25	1.292	2.585	3 225	4 035
28	--	2 885	3 600	4 502
30	--	3 085	3 850	4 812
36	--	3 685	4 600	5 750
40	--	4 085	5 100	6 374
43	--	4 385	5 475	6 771

NOTES.
1. Dimensions are in inches.
2. Metric equivalents are given for general information only.

FIGURE 7. Edge connector mechanical gages.

Source: https://assist.dla.mil -- Downloaded: 2016-11-15T22:12Z
Check the source to verify that this is the current version before use.

4.7.10 Bond strength, body assembly (see 3.14). The connector shall be subjected to the bond strength test to determine the adhesive separation force. A test fixture such as shown on figure 8 shall be used to perform the tests. Procedures shall be as follows:

a. Secure lower half of connector in a jig or fixture that is one-third the length of the connector, excluding the mounting ears.

b. Support the connector by its normal mounting means only.

c. Gradually obtain a maximum applied force of 50 pounds, perpendicular to the mating surface of the parts.

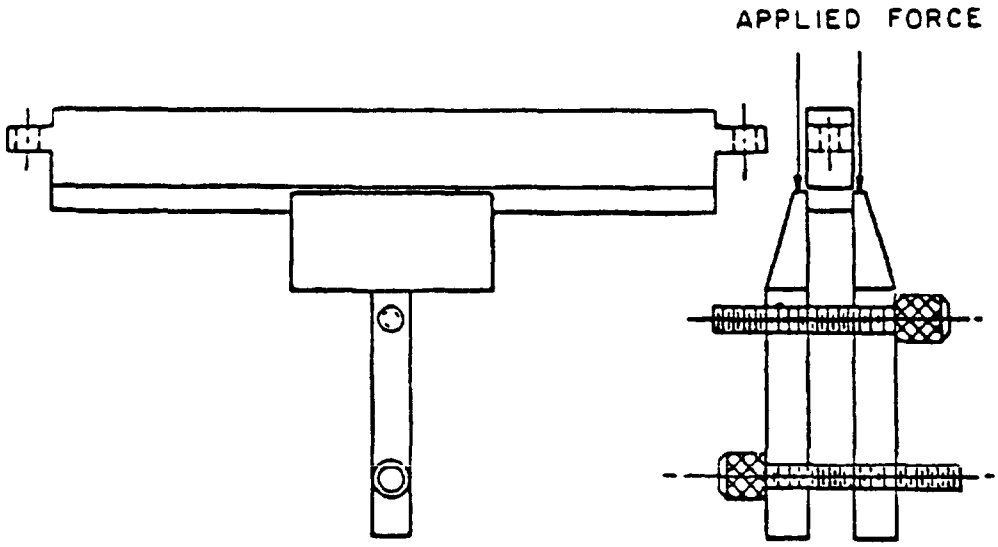

FIGURE 8. Bond strength test.-

4.7.11 Contact retention (see 3.15). The contacts shall be inserted into and extracted from each connector using the applicable removal tool (see 3.1). After the tenth insertion, the connector shall be mounted to an appropriate fixture and the straight axial load applied to the wire of the contacts (applicable to wire sizes 22 and larger). The contacts shall be capable of withstanding the applied force.

4.7.12 Board insertion force (overstress) (see 3.16). Connectors shall be tested for high insertion force by inserting the printed wiring test board specified on figure 4 for types A and AD connectors or mating the types CR and CS assemblies and applying an axial force of 50 pounds in the direction of insertion. Connectors shall then be subjected to the engagement and separation forces tests specified in 4.7.6.1 or 4.7.6.2, as applicable.

4.7.13 Humidity (see 3.17). The unmated connector, receptacle and mating half shall be tested in accordance with method 1002 of MIL-STD-1344. The following details shall apply:

a. Test condition - B, type I.

b. Final measurement - Following this test, the connectors shall be subjected to the insulation resistance test specified in 4.7.3.

Source: https://assist.dla.mil -- Downloaded: 2016-11-15T22:12Z
Check the source to verify that this is the current version before use.

4.7.14 Durability (board side) (see 3.18).

4.7.14.1 Types A and AD. The connectors shall be subjected to 500 insertions of a maximum thickness flat steel gage at a rate of 400 to 600 cycles per hour. The dimensions of the gages shall be as shown on figure 6. Upon completion of the conditioning, the resistance of contacts shall be measured as specified in 4.7.5, and the individual contact separation force shall be measured as specified in 4.7.6.1.1.

4.7.14.2 Type CR. Composite connector receptacles and mating contacts assembled on the nominal thickness printed wiring test board as specified (see 3.1) shall be subjected to 500 cycles of insertion and withdrawal at a rate of 400 to 600 cycles per hour. Upon completion of the conditioning, the resistance of contacts shall be measured as specified in 4.7.5 and the individual contact separation force shall be measured as specified in 4.7.6.1.2.

4.7.15 Salt spray (corrosion) (see 3.19). The mated connector receptacle and printed wiring board or receptacle and the nominal thickness standard printed wiring test board shown on figure 4 shall be tested in accordance with test condition B, method 1001 of MIL-STD-1344.

4.7.16 Low-signal level contact resistance (see 3.20). Connectors shall be tested in accordance with method 3002 of MIL-STD-1344 with the following exception. In lieu of requirement 3(b), the test samples shall be terminated by two wires on each contact. The connectors shall be mated with the printed wiring board. One of the wires shall provide a (series) current lead circuit between contacts and the second wire shall provide a (parallel) contact resistance (voltage drop) measuring point lead. For test points, see figure 5.

4.7.17 Crimp resistance (see 3.21). The potential drop across each contact crimp shall be measured at rated current as shown in table VI. Potential drop readings shall be taken across the two points as shown on figure 9. Measurements shall be taken after the temperature of the wire has stabilized and readings shall comply with the initial test values specified in table VI.

4.7.18 Current cycling (crimp) (see 3.22). Test samples attached to 3-foot lengths of appropriate wire shall be subjected to 50 current cycles. Each cycle shall consist of 30 minutes at 125 percent of the test current specified in table VI, followed by 15 minutes at no load. Voltage drops shall be measured at test current specified in table VI after the test assembly has returned to room temperature.

4.7.19 Crimp tensile strength (see 3.23). Samples for test shall be placed in a standard tensile testing machine and sufficient force applied at an approximate rate of 1 inch per minute to pull the wire out of the sample or break the wire or sample.

4.7.20 Solderability (see 3.25). Contact terminals, except wrappost and crimp shall be subjected to method 208 of MIL-STD-202.

Source: https://assist.dla.mil -- Downloaded: 2016-11-15T22:12Z
Check the source to verify that this is the current version before use.

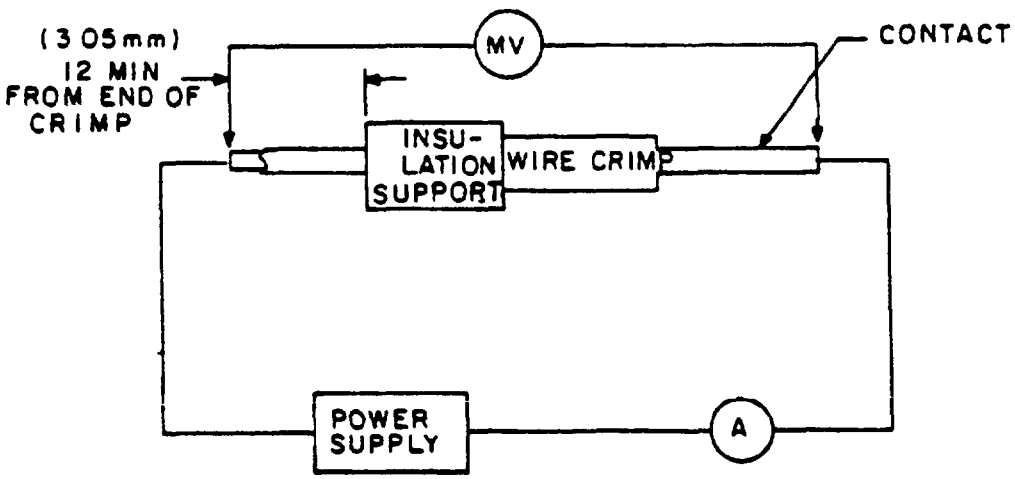

NOTES:
1. Dimensions are in inches.
2. Metric equivalent are given for general information only.

FIGURE 9. Crimp contact resistance.

Source: https://assist.dla.mil -- Downloaded: 2016-11-15T22:12Z
Check the source to verify that this is the current version before use.

4.7.21 Resistance to soldering heat (see 3.26). All connectors with solder terminations shall be tested in accordance with method 210 of MIL-STD-202, condition C, except connectors with solder cup terminations shall be tested in accordance with the following details

a. The applicable wire size properly prepared for the solder cup size shall be inserted into the contact termination. A minimum of seven contacts shall be tested.

b. An appropriately prepared resistance soldering iron with an appropriate tip shall be applied to the lower portion of the solder cup configuration where the wire enters the termination.

c. The solder shall be applied in the normal manner.

d. The resistance soldering iron shall be applied to the system. The wattage shall be adjusted as to allow a proper solder fillet to be formed or for a 4 second minimum time limit, whichever is greater.

e. After application, the soldering iron shall be removed and a visual and mechanical inspection performed.

f. Visual inspection shall be at 1X. The connector shall show no evidence of distortion or damage to any area of the connector housing. The contact shall meet the contact retention requirement as specified in 4.7.6. The contact shall not interfere with normal floating conditions as applicable and must meet applicable location dimensions.

4.7.22 Resistance to solvents (see 3.27). Connectors shall be tested in accordance with the following details:

a. An appropriate size beaker large enough to accept the connectors to be tested shall be selected.

b. The beaker shall be filled to half capacity or to a level which shall completely cover the connectors, whichever is less, with trichloroethylene in accordance with O-T-634, type II.

c. The solution shall be heated to its boiling point and shall be so heated for a 15 minimum time period prior to exposing the connectors and shall be maintained at that level for the duration of the test.

d. The connectors shall be placed in a wire mesh basket of an appropriate size.

e. The wire mesh basket shall be subjected to the following schedule:

(1) Exposed to fumes for 18 seconds.

(2) Immediately lowered into the solution for 42 seconds.

(3) Reexposed to fumes for 18 seconds.

(4) Remove basket from the test beaker.

f. The connectors shall be allowed to cool to room temperature.

g. The connectors shall be examined under 1X magnification. There shall be no evidence of cracking, crazing, discoloration, distortion, or bleeding out of any foreign matter from the material. Pitting shall not be allowed. Change of the surface from a bright to a matte finish shall not be construed as a failure.

h. Connectors so tested shall be fully assembled by normal assembly operations.

Source: https://assist.dla.mil -- Downloaded: 2016-11-15T22:12Z
Check the source to verify that this is the current version before use.

5. PACKAGING

5.1 Packaging requirements. The requirements for packaging shall be in accordance with MIL-C-55330.

6. NOTES

6.1 Intended use. These are one piece PWB connectors and do not meet the requirements of two piece PWB connectors as defined in MIL-STD-275E. These connectors are intended to terminate directly to the PWB.

6.2 Ordering data. Acquisition documents should specify the following:

a. Title, number, and date of this specification.

b. Title, number, and date of the applicable specification sheet and the complete military part number (see 1.3).

c. Level of preservation, packing, and marking required (see 5.1).

6.3 Qualification. With respect to products requiring qualification, awards will be made only for products which are at the time set for opening of bids, qualified for inclusion in the applicable Qualified Products List whether or not such products have actually been so listed by that date. The attention of the contractors is called to this requirement, and manufacturers are urged to arrange to have the products that they propose to offer to the Federal Government tested for qualification in order that they may be eligible to be awarded contracts or purchase orders for the products covered by this specification. The activity responsible for the Qualified Products List is the Space and Naval Warfare Systems Command, ATTN: ELEX 8111, Department of the Navy, Washington, DC 20363; however, information pertaining to qualification of products may be obtained from Defense Electronics Supply Center (DESC-EQ), 1507 Wilmington Pike, Dayton, OH 45444.

6.4 Interchangeability. Printed wiring connectors of a given type, style, class, and size manufactured by one source to the requirements of the specification shall be capable of mating with their associated printed wiring boards of equivalent size manufactured to the requirements of the specification by other sources.

6.5 Changes from previous issue. Asterisks are not used in this revision to identify changes with respect to the previous issue due to the extensiveness of the changes.

Custodians.
Army - CR
Navy - EC
Air Force - 17

Review activities:
Army - MI
Navy - AS
DLA - ES

User activities:
Army - AR, AT, AV, ME
Navy - MC

Preparing activity:
Navy - EC

Agent:
DLA - ES

(Project 5935-3507-1)

Source: https://assist.dla.mil -- Downloaded: 2016-11-15T22:12Z
Check the source to verify that this is the current version before use.

INSTRUCTIONS: In a continuing effort to make our standardization documents better, the DoD provides this form for use in submitting comments and suggestions for improvements All users of military standardization documents are invited to provide suggestions This form may be detached, folded along the lines indicated, taped along the loose edge *(DO NOT STAPLE)*, and mailed In block 5, be as specific as possible about particular problem areas such as wording which required interpretation, was too rigid, restrictive, loose, ambiguous, or was incompatible, and give proposed wording changes which would alleviate the problems Enter in block 6 any remarks not related to a specific paragraph of the document If block 7 is filled out, an acknowledgement will be mailed to you within 30 days to let you know that your comments were received and are being considered

NOTE This form may not be used to request copies of documents, nor to request waivers, deviations, or clarification of specification requirements on current contracts Comments submitted on this form do not constitute or imply authorization to waive any portion of the referenced document(s) or to amend contractual requirements

(Fold along this line)

(Fold along this line)

NO POSTAGE NECESSARY IF MAILED IN THE UNITED STATES

OFFICIAL BUSINESS
PENALTY FOR PRIVATE USE $300

BUSINESS REPLY MAIL
FIRST CLASS PERMIT NO 4966 Alexandria, VA

POSTAGE WILL BE PAID BY

COMMANDER
SPACE AND NAVAL WARFARE SYSTEMS
COMMAND (SPAWAR 8111)
WASHINGTON DC 20363

Source: https://assist.dla.mil -- Downloaded: 2016-11-15T22:12Z
Check the source to verify that this is the current version before use.

STANDARDIZATION DOCUMENT IMPROVEMENT PROPOSAL

(See Instructions – Reverse Side)

1. DOCUMENT NUMBER	2. DOCUMENT TITLE
MIL-C-21097E	CONNECTORS, ELECTRICAL, PRINTED WIRING BOARD, GENERAL PURPOSE, GENERAL SPECIFICATION FOR

3a. NAME OF SUBMITTING ORGANIZATION	4. TYPE OF ORGANIZATION *(Mark one)*
	☐ VENDOR
	☐ USER
b. ADDRESS *(Street, City, State, ZIP Code)*	☐ MANUFACTURER
	☐ OTHER *(Specify)* _____

5. PROBLEM AREAS

a. Paragraph Number and Wording

b. Recommended Wording

c. Reason/Rationale for Recommendation

6. REMARKS

7a. NAME OF SUBMITTER *(Last, First, MI)* – Optional	b. WORK TELEPHONE NUMBER *(Include Area Code)* – Optional
c. MAILING ADDRESS *(Street, City, State, ZIP Code)* – Optional	8. DATE OF SUBMISSION *(YYMMDD)*

DD FORM 82 MAR 1426 PREVIOUS EDITIONS ARE OBSOLETE.

Source: https://assist.dla.mil -- Downloaded: 2016-11-15T22:12Z
Check the source to verify that this is the current version before use.