INCH-POUND

MIL-S-19500/605
10 November 1992

MILITARY SPECIFICATION

SEMICONDUCTOR DEVICE, FIELD EFFECT RADIATION HARDENED (TOTAL DOSE ONLY)
TRANSISTORS, N-CHANNEL, SILICON TYPES 2N7292, 2N7294,2N7296, AND 2N7298
JANTXVM, D, R, H AND JANSM, D AND R

This specification is approved for use by all Departments and Agencies of the Department of Defense.

1. SCOPE

1.1 Scope. This specification covers the detail requirements for an N-Channel, enhancement-mode, MOSFET, radiation hardened (total dose only), power transistor intended for use in high density power switching applications. Two levels of product assurance are provided for each device type specified in MIL-S-19500.

1.2 Physical dimensions. See figure 1 (TO-254).

1.3 Maximum ratings. T_A = +25°C unless otherwise specified.

Type	P_T 1/ T_C = +25°C	P_T T_A = +25°C	V_{DS}	V_{DG}	V_{GS}	I_{D1} 2/ T_C = +25°C	I_{D2} T_C = 100°C	I_S 2/	I_{DM}	T_J and T_{STG}	V_{ISO} 70,000 feet altitude
	W	W	V dc	V dc	V dc	A dc	A dc	A dc	A (pk)	°C	V dc
2N7292	125	2.5	100	100	±20	25.0	20.0	25.0	75	-55	N/A
2N7294			200	200		23.0	15.0	23.0	69	to	N/A
2N7296			250	250		17.0	11.0	17.0	51	to	N/A
2N7298			500	500		9.0	6.0	9.0	27	+150	500

1/ Derate linearly 1.2°C/W for T_C > +25°C; $P_T = \frac{T_{JM} - T_C}{R_{\theta JC}}$

2/ $I_D = \sqrt{\frac{T_{JM} - T_C}{\left(R_{\theta JC}\right) \times \left(R_{DS}(\text{ on }) \text{ at } T_{JM}\right)}}$

Beneficial comments (recommendations, additions, deletions) and any pertinent data which may be of use in improving this document should be addressed to: NASA/Parts Project Office (NPPO), NASA Goddard Space Flight Center, Code 310.A, Greenbelt, MD 20771 by using the Standardization Document Improvement Proposal (DD Form 1426) appearing at the end of this document or by letter.

AMSC N/A

FSC 5961

DISTRIBUTION STATEMENT A. Approved for public release; distribution is unlimited.

Source: https://assist.dla.mil -- Downloaded: 2016-12-04T21:50Z
Check the source to verify that this is the current version before use.

1.4 Primary electrical characteristics at T_C = +25°C.

Type	Min $V_{(BR)DSS}$ V_{GS} = 0 I_D = 1.0 mA dc	$V_{GS(th)1}$ $V_{DS} \geq V_{GS}$ I_D = .250 mA dc	Max I_{DSS1} V_{GS} = 0 V_{DS} = 80 percent of rated V_{DS}	Max $r_{DS(on)}$ 1/ V_{GS} = 10 V dc		$R_{\theta JC}$ max	I_{AS} = I_{DM}	E_{AS} at I_{AS}
				T_J = +25°C at I_{D2}	T_J = +125°C at I_{D2}			
	V dc	V dc Min	Max	µA dc	ohm	ohm	°C/W	A(pk)	mJ
2N7292	100	2.0	4.0	25	0.070	0.140	1.00	75	281
2N7294	200				0.115	0.253		69	238
2N7296	250				0.185	0.444		51	130
2N7298	500				0.615	1.60		27	36

1/ Pulsed (see 4.5.1).

2. APPLICABLE DOCUMENTS

2.1 Government documents.

2.1.1 Specifications, standards, and handbooks. The following specifications, standards, and handbooks form a part of this document to the extent specified herein. Unless otherwise specified, the issues of these documents are those listed in the issue of the Department of Defense Index of Specifications and Standards (DODISS) and supplement thereto, cited in the solicitation (see 6.2).

SPECIFICATION

MILITARY

MIL-S-19500 - Semiconductor Devices, General Specification for.

STANDARD

MILITARY

MIL-STD-750 - Test Methods for Semiconductor Devices.

(Unless otherwise indicated, copies of federal and military specifications, standards, and handbooks are available from the Standardization Document Order Desk, Building 4D, 700 Robbins Avenue, Philadelphia, PA 19111-5094.)

2.2 Order of precedence. In the event of a conflict between the text of this document and the references cited herein, the text of this document takes precedence. Nothing in this document, however, supersedes applicable laws and regulations unless a specific exemption has been obtained.

3. REQUIREMENTS

3.1 Associated detail specification. The individual item requirements shall be in accordance with MIL-S-19500 and as specified herein.

Source: https://assist.dla.mil -- Downloaded: 2016-12-04T21:50Z
Check the source to verify that this is the current version before use.

3.2 Abbreviations, symbols, and definitions. Abbreviations, symbols, and definitions used herein shall be as specified in MIL-S-19500.

E_{AS} - Single Pulse Avalanche Energy capability

I_{AS} - Rated Avalanche Current, Non-repetitive

$V_{(ISO)}$ - Source pin to case Isolation Voltage

3.3 Design, construction, and physical dimensions. The design, construction, and physical dimensions shall be as specified in MIL-S-19500 and on figure 1.

3.3.1 Lead material and finish. Lead material shall be Kovar or Alloy 52; a copper core or plated core is permitted. Lead finish shall be solderable as defined in MIL-S-19500, MIL-STD-750, and herein. Where a choice of lead finish is desired, it shall be specified in the acquisition documents (see 6.2).

3.3.2 Internal construction. Multiple chip construction is not be permitted to meet the requirements of this specification.

3.4 Marking. Marking shall be in accordance with MIL-S-19500. At the option of the manufacturer, marking of the country of origin may be omitted from the body of the transistor, but shall be retained on the initial container.

3.5 Electrostatic discharge protection. The devices covered by this specification require electrostatic discharge protection.

3.5.1 Handling. MOS devices must be handled with certain precautions to avoid damage due to the accumulation of static charge. However, the following handling practices are recommended (see 3.5).

a. Devices should be handled on benches with conductive handling devices.

b. Ground test equipment, tools, and personnel handling devices.

c. Do not handle devices by the leads.

d. Store devices in conductive foam or carriers.

e. Avoid use of plastic, rubber, or silk in MOS areas.

f. Maintain relative humidity above 50 percent if practical.

g. Care should be exercised during test and troubleshooting to apply not more than maximum rated voltage to any lead.

h. Gate must be terminated to source, R ≤ 100 kilohms, whenever bias voltage is to be applied drain to source.

4. QUALITY ASSURANCE PROVISIONS

4.1 Sampling and inspection. Sampling and inspection shall be in accordance with MIL-S-19500, and as specified herein.

4.2 Qualification inspection. Qualification inspection shall be in accordance with MIL-S-19500, and as specified herein. Alternate flow is allowed for qualification inspection in accordance with figure 2 of MIL-S-19500.

4.2.1 Group E inspection. Group E inspection shall be conducted in accordance with MIL-S-19500, and table V herein.

Source: https://assist.dla.mil -- Downloaded: 2016-12-04T21:50Z
Check the source to verify that this is the current version before use.

4.3 Screening (JANTX, JANTXV, and JANS levels only). Screening shall be in accordance with tables IIa and IIb of MIL-S-19500, and as specified herein. The following measurements shall be made in accordance with table I herein. Devices that exceed the limits of table I herein shall not be acceptable.

4.4 Quality conformance inspection. Quality conformance inspection shall be in accordance with MIL-S-19500, and as specified herein. Alternate flow is allowed for quality conformance inspection in accordance with figure 2 of MIL-S-19500.

4.4.1 Group A inspection. Group A inspection shall be conducted in accordance with MIL-S-19500 and table I herein. (Endpoint electrical measurements shall be in accordance with the applicable steps of table V herein.)

4.4.2 Group B inspection. Group B inspection shall be conducted in accordance with the conditions specified for subgroup testing in table IVa (JANS) and table IVb (JANTX and JANTXV) of MIL-S-19500, and table IIa and table IIb herein. Electrical measurements (endpoints) and delta requirements shall be in accordance with the applicable steps of table V herein.

4.4.3 Group C inspection. Group C inspection shall be conducted in accordance with the conditions specified for subgroup testing in table V of MIL-S-19500, and table III herein. Electrical measurements (endpoints) and delta requirements shall be in accordance with the applicable steps of table V herein.

4.4.4 Group D Inspection. Group D inspection shall be conducted in accordance with MIL-S-19500 and table IV herein.

4.5 Methods of inspection. Methods of inspection shall be as specified in the appropriate tables and as follows.

4.5.1 Pulse measurements. Conditions for pulse measurement shall be as specified in section 4 of MIL-STD-750.

4.5.2 Thermal resistance. Thermal resistance measurements shall be performed in accordance with method 3161 of MIL-STD-750. The maximum limit of $R_{\theta JC(max)}$ = 1.00°C/W. The following parameter measurements shall apply:

a. Measuring current (I_M) - - - - - - - - - - - - - - - 10 mA

b. Drain heating current (I_H) - - - - - - - - - - - - - 4 A

c. Heating time (t_H) - - - - - - - - - - - - - - - - - - Steady-state (see MIL-STD-750, method 3161 for definition)

d. Drain-source heating voltage (V_H) - - - - - - - - - 25 V

e. Measurement time delay (t_{MD}) - - - - - - - - - - - 30 to 60 µs

f. Sample window time (t_{SW}) - - - - - - - - - - - - - 10 µs maximum

Source: https://assist.dla.mil -- Downloaded: 2016-12-04T21:50Z
Check the source to verify that this is the current version before use.

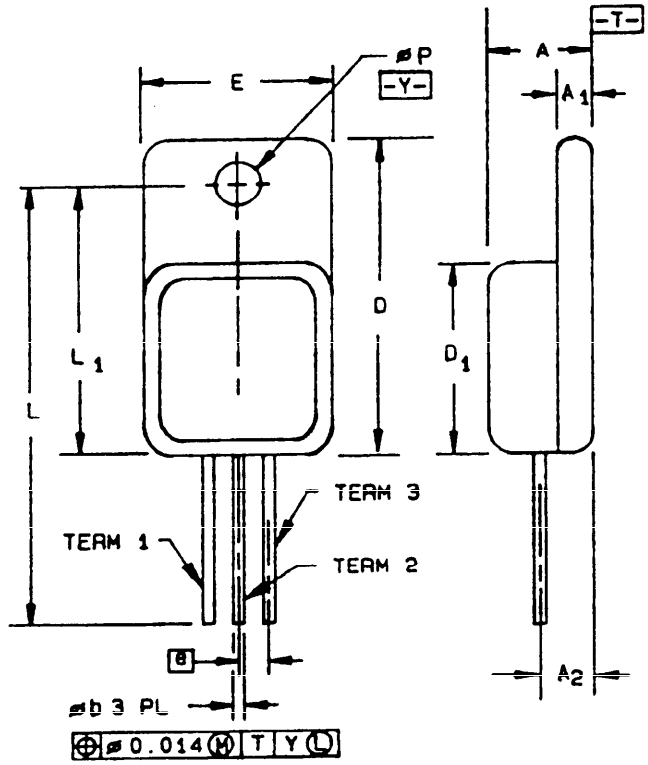

Symbol	AA	
	Min	Max
A	.249 (6.32)	.260 (6.60)
A_1	.040 (1.02)	.050 (1.27)
A_2	.150 BSC (3.81)	
D	.790 (20.07)	.800 (20.32)
D_1	.535 (13.59)	.545 (13.89)
e	.150 BSC (3.81)	
E	.535 (13.59)	.545 (13.89)
L	1.195 (30.35)	1.235 (31.37)
L_1	.665 (16.89)	.685 (17.40)
øp	.139 (1.53)	.149 (3.78)
øb	.035 (0.89)	.045 (1.14)
Term 1	Drain	
Term 2	Source	
Term 3	Gate	

NOTES:
1. Dimensions are in inches.
2. Metric equivalents are given for general information only.
3. Metric equivalents are in parentheses.
4. Refer to applicable symbol list.
5. Dimensioning and tolerancing are in accordance with ANSI Y14.5M.
6. Glass meniscus included in dimensions D and E.

FIGURE 1. Physical dimensions for TO-254.

Source: https://assist.dla.mil -- Downloaded: 2016-12-04T21:50Z
Check the source to verify that this is the current version before use.

Screen (see table II of MIL-S-19500)	Measurement	
	JANS level	JANTX and JANTXV levels
1/	Method 3161 (see 4.5.3)	Method 3161 (see 4.5.3)
1/	Gate stress test (see 4.5.5)	Gate stress test (see 4.5.5)
1/	Method 3470, E_{AS} test (see 4.5.4)	Method 3470, E_{AS} test (see 4.5.4)
2/	Subgroup 2 of table I herein	Subgroup 2 of table I herein
9	I_{GSS}, I_{DSS1}	Not applicable
10	MIL-STD-750, method 1042 test condition B	MIL-STD-750, method 1042 test condition B
11	I_{GSSF1}, I_{GSSR1}, I_{DSS1}, $R_{DS(on)}$, $V_{GS(TH)}$ Subgroup 2 of table I herein; ΔI_{GSSF1} = ±20 nA dc or ±100 percent of initial value, whichever is greater. ΔI_{GSSR1} = ±20 nA dc or ±100 percent of initial value, whichever is greater. ΔI_{DSS1} = ±10 µA dc or ±100 percent of initial value, whichever is greater.	I_{GSSF1}, I_{GSSR1}, I_{DSS1}, $R_{DS(on)}$, $V_{GS(th)}$ Subgroup 2 of table I herein
12	MIL-STD-750, method 1042, test condition A	MIL-STD-750, method 1042, condition A or T_A = +175°C and t = 48 hours min 3/
13	Subgroups 2 and 3 of table I herein; ΔI_{GSSF1} = ±20 nA dc or ±100 percent of initial value, whichever is greater. ΔI_{GSSR1} = ±20 nA dc or ±100 percent of initial value, whichever is greater. ΔI_{DSS1} = ±10 µA dc or ±100 percent of initial value, whichever is greater. $\Delta R_{DS(on)1}$ = ±20 percent of initial value. $\Delta V_{GS(th)1}$ = ±20 percent of initial value.	Subgroups 2 and 3 of table I herein. ΔI_{GSSF1} = ±20 nA dc or 100 percent of initial value, whichever is greater. ΔI_{GSSR1} = ±20nA dc or 100 percent of initial value, whichever is greater. ΔI_{DSS1} = ±10µA dc or 100 percent of initial value, whichever is greater. $\Delta R_{DS(on)1}$ = ±20 percent of initial value. $\Delta V_{GS(th)1}$ = ±20 percent of initial value.

1/ Shall be performed any time after screen 10.
2/ Shall be performed after E_{AS} test, method 3161, and gate stress test.
3/ Use of this accelerated screening option requires a 1,000 hour life test in accordance with applicable group E, subgroup 2 life test, and end-points specified herein to be provided to the qualifying activity for review and acceptance.

Source: https://assist.dla.mil -- Downloaded: 2016-12-04T21:50Z
Check the source to verify that this is the current version before use.

TABLE I. Group A inspection.

Inspection 1/	MIL-STD-750		Symbol	Limits		Units
	Method	Conditions		Min	Max	
Subgroup 1						
Visual and mechanical inspection	2071					
Subgroup 2						
Breakdown voltage, drain to source	3407	V_{GS} = 0 V; I_D = 1 mA dc, bias condition C	$V_{(BR)DSS}$			
2N7292				100		V dc
2N7294				200		V dc
2N7296				250		V dc
2N7298				500		V dc
Gate to source voltage (threshold)	3403	$V_{DS} \geq V_{GS}$, I_D = 1 mA dc	$V_{GS(th)1}$	2.0	4.0	V dc
Gate current	3411	V_{GS} = +20 and -20 V dc, bias condition C, V_{DS} = 0	I_{GSS1}		±100	nA dc
Drain current	3413	V_{GS} = 0 V dc, bias condition C V_{DS} = 80 percent of rated V_{DS}	I_{DSS1}		25	µA dc
Static drain to source "ON"-state resistance	3421	V_{GS} = 10 V dc, condition A, pulsed (see 4.5.1), Id = Id2	$r_{DS(on)1}$			
2N7292					0.070	Ω
2N7294					0.115	Ω
2N7296					0.185	Ω
2N7298					0.615	Ω
Static drain to source "ON"-state resistance	3421	V_{GS} = 10 V dc, condition A, pulsed (see 4.5.1), Id = Id1	$r_{DS(on)2}$			
2N7292					0.074	Ω
2N7294					0.121	Ω
2N7296					0.194	Ω
2N7298					0.646	Ω
Forward voltage	4011	Pulsed (see 4.5.1), Id = Id1 V_{GS} = 0 V dc	V_{SD}			
2N7292					1.8	V dc
2N7294					1.8	V dc
2N7294					1.8	V dc
2N7298					1.8	V dc

See footnote at end of table.

Source: https://assist.dla.mil -- Downloaded: 2016-12-04T21:50Z
Check the source to verify that this is the current version before use.

TABLE I. Group A inspection - Continued.

Inspection 1/	MIL-STD-750		Symbol	Limits		Units
	Method	Conditions		Min	Max	
Subgroup 3						
High temperature operation		$T_C = T_J = +125°C$				
Gate current	3411	V_{GS} = +20 and -20 V dc, bias condition C, $V_{DS} = 0$	I_{GSS2}		±200	nA dc
Drain current	3413	V_{GS} = 0 V dc, bias condition C	I_{DSS2}		1.0	mA dc
		V_{DS} = 100 percent of rated V_{DS}				
		V_{DS} = 80 percent of rated V_{DS}	I_{DSS3}		0.25	mA dc
Static drain to source "ON"-state resistance	3421	V_{GS} = 10 V dc, pulsed (see 4.5.1), Id = Id2	$r_{DS(on)3}$			
2N7292					0.140	Ω
2N7294					0.253	Ω
2N7296					0.444	Ω
2N7298					1.60	Ω
Gate to source voltage (threshold)	3403	$V_{DS} \geq V_{GS}$, I_D = 1 mA dc	$V_{GS(th)2}$	1.0		V dc
Low temperature operation		$T_C = T_J = -55°C$				
Gate to source voltage (threshold)	3403	$V_{DS} \geq V_{GS}$, I_D = 1 mA dc	$V_{GS(th)3}$		5.0	V dc

See footnote at end of table.

Source: https://assist.dla.mil -- Downloaded: 2016-12-04T21:50Z
Check the source to verify that this is the current version before use.

TABLE I. Group A inspection - Continued.

Inspection 1/	MIL-STD-750		Symbol	Limits		Units
	Method	Conditions		Min	Max	
Subgroup 4						
Switching time test	3472	$I_D = I_{D1}$, V_{GS} = 10 V dc, R_G = 25Ω, V_{DD} = 50 percent of rated V_{DS}				
Turn-on delay time			$t_{d(on)}$			
2N7292					134	ns
2N7294					156	ns
2N7296					114	ns
2N7298					148	ns
Rise time			t_r			
2N7292					628	ns
2N7294					510	ns
2N7296					162	ns
2N7298					196	ns
Turn-off delay time			$t_{d(off)}$			
2N7292					642	ns
2N7294					574	ns
2N7296					990	ns
2N7298					800	ns
Fall time			t_f			
2N7292					490	ns
2N7294					280	ns
2N7296					256	ns
2N7298					180	ns
Subgroup 5						
Safe operating area test	3474	See figure 3, 4, 5 t_p = 10 ms minimum V_{DS} = 80 percent of max rated V_{DS} ($V_{DS} \leq 200$)				
Electrical measurements		See table VI, steps 1, 2, 3, 4, 5, 6, and 7				
Subgroup 6						
Not applicable						

See footnote at end of table.

Source: https://assist.dla.mil -- Downloaded: 2016-12-04T21:50Z
Check the source to verify that this is the current version before use.

TABLE I. Group A inspection - Continued.

Inspection 1/	MIL-STD-750		Symbol	Limits		Units
	Method	Conditions		Min	Max	
Subgroup 7						
Gate charge	3471	Condition B				
On-state gate charge		V_{DD} = 0.5 BV_{DSS} $I_D = I_{D1}$	$Q_{g(on)}$			
2N7292		$V_{GS} \leq 20V$			314	nC
2N7294		$I_{GS1} = I_{GS2}$			298	nC
2N7296					264	nC
2N7298					264	nC
Gate to source charge			Q_{gs}			
2N7292					46	nC
2N7294					66	nC
2N7296					48	nC
2N7298					56	nC
Gate to drain charge			Q_{gd}			
2N7292					164	nC
2N7294					144	nC
2N7296					124	nC
2N7298					126	nC
Reverse Recovery Time	3473	di/dt = 100 A/µs, $V_{DD} \leq 30$ V, Id = Id1				
2N7292			T_{rr}		1400	ns
2N7294					1700	ns
2N7296					2000	ns
2N7298					2300	ns

1/ For sampling plan, see MIL-S-19500.

Source: https://assist.dla.mil -- Downloaded: 2016-12-04T21:50Z
Check the source to verify that this is the current version before use.

TABLE IIa. Group B inspection for JANS device.

Inspection 1/	MIL-STD-750	
	Method	Conditions
Subgroup 1		
Physical dimensions	2066	See figure 1
Subgroup 2 2/		
Solderability	2026	
Resistance to solvents	1022	
Subgroup 3		
Temperature cycling (air to air)	1051	Test condition G, 100 cycles
Hermetic seal	1071	
Fine leak Gross leak		
Electrical measurements		See table VI, steps 1, 2, 3, 4, 5, 6, and 7
Decap internal design verification	2075	See 3.3.2
SEM	2077	
Bond strength	2037	Test condition A, all internal wires for each device shall be pulled separately.
Die attach integrity	2017	
Subgroup 4		
Intermittent operation life	1042	Condition D, 2,000 cycles. No heat sink nor forced-air cooling on the device shall be permitted during the on cycle. t_{on} = 30 seconds minimum
Electrical measurements		See table VI, steps 1, 2, 3, 4, 5, 6, 7, and 8

See footnotes at end of table.

Source: https://assist.dla.mil -- Downloaded: 2016-12-04T21:50Z
Check the source to verify that this is the current version before use.

TABLE IIa. Group B inspection for JANS device - Continued.

Inspection 1/	MIL-STD-750	
	Method	Conditions
Subgroup 5 2/		
Accelerated steady-state reverse bias	1042	Condition A, V_{DS} = rated; T_A = +175°C; t = 120 hours min. Read and record $V_{BR(DSS)}$ (pre and post) at I_D = 1 mA. Read and record I_{DSS} (pre and post) in accordance with table VI.
Electrical measurements		See table VI herein, steps 1, 2, 3, 4, 5, 6, and 7. No more than 15 percent of the sample shall be permitted to have a $\Delta V_{BR(DSS)}$ shift of more than 10 percent and ΔI_{DSS} greater than 50 µA.
Accelerated steady-state gate stress	1042	Condition B, V_{GS} = rated; T_A = +175°C t = 24 hours min
Electrical measurements		See table VI herein, steps 1, 2, 3, 4, 5, 6, and 7.
Bond strength (Al-Au die interconnects only)	2037	Test condition A, all internal wires for each device shall be pulled separately
Subgroup 6		
Thermal impedance	3161	See 4.5.2

1/ For sampling plan, see MIL-S-19500.
2/ A separate sample may be used for each test.

Source: https://assist.dla.mil -- Downloaded: 2016-12-04T21:50Z
Check the source to verify that this is the current version before use.

TABLE IIb. Group B inspection for JANTX and JANTXV.

Inspection 1/	MIL-STD-750	
	Method	Conditions
Subgroup 1		
Solderability	2026	
Resistance to solvents	1022	
Subgroup 2		
Temperature cycling (air to air)	1051	Test condition G, 25 cycles
Hermetic seal	1071	
Fine leak		
Gross leak		
Electrical measurements		See table VI, steps 1, 2, 3, 4, 5, 6, and 7
Subgroup 3 2/		
Intermittent operation life (LTPD)	1042	Test condition D, 2,000 cycles; a cycle shall be 30 seconds minimum.
Electrical measurements		See table VI, steps 1, 2, 3, 4, 5, 6, 7, and 8
Bond strength	2037	Test condition A; all internal bond wires for each device shall be pulled separately.
Subgroup 4		
Decap internal visual (design verification)	2075	See 3.3.2
Subgroup 5		
Not applicable		
Subgroup 6		
Not applicable		

1/ For sampling plan, see MIL-S-19500.

2/ If group B-3 is to be continued to group C-6, bond strength test may be performed after group C-6.

Source: https://assist.dla.mil -- Downloaded: 2016-12-04T21:50Z
Check the source to verify that this is the current version before use.

TABLE III. Group C inspection (all quality levels).

Inspection 1/	MIL-STD-750	
	Method	Conditions
Subgroup 1		
Physical dimensions	2066	See figure 1
Subgroup 2		
Thermal shock (glass strain)	1056	Condition B
Terminal strength (tension)	2036	Test condition A, weight = 10 pounds; t = 15 s
Hermetic seal	1071	
Fine leak		
Gross leak		
Moisture resistance	1021	Omit initial conditioning
Electrical measurements		See table VI, steps 1, 2, 3, 4, 5, 6, and 7
Subgroup 3		
Shock	2016	
Vibration variable frequency	2056	
Constant acceleration	2006	
Electrical measurements		See table VI, steps 1, 2, 3, 4, 5, 6, and 7
Subgroup 4		
Salt atmosphere (corrosion)	1041	
Subgroup 5		
Not applicable		
Subgroup 6		
Intermittent operation life	1042	Test condition D, 6,000 cycles. A cycle shall be 30 seconds minimum.
Electrical measurements		See table VI, steps 1, 2, 3, 4, 5, 6, and 7

1/ For sampling plan, see MIL-S-19500.

Source: https://assist.dla.mil -- Downloaded: 2016-12-04T21:50Z
Check the source to verify that this is the current version before use.

TABLE IV. Group D inspection.

Inspection 1/	MIL-STD-750		Symbol	Preirradiation limits		Postirradiation limits		Units
	Method	Conditions		M, D, and R		M, D, and R		
				Min	Max	Min	Max	
Subgroup 1								
N/A								
Subgroup 2		T_C = +25°C						
Steady state total dose irradiation	1019	2/ 3/						
End point electricals								
Breakdown voltage, drain to source	3407	V_{GS} = 0; I_D = 1 mA bias cond. C	$V_{BR(DSS)}$					
2N7292				100		100		V dc
2N7294				200		200		V dc
2N7296				250		250		V dc
2N7298				500		500		V dc
Gate to source voltage (threshold)	3403	$V_{DS} \geq V_{GS}$ I_D = 1 mA	$V_{GS(th)1}$					
2N7292				2.0	4.0	2.0	4.0	V dc
2N7294				2.0	4.0	2.0	4.0	V dc
2N7296				2.0	4.0	2.0	4.0	V dc
2N7298				2.0	4.0	2.0	4.0	V dc
Gate current	3411	V_{GS} = 20 V V_{DS} = 0 bias cond. C	I_{GSSF1}		100		100	nA dc
Gate current	3411	V_{GS} = 20 V V_{DS} = 0 bias cond. C	I_{GSSR1}		-100		-100	nA dc
Drain current	3413	V_{GS} = 0 bias cond. C V_{DS} = 80 percent of rated V_{DS} (preirradiation)	I_{DSS1}					
2N7292					25		25	µA dc
2N7294					25		25	µA dc
2N7296					25		25	µA dc
2N7298					25		25	µA dc

See footnotes at end of table.

Source: https://assist.dla.mil -- Downloaded: 2016-12-04T21:50Z
Check the source to verify that this is the current version before use.

TABLE IV. Group D inspection - Continued.

Inspection 1/	MIL-STD-750		Symbol	Preirradiation limits		Postirradiation limits		Units
	Method	Conditions		M, D, and R		M, D, and R		
				Min	Max	Min	Max	
Subgroup 2 - Continued								
Static drain to source on-state resistance	3421	V_{GS} = 10 V Cond. A pulsed see 4.5.1 $I_D = I_{D2}$	$R_{DS(on)1}$					
2N7292					0.070		0.070	Ω
2N7294					0.115		0.115	Ω
2N7296					0.185		0.185	Ω
2N7298					0.615		0.615	Ω
		V_{GS} = 10 V Cond. A						
2N7292								Ω
2N7294								Ω
2N7296								Ω
2N7298								Ω
Drain source on state voltage	3405	V_{GS} = 10V $I_D = I_{D1}$ Cond. A pulsed see 4.5.1	$V_{DS(on)}$					
2N7292					1.84		1.84	V dc
2N7294					2.78		2.78	V dc
2N7296					3.30		3.30	V dc
2N7298					5.81		5.81	V dc
		V_{GS} = 10 V Cond. A						
2N7292								Ω
2N7294								Ω
2N7296								Ω
2N7298								Ω

1/ For sampling plan see MIL-S-19500.

2/ Inspection requires all subgroup 2 (group D) measurements after exposure to both of the following insitu bias conditions:

V_{GS} = 10 V; V_{DS} = 0
V_{GS} = 0 V; V_{DS} = 80 percent of rated V_{DS}

Each bias condition requires a separate total dose sample.

Source: https://assist.dla.mil -- Downloaded: 2016-12-04T21:50Z
Check the source to verify that this is the current version before use.

TABLE V. Group E inspection (all quality level(s) for qualification only.

Inspection	MIL-STD-750		Qualification and large lot quality conformance inspection
	Method	Conditions	
Subgroup 1			12 devices c = 0
Temperature cycling (air to air)	1051	-55°C to +150°C, 500 cycles	
Hermetic seal	1071		
Fine leak			
Gross leak			
Electrical measurements		See table VI, steps 1, 2, 3, 4, 5, 6, and 7	
Subgroup 2 1/			12 devices c = 0
Steady-state reverse bias	1042	Condition A: 1,000 hours	
Electrical measurements		See table VI, steps 1, 2, 3, 4, 5, 6, and 7	
Steady-state gate bias	1042	Condition B: 1,000 hours	
Electrical measurements		See table VI, steps 1, 2, 3, 4, 5, 6, and 7	
Subgroup 3			
Not applicable			
Subgroup 4			12 devices c = 0
Thermal resistance	3161	$R_{\theta JC}$ = 1.0°C/W maximum. See 4.5.2	

1/ A separate sample for each test shall be pulled.

Source: https://assist.dla.mil -- Downloaded: 2016-12-04T21:50Z
Check the source to verify that this is the current version before use.

TABLE VI. Groups A, B, and C electrical measurements.

Step	Inspection	MIL-STD-750		Symbol	Limits		Units
		Method	Conditions		Min	Max	
1.	Breakdown voltage drain to source	3407	V_{GS} = 0 V; I_D = 1 mA dc; bias condition C	$V_{(BR)DSS}$			
	2N7292				100		V dc
	2N7294				200		V dc
	2N7296				250		V dc
	2N7298				500		V dc
2.	Gate to source voltage (threshold)	3403	$V_{DS} \geq V_{GS}$; I_D = 1 mA dc	$V_{GS(th)1}$	2.0	4.0	V dc
3.	Gate current	3411	V_{GS} = +20 and -20 V dc; V_{DS} = 0 V; bias condition C	I_{GGS1}		±100	nA dc
4.	Drain current	3413	V_{GS} = 0 V dc; bias condition C, V_{DS} = 80 percent of rated V_{DS}	I_{DSS1}		25	μA dc
5.	Static drain to source "ON"-state resistance	3421	V_{GS} = 10 V dc; condition A pulsed (see 4.5.1) $I_D = I_D2$	$r_{DS(on)1}$			
	2N7292					0.070	Ω
	2N7294					0.115	Ω
	2N7296					0.185	Ω
	2N7298					0.615	Ω
6.	Static drain to source "ON"-state resistance	3421	V_{GS} = 10 V dc; condition A pulsed (see 4.5.1) $I_D = I_D1$	$r_{DS(on)2}$			
	2N7292					0.074	Ω
	2N7294					0.121	Ω
	2N7296					0.194	Ω
	2N7298					0.646	Ω
7.	Forward voltage (source drain diode)	4011	Pulsed (see 4.5.1) V_{GS} = 0 V dc $I_D = I_D1$	V_{SD}			
	2N7292					1.8	V dc
	2N7294					1.8	V dc
	2N7296					1.8	V dc
	2N7298					1.8	V dc
8.	Thermal response	3161	See 4.5.3	ΔV_{SD}			

Source: https://assist.dla.mil -- Downloaded: 2016-12-04T21:50Z
Check the source to verify that this is the current version before use.

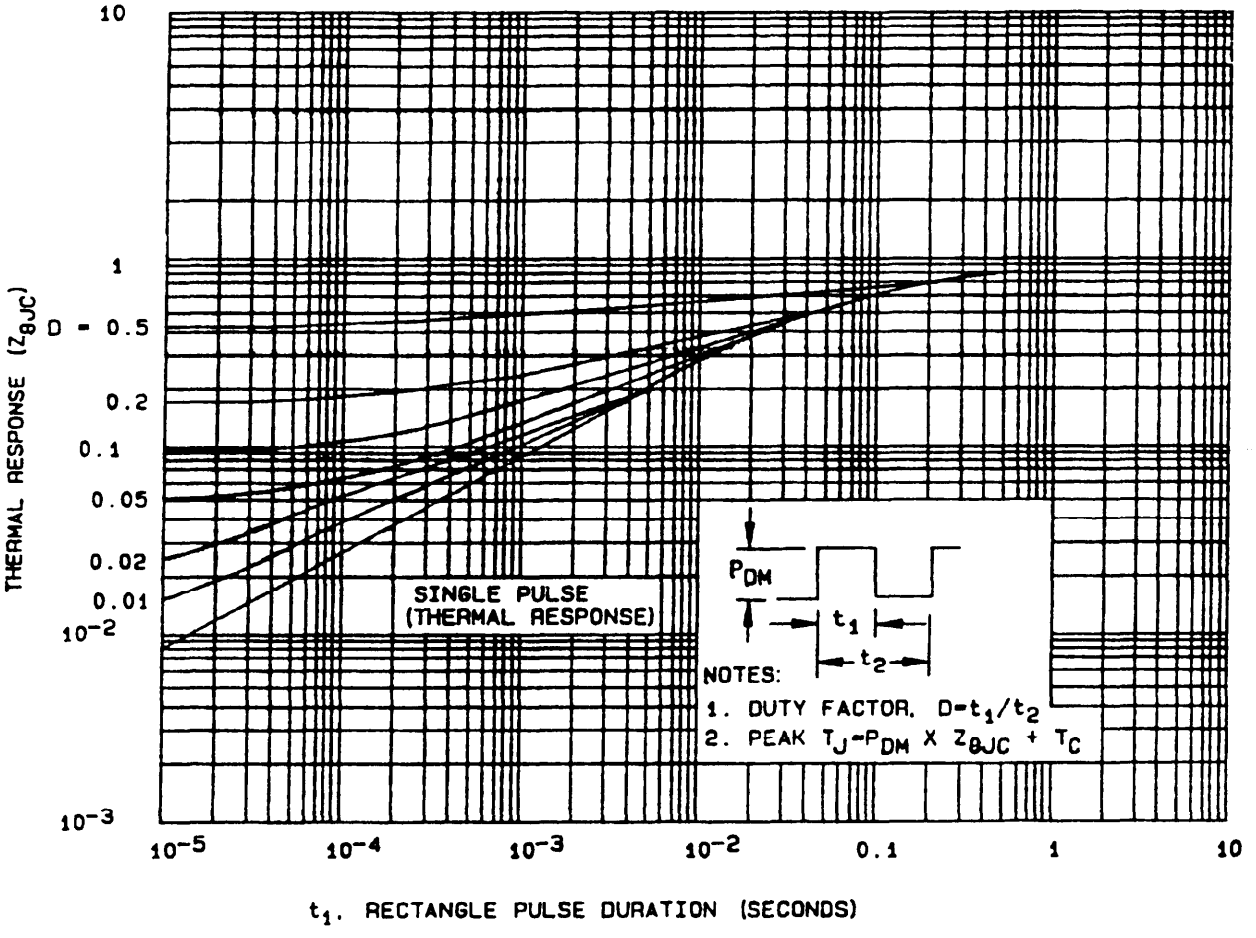

FIGURE 2. Thermal response curves.

Source: https://assist.dla.mil -- Downloaded: 2016-12-04T21:50Z
Check the source to verify that this is the current version before use.

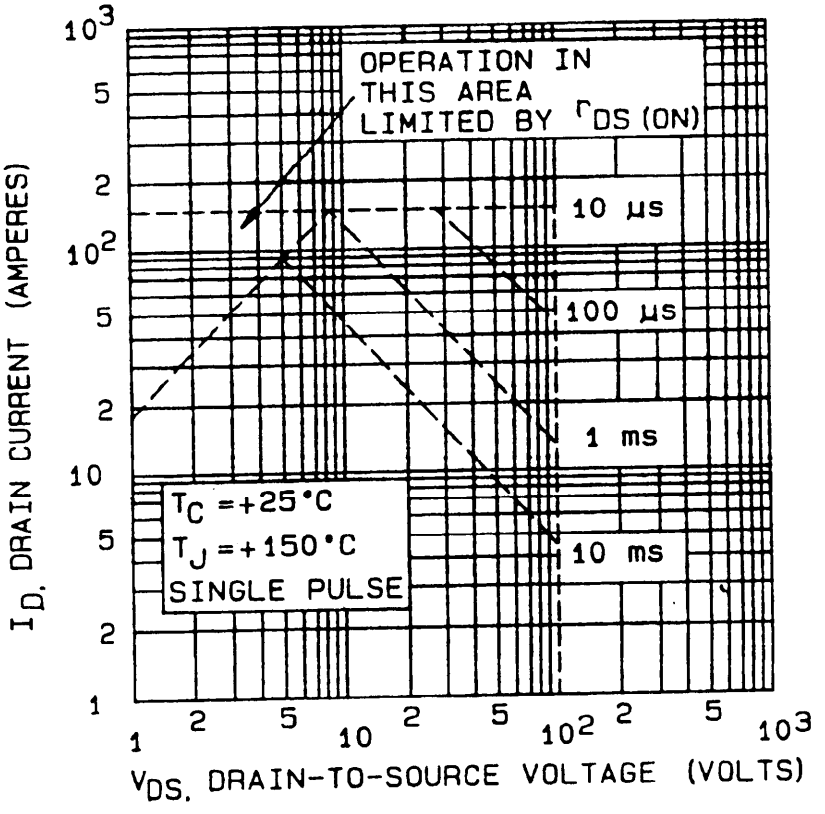

FIGURE 3. Safe operating area graphs.

Source: https://assist.dla.mil -- Downloaded: 2016-12-04T21:50Z
Check the source to verify that this is the current version before use.

2N7294

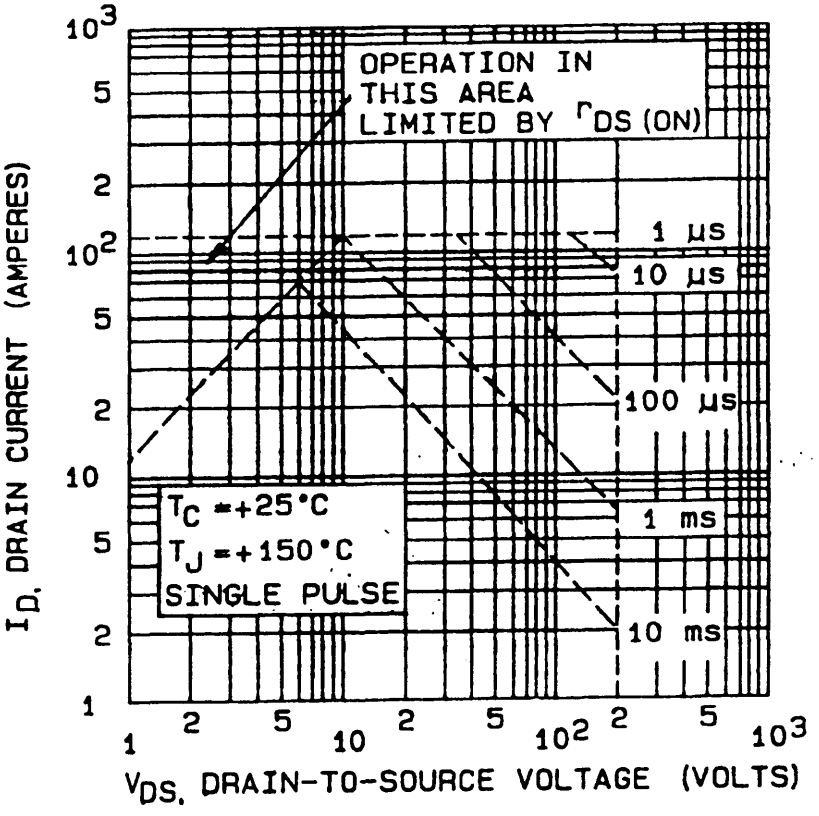

FIGURE 3. Safe operating area graphs - Continued.

Source: https://assist.dla.mil -- Downloaded: 2016-12-04T21:50Z
Check the source to verify that this is the current version before use.

2N7296

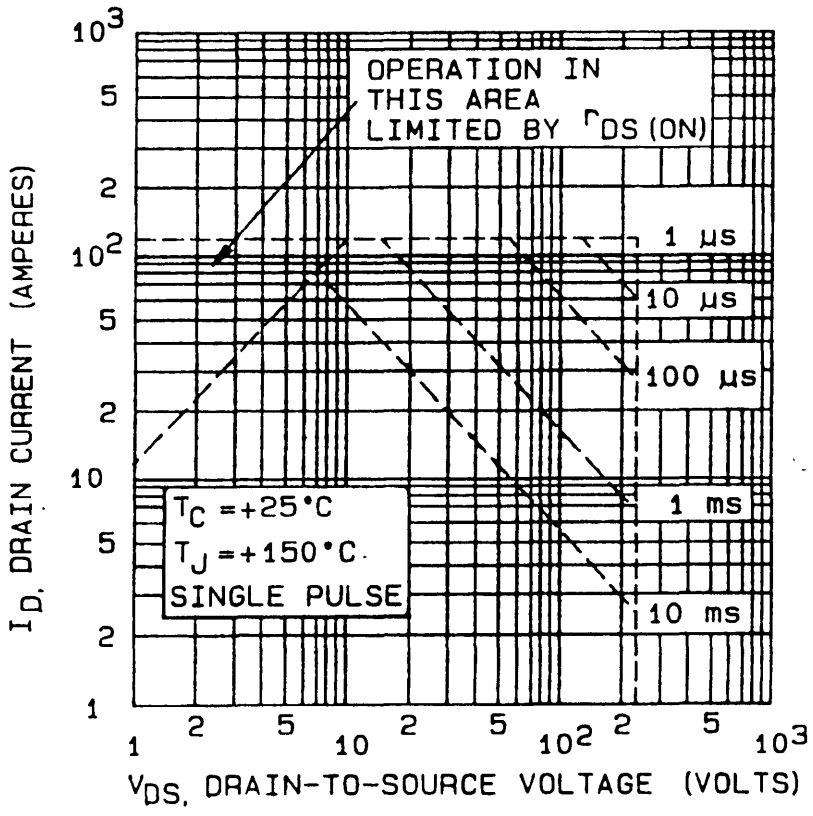

FIGURE 3. Safe operating area graphs - Continued.

Source: https://assist.dla.mil -- Downloaded: 2016-12-04T21:50Z
Check the source to verify that this is the current version before use.

2N7298

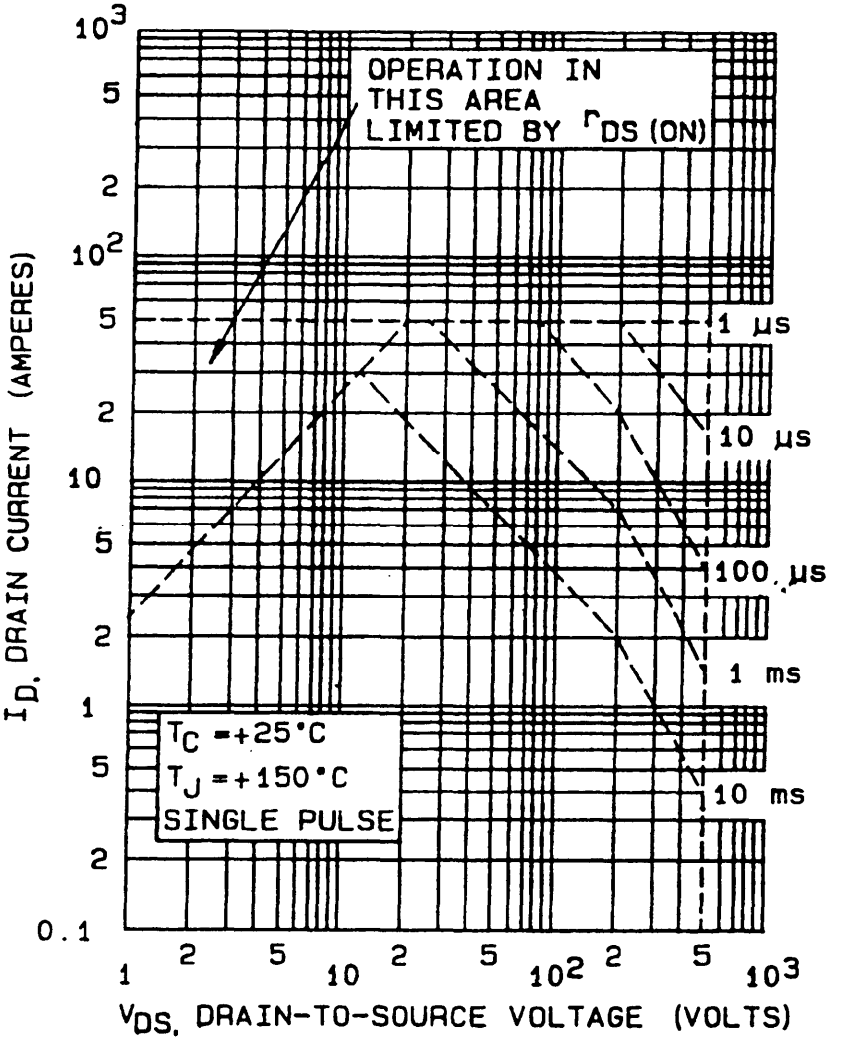

FIGURE 3. Safe operating area graphs - Continued.

Source: https://assist.dla.mil -- Downloaded: 2016-12-04T21:50Z
Check the source to verify that this is the current version before use.

4.5.3 Thermal response (ΔV_{SD} measurement). The delta V_{SD} measurement shall be performed in accordance with method 3161 of MIL-STD-750. The delta V_{SD} conditions (I_H and V_H) and maximum limit shall be derived by each vendor from the thermal response curves (see figure 2) and shall be specified in the certificate of conformance prior to qualification. The following parameter measurements shall apply:

a. Measuring current (I_M) - - - - - - - - - - - - - - - 10 mA

b. Drain heating current (I_H) - - - - - - - - - - - - - 4 A minimum

c. Heating time (t_H) - - - - - - - - - - - - - - - - - - 100 ms

d. Drain-source heating voltage (V_H) - - - - - - - - - 25 V

e. Measurement time delay (t_{MD}) - - - - - - - - - - - 30 to 60 µs

f. Sample window time (t_{SW}) - - - - - - - - - - - - - 10 µs maximum

4.5.4 Single pulse avalanche energy (E_{AS}).

a. $I_{AS} = I_{DM}$

b. L = .1 mH

c. $E_{AS} = 1/2\ LI_{AS}^2$

d. Initial junction temperature = +25°C, $^{+10°C}_{-5°C}$

4.5.5 Gate stress test.

a. V_{GS} = 30 V minimum

b. t = 250 µs minimum

5. PACKAGING

5.1 Packaging requirements. The requirements for packaging shall be in accordance with MIL-S-19500.

6. NOTES

(This section contains information of a general or explanatory nature that may be helpful, but is not mandatory.)

6.1 Notes. The notes specified in MIL-S-19500 are applicable to this specification.

6.2 Acquisition requirements. Acquisition documents should specify the following:

a. Title, number, and date of the specification.

b. Issue of DODISS to be cited in the solicitation and, if required, the specific issue of individual documents referenced (see 2.1).

c. Lead finish may be specified (see 3.3.1).

d. Type designation and product assurance level.

Source: https://assist.dla.mil -- Downloaded: 2016-12-04T21:50Z
Check the source to verify that this is the current version before use.

6.3 Substitution information. Devices covered by this specification are substitutable for the manufacturer's and user's Part or Identifying Number (PIN). This information in no way implies that manufacturer's PIN's are suitable for the military PIN.

Preferred types	Commercial types
2N7292	FRF150 1/
2N7294	FRF250 1/
2N7296	FRF254 1/
2N7298	FRF450 1/

1/ FRFxxxM, FRFxxxD FRFxxxR, 3 k, 10 k, 100 k RAD(Si)

CONCLUDING MATERIAL

Custodians:
Army - ER
Navy - EC
Air Force - 17
NASA - NA

Review activities:
Navy - TD
Air Force - 70, 80
DLA - ES

User activity:
Air Force - 19

Preparing activity:
NASA - NA

Agent:
DLA - ES

(Project 5961-1326)

Source: https://assist.dla.mil -- Downloaded: 2016-12-04T21:50Z
Check the source to verify that this is the current version before use.