INCH-POUND

MIL-S-19500/603
5 May 1992

MILITARY SPECIFICATION

SEMICONDUCTOR DEVICE, FIELD EFFECT RADIATION HARDENED
(TOTAL DOSE ONLY) TRANSISTORS, N-CHANNEL,
SILICON TYPES 2N7268, 2N7269, AND 2N7270
JANTXVM, D, R, H AND JANSM, D, R, H

This specification is approved for use by all Departments and Agencies of the Department of Defense.

1. SCOPE

1.1 Scope. This specification covers the detail requirements for an N-Channel, enhancement-mode, MOSFET, Radiation Hardened (total dose only), power transistor intended for use in high density power switching applications. Two levels of product assurance are provided for each device type specified in MIL-S-19500, with Avalanche Energy Maximum rating (E_{AS}) and Maximum Avalanche Current (I_{AS}).

1.2 Physical dimensions. See figure 1, TO-254AA.

1.3 Maximum ratings. T_A = +25°C, unless otherwise specified.

Type	P_T 1/ T_C = +25°C	P_T T_A = +25°C	V_{DS}	V_{DG}	V_{GS}	I_{D1} 2/ T_C = +25°C	I_{D2} T_C = +100°C	I_S 2/	I_{DM}	T_{op} and T_{STG}	V_{ISO} 70,000 ft. altitude
	W	W	V dc	V dc	V dc	A dc	A dc	A dc	A (pk)	°C	V dc
2N7268	150	4	100	100	±20	34.0	21.0	34.0	136	-55	N/A
2N7269			200	200		26.0	16.0	26.0	104	to	N/A
2N7270			500	500		11.0	7.0	11.0	44	+150	500

1/ Derate linearly 1.2 W/°C for T_C > +25°C; $P_T = \frac{T_J max - T_C}{R_{\theta JC}}$

2/ $I_D = \sqrt{\frac{T_J max - T_C}{(R_{\theta JC}) \times (r_{DSon} \text{ at } T_J max)}}$

Beneficial comments (recommendations, additions, deletions) and any pertinent data which may be of use in improving this document should be addressed to: NASA/Parts Project Office (NPPD), NASA Goddard Space Flight Center Code 310.A, Greenbelt, MD 20771 by using the Standardization Document Improvement Proposal (DD Form 1426) appearing at the end of this document or by letter.

AMSC N/A FSC 5961

DISTRIBUTION STATEMENT A. Approved for public release; distribution is unlimited.

Source: https://assist.dla.mil -- Downloaded: 2016-12-04T21:33Z
Check the source to verify that this is the current version before use.

1.4 Primary electrical characteristics at T_C = +25°C.

Type	Min $V_{(BR)DSS}$ V_{GS} = 0 I_D = 1.0 mA dc	$V_{GS(TH)1}$ $V_{DS} \geq V_{GS}$ I_D = 1.0 mA dc	Max I_{DSS1} V_{GS} = 0 V_{DS} = 80% of rated V_{DS}	Max $r_{DS(ON)}$ 1/ V_{GS} = 12 V dc		$R_{\theta JC}$ max	E_{AS} at I_{D1}	I_{AS}
				T_J = 25°C at I_{D2}	T_J = 150°C at I_{D2}			
	V dc	V dc Min Max	µA dc	ohm	ohm	°C/W	mJ	A
2N7268	100	2.0 4.0	50	0.070	0.132	0.83	500	34.0
2N7269	200			0.115	0.230			26.0
2N7270	500			0.510	1.260			11.0

1/ Pulsed (see 4.5.1).

2. APPLICABLE DOCUMENTS

2.1 Government documents.

2.1.1 Specifications, standards, and handbooks. The following specifications, standards, and handbooks form a part of this document to the extent specified herein. Unless otherwise specified, the issues of these documents are those listed in the issue of the Department of Defense Index of Specifications and Standards (DODISS) and supplement thereto, cited in the solicitation.

SPECIFICATION

MILITARY

MIL-S-19500 - Semiconductor Devices, General Specification for.

STANDARD

MILITARY

MIL-STD-750 - Test Methods for Semiconductor Devices.

(Unless otherwise indicated, copies of federal and military specifications, standards, and handbooks are available from the Standardization Document Order Desk, Building 4D, 700 Robbins Avenue, Philadelphia, PA 19111-5094.)

2.2 Order of precedence. In the event of a conflict between the text of this document and the references cited herein, the text of this document takes precedence. Nothing in this document, however, supersedes applicable laws and regulations unless a specific exemption has been obtained.

3. REQUIREMENTS

3.1 Associated detail specification. The individual item requirements shall be in accordance with MIL-S-19500, and as specified herein.

Source: https://assist.dla.mil -- Downloaded: 2016-12-04T21:33Z
Check the source to verify that this is the current version before use.

3.2 Abbreviations, symbols, and definitions. Abbreviations, symbols, and definitions used herein shall be as specified in MIL-S-19500.

E_{AS} - Single pulse avalanche energy capability

I_{AS} - Rated avalanche current, nonrepetitive

$V_{(ISO)}$ - Source pin to case isolation voltage

3.3 Design, construction, and physical dimensions. The design, construction, and physical dimensions shall be as specified in MIL-S-19500, and on figure 1.

3.3.1 Lead material and finish. Lead material shall be Kovar or Alloy 52; a copper core or plated core is permitted. Lead finish shall be solderable in accordance with MIL-S-19500 and herein. Where a choice of lead material or finish is desired, it shall be specified in the contract or purchase order (see 6.3).

3.3.2 Internal construction. Multiple chip construction is not be permitted to meet the requirements of this specification.

3.4 Marking. Marking shall be in accordance with MIL-S-19500.

3.5 Electrostatic discharge protection. The devices covered by this specification require electrostatic discharge protection (see 6.2).

3.5.1 Handling. MOS devices must be handled with certain precautions to avoid damage due to the accumulation of static charge. However, the following handling practices are recommended (see 3.5).

a. Devices should be handled on benches with conductive handling devices.

b. Ground test equipment, tools, and personnel handling devices.

c. Do not handle devices by the leads.

d. Store devices in conductive foam or carriers.

e. Avoid use of plastic, rubber, or silk in MOS areas.

f. Maintain relative humidity above 50 percent if practical.

g. Care should be exercised during test and troubleshooting to apply not more than maximum rated voltage to any lead.

h. Gate must be terminated to source, R ≤ 100 k, whenever bias voltage is to be applied drain to source.

4. QUALITY ASSURANCE PROVISIONS

4.1 Sampling and inspection. Sampling and inspection shall be in accordance with MIL-S-19500, and as specified herein.

4.2 Qualification inspection. Qualification inspection shall be in accordance with MIL-S-19500, and as specified herein. Alternate flow is allowed for qualification inspection in accordance with figure 2 of MIL-S-19500.

4.2.1 Group E inspection. Group E inspection shall be conducted in accordance with MIL-S-19500, and table IV herein.

Source: https://assist.dla.mil -- Downloaded: 2016-12-04T21:33Z
Check the source to verify that this is the current version before use.

4.3 Screening (JANTXV, and JANS levels only). Screening shall be in accordance with MIL-S-19500 (table II), and as specified herein. The following measurements shall be made in accordance with table I herein. Devices that exceed the limits of table I herein shall not be acceptable.

Screen (see table II of MIL-S-19500)	Measurement	
	JANS level	JANTXV-levels
1/	E_{AS} test (see 4.5.4)	E_{AS} test (see 4.5.4)
1/	Method 3161 (see 4.5.3)	Method 3161 (see 4.5.3)
1/	Gate stress test (see 4.5.5)	Gate stress test (see 4.5.5)
1/	Subgroup 2 of table I herein	Subgroup 2 of table I herein
9	I_{GSS}, I_{DSS1}	Not applicable
10	MIL-STD-750, method 1042 test condition B	MIL-STD750, method 1042 test condition B
11	I_{GSSF1}, I_{GSSR1}, I_{DSS1}, $r_{DS(on)}$, $V_{GS(TH)}$ Subgroup 2 of table I herein ΔI_{GSSF1} = ±20 nA dc or ±100% of initial value, whichever is greater ΔI_{GSSR1} = ±20 nA dc or ±100% of initial value, whichever is greater ΔI_{DSS1} = ±10 µA dc or ±100% of initial value, whichever is greater	I_{GSSF1}, I_{GSSR1}, I_{DSS1}, $r_{DS(on)}$, $V_{GS(th)}$ Subgroup 2 of table I herein
12	MIL-STD-750, method 1042, test condition A	MIL-STD-750, method 1042, condition A
13	Subgroups 2 and 3 of table I herein ΔI_{GSSF1} = ±20 nA dc or ±100% of initial value, whichever is greater ΔI_{GSSR1} = ±20 nA dc or ±100% of initial value, whichever is greater ΔI_{DSS1} = ±10 µA dc or ±100% of initial value, whichever is greater $\Delta r_{DS(on)1}$ = ±20% of initial value $\Delta V_{GS(th)1}$ = ±20% of initial value	Subgroups 2 and 3 of table I herein ΔI_{GSSF1} = ±20nA dc or 100% of initial value, whichever is greater ΔI_{GSSR1} = ±20nA dc or 100% of initial value, whichever is greater ΔI_{DSS1} = ±10µA dc or 100% of initial value, whichever is greater $\Delta r_{DS(on)1}$ = ±20% of initial value $\Delta V_{GS(th)1}$ = ±20% of initial value

1/ Shall be performed anytime before screen 10.

Source: https://assist.dla.mil -- Downloaded: 2016-12-04T21:33Z
Check the source to verify that this is the current version before use.

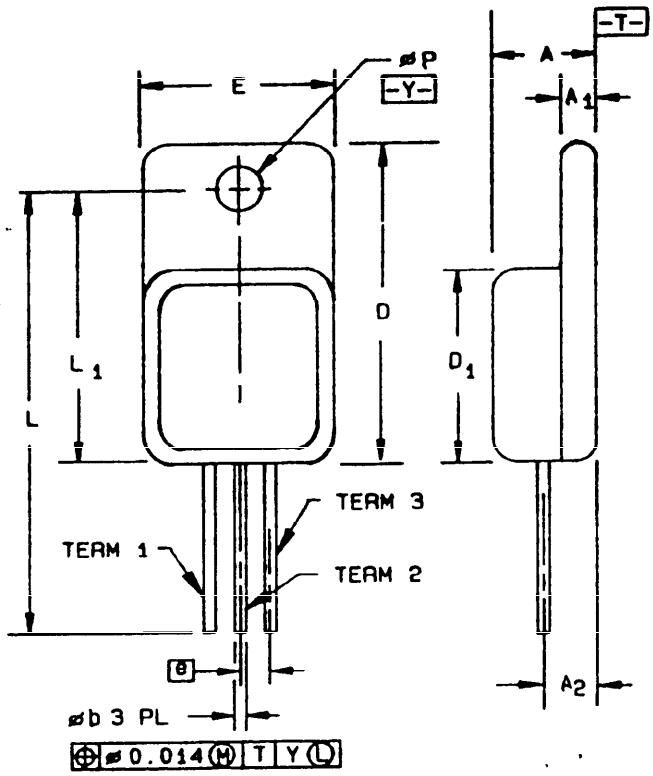

Symbol	AA	
	Min	Max
A	.249 (6.32)	.260 (6.60)
A_1	.040 (1.02)	.050 (1.27)
A_2	.150 BSC (3.81)	
D	.790 (20.07)	.800 (20.32)
D_1	.535 (13.59)	.545 (13.89)
e	.150 BSC (3.81)	
E	.535 (13.59)	.545 (13.89)
L	1.195 (13.59)	1.235 (13.89)
L_1	.665 (16.89)	.685 (17.40)
øp	.139 (1.53)	.149 (3.78)
øb	.035 (0.89)	.045 (1.14)
Term 1	Drain	
Term 2	Source	
Term 3	Gate	

NOTES:
1. Dimensions are in inches.
2. Metric equivalents are given for general information only.
3. Metric equivalents are in parentheses.
4. Refer to applicable symbol list.
5. Dimensioning and tolerancing are in accordance with ANSI Y14.5M.
6. Glass meniscus included in dimensions D and E.

FIGURE 1. Physical dimensions for TO-254AA.

Source: https://assist.dla.mil -- Downloaded: 2016-12-04T21:33Z
Check the source to verify that this is the current version before use.

4.4 Quality conformance inspection. Quality conformance inspection shall be in accordance with MIL-S-19500, and as specified herein. Alternate flow is allowed for quality conformance inspection in accordance with figure 2 of MIL-S-19500.

4.4.1 Group A inspection. Group A inspection shall be conducted in accordance with MIL-S-19500 and table I herein. (End-point electrical measurements shall be in accordance with the applicable steps of table VI herein.)

4.4.2 Group B inspection. Group B inspection shall be conducted in accordance with the conditions specified for subgroup testing in table IVa (JANS) and table IVb (JANTX and JANTXV) of MIL-S-19500, and table IIa and table IIb herein. Electrical measurements (end points) and delta requirements shall be in accordance with the applicable steps of table VI herein.

4.4.3 Group C inspection. Group C inspection shall be conducted in accordance with the conditions specified for subgroup testing in table V of MIL-S-19500, and table III herein. Electrical measurements (end points) and delta requirements shall be in accordance with the applicable steps of table VI herein.

4.4.4 Group D Inspection. Group D inspection shall be conducted in accordance with MIL-S-19500 and table IV herein.

4.5 Methods of inspection. Methods of inspection shall be as specified in the appropriate tables and as follows.

4.5.1 Pulse measurements. Conditions for pulse measurement shall be as specified in of MIL-STD-750.

4.5.2 Thermal resistance. Thermal resistance measurements shall be performed in accordance with method 3161 of MIL-STD-750. The maximum limit of $R_{\theta JC(max)}$ = 0.83°C/W. The following parameter measurements shall apply:

a. Measuring current (I_M) - - - - - - - - - - - - - - - 10 mA.

b. Drain heating current (I_H) - - - - - - - - - - - - - 4 A.

c. Heating time (t_H) - - - - - - - - - - - - - - - - - - Steady-state (see MIL-STD-750, method 3161 for definition).

d. Drain-source heating voltage (V_H) - - - - - - - - - 25 V.

e. Measurement time delay (t_{MD}) - - - - - - - - - - - 30 to 60 µs.

f. Sample window time (t_{SW}) - - - - - - - - - - - - - - 10 µs maximum.

4.5.3 Thermal response (ΔV_{SD} measurement). The delta V_{SD} measurement shall be performed in accordance with method 3161 of MIL-STD-750. The delta V_{SD} conditions (I_H and V_H) and maximum limit shall be derived by each vendor from the thermal response curves (see figure 2) and shall be specified in the certificate of conformance prior to qualification. The following parameter measurements shall apply:

a. Measuring current (I_M) - - - - - - - - - - - - - - - 10 mA.

b. Drain heating current (I_H) - - - - - - - - - - - - - 4 A minimum.

c. Heating time (t_H) - - - - - - - - - - - - - - - - - - 100 ms.

d. Drain-source heating voltage (V_H) - - - - - - - - - 25 V.

e. Measurement time delay (t_{MD}) - - - - - - - - - - - 30 to 60 µs.

f. Sample window time (t_{SW}) - - - - - - - - - - - - - - 10 µs maximum.

Source: https://assist.dla.mil -- Downloaded: 2016-12-04T21:33Z
Check the source to verify that this is the current version before use.

TABLE I. Group A inspection.

Inspection 1/	MIL-STD-750		Symbol	Limits		Unit
	Method	Conditions		Min	Max	
Subgroup 1						
Visual and mechanical inspection	2071					
Subgroup 2						
Breakdown voltage, drain to source	3407	V_{GS} = 0 V; I_D = 1 mA dc Bias condition C	$V_{(BR)DSS}$			
2N7268				100		V dc
2N7269				200		V dc
2N7270				500		V dc
Gate to source voltage (threshold)	3403	$V_{DS} \geq V_{GS}$ I_D = 1 mA dc	$V_{GS(TH)1}$	2.0	4.0	V dc
Gate current	3411	V_{GS} = +20 and -20 V dc Bias condition C, V_{DS} = 0	I_{GSS1}		±100	nA dc
Drain current	3413	V_{GS} = 0 V dc Bias condition C V_{DS} = 80% of rated V_{DS}	I_{DSS1}		50	µA dc
Static drain to source "ON"-state resistance	3421	V_{GS} = 12 V dc, condition A Pulsed (see 4.5.1), $I_D = I_{D2}$	$r_{DS(on)1}$			
2N7268					0.070	ohm
2N7269					0.115	ohm
2N7270					0.510	ohm
Static drain to source "ON"-state resistance	3421	V_{GS} = 12 V dc, condition A Pulsed (see 4.5.1), $I_D = I_{D1}$	$r_{DS(on)2}$			
2N7268					0.081	ohm
2N7269					0.125	ohm
2N7270					0.570	ohm
Forward voltage	4011	Pulsed (see 4.5.1), $I_D = I_{D1}$ V_{GS} = 0 V dc	V_{SD}			
2N7268					1.9	V
2N7269					1.9	V
2N7270					1.6	V

See footnote at end of table.

Source: https://assist.dla.mil -- Downloaded: 2016-12-04T21:33Z
Check the source to verify that this is the current version before use.

TABLE I. Group A inspection - Continued.

Inspection 1/	MIL-STD-750		Symbol	Limits		Unit
	Method	Conditions		Min	Max	
Subgroup 3						
High temperature operation		$T_C = T_J = +125°C$				
Gate current	3411	V_{GS} = +20 and -20 V dc Bias condition C, $V_{DS} = 0$	I_{GSS2}		±200	nA dc
Drain current	3413	V_{GS} = 0 V dc Bias condition C V_{DS} = 100% of rated V_{DS}	I_{DSS2}		1.0	mA dc
		V_{DS} = 80% of rated V_{DS}	I_{DSS3}		0.25	mA dc
Static drain to source "ON"-state resistance	3421	V_{GS} = 12 V dc Pulsed (see 4.5.1), $I_D = I_{D2}$	$r_{DS(on)3}$			
2N7268					0.132	ohm
2N7269					0.230	ohm
2N7270					1.260	ohm
Gate to source voltage (threshold)	3403	$V_{DS} \geq V_{GS}$, I_D = 1 mA dc	$V_{GS(TH)2}$	1.0		V dc
Low temperature operation		$T_C = T_J = -55°C$				
Gate to source voltage (threshold)	3403	$V_{DS} \geq V_{GS}$, I_D = 1 mA dc	$V_{GS(TH)3}$		5.0	V dc
Subgroup 4						
Forward Transconductance	3475	I_D = rated I_{D2}, V_{DD} = 15 V (See 4.5.1)	g_{FS}			
2N7268				8.0		S
2N7269				8.0		S
2N7270				4.0		S
Switching time test	3472	$I_D = I_{D1}$, V_{GS} = 12 V dc R_G = 2.35Ω, V_{DD} = 50% of rated V_{DS}				

See footnote at end of table.

Source: https://assist.dla.mil -- Downloaded: 2016-12-04T21:33Z
Check the source to verify that this is the current version before use.

TABLE I. Group A inspection - Continued.

Inspection 1/	MIL-STD-750		Symbol	Limits		Unit
	Method	Conditions		Min	Max	
Subgroup 4 - Cont'd.						
Turn-on delay time			$t_{D(ON)}$			
2N7268					45	ns
2N7269					33	ns
2N7270					45	ns
Rise time			t_R			
2N7268					190	ns
2N7269					140	ns
2N7270					190	ns
Turn off delay time			$t_{D(OFF)}$			
2N7268					170	ns
2N7269					140	ns
2N7270					190	ns
Fall time			t_F			
2N7268					130	ns
2N7269					140	ns
2N7270					130	ns
Subgroup 5						
Safe operating area test (high voltage)	3474	See figure 3, 4, 5 t_p = 10 ms minimum V_{DS} = 80% of max rated V_{DS} ($V_{DS} \leq 200$)				
Electrical measurements		See table VI, steps 1, 2, 3, 4, 5, 6, and 7				
Subgroup 6						
Not applicable						
Subgroup 7						
Gate charge	3471	Condition B				
On-state gate charge			$Q_{G(ON)}$			
2N7268					160	nC
2N7269					170	nC
2N7270					150	nC

Source: https://assist.dla.mil -- Downloaded: 2016-12-04T21:33Z
Check the source to verify that this is the current version before use.

TABLE I. Group A inspection - Continued.

Inspection 1/	MIL-STD-750		Symbol	Limits		Unit
	Method	Conditions		Min	Max	
Subgroup 7 - Cont'd.						
Gate to source charge			Q_{GS}			
2N7268					35	nC
2N7269					30	nC
2N7270					30	nC
Gate to drain charge			Q_{GD}			
2N7268					65	nC
2N7269					60	nC
2N7270					75	nC
Reverse recovery time	3473	di/dt = 100 A/µs $V_{DD} \leq 30$ V, $I_D = I_{D1}$	t_{rr}			
2N7268					570	ns
2N7269					820	ns
2N7270					1100	ns

1/ For sampling plan, see MIL-S-19500.

Source: https://assist.dla.mil -- Downloaded: 2016-12-04T21:33Z
Check the source to verify that this is the current version before use.

TABLE IIa. Group B inspection for JANS device.

Inspection 1/	MIL-STD-750	
	Method	Conditions
Subgroup 1		
Physical dimensions	2066	See figure 1
Subgroup 2 2/		
Solderability	2026	
Resistance to solvents	1022	
Subgroup 3		
Thermal shock (temperature cycling)	1051	Test condition G, 100 cycles
Hermetic seal	1071	
Fine leak		
Gross leak		
Electrical measurements		See table VI, steps 1, 2, 3, 4, 5, 6, and 7
Decap internal design verification	2075	See 3.3.2
SEM 3/	2077	
Bond strength	2037	Test condition A, all internal wires for each device shall be pulled separately.
Die shear	2017	
Subgroup 4		
Intermittent operation life	1042	Condition D, 2,000 cycles. No heat sink nor forced-air cooling on the device shall be permitted during the on cycle. t_{on} = 30 seconds minimum
Electrical measurements		See table VI, steps 1, 2, 3, 4, 5, 6, 7, and 8

Source: https://assist.dla.mil -- Downloaded: 2016-12-04T21:33Z
Check the source to verify that this is the current version before use.

TABLE IIa. Group B inspection for JANS device - Continued.

Inspection 1/	MIL-STD-750	
	Method	Conditions
Subgroup 5		
Accelerated steady-state reverse bias	1042	Condition A, V_{DS} = rated; T_A = +175°C; t = 120 hours. Read and record $V_{BR(DSS)}$ (pre and post) at I_D = 1 mA. Read and record I_{DSS} (pre and post), in accordance with table VI.
Electrical measurements		See table VI herein, steps 1, 2, 3, 4, 5, 6, and 7. No more than 15% of the sample shall be permitted to have a $\Delta V_{BR(DSS)}$ shift of more than 10% and ΔI_{DSS} greater than 50 µA.
Accelerated steady state gate stress	1042	Condition B, V_{GS} = rated; T_A = +175°C t = 24 hours
Electrical measurements		See table VI herein, steps 1, 2, 3, 4, 5, 6, and 7
Bond strength (Al-Au die interconnects only)	2037	Test condition A
Subgroup 6		
Thermal impedance	3161	See 4.5.2

1/ For sampling plan, see MIL-S-19500.
2/ A separate sample may be used for each test.
3/ SEM qualification may be performed anytime prior to lot formation.

Source: https://assist.dla.mil -- Downloaded: 2016-12-04T21:33Z
Check the source to verify that this is the current version before use.

TABLE IIb. Group B inspection for JANTXV.

Inspection 1/	MIL-STD-750	
	Method	Conditions
Subgroup 1		
Solderability	2026	
Resistance to solvents	1022	
Subgroup 2		
Thermal shock (temperature cycling)	1051	Test condition G, 25 cycles
Hermetic seal	1071	
Fine leak Gross leak		
Electrical measurements		See table VI, steps 1, 2, 3, 4, 5, 6, and 7
Subgroup 3		
Intermittent operation life (LTPD)	1042	Test condition D, 2,000 cycles; a cycle shall be 30 seconds minimum.
Electrical measurements		See table VI, steps 1, 2, 3, 4, 5, 6, 7, and 8
Subgroup 4		
Decap internal visual (design verification)	2075	See 3.3.2
Bond strength	2037	Test condition A; all internal bond wires for each device shall be pulled separately.
Subgroup 5		
Not applicable		
Subgroup 6		
Not applicable		

1/ For sampling plan, see MIL-S-19500.

Source: https://assist.dla.mil -- Downloaded: 2016-12-04T21:33Z
Check the source to verify that this is the current version before use.

TABLE III. Group C inspection (all quality levels).

Inspection 1/	MIL-STD-750	
	Method	Conditions
Subgroup 1		
Physical dimensions	2066	See figure 1
Subgroup 2		
Thermal shock (glass strain)	1056	Condition B
Terminal strength (tension)	2036	Test condition A, weight = 10 pounds; t = 15 s
Hermetic seal	1071	
Fine leak		
Gross leak		
Moisture resistance	1021	Omit initial conditioning
Electrical measurements		See table VI, steps 1, 2, 3, 4, 5, 6, and 7
Subgroup 3		
Shock	2016	
Vibration variable frequency	2056	
Constant acceleration	2006	
Electrical measurements		See table VI, steps 1, 2, 3, 4, 5, 6, and 7
Subgroup 4		
Salt atmosphere (corrosion)	1041	
Subgroup 5		
Barometer pressure test not required for $V_{DS} \leq 200$ V	1001	Test condition C
2N7270		V_{DS} = 500 V ; $I_{(ISO)}$ < 0.25 mA
Subgroup 6		
Intermittent operation life	1042	Test condition D, 6,000 cycles. A cycle shall be 30 seconds minimum.
Electrical measurements		See table VI, steps 1, 2, 3, 4, 5, 6, and 7

1/ For sampling plan, see MIL-S-19500.

Source: https://assist.dla.mil -- Downloaded: 2016-12-04T21:33Z
Check the source to verify that this is the current version before use.

TABLE IV. Group D inspection.

Inspection 1/ 4/	MIL-STD-750		Symbol	Pre irradiation limits				Post irradiation limits				Unit
	Method	Conditions		M, D, and R		H		M, D, and R		H		
				Min	Max	Min	Max	Min	Max	Min	Max	
Subgroup 1												
N/A												
Subgroup 2		T_C = +25°C										
Steady state total dose irradiation (V_{GS} bias) 2/	1019	V_{GS} = 12 V V_{DS} = 0										
Steady state total dose irradiation (V_{DS} bias) 2/	1019	V_{GS} = 0 V_{DS} = 80% of rated VDS (pre-irradiation)										
End-point electricals												
Breakdown voltage, drain to source	3407	V_{GS} = 0; I_D = 1 mA bias cond. C	V_{BRDSS}									
2N7268				100		100		100		80		V dc
2N7269				200		200		200		160		V dc
2N7270				500		500		500		400		V dc
Gate to source 3/ voltage (threshold)	3403	$V_{DS} \geq V_{GS}$ I_D = 1 mA	V_{GSth}									
2N7268				2	4	2	4	2	4	1.25	4.50	V dc
2N7269				2	4	2	4	2	4	1.25	4.50	V dc
2N7270				2	4	2	4	2	4	1.25	4.50	V dc
Gate current	3411	V_{GS} = 20 V V_{DS} = 0 Bias cond. C	I_{GSSF1}		100		100		100		100	nA dc
Gate current	3411	V_{GS} =-20 V V_{DS} = 0 Bias cond. C	I_{GSSR1}		-100		-100		-100		-100	nA dc

See footnotes at end of table.

Source: https://assist.dla.mil -- Downloaded: 2016-12-04T21:33Z
Check the source to verify that this is the current version before use.

TABLE IV. Group D inspection - Continued.

Inspection 1/ 4/	MIL-STD-750		Symbol	Pre irradiation limits				Post irradiation limits				Unit
	Method	Conditions		M, D, and R		H		M, D, and R		H		
				Min	Max	Min	Max	Min	Max	Min	Max	
Subgroup 2 - Cont'd.												
Drain current	3413	V_{GS} = 0 Bias cond. C V_{DS} = 80% of rated V_{DS} (pre-irradiation)	I_{DSS}									
2N7268					50		50		50		100	µA dc
2N7269					50		50		50		100	µA dc
2N7270					50		50		50		100	µA dc
Static drain to source on-state resistance	3421	V_{GS} = 12 V Cond. A pulsed see 4.5.1 $I_D = I_{D2}$	r_{DSon1}									
2N7268					0.070		0.070		0.070		0.090	Ω
2N7269					0.115		0.115		0.115		0.155	Ω
2N7270					0.510		0.510		0.510		0.685	Ω
Forward voltage source drain diode	4011	V_{GS} = 0 V $I_D = I_{D1}$	V_{SD}									
2N7268					1.9		1.9		1.9		1.9	V
2N7269					1.9		1.9		1.9		1.9	V
2N7270					1.6		1.6		1.6		1.6	V

1/ For sampling plan see MIL-S-19500.
2/ Seperate samples shall be pulled for each bias.
3/ H must meet end points for 300 k and 1000 k RAD (Si).
4/ Group D qualification may be performed anytime prior to lot formation. Wafers qualified to these group D QCI requirements may be used for any other detail specification utilizing the same die design.

Source: https://assist.dla.mil -- Downloaded: 2016-12-04T21:33Z
Check the source to verify that this is the current version before use.

TABLE V. Group E inspection (all quality levels) for qualification only.

Inspection	MIL-STD-750		Qualification and large lot quality conformance inspection
	Method	Conditions	
Subgroup 1			12 devices c = 0
Thermal shock (temperature cycling)	1051	-55°C to +150°C, 500 cycles	
Hermetic seal	1071		
Fine leak			
Gross leak			
Electrical measurements		See table VI, steps 1, 2, 3, 4, 5, 6, and 7	
Subgroup 2 1/			12 devices c = 0
Steady-state reverse bias	1042	Condition A: 1,000 hours	
Electrical measurements		See table VI, steps 1, 2, 3, 4, 5, 6, and 7	
Steady-state gate bias	1042	Condition B: 1,000 hours	
Electrical measurements		See table VI, steps 1, 2, 3, 4, 5, 6, and 7	
Subgroup 3			
Not applicable			
Subgroup 4			12 devices c = 0
Thermal resistance	3161	$R_{\theta JC}$ = 0.83 °C/W maximum. See 4.5.2	

1/ A separate sample for each test shall be pulled.

Source: https://assist.dla.mil -- Downloaded: 2016-12-04T21:33Z
Check the source to verify that this is the current version before use.

TABLE VI. Group A, B, C, and E electrical measurements.

Step	Inspection	MIL-STD-750		Symbol	Limits		Unit
		Method	Conditions		Min	Max	
1.	Breakdown voltage drain to source	3407	V_{GS} = 0 V; I_D = 1 mA dc Bias condition C	$V_{(BR)DSS}$			
	2N7268				100		V dc
	2N7269				200		V dc
	2N7270				500		V dc
2.	Gate to source voltage (threshold)	3403	$V_{DS} \geq V_{GS}$; I_D = 1 mA dc	$V_{GS(TH)1}$	2.0	4.0	V dc
3.	Gate current	3411	V_{GS} = +20 and -20 V dc V_{DS} = 0 V Bias condition C	I_{GGS1}		±100	nA dc
4.	Drain current	3413	V_{GS} = 0 V dc Bias condition C V_{DS} = 80% of rated V_{DS}	I_{DSS1}		50	µA dc
5.	Static drain to source "ON"-state resistance	3421	V_{GS} = 12 V dc; condition A Pulsed (see 4.5.1) $I_D = I_{D2}$	$r_{DS(ON)1}$			
	2N7268					0.070	ohm
	2N7269					0.110	ohm
	2N7270					0.510	ohm
6.	Static drain to source "ON"-state resistance	3421	V_{GS} = 12 V dc; condition A Pulsed (see 4.5.1) $I_D = I_{D1}$	$r_{DS(ON)2}$			
	2N7268					0.081	ohm
	2N7269					0.125	ohm
	2N7270					0.570	ohm
7.	Forward voltage (source drain diode)	4011	Pulsed (see 4.5.1) V_{GS} = 0 V dc $I_D = I_{D1}$	V_{SD}			
	2N7268					1.9	V
	2N7269					1.9	V
	2N7270					1.6	V
8.	Thermal response	3161	See 4.5.3	ΔV_{SD}			

Source: https://assist.dla.mil -- Downloaded: 2016-12-04T21:33Z
Check the source to verify that this is the current version before use.

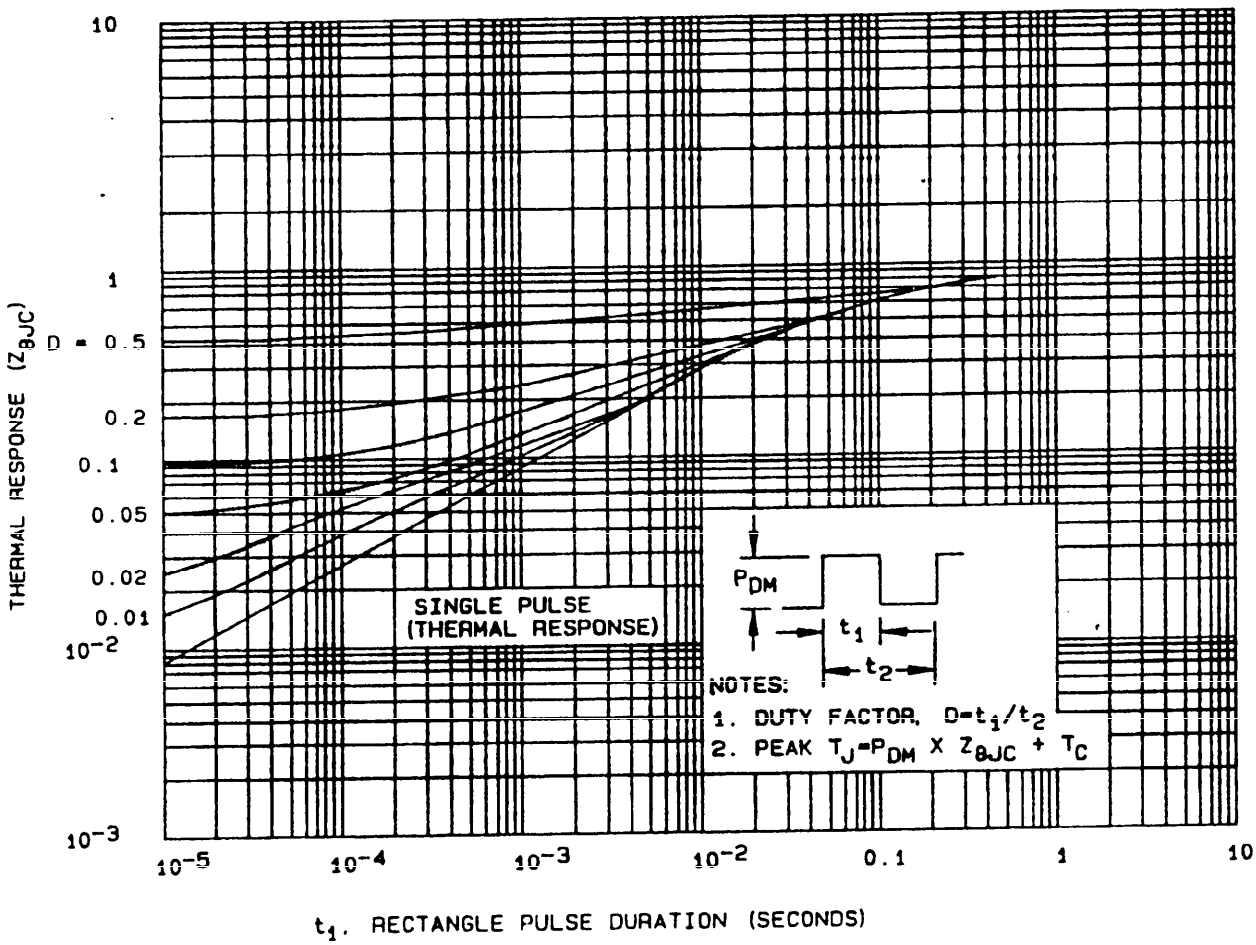

FIGURE 2. Thermal response curves.

Source: https://assist.dla.mil -- Downloaded: 2016-12-04T21:33Z
Check the source to verify that this is the current version before use.

2N7268

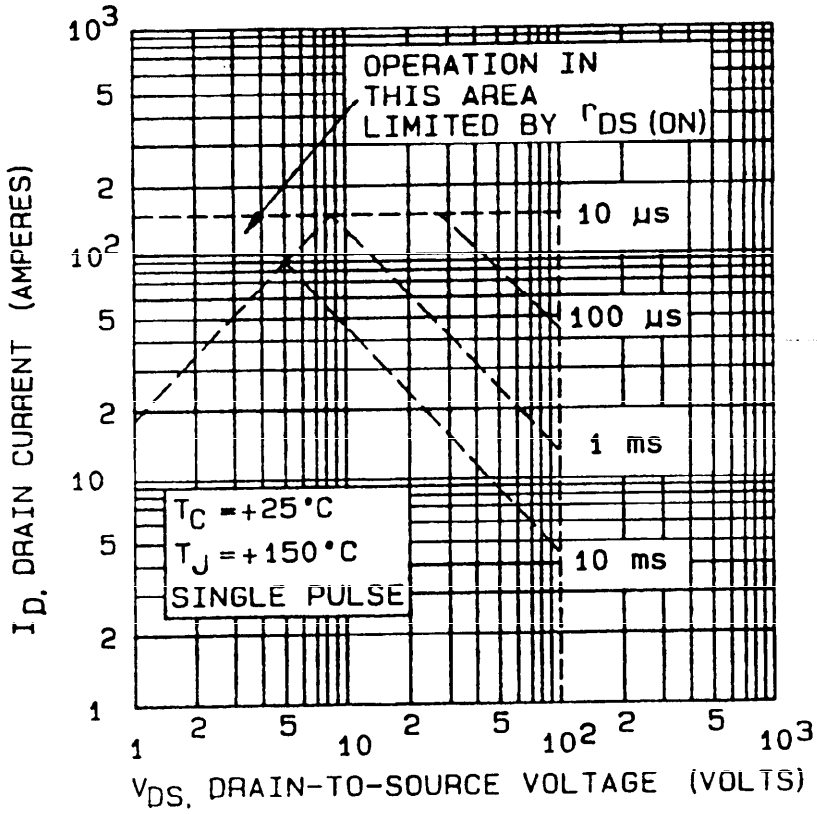

FIGURE 3. Safe operating area graph.

Source: https://assist.dla.mil -- Downloaded: 2016-12-04T21:33Z
Check the source to verify that this is the current version before use.

2N7269

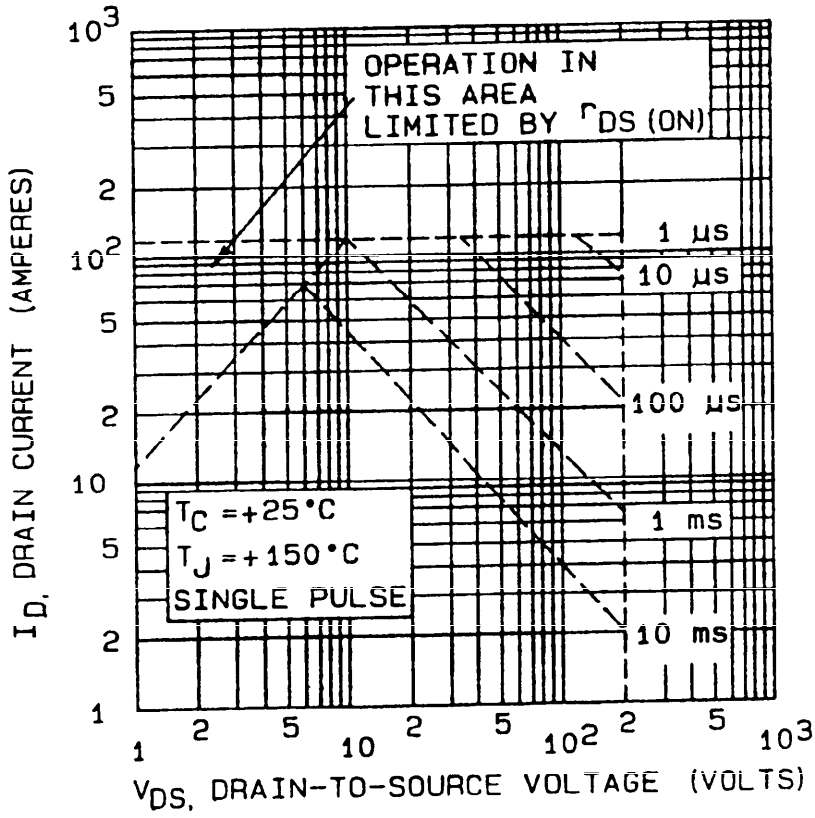

FIGURE 4. Safe operating area graph.

Source: https://assist.dla.mil -- Downloaded: 2016-12-04T21:33Z
Check the source to verify that this is the current version before use.

2N7270

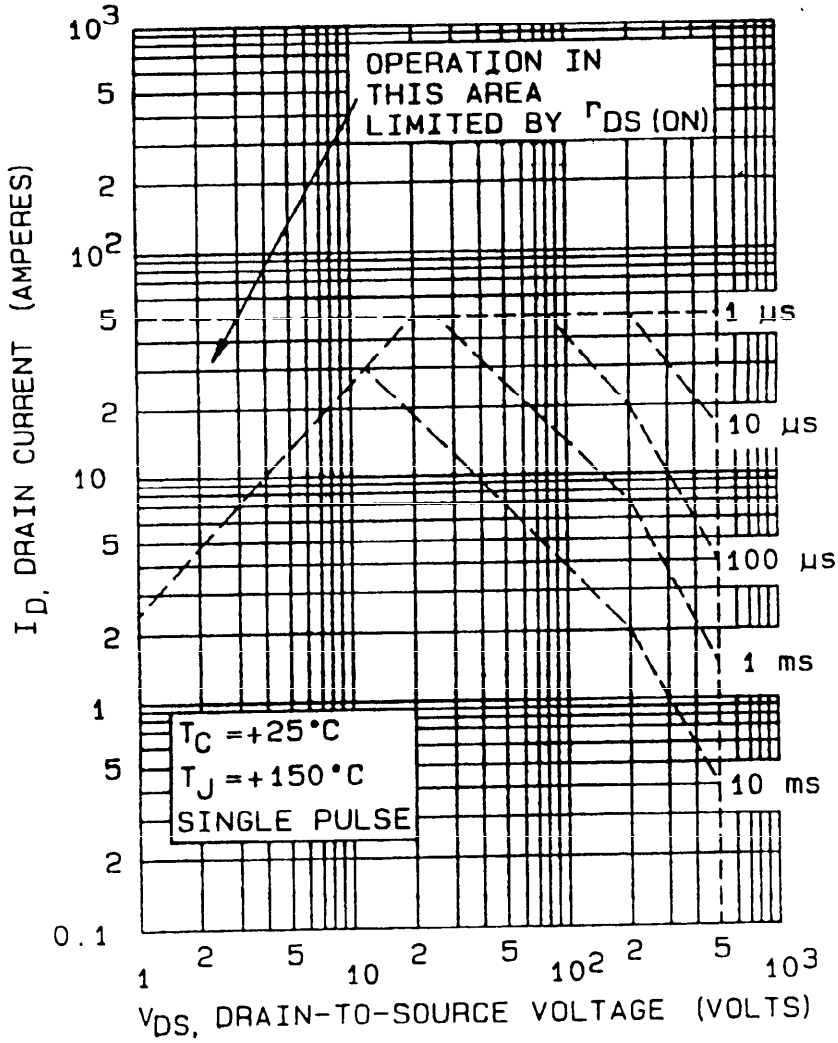

FIGURE 5. Safe operating area graph.

Source: https://assist.dla.mil -- Downloaded: 2016-12-04T21:33Z
Check the source to verify that this is the current version before use.

4.5.4 Single pulse avalanche energy (E_{AS}).

a. $I_{D1} = I_{AS(max.)}$

b. V_{DD} = 25 V dc for 2N7268, V_{DD} = 50 V dc for 2N7269 and 2N7270

c. $E_{AS} = E_{AS(max.)}$

d. Initial junction temperature = 25°C, -5°C, +10°C

e. $L = \frac{2E_{AS} \quad (V_{BR} - V_{DD})}{I_{AS}^2 \quad V_{BR}}$ minimum

4.5.5 Gate stress test.

a. V_{GS} = 24 V minimum.

b. t = 250 µs minimum.

5. PACKAGING

5.1 Packaging requirements. The requirements for packaging shall be in accordance with MIL-S-19500.

6. NOTES

(This section contains information of a general or explanatory nature that may be helpful, but is not mandatory.)

6.1 Notes. The notes specified in MIL-S-19500 are applicable to this specification.

6.2 Acquisition requirements. Acquisition documents must specify the following:

a. Title, number, and date of the specification.

b. Issue of DODISS to be cited in the solicitation and, if required, the specific issue of individual documents referenced (see 2.1).

c. Lead material and finish as specified (see 3.3.1).

d. Type designator and quality level.

6.3 Substitution information. Devices covered by this specification are substitutable for the manufacturer's and user's Part or Identifying Number (PIN). This information in no way implies that manufacturer's PIN's are suitable for the military PIN.

Preferred types	Commercial types
2N7268	IRHM7150 1/ IRHM8150
2N7269	IRHM7250 1/ IRHM8250
2N7270	IRHM7450 1/ IRHM8450

1/ IRHM7150, IRHM7250, IRHM7450 3 k, 10 k, 100 k RAD (Si)
IRHM8150, IRHM8250, IRHM8450 1000 k RAD (Si).

6.4 Ordering data. Acquisition documents may specify the material and finish (see 3.3.1).

Source: https://assist.dla.mil -- Downloaded: 2016-12-04T21:33Z
Check the source to verify that this is the current version before use.

CONCLUDING MATERIAL

Custodians:
Army - ER
Navy - EC
Air Force - 17
NASA - NA

Review activities:
Navy - TD
Air Force - 70, 80
DLA - ES

User activity:
Air Force - 19

Preparing activity:
NASA - NA

Agent:
DLA - ES

(Project 5961-1370)

Source: https://assist.dla.mil -- Downloaded: 2016-12-04T21:33Z
Check the source to verify that this is the current version before use.

STANDARDIZATION DOCUMENT IMPROVEMENT PROPOSAL

INSTRUCTIONS

1. The preparing activity must complete blocks 1, 2, 3, and 8 In block 1, both the document number and revision letter should be given.
2. The submitter of this form must complete blocks 4, 5, 6, and 7.
3. The preparing activity must provide a reply within 30 days from receipt of the form.

NOTE: This form may not be used to request copies of documents, nor to request waivers, or clarification of requirements on current contracts. Comments submitted on this form do not constitute or imply authorization to waive any portion of the referenced document(s) or to amend contractual requirements.

I RECOMMEND A CHANGE:	1. DOCUMENT NUMBER	2. DOCUMENT DATE (YYMMDD)
	MIL-S-19500/603	92-05-05

3. DOCUMENT TITLE Semiconductor Device, Field-Effect Transistor, N-Channel, Silicon Types, 2N7261 and 2N7262 JANTXVM, D, R, H and JANSM, D, R, H

4. NATURE OF CHANGE (Identify paragraph number and include proposed rewrite, if possible. Attach extra sheets as needed.)

5. REASON FOR RECOMMENDATION

6. SUBMITTER

a. NAME (Last, First, Middle Initial)	b. ORGANIZATION	
c. ADDRESS (Include Zip Code)	d. TELEPHONE (Include Area Code) (1) Commercial (2) AUTOVON (If applicable)	7. DATE SUBMITTED (YYMMDD)

8. PREPARING ACTIVITY

a. NAME	b. TELEPHONE (Include Area Code) (1) Commercial (2) AUTOVON
Jack J. Shaw	(301)731-8680
c. ADDRESS (Include Zip Code) Goddard Space Flight Center Code 310.A Greenbelt, MD 20771	IF YOU DO NOT RECEIVE A REPLY WITHIN 45 DAYS, CONTACT: Defense Quality and Standardization Office 5203 Leesburg Pike, Suite 1403, Falls Church, VA 22041-3466 Telephone (703) 756-2340 AUTOVON 289-2340

DD Form 1426, OCT 89 Previous editions are obsolete. *92.290

Source: https://assist.dla.mil -- Downloaded: 2016-12-04T21:33Z
Check the source to verify that this is the current version before use.