METRIC

MIL-STD-1678-3B
15 July 2013
SUPERSEDING
MIL-STD-1678-3A
19 June 2012

DEPARTMENT OF DEFENSE
STANDARD PRACTICE

# FIBER OPTIC CABLING SYSTEMS REQUIREMENTS AND MEASUREMENTS

## PHYSICAL, MECHANICAL, ENVIRONMENTAL AND MATERIAL MEASUREMENTS
(PART 3 OF 6 PARTS)

AMSC N/A

FSC 60GP

Source: https://assist.dla.mil -- Downloaded: 2016-12-31T21:01Z
Check the source to verify that this is the current version before use.

# FOREWORD

1. This Department of Defense Standard Practice is approved for use by the DLA Land and Maritime, Defense Logistics Agency, and is available for use by all Departments and Agencies of the Department of Defense.

2. Comments, suggestions or questions on this document should be addressed to DLA Land and Maritime, ATTN: VAT, Post Office Box 3990, Columbus, OH 43218-3990, or emailed to FiberOpticGroup@dla.mil. Since contact information can change, you may want to verify the currency of this address information using the ASSIST Online database at https://assist.dla.mil.

3. This standard practice provides detailed information and guidance to personnel concerned with ensuring standardization of fiber optic cable topologies (optical fiber cabling and associated components) on military mobile vehicles used in air, land and sea applications. In general, the requirements and methods specified herein are not identifiable to any specific mobile vehicle class or type, but are intended to standardize and minimize variations in requirements, test setups, test measurement procedures, test sample fabrication configurations and other aspects that must be addressed for completeness. Where specified, constrains for usage or platform types will be listed. The term “platform” will be used to refer to the military mobile vehicles in general or, where designated, one particular class (such as “aircraft platform”) or one particular type within that class (such as “F-35”).

4. In order to provide flexibility in the use and update of the different aspects for requirements and methods, this standard practice is issued in five parts; as follows:

   Part 1: Design, maintenance and installation requirements. This part addresses design requirements for platforms that use cable harnesses as the means to transport data through optical fiber among communication network and end user equipment. Larger platforms that route trunk cables through cableways and drop cables to the end user (application equipment), can cite applicable requirements in Part 1 of the Standard Practice and augment them with use of MIL-HDBK-2051 and MIL-STD-2042 as appropriate. Surface ships and submarines, are to use MIL-HDBK-2051 and MIL-STD-2042 in lieu of Part 1 of this Standard Practice.

   Part 2 Optical measurements. Part 2 of this standard addresses further details to refine or bound (constrain) the performance of each optical test measurement addressed. The test methods, such as those in a EIA/TIA-455 series standard or military standard/specification, are cited herein. This part of the standard practice augments the test method in the standard or specification to ensure consistency with setup and measurement procedure. This consistency minimizes variations when comparing data obtained from different test laboratories (including commercial, vendor, Government, and Government contractor).

   Part 3 Physical, mechanical environmental, and material measurements. Part 3 of this standard addresses further details to refine or bound (constrain) the performance of each physical, mechanical, environmental and material test measurement or inspection addressed. The test methods, such as those in a TIA-455 series standard or military standard/specification, are cited herein. This part of the standard practice augments the test method to ensure consistency with setup, measurement procedure, data recording/analysis and other factors critical to conducting or evaluating test performance. This consistency minimizes variations when comparing data obtained from different test laboratories (including commercial, vendor, Government, and Government contractor).

   Part 4 Test sample configuration and fabrication requirements. Part 4 of this standard addresses further details to refine or bound (constrain) the configuration and fabrication of test samples for the fiber optic components addressed. Fabrication methods, such as those in the Shipboard installation standard, MIL-STD-2042, or in the general series aircraft maintenance manual, NAVAIR 01-1A-505-4/T.O. 1-1A-14-4/TM 1-1500-323-24-4, are cited herein. This part of the standard practice augments the fabrication method to ensure consistency with use of the same components (such as cable types) and processes and augments the component specification to ensure consistency of the test sample configuration.



Source: https://assist.dla.mil -- Downloaded: 2016-12-31T21:01Z
Check the source to verify that this is the current version before use.

Part 5 Design phase and legacy measurements. Tests that are more unique to the design phase or tests and inspections that are not just primarily for qualification (supplemental measurements) are addressed in Part 5 of this standard practice. Also, legacy test methods and legacy criteria measurements are provided in this part of the standard practice with the recommended replacement method for the former (legacy) DOD-STD-1678 methods. These former DOD-STD-1678 test methods are listed under the constraint that they be used only with the specific military specifications or commercial standards in which they are cited. The intent is to delete each DOD-STD-1678 test method from that standard practice in Part 5 once its reference from military specification or commercial standard is removed.

Part 6 Parts and support equipment commonality and standardization requirements, cable harness configurations. This part of the Standard Practice addresses component part and support equipment standardization requirements for platforms that use cable harnesses as the means to transport data through optical fiber among communication network and end user equipment. Surface ships and submarines are to use the Navy Shipboard Fiber Optic Recommended Components Parts List (a copy may be found at web site: https://fiberoptics.nswc.navy.mil/) in lieu of part 6 of this Standard Practice. Likewise, larger platforms that route trunk cables through cableways and drop cables to the end user (application equipment), can cite applicable requirements in Part 6 of the Standard Practice, cite the Navy shipboard Fiber Optic Recommended Components Parts List, or both, as appropriate.



Source: https://assist.dla.mil -- Downloaded: 2016-12-31T21:01Z
Check the source to verify that this is the current version before use.

CONTENTS


| PARAGRAPH | | PAGE |
|---|---|---|
| 1. | SCOPE | 1 |
| 1.1 | Scope | 1 |
| 1.1.1 | Applicability | 1 |
| 1.2 | Intended uses for Part 3 | 1 |
| 1.2.1 | Primary uses of Part 3 | 1 |
| 1.2.2 | Supplemental use | 1 |
| 1.2.3 | Use for content | 1 |
| 1.2.4 | Constraints on use | 1 |
| 2. | APPLICABLE DOCUMENTS | 2 |
| 2.1 | General | 2 |
| 2.2 | Government documents | 2 |
| 2.2.1 | Other Government documents | 2 |
| 2.3 | Non-Government documents | 2 |
| 2.4 | Order of precedence | 2 |
| 3. | DEFINITIONS | 3 |
| 3.1 | General fiber optics terms | 3 |
| 3.2 | Acronyms | 3 |
| 3.3 | Qualification testing, general | 3 |
| 3.4 | Qualification testing, QPL process | 3 |
| 4. | GENERAL REQUIREMENTS | 4 |
| 4.1 | Environmental conditions | 4 |
| 4.2 | Vendor minimum inspection responsibilities | 4 |
| 4.3 | Test conditions | 4 |
| 4.3.1 | Test interruption | 4 |
| 4.3.2 | Environmental chamber test charts | 4 |
| 4.3.3 | Recording and verifying pass/fail criteria | 4 |
| 4.4 | Safety compliance while performing testing | 5 |
| 4.5 | Consensus for physical, mechanical, environmental, and material measurements | 5 |
| 4.6 | Groupings of tests | 6 |
| 4.6.1 | Physical group | 6 |
| 4.6.2 | Mechanical group | 6 |
| 4.6.3 | Environmental group | 6 |
| 4.6.4 | Material group | 6 |
| 4.7 | Inspection by attributes | 6 |
| 4.8 | Data sheets | 6 |




Source: https://assist.dla.mil -- Downloaded: 2016-12-31T21:01Z
Check the source to verify that this is the current version before use.

CONTENTS


| PARAGRAPH | | PAGE |
|---|---|---|
| 5. | DETAILED REQUIREMENTS | 7 |
| 5.1 | Physical measurements | 7 |
| 5.1.1 | Size | 7 |
| 5.1.2 | Weight | 7 |
| 5.1.3 | Workmanship | 7 |
| 5.1.4 | Markings | 7 |
| 5.1.5 | Visual and mechanical | 7 |
| 5.2 | Mechanical measurements | 7 |
| 5.2.1 | Vibration | 7 |
| 5.2.2 | Shock (mechanical) | 7 |
| 5.2.3 | Cable scraping resistance | 7 |
| 5.3 | Environmental measurements | 7 |
| 5.3.1 | Temperature cycling | 7 |
| 5.3.2 | Temperature-humidity cycling | 7 |
| 5.3.3 | Temperature life | 7 |
| 5.3.4 | Thermal shock | 7 |
| 5.3.5 | Altitude immersion | 7 |
| 5.3.6 | Weathering | 7 |
| 5.3.7 | Freezing water immersion | 7 |
| 5.3.8 | Electromagnetic effects | 7 |
| 5.4 | Material measurements | 7 |
| 5.4.1 | Fungus resistance | 7 |
| 5.4.2 | Salt spray | 7 |
| 5.4.3 | Modified $SO_2$/salt spray | 7 |
| 5.4.4 | Ozone exposure | 7 |
| 5.4.5 | Smoke generation and flame propagation | 8 |
| 5.4.6 | Flame extinguishing | 8 |
| 5.4.7 | Toxicity index | 8 |
| 5.4.8 | Shell-to-shell conductivity | 8 |
| 5.4.9 | Fluid immersion | 8 |
| 6. | NOTES | 9 |
| 6.1 | Intended use | 9 |
| 6.2 | Subject term (key word) listing | 9 |
| 6.3 | Changes from previous issue | 9 |
| 6.4 | Supersession data | 9 |




Source: https://assist.dla.mil -- Downloaded: 2016-12-31T21:01Z
Check the source to verify that this is the current version before use.

CONTENTS


| PARAGRAPH | | PAGE |
|---|---|---|
| REQUIREMENTS | | |
| Physical measurements | | |
| 3101 | Size | 11 |
| 3102 | Weight | 16 |
| 3103 | Workmanship | 18 |
| 3104 | Marking | 23 |
| 3105 | Visual and mechanical | 28 |
| Mechanical measurements | | |
| 3201.1 | Vibration | 36 |
| 3202.1 | Shock (Mechanical) | 58 |
| 3203 | Cable scraping resistance | 112 |
| Environmental measurements | | |
| 3301 | Temperature cycling | 120 |
| 3302 | Temperature-humidity cycling | 127 |
| 3303 | Temperature life (life aging) | 134 |
| 3304 | Thermal shock | 141 |
| 3305 | Altitude immersion | 149 |
| 3306 | Weathering | 156 |
| 3307 | Freezing water immersion | 160 |
| 3308.1 | Electromagnetic effects | 164 |
| Material measurements | | |
| 3401.1 | Fungus resistance | 195 |
| 3402.1 | Salt spray | 213 |
| 3403 | Modified $SO_2$/Salt spray | 218 |
| 3404 | Ozone exposure | 222 |
| 3405 | Smoke generation and flame propagation | 225 |
| 3406 | Flame extinguishing | 232 |
| 3407 | Toxicity index | 236 |
| 3408 | Shell to shell conductivity | 240 |
| 3409.1 | Fluid immersion | 248 |
| 3410 | Cable jacket tensile strength and elongation | 252 |




Source: https://assist.dla.mil -- Downloaded: 2016-12-31T21:01Z
Check the source to verify that this is the current version before use.

# 1. SCOPE

1.1 Scope. Part 3 of this standard practice provides further details to refine or bound (constrict) the performance of each physical, mechanical, environmental, and material test measurement addressed.

1.1.1 Applicability. The test methods, such as those in the TIA/EIA-455 series standard or military standard/specification, are cited already. This part of the standard practice augments the test methods in the TIA/EIA-455 series standard or military standard/specification to ensure consistency with setup and measurement procedure. This consistency minimizes variations when comparing data obtained from different test laboratories (including commercial, vendor, Government, and Government contractor). The rapidly changing state of the art in fiber optic technology makes it essential that some degree of flexibility be exercised in enforcing this document. When there is a conflict between this document and the platform specification or contract, the platform specification or contract will take precedence. Where obsolescence or other issues are such that the measurement requirements specified for the refinement or bound (constraint) herein cannot be implemented, users will submit a description of the issue along with a request for clarification or with proposal for redefining the requirement to consider for incorporation into this standard practice to: DLA Land and Maritime, ATTN: VAT, Post Office Box 3990, Columbus, OH 43218-3990, or emailed to FiberOpticGroup@dla.mil.

1.2 Intended uses for Part 3.

1.2.1 Primary uses of Part 3. Part 3 of this standard practice was prepared primarily for qualification functions performed by Government Personnel (including Government contractors acting on behalf of the Government) as specified in 1.2.1.1 through 1.2.1.3

1.2.1.1 Auditing. Use for performing audits of test laboratories doing testing for fiber optic cable topology (FOCT) components.

1.2.1.2 Test procedure review. Use to review physical, mechanical, environmental, and material test procedures for a FOCT component.

1.2.1.3 Test report review. Use to review the physical, mechanical, environmental, and material testing performance as part of a test report for a FOCT component.

1.2.2 Supplemental use. Part 3 of this standard practice is intended to identify to vendors and test laboratories the areas of emphasis for Government review for physical, mechanical, environmental, and material test measurements performed as part of a FOCT component qualification process.

1.2.3 Use for content. Each physical, mechanical, environmental, and material measurement augments the test methodology and performance requirements in a narrative format to the extent deemed necessary for that measurement. Checklists may be included that contain primary requirements in a table format. When a checklist is included, further clarification of the items in the table can be found in applicable physical, mechanical, environmental, or material measurement.

1.2.4 Constraints on use.

a. Commercial entities are expected to be familiar with the test standards cited by the Government for use. Part 3 of this standard practice does provide some guidance and clarifications for successful implementation within the test standards cited.

b. Part 3 of this standard practice is not intended to be used in lieu of a test laboratory developing physical, mechanical, environmental, and material test procedures specific to the fiber optic component military specification.



Source: https://assist.dla.mil -- Downloaded: 2016-12-31T21:01Z
Check the source to verify that this is the current version before use.

## 2. APPLICABLE DOCUMENTS

2.1 General. The documents listed in this section are specified in sections 3, 4, and 5 of this standard practice. This section does not include documents cited in other sections of this standard practice or recommended for additional information or as examples. While every effort has been made to ensure the completeness of this list, document users are cautioned that they must meet all specified requirements documents cited in sections 3, 4, and 5 of this standard practice, whether or not they are listed.

2.2 Government documents.

2.2.1 Specifications, standards, and handbooks. The following specifications, standards, and handbooks form a part of this document to the extent specified herein. Unless otherwise specified, the issues of these documents are those cited in the solicitation or contract.

DEPARTMENT OF DEFENSE STANDARDS

MIL-STD-1678-2 - Fiber Optic Cabling Systems Requirements and Measurements (Part 2: Optical Measurements).

(Copies of these documents are available online at http://quicksearch.dla.mil or from the Standardization Document Order Desk, 700 Robbins Avenue, Building 4D, Philadelphia, PA 19111-5094.)

2.2.2 Other Government documents, drawings, and publications. The following other Government documents, drawings, and publications form a part of this document to the extent specified herein. Unless otherwise specified, the issues of these documents are those cited in the solicitation or contract.

DEPARTMENT OF DEFENSE DRAWINGS

NAVAIR 01-1A-505-4/ T.O. 1-1A-14-4/ TM 1-1500-323-24-4 - Aircraft Fiber Optic Cabling, Technical Manual, Installation and Testing Practices.

(A copy of this document is available online at: https://jswag.navair.navy.mil. At the home page select “Document Library” (on left side), then select the “Committee” folder, then “JFOWG” followed by the “Maintenance Documents” folder. If unable to access this Web Site, request an application by e-mail to NSWC DD Warfare Systems Department at: (DLGR_NSWC_Foweb@navy.mil.)

2.3 Non-Government publications. The following documents form a part of this document to the extent specified herein. Unless otherwise specified, the issues of these documents are those cited in the solicitation or contract.

TELECOMMUNICATIONS INDUSTRY ASSOCIATION

TIA-440 - Fiber Optic Terminology.
TIA/EIA-455 - Standard Test Procedure for Fiber Optic Fibers, Cables, Transducers, Sensors, Connecting and Terminating Devices, and Other Fiber Optic Components.

(Copies are available online at www.tiaonline.org or from Telecommunications Industry Association (TIA), 2500 Wilson Boulevard, Suite 300, Arlington VA 22201.)

2.4 Order of precedence. Unless otherwise noted herein or in the contract, in the event of a conflict between the text of this document and the references cited herein, the text of this document takes precedence. Nothing in this document, however, supersedes applicable laws and regulations unless a specific exemption has been obtained.



Source: https://assist.dla.mil -- Downloaded: 2016-12-31T21:01Z
Check the source to verify that this is the current version before use.

3. DEFINITIONS.

3.1 General fiber optics terms. Definitions for general fiber optics terms used in this standard practice are in accordance with TIA-440. Definitions for other terms as they are used in this standard practice are given in the following paragraphs.

3.2 Acronyms. The following acronyms are used in this standard practice:

| | |
|---|---|
| DUT | Device under test |
| FOCT | Fiber optic cable topology |
| QPL | Qualified Products List |

3.3 Qualification testing, general. Formal testing designed to demonstrate that the software and hardware of a system meet specified requirements. Qualification testing may be accomplished at any time during the life of a system, such as during prototype development, manufacturing, shipment, storage, installation, and operation. Most often the qualification testing is conducted to determine the extent to which a system passes a specified set of performance criteria.

3.4 Qualification testing, QPL process. For purposes of this Standard Practice, qualification testing is refined and bounded to the term as used for Government Qualified Products List (QPL) testing or inspection. This testing is performed to determine if the FOCT (fiber optic cable topology) component or DUT (device under test) meets the requirements specified in the fiber optic component applicable military specification. Physical, optical, mechanical, environmental, and material testing is performed in specified test sequences. One parameter is tested at a time. Successful completion places the DUT onto the QPL for that FOCT component military specification. Other terminology is to be used in lieu of qualification for any prototype development, manufacturing, shipment, storage, installation, and operational testing.



Source: https://assist.dla.mil -- Downloaded: 2016-12-31T21:01Z
Check the source to verify that this is the current version before use.

4. GENERAL REQUIREMENTS

4.1 Environmental conditions. Test equipment to perform and instrumentation to measure the specified parameters for each physical, mechanical, environmental and material test must be placed in an area in which specified ambient temperature and humidity conditions are maintained. "Standard Ambient" conditions (23°C ±5°C/73°F ±9°F and 20 percent RH to 70 percent RH), in accordance with TIA/EIA-455, is acceptable if the test equipment is built to operate throughout that ambient temperature and humidity range and is within the specified accuracy. If not, then the "Controlled Ambient" conditions (23°C ±2°C/73°F ±4°F and 45 percent RH to 55 percent RH) are to be followed. For uncontrolled spaces, where local weather is normally within the "Standard Ambient" range (or the specified test equipment operating ambient conditions, whichever is more conservative), testing will be performed only when the acceptable conditions exist.

4.2 Vendor minimum inspection responsibilities. When the vendor has in house capabilities to perform group A inspections, the vendor is encouraged to do the initial qualification inspections that are also listed under group A inspections. When the initial qualification is done inside the vendor's facility, the vendor should submit the results of the qualification inspections equivalent to group A inspections to the outside test laboratory for inclusion as part of the initial qualification report.

4.3 Test conditions.

4.3.1 Test interruption.

4.3.1.1 Occurrence. Test interruption is considered to occur any time the test parameters fall outside of the ones specified. An example would be a temperature deviation exceeding ±2°C.

4.3.1.2 Corrective action. Once a test interruption occurs, the test sample shall be brought back to the unstressed condition at a controlled rate. The test shall then be continued from the point of repeating the last cycle prior to the interruption. For tests in which cycling is not performed, the test shall then be continued from the point of repeating the last action (as with the case of a mechanical test) or be continued from the point of repeating the last 12 hours (as with the case of an environmental soak type test). If collecting data during the test, start re-collecting data after repeating the last action or repeating the last 12 hours, as applicable.

4.3.2 Environmental chamber test charts.

4.3.2.1 Requirement. DLA Land and Maritime specifies detailed data requirements for some test methods. Test charts are required for tests performed in environmental chambers and contain recordings of the environmental conditions (such as temperature and humidity) inside the chamber. The test chart is to include the environmental chamber manufacturer, model, and serial number with the date of the recording.

4.3.2.2 Implementation. Objective evidence that test requirements were achieved whether it be circular chart, stored data on disk or by other means approved by the qualification activity. Any stored data must be retained and made available to the Government upon request.

4.3.3 Recording and verifying pass/fail criteria.

4.3.3.1 Proper test criteria must be specified. Pass/fail criteria must be stated in the test procedure and available to the operating personnel performing the test.

4.3.3.2 Proper test fail criteria must be implemented. Operating personnel performing the test are to be knowledgeable in what constitutes a failure. The test laboratory shall determine if the result of each performance requirement for a test is a pass or fail and record that determination on the data sheet. A description of any failure is to be noted on the data sheet or supplemental documentation. Corrective measures, within the scope of the test setup (such as cleaning and reseating), are to be taken to resolve a failure. The corrective measures taken in trying to resolve a failure shall be recorded. If subsequent measurements obtained remain outside of the performance requirements, it is designated a failure. Alternative terminology (such as discrepancy or deviation) is not to be used.



Source: https://assist.dla.mil -- Downloaded: 2016-12-31T21:01Z
Check the source to verify that this is the current version before use.

4.3.3.3 Government determination of marginal performance. Government personnel, upon review of test documentation and instrumentation specifications, may determine that data just outside of the performance requirement is marginal. Allowance for this determination is made when using specialized test equipment for a more unique measurement. This allowance is not applicable for test equipment used in most of the optical tests conducted.

4.4 Safety compliance while performing testing.

4.4.1 Fiber optic safety precautions. The fiber optic safety precautions listed in subordinate Work Package 004 01 of NAVAIR 01-1A-505-4/T.O. 1-1A-14-4/TM 1-1500-323-24-4 shall apply. Verify, at a minimum, that operating/test personnel are aware of 4.4.1a through 4.4.1m.

a. Keep all food and beverages out of the work area. If fiber particles are ingested they can cause internal injury.

b. Do not smoke while working with fiber optic systems.

c. Always wear safety glasses with side shields. Treat fiber optic splinters the same as glass splinters.

d. Never look directly into the end of fiber cables until you are positive that there is no light source at the other end. Use a fiber optic power meter to make certain the fiber is dark.

e. Do not touch the ends of the fiber, as they may be razor sharp. Rinse hands thoroughly under running water to rinse away any glass shards.

f. Contact wearers must not handle their lenses until they have thoroughly rinsed and then washed their hands.

g. In the event glass shards enter the eye or penetrate the skin seek medical attention immediately.

**CAUTION: Do not rub your eye. Only authorized medical personnel should attempt removal of glass shards from the eye. Do not attempt removal of glass from the eye yourself!**

h. Do not touch your eyes while working with fiber optic systems until your hands have been thoroughly cleaned.

i. Clean hands thoroughly first by rinsing hands under running water to rinse away any glass shards after handling and repairing fiber. Then wash normally. Wear protective gloves if at all possible.

j. Keep all combustible materials safely away from heat sources.

k. Ultraviolet (UV) safety glasses shall be worn when using the UV curing lamp.

l. Only work in well-ventilated areas.

m. Avoid skin contact with epoxies.

4.5 Consensus for physical, mechanical, environmental, and material measurements. Part 3 of this Standard Practice is a compilation of existing requirements previously released in the form of other documents. Consensus was obtained among various Government activities, responsible for specifying the performance of fiber optic cabling components and systems/networks, on the requirements documented herein. These same Government activities shall be the means to reach consensus on standardization of new/revised requirements, identify new requirements and new technologies that permit its rapid introduction, and provide those requirements to update Part 3 of this Standard Practice.



Source: https://assist.dla.mil -- Downloaded: 2016-12-31T21:01Z
Check the source to verify that this is the current version before use.

4.6 Groupings of tests. Measurements in Part 3 of this Standard Practice are placed into four groups (of "physical", "mechanical", "environmental", and "material"). Some measurements can be placed into more than one group or considered more appropriately apart of a different group not listed. For instance, vibration may be considered either environmentally induced or resulting from mechanical stress. With some liberties, the four groups are taken from the qualification inspection tables for fiber optic components. These groups are taken from the sequence of tests performed in each group for the majority of the fiber optic component military specifications. There are variations within each military specification.

4.6.1 Physical group. The physical group includes those visual, dimensional, and other inspections that can be done on piece parts (components) prior to test sample fabrication or assembly. The physical group measurements are found mainly in 3101, 3102, 3103, 3104 and 3105 inspections.

4.6.2 Mechanical group. The mechanical group includes measurements in which an external stress is induced using a test fixture. The mechanical group measurements are mainly found in 3201, 3202 and 3203 inspections.

4.6.3 Environmental group. The environmental group includes measurements in which temperature, humidity or both temperature and humidity induced stresses are applied within a cabinet or chamber (referred to herein as climatic type environmental measurements). The environmental group measurements are mainly found in 3301, 3302, 3303, 3304, 3305, 3306, 3307 and 3308 inspections.

4.6.4 Material group. The material includes measurements in which primarily the degree that a material property can withstand an environment or stress is usually applied within a vessel or chamber (also referred to as material assessment type environmental conditions). These material type measurements are mainly found in 3401, 3402, 3403, 3304, 3405, 3406, 3407, 3408, 3409 and 3410 inspections. Due to measuring the ability to withstand a specific environment, the majority of these type measurements could be grouped under environmental rather than a separate material group.

4.7 Inspection by attributes. The random sampling alternative and inspection by attributes are applicable for the specified conformance inspections only. For qualification and for initial validation of the process, inspection shall be performed on 100 percent of samples with data supplied. Data includes a value and unit of measure for each measurement required on each sample. Inspection by attributes is an assessment in which each sample is measured then rated as conforming or nonconforming with respect to a given specification requirement or set of requirements (no measurement data provided).

4.8 Data sheets. Measurement data shall be provided in the form on data sheets. Data sheets shall conform to the items for the standard data sheet listed in MIL-STD-1678-2 Measurement 2201. In addition, the data sheet shall list the items specified for each measurement. Sample data sheets are illustrated for some measurements in Part 3 of this Standard Practice. The illustrations do not include the items for the standard data sheet listed in MIL-STD-1678-2 Measurement 2201. The items on the standard data sheet may be listed on each data sheet prepared, or as an alternative, may be listed on a separate data cover sheet.



Source: https://assist.dla.mil -- Downloaded: 2016-12-31T21:01Z
Check the source to verify that this is the current version before use.

5. DETAILED REQUIREMENTS

5.1 Physical measurements. Measurements shall be implemented as specified in 5.1.1 through 5.1.5.

5.1.1 Size. Measurements shall be performed to measurement 3101.

5.1.2 Weight. Measurements shall be performed to measurement 3102.

5.1.3 Workmanship. Measurements shall be performed to measurement 3103.

5.1.4 Markings. Measurements shall be performed to measurement 3104.

5.1.5 Visual and mechanical. Measurements shall be performed to measurement 3105.

5.2 Mechanical measurements. Support processes for measurements shall be implemented as specified in 5.2.1 through 5.2.3.

5.2.1 Vibration. Measurements shall be performed to measurement 3201.

5.2.2 Shock (mechanical). Measurements shall be performed to measurement 3202.

5.2.3 Cable scraping resistance. Measurements shall be performed to measurement 3203.

5.3 Environmental measurements. Environmental measurements that include those that apply stress types such as temperature, humidity, or both temperature and humidity inside a cabinet or chamber (grouped as climatic and similar type measurements) shall be implemented as specified in 5.3.1 through 5.3.8.

5.3.1 Temperature cycling. Measurements shall be performed to measurement 3301.

5.3.2 Temperature-humidity cycling. Measurements shall be performed to measurement 3302.

5.3.3 Temperature life. Measurements shall be performed to measurement 3303.

5.3.4 Thermal shock. Measurements shall be performed to measurement 3304.

5.3.5 Altitude immersion. Measurements shall be performed to measurement 3305.

5.3.6 Weathering. Measurements shall be performed to measurement 3306.

5.3.7 Freezing water immersion. Measurements shall be performed to measurement 3307.

5.3.8 Electromagnetic effects. Measurements shall be performed to measurement 3308.

5.4 Material measurements. Material measurements that include those in which a material property can withstand a specified degree of environment or stress usually applied within a vessel or chamber shall be implemented as specified in 5.4.1 through 5.4.10.

5.4.1 Fungus resistance. Measurements shall be performed to measurement 3401.

5.4.2 Salt spray. Measurements shall be performed to measurement 3402.

5.4.3 Modified $SO_2$/salt spray. Measurements shall be performed to measurement 3403.

5.4.4 Ozone exposure. Measurements shall be performed to measurement 3404.



Source: https://assist.dla.mil -- Downloaded: 2016-12-31T21:01Z
Check the source to verify that this is the current version before use.

5.4.5 Smoke generation and flame propagation. Measurements shall be performed to measurement 3405.

5.4.6 Flame extinguishing. Measurements shall be performed to measurement 3406.

5.4.7 Toxicity index. Measurements shall be performed to measurement 3407.

5.4.8 Shell-to-shell conductivity. Measurements shall be performed to measurement 3408.

5.4.9 Fluid immersion. Measurements shall be performed to measurement 3409.

5.4.10 Cable jacket tensile strength and elongation. Measurements shall be performed to measurement 3410.



Source: https://assist.dla.mil -- Downloaded: 2016-12-31T21:01Z
Check the source to verify that this is the current version before use.

6. NOTES.

(This section contains information of a general or explanatory nature that may be helpful, but is not mandatory.)

6.1 Intended use. The measurements depicted in this standard practice are intended for qualification testing; however, they are applicable for other types of test or evaluation programs that require these specific measurements for fiber optic cabling components used on military mobile vehicles (such as platforms).

6.2 Subject term (key word) listing.

Cable scraping resistance
Electromagnetic effects
Fungus resistance
Modified $SO_2$/salt spray
Smoke generation and flame propagation
Test sample configuration
Toxicity index

6.3 Changes from previous issue. The margins of this specification are marked with vertical lines to indicate where changes from the previous issue were made. This was done as a convenience only and the Government assumes no liability whatsoever for any inaccuracies in these notations. Bidders and contractors are cautioned to evaluate the requirements of this document based on the entire content irrespective of the marginal notations and relationship to the last previous issue.

6.4 Supersession data. The six parts of MIL-STD-1678 replace superseded DOD-STD-1678 with completely new fiber optic requirements and measurements. With the exception of some legacy material in MIL-STD-1678-5, none of the fiber optic test and measurement material comprising superseded DOD-STD-1678 has been included. With the exceptions noted in Part 5 of this standard practice, this standard practice should be applied in lieu of the legacy methods in superseded DOD-STD-1678.



Source: https://assist.dla.mil -- Downloaded: 2016-12-31T21:01Z
Check the source to verify that this is the current version before use.

# PHYSICAL MEASUREMENTS

3101 - 3105



Source: https://assist.dla.mil -- Downloaded: 2016-12-31T21:01Z
Check the source to verify that this is the current version before use.

MEASUREMENT 3101

SIZE

1. Purpose. This measurement is intended to provide further direction for equipment, setup, processes, and evaluation criteria for ensuring that the mechanical inspection for size is done in a consistent manner. This mechanical inspection is for "fit" only, as specified in TIA-455-13. No mechanical examination is performed for function, such as verifying interoperability, interface with mating components or (mechanical and optical) operation. To ensure that the risk to the Government of accepting bad measurement data is low, to minimize test variations, and to permit more accurate comparison of test results from multiple sources, a "standardized" approach is specified to perform this measurement.

2. Applicable documents.

2.1 General. The documents listed in this section are specified in sections 3, 4, and 5 of this standard practice. This section does not include documents cited in other sections of this standard practice or recommended for additional information or as examples. While every effort has been made to ensure the completeness of this list, document users are cautioned that they must meet all specified requirements of documents cited in sections 3 and 4 of this standard practice, whether or not they are listed.

2.2 Non-Government publications. The following documents form a part of this document to the extent specified herein. Unless otherwise specified, the issues of these documents are those cited in the solicitation or contract.

TELECOMMUNICATIONS INDUSTRY ASSOCIATION

TIA-455-13 - Visual and Mechanical Inspection of Fiber Optic Components, Devices, and Assemblies.

(Copies are available online at www.tiaonline.org or from Telecommunications Industry Association (TIA), 2500 Wilson Boulevard, Suite 300, Arlington VA 22201.)

2.3 Order of precedence. Unless otherwise noted herein or in the contract, in the event of a conflict between the text of this document and the references cited herein, the text of this document takes precedence. Nothing in this document, however, supersedes applicable laws and regulations unless a specific exemption has been obtained.

3. Definitions.

3.1 Size. The mechanical inspection for "fit" that consists of measuring the dimensions of the DUT specified in the component military specification or at a minimum, the dimensions for interoperability and compliance within a specified footprint (envelop dimensions).

4. Setup. Measurement 3101 will be conducted in accordance with the setup specified TIA-455-13 with the restrictions specified in 4.1 through 4.4.

4.1 Placement in test order. Size inspection shall occur prior to any fabrication of a DUT assembly (assembling the DUT with other fiber optic components to make the test samples).

4.2 DUT disassembly. DUT may be disassembled to the subcomponent level to obtain the required dimensional measurements. Unless otherwise specified, no disassembly shall be performed at the subcomponent level. No disassembly shall be performed that involves welded, riveted, bonded, or otherwise mechanically or chemically affixed parts.



Source: https://assist.dla.mil -- Downloaded: 2016-12-31T21:01Z
Check the source to verify that this is the current version before use.

4.3 Special measurement equipment or devices. No special measurement tool that makes a quantitative measurement is exempt from calibration. A special measurement device that is used to make the measurement shall be referred to as a special measurement tool versus fixture.

4.4 Measurement equipment. Unless otherwise specified, measurement equipment (instrument or tool) accuracy shall be ±0.02 mm (±.001 inch).

5. Test procedure. Measurement 3101 shall be conducted in accordance with the methodology specified TIA-455-13 with the restrictions for processes and evaluation criteria specified. Measurement processes shall include those summarized in 5.1 through 5.4.

5.1 Dimensional measurements. Dimensions on the DUT obtained as part of qualification shall include those listed in 5.1a through 5.1c.

a, Dimensions required for interoperability.

b. Maximum dimensions specified as the footprint or envelop.

c. Dimensions specified as part of the fiber optic component military specification.

5.2 Special processes. Test procedure for dimensional measurements shall contain the steps or processes for obtaining measurements that require special techniques or tools. Special processes are those in which measurement equipment is not used directly and the measurement is not straight forward.

5.3 Pass/fail criteria. Test equipment used shall be capable of measurement to the accuracy specified by the pass/fail criteria.

5.4 Data sheet. In addition to the items for the standard data sheet listed in MIL-STD-1678-2 Measurement 2201, the data sheet shall include the contents illustrated in method 3101 appendix A.

6. Notes.

6.1 Intents behind standardization efforts.

6.1.1 Multiple party testing considerations. The incentive to minimize test variables, resulting in a level playing field for multiple parties testing, leads the Government to establish a baseline. This baseline includes considerations for fabrication of test samples, methods to employ launch conditions, and use of specific test practices in addition to specifics for test sample configurations.



Source: https://assist.dla.mil -- Downloaded: 2016-12-31T21:01Z
Check the source to verify that this is the current version before use.

APPENDIX A

SIZE SAMPLE DATA SHEET

Excerpts to illustrate features for a dimensional inspection sample data sheet

A1. Dimensional inspection samples.

a. Excerpt from a data sheets to illustrate use of figures for indicating (1) points at which to take the measurement, (see figure 3101 A1), (2) view in which measurement can best be obtained, (see figure 3101 A2) and (3) supplemental views to best show points for particular measurements (see figure 3101 A3).

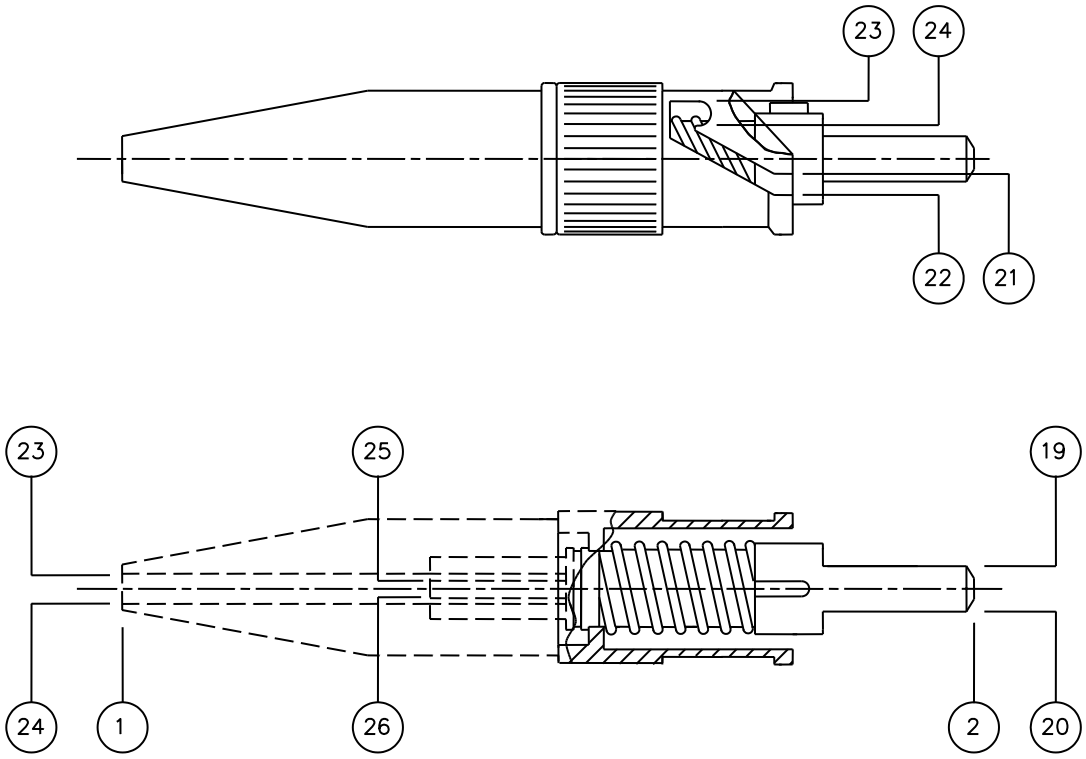


FIGURE 3101 A1. Figure showing points at which to take the measurement.



Source: https://assist.dla.mil -- Downloaded: 2016-12-31T21:01Z
Check the source to verify that this is the current version before use.

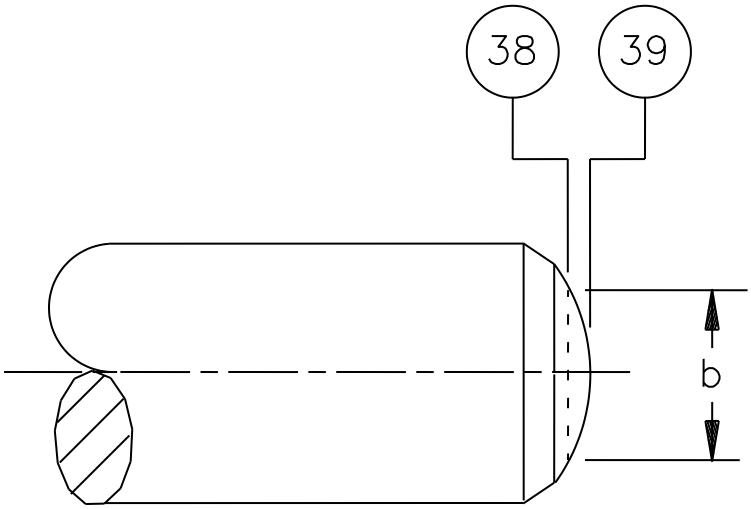


NOTE: "b" equals 2.00 mm (.079 inches) diameter is used to determine ferrule dome height 38-39

FIGURE 3101-A2. Figure showing view in which parameter for determining where dimensions are taken.

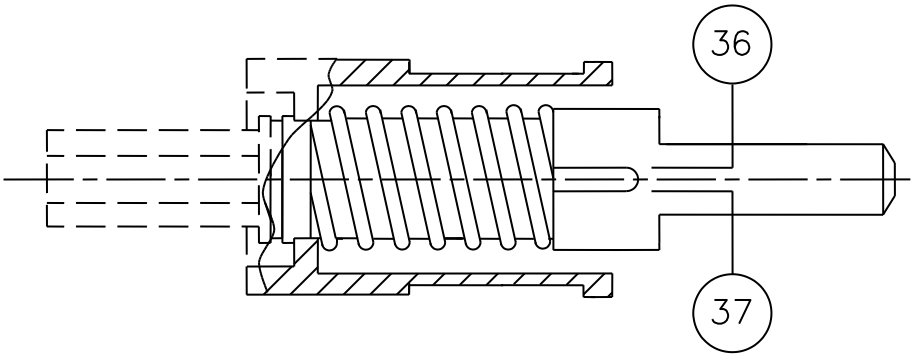


FIGURE 3101-A3. Figure showing points for particular measurements.

b. Excerpt from a data sheet to illustrate how the data sheet may be organized and optimized for the obtaining and recording proper measurements. For instance, the measurements may be arranged by different views (such as side, front profile), by measurements obtained with and without certain parts, and by which figure on the data sheet pertains to a specific measurement (when dimensional data sheet has multiple views and details). See table 3101-AI.



Source: https://assist.dla.mil -- Downloaded: 2016-12-31T21:01Z
Check the source to verify that this is the current version before use.

TABLE 3101-AI. Sample data sheet for figures 3101 A1 and 3101 A2.

| Test # | Max | Min | Sample # | P/F | Sample # | P/F | Sample # | P/F | Sample # | P/F |
|---|---|---|---|---|---|---|---|---|---|---|
| Measurement made after realigning the connector to view the opposite end face as shown in figure 3101-A1 | | | | | | | | | | |
| Width of fiber without jacket: dist. 23-24 | 0.126 | 0.079 | | | | | | | | |
| Measurement made after replacing the strain relief boot and keeping the same alignment as shown in figure 3101-A1 | | | | | | | | | | |
| Width of fiber with buffer: dist. 25-26 | 0.063 | 0.041 | | | | | | | | |
| Measurements made when ferrule is oriented as shown in figure 3101-A2 | | | | | | | | | | |
| Ferrule (X) dome: dist. 38-39 | 0.0025<br>0.0025 | 0.0006<br>0.0000 | | | | | | | | |

c. Excerpt from a data sheet to illustrate use of a supplemental measurement device or tool for obtaining a measurement (such as a distance or linear measurement by using gauge pins - see last distance dimension in excerpt, see table 3101-AII).

TABLE 3101-AII. Sample data sheet for figure 3101 A1 and 3101 A3.

| Test # | Max | Min | Sample # | P/F | Sample # | P/F | Sample # | P/F | Sample # | P/F |
|---|---|---|---|---|---|---|---|---|---|---|
| Overall length dist. 1-2 | 1.22<br>Ref | 1.08<br>Ref | | | | | | | | |
| Ferrule diameter: dist. 19-20 | 0.635<br>Ref | 0.538<br>1/ | | | | | | | | |
| Slot width 1: dist. 21-22 | 0.058 | 0.044 | | | | | | | | |
| Slot width 2: dist. 23-24 | 0.058 | 0.044 | | | | | | | | |
| Shoulder to shoulder dist. 25-26 2/: | 0.600 | 0.560 | | | | | | | | |
| Tab width, Dist. 36-37 | 0.042 | -0.036 | | | | | | | | |

NOTES:
1. For optical comparator programming only.
2. Measure with pins inserted from both sides



Source: https://assist.dla.mil -- Downloaded: 2016-12-31T21:01Z
Check the source to verify that this is the current version before use.

MEASUREMENT 3102

WEIGHT

1. Purpose. This measurement is intended to provide further direction for equipment, setup, processes, and evaluation criteria for ensuring that the mechanical inspection for weight is done in a consistent manner. This mechanical inspection is for "fit" only, as specified in TIA-455-13. No mechanical examination is performed for function, such as verifying interoperability, interface with mating components, or (mechanical and optical) operation. To ensure that the risk to the Government of accepting bad measurement data is low, to minimize test variations and to permit more accurate comparison of test results from multiple sources, a "standardized" approach is specified to perform this measurement.

2. Applicable documents.

2.1 General. The documents listed in this section are specified in sections 3, 4, and 5 of this standard practice. This section does not include documents cited in other sections of this standard practice or recommended for additional information or as examples. While every effort has been made to ensure the completeness of this list, document users are cautioned that they must meet all specified requirements of documents cited in sections 3, 4, and 5 of this standard practice, whether or not they are listed.

2.2 Government documents.

2.2.1 Specifications, standards, and handbooks. The following specifications, standards, and handbooks form a part of this document to the extent specified herein. Unless otherwise specified, the issues of these documents are those cited in the solicitation or contract.

DEPARTMENT OF DEFENSE STANDARDS

MIL-STD-1678-2 - Fiber Optic Cabling Systems Requirements and Measurements (Part 2: Optical Measurements).

(Copies of these documents are available online at http://quicksearch.dla.mil or from the Standardization Document Order Desk, 700 Robbins Avenue, Building 4D, Philadelphia, PA 19111-5094.)

2.3 Non-Government publications. The following documents form a part of this document to the extent specified herein. Unless otherwise specified, the issues of these documents are those cited in the solicitation or contract.

TELECOMMUNICATIONS INDUSTRY ASSOCIATION

TIA-455-13 - Visual and Mechanical Inspection of Fiber Optic Components, Devices, and Assemblies.

(Copies are available online at www.tiaonline.org or from Telecommunications Industry Association (TIA), 2500 Wilson Boulevard, Suite 300, Arlington VA 22201.)

2.4 Order of precedence. Unless otherwise noted herein or in the contract, in the event of a conflict between the text of this document and the references cited herein, the text of this document takes precedence. Nothing in this document, however, supersedes applicable laws and regulations unless a specific exemption has been obtained.

3. Definitions.

3.1 Balance. A lever device or mechanism used to compare a known mass with an unknown mass. The balance will provide the same measurement anywhere on the earth (since any local effect on gravity acts equally on both the known and unknown masses).



Source: https://assist.dla.mil -- Downloaded: 2016-12-31T21:01Z
Check the source to verify that this is the current version before use.

3.2 Mass. The term used as a measure of resistance to change in motion of an item when a force is applied without the influence of gravity. When calculating the mass from a weight measurement using a scale, the nominal standard gravity of 9.80665 m/sec$^2$ (32.174 ft./sec$^2$) will be used for qualification conversions.

3.3 Scale. A spring, hydraulic, or pneumatic device used to measure the local force of gravity on the item.

3.4 Standard weight. A term used to refer to a known mass that has been calibrated in units of mass.

3.5 Weight. The mechanical inspection for "fit" that consists of measuring the mass of the DUT relative to the force of gravity, as specified in the component military specification. Since the local force of gravity may vary up to 0.5 percent at different locations, scales measure different values of weight at different locations for the same item (or same mass).

4. Setup. Measurement 3102 shall be conducted in accordance with the setup specified TIA-455-13 with the restrictions specified in 4.1 through 4.3.

4.1 Placement in test order. Weight inspection shall occur prior to any fabrication of a DUT assembly (assembling the DUT with other fiber optic components to make the test samples).

4.2 DUT disassembly. No disassembly shall be performed at the component level.

4.3 Measurement equipment. Measurement equipment (scale or balance) accuracy shall be ±5 percent of span. Measurement equipment shall be within 10 to 90 percent of the range and have sufficient resolution to obtain measurement to within specified accuracy.

5. Test procedure. Measurement 3102 shall be conducted in accordance with the methodology specified TIA-455-13 with the restrictions for processes and evaluation criteria specified. Measurement processes shall include those summarized in 5.1 through 5.3.

5.1 Mass measurements. Measurement can be performed as specified in either 5.1.1 or 5.1.2.

5.1.1 Weight measurement. Weight of the DUT may be obtained using a scale. Mass shall then be calculated using the nominal standard gravity (see 3.2).

5.1.2 Mass measurement. Mass of the DUT may be obtained directly using a balance.

5.2 Pass/fail criteria. Test equipment used shall be capable of measurement to the accuracy specified by the pass/fail criteria.

5.3 Data sheet. In addition to the items for the standard data sheet listed in MIL-STD-1678-2 Measurement 2201, the data sheet shall include the items listed in 5.3a through 5.3d.

a. Type of measurement equipment (balance or scale).

b. Parameters if balance is used. Masses and accuracies of standards weights used, resolution of balance.

c. Parameters if scale is used. Range, resolution, and accuracy of scale used.

d. Table with each measurement obtained with units of measure.

6. Notes.

6.1 Intents behind standardization efforts.

6.1.1 Multiple party testing considerations. The incentive to minimize test variables, resulting in a level playing field for multiple parties testing, leads the Government to establish a baseline. This baseline includes considerations for fabrication of test samples, methods to employ launch conditions, and use of specific test practices in addition to specifics for test sample configurations.



Source: https://assist.dla.mil -- Downloaded: 2016-12-31T21:01Z
Check the source to verify that this is the current version before use.

MEASUREMENT 3103

WORKMANSHIP

1. Purpose. This measurement is intended to provide further direction for equipment, setup, processes, and evaluation criteria for ensuring that the visual and mechanical examinations performed for the workmanship inspection are done in a consistent manner and as specified in TIA-455-13. To ensure that the risk to the Government of accepting bad measurement data is low, to minimize test variations and to permit more accurate comparison of test results from multiple sources, a “standardized” approach is specified to perform this measurement.

2. Applicable documents.

2.1 General. The documents listed in this section are specified in sections 3, 4, and 5 of this standard practice. This section does not include documents cited in other sections of this standard practice or recommended for additional information or as examples. While every effort has been made to ensure the completeness of this list, document users are cautioned that they must meet all specified requirements of documents cited in sections 3, 4, and 5 of this standard practice, whether or not they are listed.

2.2 Non-Government publications. The following documents form a part of this document to the extent specified herein. Unless otherwise specified, the issues of these documents are those cited in the solicitation or contract.

TELECOMMUNICATIONS INDUSTRY ASSOCIATION

TIA-455-13 - Visual and Mechanical Inspection of Fiber Optics Components, Devices, and Assemblies.

(Copies are available online at www.tiaonline.org or from Telecommunications Industry Association (TIA), 2500 Wilson Boulevard, Suite 300, Arlington VA 22201.)

2.3 Order of precedence. Unless otherwise noted herein or in the contract, in the event of a conflict between the text of this document and the references cited herein, the text of this document takes precedence. Nothing in this document, however, supersedes applicable laws and regulations unless a specific exemption has been obtained.

3. Definitions.

3.1 Workmanship. The visual and mechanical inspections performed to qualitatively assess the degree or level of quality for the fabrication of the DUT as a completed component.

4. Setup. Measurement 3103 shall be conducted in accordance with the setup specified in TIA-455-13 with the restrictions specified in 4.1 through 4.4.

4.1 Placement in test order. Workmanship inspection shall occur prior to any fabrication of a DUT assembly (assembling the DUT with other fiber optic components to make the test samples).

4.2 DUT disassembly. DUT may be disassembled to the subcomponent level to inspect for the parameters specified in 5.1. Unless otherwise specified, no disassembly shall be performed at the subcomponent level. No disassembly shall be performed that involves welded, riveted, bonded, or otherwise mechanically or chemically affixed parts.

4.3 Special measurement equipment or devices. No special tools shall be used as part of this inspection to assess functionality of the DUT.



Source: https://assist.dla.mil -- Downloaded: 2016-12-31T21:01Z
Check the source to verify that this is the current version before use.

4.4 Measurement equipment. Unless otherwise specified, this visual inspection shall be done without magnification. As required, an optical magnifier may be used. Optical magnification for this inspection shall be limited to 3X to 5X.

5. Test procedure. Measurement 3103 shall be conducted in accordance with the methodology specified in TIA-455-13 with the restrictions for processes and evaluation criteria specified. Measurement processes shall include those summarized in 5.1 and 5.2.

5.1 Inspections. Inspections performed on the DUT obtained as part of qualification shall include those listed in 5.1.1 through 5.1.8.

5.1.1 Loose parts. Parts which adversely affect the environmental sealing or permit cable sealing, do not prevent penetration or degrade optical contact alignment are not acceptable.

5.1.2 Surface finish imperfections. Peeling or chipping of plating or finish, galling of wear, nicks, burrs, or other surface finish substandard blemishes or imperfections are not acceptable.

5.1.3 Part imperfections. Product/parts are not dimensionally uniform, free of lumps, kinks, splits, scraped or abraded surfaces, inclusions, or other imperfections.

5.1.4 Inner part imperfections. Inner parts contain fractures, holes, discontinuities, bulges, thin spots or other imperfections.

5.1.5 Cabling imperfections. Cable parts, cable or strength members are not uniformly laid or have discontinuities. Fillers and water sealant are not uniformly distributed throughout the cable body.

5.1.6 Mateability. Verify the connectors, adapters, and other interconnecting devices (mateable items) mate and unmate easily and make proper connection.

5.1.7 Functionality. Verify all mechanical mechanisms function properly. Ensure spring and latch mechanisms do not interfere with other components (cable fit into connector). Ensure knobs, button, and threaded components operate properly.

5.1.8 Installation. Verify all parts are assembled and seated properly.

5.2 Data sheet. In addition to the items for the standard data sheet listed in MIL-STD-1678-2 Measurement 2201, the data sheet shall include the contents illustrated in appendix A.

6. Notes.

6.1 Intents behind standardization efforts.

6.1.1 Multiple party testing considerations. The incentive to minimize test variables, resulting in a level playing field for multiple parties testing, leads the Government to establish a baseline. This baseline includes considerations for fabrication of test samples, methods to employ launch conditions, and use of specific test practices in addition to specifics for test sample configurations.



Source: https://assist.dla.mil -- Downloaded: 2016-12-31T21:01Z
Check the source to verify that this is the current version before use.

MEASUREMENT 3103

APPENDIX A

WORKMANSHIP INSPECTION SAMPLE DATA SHEET

A.1. Workmanship, visual.

a. Loose parts.

Criteria: No loose inserts or other parts which adversely affect environmental sealing, permit cable sealant penetration, or degrade optical contact alignment. Specify on data sheet.

Pass____ All parts included.

Fail____ Part(s) are missing. Specify on data sheet.

b. Finish Imperfections.

Criteria: No peeling or chipping of plating or finish, galling of wear, nicks, burrs, or other surface finish substandard blemishes or imperfections. Specify on data sheet.

Pass____ No finish imperfections observed that is detrimental to form, fit, or function or that could result in further protective coating or material degradation.

Fail____ Observed sufficient peeling or chipping of plating or finish, galling of wear, nicks, burrs, or other surface finish substandard blemishes or imperfections.

c. Surface Imperfections.

Criteria: No rust, burnt areas, abrasions, holes, rough-head areas, bulges, thin spots, or indentations.

Pass____ No surface imperfections observed that are detrimental to form, fit, or function or that could result in further protective coating or material degradation.

Fail____ Observed sufficient rust, burnt areas, abrasions, holes, rough-head areas, bulges, thin spots, or indentations. Specify on data sheet.

d. Part imperfections.

Criteria: Product/parts are dimensionally uniform, free of lumps, kinks, splits, scraped or abraded surfaces, inclusions or other imperfections.

Pass____ No part imperfections observed that are detrimental to form, fit, or function or that could result in further protective material or function degradation

Fail____ Observed product/parts are not dimensionally uniform, free of lumps, kinks, splits, scraped or abraded surfaces, inclusions, or other imperfections. Specify on data sheet.



Source: https://assist.dla.mil -- Downloaded: 2016-12-31T21:01Z
Check the source to verify that this is the current version before use.

e. Inner part imperfections.

Criteria: Inner parts contain no fractures, holes, discontinuities, bulges, thin spots, or other imperfections.

Pass____ No inner part imperfections observed that are detrimental to form, fit, or function or that could result in further material or function degradation

Fail____ Observed inner parts contain fractures, holes, discontinuities, bulges, thin spots, or other imperfections. Specify on data sheet.

f. Cabling imperfections.

Criteria: Cable parts, Cables or strength members are not uniformly laid or have discontinuities. Fillers and water sealant are not uniformly distributed throughout the cable body.

Pass____ No cabling imperfections observed that are detrimental to form, fit, or function or that could result in further material or function degradation.

Fail_____ Observed, cable parts cables or strength members are not uniformly laid or have discontinuities. Specify on data sheet.

_____ Observed fillers and water sealant are not uniformly distributed throughout the cable body. Specify on data sheet.

A.2. Workmanship, mechanical.

a. Mateability.

Criteria: Connectors, adapters, and other interconnecting devices (mateable items) mate and unmate easily and make proper connection.

Pass____ No mateability or other mechanical interconnects observed that are detrimental to form, fit, or function or that could result in preventing mating.

Fail____ Connectors, adapters, and other interconnecting devices (mateable items) do not mate and unmate easily or do not make the proper connection. Specify on data sheet.

____ Matable items will not mate. Specify on data sheet.

____ Mateable items were damaged during mating. Specify on data sheet.

____ Mateable items did not make proper connection. Specify on data sheet.



Source: https://assist.dla.mil -- Downloaded: 2016-12-31T21:01Z
Check the source to verify that this is the current version before use.

b. Functionality.

Criteria: Mechanical mechanisms function properly. Spring and latch mechanisms do not interfere with other components (cable fits into connector). Knobs, button, and threaded components operate properly.

Pass____ No mechanical mechanism malfunction observed that are detrimental to form, fit, or function or that could result in further material or function degradation.

Fail____ Spring and latch mechanisms will interfere with other components (cable fit into connector). Specify on data sheet.

____ Knobs, button, and threaded components do not operate properly. Specify on data sheet.

c. Installation.

Criteria: Parts are assembled and seated properly.

Pass____ No observed parts that are assembled or seated in a manner that are detrimental to form, fit, or function or that could result in further material or function degradation.

Fail____ Improperly seated or assembled parts. Specify on data sheet.

Details on failures recorded:



Source: https://assist.dla.mil -- Downloaded: 2016-12-31T21:01Z
Check the source to verify that this is the current version before use.

MEASUREMENT 3104

MARKING

1. Purpose. This measurement is intended to provide further direction for equipment, setup, processes, and evaluation criteria for ensuring that the visual inspection for markings is done in a consistent manner and as specified in TIA-455-13. No mechanical examination is performed for function, such as testing to verify durability or permanency. To ensure that the risk to the Government of accepting bad measurement data is low, to minimize test variations, and to permit more accurate comparison of test results from multiple sources, a “standardized” approach is specified to perform this measurement.

2. Applicable documents.

2.1 General. The documents listed in this section are specified in sections 3, 4, and 5 of this standard practice. This section does not include documents cited in other sections of this standard practice or recommended for additional information or as examples. While every effort has been made to ensure the completeness of this list, document users are cautioned that they must meet all specified requirements of documents cited in sections 3, 4, and 5 of this standard practice, whether or not they are listed.

2.2 Government documents.

2.2.1 Specifications, standards, and handbooks. The following specifications, standards, and handbooks form a part of this document to the extent specified herein. Unless otherwise specified, the issues of these documents are those cited in the solicitation or contract.

DEPARTMENT OF DEFENSE STANDARDS

| | | |
|---|---|---|
| MIL-STD-130 | - | Identification Marking of U. S. Military Property. |
| MIL-STD-1285 | - | Marking of Electrical and Electronic Parts. |

(Copies of these documents are available online at http://quicksearch.dla.mil or from the Standardization Document Order Desk, 700 Robbins Avenue, Building 4D, Philadelphia, PA 19111-5094.)

2.3 Non-Government publications. The following documents form a part of this document to the extent specified herein. Unless otherwise specified, the issues of these documents are those cited in the solicitation or contract.

TELECOMMUNICATIONS INDUSTRY ASSOCIATION

| | | |
|---|---|---|
| TIA-598 | - | Optical Fiber Cable Color Coding. |
| TIA-455-13 | - | Visual and Mechanical Inspection of Fiber Optic Components, Devices, and Assemblies. |

(Copies are available online at www.tiaonline.org or from Telecommunications Industry Association (TIA), 2500 Wilson Boulevard, Suite 300, Arlington VA 22201.)

2.4 Order of precedence. Unless otherwise noted herein or in the contract, in the event of a conflict between the text of this document and the references cited herein, the text of this document takes precedence. Nothing in this document, however, supersedes applicable laws and regulations unless a specific exemption has been obtained.



Source: https://assist.dla.mil -- Downloaded: 2016-12-31T21:01Z
Check the source to verify that this is the current version before use.

3. Definitions.

3.1 Marking. The visual inspection that consists of assessing lines, lettering (such as text, serial numbers, and date codes), and patterns (such as a logo or symbol) added on the surface of the DUT as specified in the component military specification.

4. Setup. Measurement 3104 shall be conducted in accordance with the setup specified TIA-455-13 with the restrictions specified in 4.1 through 4.3.

4.1 Placement in test order. Marking inspection shall occur initially prior to any fabrication of a DUT assembly (assembling the DUT with other fiber optic components to make the test samples). Subsequent marking inspections may occur after performing a sequence of other tests.

4.2 DUT disassembly. Restrictions of DUT disassembly shall comply with 4.2.1 through 4.2.3.

4.2.1 External surface markings. No DUT disassembly shall be performed.

4.2.2 Interior surface markings. No DUT disassembly shall be performed other than to un-mate connections or remove covers/panels.

4.2.3 General. No disassembly shall be performed at the subcomponent level. No disassembly shall be performed that involves welded, riveted, bonded, or otherwise mechanically or chemically affixed parts.

4.3 Measurement equipment.

4.3.1 Dimensional measurements. Unless otherwise specified, measurement equipment (instrument or tool) accuracy shall be ±0.02 mm (±.001 inch).

4.3.2 Optical magnification. Unless otherwise specified, this visual inspection shall be done without magnification. As required, an optical magnifier may be used. Optical magnification for this inspection shall be limited to 3X to 5X.

5. Test procedure. Measurement 3104 shall be conducted in accordance with the methodology specified TIA-455-13 with the restrictions for processes and evaluation criteria specified. Visual inspection shall include those summarized in 5.1 through 5.4. Markings include the manufacturer's name, symbol, CAGE Code, logo or trademark, and PIN (Part Identification Number).

5.1 Easily identifiable. Visually inspect the DUT as part of this qualification to ensure that identification markings are identifiable as specified in 5.1.1 through 5.1.4.

5.1.1 Marking height on exterior body or shell. Marking characters shall be a minimum of 1.02 mm (.040 inch) in height.

5.1.2 Maximum number of characters on exterior body or shell. Maximum number of characters around diameters of cylindrical part or on flat surface shall be in accordance with 6.4.2 of MIL-STD-1285.

5.1.3 Location on exterior body with respect to installation. Marking location on shell shall be in a location to ensure readability when installed (in accordance with appendix G of MIL-STD-1285).

5.1.4 Location on connector inserts. Markings of terminus cavities shall be on front and rear of inserts (refer to fiber optic component military specifications for designations)



Source: https://assist.dla.mil -- Downloaded: 2016-12-31T21:01Z
Check the source to verify that this is the current version before use.

5.2 Legibility and permanency (in accordance with MIL-STD-130). Visually inspect the DUT as part of this qualification to ensure that identification markings are permanent and legible as specified in 5.2.1 through 5.2.3.

5.2.1 Legibility. Markings shall be readily readable. Color contrast between characters and surface shall be good. Markings shall be considered legible when each character can be easily identified, even if some of the print is faded or removed.

5.2.2 Permanency. Normal life expectancy of markings shall appear achievable. Markings shall be capable of withstanding the environmental tests and cleaning procedures. DUT shall be considered as permanently marked if markings remain legible after completion of qualification tests.

5.2.3 Restrictions on character height. Raised or depressed characters shall not be used on mating surfaces.

5.3 Color codes and bands. Visually inspect the DUT as part of this qualification to ensure that identification markings are properly color coded as specified in 5.3.1 through 5.3.3.

5.3.1 Conformance to color code. Color code shall conform to limits of centroid colors in accordance with TIA-598 (use Munsel color chart book by Gretag Macbeth). During testing, colors shall remain within specified Munsel color limits from the centroid colors.

5.3.2 Fiber optic identification band for connectors. Connector shall be marked with either a yellow band or the words “Fiber Optics”.

5.3.3 Terminus TICC bands. Terminus shall contain 4 color coded bands or equivalent numbers, as specified in the fiber optic component military specification. Bands shall be color coded for the particular maximum ferrule hole diameter and body type. Color coding used shall conform to the following numbering scheme for the four TICC bands: 0 = black, 1 = brown, 2 = red, 3 = orange, 4 = yellow, 5 = green, 6 = blue, 7 = violet, 8 = gray, 9 = white.

5.4 Data sheet. In addition to the items for the standard data sheet listed in MIL-STD-1678-2 Measurement 2201, the data sheet shall include the contents illustrated in appendix A.

6. Notes.

6.1 Intents behind standardization efforts.

6.1.1 Multiple party testing considerations. The incentive to minimize test variables, resulting in a level playing field for multiple parties testing, leads the Government to establish a baseline. This baseline includes considerations for fabrication of test samples, methods to employ launch conditions and use of specific test practices in addition to specifics for test sample configurations.



Source: https://assist.dla.mil -- Downloaded: 2016-12-31T21:01Z
Check the source to verify that this is the current version before use.

MEASUREMENT 3104

APPENDIX A

MARKING INSPECTION SAMPLE DATA SHEET

If a failure is recorded, provide details on the extent of the failure observed (on bottom on data sheet).

Easily identifiable.

Character height on exterior body or shell.

Criteria: Marking characters shall be a minimum of .040 inch (1.02 mm) in height. Raised or depressed characters shall not be used on mating surfaces.

Pass____ Fail____

Maximum number of characters on exterior body or shell.

Criteria: Maximum number of characters around diameters of cylindrical part or on flat surface shall be in accordance with 6.4.2 of MIL-STD-1285.

Pass____ Fail____

Location on exterior body with respect to installation.

Criteria: Marking location on shell shall be in a location to ensure readability when installed (in accordance with appendix G, MIL-STD-1285).

Pass____ Fail____

Location on connector inserts.

Criteria: Markings of terminus cavities shall be on front and rear of inserts (refer to fiber optic component military specifications for designations).

Pass____ Fail____

Legibility and permanency (in accordance with MIL-STD-130).

Legibility.

Criteria: Markings shall be readily readable. Color contrast between characters and surface shall be good. Markings shall be considered legible when each character can be easily identified, even if some of the print is faded or removed.

Pass____ Fail____



Source: https://assist.dla.mil -- Downloaded: 2016-12-31T21:01Z
Check the source to verify that this is the current version before use.

Permanency.

Criteria: Normal life expectancy of markings shall appear achievable. Markings shall be capable of withstanding the environmental tests and cleaning procedures. DUT shall be considered as permanently marked if markings remain legible after completion of qualification tests.

Pass____ Fail____

Color codes and bands.

Conformance to color code.

Criteria: Color code shall conform to limits of centroid colors in accordance with TIA-598 (use Munsel color chart book by Gretag Macbeth). During testing, colors shall remain within specified Munsel color limits from the centroid colors.

Pass____ Fail____

Fiber optic identification band for connectors.

Criteria: Connector shall be marked with either a yellow band or the words “Fiber Optics”.

Pass____ Fail____

Terminus TICC bands.

Criteria: Terminus shall contain 4 color coded bands or equivalent numbers, as specified in the fiber optic component military specification. Bands shall be color coded for the particular maximum ferrule hole diameter and body type. Color coding used shall conform to the following numbering scheme for the four TICC bands: 0 = black, 1 = brown, 2 = red, 3 = orange, 4 = yellow, 5 = green, 6 = blue, 7 = violet, 8 = gray, 9 = white.

Pass____ Fail____

Details on failures recorded:



Source: https://assist.dla.mil -- Downloaded: 2016-12-31T21:01Z
Check the source to verify that this is the current version before use.

MEASUREMENT 3105

VISUAL AND MECHANICAL INSPECTION

1. Purpose. This measurement intended to provide further direction for equipment, setup, processes, and evaluation criteria for ensuring that the visual and mechanical inspections performed after completion of environmental, mechanical, or material testing are done in a consistent manner and as specified in TIA-455-13. When performed at the start of a qualification, prior to fabrication of an assembled DUT, more quantitative size, weight, workmanship, and marking inspections (in accordance with measurements 3101, 3102, 3103, and 3104) are done in lieu of this measurement. To ensure that the risk to the Government of accepting bad measurement data is low, to minimize test variations and to permit more accurate comparison of test results from multiple sources, a "standardized" approach is specified to perform this measurement.

2. Applicable documents.

2.1 General. The documents listed in this section are specified in sections 3, 4, and 5 of this standard practice. This section does not include documents cited in other sections of this standard practice or recommended for additional information or as examples. While every effort has been made to ensure the completeness of this list, document users are cautioned that they must meet all specified requirements of documents cited in sections 3, 4, and 5 of this standard practice, whether or not they are listed.

2.1.1 Specifications, standards, and handbooks. The following specifications, standards, and handbooks form a part of this document to the extent specified herein. Unless otherwise specified, the issues of these documents are those cited in the solicitation or contract.

DEPARTMENT OF DEFENSE STANDARDS

MIL-STD-1678-2 - Fiber Optic Cabling Systems Requirements and Measurements (Part 2: Optical Measurements).

(Copies of these documents are available online at http://quicksearch.dla.mil or from the Standardization Document Order Desk, 700 Robbins Avenue, Building 4D, Philadelphia, PA 19111-5094.)

2.2 Non-Government publications. The following documents form a part of this document to the extent specified herein. Unless otherwise specified, the issues of these documents are those cited in the solicitation or contract.

TELECOMMUNICATIONS INDUSTRY ASSOCIATION

TIA-455-13 - Visual and Mechanical Inspection of Fiber Optic Components, Devices, and Assemblies.

(Copies are available online at www.tiaonline.org or from Telecommunications Industry Association (TIA), 2500 Wilson Boulevard, Suite 300, Arlington VA 22201.)

2.3 Order of precedence. Unless otherwise noted herein or in the contract, in the event of a conflict between the text of this document and the references cited herein, the text of this document takes precedence. Nothing in this document, however, supersedes applicable laws and regulations unless a specific exemption has been obtained.

3. Definitions

3.1 Visual and mechanical inspection. The visual and mechanical inspections performed either before and/or during and/or after as directed by the particular test environmental, mechanical or material testing to qualitatively assess the degree or level of physical degradation to the DUT.



Source: https://assist.dla.mil -- Downloaded: 2016-12-31T21:01Z
Check the source to verify that this is the current version before use.

4. Setup. Measurement 3105 shall be conducted in accordance with the setup specified in TIA-455-13 with the restrictions specified in 4.1 through 4.4.

4.1 Placement in test order. The visual and mechanical inspections performed before and/or during and/or after as directed by the particular test environmental, mechanical, or material testing.

4.2 DUT disassembly. No disassembly shall be performed at the subcomponent level other than un-mating of connections and opening of covers/panels. No disassembly shall be performed that involves welded, riveted, bonded or otherwise mechanically or chemically affixed parts.

4.3 Special measurement equipment or devices. No special tools shall be used as part of this inspection to assess functionality of the DUT.

4.4 Measurement equipment. Unless otherwise specified, this visual inspection shall be done without magnification. As required, an optical magnifier may be used. Optical magnification for this inspection shall be limited to 3X to 5X.

5. Test procedure. Measurement 3105 shall be conducted in accordance with the methodology specified in TIA-455-13 with the restrictions for processes and evaluation criteria specified. Measurement processes shall include those summarized in 5.1 through 5.3. Pre and post exposure to test inspection shall check for: General construction, damage, missing parts, loose parts, finish imperfections, surface imperfections, part imperfections, inner part imperfections, cable imperfections, mateability, functionality, and installation. No optical magnification and no dimensional measurements are required for this inspection.

5.1 Inspections. Inspections performed on the DUT obtained as part of qualification shall include those listed in 5.1.1 through 5.1.12.

5.1.1 General design and construction. All form, fit, and function design features remain performing as designed.

5.1.2 Damage. No damage to parts occurred during shipping, testing, or standard cleaning.

5.1.3 Missing parts. All parts are included before and after completion of testing.

5.1.4 Loose parts. No loose inserts or other parts which adversely affect environmental sealing, permit cable sealant penetration, or degrade optical contact alignment.

5.1.5 Finish imperfections. No peeling or chipping of plating or finish, galling of wear, nicks, burrs, or other surface finish substandard blemishes or imperfections.

5.1.6 Surface imperfections. No rust, burnt areas, abrasions, holes, rough-head areas, bulges, thin spots, or indentations.

5.1.7 Part imperfections. Product/parts are dimensionally uniform, free of lumps, kinks, splits, scraped or abraded surfaces, inclusions, or other imperfections.

5.1.8 Inner part imperfections. Inner parts contain no fractures, holes, discontinuities, bulges, thin spots, or other imperfections.

5.1.9 Cabling imperfections. Cable parts, cables or strength members are not uniformly laid or have discontinuities. Fillers and water sealant are not uniformly distributed throughout the cable body.

5.1.10 Mateability. Connectors, adapters, and other interconnecting devices (mateable items) mate and unmate easily and make proper connection.



Source: https://assist.dla.mil -- Downloaded: 2016-12-31T21:01Z
Check the source to verify that this is the current version before use.

5.1.11 Functionality. Mechanical mechanisms function properly. Spring and latch mechanisms do not interfere with other components (cable fit into connector). Knobs, button, and threaded components operate properly.

5.1.12 Installation. Parts are assembled and seated properly.

5.2 Data sheet. In addition to the items for the standard data sheet listed in MIL-STD-1678-2 Measurement 2201, the data sheet shall include the contents illustrated in appendix A.

5.3 Performing mechanical workmanship inspections. When a sequence of tests are performed in which DUT assemblies are not to be unmated during the sequence (such as with the series of environmental testing), the mechanical inspections for workmanship shall not be performed as part of a visual examination of the DUT assembly.

6. Notes.

6.1 Intents behind standardization efforts.

6.1.1 Multiple party testing considerations. The incentive to minimize test variables, resulting in a level playing field for multiple parties testing, leads the Government to establish a baseline. This baseline includes considerations for fabrication of test samples, methods to employ launch conditions and use of specific test practices in addition to specifics for test sample configurations.



Source: https://assist.dla.mil -- Downloaded: 2016-12-31T21:01Z
Check the source to verify that this is the current version before use.

MEASUREMENT 3105

APPENDIX A

VISUAL AND MECHANICAL INSPECTION SAMPLE DATA SHEET

If a failure is recorded, provide details on the extent of the failure observed (on bottom on data sheet).

A.1. General design and construction.

Criteria: All form, fit, and function design features remain performing as designed.

Pass____ All design features affecting form, fit, and function are included. Component construction is substantial.

Fail____ Design feature is missing. Specify on data sheet.

____ Construction is not substantial. Specify on data sheet.

A.2. Damage.

Criteria: No damage to parts occurred during shipping, testing, or standard cleaning.

Pass____ No damage occurred.

Fail____ Damage occurred that affects form, fit, or function. Specify on data sheet.

A.3. Missing parts.

Criteria: All parts are included upon arrival for and after completion of testing.

Pass____ All parts included.

Fail____ Part(s) are missing. Specify on data sheet.

A.4. Identification markings and color.

a. Markings.

Criteria: All markings are present, of correct/minimum readable height, and of sufficient legibility and permanency.

Pass____ All markings are present, of correct/minimum readable height, and of sufficient legibility and permanency.

Fail____ All markings are not present. Specify on data sheet.

____ Height of markings is too small to read/distinguish characters. Specify on data sheet.

____ Markings are insufficiently legible (legible is if each character can be easily identified, even if some of the print is faded or removed). Specify on data sheet.



Source: https://assist.dla.mil -- Downloaded: 2016-12-31T21:01Z
Check the source to verify that this is the current version before use.

____ Markings are not permanent (permanent is if markings remain legible after completion of qualification test sequence). Specify on data sheet.

b. Color.

Criteria: Color is present and within correct shade.

Pass____ Color within specified shade.

____ No color requirement is specified.

Fail____ Color is outside of specified shades. Specify on data sheet.

A.5. Workmanship, visual.

a. Loose parts.

Criteria: No loose inserts or other parts which adversely effect environmental sealing, permit cable sealant penetration, or degrade optical contact alignment. Specify on data sheet.

Pass____ All parts included.

Fail____ Part(s) are missing. Specify on data sheet.

b. Finish imperfections.

Criteria: No peeling or chipping of plating or finish, galling of wear, nicks, burrs, or other surface finish substandard blemishes or imperfections.

Pass____ No finish imperfections observed that is detrimental to form, fit, or function or that could result in further protective coating or material degradation.

Fail____ Observed sufficient peeling or chipping of plating or finish, galling of wear, nicks, burrs, or other surface finish substandard blemishes or imperfections.

c. Surface imperfections.

Criteria: No rust, burnt areas, abrasions, holes, rough-head areas, bulges, thin spots, or indentations.

Pass____ No surface imperfections observed that are detrimental to form, fit, or function or that could result in further protective coating or material degradation.

Fail____ Observed sufficient rust, burnt areas, abrasions, holes, rough-head areas, bulges, thin spots, or indentations. Specify on data sheet.

d. Part imperfections.

Criteria: Product/parts are dimensionally uniform, free of lumps, kinks, splits, scraped or abraded surfaces, inclusions or other imperfections.

MEASUREMENT 3105



Source: https://assist.dla.mil -- Downloaded: 2016-12-31T21:01Z
Check the source to verify that this is the current version before use.

Pass____ No part imperfections observed that are detrimental to form, fit or function or that could result in further protective material or function degradation

Fail____ Observed product/parts are not dimensionally uniform, free of lumps, kinks, splits, scraped or abraded surfaces, inclusions or other imperfections. Specify on data sheet.

e. Inner part imperfections.

Criteria: Inner parts contain no fractures, holes, discontinuities, bulges, thin spots or other imperfections.

Pass____ No inner part imperfections observed that are detrimental to form, fit or function or that could result in further material or function degradation

Fail____ Observed inner parts contain fractures, holes, discontinuities, bulges, thin spots or other imperfections. Specify on data sheet.

f. Cabling imperfections.

Criteria: Parts, Cables and strength members are not uniformly laid and/or have discontinuities. Fillers and water sealant are not uniformly distributed throughout the cable body.

Pass____ No cabling imperfections observed that are detrimental to form, fit or function or that could result in further material or function degradation.

Fail____ Observed, Parts Cables and strength members are not uniformly laid and/or have discontinuities. Specify on data sheet.

____ Observed fillers and water sealant are not uniformly distributed throughout the cable body. Specify on data sheet.

A.6. Workmanship, mechanical.

a. Mateability.

Criteria: Connectors, adapters, and other interconnecting devices (mateable items) mate and unmate easily and make proper connection.

Pass____ No mateability or other mechanical interconnects observed that are detrimental to form, fit or function or that could result in preventing mating.

Fail____ Connectors, adapters, and other interconnecting devices (mateable items) do not mate and unmate easily or do not make the proper connection. Specify on data sheet.

_____ Mateable items will not mate. Specify on data sheet.

____ Mateable items were damaged during mating. Specify on data sheet.

____ Mateable items did not make proper connection. Specify on data sheet.

MEASUREMENT 3105



Source: https://assist.dla.mil -- Downloaded: 2016-12-31T21:01Z
Check the source to verify that this is the current version before use.

b. Functionality.

Criteria: Mechanical mechanisms function properly. Spring and latch mechanisms do not interfere with other components (cable fit into connector). Knobs, button, and threaded components operate properly.

Pass____ No mechanical mechanism malfunction observed that are detrimental to form, fit or function or that could result in further material or function degradation.

Fail____ Spring and latch mechanisms will interfere with other components (cable fit into connector). Specify on data sheet.

____ Knobs, button, and threaded components do not operate properly. Specify on data sheet.

c. Installation.

Criteria: Parts are assembled and seated properly.

Pass____ No observed parts that are assembled or seated in a manner that are detrimental to form, fit, or function or that could result in further material or function degradation.

Fail____ Improperly seated or assembled parts. Specify on data sheet.

Details on failures recorded:

MEASUREMENT 3105



Source: https://assist.dla.mil -- Downloaded: 2016-12-31T21:01Z
Check the source to verify that this is the current version before use.

# MECHANICAL MEASUREMENTS

3201 - 3203



Source: https://assist.dla.mil -- Downloaded: 2016-12-31T21:01Z
Check the source to verify that this is the current version before use.

MEASUREMENT 3201.1

VIBRATION

1. Purpose. This measurement is performed when there is the requirement to subject the FOCT (fiber optic cable topology) component or device under test (DUT) to the stimulus of vibration. This measurement is intended to be used as part of qualification testing and is intended to supplement the applicable military standard (such as MIL-STD-167), commercial standard (such as TIA-455-11) or military specification (such as MIL-DTL-38999) for performing mechanical vibration testing on fiber optic components as specified in the applicable component military specification using a vibration machine that generates sinusoidal and random vibration environments. Further refinements or boundaries (constraints) are imposed in this measurement. To ensure that the risk to the Government of accepting bad optical measurement data is low, to minimize test variations and to permit more accurate comparison of test results from multiple sources, a “standardized” approach is specified to perform this measurement.

2. Applicable documents.

2.1 General. The documents listed in this section are specified in sections 3, 4, or 5 of this standard practice. This section does not include documents cited in other sections of this standard practice or recommended for additional information or as examples. While every effort has been made to ensure the completeness of this list, document users are cautioned that they must meet all specified requirements of documents cited in sections 3, 4, or 5 of this standard practice, whether or not they are listed.

2.2 Government documents.

2.2.1 Specifications, standards, and handbooks. The following specifications, standards, and handbooks form a part of this document to the extent specified herein. Unless otherwise specified, the issues of these documents are those cited in the solicitation or contract.

DEPARTMENT OF DEFENSE SPECIFICATIONS

MIL-PRF-28876 - Connectors, Fiber Optic, Circular, Plug and Receptacle Style, Multiple Removable Termini, General Specification for.
MIL-DTL-38999 - Connectors, Electrical, Circular, Miniature, High Density Quick Disconnect (Bayonet, Threaded and Breech Coupling), Environment Resistant, Removable Crimp and Hermetic Solder Contacts, General Specification for.
MIL-DTL-83522 - Connectors, Fiber Optic, Single Terminus, General Specification for.

DEPARTMENT OF DEFENSE STANDARDS

MIL-STD-167-1 - Mechanical Vibrations of Shipboard Equipment, (Type I - Environmental and Type II - Internally Excited.)

(Copies of these documents are available online at http://quicksearch.dla.mil or from the Standardization Document Order Desk, 700 Robbins Avenue, Building 4D, Philadelphia, PA 19111-5094.)

2.3 Non-Government publications. The following documents form a part of this document to the extent specified herein. Unless otherwise specified, the issues of these documents are those cited in the solicitation or contract.

TELECOMMUNICATIONS INDUSTRY ASSOCIATION

TIA-455-11 - Vibration Test Procedure for Fiber Optic Components and Cables.
TIA-455-20 - Measurement Methods and Test Procedures-Monitoring of Changes in Optical Transmittance (IEC-60793-1-46 Optical Fibers Part 1-46)

(Copies are available online at www.tiaonline.org or from Telecommunications Industry Association (TIA), 2500 Wilson Boulevard, Suite 300, Arlington VA 22201.)



Source: https://assist.dla.mil -- Downloaded: 2016-12-31T21:01Z
Check the source to verify that this is the current version before use.

SAE INTERNATIONAL

SAE-AS33671 - Strap, Tiedown, Electrical Components, Adjustable Self-Cinching, Plastic, Type I, Class 1.

(Copies are available online at http://www.sae.org or can be obtained from the Society of Automotive Engineers (SAE International), 400 Commonwealth Drive, Warrendale, PA 15096-0001.)

2.4 Order of precedence. Unless otherwise noted herein or in the contract, in the event of a conflict between the text of this document and the references cited herein, the text of this document takes precedence. Nothing in this document, however, supersedes applicable laws and regulations unless a specific exemption has been obtained.

3. Definitions.

3.1 Vibration measurement. A test performed to determine the capability of an operational DUT when simulating the environment in which the DUT may be placed with sinusoidal and random vibration.

4. Test setup.

4.1 Methods to employ during vibration setup for connectors.

4.1.1 Test fixture integrity. The test fixture with a dummy load must be tested prior to fiber optic component qualification to verify no resonance occurs within the frequency range being tested.

4.1.2 Location of cable supports. The first set of cable supports after exiting the connector shall be located a minimum of 203.2 mm (8 inches) from the back end of a connector strain relief. NOTE: A set implies cable supports at each end of a connector mated pair.

4.1.3 Tension in cables exiting the connector. Portion of cabling exiting the connector and secured to the cable support is to be kept straight (parallel to the axial, versus radial, direction of the connector) but allow up to 38.1 mm (1.5 inch) deflection or movement (deflect cable 38.1 mm (1.5 inch) from horizontal or straight run).

4.1.4 Isolated cable supports. The first set of cable supports after exiting the connector shall be isolated from (not affixed to) the vibration table.

4.1.5 External cable support structure. For large vibration machines where the table length exceeds the location where the first cable supports, an external cable support structure may be constructed. In one configuration, the first cable support may be affixed to the external cable support structure and suspended from above the vibration table. The external cable support structure must be isolated from the vibration table (machine).

4.1.6 Securing cable from DUT to cable supports. Cable that is exiting the connector is to be kept straight before placement onto the cable support. Cable may be secured to the cable support by means of tie wraps. Tie wraps are to be snug so that movement of the cable is restricted, but tie wrap exerts minimal to no pressure on the cables. If alternate means to secure the cables are used, this same restricted movement with minimal to no pressure on the cables is to be observed. For most applications, 101.6 mm (4-inch) long tie wraps may be used. SAE-AS33671 electrical tie down straps, adjustable, plastic, type I, class 1, miniature, 80.1 newtons (18 pounds) minimum tensile strength (such as P/N MS3367-4-9, NSN 5975-00-727-5153 or P/N MS3367-4-0, NSN 5975-00-903-2284) or other equivalent commercial self-locking cable ties.

4.1.7 Maintain minimum bend diameter. No cable bend is to exceed (be smaller than) the long term, minimum bend diameter of cable either at or after the cable support.



Source: https://assist.dla.mil -- Downloaded: 2016-12-31T21:01Z
Check the source to verify that this is the current version before use.

4.2 Test Instrumentation.

4.2.1 Optical signal discontinuity. Monitor a minimum of four channels per DUT for optical signal discontinuity during the test.

4.2.2 Change in optical transmittance. Monitor all DUT channels for change in optical transmittance before and after each test condition.

4.2.3 Instrumentation used. Refer to MIL-STD-1678-2, Measurements 2102 and 2104 for setups pertaining to change in optical transmittance and to optical signal discontinuity, respectively.

4.2.4 Vibration isolation. Ensure that optical equipment is isolated from vibration. Surface vibration can affect instrumentation and connections at the optical ports. One method for isolation is to place optical instrumentation on foam pads or other type of resilient surface.

4.2.5 Accelerometer setup.

a. Orient accelerometer so it is mounted along the 3 principal axes of the DUT.

b. Stud mounting accelerometer to supplemental fixture is preferred mounting method. Mount accelerometer to fixture using supplied mounting studs or supplied screws (such as Allen head cap screws). When used, tighten Allen head cap screws to torque specified on the accelerometer parameter sheet.

c. Clean microdot connector signal pins using isopropyl alcohol. Connect one end to the appropriate accelerometer for axis under test. Connect the remaining end to the charge amp input.

d. Connect the accelerometer amplifier BNC output to the data acquisition interface box using suitable BNC-BNC cable. Connect to appropriate data acquisition channel.

e. Set the amplifier sensitivity and set amplifier settings to provide a recording capability at 80 percent of the data acquisition card range.

f. Set the lower frequency limit at 2 Hz or as applicable.

g. Set the upper frequency limit at 1 kHz or as applicable.

h. Move power switch to “On”.

i. Verify that batteries, if used, are charged. Replace or recharge batteries as required.

4.2.6 Data acquisition setup for accelerometer measurement. Ensure acceptable optical signal trace by verifying that no saturation of the optical trace has occurred. Flat horizontal lines in the signal trace close to the baseline (0 dB) or close to optical signal peaks is an indication of amplifier saturation. For example, using a -10 to +10 Volt signal, a data acquisition board would clip (become saturated) at ± 10 Volts. A flat line signal is a voltage level greater than +10 Volts or less than –10 Volts and is beyond the capability of the data acquisition system to measure it.

4.2.7 Accelerometer calibration. The accelerometer shall be calibrated to at least ± 5 percent over the frequency range of 5 to 2,000 Hz.

4.2.8 Accelerometer selection. The accelerometer selected for a vibration sensor should have a fundamental resonant frequency that is not less than 10,000 Hz.

MEASUREMENT 3201.1



Source: https://assist.dla.mil -- Downloaded: 2016-12-31T21:01Z
Check the source to verify that this is the current version before use.

4.2.9 Accelerometer placement. The accelerometer shall be rigidly secured and located on the test fixture foundation as near as possible to the DUT, but not on the DUT itself.

4.3 Torque. For multiple termini connectors with coupling rings, apply specified torque and mark position as indicated below.

4.3.1 Applying torque. Prior to testing, initial mate and apply specified torque value.

4.3.2 Marking coupling ring position. Mark position after torque applied and check/record position after each axis.

NOTE: The performance of the connector assembly is based upon the dimensions that exist with the connector tightened properly and the mating components completely seated. This is especially true in connectors that use spring loaded inserts and elastic environmental seals/gaskets that must be properly preloaded/pre-stressed to function according to design parameters. Either the tightening torque should be specified, a final dimension or check mark established, or the connector tightened until no free play exists between the receptacle and the plug portion. Since the condition of "no free play' is somewhat indefinable and usually no marks are provided, the tightening torque specified for the connector must be used. The marking is also critical in determining if the change in measured performance is caused by the connector becoming loose. Vibration is a mechanical test and the energy imparted should not create any movement any of the connector components, which could degrade the optical performance of the assembly (including loosening). Usually, accelerometers or other instrumentation is used to determine the response of items under test, however, due to the size and shape of connectors this is difficult to accomplish. Visual observation of alignment marks is an easy and efficient method to determine if the impact is causing an undesirable condition. Consideration should be given to identifying/specifying the amount of looseness that is acceptable. Ideally there should be no loosening whatsoever.

4.3.3 Connectors with ratchet mechanism. For a mating connector containing a coupling ring ratchet mechanism or where specified for a particular connector type, do not tighten during testing.

4.3.4 MIL-PRF-28876 connectors. Verify that DUT is sufficiently tight. When mated initially by hand tighten, do not bottom out threads prior to applying torque. Apply torque as specified in the table of 3201-I. Verify/apply the torque after test in each axis. Mark position after application of torque and check/record position after test in each axis.

TABLE 3201-I MIL-PRF-28876 coupling nut torque requirements.

| Shell size | 11 | 13 | 15 | 23 |
|---|---|---|---|---|
| Torque (in-lb) | 15 | 15 | 25 | 50 |

4.3.5 MIL-DTL-38999 connectors. Initially mate and apply a torque. For shell size 11 (2 termini connector, apply a torque of 1.4 N-m (12 inch-pound). Mark position after torque applied and check/record position after each impact. Mating halves contain a ratchet mechanism. Do not tighten after each axis.

4.3.6 Verify mating parts retained on single ferruled connectors. For MIL-DTL-83522 connectors, COTS ST, LC and SC connectors, verify that the adapters are adequately tightened/fastened to the patch panel. Verify that DUT is sufficiently tight and did not become disconnected/loose after each impact.

4.4 Test fixture.

4.4.1 Test fixture integrity. Prior to performing the measurement, the test fixture with a dummy load must be tested prior to fiber optic component qualification to verify no resonance occurs within the frequency range being tested.

4.4.2 Securing DUT assembly cabling. Securing of cabling shall be performed as specified in 4.1.2 through 4.1.7.

4.4.3 Test fixture for mechanical splices, aircraft applications. Test fixture shall conform to requirements and configuration as specified in appendix B.

MEASUREMENT 3201.1



Source: https://assist.dla.mil -- Downloaded: 2016-12-31T21:01Z
Check the source to verify that this is the current version before use.

5. Test procedure. Unless otherwise specified, measurement shall be performed in accordance with 5.1 (MIL-STD-167) specifically for a shipboard application, performed in accordance with 5.2 (TIA-455-11) for general applications, and performed in accordance with 5.3 for aircraft applications. General measurement processes that shall be implemented are specified in 5.4 through 5.8.

5.1 Test condition A synopsis, testing performed in accordance with MIL-STD-167. Use for a DUT specified specifically for a shipboard application (such as a MIL-I-24728/1 interconnection box).

a. Perform type I exploratory vibration test (front cover off during test):

(1) Frequency range with amplitude: 4 to 33 Hz at 0.25 ± 0.05 mm (.010 ± .002 inch).

(2) Frequency range with amplitude: 34 to 50 Hz at 0.08 ± 0.003 mm (.003 ± .001 inch) is optional to cover other vibration applications.

(3) Discrete frequency interval: 1 Hz.

(4) Duration at each frequency: 15 seconds minimum.

b. Perform type I variable frequency test (front cover on during test, remove after test to inspect for damage):

(1) Frequency range with amplitude: 4 to 50 Hz at amplitudes in accordance with table I of MIL-STD-167-1.

(2) Discrete frequency interval: 1 Hz.

(3) Duration at each frequency: 5 minutes minimum.

c. Perform Type I endurance test (front cover on during test, remove after test to inspect for damage):

(1) If resonance frequency(s) occurred: at least 2 hours at each resonance frequency chosen by test engineer.

(2) If resonance frequency did not occur: Test at 50 Hz at amplitude of 0.07 mm +0.00/-0.03 mm (.003 +.000/-.001 inch) for minimum of 2 hours.

d. Repeat for other two orthogonal axes (vertical, side-to-side, front-to-back).

5.2 Test condition B synopsis testing performed in accordance with TIA-455-11. Unless otherwise specified, use test condition II and test condition VII for multiple termini connectors, test condition III and test condition VII for single ferrule connectors.

a. Perform test condition II (Swept Sine) 10 Hz to 500 Hz (except extend low limit to 5 Hz) where:

(1) Amplitude: 1.52 mm (.06 inch) double amplitude or 10 g peak, whichever is less.

(2) Tolerance: Plus or minus 10 percent on vibration amplitude.

(3) Frequency range: Vary logarithmically between 5 Hz and 500 Hz.

(4) Sweep time: Fifteen minutes per cycle (9 hours total).

(5) Number of cycles: Twelve times in each of 3 mutually perpendicular directions for 36 times.



Source: https://assist.dla.mil -- Downloaded: 2016-12-31T21:01Z
Check the source to verify that this is the current version before use.

b. Perform test condition III (Swept Sine) 10 Hz to 2,000 Hz (except extend low limit to 5 Hz) where:

(1) Amplitude: 1.52 mm (0.06 inch) double amplitude or 10g peak (versus 15 g peak), whichever is less.

(2) Tolerance: Plus or minus 10 percent on vibration amplitude.

(3) Frequency range: Vary logarithmically between 10 Hz and 2000 Hz except test condition I procedure may be applied between 10 to 55 Hz (with duration for this 10 Hz to 55 Hz range of approximately 1.33 hours in each axis for the test condition I procedure).

(4) Sweep time: 20 minutes per cycle (12 hours total).

(5) Number of cycles: Twelve times in each of 3 mutually perpendicular directions for 36 times.

c. Perform TIA test condition VII and letter C (random) 50 Hz to 2,000 Hz envelope where:

(1) C = 0.06 power spectral density, 10.2 overall RMS G.

(2) Vibration envelope: See figure 3 of TIA-455-11.

(3) Duration: One and a half hours (30 minutes per axis).

5.3 Test condition C synopsis, testing performed on a DUT used in an aircraft environment. Perform the sine vibration test and the two random vibration tests.

a. Sine (sinusoidal or swept sine) vibration in accordance TIA-455-11, test condition III tailored using the vibration input (amplitude) versus frequency range in table 3201-II and modified durations specified herein. Vibration shall be performed at ambient temperature only. This cycle shall be performed 12 times in each of three mutually perpendicular directions at ambient temperature. This results in a total of 36 cycles being applied for approximately 12 hours. The sequence shall be repeated twice. (36 hours total at ambient temperature). Interruptions are permitted provided the requirements for rate of change and test duration are met. Completion of cycling within any separate band is permissible before proceeding to the next band.

TABLE 3201-II. Sine vibration parameter inputs.

| Frequency range | Vibration input |
|---|---|
| 10 – 50 Hz | 254 mm/sec |
| 50 – 140 Hz | 1.5 mm double amplitude |
| 140 – 2,000 Hz | 60 G |

b. Random vibration in accordance with TIA-455-11, test condition VII - Letter “J”. Duration shall be 8 hours in the longitudinal direction (orientation parallel to the optical fiber length and designated at the z axis) and 8 hours in the radial or transverse direction (orientation parallel to the optical fiber end cross section and in the x-y plane) for a total of 16 hours. Vibration shall be performed at a temperature of 125°C. Calculated overall Grms value from vibration machine controller shall be provided.

c. Random vibration in accordance with TIA-455-11, test condition VI tailored using the power spectral density versus frequency curve in appendix C (figure 3201 C-1) which starts at 25 Hz. Duration shall be 8 hours in the longitudinal direction (orientation parallel to the optical fiber length and designated at the z axis) and 8 hours in the radial direction (orientation parallel to the optical fiber end cross section and in the x-y plane) for a total of 16 hours. Vibration shall be performed at ambient temperature. Calculated overall Grms value from vibration machine controller shall be provided.

MEASUREMENT 3201.1



Source: https://assist.dla.mil -- Downloaded: 2016-12-31T21:01Z
Check the source to verify that this is the current version before use.

5.4 Panel removal during testing. Below is a synopsis of purpose while expounding on requirement for testing with an enclosure panel(s) on (in place) or off (removed). One application is for testing a fiber optic interconnection box (FOICB) with front cover on/off. This synopsis is written for performing the vibration test to MIL-STD-167 where this swept sine testing is done in three parts (exploratory, variable frequency, endurance). For tests (such as TIA-455-11) where each test condition (either swept sine or random) is done in one part, testing is to be performed using the guidance for panel placement under variable frequency.

5.4.1 Exploratory. The purpose is to identify frequencies at which resonance occurs to test at these frequencies in the endurance test. No damage is expected. Perform with panel(s) off to observe if there is any resonant activity of the test items. Purpose is to perform a quick-look preliminary sweep to identify critical frequencies. Corrective measures or specific instrumentation can be implemented before proceeding to the variable frequency and endurance tests.

5.4.2 Variable frequency. The purpose is to verify that DUT performance is maintained with no detrimental effects at each different frequency. The duration of 5 minutes allows performance checks/inspections to be accomplished. The DUT must be able to perform its intended function in the presence of the specified vibration without any basic failure (such as fatigue/overstress damage) or degraded performance. Perform this test with the panel(s) on. Remove cover after variable frequency test in each axis to inspect for damage before continuing with endurance test.

5.4.3 Endurance. The purpose is to test at each resonance frequency at 2 hours per frequency or the maximum test frequency for 2 hours if no resonances are observed in order to ensure that no damage or performance degradation occurs. Perform this test with the cover on. Remove cover after endurance test in each axis to inspect for damage.

5.5 Optical measurements.

5.5.1 Change in optical transmittance.

5.5.1.1 Method. The change in optical transmittance shall be measured during and after the test (from a baseline obtained before each test) in accordance with TIA-455-20 for transmitted power adhering strictly to the setup and test procedure specified in MIL-STD-1678-2, measurement 2102.

5.5.1.2 Optical instrumentation capacity. This optical monitoring assumes that an optical measurement system is available with a sufficient channel measurement capability and that only one optical source exists that requires only one monitoring channel (to monitor and compensate for optical source drift).

5.5.1.3 Calculated parameters. Change in optical transmittance or the logarithmic power ratio of DUT post measurement relative to pre-impact measurement. The computation is as follows:

$$\text{Log (dB)} = 10 \log [(Pt_i/Pt_o].$$

Where: $Pt_o$ = Power transmission of item under test measured before start of test.

$Pt_i$ = Power transmission of item under test measured after axis/test.

$Pt_i/Pt_o$ = Relative change in power transmission of the item under test after axis/test.

5.5.2 Optical signal discontinuity.

5.5.2.1 Recorded parameters. Recorded parameters are to include the maximum change in optical transmittance during discontinuity interval (dB), and the time duration of discontinuity (microseconds).

MEASUREMENT 3201.1



Source: https://assist.dla.mil -- Downloaded: 2016-12-31T21:01Z
Check the source to verify that this is the current version before use.

NOTE: Record, at a minimum, the discontinuity with the maximum duration in which the change in optical transmittance exceeds 0.5 dB (if any). Also record the corresponding maximum value of the change in optical transmittance for the discontinuity with the maximum duration.

5.5.5.2 Calculated parameters. Optical signal discontinuity after each event ($\Delta D$) = 10 log ($Pti/Pt_0$) where:

$Pt_0$ = Power transmission of test fiber measured before start of the event.

Pti = Power transmission of test fiber measured after the event.

($Pti/Pt_0$) = relative change in power transmission of test fiber after event.

NOTE: Record an increase in optical transmittance (increasing power) as a positive (+) dB.

5.6 Data sheet. In addition to the items for the standard data sheet listed in MIL-STD-1678-2, measurement 2201, the data sheet shall list the items in 5.6a through 5.6c.

a. Test apparatus shall include the vibration machine and type of mounting fixture (mounting plates, if any, used to secure the DUT to the test fixture, mounting plate used to secure the test fixture to the vibration machine).

b. Axis/direction, amplitude and frequency range/band plus any additional descriptive test item data (such as damage occurred, specific frequency, or resonance that occurred at a specific frequency).

c. Test tolerances for the following optical signal discontinuity parameters: Maximum allowed change in optical transmittance (signal level) during shock pulse in dB, maximum allowed time duration of optical signal discontinuity in microseconds, and maximum allowed relative change in optical transmittance before/after an event in dB.

5.7 Posttest visual examination.

5.7.1 Physical deterioration. Evidence of any of the following defects after the test shall be cause for failure of the DUT:

a. Broken or excessively worn engaging hardware.
b. Uneven wear or galling of hardware, guide pins, or mating surfaces.
c. Excessive debris from worn surfaces.
d. Damage or wear to seals, if applicable.
e. Displaced, bent, broken, or chipped parts.
f. Scratching of the interface area.
g. Leaking of filling of potting compounds.
h. Relative motion between cable and connector/splice parts.
i. Physical distortion/wear resulting in fatigue or failure.
j. Separation of bonded surfaces.
k. Unless otherwise specified, connectors shall not exhibit loosening of parts for the range of frequencies tested.

MEASUREMENT 3201.1



Source: https://assist.dla.mil -- Downloaded: 2016-12-31T21:01Z
Check the source to verify that this is the current version before use.

NOTE: Minor physical damage to the tested item, such as small cracks, minor yielding of structure, out-of tolerance clearances, and similar damage may not be cause for vibration test disapproval if such damage is accepted by the DLA Land and Maritime (DLA VQP) and unless such damage causes unacceptable impairment of equipment performance, results in a hazard, or results in substantially shortened equipment useful life.

5.7.2 Optical performance.

a. Maximum allowed change (discontinuity) in optical signal amplitude during vibration (in dB).

b. Maximum allowed duration of optical signal discontinuity for multimode DUT/channels.

c. Maximum allowed duration of optical signal discontinuity for single mode DUT/channels.

d. Maximum allowed change in optical transmittance after each test condition (in dB).

5.7.3 Mechanical deterioration. Inability of the launch or detector connectors to properly mate and un-mate during or after the completion of the test shall be cause for failure of the DUT.

5.8 Safety. Safety items include, but are not limited to, the following:

a. Post sign stating “VIBRATION TEST IN PROGRESS” where appropriate.

b. Verify all personnel in the facility are wearing their ear protection in a proper manner.

c. Inspect setup to ensure that torque on applicable bolts is to proper values and mechanical components are locked/in proper position prior to performing the test.

5.9 Verification. The checklist in appendix A is provided to ensure compliance for inspection purposes.

5.10 Test interruptions. Test must be continued as specified in accordance with 4.3.1 of MIL-STD-1678-3, if interruption exceeds 1 hour.

5.11 Contamination. When test samples are comprised of connectors or termini, the ferrule end face of each connector/termini mated pair shall be inspected for cleanliness after the completion of the test or during specified points during and after the completion of the test, as specified. Inspection shall be performed using a Fiber Optic Video Inspection System (FOVIS). As an option, each end face shall be captured using software provided with the FOVIS. For each cleaning operation performed, a table is requested to summarize the number of cleaning steps, cleaning device, cycle used, and result.

6. Notes.

6.1 Intended use, qualification testing. Stresses are applied to simulate conditions over an in-service condition and that under the stresses to show compliance with specification requirements.



Source: https://assist.dla.mil -- Downloaded: 2016-12-31T21:01Z
Check the source to verify that this is the current version before use.

APPENDIX A

MINIMUM ESSENTIAL CHECKLIST FOR VIBRATION MEASUREMENTS

A.1. Purpose. This appendix addresses a checklist of the minimum essentials for the vibration measurement.

A.2. Usage. Table 3201A-I is the checklist of minimum essentials for Government auditors, or their representatives, use during inspections. This checklist should be expanded at the auditor's discretion.

TABLE A-I. Minimum essential checklist for vibration measurements.

| Item | Category | Description | Requirement | Compliance |
|---|---|---|---|---|
| 1 | Test sample configuration | Cable assembly length: connectors and splices | 10 meters minimum (13 m if to do 3 cut-backs) | |
| | | Other fiber optic components: see MIL-STD-1678-4 | Complies with MIL-STD-1678-4 | |
| 2 | Room ambient environmental condition | Standard ambient (if test equipment built to operate in this range, if not-then controlled ambient) | 23°C ±5°C/73°F ± 9°F and 20% to 70% RH | |
| | | Controlled ambient | 23°C ±2°C/73°F ±4°F and 45% to 55% RH | |
| 3 | Test condition | Test setup cable routing | Bend diameters ≥ min long term bend diameter | |
| | | | Sharp twists and bends avoided | |
| | | | Avoid protrusions/other obstacles | |
| 4 | Vibration measurement | Accelerometer parameters | Calibration: ±5 percent over the frequency range of 5 to 2,000 Hz | |
| | | | Selection: fundamental resonant frequency ≤ 10,000 Hz. | |
| | | | Placement: Secured rigidly (stud mounted preferred), on test fixture foundation, near as possible to, but not on DUT | |
| | | | Orientation: along 3 principle axes of DUT | |
| | | | Connect instrument cabling: Clean connections, select suitable cable (such as BNC-BNC cable) | |
| | | | Verify proper amplifier sensitivity set for accelerometer used | |



Source: https://assist.dla.mil -- Downloaded: 2016-12-31T21:01Z
Check the source to verify that this is the current version before use.

TABLE 3201A-I. Minimum essential checklist for vibration measurements - Continued.

| Item | Category | Description | Requirement | Compliance |
|---|---|---|---|---|
| | Test equipment | | | |
| 5 | Vibration test (Use test conditions A, B, or C) | MIL-STD-167 type (Test condition A) | Perform type I exploratory, type I variable frequency, type I endurance (see 5.1) | |
| | | TIA-455-11 type (Test condition B) | Perform test conditions II (swept sine) and VII (random) or III (swept sine) and VII, as specified (see 5.2). | |
| | | Aircraft applications (Test condition C) | Perform sine, random at elevated temperature, random at ambient (see 5.3) | |
| 6 | Optical measurements | Change in optical transmittance | Compliance with measurement 2101 of MIL-STD-1678-2 | |
| 7 | Examinations | Visual inspection | No leakage, loss of sealing capacity, damage detrimental to operation | |
| | | Ferrule end face contamination | FOVIS inspected and cleaned. Table provided summarizing cleaning steps, cleaning device, cycle used, and result | |
| | | Optical fiber connections | Routed outside chamber or to an optical interface port at chamber wall | |
| 8 | Test setup | Test fixture validation | Pre-qualification test, fixture tested with dummy load to verify no resonances occur within frequency range being tested | |
| | | Cabling supports | First at ≥ 203.2 mm (8 inch) from DUT assembly, isolated from vibration table | |
| | | | Cable taunt with up to 38.1 mm (1.5 inch) deflection, at bends do not exceeded minimum bend diameter | |
| | | | Secure/tie down cables (tie wraps allowed/make snug) | |
| | | Data acquisition setup | Verify no amplifier saturation occurs (see 4.2.6) | |
| | | Torque | Applies to non-aircraft, multiple termini connectors (see 4.3) | |
| | | Test processes | Compliance with measurement 3201 | |



Source: https://assist.dla.mil -- Downloaded: 2016-12-31T21:01Z
Check the source to verify that this is the current version before use.

TABLE 3201A-I. Minimum essential checklist for vibration measurements - Continued.

| Item | Category | Description | Requirement | Compliance |
|---|---|---|---|---|
| 9 | Test | Maintain setup during test (source end) | No disconnection allowed until after testing completed (see MIL-STD-1678-2 measurements 2102, 2104) | |
| | | Number of channels monitored | Optical signal discontinuity: >4<br>Change in optical transmittance: all (before and after each test condition) | |
| | | Panel removal during testing (see 5.4) | Applicable type DUT include interconnection boxes | |
| | | | Exploratory: cover (panel) off | |
| | | | Variable frequency: on during test, off each axis to inspect | |
| | | | Endurance: on during test, off each axis to inspect | |
| 10 | Calculations | Operator performed calculations | Verify correct method used and calculated properly (see 5.5) | |
| | | Approved data sheet | Compliance with Measurement 2201 of MIL-STD-1678-2 | |
| 11 | Data sheet | Added data sheet requirement | Test apparatus includes:<br>Vibration machine<br>Mounting fixture<br>Mounting plates | |
| | | | Test parameters and limits:<br>Axis/direction, Amplitude,<br>Frequency range/band,<br>Any descriptive test data (see 5.5.2) | |
| | | | Test tolerances for the following optical signal discontinuity parameters:<br>Maximum allowed change in optical transmittance (signal level) during shock pulse in dB<br>Maximum allowed time duration of optical signal discontinuity in microseconds,<br>Maximum allowed relative change in optical transmittance before/after impact in dB | |
| | | | If connector, was DUT mated or unmated | |



Source: https://assist.dla.mil -- Downloaded: 2016-12-31T21:01Z
Check the source to verify that this is the current version before use.

TABLE 3201A-I. Minimum essential checklist for vibration measurements - Continued.

| Item | Category | Description | Requirement | Compliance |
|---|---|---|---|---|
| 11 | Data sheet - continued | Posttest visual examination for physical deterioration | Broken or excessively worn engaging hardware.<br>Uneven wear or galling of hardware, guide pins, or mating surfaces.<br>Excessive debris from worn surfaces.<br>Damage or wear to seals, if applicable.<br>Displaced, bent, broken, or chipped parts.<br>Scratching of the interface area.<br>Leaking of filling of potting compounds.<br>Relative motion between cable and connector/splice parts.<br>Physical distortion/wear resulting in fatigue or failure.<br>Separation of bonded surfaces.<br>Connectors shall not exhibit loosening of parts for the range of frequencies tested (unless otherwise specified). | |
| | | Posttest visual examination for mechanical deterioration | Connectors: Ability of the launch or detector connectors to properly mate and un-mate during or after the completion of the test.<br>Other: Ability to operate mechanical items, install and remove panels. | |
| 12 | Pass/fail criteria | Proper criteria implemented | Test operators know if fail and to verify result | |

A.3. Notes.

A.3.1 Intended use.

A.3.1.1 Audit team. This checklist is intended to assist Government auditors or their representatives during inspections. This checklist may be augmented at the auditor's discretion; however, it is not to be reduced.

A.3.1.2 Test laboratories. When test laboratories prepare to perform vibration measurements or audits, this checklist should be used to supplement measurement 3201, not replace it



Source: https://assist.dla.mil -- Downloaded: 2016-12-31T21:01Z
Check the source to verify that this is the current version before use.

# APPENDIX B

## FIBER OPTIC MECHANICAL SPLICE SHOCK AND VIBRATION TEST FIXTURE

B.1 Intent. The purpose of this appendix is to specify the test fixture, test setup and specific installation requirements for performing shock and vibration testing on a fiber optic mechanical splice. This mechanical splice is used in aircraft applications primarily; however, usage may extend to shipboard and other vehicle type applications.

B.2 Applicable documents.

B.2.1 General. The documents listed in this section are specified in sections B-3, B-4, or B-5 of this appendix. This section does not include documents cited in other sections of this standard practice or recommended for additional information or as examples. While every effort has been made to ensure the completeness of this list, document users are cautioned that they must meet all specified requirements of documents cited in sections B-3, B-4, or B-5 of this appendix, whether or not they are listed.

B.2.2 Government documents.

B.2.2.1 Specifications, standards, and handbooks. The following specifications, standards, and handbooks form a part of this document to the extent specified herein. Unless otherwise specified, the issues of these documents are those cited in the solicitation or contract.

COMMERCIAL ITEM DESCRIPTION

A-A-52083 - Commercial Item Description, Tape, Lacing and Tying, Glass.

DEPARTMENT OF DEFENSE SPECIFICATIONS

MIL-S-901 - Shock Tests, H.I. (High Impact) Shipboard Machinery, Equipment, and Systems, Requirements For

DEPARTMENT OF DEFENSE STANDARD

MIL-STD-167-1 - Mechanical Vibrations of Shipboard Equipment, (Type I - Environmental and Type II - Internally Excited.)

(Copies of this document are available online at http://quicksearch.dla.mil or from the Standardization Document Order Desk, 700 Robbins Avenue, Building 4D, Philadelphia, PA 19111-5094.)

B.2.2.2 Other Government documents, drawings, and publications. The following other Government documents, drawings, and publications form a part of this document to the extent specified herein. Unless otherwise specified, the issues of these documents are those cited in the solicitation or contract.

GENERAL SERIES TECHNICAL MANUAL

NAVAIR 01-1A-505-4/T.O. 1-1A-14-4/TM 1-1500-323-24-4: Technical Manual, Installation and Repair Practices, Aircraft Electric and Electronic Wiring

(A copy of this document can be obtained at web site: https://jswag.navair.navy.mil. At the home page select “Document Library” (on left side), then select the “JFOWG” folder followed by the “Maintenance Documents” folder.)

B.2.3 Non-Government publications. The following documents form a part of this document to the extent specified herein. Unless otherwise specified, the issues of these documents are those cited in the solicitation or contract.



Source: https://assist.dla.mil -- Downloaded: 2016-12-31T21:01Z
Check the source to verify that this is the current version before use.

APPENDIX B

TELECOMMUNICATIONS INDUSTRY ASSOCIATION

TIA-455-11 - Vibration Test Procedure for Fiber Optic Components and Cables.
TIA-455-20 - Measurement Methods and Test Procedures-Monitoring of Changes in Optical Transmittance (IEC-60793-1-46 Optical Fibers Part 1-46).

(Copies are available online at www.tiaonline.org or from Telecommunications Industry Association (TIA), 2500 Wilson Boulevard, Suite 300, Arlington VA 22201.)

SAE INTERNATIONAL

SAE- AS50881 - Wiring, Aerospace Vehicle
SAE- AS21919 - Clamp, Loop Type, Cushioned Support

(Copies are available online at http://www.sae.org or can be obtained from the Society of Automotive Engineers (SAE International), 400 Commonwealth Drive, Warrendale, PA 15096-0001.)

B.2.4 Order of precedence. Unless otherwise noted herein or in the contract, in the event of a conflict between the text of this document and the references cited herein, the text of this document takes precedence. Nothing in this document, however, supersedes applicable laws and regulations unless a specific exemption has been obtained.

B.3 Definitions.

B.3.1 Moderate force. The qualitative range of a force than can be applied that falls between a light force and a heavy force. A light force is one in which is limited to the weight of the hand. A heavy force is one that requires physical exertion to the extent that muscle contraction is noticeable or other muscles, outside the hand and wrist, are used to augment in applying the force. While applying a moderate force to test cable deflection, one would observe none to slight flexing of the fingers. No contraction or use of muscles, outside of the hand or wrist, is used to assist in applying the force.

B.3.2 Primary supports. Supports used to carry the weight of and secure the fiber optic cable in its intended position by the use of metal cushion clamps in accordance with SAE-AS21919.

B.3.3 Secondary supports. Supports used to secure the cabling between primary supports and assist in carrying the weight. Lacing tape is used to provide the secondary support. Specifically for this application, the secondary support is the means used to secure the test sample to the test fixture.

B.4 Test fixture construction.

B.4.1 Components comprising test fixture. The test fixture shall consist of square stock, primary supports, secondary supports, cabling (simulated by the convoluted tubing portion of a cable harness) used between primary supports, a backing plate (if required) and the DUT (Device Under Test). The primary supports, secondary supports and cabling (simulated by the convoluted tubing portion of a cable harness) used between primary supports shall be affixed to the square stock as shown in figure 3201 B-1. The square stock shall have a 10.2 x 10.2 cm (4 x 4 inch) cross section, approximately 12.7 mm (.5 inch) thick, 51 mm (20 inch) length and be made of aluminum. If required for vibration testing, a backing plate may be used as an adapter to affix the square stock to the vibration table. The term “backing plate” is meant to include any additional structural member(s) for securing the square stock to the table on the vibration machine or drop tester. The configuration is not limited to a plate or specific location. Backing plate design must be approved by the qualifying activity.



Source: https://assist.dla.mil -- Downloaded: 2016-12-31T21:01Z
Check the source to verify that this is the current version before use.

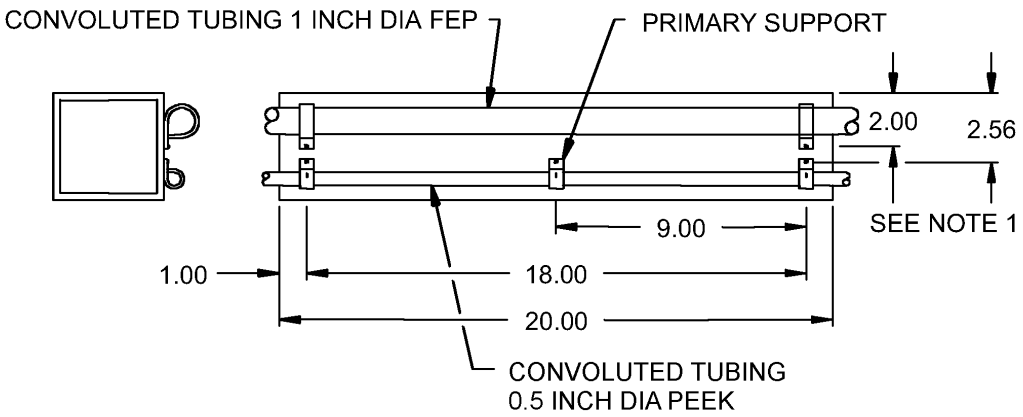


NOTES:

1. Dimensions 2.00 and 2.56 locate the center of the cable clamp mounting screw hole. See B.4.2d for cable clamp orientation.
2. See note 1/ under table 3201 B-I for alternative to using self-locking nuts.
3. Configuration (1) is for the top cabling installation with the 25.4 mm (1.0 inch) diameter FEP convoluted tubing.
   Configuration (2) is for the bottom cabling installation with the 12.7 mm (.5 inch) diameter PEEP convoluted tubing.
4. Dimensions shown in the figure are in inches.

FIGURE 3201 B-1 Test fixture construction illustrating the 2 different cable harnesses with mounting configurations.

B.4.2 Primary supports.

a. Background. Primary support of fiber optic cable assemblies shall be provided by the use of metal cushion clamps in accordance with AS21919. Plastic cable clamps, lacing tape or plastic cable straps shall not be used for the primary support of fiber optic cable assemblies. Fiber optic cabling includes fiber optic cable, cable bundles, cable harnesses, conduit and convoluted tubing. Secondary supports, as shown in figure 3201 B-2, are the means used to secure the mechanical splice to a fiber optic cable assembly. Secondary supports will be addressed separately.

(1) Size for 12.7 mm (.5 inch) diameter convoluted tubing: MS21919WDG10 (NSN: 5340-00-584-6556).

(2) Size for 25.4 mm (1.0 inch) diameter convoluted tubing: MS21919WDG20 (NSN: 5340-00-664-8188).

NOTE: These two part numbers may begin in AS21919 instead of MS21919.

b. Distance between clamps. Most cabling damage requiring the use of a mechanical splice is expected to occur near the connector. Two installation configurations for mechanical splice are to be tested to simulate cabling runs from an electronic box that contains a mechanical splice. Test fixture shall simulate these following two installation configurations:



Source: https://assist.dla.mil -- Downloaded: 2016-12-31T21:01Z
Check the source to verify that this is the current version before use.

(1) Configuration 1. This configuration simulates the installation of a mechanical splice in an 45.72 cm (18 inch) unsupported run from electronics box. Mechanical splice shall be placed in the middle of the 45.72 cm (18 inch) run (see configuration (1) in figure 3201 B-1).

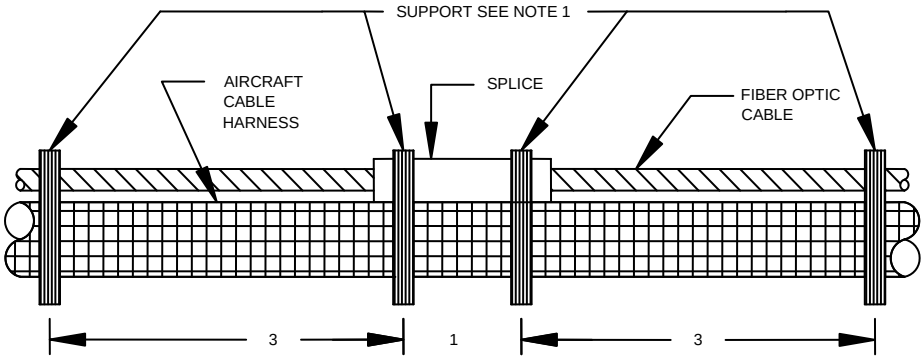


NOTES
1. Secondary support, lacing tape/tie (NOT a cable tie).
2. Dimensions are in inches.

FIGURE 3201 B-2. Secondary support spacing to secure mechanical splice to cable harness.

(2) Configuration 2. This configuration simulates the installation of a mechanical splice at a primary support. Mechanical splice shall be at, and inside, of a primary support. The two adjacent primary supports shall be located 22.8 cm (9 inches) from the one at the mechanical splice (see configuration (2) in figure 3201 B-1).

c. Number of splices tested. At a minimum, two mechanical splices affixed to a simulated cable harness in accordance with test configuration (1) in figure 3201 B-1 and two mechanical splices affixed to a simulated cable harness in accordance with test configuration (2) in figure 3201 B-1 shall be tested for each type cable and fiber size specified.

d. Orientation of cable clamps. Orient cable clamps for configuration (1) so that the cable clamp mounting screw hole is on the bottom. Orient cable clamps for configuration (2) so that the cable clamp mounting screw hole is on the top. The intent of these orientations are to maximize distance between convoluted tubing runs and between the convoluted tubing for configuration (2) and the vibration table.

e. Installation. Open the cable clamp and lay the portion of the fiber optic cabling attached to the mechanical splice into the cable clamp. Do not push the cabling through the cable clamp.

f. Tightening. Clamp shall be installed such that they do not exert more pressure on the cable than the minimum required to prevent slipping. Tighten cable clamp to constrain, but not constrict, the cabling (cabling is snug, but no deformation, kink, or pinch is evident).

g. Testing. Verify that cabling is installed properly in the cable clamp by performing the following inspections:

(1) Sliding (shear or parallel) force. Test by verifying that no sliding is evident when a moderate force is applied.

MEASUREMENT 3201.1



Source: https://assist.dla.mil -- Downloaded: 2016-12-31T21:01Z
Check the source to verify that this is the current version before use.

(2) Bending (downward or perpendicular) force. Test by applying a downward force with moderate hand pressure (force) midway between primary supports. Verify that the maximum slack (deflection) midway between primary supports does not exceed 12.7 mm (.5 inch) (see figure 3201 B-3).

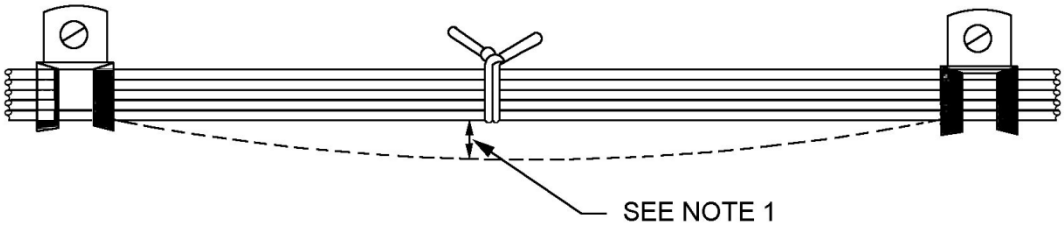


NOTE 1: 12.7 mm (.5 inch) maximum slack with moderate hand pressure.

FIGURE 3201 B-3 Maximum deflection between primary supports.

B.4.3 Secondary supports.

a. Background. Secondary support of fiber optic cable assemblies shall be provided by the use lacing tape (also referred to as tying tapes, lacing ties or ties) in accordance with A-A-52083, glass tying, sizes 2 or 3, finish C. Continuous lacing, plastic cable clamps or plastic cable straps shall not be used for the secondary support of fiber optic cable assemblies. Lacing tape is the means used to secure the mechanical splice to the test fixture in its intended position and carries its weight. As such, the lacing tape is considered as the secondary support. The term "spot ties" becomes appropriate when lacing tape is used to separate a number of fiber optic cables or cable bundles within a cable harness or convoluted tubing (as a separator and not a means to secure).

b. Distance between lacing tape (secondary support).

(1) At the mechanical splice, both configurations (1) and (2). One lacing tie shall be placed 12.7 mm (.5 inch) from the middle of the mechanical splice along the longitudinal axis (z axis). A second lacing tie shall be placed 12.7 mm (.5 inch) from the middle of the mechanical splice from the other end (see figure 3201 B-2).

(2) At the mechanical splice, configuration (2) only. First place lacing ties onto the mechanical splice as specified in B.4.3b(1). Next affix the middle of the mechanical splice to the cable clamp (primary support).

(3) On the cabling exiting the mechanical splice. After the initial lacing tie is placed on the mechanical splice, the spacing between adjacent lacing ties on the simulated cable harness (convoluted tubing) shall be every 76.2 mm (3 inches) (see figure 3201 B-2).

c. Lacing procedure. Lace or tie mechanical splice and exiting cable securely enough to support these components between the primary supports. Extreme care should be used in lacing to assure that each lacing tie does not deform the existing cable.

(1) First make a clove hitch as shown in figure 3201 B-4.



Source: https://assist.dla.mil -- Downloaded: 2016-12-31T21:01Z
Check the source to verify that this is the current version before use.

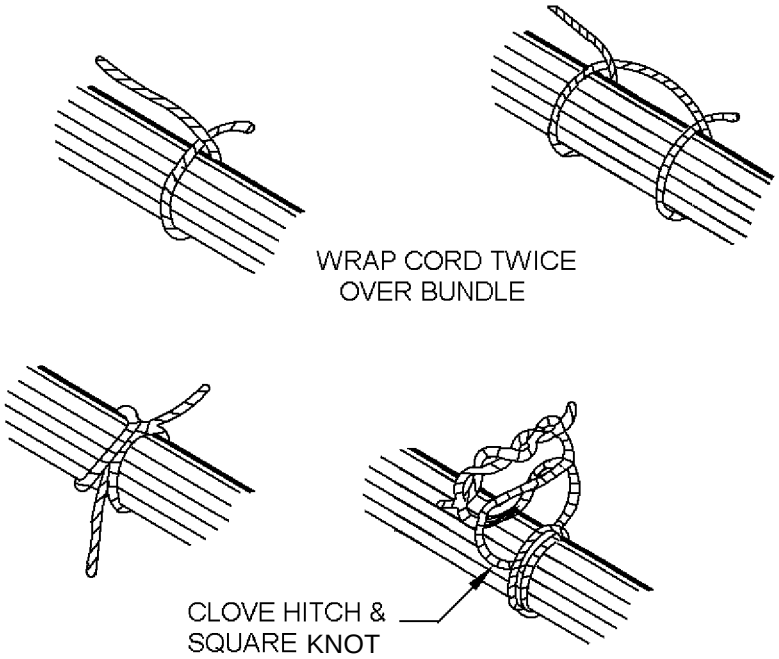


FIGURE 3201 B-4. Lacing process for secondary support.

(2) Next follow the clove hitch with a square knot. Complete the second part of the square knot with an extra loop as shown in figure 3201 B-4.

(3) Trim the free ends of the lacing ties to 9.53 mm (.375 inch) minimum.

B.4.4 Cabling type used between primary supports. The cabling used to represent the outside of a protected cable harness shall consist of the following convoluted tubing:

a. Configure (1). This configuration has 45.7 cm (18 inch) spacing between primary supports. The mechanical splice is located midway between these two primary supports and is held in-place only by secondary supports. Convoluted tubing used shall be made from FEP (fluorinated ethylene propylene), have a 25.4 mm (1.0 inch) diameter and conform to Glenair Part # 120-100-1-1-32CF or equivalent.

b. Configure (2). This configuration has 22.9 cm (9 inch) spacing between primary supports. The mechanical splice is located at and centered in the middle primary support. The mechanical splice is held in-place by midway by the primary support and along the length by secondary supports. Convoluted tubing used shall be made from PEEK (polyether-ether-ketone), have a 12.7 mm (0.5 inch) diameter and conform to Glenair Part # 120-100-1-1-16CK or equivalent.

B.4.5 Backing plate.

a. Shock, MIL-S-901 LWSM (Light Weight Shock Machine). The square stock shall be affixed directly to a type "4A" mounting fixture without a backing plate.

MEASUREMENT 3201.1



Source: https://assist.dla.mil -- Downloaded: 2016-12-31T21:01Z
Check the source to verify that this is the current version before use.

b. Shock, sinusoidal pulse. When used (see B.4.1), the backing plate shall contain the applicable hole pattern and be affixed directly to both the square stock and to the vibration machine table or drop tester table, as applicable.

c. Vibration. When used (see B.4.1), the backing plate shall contain the applicable hole pattern and be affixed directly to both the square stock and to the vibration machine table.

d. Backing plate material and configuration.

(1) Material: Aluminum 6061-T6.

(2) Dimensions (as applicable).

(3) Thickness: 50.8 mm (2 inch) (recommended).

B.4.6 Hardware. Screws, spacers and other hardware to secure the primary support (cable clamps) to the 10.2 cm x 10.2 cm (4 x 4 inch) square stock are listed in table 3201 B-I.

TABLE 3201 B-I. Hardware to secure primary supports.

| Description | Part number | NSN |
|---|---|---|
| Screw, hex-head, 1 inch by 10-32 inch | NAS1096-3-16 | 5305-01-135-7079 |
| Spacer, .625 inch | NAS43DD3-40 | 5365-00-808-2527 |
| Washer, flat, 10-32 inch | AN960C10L | 5310-00-167-0812 |
| Nut, self-locking, 10-32 inch 1/ | BRH10A3 | 5310-00-680-4892 |

1/ Tapped holes with helical inserts in the 10.2 cm x 10.2 cm (4 x 4 inch) square stock and use of a locking compound is a permissible alternative to use of the self-locking nuts. Drill a 5.16 mm (.203 inch) diameter hole (drill # 059) and tap for a 10-32 helicoil.

B.5 Supplementary requirements.

B.5.1 Accelerometer placement. At a minimum, one accelerometer shall be used to record time history plot (amplitude trace) during shock. Accelerometer shall be mounted on the 4A mounting fixture (see B.4.5a) when using a MIL-S-901 LWSM adjacent to the leftmost primary support for configuration (1) in accordance with figure 3201 B-1. Accelerometer shall be mounted on vibration machine table or drop tester table, as applicable, adjacent to the leftmost primary support for configuration (1) in accordance with figure 3201 B-1 when testing with equipment inputting a sinusoidal pulse.

B.5.2 Test fixture configuration. The same test fixture with the same configuration shall be used for both shock and vibration testing with one provision. If needed, a backing plate may be used for vibration testing (see B.4.1).

B.6 Application notes.

B.6.1 Clamp used at primary supports. AS21919 cable clamps are being specified as part of the test fixture since these are the types of clamps used in-service.



Source: https://assist.dla.mil -- Downloaded: 2016-12-31T21:01Z
Check the source to verify that this is the current version before use.

B.6.2 Distance between secondary supports. SAE- AS50881 does not specify any distance between secondary supports. NAVAIR 01-1A-505-1/T.O. 1-1A-14-1 WP 010 00 paragraph 65 states where supports are more than 30.5 cm (12 inches) apart, space ties 30.5 cm (12 inches) or less apart. Distance between secondary supports is 7.6 cm (3 inches) for cabling installed in flight-testing applications.

B.6.3 Test fixture configuration. The same test fixture, excluding backing plate, is used for both shock and vibration testing for test consistency.

B.6.4 Cabling selection.

a. Mechanical splice clamped at primary support. Increased stiffness results in maximum transmission of the input, including those at the higher frequencies. Stiffer material and smaller diameter convoluted tubing is used to simulate the cable harness to enhance this stiffness condition.

b. Mechanical splice between primary supports. Decreased stiffness results in greater deflection and transmission of the input mostly at the lower frequencies. A section of more flexible material and larger diameter convoluted tubing is used to simulate the cable harness to enhance this stiffness condition.

B.6.5 Type of cable harness selected. Open cable bundle selected to verify that mechanical splice does not damage (cut into) the electrical cable insulation during shock and vibration events.

B.6.6 Use of standoffs or spacers. Another variable that influences the structural stiffness is the use of standoffs and spacers. The depth of these pieces should be as short as practicable to allow a 12.7 mm (.5 inch) cable deflection without contacting the backing plate. For qualification, spacers in accordance with table 3201 B-I are used at each primary support.

B.6.7 Guidance for placement into the cable clamp. Pull through cable clamp. Do not push through a cable clamp. Preference is to open the cable clamp and lay the portion of cable into the cable clamp. Material in NAVAIR 01-1A-505-4/T.O. 1-1A-14-4 WP 012 01 and WP 0140 01 were used in the preparation of B.6.7 through B.6.9.

B.6.8 Guidance for tightening cable clamp. When a cushioned clamp (clamp with rubber channel or insert) is used, then no sliding should be evident when a moderate force is applied. Clamp should be tightened such that no more pressure is exerted on the cabling than the minimum required to prevent slipping (see B.6.8b).

a. Conduit and non-metallic convoluted tubing. Tighten to constrain without constricting. Constricting the conduit or non-metallic convoluted tubing will kink the tube structure resulting in potential fiber breakage.

b. Cabling. Tighten cable clamp to the degree that the cable is snug, but to extent that cable does not deform, kink or pinch. Test cabling in the cable clamp by applying a moderate force using a side-to-side motion. When a moderate force is applied, the cabling should not slide in a cushioned cable clamp and should slide in a metal, non-cushioned cable clamp. For qualification, a cushioned cable clamp is used.

B.6.9 Guidance for tying with lacing tape. Lace or tie securely enough to support the cabling between primary supports (see B.4.3b). Extreme care should be used in tying the lacing tape to assure that the tie does not deform the cabling. Use lacing procedure specified in B.4.3c. Continuous lacing and plastic cable straps are not to be used.



Source: https://assist.dla.mil -- Downloaded: 2016-12-31T21:01Z
Check the source to verify that this is the current version before use.

MEASUREMENT 3201

APPENDIX C

RANDOM VIBRATION PROFILE

C.1. Purpose. This appendix provides a specific power spectral density versus frequency curve to use when the random vibration performed is tailored to cite this curve.

C.2. Usage. Figure 3201 C-1 is cited in some instances where random vibration is performed at ambient temperature for general aircraft applications.

C.3 Notes.

a. Origin of specific power spectral density versus frequency curve. Figure 3201 C-1 was derived from zone 2 as outlined in Aerospace Information Report AIR 1557.

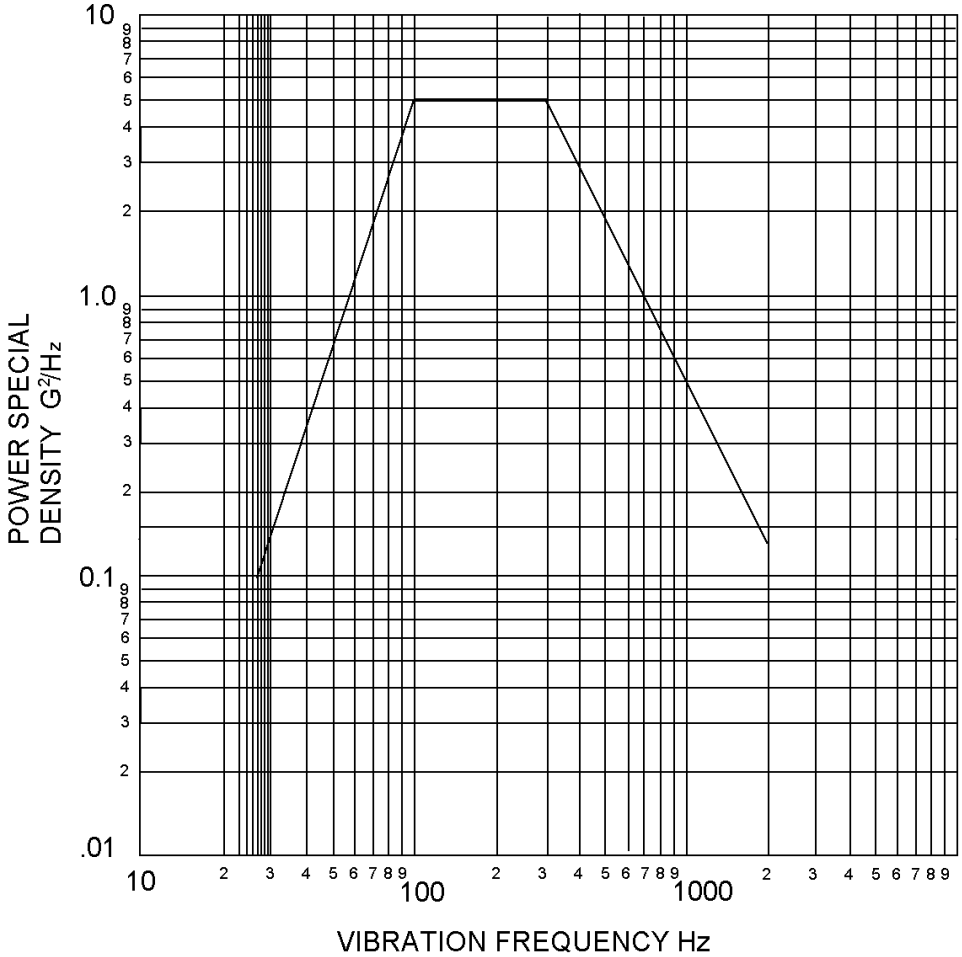


FIGURE C-1. Power spectral density versus frequency curve for random vibration.

MEASUREMENT 3201.1



Source: https://assist.dla.mil -- Downloaded: 2016-12-31T21:01Z
Check the source to verify that this is the current version before use.

MEASUREMENT 3202.1

SHOCK (MECHANICAL)

1. Purpose. This measurement is intended to supplement performing high impact mechanical shock testing on fiber optic components as specified in the applicable component military specification using the MIL-S-901 lightweight shock machine (LWSM). Shock test, as addressed in the main body of Measurement 3202, is the shock testing of a fiber optic component as part of first article testing or to the applicable component military specification as part of the process of placing a component on a Qualified Products List (QPL). Further direction is provided in appendix F with intent to supplement MIL-S-901 for performing high impact mechanical shock testing on fiber optic components depending upon type of test performed. Two of the three test types from MIL-S-901 addressed in appendix F for fiber optic components are shock testing of Principal Units (Type A) and testing at the level of a subsidiary component (Type B). This standardized approach is specified to ensure that the risk to the Government of accepting bad optical measurement data is low, to minimize test variations and to permit more accurate comparison of test results from multiple sources.

2. Applicable documents.

2.1 General. The documents listed in this section are specified in sections 3, 4, or 5 of this standard practice. This section does not include documents cited in other sections of this standard practice or recommended for additional information or as examples. While every effort has been made to ensure the completeness of this list, document users are cautioned that they must meet all specified requirements of documents cited in sections 3, 4, or 5 of this standard practice, whether or not they are listed.

2.2 Government documents.

2.2.1 Specifications, standards, and handbooks. The following specifications, standards, and handbooks form a part of this document to the extent specified herein. Unless otherwise specified, the issues of these documents are those cited in the solicitation or contract.

DEPARTMENT OF DEFENSE SPECIFICATIONS

MIL-S-901 - Shock Tests H.I. (High-impact) Shipboard Machinery, Equipment, and Systems, Requirements for.

MIL-STD-2003-4A - Electric Plant Installation Standard Methods for Surface Ships and Submarines (Cableways)

(Copies of these documents are available online at http://quicksearch.dla.mil or from the Standardization Document Order Desk, 700 Robbins Avenue, Building 4D, Philadelphia, PA 19111-5094.)

2.3 Non-Government publications. The following documents form a part of this document to the extent specified herein. Unless otherwise specified, the issues of these documents are those cited in the solicitation or contract.

TELECOMMUNICATIONS INDUSTRY ASSOCIATION

TIA/EIA-455-32 - Fiber Optic Circuit Discontinuities.

(Copies are available online at www.tiaonline.org or from Telecommunications Industry Association (TIA), 2500 Wilson Boulevard, Suite 300, Arlington VA 22201.)

2.4 Order of precedence. Unless otherwise noted herein or in the contract, in the event of a conflict between the text of this document and the references cited herein, the text of this document takes precedence. Nothing in this document, however, supersedes applicable laws and regulations unless a specific exemption has been obtained.



Source: https://assist.dla.mil -- Downloaded: 2016-12-31T21:01Z
Check the source to verify that this is the current version before use.

3. Definitions.

NOTE: Throughout MIL-STD-1678 with the exception of Measurement 3202, the test sample or fiber optic component being tested is referred to as a Device Under Test (DUT). Ship Systems Hardening Branch responsible for Shock Qualification has performed a review of Measurement 3202 in which one comment submitted was a terminology preference. This comment was to refer to the fiber optic component being tested as an "item" to be consistent with MIL-S-901. Other parties preferred the terminology be consistent throughout MIL-STD-1678. As a compromise, the term "item (DUT)" will be used in Measurement 3202 when referring to the term for the fiber optic component being tested.

3.1 Equipment class. This classification defines if resilient mounts are or are not installed within or between the item (DUT) and the ship structure or shipboard foundation.

3.2 Equipment "Class I". Class I equipment meets the shock requirements without the use of resilient mountings (between the item (DUT) and the ship structure or shipboard foundation). Unless otherwise specified, fiber optic components are considered as class I equipment.

3.3 Equipment "Class II". Class II equipment meets the shock requirements with the use of resilient mountings.

3.4 Equipment "Class III". Class III equipment meets the shock requirements with and without the use of resilient mountings (thereby required to meet both Class I and Class II requirements).

3.5 Equipment "Combined class I/II". Combined class I/II equipment shares characteristics of both class I and class II equipment. It is defined as equipment that has some parts that are required to meet the shock requirements without the use of resilient mountings (Class I) and other parts that are required to meet the shock requirements with the use of resilient mountings (Class II).

3.6 Shock grade. This classification defines the shock resistance of an item (DUT) by one of two shock grades, A or B.

3.7 Shock "Grade A". The item (DUT) is essential to the safety and continued combat capability of the ship. The requirements for the pass/fail criteria specified above are to meet grade A. In general, shock testing or design of a grade A item (DUT) will demonstrate that the item (DUT) will continue to perform its principal function without significant degradation in performance, and that no portion of the item (DUT) will come adrift or otherwise become a hazard during and following application of shock loadings.

3.8 Shock "Grade B". Grade B items (DUT) are items whose operation is not essential to the safety and combat capability of the ship but which could become a hazard to personnel, to grade A items (DUT), or to the ship as a whole as a result of exposure to shock. Failure of a grade B item (DUT) to perform its principal function after shock will not be cause for rejection. Hazards are defined in 6.6.6 of MIL-S-901.

3.9 Shock test categories. Test category refers to the type of shock machine or platform in which the test is done. Unless otherwise specified, a lightweight test is performed (on a lightweight shock machine) in accordance with MIL-S-901 for testing of fiber optic components. Other categories are medium weight (using a medium weight shock machine) and heavyweight (using a floating shock platform). Measurement 3202 is written on the premise that a lightweight test is performed. Size, weight and deflection constraints may negate the use of a lightweight shock test.

3.10 Shock test type. This classification identifies the type of tests performed.

3.11 Shock test "Type A". The type A test is a test of a principal unit. Principal units are directly attached to the ship structure or mounted in systems (such as piping and ducting) that are supported by the ship structure.

3.12 Shock test "Type B". The type B test is a test of a subsidiary component. Subsidiary components are items that are the major parts of a principal unit.

3.13 Shock test "Type C". The type C test is a test of a subassembly. Subassemblies are items that are a part of a principal unit or a subsidiary component.



Source: https://assist.dla.mil -- Downloaded: 2016-12-31T21:01Z
Check the source to verify that this is the current version before use.

4. Setup.

4.1 Generic representation. See MIL-STD-1678-4, "General Requirements" for test sample configuration.

4.1.1 Instrumentation. Refer to Measurements 2102 and 2104 of MIL-STD-1678-2 for setups pertaining to Change in Optical Transmittance and for Optical Signal Discontinuity, respectively.

4.1.2 Single ferrule connectors. See figure 3202-1 for connector placement and routing. Refer to 4.2.8.a for further details.

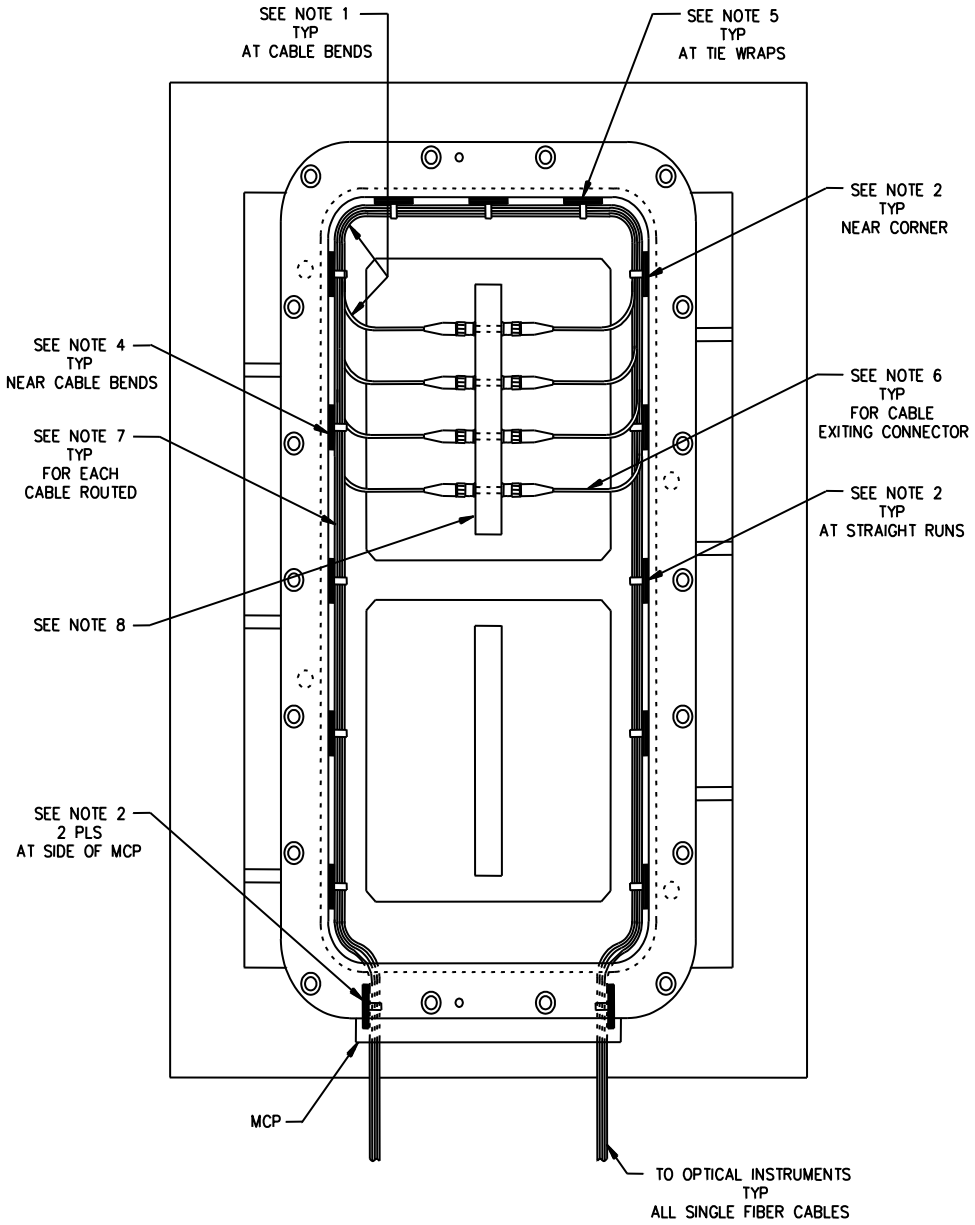


FIGURE 3202-1. Supplemental test fixture with single ferrule connectors: cable routing and tie-downs.
MEASUREMENT 3202.1



Source: https://assist.dla.mil -- Downloaded: 2016-12-31T21:01Z
Check the source to verify that this is the current version before use.

NOTES:

1. Maintenance of bend diameter. Each cable bend shall not exceed the long term, minimum bend diameter of cable inside the interconnection box.
2. Mounting of tie wrap holders. On the inside of the interconnection box, tie wrap holders are to be placed as shown around the sides of the box. Place a tie wrap holder near the corners of the box, near cable bends and towards the middle for lengths of straight runs (about three on the top, four to five on both the left and right sides, and one on each side of the MCP). Tie wrap holders must be secured in place using epoxy. The adhesive on the tie wrap holder is not adequate to secure the tie wrap during the shock.
3. Type of tie wrap holder. Use the following type tie wrap holder or equivalent: Mounting base, tie down, electrical, Thomas & Bettz P/N TC5347A. Four way configuration (versus two way) and with adhesive is optional.
4. Type of tie wrap. For most applications, 101.6 mm (4-inch) long tie wraps are used. SAE-AS33671 electrical tie down straps, adjustable, plastic, type I, class 1, miniature, 80.1 N (18 lb.) minimum tensile strength (such as P/N MS3367-4-9, NSN 5975-00-727-5153 or P/N MS3367-4-0, NSN 5975-00-903-2284) or other equivalent commercial self-locking cable ties.
5. Degree of tightness. Tie wraps are to be snug so that movement of the cable is restricted, but tie wrap exerts no to minimum pressure on the cables.
6. Straighten cable at exit to connector. Cable that is exiting the connector is to be kept straight to maximum length practical before placement into the first bend while still maintaining requirement stated in note 1.
7. The cable from each single ferrule connector shall be routed within the interior, using tie wraps and tie wrap holders, such that each cable is routed at least three-quarters around the interior of the supplemental test fixture.
8. Patch panels, single ferrule connector supplemental fixture. A MIL-PRF-24728/6 patch panel (for an ST connector) or a MIL-PRF-24728/6 style patch panel (for other single terminus connectors) shall be mounted on the supplemental fixture standard mounting plate (see table 3202-1). The blank patch panel shall be used with the appropriate cutouts made for single ferrule connectors not listed. The appropriate adapter (such as a ST-to-ST adapter for a ST connector) shall be affixed to the patch panel.
9. Dimensions are in inches, metric equivalents (mm) in parenthesis are given for general information only.
10. Location to place single ferrule connectors being optically monitored on the patch panel during shock testing. Since only four channels are required to be monitored for optical signal discontinuity, the intent is to have consistency (reduce variability). Connectors shall be placed on same horizontal row (sometimes spaced one port hole apart to mate/de-mate/check after each impact (if required) more easily). Mount other connectors (if used) vertically, below/above middle row of horizontal connectors. This "cluster" is done over placing some in corners along mounting brackets (for more transmitted force) and some in corners opposite mounting brackets (for more deflection).

FIGURE 3202-1. Supplemental test fixture with single ferrule connectors: cable routing and tie-downs - Continued.



Source: https://assist.dla.mil -- Downloaded: 2016-12-31T21:01Z
Check the source to verify that this is the current version before use.

TABLE 3202-I. Patch panels for shock test use.

| Description | CAGE code | Part number |
|---|---|---|
| ST-to-ST adapter patch panel in accordance with M24728/06-001 | 44291 | 11254-101 |
| SC-to-SC adapter patch panel, 54 ports, M24728/1 to M24728/3 compatible, without silk screened characters and with captive panel screws | 44291 | 10909 MOD4 |
| SC-to-SC adapter patch panel, 54 ports, M24728/1 to M24728/3 compatible, with silk screened characters and with captive panel screws | 44291 | 10914 MOD4 |
| LC-to-LC adapter patch panel, 48 duplex ports, M24728/1 to M24728/3 compatible, without silk screened characters and with captive panel screws | 44291 | 10909 MOD7 |
| LC-to-LC adapter patch panel, 48 duplex ports, M24728/1 to M24728/3 compatible, with silk screened characters and with captive panel screws | 44291 | 10914 MOD7 |
| Patch panel, blank (without ports or silk screened characters), M24728/1 to M24728/3 compatible, with captive panel screws (NOTE: user must machine in port configuration for connector being tested) | 44291 | |
| Fusion splice tray and tray holder module, fiber optic, MIL-PRF-24728/8 | 44291 | 12485-101 |

4.1.3 Multiple termini connectors. See figure 3202-2 and figure 3202-3 for connector placement and routing. Refer to 4.2.8.b for further details.

MEASUREMENT 3202.1



Source: https://assist.dla.mil -- Downloaded: 2016-12-31T21:01Z
Check the source to verify that this is the current version before use.

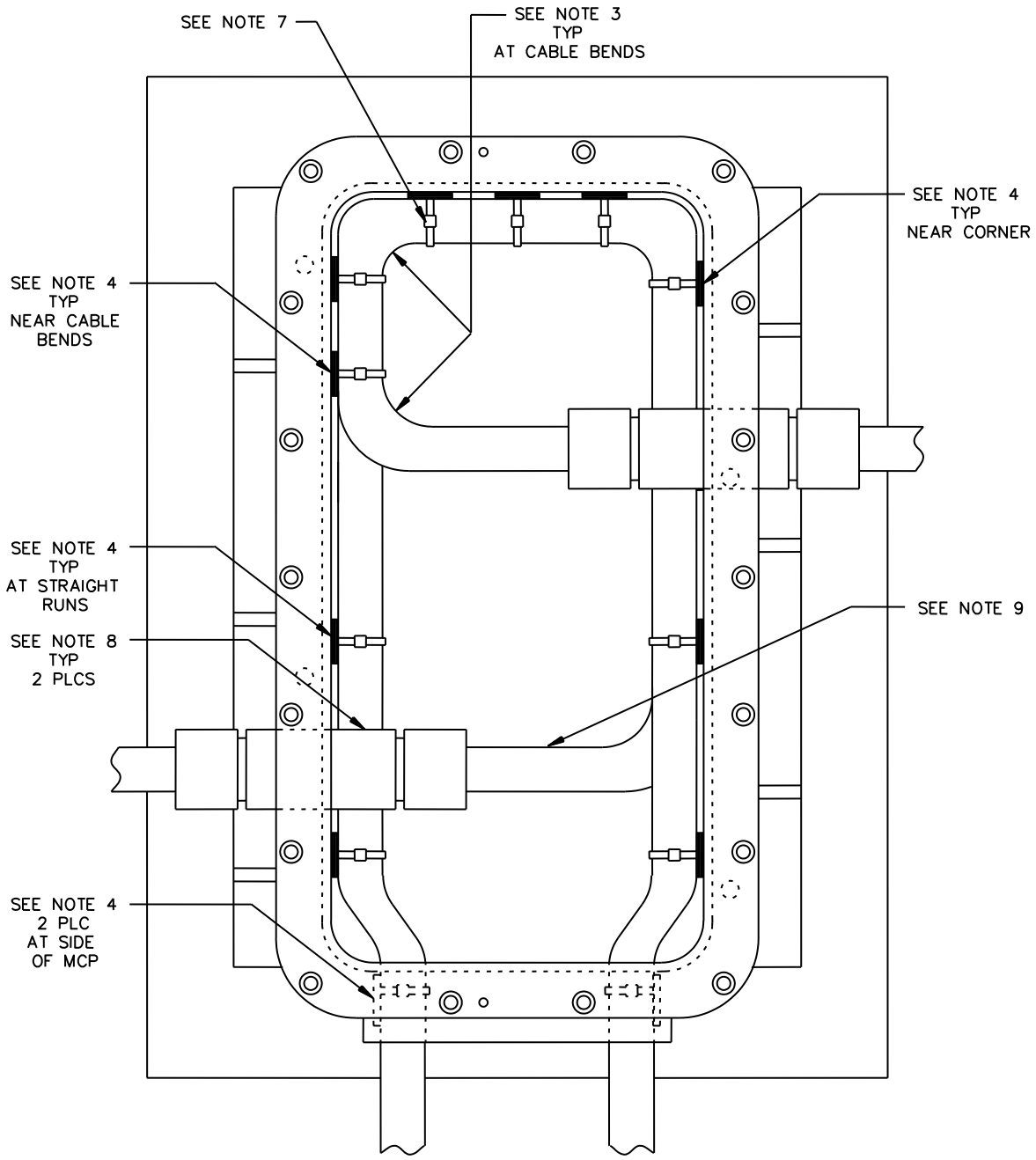


FIGURE 3202-2 Supplemental test fixture with multiple terminus connectors: cable routing and tie-downs, smaller cable diameter.



Source: https://assist.dla.mil -- Downloaded: 2016-12-31T21:01Z
Check the source to verify that this is the current version before use.

NOTES:

1. Test fixture applicability. If 13.5 – B $\leq$ 3 where "B" is in inches, use supplemental test fixture in figure 3202-3 (See note 2).
2. Bend diameter. B = Long term, minimum bend diameter of cable under test.
3. Maintenance of bend diameter. Each cable bend is not to exceed (be smaller than) the long term, minimum bend diameter of cable inside the interconnection box.
4. Mounting of tie wrap holders. On the inside of the interconnection box, tie wrap holders are to be placed as shown around the sides of the box. Place a tie wrap holder near the corners of the box, near cable bends and towards the middle for lengths of straight runs (about three on the top, four to five on both the left and right sides, and one on each side of the MCP). Tie wrap holders must be secured in place using epoxy. The adhesive on the tie wrap holder is not adequate to secure the tie wrap during the shock.
5. Type of tie wrap holder. Use the following type tie wrap holder or equivalent: Mounting base, tie down, electrical, Thomas & Bettz P/N TC5347A. Four way configuration (versus two way) and with adhesive are optional.
6. Type of tie wrap. For most applications, 101.6 mm (4-inch) long tie wraps are used. SAE-AS33671 electrical tie down straps, adjustable, plastic, type I, class 1, miniature, 80.1 N (18 lb.) minimum tensile strength (such as P/N MS3367-4-9, NSN 5975-00-727-5153 or P/N MS3367-4-0, NSN 5975-00-903-2284) or other equivalent commercial self-locking cable ties.
7. Degree of tightness. Tie wraps are to be snug so that movement of the cable is restricted, but tie wrap exerts no to minimum pressure on the cables.
8. Connector receptacle mounted to side from inside the interconnection box.
9. Straighten cable at exit to connector. Cable that is exiting the connector is to be kept straight to maximum length practical before placement into the first bend while still maintaining requirement stated in note 3.
10. Dimensions are in inches, metric equivalents (mm) in parenthesis are given for general information only.

FIGURE 3202-2 Supplemental test fixture with multiple terminus connectors: cable routing and tie-downs, smaller cable diameter - Continued.



Source: https://assist.dla.mil -- Downloaded: 2016-12-31T21:01Z
Check the source to verify that this is the current version before use.

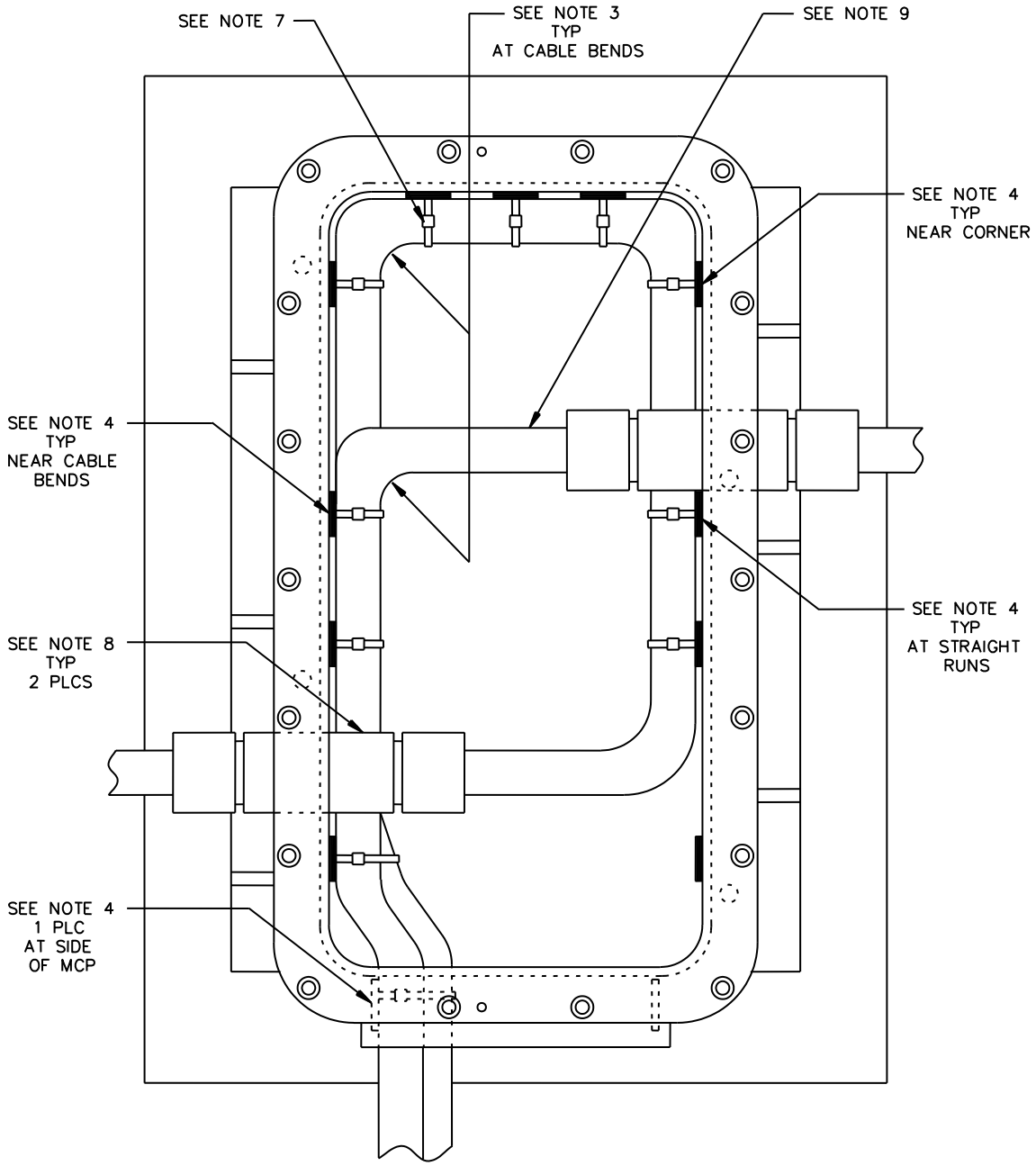


FIGURE 3202-3 Supplemental test fixture with multiple terminus connectors: cable routing and tie-downs, larger cable diameter.

MEASUREMENT 3202.1



Source: https://assist.dla.mil -- Downloaded: 2016-12-31T21:01Z
Check the source to verify that this is the current version before use.

NOTES:

1. Test fixture applicability. If 13.5 – B > 3 where “B” is in inches, use supplemental test fixture in figure 3202-2 (See note 2).
2. Bend diameter. B = Long term, minimum bend diameter of cable under test.
3. Maintenance of bend diameter. Each cable bend is not to exceed (be smaller than) the long term, minimum bend diameter of cable inside the interconnection box.
4. Mounting of tie wrap holders. On the inside of the interconnection box, tie wrap holders are to be placed as shown around the sides of the box. Place a tie wrap holder near the corners of the box, near cable bends and towards the middle for lengths of straight runs (about three on the top, four to five on both the left and right sides and one on each side of the MCP). Tie wrap holders must be secured in place using epoxy. The adhesive on the tie wrap holder is not adequate to secure the tie wrap during the shock.
5. Type of tie wrap holder. Use the following type tie wrap holder or equivalent: Mounting base, tie down, electrical, Thomas & Bettz P/N TC5347A. Four way configuration (versus two way) and with adhesive are optional.
6. Type of tie wrap. For most applications, 4-inch (101.6 mm) long tie wraps are used. SAE-AS33671 electrical tie down straps, adjustable, plastic, type I, class 1, miniature, 18 lb. (80.1 N) minimum tensile strength (such as P/N MS3367-4-9, NSN 5975-00-727-5153 or P/N MS3367-4-0, NSN 5975-00-903-2284) or other equivalent commercial self-locking cable ties.
7. Degree of tightness. Tie wraps are to be snug so that movement of the cable is restricted, but tie wrap exerts no to minimum pressure on the cables.
8. Connector receptacle mounted to side from inside the interconnection box.
9. Straighten cable at exit to connector. Cable that is exiting the connector is to be kept straight to maximum length practical before placement into the first bend while still maintaining requirement stated in note 3.
10. Dimensions are in inches, metric equivalents (mm) in parenthesis are given for general information only.

FIGURE 3202-3 Supplemental test fixture with multiple terminus connectors: Cable routing and tie-downs, larger cable diameter - Continued.



Source: https://assist.dla.mil -- Downloaded: 2016-12-31T21:01Z
Check the source to verify that this is the current version before use.

4.1.4 Cable. See figures 3202-4 and 3202-5 for cable placement and routing. Refer to 4.2.8.c for further details.

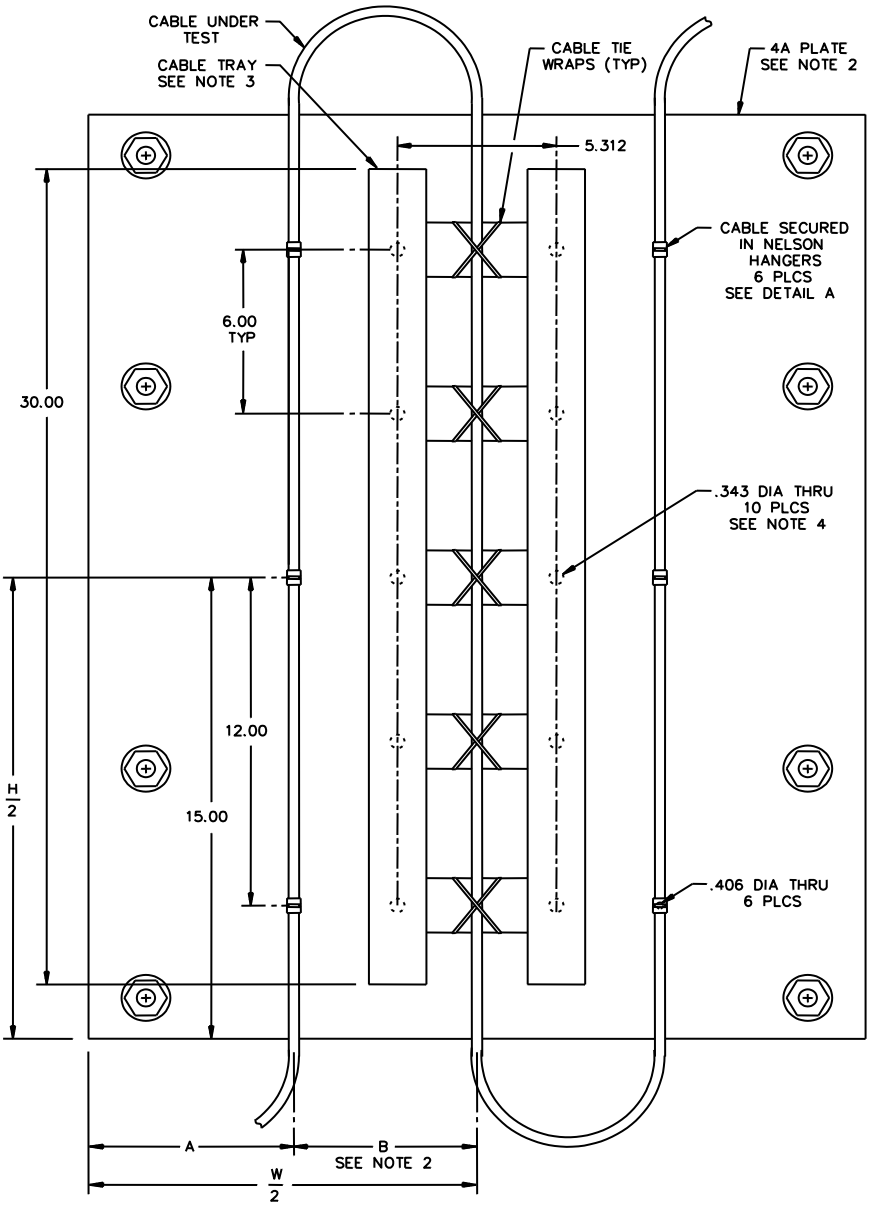


FIGURE 3202-4: Supplemental test fixture for cable of small diameter.



Source: https://assist.dla.mil -- Downloaded: 2016-12-31T21:01Z
Check the source to verify that this is the current version before use.

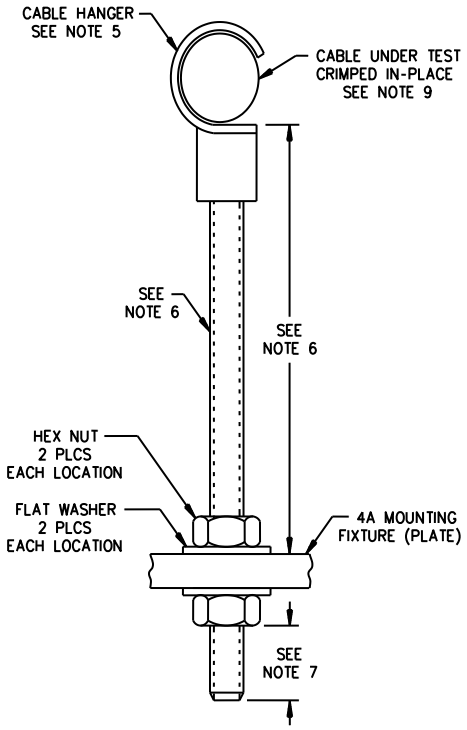


DETAIL A

NOTES:

1. If W/2 – B ≤ 3, use supplemental test fixture in figure 3202-5 (See note 2).
2. B = Long term, minimum bend diameter of cable under test. W = 27 inch, using 4A mounting fixture (plate) with standard width in accordance with MIL-S-901.
3. Metallic cable tray system, straight section, 3 inch (76.2 mm) NEMA/4.20 inch outside, 9 inch (228.6 mm) rung spacing, 12 inch (304.8 mm) width, aluminum, Cooper B-Line Product Catalog # 34A09-12-240 (where 240 is for 20 ft. (6.1 m) section) or equivalent cable tray.
4. Cable tray mounting holes. Minimum size to be used for mounting hardware is 7.9 mm (5/16 inch) diameter.
5. Single cable hanger, Nelson CrimpLoc style, Nelson Stud Welding, Inc. Part # SL091AA-TXL where AA is to be replaced by the designators for the applicable cable diameter or equivalent single cable hanger.
6. Use 3/8-16 all-thread (B7 or B16) for raising the single cable hanger to the same height as the cable tray, typically 4.13 inch (104.9 mm) for dimension shown. See detail A for installation.
7. Protruding thread length, 3 threads minimum.
8. Dimensions are in inches, metric equivalents (mm) in parenthesis are given for general information only.
9. Degree of tightness: Cable shall be crimped into cable hanger in a manner that the cable is snug (movement restricted, but cable hanger exerts no to minimum pressure on the cable). Additional guidance may be obtained in MIL-STD-2003-4 (such as figure 4C7).
10. Recommended cable hanger crimping instructions. Use channel-lock pliers to compress the clip portion of the cable hanger. Start by gripping both the tip (the open end or the fingers) and the base of the cable clamp with the channel-lock pliers: Squeeze pliers to close the hanger until it contacts the cable jacket. Then, use the pliers as necessary to close/form the fingers so that the hanger conforms to the cable outside diameter and clamps evenly around the circumference without crushing the cable jacket. Degree of tightness to achieve is stated in note 9.

FIGURE 3202-4: Supplemental test fixture for cable of small diameter - Continued.

MEASUREMENT 3202.1



Source: https://assist.dla.mil -- Downloaded: 2016-12-31T21:01Z
Check the source to verify that this is the current version before use.

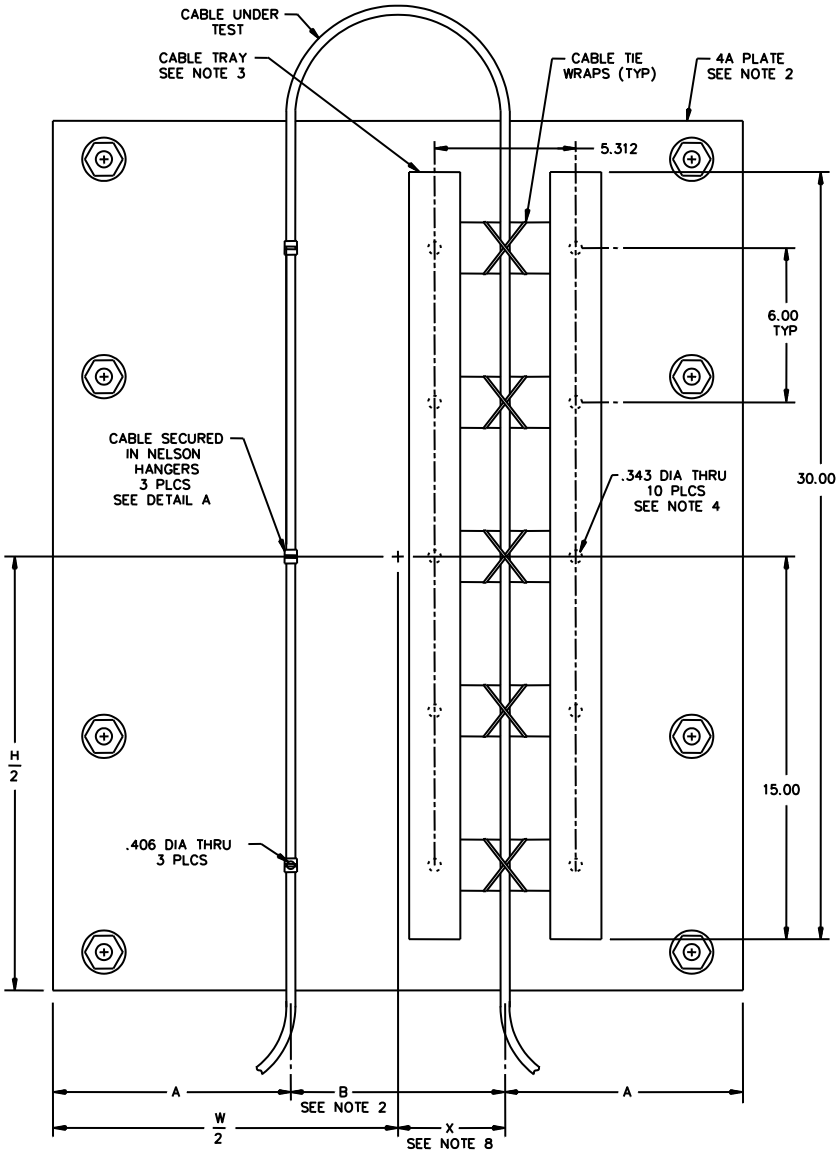


FIGURE 3202-5: Supplemental test fixture for cable of large diameter.



Source: https://assist.dla.mil -- Downloaded: 2016-12-31T21:01Z
Check the source to verify that this is the current version before use.

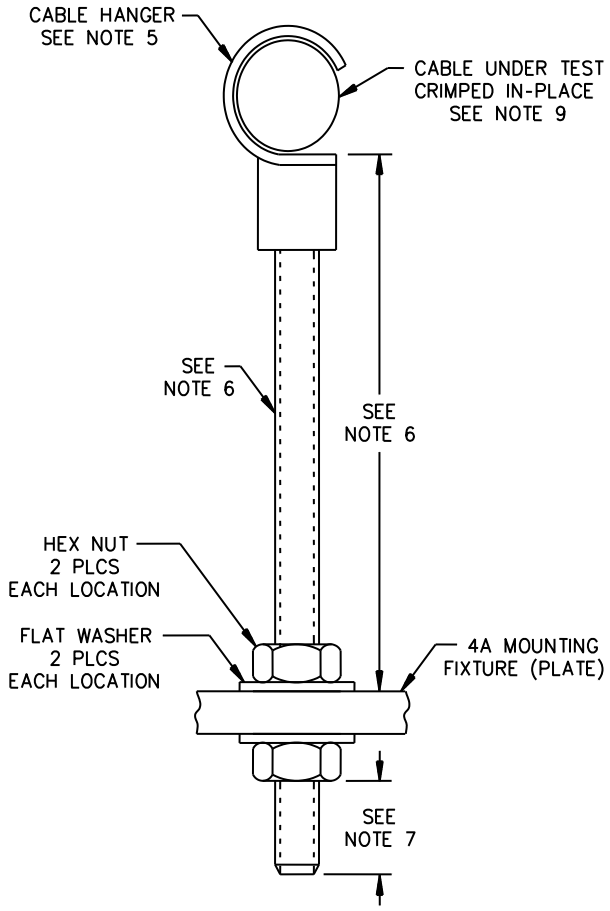


DETAIL A

NOTES:

1. If W/2 – B > 3, use supplemental test fixture in figure 3202-4 (See note 2).
2. B = Long term, minimum bend diameter of cable under test. W = 27 inch (685.8 mm), using 4A mounting fixture (plate) with standard width in accordance with MIL-S-901.
3. Metallic cable tray system, straight section, 3 inch (76.2 mm) NEMA/4.20 inch (508 mm) outside, 9 inch (228.6 mm) rung spacing, 12 inch (304.8 mm) width, aluminum, Cooper B-Line Product Catalog # 34A09-12-240 (where 240 is for 20 ft. (6.1 m) section) or equivalent cable tray.
4. Cable tray mounting holes. Minimum size to be used for mounting hardware is 5/16 diameter.
5. Single cable hanger, Nelson CrimpLoc style, Nelson Stud Welding, Inc. Part # SL091AA-TXL where AA is to be replaced by the designators for the applicable cable diameter or equivalent single cable hanger.
6. Use 3/8-16 all-thread (B7 or B16) for raising the single cable hanger to the same height as the raceway, typically 4.13 inch (104.9 mm) for dimension shown. See detail A for installation.
7. Protruding thread length, 3 threads minimum.
8. Center dimension B on vertical centerline of the 4A plate so that W = B + 2A (See note 2).

FIGURE 3202-5: Supplemental test fixture for cable of large diameter - Continued.

MEASUREMENT 3202.1



Source: https://assist.dla.mil -- Downloaded: 2016-12-31T21:01Z
Check the source to verify that this is the current version before use.

NOTES - Continued:

9. Degree of tightness: Cable shall be crimped into cable hanger in a manner that the cable is snug (movement restricted, but cable hanger exerts no to minimum pressure on the cable). Additional guidance may be obtained in MIL-STD-2003-4 (such as figure 4C7).
10. Recommended cable hanger crimping instructions. Use channel-lock pliers to compress the clip portion of the cable hanger. Start by gripping both the tip (the open end or the fingers) and the base of the cable clamp with the channel-lock pliers: Squeeze pliers to close the hanger until it contacts the cable jacket. Then, use the pliers as necessary to close/form the fingers so that the hanger conforms to the cable outside diameter and clamps evenly around the circumference without crushing the cable jacket. Degree of tightness to achieve is stated in note 9.
11. Dimensions are in inches, metric equivalents (mm) in parenthesis are given for general information only.

FIGURE 3202-5: Supplemental test fixture for cable of large diameter - Continued.

4.2 Test equipment (for MIL-S-901, Lightweight and Medium Weight Shock Test).

4.2.1 MIL-S-901 Shock Machines. Shock machines used must be one on the approved list in enclosure (1) to NAVSEAINST 9491.1D, Location of Approved Class Hi Shock Testing Facilities. Approval is performed by NSWCCD-SSES Code 669.

4.2.2 Deflection capability. Unless otherwise specified, equipment shall be hard mounted (Class I equipment). Items (DUT) shall not be affixed in a manner that allows a deflection that is greater than 1.5 inches for a test performed on a MIL-S-901 lightweight shock machine.

a. Deflection capability greater than 1.5 inches. Equipment which would normally be tested on the lightweight shock machine but which is mounted on or incorporates resilient mounts or flexible mounting elements which have deflection capability under shock loading of 1.5 inches (38.1 mm) or more in any direction shall instead be subject to medium weight or heavyweight shock testing. Refer to 4.2.2c and MIL-S-901 for prohibitions on class II deck mounted equipment and other configurations from being tested on the LWSM.

b. Deflection capability greater than 3.0 inches (76.2 mm). Equipment which would normally be tested on the medium weight shock machine, but which is mounted on or incorporates resilient mounts or flexible mounting elements which have deflection capability under shock loading in excess of 3 inches (76.2 mm) in any direction, shall instead be subject to heavy weight shock testing.

c. Deflection capability for deck mounted class II and class I/II equipment. There are two conditions that must be met that determine whether a class II or a class I/II piece of equipment can be tested on a lightweight or on a medium weight shock test machine. Condition one, equipment is hull mounted, and condition two, the resilient mounts have a deflection capability under shock loading no greater than one and a half (1.5) inches (38.1 mm) in any direction for a lightweight shock machine or three (3) inches (76.2 mm) in any direction for a medium weight shock machine.

(1) Hull mounted. Standard shock machine mounting test fixtures are intended to represent hull mounted conditions, and are typically stiffer than would be required to simulate deck mounted conditions. Use of standard lightweight and medium weight shock machine mounting fixtures for tests of deck mounted items is acceptable for class I tests only. Unless justification can be provided that demonstrates the lightweight or medium weight shock machine test fixture provides an acceptable test environment, heavyweight testing is recommended in cases where simulation of deck mounted conditions is desired.

(2) Deflection capability. The stiffest (hardest) condition is not necessarily the most severe for class II or class I/II equipment. A low frequency deck mounted shock environment aboard ship may result in dynamic amplification of the frequency shock mounts causing the mounts to bottom and imparting a more severe shock environment than that imparted by the relatively high frequency hull mounted lightweight shock machine shock environment.

MEASUREMENT 3202.1



Source: https://assist.dla.mil -- Downloaded: 2016-12-31T21:01Z
Check the source to verify that this is the current version before use.

(3). References. NSWCCD-SSES letter 9702 Ser 05P3/047 of 9 April 2003 shall be used in reference to clarification and technical guidance for the interpretation of shock test requirements to MIL-S-901 concerning equipment categorized as class I/II. Unless approved by NAVSEA 05P13, for shock qualification (see appendix F), deck mounted equipment shall not be tested on the LWSM or MWSM.

4.2.3 Weight. Weight of test sample and fixtures, excluding anvil plate, must not exceed 300 pounds (1334.5 N). Note that some ship classes are more restrictive than the general requirement of not exceeding 550 pounds (2446.5 N) in accordance with 3.1.2 of MIL-S-901. The equipment (item or DUT) weight shall not exceed 200 pounds (889.6 N). Weight of item (DUT) and fixtures for principal units testing is addressed in F.3.2 and F.3.3 (see table 3202-FI) in appendix F.

4.2.4 Mounting fixture. Unless otherwise specified, a MIL-S-901 Fixture 4A (0.5 inch (12.7 mm) thick auxiliary mounting panel) shall be used to attach the item (DUT) (or the item (DUT) mounted to supplemental fixtures) to the anvil plate. Width of the Fixture 4A may be increased from the standard width of 27 inches (685.8 mm) to a maximum of 36 inches (914.4 mm). This width is to be increased only to the extent required for larger equipment. When specified, the following mounting fixtures shown in figures 7 through 12 of MIL-S-901 are acceptable for use: 4C, 6D-1, 6D-2, 6E, 11C (see table 3202-II).

TABLE 3202-II. LWSM standard mounting fixtures.

| Lightweight shock machine (LWSM) standard mounting fixtures | | |
|---|---|---|
| Mounting fixture | Item (DUT) mounting plane | Comments |
| 4A | Back | Use, unless otherwise specified |
| 4C | Base | |
| 6D-1 | Panel | |
| 6D-2 | Panel | Use only if specified and 6D-1 not applicable |
| 6E | Controller components | For contactors and relays. |
| 11C | Base | |

4.2.5 Spacers. For each bolt size, the spacers with the outside diameter and thickness shown in table 3202-III shall be used to secure the item (DUT) or supplemental fixtures containing the item (DUT) to the mounting fixture. One spacer is used for each mounting bolt.

TABLE 3202-III. Spacer for mounting fixture.

| Bolt size | Outside diameter | Thickness |
|---|---|---|
| 1/4 | 3/4 | 3/8 |
| 5/16 | 3/4 | 3/8 |
| 3/8 | 7/8 | 3/8 |
| 1/2 | 1-1/4 | 1/2 |
| 5/8 | 1-1/2 | 5/8 |
| 3/4 | 1-3/4 | 3/4 |

4.2.6 Resilient mounts. Unless otherwise specified, items (DUT) shall be hard mounted. Items (DUT) that are normally installed with mounts shall be shock tested on their mounts. Refer to 4.2.2 through 4.2.2.c for limitations.

MEASUREMENT 3202.1



Source: https://assist.dla.mil -- Downloaded: 2016-12-31T21:01Z
Check the source to verify that this is the current version before use.

4.2.7 Retention of position. Once the item (DUT) has been mounted/positioned for test upon a fixture, its position shall not be changed during the course of the test. The same item (DUT) shall be subjected to each series of nine impacts.

4.2.8 Supplemental fixtures. For consistency in testing, supplemental fixtures are standardized for shock testing of fiber optic connectors and cables. Supplemental fixtures are those fixtures that hold the item (DUT) and fasten to a mounting fixture (such as a MIL-S-901 fixture 4A).

a. Single ferrule connector supplemental fixture. Single ferrule connectors shall be tested using a modified MIL-PRF-24728/2 interconnection box as shown in figure 3202-6 as the supplemental fixture. A MIL-PRF-24728/6 patch panel (for an ST connector) or a MIL-PRF-24728/6 style patch panel (for other single terminus connectors) shall be mounted on the interconnection box standard mounting plate (see table 3202-I). The appropriate adapter (such as a ST-to-ST adapter for a ST connector) shall be affixed to the patch panel. The cable, from each single ferrule connector, shall be routed within the interior, using tie wraps and tie wrap holders, such that each cable is routed at least three-quarters around the interior of the supplemental test fixture.



Source: https://assist.dla.mil -- Downloaded: 2016-12-31T21:01Z
Check the source to verify that this is the current version before use.

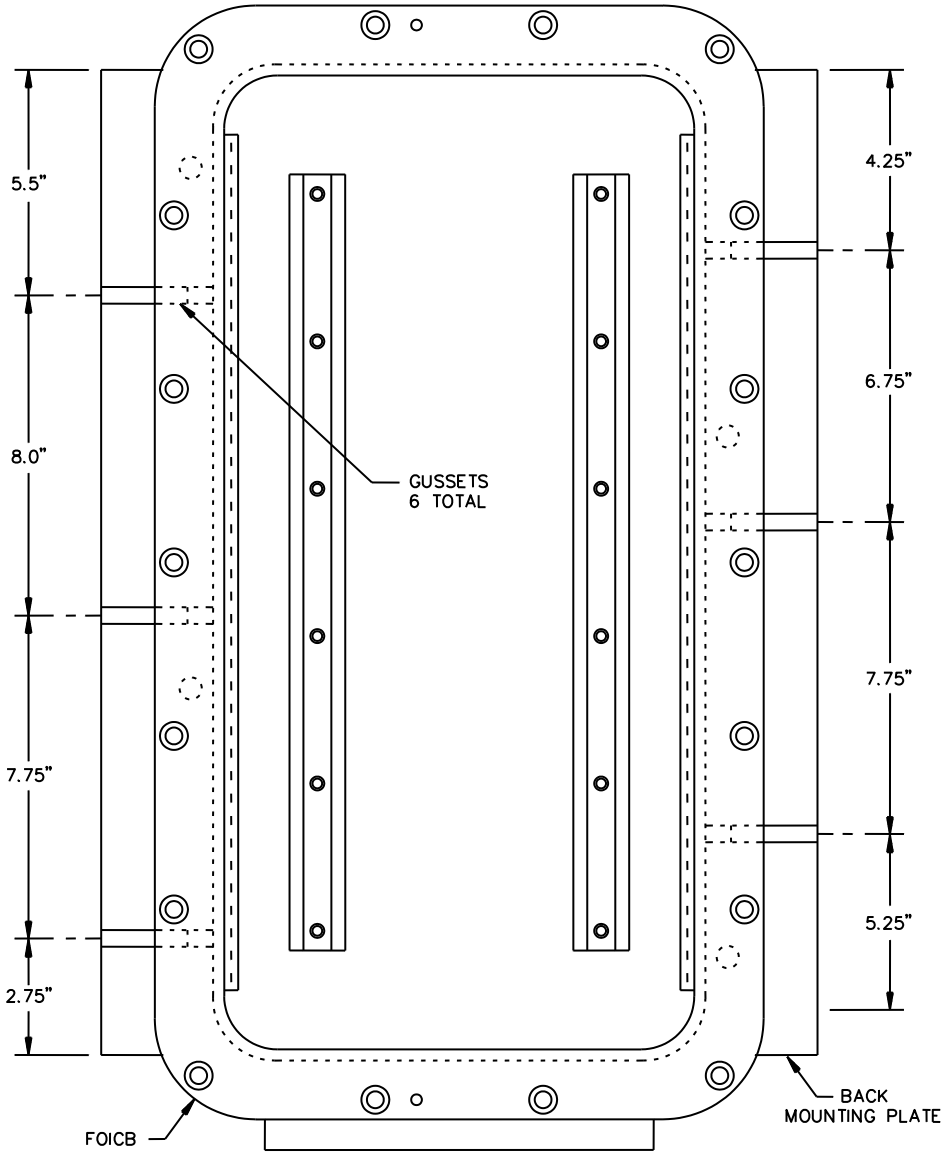


FRONT VIEW

NOTES:
1. Dimensions are in inches.
2. Metric equivalents are given for general information only.

| Inches | mm |
|---|---|
| 2.75 | 69.85 |
| 4.25 | 107.95 |
| 5.25 | 133.35 |
| 5.50 | 139.70 |
| 6.75 | 171.45 |
| 7.75 | 196.85 |
| 8.00 | 203.20 |

FIGURE 3202-6: Supplemental fixture for connectors, fabrication drawing.

MEASUREMENT 3202.1



Source: https://assist.dla.mil -- Downloaded: 2016-12-31T21:01Z
Check the source to verify that this is the current version before use.

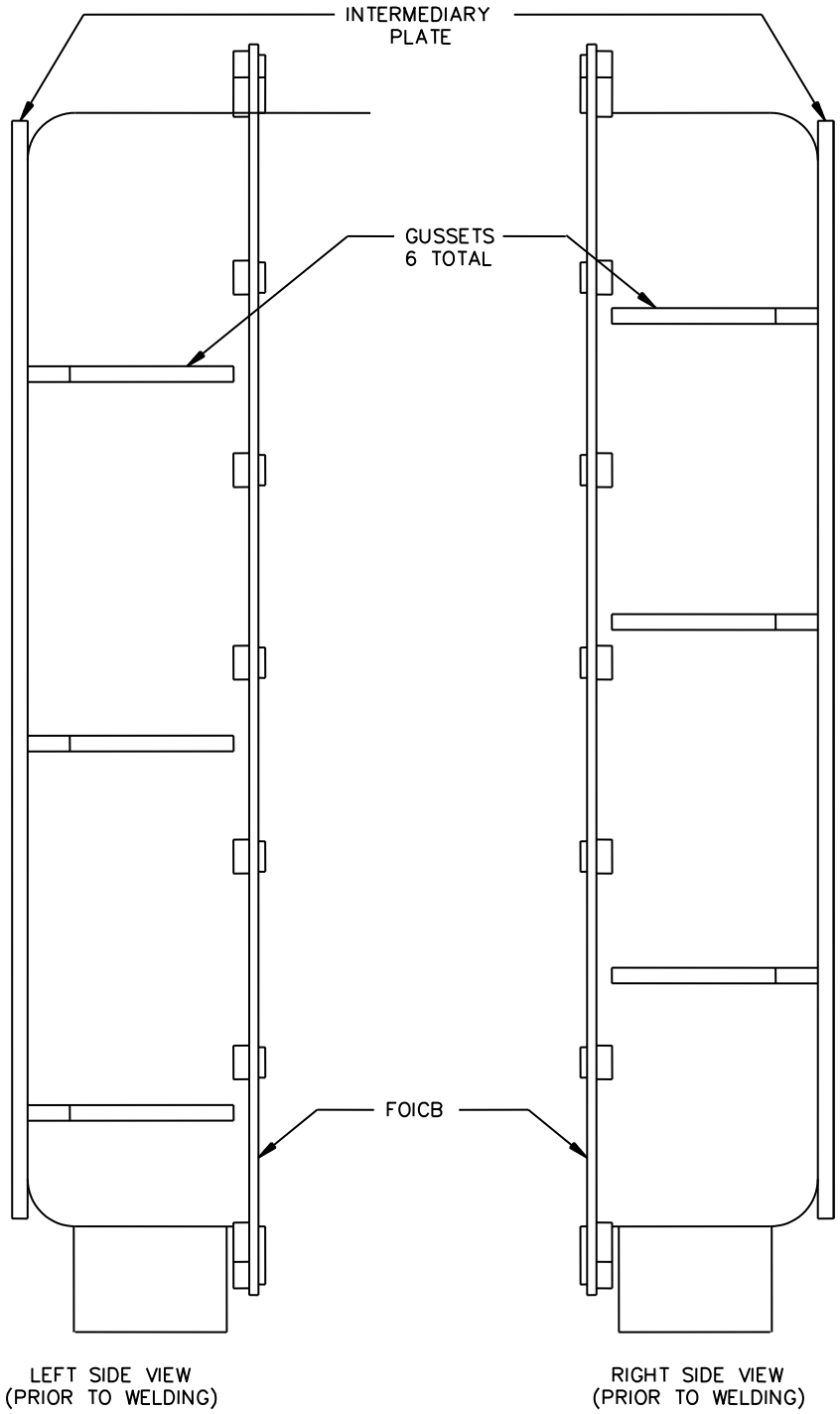


FIGURE 3202-6: Supplemental fixture for connectors, fabrication drawing - Continued.

MEASUREMENT 3202.1



Source: https://assist.dla.mil -- Downloaded: 2016-12-31T21:01Z
Check the source to verify that this is the current version before use.

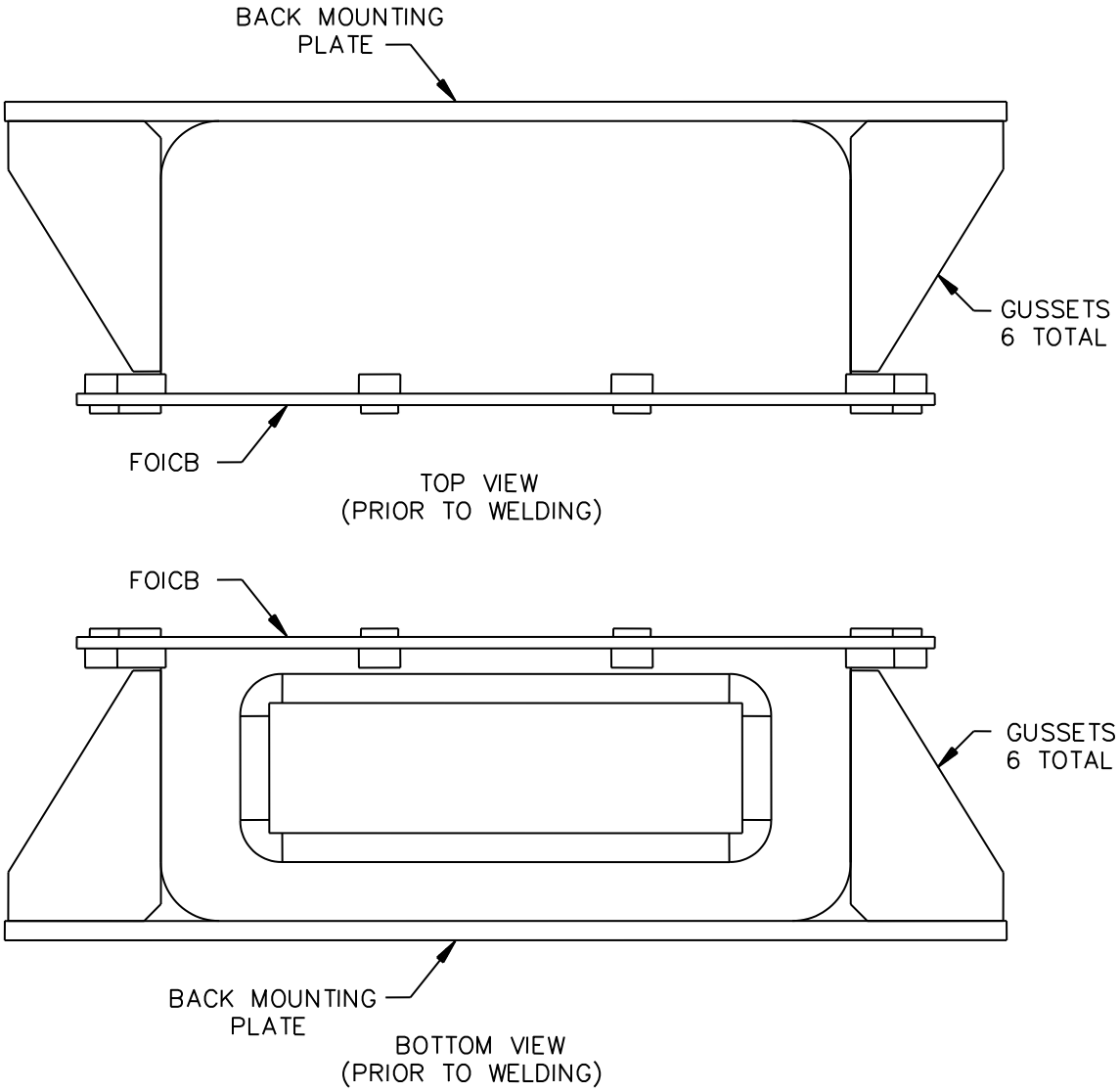


FIGURE 3202-6: Supplemental fixture for connectors, fabrication drawing - Continued.



Source: https://assist.dla.mil -- Downloaded: 2016-12-31T21:01Z
Check the source to verify that this is the current version before use.

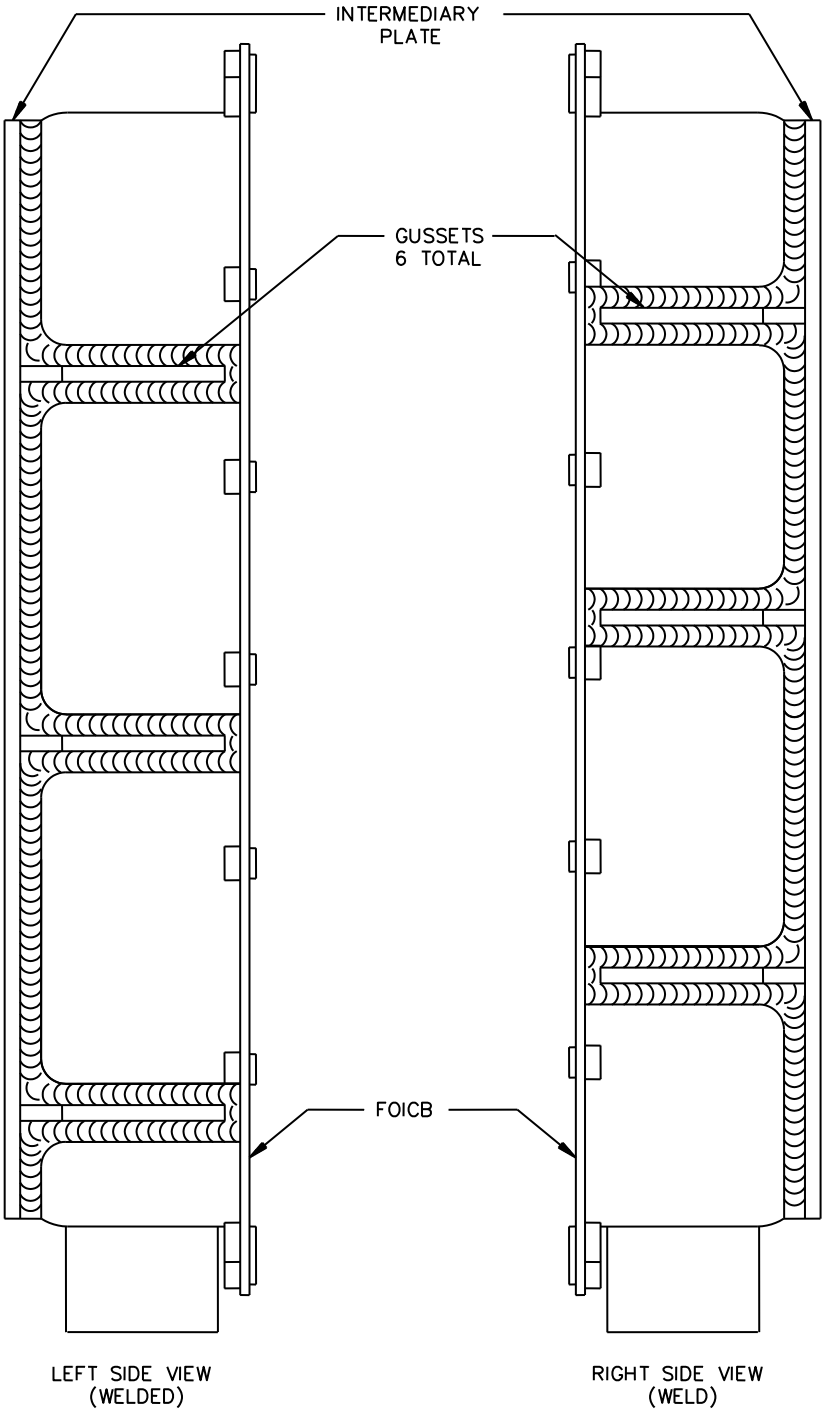


FIGURE 3202-6: Supplemental fixture for connectors, fabrication drawing - Continued.



Source: https://assist.dla.mil -- Downloaded: 2016-12-31T21:01Z
Check the source to verify that this is the current version before use.

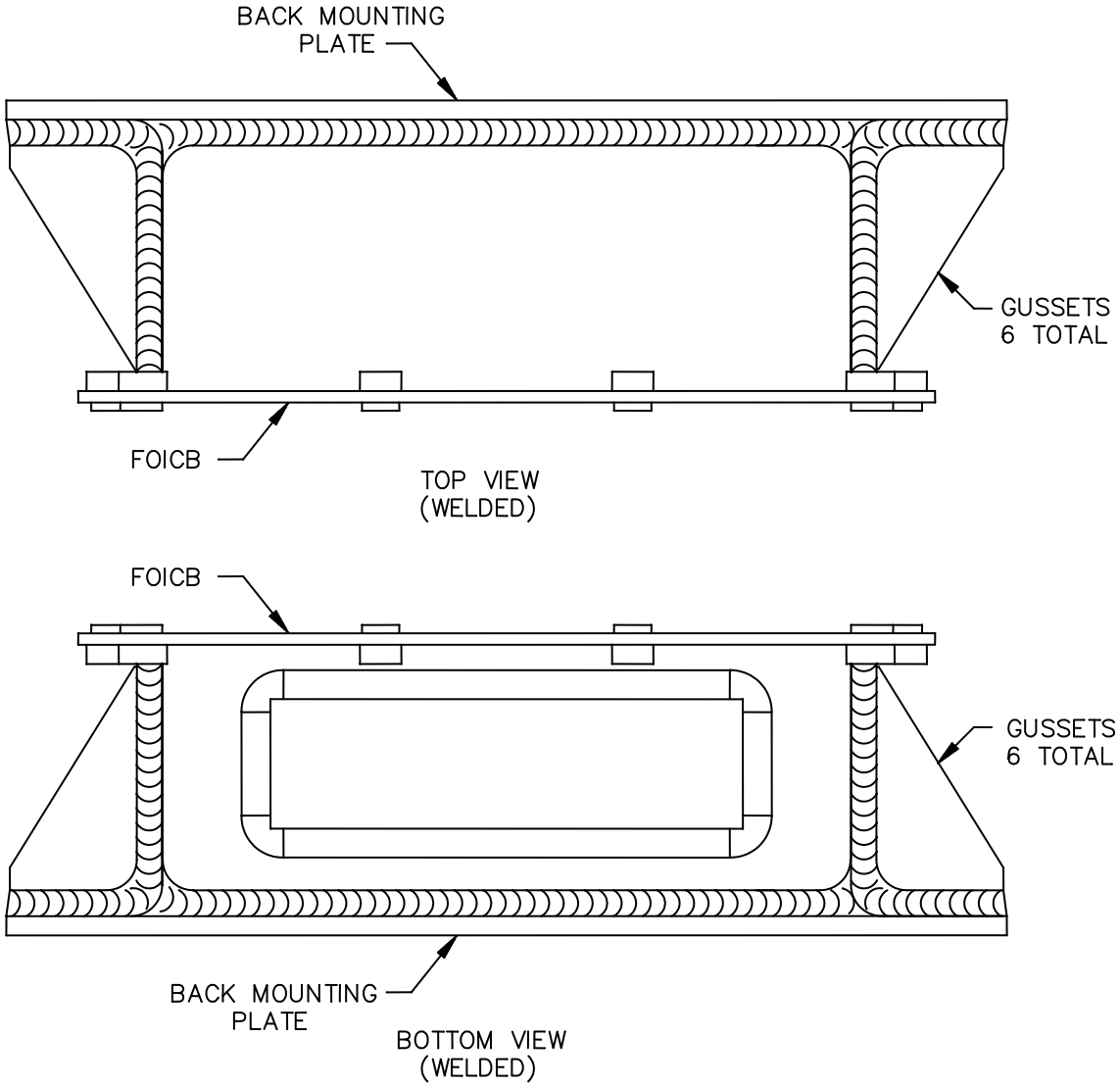


FIGURE 3202-6: Supplemental fixture for connectors, fabrication drawing - Continued.



Source: https://assist.dla.mil -- Downloaded: 2016-12-31T21:01Z
Check the source to verify that this is the current version before use.

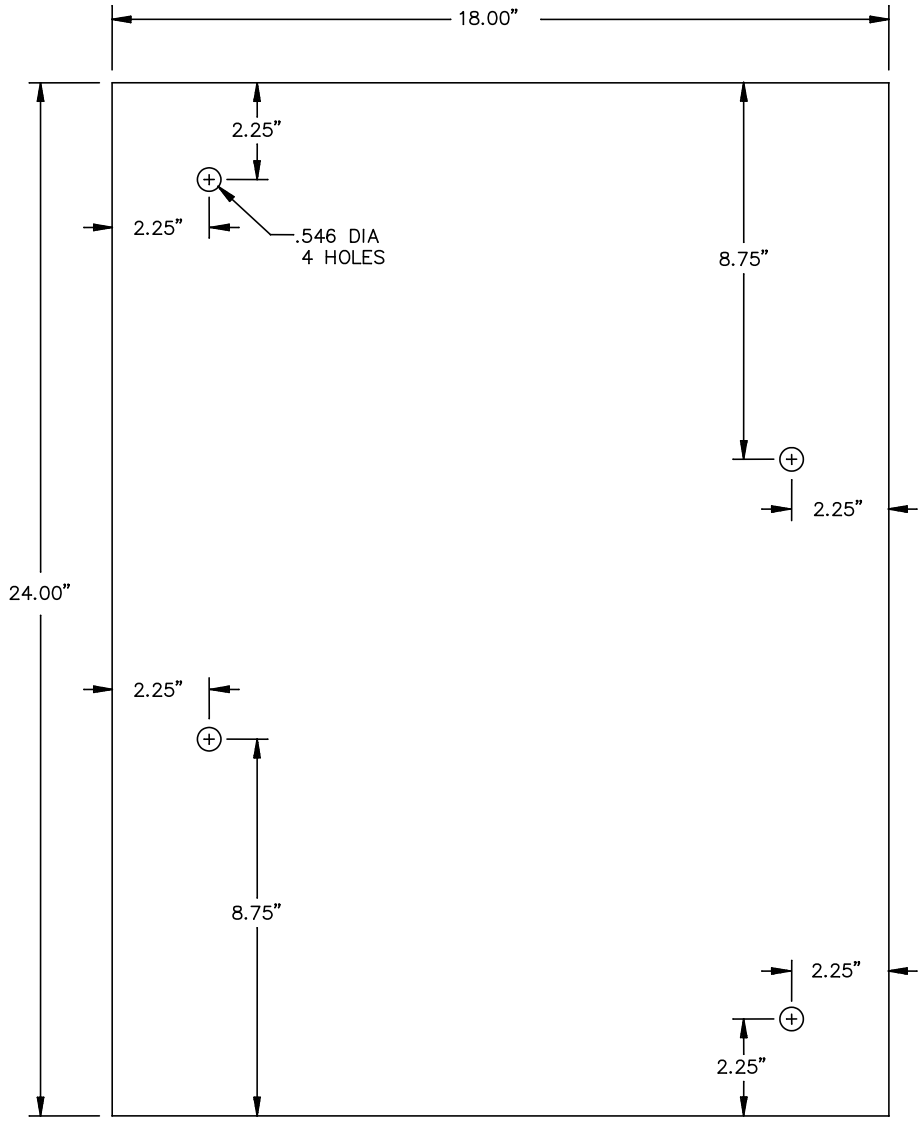


NOTES:

1. Intermediate plate material: .250 inch (6.35 mm) 5083 AL.
2. Dimensions are in inches.
3. Metric equivalents are given for general information only.

| Inches | mm |
|---|---|
| .546 | 13.87 |
| 2.25 | 57.15 |
| 8.75 | 171.45 |
| 18.00 | 457.20 |
| 24.00 | 609.60 |

FIGURE 3202-6: Supplemental fixture for connectors, fabrication drawing - Continued.



Source: https://assist.dla.mil -- Downloaded: 2016-12-31T21:01Z
Check the source to verify that this is the current version before use.

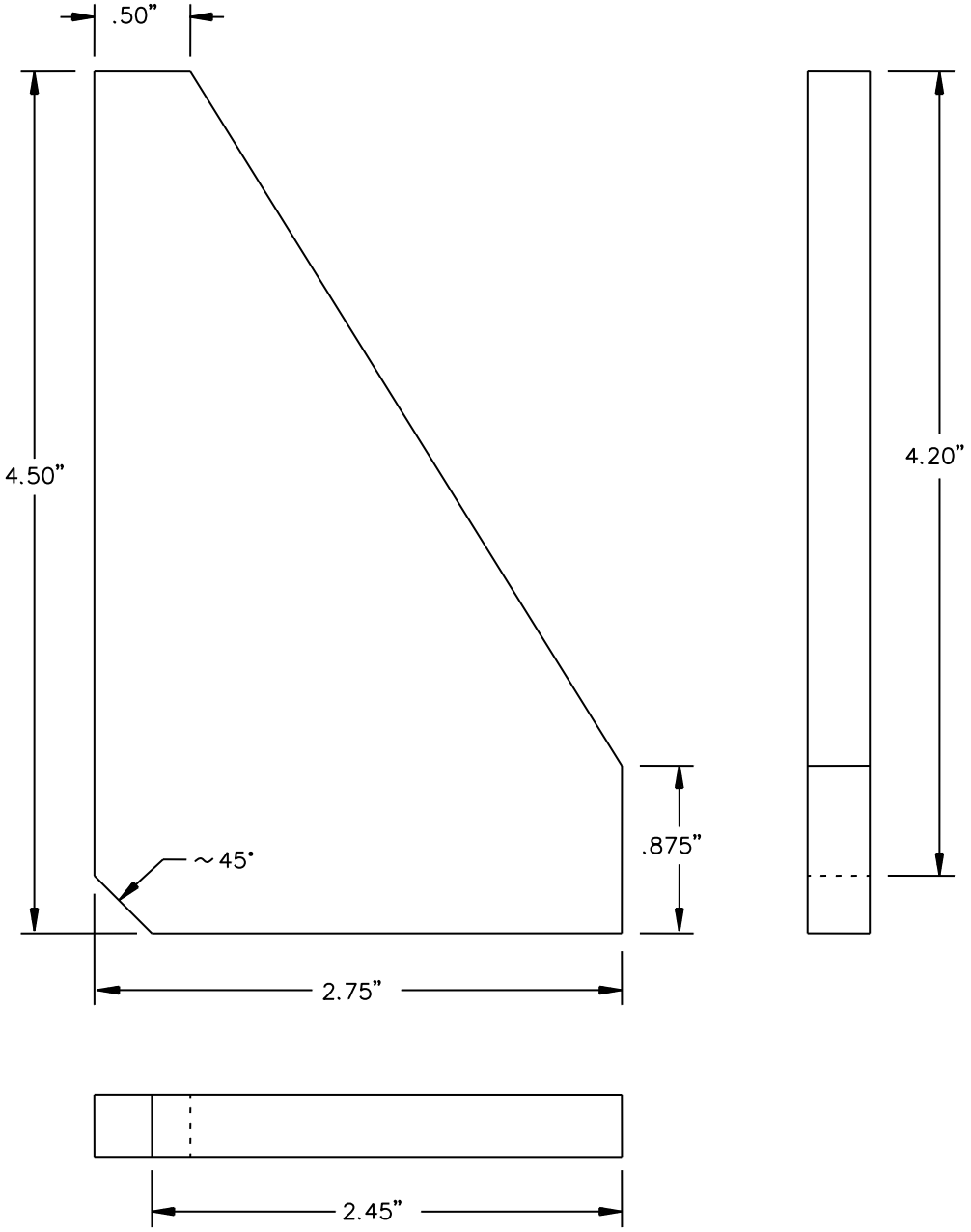


| Inches | mm |
|---|---|
| .50 | 12.70 |
| .875 | 22.225 |
| 2.45 | 62.23 |
| 2.75 | 69.85 |
| 4.20 | 106.69 |
| 4.50 | 114.30 |

NOTES:

1. Gusset plate material: .250 inch (6.35 mm) 5083 AL.
2. Dimensions are in inches.
3. Metric equivalents are given for general information only.

FIGURE 3202-6: Supplemental fixture for connectors, fabrication drawing - Continued.
MEASUREMENT 3202.1



Source: https://assist.dla.mil -- Downloaded: 2016-12-31T21:01Z
Check the source to verify that this is the current version before use.

b. Multiple termini connector supplemental fixture. Multiple termini connectors shall be tested using a modified MIL-PRF-24728/2 interconnection as shown in figure 3202-7 as the supplemental fixture. The receptacle shall be mounted to the side of the supplemental fixture via the receptacle mounting plate utilizing appropriate adaptor plates as shown in figure 3202-8. The receptacle mounting plate shall contain the corresponding through hole and mounting screw holes for the receptacle. The sides of the supplemental fixture shall contain the corresponding through hole and mounting screw holes to interface with the mounting plate (see figure 3202-9). Two receptacles shall be tested at the same time. The receptacles shall be mounted to the interior, sidewalls of the supplemental test fixture. One receptacle shall be mounted near the upper right corner and the other near the lower left corner. The cable, from each receptacle, shall be routed within the interior, using tie wraps and tie wrap holders, such that the cable from each receptacle is routed at least three-quarters around the interior of the supplemental test fixture.

c. Cable supplemental fixture. The configuration for this fixture shall consist of clamps and a section of a raceway mounted to a fixture 4A plate. Smaller diameter cables (such as 4 and 8 fiber cables) shall be mounted in a rotated 90 degree "S" pattern, as shown in figure 3202-4. Larger diameter cables (such as 31 fiber cables and 7 tube, BOF cables) shall be mounted in an inverted "U" pattern, as shown in figure 3202-5.

4.2.9 Torque for shock machine bolts. Hold down bolts (including screws and other similar fasteners) for affixing the mounting fixture (such as the fixture 4A) to the anvil plate and for affixing the supplemental fixture to the mounting plate shall have the specified torque applied (approx. 60 percent of yield per bolt specifications) for the shock test setup. In general, all type fasteners shall be checked for looseness after each impact and retightened to specified torque values.



Source: https://assist.dla.mil -- Downloaded: 2016-12-31T21:01Z
Check the source to verify that this is the current version before use.

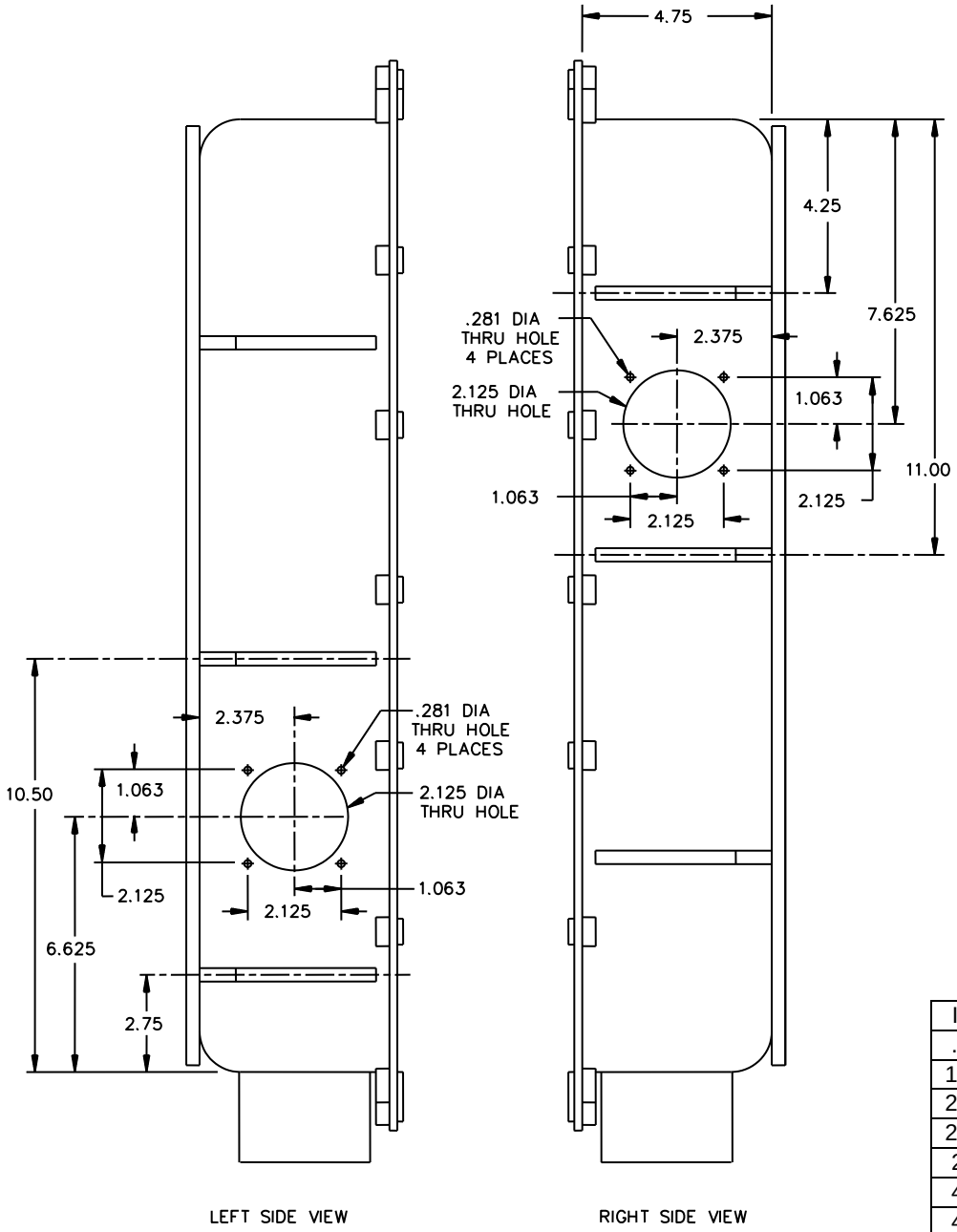


| Inch | mm |
|---|---|
| .281 | 7.137 |
| 1.063 | 27.000 |
| 2.125 | 53.975 |
| 2.375 | 60.325 |
| 2.75 | 69.85 |
| 4.25 | 107.95 |
| 4.75 | 120.65 |
| 6.625 | 168.275 |
| 7.625 | 193.675 |
| 10.50 | 266.70 |
| 11.00 | 279.40 |

NOTES:
1. Dimensions are in inches.
2. Metric equivalents are given for general information only.

FIGURE 3202-7: Mounting plate interface hole locations and dimensions on multiple termini connectors supplemental test fixture.

MEASUREMENT 3202.1



Source: https://assist.dla.mil -- Downloaded: 2016-12-31T21:01Z
Check the source to verify that this is the current version before use.

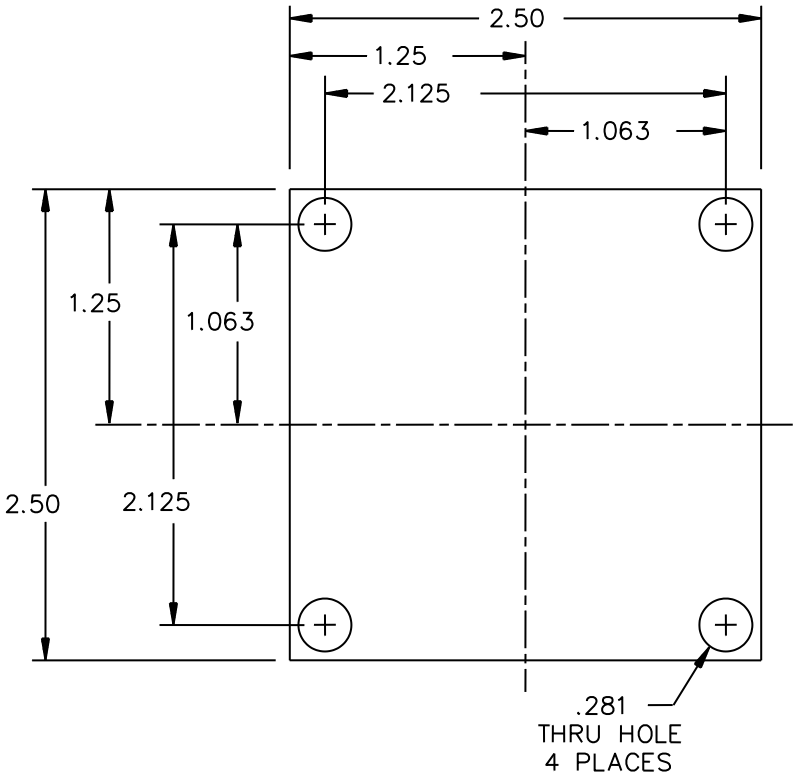


| Inch | mm |
|---|---|
| 0.281 | 7.137 |
| 1.063 | 27.000 |
| 1.25 | 31.75 |
| 2.125 | 53.975 |
| 2.50 | 63.50 |

NOTES:

1. Master adapter plate.
2. Material: .125 inch (3.18 mm) steel.
3. Adapter plates are used for affixing various multiple termini connectors to supplemental test fixture.
4. Dimensions are in inches.
5. Metric equivalents (mm) are in parenthesis.
6. Metric equivalents are given for general information only.

FIGURE 3202-8. Mounting plate configurations for multiple termini connectors supplemental test fixture.



Source: https://assist.dla.mil -- Downloaded: 2016-12-31T21:01Z
Check the source to verify that this is the current version before use.

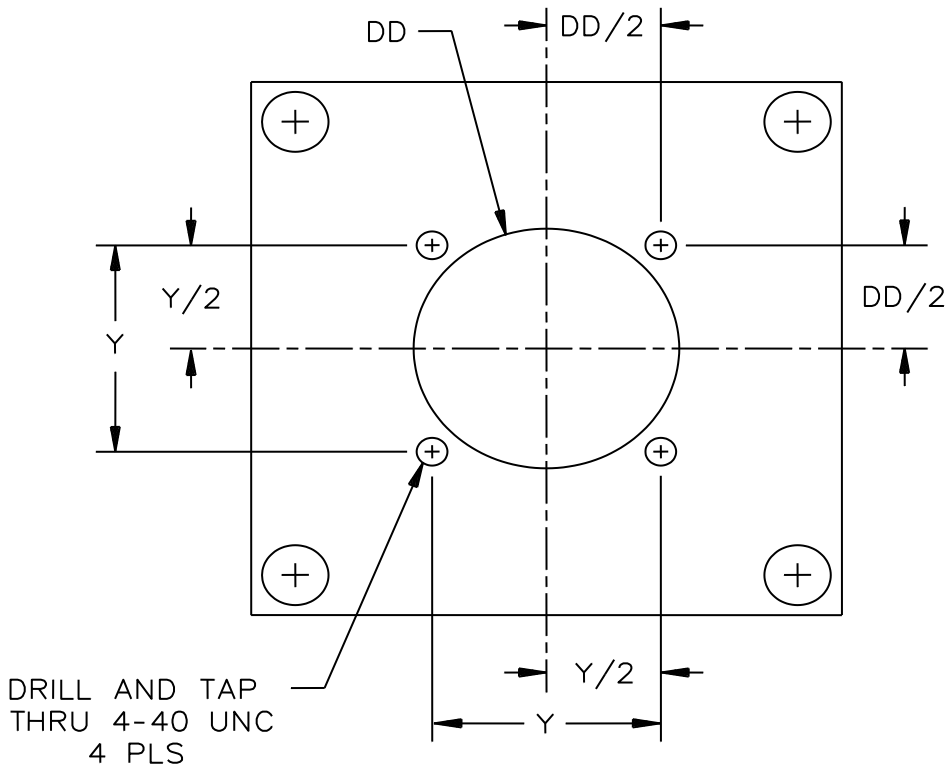


MIL-PRF-28876 and MIL-PRF-64266
adapter plate dimensions

| Shell size | Y inch (mm) | DD inch ± .010 (mm ± .254) |
|---|---|---|
| 11 | 0.750 (19.05) | 0.812 (20.62) |
| 13 | 0.843 (21.41) | 0.937 (23.80) |
| 15 | 0.968 (24.59) | 1.124 (28.55) |
| 23 | 1.281 (32.54) | 1.562 (39.68) |

NOTES:
1. MIL-PRF-28876 and MIL-PRF-64266 adapter plate.
2. Use master adapter plate for common dimensions & material.
3. Dimensions are in inches.
4. Metric equivalents (mm) are in parenthesis.
5. Metric equivalents are given for general information only.

FIGURE 3202-8: Mounting plate configurations for multiple termini connectors supplemental test fixture - Continued.

MEASUREMENT 3202.1



Source: https://assist.dla.mil -- Downloaded: 2016-12-31T21:01Z
Check the source to verify that this is the current version before use.

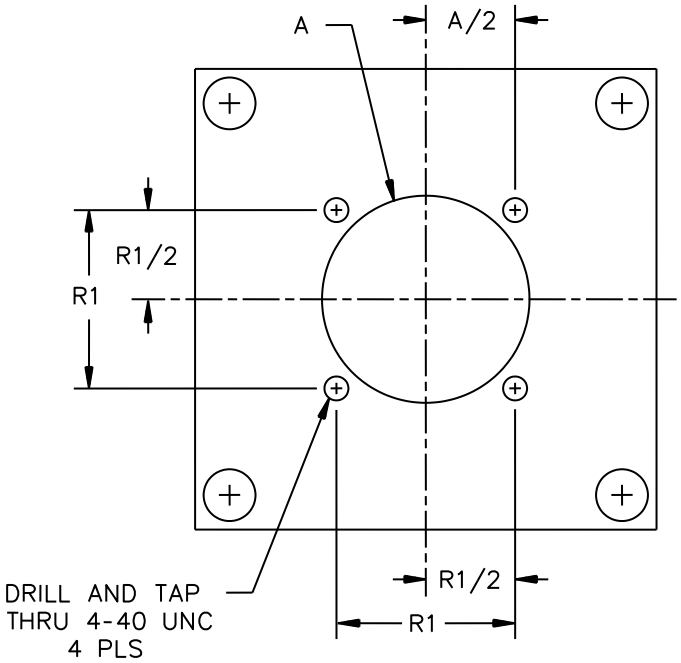


MIL-DTL-38999 adapter plate dimensions,

| Shell size | A | R1 |
|---|---|---|
| 09 | .656 (16.66) | .719 (18.26) |
| 11 | .796 (20.22) | .812 (20.62) |
| 13 | .922 (23.42) | .906 (23.01) |
| 15 | 1.047 (26.59) | .969 (24.61) |
| 17 | 1.219 (30.96) | 1.062 (26.97) |
| 19 | 1.297 (32.94) | 1.156 (29.36) |
| 21 | 1.422 (36.12) | 1.250 (31.75) |
| 23 | 1.547 (39.29) | 1.375 (34.93) |
| 25 | 1.672 (42.47) | 1.500 (38.10) |

NOTES:
1. MIL-DTL-38999 connector adapter plate.
2. Use master adapter plate for common dimensions & material.
3. Dimensions are in inches.
4. Metric equivalents (mm) are in parenthesis.
5. Metric equivalents are given for general information only.

FIGURE 3202-8: Mounting plate configurations for multiple termini connectors supplemental test fixture - Continued.

MEASUREMENT 3202.1



Source: https://assist.dla.mil -- Downloaded: 2016-12-31T21:01Z
Check the source to verify that this is the current version before use.

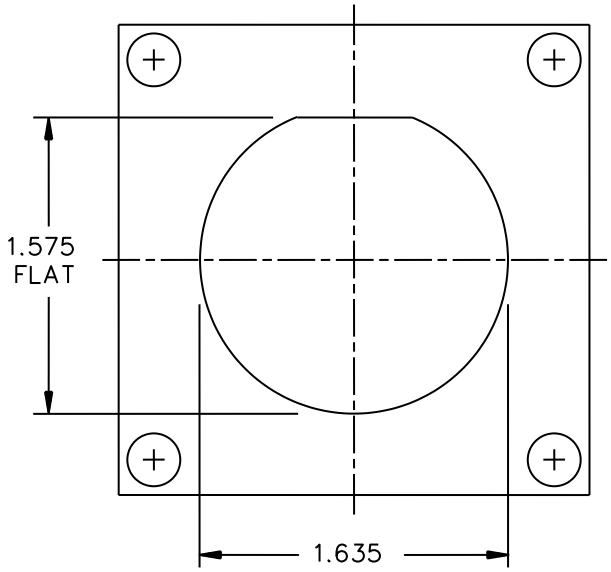


NOTES:
1. Hermaphroditic connector adapter plate.
2. Use master adapter plate for common dimensions and material.
3. Dimensions are in inches.
4. Metric equivalents (mm) are in parenthesis.
5. Metric equivalents are given for general information only.

FIGURE 3202-8: Mounting plate configurations for multiple termini connectors supplemental test fixture - Continued.



Source: https://assist.dla.mil -- Downloaded: 2016-12-31T21:01Z
Check the source to verify that this is the current version before use.

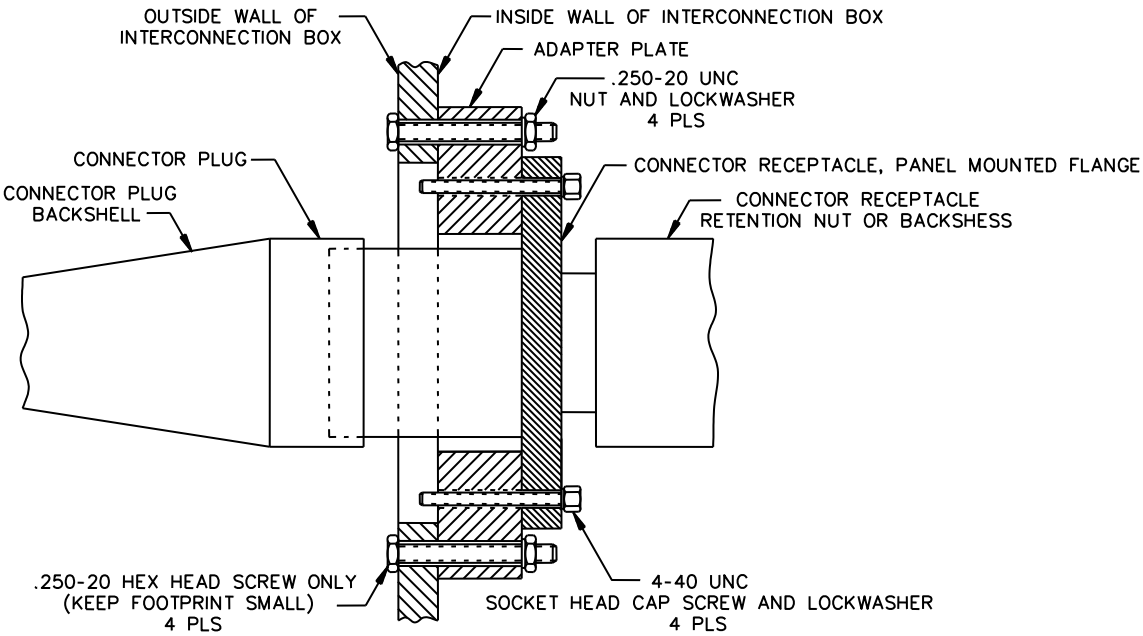


NOTES:

1. This detail shows the configuration to mount the applicable adapter plate to a multiple termini connector, and mounting the connector with adapter plate to the supplemental test fixture (side of the interconnection box).
2. Verify hardware used and direction hardware mounted are in accordance with this detail.
3. For tightening connector plug to connector receptacle with a strap wrench, keep hardware footprint small on the outside of the interconnection box.

FIGURE 3202-9: Assembly of mounting plate and connector with multiple termini connectors supplemental test fixture.

4.2.10 Torque for item (DUT) hold down bolts (foundation bolts for item/DUT). Hold down bolts (including screws and other similar fasteners) for affixing the item (DUT) to the supplemental fixture shall have the specified (per ship installation) torque applied for the shock test setup. These bolts can be retightened to the specified pre-test torque after the first impact. This retightening is acceptable with no verification (measurement) of bolt yielding or stretching. If retightening is considered to be necessary, the lengths of the bolts are to be measured before item (DUT) installation onto the supplemental fixture (if used) or directly onto the mounting plate, as applicable. After subsequent impacts, it must be verified that the bolts have not lengthened, i.e., any bolt loosening is instead caused by additional seating-in of mating surfaces. This seating-in is defined as a bearing surface minor crushing (such as small deformations of high spots on surface) or a bearing surface being slotted, allowing the bolts to loosen without yielding. If measurements indicate the length of the bolt has increased, retightening is not permitted. The test shall continue with the bolts in the as-found condition. Excessive yielding/stretching (bolt lengthening) or loosening shall be considered a violation of the shock test acceptance criteria. Any or all measurement techniques and results should be incorporated into the final shock test report justifying any retightening of bolts completed after the second impact.

4.2.11 Non-exposed bolts internal to the item (DUT). Bolts (including screws and other fasteners) are not to have the specified torque applied during shock test setup. Bolts are not to be checked for looseness or retightened to a specified torque value during shock test setup, after the first impact or after each impact. These bolts include the internal, non-exposed, bolts securing resilient mounts from an enclosure to a base plate.

MEASUREMENT 3202.1



Source: https://assist.dla.mil -- Downloaded: 2016-12-31T21:01Z
Check the source to verify that this is the current version before use.

4.2.12 Non-foundation bolts for supplemental test fixtures. Non-foundation bolts on the supplemental test fixture (or any fixture not a part of the application mounting structure) may have the specific torque applied during the shock test setup, retightened to the specified torque value after the first impact, and be checked for looseness after each impact and retightened to the specified torque values. Gross or continued yield of non-foundation bolts for supplemental test fixtures are not acceptable.

4.2.13 Item (DUT) cover/inspection panel bolts. In general, non-foundation bolts may be checked and the specified torque applied only during the test setup and, if required for compensation of reseating, after the first blow. Items/DUT removed during the test for purposes of performing a visual inspection should be restricted to features designed to permit entry such as inspection panels or covers. Panel/cover bolts are expected to remain tight and not retightened to the specified torque after setup. The exception is when the panel/cover is removed as part of an inspection during the test. This exception to allow entry for visual inspection and apply a torque after inspection is made on a case basis.

4.2.14 Instrumentation bolts. Bolts for securing instrumentation to the item (DUT), fixtures or other items (DUT) are to be checked for looseness and retightened to specified torque values during shock test setup, after the first impact and after each impact. This instrumentation includes any accelerometer used and any triaxial mounting block for the accelerometer, if applicable.

4.2.15 Torque the plug coupling ring on multiple termini connectors.

a. General guidance. The performance of the connector assembly is based upon the dimensions that exist with the connector tightened properly and the mating components completely seated. This is especially true in connectors that use spring loaded inserts and elastic environmental seals/gaskets that must be properly preloaded/pre-stressed to function according to design parameters. Either the tightening torque should be specified, a final dimension or check mark established, or the connector tightened until no free play exists between the receptacle and the plug portion. Since the condition of “no free play” is somewhat indefinable and usually no marks are provided, the tightening torque specified for the connector must be used. The marking is also critical in determining if the change in measured performance is caused by the connector becoming loose. Shock is a mechanical test and the sudden impact shall not create any movement of the connector components, which could degrade the optical performance of the assembly (including loosening). Usually, accelerometers or other instrumentation is used to determine the response of items (DUT) under test, however, due to the size and shape of connectors this is difficult to accomplish. Visual observation of alignment marks is an easy and efficient method to determine if the impact is causing an undesirable condition.

b. MIL-PRF-28876 connector loosening allowance. MIL-PRF-28876 connectors should be checked after each impact to measure the effect of the hammer impact for each drop height. It was not intended that the effects be allowed to accumulate over several blows. The increased amount of loosening from the first or second blows in each axis may cause a significant anomaly during the next blow, an anomaly that may not have occurred at all had the connector been tightened prior to each impact. For instance if not tightened prior to each blow, a "loose" connector may actually break, instead of just loosening a fraction of turn, because of the increased impact forces.

Note that in general, consideration should be given to identifying/specifying the amount of looseness that is acceptable. Ideally there should be no loosening whatsoever. Cumulative effects are part of the shock test. For instance aboard a surface ship, an item (DUT) can receive several successive impacts from a single weapon detonation as the resultant shock induced bubble migrates to the ship.

c. Tightening MIL-PRF-28876 connectors. Verify that item (DUT) is sufficiently tight. When mated initially by hand tightening, do not bottom out threads prior to applying torque. Apply torque as specified in table 3202-IV. Redo (tighten) torque after each axis. Mark position after torque applied and check/record position after each impact.



Source: https://assist.dla.mil -- Downloaded: 2016-12-31T21:01Z
Check the source to verify that this is the current version before use.

TABLE 3202-IV. MIL-PRF-28876 coupling nut torque requirements.

| Shell size | 11 | 13 | 15 | 23 |
|---|---|---|---|---|
| Torque (in-lb) | 15 | 15 | 25 | 50 |

d. Tightening MIL-DTL-38999 connectors. Initially mate and apply a torque. For shell size 11 (2 termini connector), apply a torque of 1.4 N-m (12 in-lb). Mark position after torque applied and check/record position after each impact. Mating halves contain a ratchet mechanism. Do not tighten after each impact.

4.2.16 Verify mating parts retained on single ferruled connectors. For MIL-DTL-83522 connectors, COTS ST and SC connectors, verify that the adapters are adequately tightened/fastened to the patch panel. Verify that item (DUT) is sufficiently tight and did not become disconnected/loose after each impact.

4.3 Measurement equipment.

4.3.1 Ensure that optical equipment is isolated from the shock impact. Surface vibration transmitted from the shock impact can affect instrumentation and connections at the optical ports. One method for isolation is to place optical instrumentation on foam pads or other type of resilient surface.

4.3.2 Accelerometer setup.

a. Orient accelerometer so it is mounted along the 3 principal axes of the item (DUT).

b. Stud mounting accelerometer to supplemental fixture is preferred mounting method. Mount accelerometer to fixture using supplied mounting studs or supplied screws (such as Allen head cap screws). When used, tighten Allen head cap screws to torque specified on the accelerometer parameter sheet.

c. Clean microdot connector signal pins using isopropyl alcohol. Connect one end to the appropriate accelerometer for axis under test. Connect the remaining end to the charge amp input.

d. Connect the accelerometer amplifier BNC output to the data acquisition interface box using suitable BNC-BNC cable. Connect to appropriate data acquisition channel.

e. Set the amplifier sensitivity and set amplifier settings to provide a 2,500 g recording capability at 80 percent of the data acquisition card range.

f. Set the lower frequency limit at 2 Hz acc.

g. Set the upper frequency limit at 1 kHz.

h. Move power switch to “On”.

i. Verify that batteries, if used, are charged. Replace or recharge batteries as required.

4.3.3 Data acquisition setup. Ensure acceptable optical signal trace by verifying that no saturation of the optical trace has occurred. Flat horizontal lines in the signal trace close to the baseline (0 dB) or close to optical signal peaks is an indication of amplifier saturation. For example, using a -10 to +10 Volt signal, a data acquisition board would clip (become saturated) at ± 10 Volts. A flat line signal is a voltage level greater than +10 Volts or less than –10 Volts and is beyond the capability of the data acquisition system to measure it.

5. Test procedure.

MEASUREMENT 3202.1



Source: https://assist.dla.mil -- Downloaded: 2016-12-31T21:01Z
Check the source to verify that this is the current version before use.

5.1 Method.

5.1.1 Multiple terminus connector (see 3.14.16 and 4.6.6.15 of MIL-PRF-28876). Mated cable-connector assemblies shall be tested in accordance with MIL-S-901, grade A. Optical discontinuities shall be measured during the test. For connectors of shell sizes 15 and 23, a minimum of four termini shall be monitored for discontinuity. The change in optical transmittance shall be measured after the test. The connector shall be visually examined after the test.

5.1.2 Cable, (see 3.7.13 and 4.7.6.13 of MIL-PRF-85045). A 30-meter minimum length of cable shall be used for this test. The specimen shall be subjected to grade A, type A, class I shocks as specified by MIL-S-901. Not less than 1 meter of the test specimen shall be mounted to simulate shipboard installation in a cable tray (refer to MIL-STD-2003, section 4 for guidance). After completion of the test, the cable shall be visually examined. Signal discontinuity shall be monitored during the test, in accordance with TIA/EIA-455-32, with equipment having a time resolution sufficient to resolve discontinuities of duration not less than 50 microseconds.

5.1.3 Single terminus connector (see 3.5.3.5 and 4.8.6 of MIL-DTL-83522). Test in accordance with EIA-455-14 except method shall conform to MIL-S-901 with setup and procedure as stated herein. When specified, test shall be in accordance with MIL-S-901, grade A, type A, class 1. Signal discontinuity shall be monitored during the test.

5.2 Test precautions. Verify that the following safety measures are included (also see 5.3.2 and 6.2).

5.2.1 Posted sign. Verify that a sign is posted that states: “SHOCK TEST IN PROGRESS”. When located in an enclosed facility, sign is to be posted outside the facility entrance. When located in an open area, signs are to be posted along access paths to the area.

5.2.2 Hearing protection. Verify that personnel are wearing ear protection. When located in an enclosed facility, verify all personnel in the facility are wearing ear protection. When located in an open area, verify all personnel participating in the test, remaining in the area or working in the area are wearing ear protection.

5.2.3 Missile hazard. Verify that personnel exposure to a missile hazard during the test is minimized. When located in an enclosed facility, verify all personnel in the facility are located outside the plane of the hammer impact. When located in an open area, verify:

a. Personnel participating in the test are located outside the plane of the hammer impact,

b. Area in which a potential missile hazard may occur is roped off/adequately segregated to personnel working in/transient through.

5.2.4 Impending hammer impact. Verify that all personnel in the facility are aware of each impending hammer impact/drop prior to the actual impact. When located in an enclosed facility, verify all personnel in the facility acknowledge awareness. A recognized phrase is one method that may be used to alert personnel prior to each impending hammer impact. When located in an open area, a loud-speaker announcement or dedicated audible signal may be more appropriate. If the latter is used, verify that facility personnel recognize purpose of the dedicated signal being used.

5.3 Test synopsis of hammer impacts/drops.

5.3.1 Summary. Three impacts (blows) at hammer heights of 1, 3 and 5 feet shall be applied parallel to each of three mutually perpendicular axes of the item (DUT) being tested. This is accomplished by attaching the item (DUT) by fixtures to an anvil plate and striking the anvil plate with top, back and side impacts. The sequence of each axis may vary; however, a sequence of 1, 3 and 5 foot impacts are to be done in each of the three mutually perpendicular axes. When testing connectors, one axis shall be parallel to the longitudinal axis of the connector. If additional testing is required, separate item (DUT) sets may be substituted for each additional set of nine impacts.

MEASUREMENT 3202.1



Source: https://assist.dla.mil -- Downloaded: 2016-12-31T21:01Z
Check the source to verify that this is the current version before use.

NOTE: Ensure that the anvil plate is rotated for the side impacts after completing the top and back impacts (or rotated for top and back impacts after completing the side impacts).

NOTE: The sequence of the nine impacts is discretionary.

5.3.2 Items to perform prior to the impact include:

a. Post sign stating "SHOCK TEST IN PROGRESS" where appropriate.

b. Verify all personnel in the facility are wearing their ear protection in a proper manner.

c. Verify that all personnel in the facility are aware of method to be alerted prior to each hammer impact.

d. Inspect setup to ensure that the hammer and the shock plate are free from optical cable or other obstructions prior to performing the test.

e. Release the shock machine hammer from the quick release hook. This may be done directly or by an actuator attached to the data acquisition system. If an external actuator is used, ensure that the mechanism does not cause electromagnetic interference in the optical measurement system.

5.3.3 Items to perform after the impact include:

a. Verify that fixtures and item (DUT), if applicable, are checked for proper torque value or looseness.

b. Verify that no missile hazard occurred, no items have become loose/damaged and sufficient optical transmittance is obtained.

5.4 Calculations.

5.4.1 Change in optical transmittance. Change in optical transmittance after each impact and the logarithmic power ratio of item (DUT) post impact measurement relative to pre-impact measurement. The computation is as follows:

$$\text{Pre- Log (dB)} = 10 \log [(P(To)/P(Ro)]$$

Where: $Pt_o$ = Power Transmission of item (DUT) under test measured before start of test/impact,
$Pt_i$ = Power Transmission of item (DUT) under test measured after impact and,
$Pt_i/Pt_o$ = Relative change in power transmission of the item (DUT) under test after impact.

5.4.2 Optical signal discontinuity.

a. Recorded parameters. Maximum change in optical transmittance during discontinuity interval (dB), time duration of discontinuity (microseconds).

NOTE: Record, at a minimum, the discontinuity with the maximum duration in with the change in optical transmittance exceeds 0.5 dB (if any). Also record the corresponding maximum value of the change in optical transmittance for the discontinuity with the maximum duration.

b. Calculated parameters.

$$\text{Change in optical transmittance after each impact } (\Delta D) = 10 \log (Pti/Pt0)$$

Where: $Pt_0$ = Power transmission of test fiber measured before start of test/impact,
$Pti$ = Power transmission of test fiber measured after impact and
$(Pti/Pt_0)$ = relative change in power transmission of test fiber after impact.

MEASUREMENT 3202.1



Source: https://assist.dla.mil -- Downloaded: 2016-12-31T21:01Z
Check the source to verify that this is the current version before use.

NOTE: Record an increase in optical transmittance (increasing power) as a positive (+) dB.

5.5 Data sheet. In addition to the information listed in Measurement Support Process 2201 of MIL-STD-1678-2, the following items are to be included on the data sheet.

a. Test apparatus to include the MIL-S-901 Lightweight Shock Machine and type of Mounting Fixture (Shock test fixture used such as Fixture 4A).

b. Impact/blow direction and hammer drop height plus any additional descriptive test item data.

c. Test tolerances for the following optical signal discontinuity parameters: Maximum allowed change in optical transmittance (signal level) during shock pulse in dB, maximum allowed time duration of optical signal discontinuity in microseconds, maximum allowed relative change in optical transmittance before/after impact in dB.

d. Other documentation. See appendix F for documentation required when performing MIL-S-901 shock testing for a principal unit or subsidiary component.

6. Notes.

6.1 Intents behind standardization efforts.

6.1.1 Multiple party testing considerations. The incentive to minimize test variables, resulting in a level playing field for multiple parties testing, leads the Government to establish a baseline. This baseline includes considerations for fabrication of test samples, methods to employ launch conditions and use of specific test practices in addition to specifics for test sample configurations.

6.2 Safety considerations.

6.2.1 Regulations. It is recommended that the test laboratory follow safety practices pertaining to this test for personnel and equipment. For each product or stressor, the applicable personnel protective equipment (PPE) should be considered.

a. Hearing conservation. Federal standards include 29 CRF 1910.95. Also, the military must be in compliance with the applicable documentation such as OPNAV 5100.23F, Ch 18. For the product/stressor of “noise”, the PPE of circumaural muffs or circumaural muffs with ear plugs should be considered.

b. Eye protection. Federal standards include 29 CRF 1910.133. Also, the military must be in compliance with the applicable documentation such as OPNAV 5100.23F, Ch 20. For the product/stressor of “impact”, the PPE of impact resistant goggles or safety glasses should be considered.

c. Hand protection. Federal standards include 29 CRF 1910.138. Also, the military must be in compliance with the applicable documentation such as OPNAV 5100.23F, Ch 20. For the product/stressor of “getting your fingers smashed/splintered” while placing/reorienting fixtures, the PPE of heavy duty gloves should be required.

d. Lifting equipment/hoists. Navy standards include NAVFAC P307. Also, each military activity must be in compliance with their internal standard (such as NAVSSES 5100.14F, Ch 25). Hoists and other heavy lifting equipment should require routine maintenance, inspection and safety checks.

6.2.2 Considerations. Consideration should be given to implement test precautions (see 5.2) and safety measures cited in the test synopsis (see 5.3) as part of the specified laboratory safety procedures.



Source: https://assist.dla.mil -- Downloaded: 2016-12-31T21:01Z
Check the source to verify that this is the current version before use.

APPENDIX A

MINIMUM ESSENTIAL CHECKLIST FOR MECHANICAL SHOCK MEASUREMENTS

A.1. Purpose. This appendix addresses a checklist of the minimum essentials for the mechanical shock measurement.

A.2. Usage. Table 3202 A-I is the checklist of minimum essentials for Government auditors, or their representatives, use during inspections. This checklist should be expanded at the auditor's discretion.

TABLE 3202 A-I. Minimum essential checklist for mechanical shock measurements.

| Item | Category | Item | Requirement | Compliance |
|---|---|---|---|---|
| 1 | Test sample configuration | Cable assembly length:<br>Connectors and splices<br>Other fiber optic components:<br>See Part 4 of MIL-STD-1678 | 10 meters minimum (13 m if to do 3 cut-backs)<br>Complies with Part 4 of this standard practice | |
| 2 | Room ambient Environmental Condition | Standard ambient (if test equipment built to operate in this range, if not-then controlled ambient) | 23 ± 5°C/73 ± 9°F & 20 to 70% RH | |
| | | Controlled Ambient | 23 ± 2°C/73 ± 4°F & 45 to 55% RH | |
| 3 | Test condition | Test setup cable routing | Bend diameters ≥ min long term bend diameter | |
| | | | Sharp twists & bends avoided | |
| | | | Avoid protrusions/other obstacles | |
| | | Weight restrictions | Unless otherwise specified, item (DUT): 200 pounds. See 4.2.3 for other restrictions. | |
| | | Type of mounting (hard versus resilient) | If resilient, then deflection less than 1.5 inches (see 4.2.6). | |
| | | Approved LWSM | Listed in enclosure (1) of NAVSEAINST 9491.1D | |
| 4 | Shock pulse measurement | Accelerometer parameters | Calibration: ± 5 percent over the frequency range of 5 to 2000 Hz | |
| | | | Selection: fundamental resonant frequency ≤ 10,000 Hz. | |
| | | | Placement: Secured rigidly (stud mounted preferred), on test fixture foundation, near as possible to, but not on item (DUT) | |
| | | | Orientation: along 3 principle axes of item (DUT) | |
| | | | Connect instrument cabling: Clean connections, select suitable cable (e.g., BNC-BNC cable) | |
| | | | Verify proper amplifier sensitivity set for accelerometer used | |
| | | Accelerometer data analysis | Prepared shock response spectrum or performed other suitable analysis (see appendix D). | |



Source: https://assist.dla.mil -- Downloaded: 2016-12-31T21:01Z
Check the source to verify that this is the current version before use.

TABLE 3202 A-I. Minimum essential checklist for mechanical shock measurements - Continued.

| Item | Category | Item | Requirement | Compliance |
|---|---|---|---|---|
| 5 | Test equipment | | | |
| | Level | Checks performed | See appendix C<br>Checks before each blow/impact (see C.3).<br>Checks for/during the test (see C.4).<br>Periodic checks (see C.5). | |
| | | Qualification or first article test | Perform as specified in measurement 3202. | |
| | | Principal unit (Type A) or subsidiary component (Type B) | Perform as specified in measurement 3202 with additional constraints listed in appendix F. | |
| 6 | Optical measurements | Change in optical transmittance | Compliance with measurement 2101 | |
| | | Optical signal discontinuity | Compliance with measurement 2104 | |
| 7 | Examinations | Visual inspection | No leakage, loss of sealing capacity, damage detrimental to operation. | |
| | | Ferrule end face contamination | FOVIS inspected & cleaned. Table provided summarizing cleaning steps, cleaning device, cycle used, and result. | |
| | | Optical fiber connections | Routed away from moving parts on the LWSM | |
| 9 | Test setup | Test fixture | | |
| | | Mounting fixture | Use of approved LWSM standard mounting fixture (see 4.2.4 and table 2302-II).Correct supplemental fixture used (see 4.2.8). | |
| | | Cabling supports | First at ≥ 8 inch from item (DUT) assembly, isolated from supplemental fixture. | |
| | | | Cable taunt with up to 1.5 inch deflection, at bends do not exceeded minimum bend diameter | |
| | | | Secure/tie down cables (tie wraps allowed/make snug) | |
| | | Data acquisition setup | Verify no amplifier saturation occurs (see 4.3.3) | |
| | | Torque | Applies to non-aircraft, multiple termini connectors (see 4.2.15) | |
| | | Spacers for mounting fixture | Compliance with table 3202-III | |



Source: https://assist.dla.mil -- Downloaded: 2016-12-31T21:01Z
Check the source to verify that this is the current version before use.

TABLE 3202 A-I. Minimum essential checklist for mechanical shock measurements - Continued.

| Item | Category | Item | Requirement | Compliance |
|---|---|---|---|---|
| 10 | Test | Maintain setup during test (source end) | No disconnection allowed until after testing completed (see measurements 2102, 2104) | |
| | | Number of channels monitored | Optical signal discontinuity: ≥4<br>Change in optical transmittance: all (before and after each test condition) | |
| | | Test precautions | Notification of blow, posted signs, hearing, personnel position (see 5.2, 5.3.2, and 6.2) | |
| | | Test performance | Sequence of 1, 3, 5 foot impacts in each of 3 mutually perpendicular axes (see 5.3.1). | |
| | | Test processes | Compliance with Measurement 3201 | |
| 11 | Calculation | Operator performed calculations | Verify correct method used and calculated properly (see 5.4) | |
| | | Approved data sheet | Compliance with Measurement Support Process 2201. | |
| 12 | Data sheet | Added data sheet requirement | Test apparatus includes:<br>LWSM (Lightweight Shock Machine)<br>Mounting fixture<br>Supplemental fixture | |
| | | | Test parameters and limits<br>Axis (Impact)/blow direction<br>Hammer drop height<br>Any descriptive test data or additional documentation for a Principal Unit or a subsidiary component (see 5.5.4). | |
| | | | Test tolerances for the following optical signal discontinuity parameters:<br>Maximum allowed change in optical transmittance (signal level) during shock pulse in dB<br>Maximum allowed time duration of optical signal discontinuity in microseconds,<br>Maximum allowed relative change in optical transmittance before/after impact in dB | |
| | | | If connector, was item (DUT) mated or unmated | |



Source: https://assist.dla.mil -- Downloaded: 2016-12-31T21:01Z
Check the source to verify that this is the current version before use.

TABLE 3202A - I. Minimum essential checklist for mechanical shock measurements - Continued.

| Item | Category | Item | Requirement | Compliance |
|---|---|---|---|---|
| 12 | Data sheet | Posttest visual examination for physical deterioration | Broken or excessively worn engaging hardware.<br>Uneven wear or galling of hardware, guide pins, or mating surfaces.<br>Excessive debris from worn surfaces.<br>Damage or wear to seals, if applicable.<br>Displaced, bent, broken, or chipped parts.<br>Scratching of the interface area.<br>No missile hazard. | |
| | | Posttest visual examination for mechanical deterioration | Connectors: Ability of the launch or detector connectors to properly mate and un-mate during or after the completion of the test.<br>Other: Ability to operate mechanical items, install and remove panels. | |
| 13 | Pass/fail criteria | Proper criteria implemented | Test operators knows if fail and to verify result | |

A.3. Notes.

A.3.1 Intended use.

A.3.1.1 Audit team. This checklist is intended to assist Government auditors or their representatives during inspections of the optical measurement system. This checklist may be augmented at the auditor's discretion; however, it is not to be reduced.

A.3.1.2 Test laboratories. When test laboratories prepare to perform mechanical shock measurements or audits, this checklist should be used to supplement Measurement 3202, not replace it.



Source: https://assist.dla.mil -- Downloaded: 2016-12-31T21:01Z
Check the source to verify that this is the current version before use.

APPENDIX B

MAXIMUM ALLOWED VALUES AND OTHER ACCEPTANCE CRITERIA FOR SHOCK TEST

B.1 Purpose. This appendix provides the unacceptable degree of mechanical and physical deterioration, maximum allowed values for optical measurements obtained during and/or after mechanical shock testing that are specified in various military fiber optic component specifications and, if specified, acceptance criteria for accelerometer used.

B.2 Applicable documents.

B.2.1 General. The documents listed in this section are specified in sections 3, 4, or 5 of this standard practice. This section does not include documents cited in other sections of this standard practice or recommended for additional information or as examples. While every effort has been made to ensure the completeness of this list, document users are cautioned that they must meet all specified requirements of documents cited in sections 3, 4, or 5 of this standard practice, whether or not they are listed.

B.2.2 Government documents

B.2.2.1 Specifications, standards, and handbooks. The following specifications, standards, and handbooks form a part of this document to the extent specified herein. Unless otherwise specified, the issues of these documents are those cited in the solicitation or contract.

DEPARTMENT OF DEFENSE SPECIFICATIONS

| | | |
|---|---|---|
| MIL-PRF-24623 | - | Splice, Fiber Optic Cable, General Specification for (Metric). |
| MIL-PRF-29504 | - | Termini, Fiber Optic Connector, Removable, General Specification for. |
| MIL-PRF-28876 | - | Connectors, Fiber Optic, Circular, Plug and Receptacle Style, Multiple Removable Termini, General Specification for. |
| MIL-PRF-64266 | - | Connectors, Fiber Optic, Circular, Plug and Receptacle Style, Multiple Removable Genderless Termini, Environment Resisting General Specification for. |
| MIL-DTL-83522 | - | Connectors, Fiber Optic, Single Terminus, General Specification for. |

(Copies of these documents are available online at http://quicksearch.dla.mil or from the Standardization Document Order Desk, 700 Robbins Avenue, Building 4D, Philadelphia, PA 19111-5094.)

B.2.3 Order of precedence. Unless otherwise noted herein or in the contract, in the event of a conflict between the text of this document and the references cited herein, the text of this document takes precedence. Nothing in this document, however, supersedes applicable laws and regulations unless a specific exemption has been obtained.

B.3 Pass/fail criteria (generic). Functional tests, inspections and acceptance criteria to show compliance will be developed in accordance with MIL-S-901. Special requirements for fiber optic components listed below will be used.

B.3.1 Mechanical deterioration. Inability of the launch or detector connectors to properly mate and un-mate during or after the completion of the test will be cause for failure of the item (DUT).



Source: https://assist.dla.mil -- Downloaded: 2016-12-31T21:01Z
Check the source to verify that this is the current version before use.

B.3.2 Physical deterioration. Evidence of any of the following defects after the test will be cause for failure of the item (DUT):

a. Broken or excessively worn engaging hardware.

b. Uneven wear or galling of hardware, guide pins, or mating surfaces.

c. Excessive debris from worn surfaces.

d. Damage or wear to seals, if applicable

e. Displaced, bent, broken, or chipped parts.

f. Scratching of the interface area.

g. No missile hazard.

NOTE: Minor physical damage to the tested item (DUT), such as small cracks, minor yielding of structure, out-of tolerance clearances, and similar damage may not be cause for shock test disapproval if such damage is accepted by DLA Land and Maritime – VQP vqp.chief@dla.mil and unless such damage causes unacceptable impairment of equipment performance, results in a hazard, or results in substantially shortened equipment useful life.

NOTE: For principal units that include the above listed components as part of a system, the following requirements may be applicable for inclusion in the pass/fail criteria: spurious signals to other grade A equipment, equipment adrift, electrical shorts, electrical shock hazards to personnel, release of flames, smoke, sparks, etc. When applicable, the pass/fail criteria are to be defined explicitly listing the limits and parameters. Refer to 3.1.10 of MIL-S-901 for requirements to specify and define shock test acceptance criteria.

B.3.3 Optical performance.

a. Change in optical transmittance.

(1) Requirement. The maximum allowable change in optical transmittance during or after the test will is ± 0.5 dB. Power losses exceeding this level will be cause for failure of the item DUT).

NOTE: Some single mode components have a smaller maximum allowable change of ± 0.3 dB.

(2) Method. Change in optical transmittance will be performed as specified in the fiber optic component military specification adhering strictly to the setup and test procedure specified in Measurement 2102 of MIL-STD-1678-2.

b. Optical signal discontinuity.

(1) Requirement. Maximum allowed reduction in the optical signal will not exceed 0.5 dB for duration of 50 microseconds or more. A reduction in the optical signal level of 0.5 dB for duration over 50 microseconds will be cause for failure unless an exception to the requirement is granted for the item (DUT) under test.

NOTE: The following relaxations for various components are specified:

MEASUREMENT 3202.1



Source: https://assist.dla.mil -- Downloaded: 2016-12-31T21:01Z
Check the source to verify that this is the current version before use.

(a) Single mode ST connectors. The maximum allowed reduction in the optical signal will not exceed 0.5 dB for duration of 1 second or more.

(b) Multimode ST connectors. For the side axis, the maximum allowed reduction in the optical signal will not exceed 0.5 dB for duration of 500 microseconds or more.

(c) Cables and fusion splice. The maximum allowed reduction in the optical signal shall not exceed 0.3 dB for a duration of 50 microseconds or more.

(2) Method. Optical signal discontinuity will be performed as specified in the fiber optic component military specification adhering strictly to the setup and test procedure specified in Measurement 2104 of MIL-STD-1678-2.

B.3.4 Accelerometer trace. When specified, an accelerometer trace shall be provided for each impact. The accelerometer shall be calibrated to at least ± 5 percent over the frequency range of 5 to 2000 Hz. The amplitude of the accelerometer shall be calibrated to at least ± 5 percent over the frequency range of 5 to 2000 Hz. The accelerometer selected for a shock sensor should have a fundamental resonant frequency that is not less than 10,000 Hz. The accelerometer shall be rigidly secured and located on the test fixture foundation as near as possible to the item (DUT), but not on the item (DUT) itself.

B.4 Intended use. This appendix provides pass/fail criteria to assist Government auditors, or their representatives, during documentation reviews (such as test procedures and test reports) and inspections. Revisions to the military specifications supersede any values found in this appendix.



Source: https://assist.dla.mil -- Downloaded: 2016-12-31T21:01Z
Check the source to verify that this is the current version before use.

APPENDIX C

CHECKS ON THE MIL-S-901 LIGHTWEIGHT SHOCK MACHINE.

C.1 Purpose. This appendix provides checks that should be included on the lightweight shock machine (LWSM). These checks are ones to perform as one measure to ensure consistent performance. These checks are not meant to be a comprehensive listing.

C.2 Applicable documents.

C.2.1 General. The documents listed in this section are specified in sections 3, 4, or 5 of this standard practice. This section does not include documents cited in other sections of this standard practice or recommended for additional information or as examples. While every effort has been made to ensure the completeness of this list, document users are cautioned that they must meet all specified requirements of documents cited in sections 3, 4, or 5 of this standard practice, whether or not they are listed.

C.2.2 Government documents

C.2.2.1 Specifications, standards, and handbooks. The following specifications, standards, and handbooks form a part of this document to the extent specified herein. Unless otherwise specified, the issues of these documents are those cited in the solicitation or contract.

DEPARTMENT OF DEFENSE SPECIFICATION

MIL-S-901 - SHOCK TESTS. H.I. (HIGH-IMPACT) SHIPBOARD MACHINERY, EQUIPMENT, AND SYSTEMS, REQUIREMENTS FOR

(Copies of this document are available online at http://quicksearch.dla.mil or from the Standardization Document Order Desk, 700 Robbins Avenue, Building 4D, Philadelphia, PA 19111-5094.)

C.2.3 Order of precedence. Unless otherwise noted herein or in the contract, in the event of a conflict between the text of this document and the references cited herein, the text of this document takes precedence. Nothing in this document, however, supersedes applicable laws and regulations unless a specific exemption has been obtained.

C.3 Checks before each blow/impact.

C.3.1 Check fasteners for tightness. This check includes the bolts holding the item (DUT) to the mounting fixture, the mounting fixture to the anvil plate and the anvil plate to the shock machine.

NOTE: If a supplemental fixture is used, this check includes the bolts holding the item (DUT) to the supplemental fixture and the supplemental fixture to the mounting fixture.

C.3.2 Check hammer. Check that hammer not in use is secured so that it is not in contact with its anvil pad and will not make contact during course of a test blow.



Source: https://assist.dla.mil -- Downloaded: 2016-12-31T21:01Z
Check the source to verify that this is the current version before use.

C.4 Checks for/during each test.

C.4.1 Clearance check. Check the clearance between the stops for the forward springs on the back and side (edge) blows. This clearance is to be 1.5 inches (3.8 cm).

NOTE: Clearance of the forward springs for top blows is not controllable. With the static load of the anvil plate and fixture, but without the test item (DUT) and any supplemental fixture, this clearance should be about 1.5 inches.

C.4.2 Check of various rollers. Check the various rollers that guide the anvil plate for the side (edge) blows to ensure that they turn freely. This check may be performed when the anvil plate is being reoriented for the side blows or reoriented for the back and top blows.

C.5 Periodic checks.

C.5.1 Check for cracks in the welds on the anvil plate. Welds in the vicinity of the anvil pads and bottom guide rollers are particularly susceptible. A visually detected crack must be repaired (such as chipped out and re-welded).

C.5.2 Check for deformation in the anvil pads. Apply a straightedge along the anvil pad. If the gap between the center of the anvil pad and the straight edge is more than 0.5 inch (1 cm), the anvil pad (and most likely part of its support structure) is to be removed and replaced.

C.5.3 Check pivot bearings. Check to verify that the pivot bearings of the swing hammer are greased periodically.

NOTE: Lubrication is not mandatory on the guides for the vertical hammer. There is sufficient clearance between the vertical hammer and the guides (0.06 to 0.12 inch [0.15 to 0.30 cm]) to minimize the effectiveness of any lubrication.

C.5.4 Check forward and rebound springs. Check the forward and rebound springs for possible deformation or breakage.

a. Back and side springs. These springs are visible and easy to inspect.

b. Top springs. These springs are enclosed. One procedure to check these springs is when the anvil plate is oriented for the Back and Top blows. First verify that the total height is about 9 inches (23 cm) when the top springs support only the weight of the bare anvil plate. Next, lower the vertical hammer until it rests on the top anvil pad. The height of the top springs should shorten by no more than 0.5 inches (1.3 cm). If a discrepancy is observed, the top spring assembly should be disassembled and inspected.

C.5.5 Check mounting fixture and any supplemental fixture. Check the mounting fixture and any supplemental fixture to ensure it is not excessively bowed or deformed.



Source: https://assist.dla.mil -- Downloaded: 2016-12-31T21:01Z
Check the source to verify that this is the current version before use.

APPENDIX D

ACCELEROMETER CRITERIA AND ANALYSIS OF ACCELEROMETER DATA.

D.1 Purpose. This appendix provides criteria for using an accelerometer when one is required or desired to measure the shock pulse characteristics from the resulting impact. This appendix also provides a method, the shock response spectrum, to analyze the data obtained from the accelerometer trace in a consistent manner. The accelerometer data from the shock test has been found to be an invaluable aid for both fiber optic component design and for troubleshooting or failure analysis. As a part of fiber optic component QPL testing for mechanical shock, the inclusion of accelerometer measurements of the shock pulse has become routine (as routine as recording of other test profiles such as chamber temperature or humidity or both during an environmental test).

D.2 Applicable documents.

D.2.1 General. The documents listed in this section are specified in sections 3, 4, or 5 of this standard practice. This section does not include documents cited in other sections of this standard practice or recommended for additional information or as examples. While every effort has been made to ensure the completeness of this list, document users are cautioned that they must meet all specified requirements of documents cited in sections 3, 4, or 5 of this standard practice, whether or not they are listed.

D.2.2 Government documents

D.2.2.1 Specifications, standards, and handbooks. The following specifications, standards, and handbooks form a part of this document to the extent specified herein. Unless otherwise specified, the issues of these documents are those cited in the solicitation or contract.

DEPARTMENT OF DEFENSE SPECIFICATIONS

MIL-S-901 - SHOCK TESTS. H.I. (HIGH-IMPACT) SHIPBOARD MACHINERY, EQUIPMENT, AND SYSTEMS, REQUIREMENTS FOR

(Copies of these documents are available online at http://quicksearch.dla.mil or from the Standardization Document Order Desk, 700 Robbins Avenue, Building 4D, Philadelphia, PA 19111-5094.)

D.2.3 Order of precedence. Unless otherwise noted herein or in the contract, in the event of a conflict between the text of this document and the references cited herein, the text of this document takes precedence. Nothing in this document, however, supersedes applicable laws and regulations unless a specific exemption has been obtained.

D.3 Excitation of shock motion. The Navy high-impact shock machine for lightweight equipment (Lightweight Shock Machine or LWSM) generates a complex shock motion (or spectra). The test is defined in terms of the shock machine used and the mounting method rather than in terms of a specific shock excitation motion (or spectrum). Dominant excitation imparted by a lightweight shock machine is about 100 Hz when test is performed using a mounting Fixture 4A. The dominant excitation may vary for other type mounting fixtures. The lightweight shock machine has a 1.5 inch maximum displacement.

D.4 Criteria for accelerometers (acceleration pickup or transducer). Either a piezoresistive or a piezoelectric accelerometer may be used as long as the criteria for sensitivity/frequency response, shock limit and measured frequency range are met and data analysis is not performed to produce a shock response spectrum. When an accelerometer is used for shock qualification and/or shock response spectrum analysis purposes, a piezoresistive accelerometer should be used. These criteria are based on the accelerometer being mounted on a supplemental fixture and not on the anvil plate or mounting fixture.



Source: https://assist.dla.mil -- Downloaded: 2016-12-31T21:01Z
Check the source to verify that this is the current version before use.

D.4.1 Sensitivity/frequency response. The ratio of the electrical output over the mechanical input (sensitivity) shall not exceed + 5 percent over the frequency range from the rated value for sensitivity. This rated (reference) value for sensitivity is specified one frequency. The percent change in sensitivity from the rated value over the frequency range may be referred to as the frequency response or amplitude response.

D.4.2 Shock limits. The maximum limit for the amplitude shall be 2,000 g's or greater along the axis of excitation. The resonance frequency shall be at least 10,000 Hz along the axis of excitation.

D.4.3 Frequency range. The range over which the sensitivity does not vary by more than a specified percent from the rated value for sensitivity. The minimum acceptable frequency range is from 5 to 2,000 Hz.

D.5 Accelerometer mounting. Unless otherwise specified, the accelerometer is to be stud mounted with no insulating material between the accelerometer and the mating surface. The accelerometer shall be mounted to align with the orthogonal reference axes of the anvil plate and mounting fixture. Mount the accelerometer on the mounting fixture or supplemental fixtures, as applicable, in a location representative for the mounting of the item (DUT). In general, verify that mounting efforts for accelerometer eliminate relative motion (between accelerometer and the structure/fixture) in the frequency range of interest and ensure placement is not on an irregular surface.

D.6 Interpreting the shock pulse. A shock may be defined as the time-history of motion (acceleration) in the equipment support. The equipment may be modeled in terms of a single degree of freedom system. A shock response spectrum may be calculated for a generated shock motion. The maximum acceleration of the mass is plotted against the natural frequency of a single degree of freedom model. This plot is calculated for a particular fraction of critical dampening.

D.7 Shock response spectrum. Peak values (maximum response) to a shock or impact experienced by a single degree of freedom system for a series of systems, each with a different spring stiffness. A plot is generated of the peak response (in acceleration, velocity or displacement) versus the frequency at the peak response (its natural frequency) for each different spring stiffness. A shock response spectrum, therefore, describes a shock motion in terms of the results it produces.

D.8 Uses for the shock response spectrum.

NOTE: For most fiber optic component shock tests, the accelerometer is mounted on the mounting fixture or the supplemental fixture, not the item (DUT) itself. This is due to the small size and shape of these components (accelerometer mounted on item (DUT) would affect response to a shock). Under these constraints, the following uses apply.

D.8.1 Item (DUT). Relative to linear single degree of freedom systems, the shock response spectrum is useful for determining the frequencies at which a shock has the most potential for damage and for developing shock design requirements and performance limits.

D.8.2 Test fixtures. The shock response spectrum is useful for determining the dominant response frequencies in a structure in which the item (DUT) is attached.

D.9 Limitations of the shock response spectrum.

a. The appropriate damage potential may not be shown for non-linear failure modes (must be validated).

b. Obtaining a prescribed shock response spectrum envelope for a particular test configuration may be impossible for some items (DUT) due to spectrum dip.



Source: https://assist.dla.mil -- Downloaded: 2016-12-31T21:01Z
Check the source to verify that this is the current version before use.

c. Rotational motion, cross-coupled motion and associated failure modes are not addressed.

d. Shock spectra are time independent; therefore, time dependent failure modes may not be shown (needs validation).

e. The shock spectrum represents the response of a hypothetical, linear, single degree of freedom system that does not feedback to the foundation. If the shock response spectrum is obtained from the foundation that is affected by a structure reaction, the shock spectrum envelope comparisons can be very misleading.

D.10 Mounting relative to the equipment's foundation. A measure of equipment's shock severity requires an evaluation of the shock input to the equipment at its base (such as the equipment's foundation). As such, an accelerometer is located close to the equipment on its local foundation to monitor the shock input. Note that an accelerometer measurement located at a position on the equipment (e.g. at its center-of-gravity or at a corner on top of the equipment) would not represent the shock input at the base of the equipment located at the equipment–foundation interface. This accelerometer measurement is performed when the objective is to relate test sample failure to severity of the shock input environment. Therefore, if the objective is to quantify the shock severity of the test sample's input via a Shock Response Spectrum derived from an accelerometer record, a measurement of the shock input to the test sample, rather than the test sample response, is required. A different instrumentation approach may be required if the objective is to measure the test sample response directly.

D.11 Time history curve, information extracted.

D.11.1 Failure not at peak. Failure does not necessarily map with peak acceleration. A high-frequency acceleration peak that is short in duration may not contribute significantly to the failure. Cumulative accelerations over time up to the failure or that occur throughout the shock pulse contribute to the failure. Shock response spectrum versus frequency is a more appropriate means to pursue for cause of failure. The peak velocity and average acceleration have been shown to correlate to failure in underwater shock testing. The slope of a linear velocity ramp (triangle) is viewed as the average acceleration.

D.11.2 Integration of data. Accelerometer data is integrated to obtain a velocity time history. Small changes or errors in acceleration data can lead to a drift in velocity values due to computation of the integral, and also will cause incorrect values in the shock spectrum. An accelerometer signal with a response down to direct current is needed to integrate acceleration in time to obtain the velocity. Charge amplifiers used with piezoelectric accelerometers couple alternating current through a capacitor. This restricts the lower frequency bound to several Hertz. Also, an offset occurs at higher shock levels with a piezoelectric accelerometer. For these reasons, a piezoresistive accelerometer must be used when shock spectrum analysis is to be performed.



Source: https://assist.dla.mil -- Downloaded: 2016-12-31T21:01Z
Check the source to verify that this is the current version before use.

MEASUREMENT 3202

APPENDIX E

PREFERENCE OF MEASURING OPTICAL SIGNAL DISCONTINUITY OVER BIT ERROR RATE.

E.1 Purpose. This appendix discusses the preference of measuring the optical signal discontinuity over the Bit Error Rate (BER). Most of the discussion is about limitations of the BER test.

E.2 Applicable documents.

E.2.1 General. The documents listed in this section are specified in sections 3, 4, or 5 of this standard practice. This section does not include documents cited in other sections of this standard practice or recommended for additional information or as examples. While every effort has been made to ensure the completeness of this list, document users are cautioned that they must meet all specified requirements of documents cited in sections 3, 4, or 5 of this standard practice, whether or not they are listed.

E.2.2 Government documents.

E.2.2.1 Specifications, standards, and handbooks. The following specifications, standards, and handbooks form a part of this document to the extent specified herein. Unless otherwise specified, the issues of these documents are those cited in the solicitation or contract.

DEPARTMENT OF DEFENSE SPECIFICATIONS

MIL-S-901 - SHOCK TESTS. H.I. (HIGH-IMPACT) SHIPBOARD MACHINERY, EQUIPMENT, AND SYSTEMS, REQUIREMENTS FOR

(Copies of these documents are available online at http://quicksearch.dla.mil or from the Standardization Document Order Desk, 700 Robbins Avenue, Building 4D, Philadelphia, PA 19111-5094.)

E.2.3 Order of precedence. Unless otherwise noted herein or in the contract, in the event of a conflict between the text of this document and the references cited herein, the text of this document takes precedence. Nothing in this document, however, supersedes applicable laws and regulations unless a specific exemption has been obtained.

E.3 Signal characterization. Optical signal discontinuity measurements are done using a continuous wave (CW) signal. The steady state and any drop/gain in the power level are measured for optical signal discontinuity. The magnitude of the modulation of the CW signal (peak-to-valley) can be characterized with respect to an environmental disturbance (such as shock or vibration). BER measurement consists of interpreting the power level output in terms of a zero or one. The exact value of the change of this voltage or power level due to an environmental disturbance is not measured (remains an unknown). As a result, the distribution of the BER signal cannot be characterized with respect to an environmental disturbance (see figure 3202-E1).

E.4 BER measurement constraints.

E.4.1 Power level assumed constant. The BER is measured assuming a constant affect or degradation of the power output level that does not vary in magnitude during the extent of the measurement.

E.4.2 Average degradation measured. The pass/fail criterion is set to measure an average degradation during the test.

E.4.3 Repeatability of BER test results. The loss at which an error will be registered in typical BER setups is typically several dB. This loss is not really adjustable in a practical sense, it is whatever you happen to get based on the source/detector you use and the cable configuration. This contrasts with the specific 0.5 dB threshold established for change in optical transmittance type test (such as optical signal discontinuity). So the results between different BER test setups will not be comparable nor necessarily representative of the installed system performance.

MEASUREMENT 3202.1



Source: https://assist.dla.mil -- Downloaded: 2016-12-31T21:01Z
Check the source to verify that this is the current version before use.

E.5 BER applicability to vibration & shock disturbances.

E.5.1 Vibration.

a. Random. During this test, random levels of amplitudes are introduced at varying frequencies. Each data pulse is measured with a different magnitude of noise or ripple effect. Unless the power output level is set to the worst case output level, the response can be grossly under predicted.

b. Swept sine. When stepping through the frequencies one at a time, unacceptable performance at one frequency may be masked if those results are averaged over multiple frequencies.

E.5.2 Mechanical shock. BER measurements are not applicable for this test since the effects on the output power level are not constant and occur over too short an interval to assess actual performance. The actual response may be grossly under predicted.

E.6 Validity considerations to various BER type measurement approaches. In general, a BER measurement at the component level testing for shock and vibration testing is not recommended. If the BER is still of interest, then the alternatives to a direct measurement of BER listed below may be investigated.

E.6.1 Direct measurement of BER. There is no validity in obtaining an absolute number for the BER. Absolute BER values are a function of the optical power in the system and the measurement equipment. In addition, averaging occurs during the BER measurement and obtaining a specific value for the BER does not ensure adequate performance.

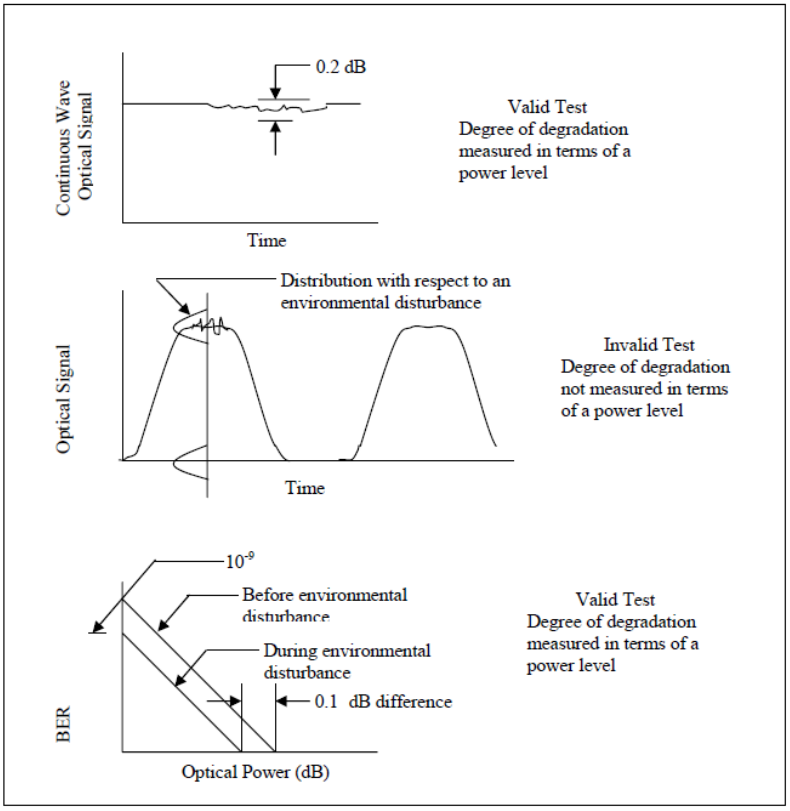


FIGURE 3202-E1. Measuring optical signal discontinuity over BER.



Source: https://assist.dla.mil -- Downloaded: 2016-12-31T21:01Z
Check the source to verify that this is the current version before use.

E.6.2 Approach to BER Measurement in terms of power level. A valid test approach is to measure the degree of degradation in terms of power level and allows for an adequate duration. In this approach, the BER is measured in terms of a power level and not an absolute value. One implementation to this approach is to plot the BER versus the power before and during the test.

E.6.3 Approach to determine change in data packet bits. In order to take out the averaging found in a BER test, an alternate is to run as an error test, where the pass/fail is some specific number of errors. This alternative to performing a BER measurement is a valid approach. A continuous stream of data packet bits is sent during the test. Error checking software determines if there is any change in data packet bits. This check is measured assuming a constant affect or degradation of the power output level that does not vary in magnitude. Passing is considered to be if no data packet bits are changed. The pass/fail criterion is set to measure at an average degradation. To have an accurate representation, the data packet bits must be sent at the worst case power output levels for each system being considered. This approach is qualitative in terms of validating system performance, and generally is not representative of actual system performance.



Source: https://assist.dla.mil -- Downloaded: 2016-12-31T21:01Z
Check the source to verify that this is the current version before use.

MEASUREMENT 3202

APPENDIX F

SHOCK TESTING OF PRINCIPAL UNITS AND SUBSIDIARY COMPONENTS.

F.1 Purpose. Further direction is provided in this appendix with intent to supplement MIL-S-901 for performing Principal Unit (Type A) and Subsidiary Component (Type B) high impact mechanical shock testing on fiber optic components. To ensure that the risk to the Government of accepting bad optical measurement data is low, to minimize test variations and to permit more accurate comparison of test results from multiple sources, a standardized approach is specified to perform this measurement.

F.2 Applicable documents.

F.2.1 General. The documents listed in this section are specified in sections 3, 4, or 5 of this standard practice. This section does not include documents cited in other sections of this standard practice or recommended for additional information or as examples. While every effort has been made to ensure the completeness of this list, document users are cautioned that they must meet all specified requirements of documents cited in sections 3, 4, or 5 of this standard practice, whether or not they are listed.

F.2.2 Government documents

F.2.2.1 Specifications, standards, and handbooks. The following specifications, standards, and handbooks form a part of this document to the extent specified herein. Unless otherwise specified, the issues of these documents are those cited in the solicitation or contract.

DEPARTMENT OF DEFENSE SPECIFICATION

MIL-S-901 - SHOCK TESTS. H.I. (HIGH-IMPACT) SHIPBOARD MACHINERY, EQUIPMENT, AND SYSTEMS, REQUIREMENTS FOR

(Copies of this document are available online at http://quicksearch.dla.mil or from the Standardization Document Order Desk, 700 Robbins Avenue, Building 4D, Philadelphia, PA 19111-5094.)

F.2.3 Order of precedence. Unless otherwise noted herein or in the contract, in the event of a conflict between the text of this document and the references cited herein, the text of this document takes precedence. Nothing in this document, however, supersedes applicable laws and regulations unless a specific exemption has been obtained.

F.3 Principal Units.

F.3.1 Intent. Shock testing of network equipment is performed in same configuration as installed aboard a ship and tested for purposes of ensuring that installed system containing the network equipment will meet the MIL-S-901 requirements.

F.3.2 Constraints. Shock test requirements for Principal Units can vary between ship classes, therefore shock test requirements should be consulted prior to test for each ship class that the component is being tested. MIL-S-901 as used herein refers to the high impact shock test requirement for the respective ship class and is identified in the paragraphs and table below for surface ships, submarines and submarine overhauls.

F.3.3 Method. Perform test in accordance with MIL-S-901, Grade A, Type A.

a. Surface ships. Shock testing requirements for surface ship equipment are established by each class' respective Ship Specification. Generally surface ship specifications require equipment, systems and structures to be shock tested in accordance with MIL-S-901 and the individual ship specification. Requirements with constraints and an exception are listed in table 3202-FI.

MEASUREMENT 3202.1



Source: https://assist.dla.mil -- Downloaded: 2016-12-31T21:01Z
Check the source to verify that this is the current version before use.

b. Submarines. The following table establishes the baseline submarine high impact shock testing requirements for each submarine class.

c. Submarine overhaul. The requirements for overhaul of in-service submarine (SSN-688, SSBN-726, SSGN-726 (Non-SSGN Conversion)) equipment are augmented by NAVSEA 0902-018-2010 General Overhaul Specifications for Deep Diving SSBN/SSN Submarines; dated 1 July 1992. NAVSEA S9070-AA-MME-010/SSN/SSBN Technical Requirements Manual For Temporary Submarine Alterations, THIRD REVISION; dated 18 January 2005 augments the requirements for temporary alterations installed aboard all submarine classes.

F.3.4 Documentation requirements.

a. Documentation. Data Item Description (DID) DI-ENVR-80708 and DI-ENVR-80709 are applicable to surface ships, and can be used for guidance in all submarine classes except for the Virginia class. For Virginia class submarines, use DI-ENVR-80708 Adopted for MIL-S-901D Interim Change #1, Sept 1994 for the Shock Test Report and DI-ENVR-80709 Adopted for MIL-S-901D Interim Change #1, Sept 1994 for the High-Impact Shock Test Procedures.

TABLE 3202-FI. High impact shock test requirements.

| Ship class | High impact |
|---|---|
| Surface ships | MIL-S-901D. |
| Carriers | MIL-S-901D as modified by the Ship Specification (including the addition of lower frequency decks and class II equipment may require special shock testing at 8 Hz). Consult Carrier Program Office. |
| DDG1000 | Ship Specification and Project Particular Document (PPD) No. 802-7651312, Shock (High Impact) Testing, DD(X) Shipboard machinery, Equipment, and Systems, Requirements for. |
| SSN 688 (LOS ANGELES) Class | MIL-S-901C as modified by NAVSEA T9SSN-XG-SBS-010 “Specifications for Building Submarines, SSN 688 class” section 9400-1, table 1. |
| SSBN 726 (OHIO) Class | MIL-S-901C as modified by NAVSEA 0902-LP-027-7010 “Specifications for Building Submarines, SSBN Trident class” section 9400-1, table 1. |
| SSN 21 (SEAWOLF) Class | Project particular document No. 802-6335704 1/ “Shock Tests, H.I. (High Impact) Shipboard Machinery, Equipment, and Systems, Requirements for." |
| SSN 774 (VIRGINIA) Class | MIL-S-901D, amended by interim change #1 2/ “Shock Tests, High Impact Shipboard Machinery, Equipment, and Systems, Requirements for."' |
| SSGN Conversion of SSBN 726 | MIL-S-901C as modified by NAVSEA 0902-LP-027-7010 “Specifications for Building Submarines, SSBN Trident class” sect. 9400-1, table 1 and “SSGN Conversion Ship Specification Addendum”, sect. 9400-1. |

1/ As modified by paragraph 072k of Specifications for Building Submarines, SEAWOLF Class.
2/ As modified by paragraph 072k of Specifications for Building Submarines, New Attack Submarine Class.

MEASUREMENT 3202.1



Source: https://assist.dla.mil -- Downloaded: 2016-12-31T21:01Z
Check the source to verify that this is the current version before use.

b. Submission. Submission of a shock test procedure for NAVSEA 05P13 or their delegated approval authority prior to performance of the LWSM shock test is not required unless test utilizes a non-standard test fixture (refer to F.3.5a(2)).. There is a risk assumed for the supplier (party receiving test services) in the event the LWSM shock test is performed without prior test procedure submission. If the test is considered invalid due to improper test performance, the test may need to be redone.

F.3.5 Special requirement for LWSM testing for network equipment.

a. Mounting considerations.

(1) Interface. The Principal Unit will be mounted on the LWSM in the same manner as in the shipboard installation. Any foundation, stand-offs or other type of interfaces used in the application must be included in mounting the item (DUT) onto the LWSM. Verify that the item (DUT) and any shipboard interface are mounted directly to the standard shock test fixture without the use of any interface (but with required spacers).

(2) Non-standard test fixture. Test procedure approval, by the NAVSEA 05 Delegated Approval Authority (DAA), is required prior to start of testing when a non-standard test fixture is used. An example of using a non-standard test fixture could be in the testing of a drawer level component in lieu of testing the component in its shipboard configured rack. The non-standard fixture could be in form of bookend interface. This non-standard fixture would be used as an interface between the standard LWSM mounting fixture (such as the types 4A, 4C, or 11C) and the item (DUT). Evidence must be provided that the non-standard test fixture provides the same dynamic characteristics as the mounting configuration used in the shipboard application (mass, stiffness, and damping).

(3) Attachment hardware. The same bolt (size, material, and grade) stud or other mounting hardware used to secure the item (DUT) to the bulkhead or deck must be used to secure the item (DUT) to the LWSM. Bolt torque should also be specified.

b. Pass/fail criteria. All criteria for item (DUT) performance during the shock test must be defined, tested and verified to be within specification limits as required in MIL-S-901. For instance, testing must include performance of battle short conditions if those type requirements exist.

c. Accelerometer data. Shock qualification for testing performed on a LWSM is not required to be instrumented with accelerometers to record the shock input. There is one instance where it may be beneficial to instrument with accelerometers for future use. This instance is for shock testing currently performed that may later be used for Shock Qualification by Extension. NAVSEA DAA approval should be obtained prior to the start of testing for the accelerometer instrumentation and the accelerometer mounting method, orientation and locations if data is needed to support the shock extension.

F.4 Subsidiary component.

F.4.1 Intent. MIL-S-901 Type B shock testing of a network equipment component at the level of a subsidiary component shall be performed for the purpose of providing reasonable assurance that the network equipment component will also pass subsequent Type A tests (when tested as a part of one or more Principal Units) and to improve opportunities for shock test extension.

F.4.2 Method. Perform in accordance with MIL-S-901, Grade A, Type B. If attached or mounted in multiple ways for different uses, then network equipment must be tested in each mounting configuration. If one or more severe cases can be identified, then only these cases need to be tested. If network equipment is mounted in a rack, then the same type rail mounting must be used.

MEASUREMENT 3202.1



Source: https://assist.dla.mil -- Downloaded: 2016-12-31T21:01Z
Check the source to verify that this is the current version before use.

F.4.3 Documentation requirements. Data Item Description (DID) DI-ENVR-80708 and DI-ENVR-80709 are applicable to surface ships, and can be used for guidance in all submarine classes except for the Virginia class. For Virginia class submarines, use DI-ENVR-80708 Adopted for MIL-S-901D Interim Change #1, Sept 1994 for the Shock Test Report and DI-ENVR-80709 Adopted for MIL-S-901D Interim Change #1, Sept 1994 for the High-Impact Shock Test Procedures.

F.5 Acceptance criteria. Functional tests, inspections and acceptance criteria to show compliance shall be developed in accordance with MIL-S-901. Special requirements for fiber optic components listed below shall be used as listed in appendix B.



Source: https://assist.dla.mil -- Downloaded: 2016-12-31T21:01Z
Check the source to verify that this is the current version before use.

# CABLE SCRAPING RESISTANCE

1. Purpose. This measurement is intended to provide further direction for equipment, setup, processes, and evaluation criteria for ensuring that the measurement 3203 for cable scraping resistance is done in a consistent manner. To ensure that the risk to the Government of accepting bad measurement data is low, to minimize test variations and to permit more accurate comparison of test results from multiple sources, a “standardized” approach is specified to perform this measurement.

2. Applicable documents.

2.1 General. The documents listed in this section are specified in sections 3, 4, and 5 of this standard practice. This section does not include documents cited in other sections of this standard practice or recommended for additional information or as examples. While every effort has been made to ensure the completeness of this list, document users are cautioned that they must meet all specified requirements of documents cited in sections 3, 4, and 5 of this standard practice, whether or not they are listed.

2.2 Government documents.

2.2.1 Specifications, standards, and handbooks. The following specifications, standards, and handbooks form a part of this document to the extent specified herein. Unless otherwise specified, the issues of these documents are those cited in the solicitation or contract.

DEPARTMENT OF DEFENSE SPECIFICATION

MIL-DTL-24640 - Cables, Light Weight, Electric, Low Smoke, for Shipboard Use, General Specification for.

(Copies of this document are available online at http://quicksearch.dla.mil or from the Standardization Document Order Desk, 700 Robbins Avenue, Building 4D, Philadelphia, PA 19111-5094.)

2.3 Order of precedence. Unless otherwise noted herein or in the contract, in the event of a conflict between the text of this document and the references cited herein, the text of this document takes precedence. Nothing in this document, however, supersedes applicable laws and regulations unless a specific exemption has been obtained.

3. Definitions.

3.1 Scraping resistance. A measurement performed to determine the ability of the cable jacket material to withstand a scraping type wear or damage induced by mechanical means using a sharp hard surface.



Source: https://assist.dla.mil -- Downloaded: 2016-12-31T21:01Z
Check the source to verify that this is the current version before use.

4. Setup. Measurement 3203 shall be conducted in accordance with the setup restrictions specified in 4.1 through 4.10.

4.1 Test apparatus. The test apparatus shall hold the test specimen firmly clamped in a horizontal position with the outer longitudinal surface of the DUT fully exposed. The test apparatus shall rub an edge (a drum with an abrading edge, or equivalent, as shown in figure 3203-1 shall be used) repeatedly over the outer surface of the specimen in such a position that the longitudinal axis of the edge and the specimen are at right angles to each other with the edge and outer surface of the DUT in contact. The clamped end of the cable shall be positioned such that the scraping surface (abrading element) abrades the cable for the length specified. The scraping surface shall consist of high speed tool bits which have been ground on two adjacent longitudinal sides to produce a single, sharp 90 degree longitudinal edge, free of visible nicks. A test weight affixed to the DUT as shown in figure 3203-1 shall control the force exerted normal to the surface of the jacket material. A motor-driven, reciprocating cam mechanism shall be used to deliver an accurate number of abrading strokes in a direction parallel to the longitudinal axis of the DUT. The number of cycles shall be measured by a counter. The length of the stroke shall be 5 cm and the frequency of the stroke shall be 30 cycles (60 strokes) per minute.

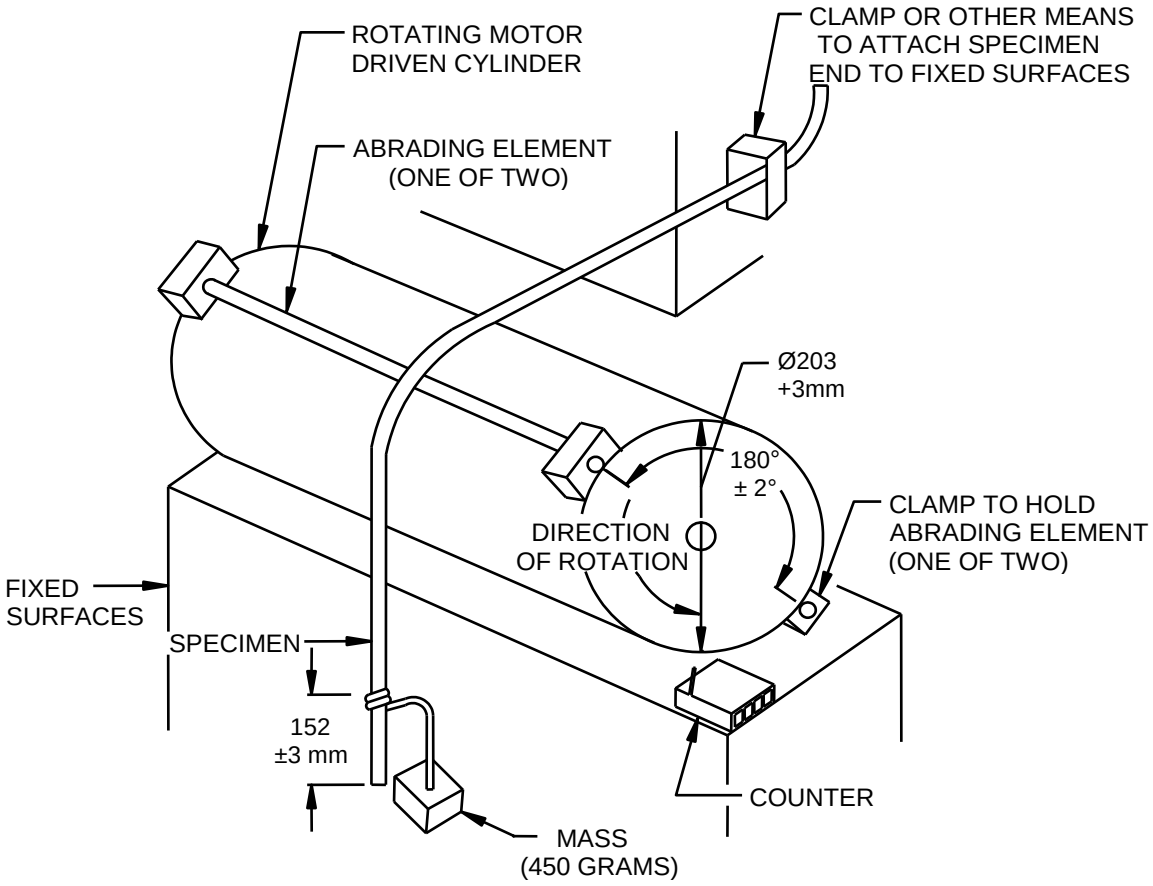


NOTES:

1. The length from the top center of the rotating cylinder to the end of the cable specimen to which the weight is attached shall be a minimum of 762 mm (30 inches).
2. The bottom edge of the clamped specimen shall be level with the top surface of the rotating cylinder.

FIGURE 3203-1. Scraping abrasion test apparatus

MEASUREMENT 3203



Source: https://assist.dla.mil -- Downloaded: 2016-12-31T21:01Z
Check the source to verify that this is the current version before use.

4.2 Measurement equipment.

4.2.1 Weight measurements. Measurement equipment (scale or balance) accuracy shall be ±5 percent of span. Measurement equipment shall be within 10 to 90 percent of the range and have sufficient resolution to obtain measurement to within specified accuracy.

4.2.2 Dimensional measurements. Unless otherwise specified, measurement equipment (instrument or tool) accuracy shall be ±0.02 mm (±.001 inch).

4.2.3 Frequency measurements. Measurement equipment accuracy shall be ±0.2 Hz. Measurement equipment shall have a resolution of 0.5 Hz.

4.2.4 Elapsed cycle measurements (counter). Measurement equipment shall at a minimum measure and display a count of 1,000 cycles.

4.3 Test weight. Verify acceptability of 454 gram (1 lb) weight on scale. Ensure weight is between 450 gram to 458 gram (0.99 pound and 1.01 pound).

4.4 Inspect scraping surface and replace if not suitable.

a. Verify that the scraping surface has a single sharp edge by observing if there are any flat spots (reflections of light).

b. Verify that scraping surfaces are free of visible nicks.

c. Verify that scraping surfaces will not exceed 7,500 cycles during test.

d. Scraping surfaces used shall be a high speed tool bit that conforms to 4.7.1.2 of MIL-DTL-24640.

e. Scraping surfaces shall be reground as required or after a maximum of 5 hours of use as specified in 4.7.1.2 of MIL-DTL-24640.

f. Scraping surfaces shall be replaced whenever the perpendicular distance between either pair of opposite longitudinal sides of an abrading element becomes less than 7.836 mm (.3085 inch).



Source: https://assist.dla.mil -- Downloaded: 2016-12-31T21:01Z
Check the source to verify that this is the current version before use.

4.5 Set frequency counter and drum rotation:

**DANGER:**
**Rotating drum - no safety break.**
**Keep hands and loose clothing clear.**

a. Turn on scraping abrasion test apparatus and frequency counter.

b. Allow the frequency counter to gate several times before attempting to adjust speed control.

c, If no value appears, ensure cables are connected correctly, power is on, and then slowly adjust sensing level and gating delays until a value appears on the counter.

d. Slowly adjust speed control knob on back of scrapping abrasion test apparatus obtaining a value as close as possible to 0.5 Hz (frequency at 30 cycles/minute) on frequency counter display.

e. Turn off scraping abrasion test apparatus.

4.6 Prepare sample cables. ALL MEASUREMENTS ARE MADE FROM END WHERE WEIGHT WILL HANG.

a. Cut a 1067 mm (42 inch) long sample of cable.

b. Measure up 76.2 cm (30 inches) from cable end and mark cable

c. Place three more marks on cable 25.4 mm (1 inch) apart back towards the end you measured from. This will place marks at 68.58 cm, 71.12 cm, 73.66 cm and 76.2 cm (27 inches, 28 inches, 29 inches, and 30 inches.) These marks should ring the cable and not rub off with just simple contact.

d. Move cable down 20.3 cm (8 inches) and place marks at 48.26 cm, 50.80 cm, 53.34 cm, and 55.88 cm (19 inches, 20 inches, 21 inches, and 22 inches).

e. Prepare all samples to be tested.

4.7 Mount cable and test weight to scraping abrasion test apparatus.

a. Mount cable. The 76 cm (30 inch) mark should be centered directly above the top center of scraping drum, and clamped into place.

b. Mount test weight. Using about a 17.78 cm (7 inches) long section of string, tie one end to 1 pound weight and other end of the string 15.24 cm (6 inches) up from end of cable. Place tape at the point of string and cable to prevent slippage of the weight (see figure 3203-1). Dampening material may be placed near test weight to minimize swing (but shall not add to the mass of the test weight).

4.8 Measure cable diameter.

a. Use a ratchet style micrometer or other suitable measurement equipment.

b. Measure the diameter of the cable, at the first set of marked rings and record.

c. The diameter before and after abrasion is being sought so the measurement must be made with one end of the micrometer on the surface to be abraded.



Source: https://assist.dla.mil -- Downloaded: 2016-12-31T21:01Z
Check the source to verify that this is the current version before use.

4.9 Initialize counter. Set stroke counter on scraping abrasion test apparatus to zero.

4.10 Capture/confine cable scrapings. Place trash can under cable to catch cable scrapings. Ensure that test weight is not in contact with sides of trash can.

5. Test procedure. The DUT shall be clamped in the test apparatus and a mass of 0.45 kg (.99 lb) shall be carefully applied by the edge to the surface of the jacket. Two tests shall be performed on each specimen being moved forward 20 cm and rotated clockwise 90 degrees along the longitudinal axis between each test. Each test shall be discontinued when the specified number of cycles is attained for each of the two tests performed on each DUT. Measurement processes shall include 5a through 5c.

a. Perform the cable scraping abrasion test for the following specified number of cycles.

(1) Each cycle = 2 strokes.

(2) Thermoplastic cable jacket: 250 cycles (count = 500).

(3) Thermoset cable jacket: 750 cycles (count = 1,500).

b. Reposition and rotate cable and redo test.

(1) Ensure scraping abrasion test apparatus is off.

(2) Unclamp cable, and move it up 20.32 cm (8 inches) so that the 55.88 cm (22 inch) mark is centered directly above the top center of scraping drum, rotate cable 90 degrees in a clockwise direction and clamp.

(3) Use a ratchet style micrometer or other suitable measurement equipment to measure the diameter of the cable at the first set of marked rings and record. Since the diameter is being sought both before and after abrasion test, obtain the measurement so that one end of the micrometer is on the surface to be abraded.

(4) Set stroke counter on scraping abrasion test apparatus to zero.

(5) Place trash can under cable to catch cable scrapings. Ensure that the test weight is not in contact with sides of trash can.

(6) Redo the cable scraping abrasion test for the following specified number of cycles.

(a) Each cycle = 2 strokes.

(b) Thermoplastic cable jacket: 250 cycles (count = 500).

(c) Thermoset cable jacket: 750 cycles (count = 1,500).

(7) Ensure scraping abrasion test apparatus is off.

(8) Unclamp cable, measure each abraded surface at the marked areas and record.

(9) Repeat 4.7 through 4.10 and 5a to 5b(8) for each sample to be tested.

(10) Calculate the difference for each measurement and record.

MEASUREMENT 3203



Source: https://assist.dla.mil -- Downloaded: 2016-12-31T21:01Z
Check the source to verify that this is the current version before use.

c. Data sheet. In addition to the items for the standard data sheet listed in MIL-STD-1678-2 Measurement 2201, the data sheet shall include the items listed in 5c(1) through 5c(4).

(1) Type of scraping surface (high speed tool bit).

(2) Type of test weight.

(3) Method used to affix test weight onto DUT.

(4) Table with each measurement obtained with units of measure, position on cable, and change (Δ) from pre-test diameter measurement.

6. Notes.

6.1 Intents behind standardization efforts.

6.1.1 Multiple party testing considerations. The incentive to minimize test variables, resulting in a level playing field for multiple parties testing, leads the Government to establish a baseline. This baseline includes considerations for fabrication of test samples, methods to employ launch conditions, and use of specific test practices in addition to specifics for test sample configurations.



Source: https://assist.dla.mil -- Downloaded: 2016-12-31T21:01Z
Check the source to verify that this is the current version before use.

APPENDIX A

CABLE SCRAPING RESISTANCE SAMPLE DATA SHEET

DATA SHEET

CABLE SCRAPING ABRASION TEST (MSA)

DUT description: _____
Item code: _____
Tested by: _____
Test date: _____

| Tube position (mm) | Tube O.D. pre-test (mm) | Tube O.D. post 250 cycles (mm) | Delta tube O.D. post 250 cycles (mm) | Tube O.D. post 750 cycles (mm) | Delta tube O.D. post 750 cycles (mm) | Pass/ fail |
|---|---|---|---|---|---|---|
| | | | | | | |
| | | | | | | |
| | | | | | | |
| | | | | | | |
| | | | | | | |
| | | | | | | |
| | | | | | | |
| | | | | | | |

Comments:

1. Measurement 3202 is found in MIL-STD-1678-3.

2. Delta tube O.D. refers to current tube O.D. relative to pre-test O.D.



Source: https://assist.dla.mil -- Downloaded: 2016-12-31T21:01Z
Check the source to verify that this is the current version before use.

ENVIRONMENTAL MEASUREMENTS

3301 - 3308



Source: https://assist.dla.mil -- Downloaded: 2016-12-31T21:01Z
Check the source to verify that this is the current version before use.

MEASUREMENT 3301

TEMPERATURE-CYCLING.

1. Purpose. This measurement is performed when there is the requirement to subject the FOCT (fiber optic cable topology) component or device under test (DUT) to cyclic effect for stimuli of temperature. This test is intended to be used as part of qualification testing. The applicable commercial test standard cited is for temperature cycling (TIA-455-3) with imposing further refinements or boundaries (constraints). To permit a more accurate comparison of test results from multiple sources and ensure any risk to the Government of accepting misleading optical measurement data is low, a "standardized" approach is specified to perform this measurement.

2. Applicable documents.

2.1 General. The documents listed in this section are specified in sections 3, 4, and 5 of this standard practice. This section does not include documents cited in other sections of this standard practice or recommended for additional information or as examples. While every effort has been made to ensure the completeness of this list, document users are cautioned that they must meet all specified requirements of documents cited in sections 3, 4, and 5 of this standard practice, whether or not they are listed.

2.2 Government documents.

2.2.1 Specifications, standards, and handbooks. The following specifications, standards, and handbooks form a part of this document to the extent specified herein. Unless otherwise specified, the issues of these documents are those cited in the solicitation or contract.

DEPARTMENT OF DEFENSE STANDARD

MIL-STD-1678-2 - Fiber Optic Cabling Systems Requirements and Measurements (Part 2: Optical Measurements).

(Copies of this document are available online at http://quicksearch.dla.mil or from the Standardization Document Order Desk, 700 Robbins Avenue, Building 4D, Philadelphia, PA 19111-5094.)

2.3 Non-Government publications. The following documents form a part of this document to the extent specified herein. Unless otherwise specified, the issues of these documents are those cited in the solicitation or contract.

TELECOMMUNICATIONS INDUSTRY ASSOCIATION

TIA-455-3 - Procedures to Measure Temperature Cycling Effects on Optical Fiber Units, Optical Cable, and Other Passive Fiber Optic Components.

TIA-455-20 - Measurement Methods and Test Procedures-Monitoring of Changes in Optical Transmittance (IEC-60793-1-46 Optical Fibers Part 1-46).

(Copies are available online at www.tiaonline.org or from Telecommunications Industry Association (TIA), 2500 Wilson Boulevard, Suite 300, Arlington VA 22201.)

2.4 Order of precedence. Unless otherwise noted herein or in the contract, in the event of a conflict between the text of this document and the references cited herein, the text of this document takes precedence. Nothing in this document, however, supersedes applicable laws and regulations unless a specific exemption has been obtained.

3. Definitions.

3.1 Temperature cycling test. A test performed to determine the capability of an operational DUT when simulating temperature changes in the surrounding environment.



Source: https://assist.dla.mil -- Downloaded: 2016-12-31T21:01Z
Check the source to verify that this is the current version before use.

4. Test setup.

a. The change in optical transmittance shall be measured during and after the test.

b. Test fixture and other non DUT masses inside the chamber.

(1) Test fixture. If used, test fixture must be of minimum mass and approved by the Government technical authority.

(2) Non DUT masses. No other mass (item that causes significant thermal lag) shall be added inside the chamber.

5. Test procedure.

5.1 Test method. DUT (test samples) shall be tested in accordance with TIA-455-3 for test methodology using the number of cycles, test condition schedule, and ramp/soak times listed in the individual component military specification.

5.1.1 Modification of the temperature cycle. The temperature cycling limits may be modified for conformance with the operating temperature range. Unless otherwise specified, the temperature cycle profile for general applications shall be performed to table 3301-I.

TABLE 3301-I. General applications, temperature cycling steps.

| Step | Temperature (°C) | Duration (hours) |
|---|---|---|
| 1. Maintain | Room ambient | 4 (min) |
| 2. Ramp to | Low operating temp +0, -3 | 2 |
| 3. Maintain | Low operating temp +0, -3 | 2 (min) |
| 4. Ramp to | 25±2 | 2 |
| 5. Maintain | 25±2 | 2 (min) |
| 6. Ramp to | High operating temp +3, -0 | 1 |
| 7. Maintain | High operating temp +3, -0 | 2 (min) |
| 8. Ramp to | 25±2 | 1 |
| 9. Maintain | 25±2 | 2 (min) |
| 10. Repeat steps 2 through 9 four additional times (a total of 5 cycles). | | |

5.1.2 Aircraft applications. Unless otherwise specified, the temperature cycle profile for aircraft applications shall be performed to table 3301-II.

5.1.3 Verification. The checklist in appendix A is provided to ensure compliance for inspection purposes.

5.1.4 Exceptions. Exceptions to TIA-455-3.

5.1.4.1. Do not un-mate connectors. Mated DUTs are not to be un-mated and re-mated between environmental tests. The TIA requirement to mate and un-mate after test is part of inspection. Mated connectors were not un-mated to preserve continuity and reduce variables in testing.

5.1.4.2 Exceeding maximum ramp rate. The TIA maximum ramp rate is 40°C/hr. This ramp rate is exceeded when temperature cycle profile is to table 3301-II, table 3301-III or as specified in the individual component military specification.



Source: https://assist.dla.mil -- Downloaded: 2016-12-31T21:01Z
Check the source to verify that this is the current version before use.

TABLE 3301-II. Aircraft applications, temperature cycling steps – temperature range -55 to +165 $^0$C.

| Step | Cycle | Action | Temperature °C (°F) | Duration 1/, 2/ |
|---|---|---|---|---|
| 1 | 1 | Maintain | 25 +/-2 (77 +/-4) | 4 Hours (minimum) |
| 2 | | Ramp to | -55 +0/-3 (-67 +0/-5) | 40 Minutes (maximum) |
| 3 | | Maintain | -55 +0/-3 (-67 +0/-5) | 15 Minutes (minimum) |
| 4 | | Ramp to | 165 +3/-0 (329 +5/-0) | 55 Minutes (maximum) |
| 5 | | Maintain | 165 +3/-0 (329 +5/-0) | 15 Minutes (minimum) |
| 6 | 2 | Ramp to | -55 +0/-3 (-67 +0/-5) | 110 Minutes (maximum) |
| 7 | | Maintain | -55 +0/-3 (-67 +0/-5) | 15 Minutes (minimum) |
| 8 | | Ramp to | 165 +3/-0 (329 +5/-0) | 55 Minutes (maximum) |
| 9 | | Maintain | 165 +3/-0 (329 +5/-0) | 15 Minutes (minimum) |
| 10 | 3-50 | Repeat steps 6 thru 9, 48 additional times, for a total of 50 cycles. | | |
| 11 | Post 50 | Ramp to | 25 +/-2 (77 +/-4) | 70 Minutes (maximum) |
| 12 | | Maintain | 25 +/-2 (77 +/-4) | 4 Hours (minimum) |

1/ Ramp rate is 4°C per minute or faster for the heating rate, ramp rate is 2 $^0$C per minute or faster for the cooling rate, soak time (maintain step) is 15 minutes. To achieve the specified °C per minute ramp rate, the ramp temperature may exceed the "maintain" temperature up to 4°C for 1 minute until the control system stabilizes the temperature. Leeway for meeting the ramp rate within 20 $^0$C of the temperature limit is allowed if the duration is met.
2/ Duration shall be extended graphically to 1000 hours per 5.3.4 for conformance to optical performance.

TABLE 3301-III. Aircraft applications, temperature cycling steps – temperature range -46 to +85 $^0$C.

| Step | Cycle | Action | Temperature °C (°F) | Duration 1/, 2/ |
|---|---|---|---|---|
| 1 | 1 | Maintain | 25 ± 2 (77 ± 4) | 4 Hours (minimum) |
| 2 | | Ramp to | -46 +0/-3 (-40 +0/-5) | 35.5 Minutes (maximum) |
| 3 | | Maintain | -46 +0/-3 (-40 +0/-5) | 15 Minutes (minimum) |
| 4 | | Ramp to | +85 +3/-0 (185 +5/0) | 32.75 Minutes (maximum) |
| 5 | | Maintain | +85 +3/-0 (185 +5/0) | 15 Minutes (minimum) |
| 6 | 2 | Ramp to | -46 +0/-3 (-40 +0/-5) | 65.5 Minutes (maximum) |
| 7 | | Maintain | -46 +0/-3 (-40 +0/-5) | 15 Minutes (minimum) |
| 8 | | Ramp to | +85 +3/-0 (185 +5/0) | 32.75 Minutes (maximum) |
| 9 | | Maintain | +85 +3/-0 (185 +5/0) | 15 Minutes (minimum) |
| 10 | 3-50 | Repeat steps 6 thru 9, 48 additional times, for a total of 50 cycles. | | |
| 11 | Post 50 | Ramp to | 25 +/-2 (77 +/-4) | 32.5 Minutes (maximum) |
| 12 | | Maintain | 25 +/-2 (77 +/-4) | 4 Hours (minimum) |

1/ Ramp rate is 4°C per minute or faster for the heating rate, ramp rate is 2 $^0$C per minute or faster for the cooling rate, soak time (maintain step) is 15 minutes. To achieve the specified °C per minute ramp rate, the ramp temperature may exceed the "maintain" temperature up to 4°C for 1 minute until the control system stabilizes the temperature. Leeway for meeting the ramp rate within 20 $^0$C of the temperature limit is allowed if the duration is met.
2/ Duration shall be extended graphically to 1000 hours per 5.3.4 for conformance to optical performance.

5.1.4.3 Ramp rate requirement (see 5.1.2). The temperature cycling profiles in tables 3301-I, 3301-II and 3301-III shall expose the DUT to the extremes with the specified intermediate ramp rate. The intent is for this ramp rate to be relatively constant throughout the ramp allotted duration. Performance of this test by transfer from a cold chamber to a hot chamber and the revers does not meet the intent of this test and shall not be employed for the test methodology.

5.1.5 Test interruptions. If interruption exceeds 1 hour, then test must be continued as specified in accordance with 4.3.1.



Source: https://assist.dla.mil -- Downloaded: 2016-12-31T21:01Z
Check the source to verify that this is the current version before use.

5.2 Test synopsis.

a. Mount DUT assemblies in a test fixture, if specified.

b. Perform pre-test visual exam for any damage.

c. Perform setup and allow DUT assemblies to relax and test equipment to stabilize for 24 hours at 25°C.

d. Record pre-test optical transmittance of DUT assemblies at 25°C.

e. Perform test as follows unless otherwise specified in the component military specification:

(1) Use temperature cycle using minimum soak times in accordance with table A of TIA-455-3 and revise for total weight of DUT. (For instance, use a minimum of 4 hours for a maximum test sample weight, including exposed cable, of 3.3 pound or less.) Unless otherwise specified, use table 3301-I for general applications and table 3301-II for aircraft applications. Unless otherwise specified, no revision in the minimum soak time shall be made for measurements performed using table 3301-II and table 3301-III.

(2) Precondition at 25°C for 24 hours.

(3) Perform 5 cycles consisting of the ramp and soak steps listed below. Soak at the specified duration, otherwise use the minimum soak times in accordance with table A of TIA-455-3 for total weight of DUT. If the duration of a ramp is not specified, then refer to 5.1.4.2. Unless otherwise specified, no revisions in the minimum soak time, number of cycles and ramp rate shall be made for tests performed using the temperature profile in table 3301-II.

(a) Ramp down to low operating temperature.

(b) Soak at low operating temperature. (minimum 2 hours in accordance with above for 3.3 pounds or less.)

(c) Ramp up to 25°C ±2°C.

MEASUREMENT 3301



Source: https://assist.dla.mil -- Downloaded: 2016-12-31T21:01Z
Check the source to verify that this is the current version before use.

(d) Soak at 25°C ±2°C.

(e) Ramp up to high operating temperature.

(f) Soak at high operating temperature.

(g) Ramp down to 25°C ±2°C.

(h) Soak at 25°C ±2°C.

(4) Unless otherwise specified, record optical transmittance during each cycle at end of the high temperature plateau and at the end of the low temperature plateau.

(5) Allow DUT assemblies to relax and test equipment to stabilize for 24 hours after the test at 25°C.

(6) Measure and record optical transmittance of DUT assemblies at 25°C.

(7) Perform posttest visual exam (see 5.4).

5.3 Optical measurements.

5.3.1 Change in optical transmittance. The change in optical transmittance shall be measured during and after the test (from a baseline obtained before each test) in accordance with TIA-455-20 for transmitted power adhering strictly to the setup and test procedure specified in MIL-STD-1678-2 measurement 2102. At a minimum for the "during test" measurements, an optical transmittance measurement shall be performed towards the end of each high temperature and low temperature soak period (also referred to as the "maintain step") or as specified in the individual component military specification.

5.3.2 Optical instrumentation capacity. This optical monitoring assumes that an optical measurement system is available with a sufficient channel measurement capability and that only one optical source exists that requires only one monitoring channel (to monitor and compensate for optical source drift).

5.3.3 Allowance in during test measurement frequency. When temperature cycling test is performed in accordance with 5.1.2 (using temperature profile in table 3301-II or table 3301-III), an allowance is provided in the frequency of the during test optical measurements. At a minimum for the "during test" measurements, an optical transmittance measurement shall be performed towards the end of each soak period (maintain step) after every 50 cycles. These during test measurements may be performed at the approximate interval specified but within the 8 hour shift of the test personnel when the test equipment for the optical measurements obtained are not automated and this allowance is granted by the qualifying activity.

5.3.4 Duration extended graphically for optical performance conformance. The optical transmittance at the end of each low temperature plateau for each temperature cycle shall be plotted onto a graph for optical transmittance versus number of cycles. Likewise, the optical transmittance at the end of each high temperature plateau for each temperature cycle shall be plotted onto a graph for optical transmittance versus number of cycles. A regression analysis of each plot using the applicable least squares fit shall be performed. The two trend lines obtained shall be extended to 1000 cycles. The range in the optical transmittance of each trend line to 1000 cycles shall not exceed 0.5 dB.

5.4 Post test visual examination.

5.4.1 Connector. Dependent upon connector construction, DUT visual inspection may include no evidence of mechanical damage, loosening of component parts, separation of bonded surfaces, permanent set, cracking, crazing, stickiness, delaminating, degradation, distortion, separation, deterioration of identification marking, leaking or filling of potting compounds, no other damage detrimental to the operation of the connector.



Source: https://assist.dla.mil -- Downloaded: 2016-12-31T21:01Z
Check the source to verify that this is the current version before use.

5.4.2 Cable. DUT visual inspection of fiber may include no cracking or melting of the fiber coating material. DUT visual inspection of other cable components may include no evidence of permanent set, cracking, crazing, stickiness, delaminating, degradation, distortion.

5.4.3 Other. DUT visual inspection may include no leakage or other apparent loss of sealing capability, no surface or identification marking impairment, nor any damage detrimental to the operation of the test samples.

5.5 Contamination. When test samples are comprised of connectors or termini, the ferrule end face of each connector/termini mated pair shall be inspected for cleanliness after the completion of the test or during specified points during and after the completion of the test, as specified. Inspection shall be performed using a Fiber Optic Video Inspection System (FOVIS). As an option, each end face shall be captured using software provided with the FOVIS. For each cleaning operation performed, a table is requested to summarize the number of cleaning steps, cleaning device, cycle used, and result.

MEASUREMENT 3301



Source: https://assist.dla.mil -- Downloaded: 2016-12-31T21:01Z
Check the source to verify that this is the current version before use.

5.6 Data sheet. In addition to the items for the standard data sheet listed in MIL-STD-1678-2 Measurement 2102, the data sheet is to list the items in 5.6.a through 5.6.d.

a. If DUT being tested are connectors, verify that testing is done with all connectors mated.

b. Specify chamber heating and cooling rates.

c. Specify chamber temperature limits.

d. Specify placement of temperature sensor relative to DUT.

6. Notes.

6.1 Intended use, qualification testing. Stresses are applied to simulate conditions over a lengthy in-service duration and that under the stresses to show compliance with specification requirements.

6.2 Source for profiles.

6.2.1 General applications, for joint service applications. The specification requirements, along with the general temperature profile, were developed by a committee with representatives from different military services and from fiber optic component vendors.

6.2.2 Aircraft applications. The temperature cycling profile for aircraft applications were developed by representatives from the reliability, wiring, and standards and technology communities.

6.2.3 Requirement reduction for temperature profile parameters. Previous testing has discerned that a temperature profile with a 4 degree C/minute ramp rate over a minimum of 500 cycles test is sufficient to identify a difference between the CTE (coefficient of thermal expansion) in the various aerospace optical materials. As a result, an allowance was made to reduce ramp rate and total number of cycles for the temperature profile in table 3301-II. The ramp rate was reduced from 10 degrees C/minute to 4 degrees C/minute and the total number of cycles reduced from 1000 cycles to 500 cycles. In addition, previous testing has discerned that any abrupt response in the optical performance due to a cable issue will be observed within the first three cycles. For fiber optical cables tested to date, an abrupt response will either dampen within 10 cycles or remain. Within 50 cycles, the optical performance will stabilize (including any potential failures). One issue is that the cable provided may needed to be and was not preconditioned. This is one possible reason for an abrupt response that in later cycles has dampened. Once tested past 10 cycles, the cable is likely conditioned. In conclusion, any abrupt change in the optical performance that is considered a failure, included preconditioning, is expected to occur within the first 20 cycles and remain at that optical performance level within the first 50 cycles. To acknowledge that most temperature chamber cooling rap rates are less than those for the heating rate, the cooling rate ramp rate has been further reduced to 2 degrees C/minute.



Source: https://assist.dla.mil -- Downloaded: 2016-12-31T21:01Z
Check the source to verify that this is the current version before use.

MEASUREMENT 3301

APPENDIX A

MINIMUM ESSENTIAL CHECKLIST FOR TEMPERATURE-CYCLING MEASUREMENTS

A.1 Purpose. This appendix addresses a checklist of the minimum essentials for the temperature-cycling measurement.

A.2 Usage. Table 3301A-I is the checklist of minimum essentials for Government auditors, or their representatives, to use during inspections. This checklist should be expanded at the auditor's discretion.

TABLE 3301A-I. Minimum essential checklist for temperature-cycling measurements.

| Item | Category | Description | Requirement | Compliance |
|---|---|---|---|---|
| 1 | Test sample configuration | Cable assembly length: Connectors and splices | 10 meters minimum (13 m if to do 3 cut-backs) | |
| | | Other fiber optic components: See MIL-STD-1678-4 | Complies with part 4 of this standard practice | |
| 2 | Room ambient environmental condition | Standard ambient (if test equipment built to operate in this range, if not-then controlled ambient) | 23°C ±5°C/73°F ±9°F and 20% to 70% RH | |
| | | Controlled ambient | 23°C ±2°C/73°F ± 4°F and 45% to 55% RH | |
| 3 | Test condition | Test setup cable routing | Bend diameters ≥ min long term bend dia. | |
| | | | Sharp twists and bends avoided | |
| | | | Avoid protrusions/other obstacles | |
| 4 | Environmental Chamber charts | Temperature profile recorded | Chart, stored data on disk, other approved means | |
| | | | Includes chamber model and serial, date of test | |
| | | | Recording device accuracy is at least ±1°Cover DUT operating temperature range | |
| | Test equipment | | | |
| 5 | Environmental chamber | Temperature rate of change | Meets minimum, both heating and cooling rates on profile | |
| | | Temperature limits | Exceeds minimum and maximum DUT temperature limits on profile | |
| | | Programmable to perform cycles show in table 3301-I, 3301-II or as specified | Chart/printout shows correct cycle with temperatures and times | |
| 6 | Optical measurements | Change in optical transmittance | Compliance with MIL-STD-1678-2 measurement 2101 | |



Source: https://assist.dla.mil -- Downloaded: 2016-12-31T21:01Z
Check the source to verify that this is the current version before use.

TABLE 3301A-I. Minimum essential checklist for temperature-cycling measurements - Continued.

| Item | Category | Description | Requirement | Compliance |
|---|---|---|---|---|
| 7 | Examinations | Visual inspection | No leakage, loss of sealing capacity, damage detrimental to operation. | |
| | | Ferrule end face contamination | FOVIS inspected and cleaned. Table provided summarizing cleaning steps, cleaning device, cycle used, and result. | |
| | | Optical fiber connections | Routed outside chamber or to an optical interface port at chamber wall | |
| 8 | Test setup | Test fixture, if used | Minimize mass | |
| | | Items to minimize variation in test | Approved by Government tech authority | |
| | | | No other mass inside chamber | |
| | | | Secure/tie down cables (no movement at instrument ports) | |
| | | Test processes | Compliance with measurement 3301 | |
| 9 | Test | Maintain setup during test (source end) | No disconnection allowed until after testing completed (see MIL-STD-1678-2 measurement 2101, 2102 and 2104) | |
| | | Temperature-cycle | Graph or electronic means to verify cycles in accordance with table 3301-I, 3301-II or component mil-spec is obtained | |
| | | Alteration in temperature cycle limits, if altered | Same ramp rates occur | |
| | | | Same temperature soak times maintained | |
| | | Electronically calculated | Verify proper equation in program | |
| 10 | Calculation | Operator performed calculations | Verify correct method used and calculated properly | |
| | | Approved data sheet | Compliance with MIL-STD-1678-2 measurement 2201 | |
| 11 | Data Sheet | Added data sheet requirement | Chamber heating and cooling rates | |
| | | | Chamber temperature limits | |
| | | | Temperature sensing device placement relative to DUT | |
| | | | If connector, was DUT mated or unmated | |
| | | Proper criteria specified | Conforms with SPEC/contract parameters and values | |
| 12 | Pass/fail criteria | Proper criteria implemented | Test operators knows if fail and to verify result | |

A.3 Notes.

A.3.1 Intended use.

A.3.1.1 Audit team. This checklist is intended to assist Government auditors or their representatives during inspections of the optical measurement system. This checklist may be augmented at the auditor's discretion; however, it is not to be reduced.

A.3.1.2 Test laboratories. When test laboratories prepare to perform temperature cycling measurements or audits, this checklist should be used to supplement measurement 3301, not replace it.

MEASUREMENT 3301



Source: https://assist.dla.mil -- Downloaded: 2016-12-31T21:01Z
Check the source to verify that this is the current version before use.

MEASUREMENT 3302

TEMPERATURE-HUMIDITY CYCLING.

1. Purpose. This measurement is performed when there is the requirement to subject the FOCT (fiber optic cable topology) component or device under test (DUT) to humidity along with a cyclic effect for stimuli of temperature. This test is intended to be used as part of qualification testing. The applicable commercial test standard cited is for temperature-humidity cycling (TIA/EIA-455-5) with imposing further refinements or boundaries (constraints). To ensure that the risk to the Government of accepting bad optical measurement data is low, to minimize test variations and to permit more accurate comparison of test results from multiple sources, a "standardized" approach is specified to perform this measurement.

2. Applicable documents.

2.1 General. The documents listed in this section are specified in sections 3, 4, and 5 of this standard practice. This section does not include documents cited in other sections of this standard practice or recommended for additional information or as examples. While every effort has been made to ensure the completeness of this list, document users are cautioned that they must meet all specified requirements of documents cited in sections 3, 4, and 5 of this standard practice, whether or not they are listed.

2.2 Government documents.

2.2.1 Specifications, standards, and handbooks. The following specifications, standards, and handbooks form a part of this document to the extent specified herein. Unless otherwise specified, the issues of these documents are those cited in the solicitation or contract.

DEPARTMENT OF DEFENSE STANDARD

MIL-STD-1678-2 - Fiber Optic Cabling Systems Requirements and Measurements (Part 2: Optical Measurements).

(Copies of this document are available online at http://quicksearch.dla.mil or from the Standardization Document Order Desk, 700 Robbins Avenue, Building 4D, Philadelphia, PA 19111-5094.)

2.2 Non-Government publications. The following documents form a part of this document to the extent specified herein. Unless otherwise specified, the issues of these documents are those cited in the solicitation or contract.

TELECOMMUNICATIONS INDUSTRY ASSOCIATION

TIA-455-20 - Measurement Methods and Test Procedures-Monitoring of Changes in Optical Transmittance (IEC-60793-1-46 Optical Fibers Part 1-46).
TIA/EIA-455-5 - Humidity Test Procedure for Fiber Optic Components.

(Copies are available online at www.tiaonline.org or from Telecommunications Industry Association (TIA), 2500 Wilson Boulevard, Suite 300, Arlington VA 22201.)

2.3 Order of precedence. Unless otherwise noted herein or in the contract, in the event of a conflict between the text of this document and the references cited herein, the text of this document takes precedence. Nothing in this document, however, supersedes applicable laws and regulations unless a specific exemption has been obtained.

3. Definitions.

3.1 Temperature-humidity cycling test. A test performed to determine the capability of an operational DUT when simulating humidity with a condition of cyclic temperature changes in the surrounding environment.



Source: https://assist.dla.mil -- Downloaded: 2016-12-31T21:01Z
Check the source to verify that this is the current version before use.

4. Test setup.

a. The change in optical transmittance shall be measured during and after the test.

b. Test fixture and other non DUT masses inside the chamber.

(1) Test fixture. If used, test fixture must be of minimum mass and approved by the Government technical authority.

(2) Non DUT masses. No other mass (item that causes significant thermal lag) shall be added inside the chamber.

5. Test procedure.

5.1 Test method. DUT (test samples) shall be tested in accordance with TIA/EIA-455-5 for humidity using the temperature-humidity profile in accordance with method B of TIA/EIA-455-5 with the sub-cycle of 7a performed as part of the cycle (with preference for cycles 1, 3, 5, 7, and 9 for standardization).

5.1.1 Modification of the cycle. None permitted.

5.1.2 Aircraft applications. Unless otherwise specified, same test shall be performed.

5.1.3 Verification. The checklist in appendix A is provided to ensure compliance for inspection purposes.

5.1.4 Exceptions. Exceptions to TIA/EIA-455-5.

5.1.4.1 Do not un-mate connectors. Mated DUTs are not to be un-mated and re-mated between environmental tests. The TIA requirement to mate and un-mate after test is part of inspection. Mated connectors were not un-mated to preserve continuity and reduce variables in testing.

5.1.4.2 Stabilization time after test completion. TIA requirement is to allow DUT assemblies to stabilize for 2 hours after the test at 25°C, then measure optical transmittance. Instead, allow the DUT to relax/stabilize for 24 hours to provide sufficient “relaxation” time after an environmental test.

5.1.5 Chamber used.

5.1.5.1 One chamber used. The entire test shall be performed in the same chamber. No movement between chambers for various parts of the cycle is allowed.

5.1.5.2 DUT placement in chamber. DUT shall be placed in the chamber so that no dripping or condensation or restriction of air flow on the DUT occurs.

5.1.5.3 Vent cap in chamber. Chamber shall contain a vent cap to allow escape of any pressure buildup.

5.1.5.4 Wet bulb and dry bulb measurement. If humidity control is sensed by wet bulb and dry bulb thermometers, cleaning of the reservoir and periodic replacement of the wick shall be performed as specified (every 30 days minimum). Minimum air flow across the wet bulb sensor shall be 275 m/min (900 ft./min).

5.1.5.5 Air flow within chamber. Air shall be circulated through the chamber interior at a sufficient rate, but shall not exceed a velocity of 46 m/min (150 ft./min).

5.1.6 Test interruptions. If interruption exceeds 1 hour, then test must be continued as specified in accordance with 4.3.1.

MEASUREMENT 3302



Source: https://assist.dla.mil -- Downloaded: 2016-12-31T21:01Z
Check the source to verify that this is the current version before use.

5.2 Test synopsis.

a. Perform pre-test visual exam for any damage.

b. Mount DUT assemblies in a test fixture, if specified.

c. Place each DUT in chamber so that there is no air flow restriction, does not contact other DUT, and is exposed to same percent RH.

d. Perform setup and allow DUT assemblies to relax and test equipment to stabilize for 24 hours at 25°C.

e. Record pre-test optical transmittance of DUT assemblies at 25°C.

f. Perform test using the temperature-humidity profile in accordance with method B of TIA/EIA-455-5 with the sub-cycle of 7a performed as part of the cycle (with preference for cycles 1, 3, 5, 7, and 9 for standardization).

(1) Perform test for ten cycles. Include the optional sub-cycle in the test. Test temperature range: -10°C to 65°C.

(a) Five 24 hour cycles with temperature range: -10 to 65 $^{o}$C.

(b) Five 24 hour cycles with temperature range: 25 to 65 $^{o}$C.

(c) Humidity held at 90 percent or 95 percent RH during first 16 hours of each cycle and is uncontrolled (off) if the cycle includes the step 7a sub-cycle. Otherwise, the humidity is held at 90 percent or 95 percent RH.

(2) Record optical transmittance during each cycle at end of one high temperature plateau and at the ambient temperature or low temperature (optional sub-cycle) plateau.

(3) Total test duration shall not be less than 240 hours.

(4) Allow DUT assemblies to relax and test equipment to stabilize for 24 hours after the test at 25°C.

(5) Measure and record optical transmittance of DUT assemblies at 25°C.

(6) Perform posttest visual exam (see 5.4).

5.3 Optical measurements.

5.3.1 Change in optical transmittance. The change in optical transmittance shall be measured during and after the test (from a baseline obtained before each test) in accordance with TIA-455-20 for transmitted power adhering strictly to the setup and test procedure specified in MIL-STD-1678-2 Measurement 2102. At a minimum for the “during test” measurements, an optical transmittance measurement shall be performed during each cycle at end of one high temperature plateau and at the ambient temperature or low temperature (optional sub-cycle) plateau or as specified in the individual component military specification.

5.3.2 Optical instrumentation capacity. This optical monitoring assumes that an optical measurement system is available with a sufficient channel measurement capability and that only one optical source exists that requires only one monitoring channel (to monitor and compensate for optical source drift).

5.4 Posttest visual examination.

MEASUREMENT 3302



Source: https://assist.dla.mil -- Downloaded: 2016-12-31T21:01Z
Check the source to verify that this is the current version before use.

5.4.1 Connector. Dependent upon connector construction, DUT visual inspection may include no evidence of mechanical damage, loosening of component parts, separation of bonded surfaces, permanent set, cracking, crazing, stickiness, delaminating, degradation, distortion, separation, deterioration of identification marking, leaking or filling of potting compounds, nor other damage detrimental to the operation of the connector.

5.4.2 Cable. DUT visual inspection of fiber may include no cracking or melting of the fiber coating material. DUT visual inspection of other cable components may include no evidence of permanent set, cracking, crazing, stickiness, delaminating, degradation, nor distortion.

5.4.3 Other. DUT visual inspection may include no leakage or other apparent loss of sealing capability, no surface or identification marking impairment, nor any damage detrimental to the operation of the test samples.

5.5 Contamination. When test samples are comprised of connectors or termini, the ferrule end face of each connector/termini mated pair shall be inspected for cleanliness after the completion of the test or during specified points during and after the completion of the test, as specified. Inspection shall be performed using a Fiber Optic Video Inspection System (FOVIS). As an option, each end face shall be captured using software provided with the FOVIS. For each cleaning operation performed, a table is requested to summarize the number of cleaning steps, cleaning device, cycle used, and result.

5.6 Data sheet. In addition to the items for the standard data sheet listed in MIL-STD-1678-2 Measurement 2201, the data sheet is to list the items in 5.6a through 5.6e.

a. Verification of mated conditions. If DUT being tested are connectors, verify that testing is done with all connectors mated.

b. Specify chamber heating and cooling rates.

c. Specify chamber temperature and humidity limits.

d. Specify placement of temperature sensor relative to DUT.

e. Specify type of humidity sensor.

6. Notes.

6.1 Intended use, qualification testing. Stresses are applied to simulate conditions over a lengthy in-service duration and that under the stresses to show compliance with specification requirements.



Source: https://assist.dla.mil -- Downloaded: 2016-12-31T21:01Z
Check the source to verify that this is the current version before use.

MEASUREMENT 3302

APPENDIX A

MINIMUM ESSENTIAL CHECKLIST FOR TEMPERATURE HUMIDITY CYCLING MEASUREMENTS

A.1 Purpose. This appendix addresses a checklist of the minimum essentials for the temperature-humidity cycling measurement.

A.2 Usage. Table 3302A-I is the checklist of minimum essentials for Government auditors, or their representatives, use during inspections. This checklist should be expanded at the auditor's discretion.

TABLE 3302A-I. Minimum essential checklist for temperature-humidity cycling measurements.

| Item | Category | Description | Requirement | Compliance |
|---|---|---|---|---|
| 1 | Test sample configuration | Cable assembly length: Connectors and splices | 10 meters minimum (13 m if to do 3 cut-backs) | |
| | | Other fiber optic components: See MIL-STD-1678-4 | Complies with Part 4 of this standard practice | |
| 2 | Room ambient environmental condition | Standard ambient (if test equipment built to operate in this range, if not-then controlled ambient) | 23°C ± 5°C/73°F ± 9°F and 20% to 70% RH | |
| | | Controlled ambient | 23°C ± 2°C/73°F ± 4°F and 45% to 55% RH | |
| 3 | Test condition | Test setup cable routing | Bend diameters ≥ min long term bend dia | |
| | | | Sharp twists and bends avoided | |
| | | | Avoid protrusions/other obstacles | |
| 4 | Environmental chamber charts | Temperature and humidity profiles recorded | Chart, stored data on disk, other approved means | |
| | | | Includes chamber model and serial, date of test | |
| | | | Recording device accuracy is at least ±1°Cover test temperature range | |
| | | | Recording device accuracy is at least ±3% RH over test range | |
| | Test equipment | | | |
| 5 | Environmental chamber | Temperature rate of change | Meets minimum, both heating and cooling rates on profile | |
| | | Temperature limits | Exceeds minimum and maximum DUT temperature limits on profile | |
| | | Humidity limits | Exceeds minimum and maximum DUT humidity limits on profile | |
| | | Programmable to perform cycles show TIA/EIA-455-5, method B profile | Chart/printout shows correct cycle with temperatures, humidity and times | |
| | | One chamber used | The entire test performed in the same chamber | |



Source: https://assist.dla.mil -- Downloaded: 2016-12-31T21:01Z
Check the source to verify that this is the current version before use.

TABLE 3302A-I. Minimum essential checklist for temperature-humidity cycling measurements - Continued.

| Item | Category | Description | Requirement | Compliance |
|---|---|---|---|---|
| 5 | Environmental chamber continued | DUT placement in chamber | DUT placed in the chamber so no dripping/condensation or restriction of air flow occurs | |
| | | Vent cap in chamber | Chamber contain a means to vent any pressure buildup | |
| | | If measure with wet bulb and dry bulb sensors/thermometers | Cleaning of reservoir and periodic replacement of the wick performed (every 30 days minimum). Minimum air flow across the wet bulb sensor is 275 m/min (900 ft./min) | |
| | | Air flow within chamber | Air circulated through the chamber interior does not exceed 46 m/min (150 ft./min) | |
| 6 | Optical measurements | Change in optical transmittance | Compliance with MIL-STD-1678-2 measurement 2101 | |
| 7 | Examinations | Visual inspection | No leakage, loss of sealing capacity, damage detrimental to operation. | |
| | | Ferrule end face contamination | FOVIS inspected and cleaned. Table provided summarizing cleaning steps, cleaning device, cycle used, and result. | |
| | | Optical fiber connections | Routed outside chamber or to an optical interface port at chamber wall | |
| 9 | Test setup | Test fixture, if used | Minimize mass | |
| | | Items to minimize variation in test | Approved by Government tech authority | |
| | | | No other mass inside chamber | |
| | | | Secure/tie down cables (no move at instr. ports) | |
| | | Test processes | Compliance with measurement 3302 | |
| 10 | Test | Maintain setup during test (source end) | No disconnection allowed until after testing completed (see MIL-STD-1678-2, measurement 2101, 2102 and 2104) | |
| | | Temperature-humidity cycle | Graph or electronic means to verify cycles in accordance with method B profile | |
| | | Electronically calculated | Verify proper equation in program | |
| 11 | Calculation | Operator performed calculations | Verify correct method used and calculated properly | |
| | | Approved data sheet | Compliance with MIL-STD-1678-2 measurement 2201 | |



Source: https://assist.dla.mil -- Downloaded: 2016-12-31T21:01Z
Check the source to verify that this is the current version before use.

TABLE 3302A-I. Minimum essential checklist for temperature-humidity cycling measurements - Continued.

| Item | Category | Description | Requirement | Compliance |
|---|---|---|---|---|
| 12 | Data sheet | Added data sheet requirement | Chamber heating and cooling rates | |
| | | | Chamber temperature limits | |
| | | | Temperature sensing device placement relative to DUT | |
| | | | If connector, was DUT mated or unmated | |
| | | | Chamber humidity limits | |
| | | | Type of humidity sensor | |
| | | Proper criteria specified | Conforms with SPEC/contract parameters and values | |
| 13 | Pass/fail criteria | Proper criteria implemented | Test operators knows if fail and to verify result | |

A.3 Notes.

A.3.1 Intended use.

A.3.1.1 Audit team. This checklist is intended to assist Government auditors or their representatives during inspections of the optical measurement system. This checklist may be augmented at the auditor's discretion; however, it is not to be reduced.

A.3.1.2 Test laboratories. When test laboratories prepare to perform temperature humidity cycling measurements or audits, this checklist should be used to supplement measurement 3302, not replace it.



Source: https://assist.dla.mil -- Downloaded: 2016-12-31T21:01Z
Check the source to verify that this is the current version before use.

MEASUREMENT 3303

TEMPERATURE LIFE (LIFE AGING).

1. Purpose. This measurement is performed when there is the requirement to subject the FOCT (fiber optic cable topology) component or device under test (DUT) to an elevated temperature effect with a specified duration for stimuli of temperature. This test is intended to be used as part of qualification testing. The applicable commercial test standard cited is for temperature life (TIA/EIA-455-4) with imposing further refinements or boundaries (constraints). To ensure that the risk to the Government of accepting bad optical measurement data is low, to minimize test variations and to permit more accurate comparison of test results from multiple sources, a standardized approach is specified to perform this measurement.

2. Applicable documents.

2.1 General. The documents listed in this section are specified in sections 3, 4, and 5 of this standard practice. This section does not include documents cited in other sections of this standard practice or recommended for additional information or as examples. While every effort has been made to ensure the completeness of this list, document users are cautioned that they must meet all specified requirements of documents cited in sections 3, 4, and 5 of this standard practice, whether or not they are listed.

2.2 Non-Government publications. The following documents form a part of this document to the extent specified herein. Unless otherwise specified, the issues of these documents are those cited in the solicitation or contract.

TELECOMMUNICATIONS INDUSTRY ASSOCIATION

| | | |
|---|---|---|
| TIA-455-20 | - | Measurement Methods and Test Procedures-Monitoring of Changes in Optical Transmittance (IEC-60793-1-46 Optical Fibers Part 1-46). |
| TIA/EIA-455-4 | - | Fiber Optic Component Temperature Life Test. |

(Copies are available online at www.tiaonline.org or from Telecommunications Industry Association (TIA), 2500 Wilson Boulevard, Suite 300, Arlington VA 22201.)

2.3 Order of precedence. Unless otherwise noted herein or in the contract, in the event of a conflict between the text of this document and the references cited herein, the text of this document takes precedence. Nothing in this document, however, supersedes applicable laws and regulations unless a specific exemption has been obtained.

3. Definitions.

3.1 Temperature life test. A test performed to determine the capability of an operational DUT when stimulated at an elevated temperature for a specified duration. This test is usually performed at or below the maximum temperature found in service and for a prolonged duration.

3.2 Life aging test. A test performed to determine the capability of an operational DUT when the stimulus is applied at an elevated level beyond that found in operation (or beyond the DUT rating) with an accompanied reduction in the test duration. For a temperature stimulus, this test is usually performed above the maximum temperature found in service. The test temperature may be referred to as the accelerated aging temperature. The higher the accelerated aging temperature, the further the reduction in the test duration.

3.3 Life aging (temperature life). This terminology may be used when the test is performed for different environmental conditions, where at least one test is an accelerated aging test and at least one is done at the maximum service temperature limit for a prolong duration, or for a test where either the accelerated aging temperature or maximum service temperature is specified.



Source: https://assist.dla.mil -- Downloaded: 2016-12-31T21:01Z
Check the source to verify that this is the current version before use.

4. Test setup.

a. The change in optical transmittance shall be measured after the test. For engineering analysis purposes, Optical transmittance measurements may be obtained during the test for engineering informational purposes (and is encouraged), but shall not be considered in determining if the DUT met the pass/fail criteria.

b. Test fixture and other non DUT masses inside the chamber.

(1) Test fixture. If used, test fixture must be of minimum mass and approved by the Government technical authority.

(2) Non DUT masses. No other mass (item that causes significant thermal lag) shall be added inside the chamber.

5. Test procedure.

5.1 Test method. DUT (test samples) shall be tested in accordance with TIA/EIA-455-4 for test methodology using the test temperature and test duration listed in the individual component military specification.

5.1.1 Modification of the test temperature. When an accelerated aging test is performed and the material conditions of the DUT cannot withstand the accelerated aging temperature, the temperature may be reduced if approved by the qualifying activity. As a rule of thumb, the duration of the test may be increased by a factor of 2 for every 10 $^{0}$C decrease in temperature. For purposes of testing consistency and potential introduction of other variables, the test temperature shall not be increased to allow for a reduction in test duration.

5.1.2 Aircraft applications. Unless otherwise specified, DUT shall be tested in accordance with TIA/EIA-455-4 for the duration of 1,000 hours at the high exposure temperature of 165°C +5°C, -0°C.

5.1.3 Verification. The checklist in appendix A is provided to ensure compliance for inspection purposes.

5.1.4 Exceptions. Exceptions to TIA/EIA-455-4.

5.1.4.1 Do not un-mate connectors. Mated DUTs are not to be un-mated and re-mated between environmental tests. The TIA requirement to mate and un-mate after test as part of inspection. Mated connectors were not un-mated to preserve continuity and reduce variables in testing.

5.1.4.2 Stabilization time after test completion. TIA requirement is to allow DUT assemblies to stabilize for 2 hours after the test at 25°C, then measure optical transmittance. Instead, allow the DUT to relax/stabilize for 24 hours to provide sufficient relaxation time after an environmental test.

5.1.4.3 Cable retention. TIA requirement to perform cable retention test as part of final inspection for this test. A separate cable retention test shall not be required.

5.1.5 Chamber used.

5.1.5.1 One chamber used. The entire test shall be performed in the same chamber.

5.1.5.2 DUT placement in chamber. DUT shall be placed in the chamber so that no restriction of air flow on the DUT occurs.

5.1.5.3 Air flow within chamber. If air is circulated through the chamber interior, the flow rate shall not exceed a velocity of 46 m/min (150 ft./min).



Source: https://assist.dla.mil -- Downloaded: 2016-12-31T21:01Z
Check the source to verify that this is the current version before use.

5.1.6 Test interruptions. If interruption exceeds 1 hour, then test must be continued as specified in accordance with 4.3.1.

5.2 Test synopsis.

a. Perform pre-test visual exam for any damage.

b. Mount DUT assemblies in a test fixture, if specified.

c. Place each DUT in chamber so that: No air flow restriction, does not contact another DUT.

d. Perform setup and allow DUT assemblies to relax and test equipment to stabilize for 24 hours at 25°C.

e. Record pre-test optical transmittance of DUT assemblies at 25°C.

f. Perform test in accordance with TIA/EIA-455-4 for test methodology using the test temperature and soak time listed in the individual component military specification.

(1) Ramp up to the specified accelerated aging temperature or maximum service temperature. It is recommended that this ramp be performed in not less than 2 hours.

(2) Soak at accelerated aging or maximum service temperature for the specified soak duration.

(3) Optional (for engineering information only): Record optical transmittance periodically (such as daily).

(4) Ramp down to 25±2°C after the total test duration or temperature soak is completed. It is recommended that this ramp be performed in not less than 2 hours.

(5) Allow DUT assemblies to relax and test equipment to stabilize for 24 hours after the test at 25°C.

(6) Measure and record optical transmittance of DUT assemblies at 25°C.

(7) Perform posttest visual exam (see 5.4).

5.3 Optical measurements.

5.3.1 Change in optical transmittance. The change in optical transmittance shall be measured after the test (from a baseline obtained before each test) in accordance with TIA-455-20 for transmitted power adhering strictly to the setup and test procedure specified in MIL-STD-1678-2 measurement 2102.

5.3.2 Optical instrumentation capacity. This optical monitoring assumes that an optical measurement system is available with a sufficient channel measurement capability and that only one optical source exists that requires only one monitoring channel (to monitor and compensate for optical source drift).

5.4 Posttest visual examination.

5.4.1 Connector. Dependent upon connector construction, DUT visual inspection may include no evidence of mechanical damage, loosening of component parts, separation of bonded surfaces, permanent set, cracking, crazing, stickiness, delaminating, degradation, distortion, separation, deterioration of identification marking, leaking or filling of potting compounds, no other damage detrimental to the operation of the connector.



Source: https://assist.dla.mil -- Downloaded: 2016-12-31T21:01Z
Check the source to verify that this is the current version before use.

5.4.2 Cable. DUT visual inspection of fiber may include no cracking or melting of the fiber coating material. DUT visual inspection of other cable components may include no evidence of permanent set, cracking, crazing, stickiness, delaminating, degradation, nor distortion.

5.4.3 Other. DUT visual inspection may include no leakage or other apparent loss of sealing capability, no surface or identification marking impairment, nor any damage detrimental to the operation of the test samples.

5.5 Contamination. When test samples are comprised of connectors or termini, the ferrule end face of each connector/termini mated pair shall be inspected for cleanliness after the completion of the test or during specified points during and after the completion of the test, as specified. Inspection shall be performed using a Fiber Optic Video Inspection System (FOVIS). As an option, each end face shall be captured using software provided with the FOVIS. For each cleaning operation performed, a table is requested to summarize the number of cleaning steps, cleaning device, cycle used, and result.

5.6 Data sheet. In addition to the items for the standard data sheet listed in MIL-STD-1678-2 Measurement 2201, the data sheet is to list the items in 5.6a through 5.6f.

a. Verification of mated conditions. If DUT being tested are connectors, verify that testing is done with all connectors mated.

b. Specify chamber heating rate.

c. Specify chamber high temperature limit.

d. Specify placement of temperature sensor relative to DUT.

e. Specify test accelerated aging temperature or maximum service temperature.

f. Specify test soak duration.

6. Notes.

6.1 Intended use, qualification testing. Stresses are applied to simulate conditions over a lengthy in-service duration and that under the stresses to show compliance with specification requirements.



Source: https://assist.dla.mil -- Downloaded: 2016-12-31T21:01Z
Check the source to verify that this is the current version before use.

APPENDIX A

MINIMUM ESSENTIAL CHECKLIST FOR TEMPERATURE LIFE MEASUREMENTS

A.1. Purpose. This appendix addresses a checklist of the minimum essentials for the temperature life measurement.

A.2. Usage. Table 3303A-I is the checklist of minimum essentials for Government auditors, or their representatives, used during inspections. This checklist should be expanded at the auditor's discretion.

TABLE 3303A-I. Minimum essential checklist for temperature life measurements.

| Item | Category | Description | Requirement | Compliance |
|---|---|---|---|---|
| 1 | Test sample configuration | Cable assembly length: Connectors and splices | 10 meters minimum (13 m if to do 3 cut-backs) | |
| | | Other fiber optic components: See MIL-STD-1678-4 | Complies with Part 4 of this standard practice | |
| 2 | Room ambient environmental condition | Standard ambient (if test equipment built to operate in this range, if not-then controlled ambient) | 23°C ±5°C/73°F ±9°CF and 20% to 70% RH | |
| | | Controlled ambient | 23°C ±2°C/73°F ± 4°F and 45% to 55% RH | |
| 3 | Test condition | Test setup cable routing | Bend diameters ≥ min long term bend dia | |
| | | | Sharp twists and bends avoided | |
| | | | Avoid protrusions/other obstacles | |
| 4 | Environmental chamber charts | Temperature soak recorded | Chart, stored data on disk, other approved means | |
| | | | Includes chamber model and serial, date of test | |
| | | | Recording device accuracy is at least ±1°Cover test temperature range | |
| 5 | Test equipment | | | |
| | | Temperature limit | Exceeds maximum DUT temperature limit | |
| | | Programmable to perform soak in accordance with TIA/EIA-455-4 for specified duration | Chart/printout shows correct temperature and duration | |
| | | One chamber used | The entire test performed in the same chamber | |
| | | DUT placement in chamber | DUT placed in the chamber so no restriction of air flow occurs | |
| | | Vent cap in chamber | Chamber contain a means to vent any pressure buildup | |
| | | Air flow within chamber | If air circulated through the chamber interior, flow does not exceed 46 m/min (150 ft./min) | |



Source: https://assist.dla.mil -- Downloaded: 2016-12-31T21:01Z
Check the source to verify that this is the current version before use.

TABLE 3303A-I. Minimum essential checklist for temperature life measurements - Continued.

| Item | Category | Description | Requirement | Compliance |
|---|---|---|---|---|
| 6 | Optical measurements | Change in optical transmittance | Compliance with MIL-STD-1678-2 measurement 2101 | |
| 7 | Examinations | Visual inspection | No leakage, loss of sealing capacity, or damage detrimental to operation. | |
| | | Ferrule end face contamination | FOVIS inspected and cleaned. Table provided summarizing cleaning steps, cleaning device, cycle used, and result. | |
| | | Optical fiber connections | Routed outside chamber or to an optical interface port at chamber wall | |
| 9 | Test setup | Test fixture, if used | Minimize mass | |
| | | Items to minimize variation in test | Approved by Government tech authority | |
| | | | No other mass inside chamber | |
| | | | Secure/tie down cables (no move at instr. ports) | |
| | | Test processes | Compliance with measurement 3303 | |
| 10 | Test | Maintain setup during test (source end) | No disconnection allowed until after testing completed (see MIL-STD-1678-2 measurements 2101, 2102 and 2104) | |
| | | Temperature tested and duration performed | Graph or electronic means to verify temperature maintained for specified duration | |
| | | Electronically calculated | Verify proper equation in program | |
| 11 | Calculation | Operator performed calculations | Verify correct method used and calculated properly | |
| | | Approved data sheet | Compliance with MIL-STD-1678-2 Measurement 2201 | |
| 12 | Data Sheet | Added data sheet requirement | Chamber heating rate | |
| | | | Chamber temperature limit | |
| | | | Temperature sensing device placement relative to DUT | |
| | | | If connector, was DUT mated or unmated | |
| | | | Accelerated aging temperature or maximum service temperature at which test performed | |
| | | | Duration of soak at test temperature | |
| | | Proper criteria specified | Conforms with spec/contract parameters and values | |
| 13 | Pass/fail criteria | Proper criteria implemented | Test operators knows if fail and to verify result | |



Source: https://assist.dla.mil -- Downloaded: 2016-12-31T21:01Z
Check the source to verify that this is the current version before use.

A.3 Notes.

A.3.1 Intended use.

A.3.1.1 Audit team. This checklist is intended to assist Government auditors or their representatives during inspections of the optical measurement system. This checklist may be augmented at the auditor's discretion; however, it is not to be reduced.

A.3.1.2 Test laboratories. When test laboratories prepare to perform temperature life measurements or audits, this checklist should be used to supplement measurement 3303, not replace it.



Source: https://assist.dla.mil -- Downloaded: 2016-12-31T21:01Z
Check the source to verify that this is the current version before use.

MEASUREMENT 3304

THERMAL SHOCK

1. Purpose. This measurement is performed when there is the requirement to subject the FOCT (fiber optic cable topology) component or device under test (DUT) to sudden changes in the stimuli of temperature that can occur in service during use, in shipment or in storage. This test is intended to be used as part of qualification testing. The applicable commercial test standard cited is for thermal shock (TIA-455-71) with imposing further refinements or boundaries (constraints). To ensure that the risk to the Government of accepting bad optical measurement data is low, to minimize test variations and to permit more accurate comparison of test results from multiple sources, a "standardized" approach is specified to perform this measurement.

2. Applicable documents.

2.1 General. The documents listed in this section are specified in sections 3, 4, and 5 of this standard practice. This section does not include documents cited in other sections of this standard practice or recommended for additional information or as examples. While every effort has been made to ensure the completeness of this list, document users are cautioned that they must meet all specified requirements of documents cited in sections 3, 4, and 5 of this standard practice, whether or not they are listed.

2.2 Non-Government publications. The following documents form a part of this document to the extent specified herein. Unless otherwise specified, the issues of these documents are those cited in the solicitation or contract.

TELECOMMUNICATIONS INDUSTRY ASSOCIATION

| | | |
|---|---|---|
| TIA-455-20 | - | Measurement Methods and Test Procedures-Monitoring of Changes in Optical Transmittance (IEC-60793-1-46 Optical Fibers Part 1-46). |
| TIA-455-71 | - | Procedure to Measure Temperature - Shock Effects on Fiber Optic Components. |

(Copies are available online at www.tiaonline.org or from Telecommunications Industry Association (TIA), 2500 Wilson Boulevard, Suite 300, Arlington VA 22201.)

2.3 Order of precedence. Unless otherwise noted herein or in the contract, in the event of a conflict between the text of this document and the references cited herein, the text of this document takes precedence. Nothing in this document, however, supersedes applicable laws and regulations unless a specific exemption has been obtained.

3. Definitions.

3.1 Thermal shock. A test performed to determine the capability of an operational DUT when simulating sudden or rapid temperature changes in the surrounding environment that can occur in service during use, in shipment or in storage. The temperature ramps in each cycle performed are intended to be shock ramps as opposed to more gradual ramps found in a temperature cycling test.



Source: https://assist.dla.mil -- Downloaded: 2016-12-31T21:01Z
Check the source to verify that this is the current version before use.

4. Test setup.

a. The change in optical transmittance shall be measured after the test for general applications and measured during and after the test for aircraft applications.

b. Test fixture and other non-DUT masses inside the chamber.

(1) Test fixture. If used, test fixture must be of minimum mass and approved by the Government technical authority.

(2) Non-DUT masses. No other mass (item that causes significant thermal lag) shall be added inside the chamber.

(3) Transfer pans. When two chambers are used, the recommendation is made to place the DUT in pan to facilitate chamber transfer (connecting fixture may be used instead, if suitable for the transferring process). If metallic, line the transferring pan with low thermally conductive material at points that come into contact with DUT.

5. Test procedure.

5.1 Test method. DUT (test samples) shall be tested in accordance with TIA-455-71 for test methodology using the number of cycles, test condition schedule, and ramp/soak times either as specified in table 1 of TIA-455-71 for the test condition schedule or as listed in the individual component military specification.

5.1.1 Modification of the temperature limits. The temperature limits may be modified for conformance with the storage, non-operating temperature or operating temperature range, as applicable. Unless otherwise specified, the temperature ramp/soak times/test condition schedule shall be as specified in the individual component military specification.

5.1.2 Aircraft applications. Unless otherwise specified, DUT shall be tested in accordance with TIA-455-71, schedule C-0 (5 cycles). The temperatures of -55°C +0°C/-5°C and 165°C +5°C/-0°C shall be used for the low and high soak temperatures, respectively. The change in optical transmittance shall be measured during (towards the end of each soak temperature) and after the test.

5.1.3 Verification. The checklist in appendix A is provided to ensure compliance for inspection purposes.

5.1.4 Exceptions. Exceptions to TIA-455-71.

5.1.4.1 Do not un-mate connectors. Mated DUTs are not to be un-mated and re-mated between environmental tests. The TIA requirement to mate and un-mate after test as part of inspection. Mated connectors were not un-mated to preserve continuity and reduce variables in testing.

5.1.4.2 Recording times for optical transmittance. See 5.1.2 and 5.3.1.2 for additional measurements required in aircraft applications.

5.1.5 Test interruptions. If interruption exceeds 1 hour, then test must be continued as specified in accordance with 4.3.1.



Source: https://assist.dla.mil -- Downloaded: 2016-12-31T21:01Z
Check the source to verify that this is the current version before use.

5.1.6 Number of chambers used.

5.1.6.1 If one chamber used. The entire test may be performed in the same chamber only if the 5 minute ramp rates (both from high-to-low temperature limits and from low-to-high temperature limits) can be achieved.

5.1.6.2 If two chambers are used. The entire test may be performed in two chambers only if transport of DUT with attached cabling can be achieved in under 5 minutes and only if the chamber can recover to the specify temperature limit within 10 percent of the temperature soak (exposure) time. Chamber shall be configured so that ports or cable notches allow transfer of DUT with attached cabling well within the 5 minute allowed limit. For a two chamber transfer, chambers with cable notches are recommended.

5.1.7 Chamber considerations.

5.1.7.1 DUT placement in chamber. DUT shall be placed in the chamber so that no restriction of air flow on the DUT occurs.

5.1.7.2 Air flow within chamber. Air shall be circulated through the chamber interior, the flow rate shall not exceed a velocity of 46 m/min (150 ft./min).

5.2 Test synopsis.

a. Mount DUT assemblies in a test fixture, if one is used.

b. Perform pre-test visual exam for any damage.

c. Perform setup and allow DUT assemblies to relax and test equipment to stabilize for 24 hours at 25°C.

d. Record pre-test optical transmittance of DUT assemblies at 25°C.

e. Unless otherwise specified in the component military specification, perform test as follows: DUT shall be tested in accordance with TIA-455-71, schedule C-0 (5 cycles). Perform 5 cycle thermal shock test as specified in 5.2e(1) through 5.2e(9), when two chambers are used to perform the test.

(1) Test high and low temperature limits. The temperatures are specified either in the test condition schedule or listed in the individual component military specification.

(2) Soak times. Use minimum soak times in accordance with table 2 of TIA-455-71 and revise for total weight of DUT. Unless otherwise specified, no revision in the minimum soak time shall be made.

NOTE: Soak time is dependent upon total weight of DUTs and test fixtures (including transfer pan).

| Test sample mass (lb) in accordance with TIA | Soak time (hr.) |
|---|---|
| $M < 0.7$ | 0.5 |
| $0.7 < M \leq 1.5$ | 1.0 |
| $1.5 < M \leq 3.3$ | 2.0 |
| $3.3 < M \leq 33$ | 4.0 |
| $33 < M \leq 220$ | 8.0 |

(3) Soak DUT assemblies at low temperature limit (see 5.2e(1)) for specified soak duration (see 5.2e(2)). For aircraft applications, record optical transmittance during final 5 minutes of soak.

(4) Transfer DUT assemblies to chamber stabilized at the high temperature limit within a 5 minute transition time.



Source: https://assist.dla.mil -- Downloaded: 2016-12-31T21:01Z
Check the source to verify that this is the current version before use.

(5) Soak DUT assemblies at high temperature limit (see 5.2e(1)) for specified soak duration (see 5.2e(2)). For aircraft applications, record optical transmittance during final 5 minutes of soak.

(6) Repeat steps 5.2e(3) and 5.2e(4) for 4 additional cycles (or the number of cycles specified).

(7) Allow DUT assemblies to relax and test equipment to stabilize for 24 hours after the test at 25°C.

(8) Measure and record optical transmittance of DUT assemblies at 25°C.

(9) Perform posttest visual exam (see 5.4).

5.3 Optical measurements.

5.3.1 Change in optical transmittance.

5.3.1.1 General applications. The change in optical transmittance shall be measured during after the test (from a baseline obtained before each test) in accordance with TIA-455-20 for transmitted power adhering strictly to the setup and test procedure specified in MIL-STD-1678-2 measurement 2102.

5.3.1.2 Aircraft applications. The change in optical transmittance shall be measured during and after the test (from a baseline obtained before each test) in accordance with TIA-455-20 for transmitted power adhering strictly to the setup and test procedure specified in MIL-STD-1678-2 measurement 2102. At a minimum for the “during test” measurements, an optical transmittance measurement shall be performed towards the end of each high temperature and low temperature soak period (also referred to as the “maintain step”) or as specified in the individual component military specification. The rapid excursions of temperature that occur during the operation of aircraft mandate simulating this in-service condition during testing by obtaining optical transmittance measurements during the test.

5.3.2 Optical instrumentation capacity. This optical monitoring assumes that an optical measurement system is available with a sufficient channel measurement capability and that only one optical source exists that requires only one monitoring channel (to monitor and compensate for optical source drift).

5.4 Posttest visual examination.

5.4.1 Connector. Dependent upon connector construction, DUT visual inspection may include no evidence of mechanical damage, loosening of component parts, separation of bonded surfaces, permanent set, cracking, crazing, stickiness, delaminating, degradation, distortion, separation, deterioration of identification marking, leaking or filling of potting compounds, nor other damage detrimental to the operation of the connector.

5.4.2 Cable. DUT visual inspection of fiber may include no cracking or melting of the fiber coating material. DUT visual inspection of other cable components may include no evidence of permanent set, cracking, crazing, stickiness, delaminating, degradation, nor distortion.

5.4.3 Other. DUT visual inspection may include no leakage or other apparent loss of sealing capability, no surface or identification marking impairment, nor any damage detrimental to the operation of the test samples.

5.5 Contamination. When test samples are comprised of connectors or termini, the ferrule end face of each connector/termini mated pair shall be inspected for cleanliness after the completion of the test or during specified points during and after the completion of the test, as specified. Inspection shall be performed using a Fiber Optic Video Inspection System (FOVIS). As an option, each end face shall be captured using software provided with the FOVIS. For each cleaning operation performed, a table is requested to summarize the number of cleaning steps, cleaning device, cycle used, and result.



Source: https://assist.dla.mil -- Downloaded: 2016-12-31T21:01Z
Check the source to verify that this is the current version before use.

5.6 Data sheet. In addition to the items for the standard data sheet listed in MIL-STD-1678-2 measurement 2201, the data sheet is to list the items in 5.6a through 5.6g.

a. Verification of mated conditions. If DUT being tested are connectors, verify that testing is done with all connectors mated.

b. Specify chamber heating and cooling rates.

c. Specify chamber temperature limits.

d. Specify placement of temperature sensor relative to DUT.

e. Specify high and low test temperature limits.

f. Specify combined weight of DUT, portion of DUT cabling inside the chamber and any fixture or transfer pan used.

g. Specify test soak duration used based on the combined weight.

6. Notes.

6.1 Intended use, qualification testing. Stresses are applied to show compliance with specification requirements.



Source: https://assist.dla.mil -- Downloaded: 2016-12-31T21:01Z
Check the source to verify that this is the current version before use.

APPENDIX A

MINIMUM ESSENTIAL CHECKLIST FOR THERMAL SHOCK MEASUREMENTS

A.1 Purpose. This appendix addresses a checklist of the minimum essentials for the thermal shock measurement.

A.2 Usage. Table 3304A-I is the checklist of minimum essentials for Government auditors, or their representatives, to use during inspections. This checklist should be expanded at the auditor's discretion.

TABLE 3304A-I. Minimum essential checklist for thermal shock measurements.

| Item | Category | Description | Requirement | Compliance |
|---|---|---|---|---|
| 1 | Test sample configuration | Cable assembly length: Connectors and splices | 10 meters minimum (13 m to do 3 cut-backs) | |
| | | Other fiber optic components: See MIL-STD-1678-4 | Complies with part 4 of this standard practice | |
| 2 | Room ambient environmental condition | Standard ambient (if test equipment built to operate in this range, if not-then controlled ambient) | 23°C ±5°C/73°F ±9°F and 20% to 70% RH | |
| | | Controlled ambient | 23°C ±2°C/73°F ±4°F and 45% to 55% RH | |
| 3 | Test condition | Test setup cable routing | Bend diameters ≥ min long term bend diameter | |
| | | | Sharp twists and bends avoided | |
| | | | Avoid protrusions/other obstacles | |
| 4 | Environmental chamber charts | Temperature profile recorded | Chart, stored data on disk, other approved means | |
| | | | Includes chamber model and serial, date of test | |
| | | | Recording device accuracy is at least ±2°Cover DUT operating temperature range | |
| | Test equipment | | | |
| 5 | Environmental chamber | Temperature rate of change | Meets minimum, both heating and cooling rates on profile | |
| | | Temperature limits | Exceeds minimum and maximum test high and low temperature limits | |
| | | Programmable or controlled to maintain temperatures or as specified | Chart/printout shows correct cycle/potion of cycle with temperatures and times | |
| 6 | Optical measurements | Change in optical transmittance | Compliance with MIL-STD-1678-2 measurement 2101 | |



Source: https://assist.dla.mil -- Downloaded: 2016-12-31T21:01Z
Check the source to verify that this is the current version before use.

TABLE 3304A-I. Minimum essential checklist for thermal shock measurements - Continued.

| Item | Category | Description | Requirement | Compliance |
|---|---|---|---|---|
| 7 | Examinations | Visual inspection | No leakage, loss of sealing capacity, damage detrimental to operation | |
| | | Ferrule end face contamination | FOVIS inspected and cleaned. Table provided summarizing cleaning steps, cleaning device, cycle used, and result. | |
| | | Optical fiber connections | Routed outside chamber or to an optical interface port at chamber wall | |
| 9 | Test setup | Test fixture, if used | Minimize mass | |
| | | Items to minimize variation in test | Approved by Government tech authority | |
| | | | No other mass inside chamber | |
| | | | Secure/tie down cables (no move at instr. ports) | |
| | | Test processes | Compliance with measurement 3304 | |
| 10 | Test | Maintain setup during test (source end) | No disconnection allowed until after testing completed (see MIL-STD-1678-2 measurements 2101, 2102, and 2104) | |
| | | Temperature-cycle | Graph or electronic means to verify cycles in accordance with TIA-455-71 or component mil-spec is obtained | |
| | | Alteration in temperature cycle limits, if altered | 5 minute transfer rate occurred. Chamber recovered within 10 minutes of soak duration | |
| | | | Same temperature soak times maintained | |
| | | Electronically calculated | Verify proper equation in program | |
| 11 | Calculation | Operator performed calculations | Verify correct method used and calculated properly | |
| | | Approved data sheet | Compliance with MIL-STD-1678-2 measurement 2201 | |



Source: https://assist.dla.mil -- Downloaded: 2016-12-31T21:01Z
Check the source to verify that this is the current version before use.

TABLE 3304A-I. Minimum essential checklist for thermal shock measurements - Continued.

| Item | Category | Description | Requirement | Compliance |
|---|---|---|---|---|
| 12 | Data sheet | Added data sheet requirement | Chamber heating and cooling rates | |
| | | | Chamber temperature limits | |
| | | | Temperature sensing device placement relative to DUT | |
| | | | If connector, was DUT mated or unmated | |
| | | | High and low test temperature limits | |
| | | | Combined weight of DUT, portion of DUT cabling inside the chamber and any fixture or transfer pan used | |
| | | | Test soak duration used based on the combined weight | |
| | | Proper criteria specified | Conforms with spec/contract parameters and values | |
| 13 | Pass/fail criteria | Proper criteria implemented | Test operators knows if fail and to verify result | |

A.3 Notes.

A.3.1 Intended use.

A.3.1.1 Audit team. This checklist is intended to assist Government auditors or their representatives during inspections of the optical measurement system. This checklist may be augmented at the auditor's discretion; however, it is not to be reduced.

A.3.1.2 Test laboratories. When test laboratories prepare to perform thermal shock measurements or audits, this checklist should be used to supplement measurement 3304, not replace it.



Source: https://assist.dla.mil -- Downloaded: 2016-12-31T21:01Z
Check the source to verify that this is the current version before use.

MEASUREMENT 3305

ALTITUDE IMMERSION

1. Purpose. This measurement is performed when there is the requirement to subject the FOCT (fiber optic cable topology) component or device under test (DUT) to sudden or rapid descents from high to low altitudes with the accompanied condensation of moisture. Multiple rapid descents are simulated with a cyclic effect for the stimulus of altitude. This test is intended to be used as part of qualification testing. The applicable commercial test standard cited is for altitude immersion (TIA-455-15) with imposing further refinements or boundaries (constraints). To ensure that the risk to the Government of accepting bad optical measurement data is low, to minimize test variations and to permit more accurate comparison of test results from multiple sources, a “standardized” approach is specified to perform this measurement.

2. Applicable documents.

2.1 General. The documents listed in this section are specified in sections 3, 4, and 5 of this standard practice. This section does not include documents cited in other sections of this standard practice or recommended for additional information or as examples. While every effort has been made to ensure the completeness of this list, document users are cautioned that they must meet all specified requirements of documents cited in sections 3, 4, and 5 of this standard practice, whether or not they are listed.

2.2 Non-Government publications. The following documents form a part of this document to the extent specified herein. Unless otherwise specified, the issues of these documents are those cited in the solicitation or contract.

TELECOMMUNICATIONS INDUSTRY ASSOCIATION

| | | |
|---|---|---|
| TIA-455-20 | - | Measurement Methods and Test Procedures-Monitoring of Changes in Optical Transmittance (IEC-60793-1-46 Optical Fibers Part 1-46). |
| TIA-455-15 | - | Altitude/Immersion of Fiber Optic Components. |

(Copies are available online at www.tiaonline.org or from Telecommunications Industry Association (TIA), 2500 Wilson Boulevard, Suite 300, Arlington VA 22201.)

2.3 Order of precedence. Unless otherwise noted herein or in the contract, in the event of a conflict between the text of this document and the references cited herein, the text of this document takes precedence. Nothing in this document, however, supersedes applicable laws and regulations unless a specific exemption has been obtained.

3. Definitions.

3.1 Altitude test. A test performed to determine the integrity of a DUT sealing surfaces/devices and operational capability when simulating rapid descents from a high altitude.

4. Test setup.

4.1 DUT submergence. The DUT shall be submerged in a tank of distilled water within the chamber as specified in TIA-455-15.

4.1.1 Submergence depth. DUT shall be completely submerged. The uppermost point on the DUT shall have a maximum submergence depth of 30 mm (1.2 inch).

4.1.2 Water quality. Distilled water shall not contain material preventing wetting on DUT exposed surfaces, additives, or contaminants.



Source: https://assist.dla.mil -- Downloaded: 2016-12-31T21:01Z
Check the source to verify that this is the current version before use.

4.2 DUT cabling connections. DUT cabling connections that interface with the ports on optical measurement instrumentation shall not be submerged and shall be either routed outside the chamber or to an optical interface port (at a plugged port hole in the chamber wall) so that during test optical measurements can be obtained. The change in optical transmittance shall be measured during and after the test.

4.3 Test fixture and other non DUT masses inside the chamber.

4.3.1 Test fixture. If used, test fixture must be of minimum mass and approved by the Government technical authority.

4.3.2 Non DUT masses. No other mass (item that causes significant thermal lag) shall be added inside the chamber.

4.4 Vacuum equipment and measurement.

4.4.1 Equipment. Equipment shall be capable of reducing the pressure to 25.0 +0.0/-5.0 mm of mercury (1.0 +0.0/-0.2 inch of Hg)) within a maximum duration of 5 minutes. The equipment shall be capable of maintaining this reduced pressure of 25.0 mm of Hg (1.0 inch of Hg) or 3.39 kPa for a minimum of 30 minutes within a tolerance of ±5 percent (such as ±0.1 kPa or ±.03 inch of Hg). A pressure of 25 mm (1.0 in) of Hg converts to a pressure of 3.39 kPa and is equivalent to the pressure found at 75,000 feet.

4.4.2 Measurement. Instrumentation shall be capable of measuring the reduced pressure to within a tolerance of ±5 percent (± 0.1 kPa or ±.03 inch of Hg).

5. Test procedure.

5.1 Test method. DUT assemblies (test samples) shall be tested in accordance with TIA-455-15 for altitude using the stated number of cycles with the ramp/soak times.

5.2 Test synopsis.

a. Perform pre-test visual exam for any damage.

b. Place DUT assemblies in the tank of distilled water inside the chamber as specified in 4.1. The DUT assemblies may be mounted in a test fixture, if required to secure the DUT assemblies in place.

c. Perform setup and allow DUT assemblies to relax and test equipment to stabilize for 24 hours at 25°C.

d. Record pre-test optical transmittance of DUT assemblies at 25°C.

e. Unless otherwise specified in the component military specification, perform test as follows: DUT shall be tested in accordance with TIA-455-15. Perform 3 cycle altitude immersion test as specified in 5.2e(1) through 5.2e(10).

(1) Ramp to reduced pressure. Reduce pressure in the chamber to 25.0 +0.0/-5.0 mm of mercury (1.0 +0.0/-0.2 inch of Hg) within a maximum duration of 5 minutes.

(2) Soak time at reduced pressure (simulated high altitude). Maintain this reduced pressure of 25.0 mm of Hg (1.0 inch of Hg) or 3.39 kPa for a minimum of 30 minutes within a tolerance of ±5 percent (±0.1 kPa or ±.03 inch of Hg).

(3) Ramp to room atmospheric pressure. Increase pressure in the chamber to the room ambient pressure within a maximum duration of 1 minute.



Source: https://assist.dla.mil -- Downloaded: 2016-12-31T21:01Z
Check the source to verify that this is the current version before use.

(4) Soak time at room atmospheric pressure (low altitude). Maintain this room ambient pressure for a minimum of 30 minutes.

(5) Repeat cycle. Repeat the cycle specified in 5.2e(1) through 5.2e(4) two additional times for a total of three cycles.

(6) Perform an optical transmittance measurement after completion of the third cycle.

(7) Remove the DUT assemblies from the distilled water tank and pat or wipe DUT assemblies with a suitable towel.

(8) Allow DUT assemblies to relax and test equipment to stabilize for 24 hours after the test at 25°C and room ambient pressure.

(9) Measure and record optical transmittance of DUT assemblies at 25°C.

(10) Perform posttest visual exam (see 5.4).

5.3 Optical measurements.

5.3.1 Change in optical transmittance The change in optical transmittance shall be measured during and after the test (from a baseline obtained before each test) in accordance with TIA-455-20 for transmitted power adhering strictly to the setup and test procedure specified in MIL-STD-1678-2 measurement 2102. During each test cycle, optical transmittance measurements shall be made at each ramp and during the plateau. The requirements for change in optical transmittance shall be met during and after the test.

5.3.2 Optical instrumentation capacity. This optical monitoring assumes that an optical measurement system is available with a sufficient channel measurement capability and that only one optical source exists that requires only one monitoring channel (to monitor and compensate for optical source drift).

5.4 Posttest visual examination. Inspection of the DUT shall reveal no leakage or other apparent loss of sealing capability, no deposits on ferrule, no surface or identification marking impairment, nor any damage detrimental to the operation of the DUT.

5.5 End face geometry. When DUTs are comprised of connectors or termini, the ferrule end face of each connector/termini mated pair shall be inspected for end face geometry. Inspection for end face geometry shall be performed before the test sequence and after the conclusion of the test sequence. Ferrule end face geometry shall be inspected as specified in MIL-STD-1678-5 measurement 5201.

5.6 Contamination. When DUTs are comprised of connectors or termini, the ferrule end face of each connector/termini mated pair shall be inspected for cleanliness after the completion of the test or during specified points during and after the completion of the test, as specified. Inspection shall be performed using a Fiber Optic Video Inspection System (FOVIS). As an option, each end face shall be captured using software provided with the FOVIS. For each cleaning operation performed, a table is requested to summarize the number of cleaning steps, cleaning device, cycle used, and result.



Source: https://assist.dla.mil -- Downloaded: 2016-12-31T21:01Z
Check the source to verify that this is the current version before use.

5.7 Data sheet. In addition to the items for the standard data sheet listed in MIL-STD-1678-2 Measurement 2201, the data sheet is to list the items in 5.7a through 5.7c.

a. Specify chamber room ambient to reduced pressure ramp rate.

b. Specify chamber reduced pressure to room ambient ramp rate.

c. Specify chamber limit for reduced pressure.

6. Notes.

6.1 Intended use, qualification testing. Stresses are applied to show compliance with specification requirements.



Source: https://assist.dla.mil -- Downloaded: 2016-12-31T21:01Z
Check the source to verify that this is the current version before use.

APPENDIX A

MINIMUM ESSENTIAL CHECKLIST FOR ALTITUDE IMMERSION MEASUREMENTS

A.1 Purpose. This appendix addresses a checklist of the minimum essentials for the altitude immersion measurement.

A.2 Usage. Table 3305A-I is the checklist of minimum essentials for Government auditors, or their representatives, to use during inspections. This checklist should be expanded at the auditor's discretion.

TABLE 3005A-I. Minimum essential checklist for altitude immersion measurements.

| Item | Category | Item | Requirement | Compliance |
|---|---|---|---|---|
| 1 | Test sample configuration | Cable assembly length: connectors and splices | 10 meters minimum (13 m if 3 cut-backs) | |
| | | | Complies with part 4 of this standard practice | |
| 2 | Room ambient environmental condition | Standard ambient (if test equipment built to operate in this range, if not-then controlled ambient) | 23°C ±5°C/73°F ±9°F and 20% to 70% RH | |
| | | Controlled ambient | 23°C ±2°C/73°F ±4°F and 45% to 55% RH | |
| 3 | Test condition | Test setup cable routing | Bend diameters ≥ min long term bend diameter | |
| | | | Sharp twists and bends avoided | |
| | | | Avoid protrusions/other obstacles | |
| 4 | Environmental Chamber charts | Altitude profiles recorded | Chart, stored data on disk, other approved means | |
| | | | Includes chamber model and serial, date of test | |
| | Test equipment | | | |
| 5 | Environmental chamber | Ramp to reduced pressure rate of change | Within a maximum of 5 minutes reducing the pressure to 25.0 +0.0/ -5.0 mm of mercury (1.0 +0.0/-0.2 inch of Hg) | |
| | | Ramp to room ambient pressure rate of change | Within a maximum of 1 minute | |
| | | Soak at reduced pressure | 25.0 mm of Hg (1.0 in of Hg) or 3.39 kPa for a minimum of 30 minutes within a tolerance of ± 5 percent (±0.1 kPa or ±.03 inch of Hg) | |
| | | Soak at room ambient pressure | Minimum of 30 minutes | |
| | | If programmable to perform cycles | 3 cycles at 66 minutes/cycle | |
| 6 | Optical measurements | Change in optical transmittance | Compliance with MIL-STD-1678-2 measurement 2101 | |



Source: https://assist.dla.mil -- Downloaded: 2016-12-31T21:01Z
Check the source to verify that this is the current version before use.

TABLE 3005A-I. Minimum essential checklist for altitude immersion measurements - Continued.

| Item | Category | Item | Requirement | Compliance |
|---|---|---|---|---|
| 7 | Pressure measurements | Reduced pressure or vacuum | Measure the reduced pressure to within a tolerance of ± 5 percent (±0.1 kPa or ±.03 inch of Hg) | |
| 8 | Examinations | Visual inspection | No leakage, loss of sealing capacity, deposits on ferrule, damage detrimental to operation, | |
| | | Ferrule end face contamination | FOVIS inspected and cleaned. Table provided summarizing cleaning steps, cleaning device, cycle used, and result. | |
| | | Ferrule end face geometry | Compliance with MIL-STD-1678-5 measurement 5201 | |
| 9 | Test setup | Optical fiber connections | Routed outside chamber or to an optical interface port at chamber wall | |
| | | Test fixture, if used | Minimize mass | |
| | | | Approved by Government tech authority | |
| | | | No other mass inside chamber | |
| | | Items to minimize variation in test | Secure/tie down cables (no move at instr. ports) | |
| 10 | Test | Test processes | Compliance with MIL-STD-1678-5 measurement 5101 | |
| | | Maintain setup during test (source end) | No disconnection allowed until after testing completed (see MIL-STD-1678-2 measurement 2101) | |
| | | Altitude cycle | Graph or electronic means to verify specified cycles are obtained | |
| | | Alteration in altitude cycle limites, if altered | Same ramp rates occur | |
| | | | Same altitude soak times maintained | |
| 11 | Calculation | Electronically calculated | Verify proper equation in program | |
| | | Operator performed calculations | Verify correct method used and calculated properly | |
| 12 | Data sheet | Approved data sheet | Compliance with MIL-STD-1678-2 measurement 2201 | |
| | | Added data sheet requirement | Chamber altitude to atmosphere ramp rate | |
| | | | Chamber atmosphere to altitude ramp rate | |
| | | | Chamber limit for reduced pressure | |
| | | Pressure (altitude) instrumentation | Equipment information and calibration data | |
| 13 | Pass/fail criteria | Proper criteria specified | Conforms with SPEC/contract parameters and values | |
| | | Proper criteria implemented | Test operators knows if fail and to verify result | |



Source: https://assist.dla.mil -- Downloaded: 2016-12-31T21:01Z
Check the source to verify that this is the current version before use.

A.3 Notes.

A.3.1 Intended use.

A.3.1.1 Audit team. This checklist is intended to assist Government auditors or their representatives during inspections of the optical measurement system. This checklist may be augmented at the auditor's discretion; however, it is not to be reduced.

A.3.1.2 Test laboratories. When test laboratories prepare to perform altitude immersion or audits, this checklist should be used to supplement measurement 3305, not replace it.



Source: https://assist.dla.mil -- Downloaded: 2016-12-31T21:01Z
Check the source to verify that this is the current version before use.

MEASUREMENT 3306

WEATHERING

1. Purpose. This measurement is intended to provide further direction and consistency for weathering in accordance with ASTM D2565. To ensure that the risk to the Government of accepting bad measurement data is low, to minimize test variations and to permit more accurate comparison of test results from multiple sources, a "standardized" approach is specified to perform this measurement.

2. Applicable documents.

2.1 General. The documents listed in this section are specified in sections 3, 4, and 5 of this standard practice. This section does not include documents cited in other sections of this standard practice or recommended for additional information or as examples. While every effort has been made to ensure the completeness of this list, document users are cautioned that they must meet all specified requirements of documents cited in sections 3, 4, and 5 of this standard practice, whether or not they are listed.

2.2 Non-Government publications. The following documents form a part of this document to the extent specified herein. Unless otherwise specified, the issues of these documents are those cited in the solicitation or contract.

ASTM INTERNATIONAL

| | | |
|---|---|---|
| ASTM D2565 | - | Standard Practice for Xenon-Arc Exposure of Plastics Intended for Outdoor Applications. |
| ASTM G151 | - | Standard Practice for Exposing Nonmetallic Materials in Accelerated Test Devices That Use Laboratory Light Sources. |

(Copies of these documents are available online at http://www.astm.org or from ASTM International, 100 Barr Harbor Drive, P. O. Box C700, West Conshohocken, PA 19428-2959.)

2.3 Order of precedence. Unless otherwise noted herein or in the contract, in the event of a conflict between the text of this document and the references cited herein, the text of this document takes precedence. Nothing in this document, however, supersedes applicable laws and regulations unless a specific exemption has been obtained.

3. Definitions.

3.1 Weathering. Measurement that replicates exposure to climatic conditions of daylight, moisture, and heat. This measurement does not simulate DUT deterioration caused by other environmental conditions such as salt air, pollution, or combustion products (such as sulfur dioxide – $SO_2$) or sudden changes in atmospheric pressure.

4. Setup. Measurement 3306 will be conducted in accordance with the setup specified in ASTM D2565 with the restrictions specified in 4.1 through 4.5.

4.1 Test sample parameters.

4.1.1 Configuration. DUT assembly configuration shall be in accordance with the fiber optic component military specification.

4.1.2 Coil of cable. When DUT consists of a coil of cable, then DUT assembly (test samples) shall consist of both the coil of cable and dumbbell shapes of extruded cable jacket material.



Source: https://assist.dla.mil -- Downloaded: 2016-12-31T21:01Z
Check the source to verify that this is the current version before use.

4.1.3 Protective coatings. When DUT consists of panels with various protective coatings, final DUT assembly configuration in addition to coupons (panels) must be tested if performed for qualification versus developmental testing.

4.2 Test fixture provisions. Placement of DUT assemblies in chamber consisting of a coil of cable shall be as performed in 4.2.1 and 4.2.2.

4.2.1 No overlap. Fixture shall contain provisions to ensure that the cable lengths (coils) do not overlap in the chamber.

4.2.2 Exposure placement. Fixture shall be designed so that the cable length and material samples are placed to receive exposure equivalent to that of paint coupons for both the arc lamp and water spray.

4.3 Pre-test visual inspection. Perform a pre-test visual inspection. Check for surface corrosion effects; for any cracks, scratches or other degradation in the exterior material (or protective coating as applicable); and for any other type damage. Observations recorded shall include any corrosive effects, any degradation in the protective coating seen on the external parts, and any damage which would be detrimental to the operation of the DUT assembly

4.4 Test instrumentation. Test instrumentation shall be used to measure irradiance in the chamber. Verify test instrumentation complies with 4.4.1 and 4.4.2.

4.4.1 Temperature. Thermometer or temperature measuring system shall be calibrated and be accurate to ±0.5°C (±1°F).

4.4.2 Irradiance. Irradiance measuring system calibration information and accuracy.

4.5 Test chamber parameters.

4.5.1 Temperature control. Chamber shall be capable of controlling the interior test area to within ±2°C (±3°F).

4.5.2 Water purity. The purity of the water shall be sufficient that no spots or stains are caused by positively or negatively charges ions, organics, silica or other impurities in the water.

5. Test procedure. Measurement 3306 shall be conducted in accordance with the processes specified in ASTM D2565 and conditions per table 3306-I, with the restrictions specified in 5.1 through 5.3.

TABLE 3306-I. Conditions for weathering tests.

| Conditions | |
|---|---|
| Xenon arc lamp<br>Borosilicate glass filters irradiance | 6,000 Watts<br>0.35 Watts per square meter at 340 nm |
| **Procedure** | |
| Exposure – arc lamp on | 18 hours<br>Black panel temp 63 ±2°C<br>Relative humidity 50 ±2 percent<br>(Water is sprayed onto the specimen for 18 minutes every 2 hours) |
| arc lamp off | 6 hours<br>Temperature 25 ±2°C<br>Relative humidity 90 to 95 percent |
| Total exposure | 1,200 hours |



Source: https://assist.dla.mil -- Downloaded: 2016-12-31T21:01Z
Check the source to verify that this is the current version before use.

5.1 Summary. Measurement shall be performed as follows:

a. Perform the test for a 1,200 hour exposure.

b. Perform a posttest visual inspection after test is completed.

5.2 Posttest visual inspection. Once cleaned and dried, the DUT assemblies shall be examined under three-power magnification. Inspect for both characteristics listed in 5.2.1 and 5.2.2.

5.2.1 Interior penetration. Check for water penetration into the DUT assembly interior; especially pass any openings, gaskets or seals, and threaded connections.

5.2.2 Material damage effects. Check for surface damage or protective coating degradation and for damage to external parts. Observations recorded shall include any damage seen on the external parts which would be detrimental to the operation of the DUT assembly (including mechanical mating).

5.2.3 Cable jacket criteria. Check for softening, gumminess, or surface damage (cracking, splitting, or other defects to permit jacket penetration).

5.2.4 Cable jacket extruded material. Perform a jacket tensile strength and elongation after completion of the weathering test.

5.3 Data sheet. In addition to the items for the standard data sheet listed in MIL-STD-1678-2 method 2201, the data sheet is to list the items in 5a through 5f.

a. Type of light source used to simulate sunlight.

b. Type and age of filters at the beginning of the test.

c. Changes, if any, of filters after the test.

d. Irradiance recorded throughout the test.

e. Conformance verification of water purity to ASTM G151 or other standard for water purity.

f. Parameters used if not a standard model commercial chamber or not standard for that standard model chamber.

(1) Type of black panel with operating temperature.

(2) Type of spray nozzle.

(3) Method of achieving relative humidity.

6. Notes.

6.1 Intents behind standardization efforts.

6.1.1 Multiple party testing considerations. The incentive to minimize test variables, resulting in a level playing field for multiple parties testing, leads the Government to establish a baseline. This baseline includes considerations for fabrication of test samples, methods to employ launch conditions and use of specific test practices in addition to specifics for test sample configurations.



Source: https://assist.dla.mil -- Downloaded: 2016-12-31T21:01Z
Check the source to verify that this is the current version before use.

6.2 Power level versus irradiance.

6.2.1 Background. MIL-PRF-85045 test method for weathering contains table XVI that specifies the testing parameters. Two of these parameters are (1) the lamp type and power level (2) and the irradiance to be produced. Testing is to be done using a Xenon arc lamp set at a power level of 6,000 Watts. The irradiance to be produced is $0.35 W/m^2 \pm 0.02 W/m^2$ at 340 nm.

6.2.2 Xenon arc lamp wattage versus irradiance. The irradiance is the test parameter of interest. For chambers with the capability to monitor and regulate the irradiance at a constant value directly, the wattage of the Xenon arc lamp does not need to be set or regulated. For chambers that lack this regulating capability, the Xenon arc lamp power setting is to be used as the means to regulate the irradiance. For these latter type chambers, records will be maintained of the Xenon arc lamp usage and power levels increased accordingly to compensate for aging of the Xenon arc lamp components.

6.2.3 Technical note for arc lamp wattage. This note is applicable for one vendor's weathering chambers using a Xenon arc lamp with daylight filters and set to maintain a radiance of $0.35 W/m^2$ at the 340 nm wavelength. A Xenon arc lamp with either a 6000 Watt lamp will run around 5,000 watts initially. Likewise, using a Xenon arc lamp with a 12,000 watt (12 kW or 12 kilowatt) Xenon arc lamp will consume roughly the same wattage initially. A difference in power level will be seen as the two Xenon arc lamps age. A 12,000 Watt, Xenon arc lamp will most likely maintain a power level of about 5,000 watts over 8000 hours. The wattage in a 6,000 watt, Xenon arc lamp will increase and most likely reach its maximum power level over this same duration.



Source: https://assist.dla.mil -- Downloaded: 2016-12-31T21:01Z
Check the source to verify that this is the current version before use.

MEASUREMENT 3307

FREEZING WATER IMMERSION

1. Purpose. This measurement is intended to provide further direction and consistency for freezing water immersion in accordance with TIA/EIA-455-98. To ensure that the risk to the Government of accepting bad measurement data is low, to minimize test variations and to permit more accurate comparison of test results from multiple sources, a “standardized” approach is specified to perform this measurement.

2. Applicable documents.

2.1 General. The documents listed in this section are specified in sections 3, 4, and 5 of this standard practice. This section does not include documents cited in other sections of this standard practice or recommended for additional information or as examples. While every effort has been made to ensure the completeness of this list, document users are cautioned that they must meet all specified requirements of documents cited in sections 3, 4, and 5 of this standard practice, whether or not they are listed.

2.2 Non-Government publications. The following documents form a part of this document to the extent specified herein. Unless otherwise specified, the issues of these documents are those cited in the solicitation or contract.

NCSL INTERNATIONAL

NCSL-Z540.3 - Calibration of Measuring and Test Equipment, Requirements for

(Copies of these documents are available online at http://www.ncsli.org or from NCSL International 2995 Wilderness Place, Suite 107 Boulder, Colorado 80301-5404.)

TELECOMMUNICATIONS INDUSTRY ASSOCIATION

TIA/EIA-455-98 - Fiber Optic Cable External Freezing Test.

(Copies are available online at www.tiaonline.org or from Telecommunications Industry Association (TIA), 2500 Wilson Boulevard, Suite 300, Arlington VA 22201.)

2.3 Order of precedence. Unless otherwise noted herein or in the contract, in the event of a conflict between the text of this document and the references cited herein, the text of this document takes precedence. Nothing in this document, however, supersedes applicable laws and regulations unless a specific exemption has been obtained.

3. Definitions.

3.1 Freezing water immersion. Measurement that replicates exposure to climatic conditions of a DUT assembly in a puddle or immersed in water that freezes. The method performed for this measurement does not simulate DUT deterioration caused by the crushing effect of water freezing to ice.

4. Setup. Measurement 3307 shall be conducted in accordance with the setup specified in TIA/EIA-455-98 with the restrictions specified in 4.1 through 4.5.

4.1 Test sample parameters.

4.1.1 Configuration. DUT assembly configuration, including cable length, shall be in accordance with the fiber optic component military specification. When the DUT being tested is the cable and no length is specified for this test, then method A of TIA/EIA-455-98 shall apply.

4.1.2 Water vessel size versus size of DUT assemblies. The size of the water vessel shall be such that, when mated connectors or a coil of cable are placed in the vessel, the mated connectors or coiled cable shall be within 150 mm (5.9 inch) of the sides and bottom of the water vessel, and within 150 mm (5.9 inch) of the surface of the water.



Source: https://assist.dla.mil -- Downloaded: 2016-12-31T21:01Z
Check the source to verify that this is the current version before use.

4.2 Placement of DUT assemblies in chamber.

4.2.1 Position of DUT assemblies (see 4.1.2). Keep the DUT assembly evenly spaced, top-to-bottom and on both sides. This spacing avoids a differential pressure from the ice.

4.2.2 Position relative to vessel sides. Place each DUT assembly in a separate vessel so that it is within 150 mm (5.9 in) of sides, water line, and bottom.

a. Keep evenly spaced, top-to-bottom and on both sides, so as not to obtain a differential pressure from the ice.

b. Ensure that DUT assemblies are secured in-place so that there will be no gross movement during freezing.

c. Preference is to use a separate water vessel for each DUT assembly tested. When multiple DUT assemblies are in same water vessel, do not allow them to touch (such as use of a fixture to maintain a fixed separation).

4.2.3 Avoidance of “crushing” effect.

4.2.3.1 Allowance for ice expansion. Select water vessel that has ample area for ice expansion from water.

4.2.3.2 Position from sides. Keep within 150 mm (5.9 in) of the wall to minimize any higher pressure from the ice.

4.2.3.3 Cabling considerations. Axial direction (front and back or direction along length of the optical fiber) can be sufficiently long to allow cables to protrude from top of vessel without contacting sides of the water vessel. (Center DUT in vessel in the axial direction).

4.3 Pre-test visual inspection. Perform a pre-test visual inspection. Check for surface corrosion effects; for any cracks, scratches, or other degradation in the exterior material (or protective coating as applicable); and for any other type damage. Observations recorded shall include any corrosive effects, any degradation in the protective coating seen on the external parts, and any damage which would be detrimental to the operation of the DUT assembly.

4.4 Test instrumentation. Test instrumentation shall be used to measure water/ice temperature in the water vessel. Verify test instrumentation to measure water/ice temperature in the water vessel complies with 4.4.1 and 4.4.2.

4.4.1 Accuracy. Thermometer or temperature measuring system shall be calibrated and be accurate to ±0.5°C (±1°F).

4.4.2 Placement. Place thermometer vertically to measure water/ice temperature at half the height of the vessel water level. Place thermometer horizontally to measure water/ice temperature at the center among the four walls or circumference of the water vessel.

4.5 Test chamber parameters.

4.5.1 Size of interior test area. Chamber shall be of sufficient size to accommodate the size of the water vessel (see 4.2.1).

4.5.2 Cooling rate capacity. Chamber shall have sufficient cooling rate capacity to freeze contents of water vessel at the specified low temperature limit within a reasonable period of time.

4.5.3 Temperature control. Chamber shall be capable of controlling the interior test area to within ±2°C (±3°F).



Source: https://assist.dla.mil -- Downloaded: 2016-12-31T21:01Z
Check the source to verify that this is the current version before use.

5. Test procedure. Measurement 3307 shall be conducted in accordance with the processes specified in procedure 1 of TIA/EIA-455-98 with method A, as applicable and with the restrictions specified in 5.1 through 5.3.

5.1 Summary.

a. After setup is completed, allow DUT assemblies to relax and test equipment to stabilize for 24 hours at 25°C.

b. Record pre-test optical transmittance of DUT assemblies at 25°C.

c. Perform test to TIA/EIA-455-98, procedure 1 as follows:

| Step | Action | Temperature | Duration |
|---|---|---|---|
| 1 | Soak at | Ambient (25°C) | 24 hours |
| 2 | Ramp to | -10°C | |
| 3 | Soak at | -10°C | 1/ |
| 4 | Ramp to | -2°C | |
| 5 | Soak at | -2°C | 2/, 5/ |
| 6 | Ramp to | Ambient (25°C) | 3/ |
| 7 | Soak at | Ambient (25°C) | 4/ |

1/ Remain at soak temperature until water is completely frozen. Water shall be defined as completely frozen when water temperature reading is -1°C or -2°C.
2/ Remain at soak temperature until 1 hour after optical power is stable.
3/ Ambient temperature is obtained when ice melts and temperature sensor immersed into the water vessel measures a temperature of 25°C.
4/ Remain at soak temperature until 24 hours after optical power is stable.
5/ Record during test optical transmittance measurement 1 hour after temperature has stabilized.

d. After setup is completed, allow DUT assemblies to relax and test equipment to stabilize for 24 hours at 25°C.

e. Record posttest optical transmittance of DUT assemblies at 25°C.

f. Perform a posttest visual inspection.

5.2 Posttest visual inspection. Once cleaned and dried, the DUT assemblies shall be examined under three-power magnification. Inspect for both characteristics listed in 5.2.1 and 5.2.2.

5.2.1 Interior penetration. Check for water penetration into the DUT assembly interior; especially pass any openings, gaskets or seals, and threaded connections.

5.2.2 Material damage effects. Check for surface damage or protective coating degradation and for damage to external parts. Observations recorded shall include any damage seen on the external parts which would be detrimental to the operation of the DUT assembly (including mechanical mating).



Source: https://assist.dla.mil -- Downloaded: 2016-12-31T21:01Z
Check the source to verify that this is the current version before use.

5.3 Data sheet. In addition to the items for the standard data sheet listed in MIL-STD-1678-2 Measurement 2201, the data sheet is to list the items in 5.3.1 through 5.3.4.

5.3.1 Test duration. Specify the exposure times (ramps and soak periods) at each temperature. Specify any interruption. For any interruption, include its cause and duration.

5.3.2 Visual inspections. Specify in a table the parameters and findings for the pre-test and the posttest visual inspections.

5.3.3 Test fixtures. Provide details and sketches/figures of any test fixtures used.

5.3.4 Water tank. Provide dimensions and sketch/figure of water vessel used.

6. Notes.

6.1 Intents behind standardization efforts.

6.1.1 Multiple party testing considerations. The incentive to minimize test variables, resulting in a level playing field for multiple parties testing, leads the Government to establish a baseline. This baseline includes considerations for fabrication of test samples, methods to employ launch conditions and use of specific test practices in addition to specifics for test sample configurations.



Source: https://assist.dla.mil -- Downloaded: 2016-12-31T21:01Z
Check the source to verify that this is the current version before use.

MEASUREMENT 3308.1

ELECTROMAGNETIC EFFECTS

1. Purpose. This measurement is intended to ensure that the addition of fiber optic components (such as cables or connectors) and related fittings (connectorized or feed through) maintain the shielding effectiveness of the pre-existing structure or enclosure at a value that is greater than the minimum specified value. This test is performed to determine the propagation characteristics (either towards attenuation or towards conduction) of the cable through a waveguide or of a connector. In general, look at the test results for a relative increase in the signal strength. This increase relates to a decrease in the shielding effectiveness of the component under test. To ensure that the risk to the Government of accepting bad measurement data is low, to minimize test variations and to permit more accurate comparison of test results from multiple sources, a “standardized” approach is specified to perform this measurement.

2. Applicable documents.

2.1 General. The documents listed in this section are specified in sections 3, 4, and 5 of this standard practice. This section does not include documents cited in other sections of this standard practice or recommended for additional information or as examples. While every effort has been made to ensure the completeness of this list, document users are cautioned that they must meet all specified requirements of documents cited in sections 3, 4, and 5 of this standard practice, whether or not they are listed.

2.2 Non-Government publications. The following documents form a part of this document to the extent specified herein. Unless otherwise specified, the issues of these documents are those cited in the solicitation or contract.

INSTITUTE OF ELECTRICAL AND ELECTRONIC ENGINEERS

IEEE-STD-299 - Standard Method for Measuring the Effectiveness of Electromagnetic Shielding Enclosures.

(Copies of this document are available online at http://www.ieee.org or from the Institute of Electrical and Electronic Engineers (IEEE), 2001 L. Street, NW. Suite 700, Washington, D.C. 20036-4910.)

2.3 Order of precedence. Unless otherwise noted herein or in the contract, in the event of a conflict between the text of this document and the references cited herein, the text of this document takes precedence. Nothing in this document, however, supersedes applicable laws and regulations unless a specific exemption has been obtained.

3. Definitions.

3.1 Electromagnetic field. A field characterized by both electric and magnetic field vectors that interact with one another rather than exist independently of each other, as in electrostatic, static magnetic, and electromagnetostatic fields. The electromagnetic field varies with time at a point and propagates as a wave from its source, whereas the others, although they may be made to vary, do not exist very far from their sources and decay rapidly with distance.



Source: https://assist.dla.mil -- Downloaded: 2016-12-31T21:01Z
Check the source to verify that this is the current version before use.

3.2 Electromagnetic radiation (EMR). Radiation made up of oscillating electric and magnetic fields that propagate with the speed of light. It includes gamma radiation, x-ray, ultraviolet, visible, and infrared radiation, and radar and radio waves. The radiation is propagated with a phase velocity, v, in the propagation medium, given by the relation:

$$v = \lambda f = c/n;$$

Where;

λ (Lambda) is the wavelength in the propagation medium,
f is the frequency generated by the source,
c is the velocity of light in a vacuum (approximately 3 x 108 m/s), and
n is the refractive index of the propagation medium.

3.3 Electromagnetic spectrum. The frequencies, or wavelengths, present in given electromagnetic radiation. A particular spectrum could include a single frequency or a wide range of frequencies.

3.4 Electromagnetic wave. The effect obtained when a time-varying electric field and a time-varying magnetic field interact, causing electrical and magnetic energy to be propagated in a direction that is dependent upon the spatial relationship of the two interacting fields that are interchanging their energies as the wave propagates. The two fields define the polarization plane as well as the wave front. The cross-product of the two fields, with the electric field vector rotated into the magnetic field vector, define a vector, called the Pointing vector that indicates the direction of propagation and defines a ray, which is perpendicular to the wave front.

4. Setup. The test setups employed in evaluating the effects of the fiber optic modification to the enclosure shall consist of distinct steps or measurement phases as summarized in appendix A. Test setups for each of these distinct steps or measurement phases shall conform to 4.1 through 4.5. Examples for requirements with test frequencies that the cable and multiple termini connector must meet are tabulated in appendix B. Test equipment used shall meet the criteria specified in appendix C. The checklist in appendix D is provided to ensure compliance for inspection purposes.

4.1 Dynamic range (Instrumentation).

4.1.1 Location. Verification should be performed in a low RF ambient environment, preferably anechoic. This may occur inside the shielded enclosure, provided the signal source equipment ambient does not affect the measurement. Care should be taken to electrically isolate the power sources for transmitting and receiving equipment.

4.1.2 Positioning. Each matched pair of antennas used for the test is positioned in the plane for horizontal polarization (see figure 3308-1). The transmit and receive antennas should be placed 2 meters (6.6 feet) apart and at least 2 meters (6.6 feet) from any reflective surface.

a. Positioning detail 1. The 2 meter (6.6 foot) distance between the transmit antenna and the receive antenna is required (as shown in figure 3308-1). The only exception to maintaining this 2 meter (6.6 foot) distance is if the positioning of the receive antenna within 5 cm (2 inches) from the access panel (for the subsequent isolation and shielding effectiveness measurements) is blocked by a permanent, non-removable obstruction (which may include radiation absorbing/insulating materials). If this blockage is the case, a request for an allowance must be submitted to the qualifying activity. The additional distance, if allowed, is the one that permits the receive antenna to be the closest achievable without making contact with the obstruction. If the allowance is approved, then the distance between antennas are to be increased by the additional distance for the dynamic range measurement also. The dynamic range of the equipment must be above the signal level specified for the applicable component in 5.1.2 at this increased distance.



Source: https://assist.dla.mil -- Downloaded: 2016-12-31T21:01Z
Check the source to verify that this is the current version before use.

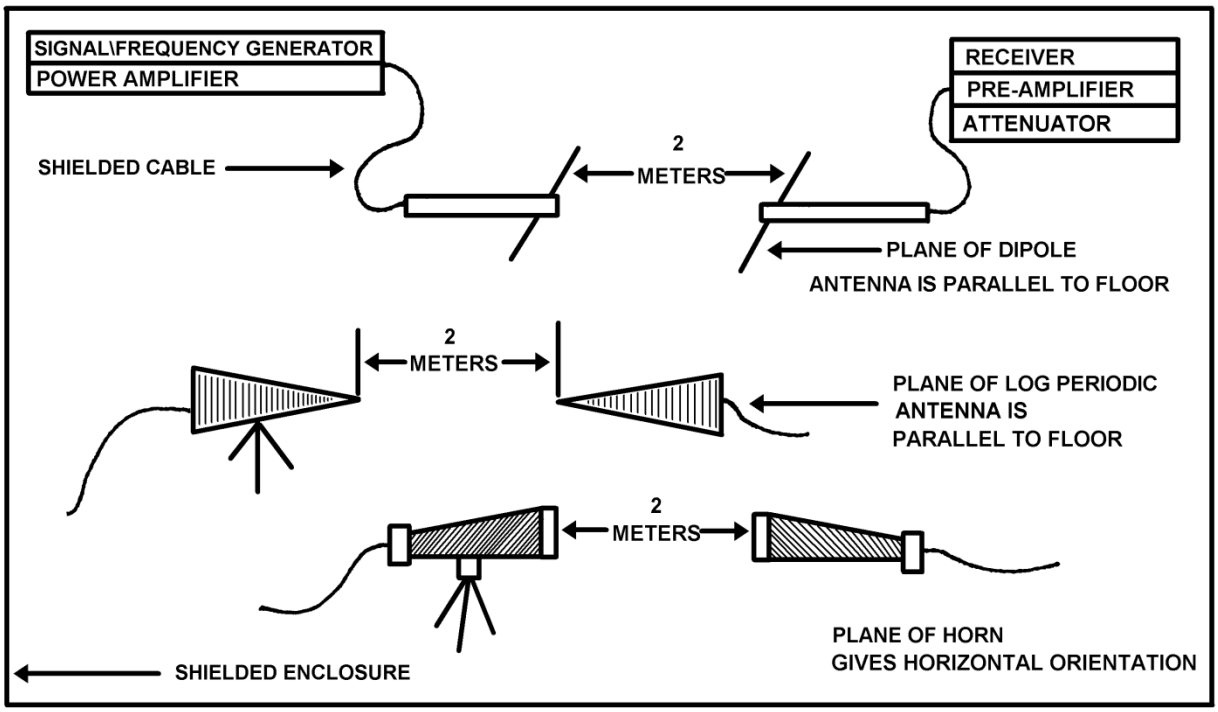


FIGURE 3308-1. Dynamic range and isolation measurements.

b. Positioning detail 2. The 2 meter (6.6 foot) distance requirement, relative to the floor as a reflecting surface, is dependent upon the type of antenna used. Log periodic and horn antennas are directional (beam like that of a flashlight) and are not of concern since the main beam radiation pattern will not illuminate the floor. The dipole antenna is multi directional with a radiation pattern that will reflect off the floor when in the horizontal position. This is of concern since an error up to 6 dB can occur. A dipole antenna must be positioned at least 2 meters (6.6 feet) from a reflective floor for this test.

4.1.3 Measures to maximize coupling. In general, three measures taken to obtain maximum energy out of the receive antenna (maximum coupling) are (1) no polarization mismatch, (2) co-planar orientation and (3) distancing for peak of the beam. For this document, antenna positioning shall ensure a co-planar orientation and no polarization mismatch (see 5.1.3). Antennas distancing is not required to be in the peak of the beam; however, the same angular alignment (shipboard "yaw" equivalent) must be maintained between the front faces of the transmit antenna and the receive antenna for all side view measurements. An attenuator may be used to reduce the radiated signal strength and avoid amplifier saturation. Radiated signal strength attenuation by deviation from the specified distance between antennas (of 2 meters (6.6 feet)) is not permitted.

4.2 Isolation measurements of the shielded enclosure (enclosure only).

4.2.1 Location. Place the transmit antenna outside the shielded enclosure 2 meters (6.6 feet) from the penetration port (location where the cable fitting/penetration will be made) and at least 2 meters (6.6 feet) from any reflective surface. The transmit antenna shall be pointed towards the shielded enclosure (pointed in the direction so that the radiated signal is propagated towards the shielded enclosure). Receiving equipment shall be located inside the shielded enclosure.



Source: https://assist.dla.mil -- Downloaded: 2016-12-31T21:01Z
Check the source to verify that this is the current version before use.

NOTE: An allowance may be made for a situation where transmitting the signal outside of an environmental chamber would interfere with the surrounding area. In this case, the transmitting equipment may be placed inside and the receiving equipment outside the shielded enclosure. If this test setup is used, the vendor assumes the risk that other stray electromagnetic interference may be measured resulting in a failure. The preferred test setup is when the transmitting equipment is outside and the receiving equipment is inside the shielded enclosure. Test performance in this document is written for using the preferred test setup.

4.2.2 Positioning. Each matched pair of antennas used for the test is positioned in the plane for horizontal polarization (see figure 3308-1). The transmit antenna is positioned so that it will be co-planar with the receive antenna during the measurement.

4.2.3 Other actions. Penetration ports in the access panel are to be capped. Power sources for instrumentation should be isolated.

4.3 Isolation measurement of the shielded enclosure with waveguide/blank mounting plate installed (enclosure with fitting). Test is performed with the transmitting equipment outside the shielded enclosure and the receiving equipment on the inside.

4.3.1 Cable test. Install the waveguide in the shielded enclosure access panel so that the waveguide protrudes inside the shielded enclosure for the wall. The waveguide shall be installed in the access panel and shall have an inside diameter to total length ratio of 1 to 72. For test purposes, a straight waveguide shall be used to simulate a worst-case condition. The waveguide shall protrude inside the shielded enclosure from the wall.

4.3.2 Connector test. Install the fitting/mounting plate for the connector receptacle onto the access panel on the shielded enclosure. The fitting/mounting plate shall be positioned so that the connector plug or dust cover mates from the outside of the shielded enclosure. Place a blank cover plate onto the fitting/mounting plate with an EMI gasket between these two items. Use appropriate hardware to secure the blank cover plate.

NOTE: The measurements for this test (see 5.3) are required for cable. The measurements for this test (see 5.3) are required for connectors only if a failure occurs with measurements once the DUT is installed (see 5.4).

4.4 Resultant shielding effectiveness of the DUT (enclosure with DUT installed in fitting). This test is performed with the transmitting equipment outside the shielded enclosure and the receiving equipment on the inside.

4.4.1 Cable test. Install the cable (with a minimum length of 6 meters (19.7 feet)) into the waveguide fitting so that 0.3 meters (11.8 inches) of the cable extends beyond the waveguide inside the shielded enclosure as shown in figure 3308-2. See table 3308-I for additional placement distance information. Verify that the cable is extended perpendicular to the enclosure wall and is suspended dielectrically at least 1 meter (3.3 feet) above the floor of the shielded enclosure on both sides of the enclosure wall. Dielectric tie-off may be used to secure to a structure. Dielectric tripods may be used to suspend the cable above the floor.



Source: https://assist.dla.mil -- Downloaded: 2016-12-31T21:01Z
Check the source to verify that this is the current version before use.

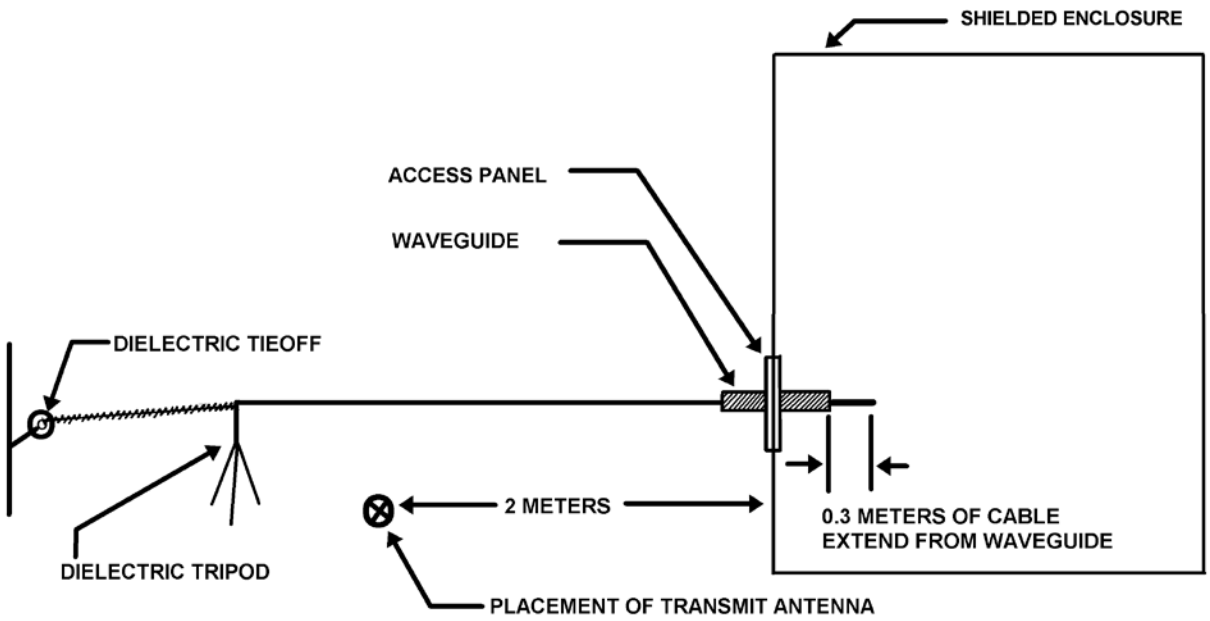


FIGURE 3308-2 Cable setup for shielding effectiveness of a DUT.

4.4.2 Connector test. Install the connector receptacle onto the outside surface of the access panel on the shielded enclosure (see figure 3308-3 or figure 3308-4, as applicable). The same EMI gasket (used in step 5.3) shall be used between the connector receptacle and the fitting/mounting plate. Test sample configurations shall consist of connector receptacles mated to connector plugs with backshells and connector receptacles mated to dust covers. Connector plugs and receptacles are to be terminated, including the cable. Mate the connector plug or the dust cover with the connector receptacle, as applicable. Verify that the connector plug or the dust cover when mated is outside the shielded enclosure (see note below for exception). The connector plug with cable or connector end cap must be with (on the same side of the access panel as) the transmit antenna. The multiple fiber cable from the connector plug shall be extended parallel to the connector longitudinal axis for the minimum distance specified (different distances for testing in the perpendicular and parallel directions). The single fiber cable from the connector receptacle shall be extended parallel (to the connector longitudinal axis) for a minimum of 2 meters (6.6 feet) on the other side of the shielded enclosure wall as shown in figure 3308-3 or figure 3308-4, as applicable. Unless otherwise specified in the approved test procedure, MIL-PRF-85045 cable shall be used. Dielectric tie-off may be used to secure to a structure. Dielectric tripods may be used to suspend the cable above the floor.



Source: https://assist.dla.mil -- Downloaded: 2016-12-31T21:01Z
Check the source to verify that this is the current version before use.

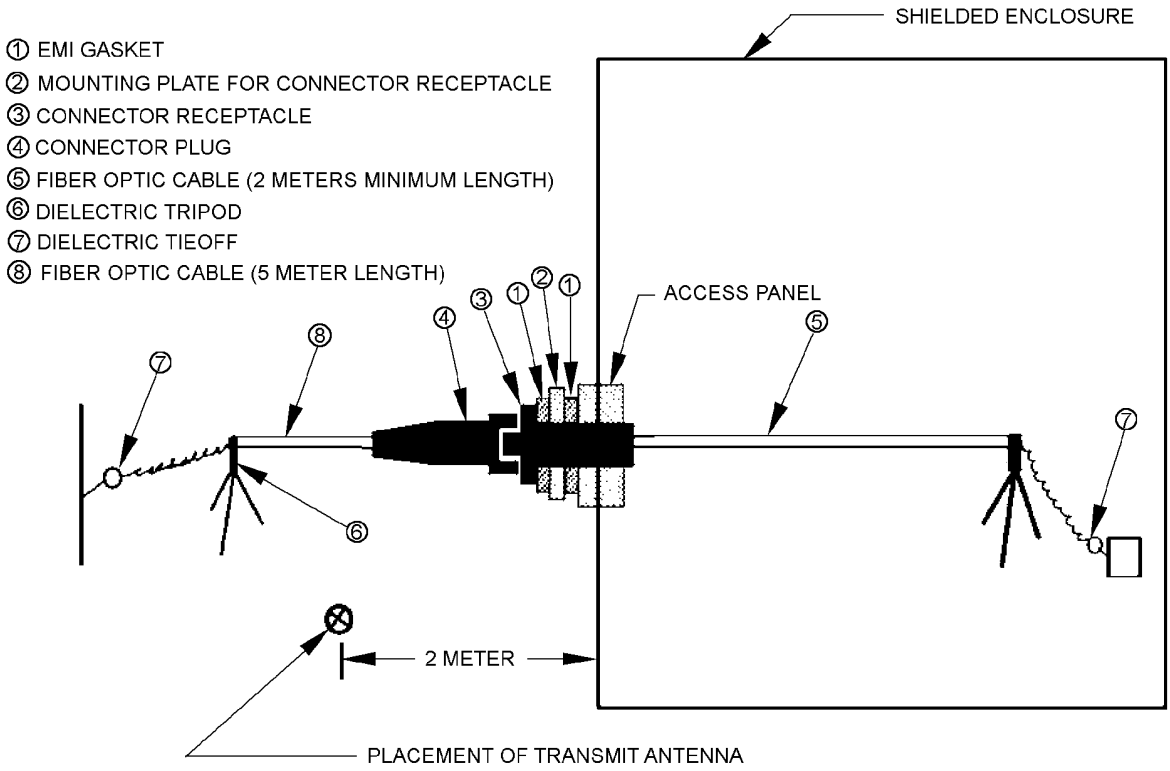


FIGURE 3308-3 Connector setup for shielding effectiveness of a DUT using parallel direction of transmit antenna.



Source: https://assist.dla.mil -- Downloaded: 2016-12-31T21:01Z
Check the source to verify that this is the current version before use.

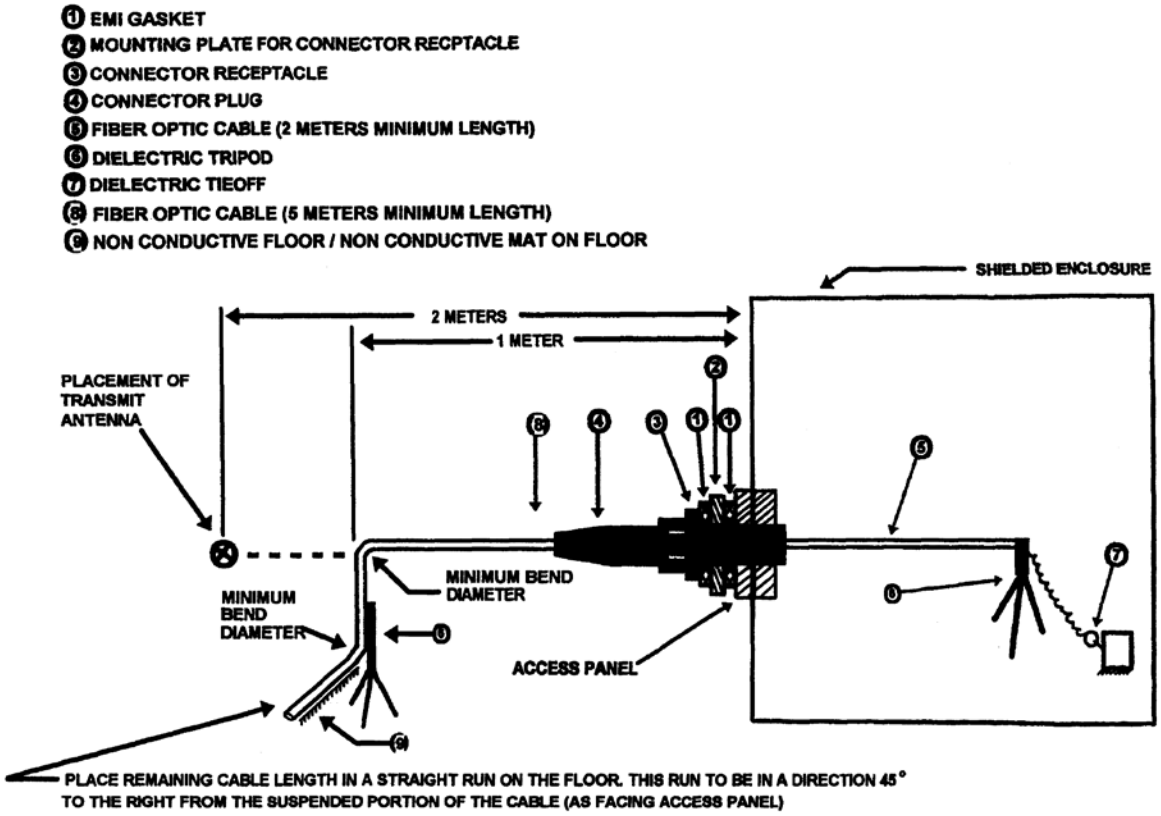


FIGURE 3308-4 Connector setup for shielding effectiveness of a DUT using perpendicular direction of transmit antenna.

NOTE: Connector installation. Connector plug with cable must be with the transmit antenna. MIL-PRF-28876 states that "the test specimen receptacle (connector receptacle) shall be mounted into the wall (panel) of the enclosure such that the plug or dust cover mates from the inside of the shielded enclosure". An allowance is made for an alternative setup for a situation where transmitting the signal outside of an environmental chamber would interfere with the surrounding area. If this test setup is used, the vendor assumes the risk that other stray electromagnetic interference may be measured resulting in a failure. The preferred test setup is when the test specimen receptacle is mounted on the access panel so that the plug or dust cover mates from the outside of the shielded enclosure. The transmit antenna is placed outside the shielded enclosure. Test performance in this document is written for using the preferred test setup. As stated previously, in either setup, the connector plug with cable must be with the transmit antenna.

a. Connector plug cable routing for testing in the parallel direction. The multiple fiber cable exiting the backshell on the connector plug shall be suspended and extended parallel (to the connector longitudinal axis) to the floor and perpendicular to the access panel for a minimum distance of 5 meters (16.4 feet) on one side of the shielded enclosure wall as shown in figure 3308-3. At the end of this distance of 5 meters (16.4 feet), the cable shall be secured dielectrically



Source: https://assist.dla.mil -- Downloaded: 2016-12-31T21:01Z
Check the source to verify that this is the current version before use.

b. Connector plug cable routing for testing in the perpendicular direction. The multiple fiber cable exiting the backshell from the connector plug shall be suspended and extended parallel (to the connector longitudinal axis) to the floor and perpendicular to the access panel for a distance of 1 meter (3.3 feet) on one side of the shielded enclosure wall as shown in figure 3308-4. At 1 meter (3.3 feet), the cable shall be placed/tied to a dielectric stand such that the cable is perpendicular to the floor. Between this transitioning from parallel to perpendicular cable directions, the cable shall be placed in a bend at the cable's minimum long-term bend diameter. Upon reaching the floor, the remaining cable length shall have a straight run in a direction 45 degrees to the right (facing access panel) from the suspended portion of the cable. Between this transition from perpendicular to parallel cable directions, the cable shall be placed in a bend at the cable's minimum long-term bend diameter.

TABLE 3308-I. Antenna placement distances.

| Location | Placement 1/ |
|---|---|
| Receiving antenna to cable | 5 cm (2 inch) |
| Transmitting antenna to cable | 1 m (3.3 feet) |
| Transmitting antenna to shielded enclosure | 2 m (.79 inch) |

1/ Extended dipole antenna distance measurements shall be made from the center of the antenna elements.

4.5 Analysis and documentation. Test setup is not applicable for this distinct step.

5. Test procedure. The test methodology employed in evaluating the effects of the fiber optic modification to the enclosure shall consist of distinct steps as summarized in appendix A. Test procedures for each of these distinct steps or measurement phases shall conform to 5.1 through 5.5. Examples for requirements with test frequencies that cabling and multiple termini connectors must meet are provided in appendix B.

5.1 Dynamic range (Instrumentation). Intent of this step is to verify that the test equipment has the functionality to perform the measurements by determining if there is sufficient dynamic range (transmit and receive gain). Measure the amplitude of the transmitted signal via the receive system without an attentuative structure in place.

5.1.1 Ambient verification measurement (transmitter-off measurement): With the transmit system off, tune the receiver to the specified test frequency using the designated antenna for that frequency. For each frequency identified in the approved test procedure, verify the local ambient levels are adequate. Maximize radiated signal strength as stated in 5.1.3. Record the measure ambient level for each frequency. Repeat for each required frequency.

NOTE: This measurement is designated as $P_1$ if a power level is measured or $E_1$ if a voltage level is measured. All measurements are made at the receive antenna.

5.1.2 Measurement of signal level induced in receive antenna (transmitter-on measurement): For each frequency used above, tune the transmitter and receiver to each specified test frequency using the designated antenna pair for that frequency. Attenuators may be used at the receiver to avoid saturation. Maximize radiated signal strength as stated in 5.1.3. Record the measured levels via the receive system and record the signal source settings (and amplifier gain settings as applicable) required to produce the resultant field.



Source: https://assist.dla.mil -- Downloaded: 2016-12-31T21:01Z
Check the source to verify that this is the current version before use.

NOTE: This measurement is designated as $P_2$ if a power level is measured or $E_2$ if a voltage level is measured. All measurements are made at the receive antenna.

a. Cable. The dynamic range of the test equipment for plane wave propagation shall be at least 6 dB above the specified signal attenuation of 100 dB for frequencies not greater than 1 GHz and at least 6 dB above the specified signal attenuation of 60 dB at 10 GHz.

b. Connector. The dynamic range of the test equipment for plane wave propagation shall be at least 20 dB above the specified signal attenuation of 60 dB and for a microwave field propagation shall be at least 15 dB above the specified signal attenuation of 60 dB.

5.1.3 Maximize signal strength.

a. Maximize co-planar orientation. Receive antenna shall be moved in a translational manner (up-and-down, side to-side) to maximize the measurement for radiated signal strength.

b. Maximize for no polarization mismatch. Once maximized for the co-planar orientation, the receive antenna shall be moved in a rotational manner (counterclockwise or clockwise) to maximize the measurement for radiated signal strength. This rotation is also referred to as the rotation between the horizontal and vertical antenna positions (between horizontal and vertical polarization).

5.1.4 Calculation of dynamic range.

a. Approach. One approach to find the dynamic range is as follows: The dynamic range is the range of amplitudes over which the receive system operates linearly and is calculated as:

$$DR_{RCVR} = P1(dB) - P2(dB).$$

Where; P1 is the largest possible input signal. This input signal measurement is taken with any internal or external attenuators to be used. P1 is taken at the 1 dB compression point (point at which output is 1 dB below input at amplifier saturation).
P2 is the input signal at the noise floor or the minimum detectable signal.

NOTE: In general, the convention for a logarithmic unit will be the logarithmic power level with transmitter off minus the logarithmic power level with transmitter on.

b. Validity of data. Ensure that the scaled readings on the receive systems are commensurate with the transmitted signal, and that no saturation or gain compression is apparent.

5.1.5 Transmit (input) signal level. The power level used during the isolation and shielding effectiveness portions of the test shall not be below the power level established for the dynamic range measurement. The same setting on the transmit equipment established during the dynamic range measurement shall be maintained for the remainder of the testing.

5.2 Isolation measurements of the shielded enclosure (Enclosure only). This test methodology is employed in verifying shielding effectiveness prior to installation of waveguides, fittings, and the fiber optic component under test (also referred to as the Device Under Test or DUT). This test shall be performed with the transmit antenna placed outside the shielded enclosure and orientated relative to the receive antenna as shown in figure 3308-1. In the parallel direction, there is parallel transmission of the radiated signal.

5.2.1 Placement of receive antenna. Place the receive antenna inside the shielded enclosure directly opposite the intended location of the fitting at a distance of 5 cm (2 inches) from the mounting plate. Orient the receive antenna, relative to the transmit antenna, as shown in figure 3308-1.



Source: https://assist.dla.mil -- Downloaded: 2016-12-31T21:01Z
Check the source to verify that this is the current version before use.

5.2.2 Travel of receive antenna during measurement. For each frequency identified in the approved test procedure and using the signal settings derived in 5.1, create and measure the resultant field inside the shielded enclosure. Maximize the signal strength as follows:

a. Maximize co-planar orientation. Receive antenna shall be moved in a translational manner (up-and-down, side to-side) to maximize the measurement for radiated signal strength.

b. Maximize for no polarization mismatch. Once maximized for the co-planar orientation, the receive antenna shall be moved in a rotational manner (counterclockwise or clockwise) to maximize the measurement for radiated signal strength.

5.2.3 Measurements to obtain (see figure 3308-1).

a. Ambient measurement (Transmit-off). With the transmit system off, verify the local ambient levels are adequate. For each frequency identified in the approved test procedure, tune the receiver to the specified test frequency using the designated antenna for that frequency. Maximize radiated signal strength as stated in 5.2.2. Record the measure ambient level for each frequency. Repeat for each required frequency.

NOTE: This measurement is designated as $P_3$ if a power level is measured or $E_3$ if a voltage level is measured. All measurements are made at the receive antenna.

b. Induced signal level measurement (Transmit-on). For each frequency used above, tune the transmitter and receiver to each specified test frequency using the designated antenna pair for that frequency. Attenuators may be used at the receiver to avoid saturation. Maximize radiated signal strength as stated in 5.2.2. Record the measured levels via the receive system and record the signal source settings (and amplifier gain settings as applicable) required to produce the resultant field.

NOTE: This measurement is designated as $P_4$ if a power level is measured or $E_4$ if a voltage level is measured. All measurements are made at the receive antenna.

5.2.4 Calculation for shielding effectiveness. The shielding effectiveness of the shielded enclosure is determined from the power or voltage levels generated by the transmit antenna (propagated external field level) and those induced in the receive antenna with the shielded enclosure in the vicinity of the access panel, respectively, without changing the relative positions of transmit and receive antennas. Depending on the measurement parameter obtained (such as voltage or power level), one of the calculation methods listed below may apply.

a. Measurement of voltage levels in linear units (Volts). The shielding effectiveness is:

$$SE_{enclosure} = 20\log(E_{Ref}/E_4),$$

Where; $E_{Ref}$ and $E_4$ are the voltages from the propagated external field level by the transmit antenna (reference reading) and the measurement obtained from the receive antenna with the shielded enclosure in the vicinity of the access panel (transmit-on), respectively, without changing the relative positions of transmit and receive antennas.

NOTE: The propagated external field level by the transmit antenna (reference reading), $P_{Ref}$, is equal to the signal generator output plus the antenna gain minus the cable loss.

b. Measurement of power levels in linear units (Watts). If the power levels rather than the voltage levels were measured, then the Shielding Effectiveness, $SE_{enclosure} = 10\log(P_{Ref}/P_4)$.

NOTE: In general, the convention for a logarithmic calculation will be the power generated by the transmit antenna (reference reading) over the power level measured with the receive antenna (transmit-on).



Source: https://assist.dla.mil -- Downloaded: 2016-12-31T21:01Z
Check the source to verify that this is the current version before use.

c. Measurement in terms of non-linear, logarithmic units (such as dB, $dB_{uV}$, $dB_{mW}$). The Shielding Effectiveness, $SE_{enclosure} = P_{Ref} - P_4$.

5.3 Isolation measurement of the shielded enclosure with waveguide/blank mounting plate installed (Enclosure with fitting). This test methodology is employed in verifying shielding effectiveness after the installation of waveguides/fittings, but prior to the installation of the DUT. For cable testing, this verifies that a waveguide at cut-off (WACO) is used. For connector testing, this verifies the effectiveness of the fitting/mounting plate and EMI gasket to prevent EMI conduction. This test shall be performed by repeating 5.2 with some exceptions. Waveguide shall be lengthened, different EMI gasket used or other steps taken, if needed, so that there is no degradation of the shielding effectiveness of the shielded enclosure. Measurements are to be obtained for the following parameters:

5.3.1 Ambient measurement (Transmit-off). With the transmit system off, verify the local ambient levels are adequate (see figure 3308-1). For each frequency identified in the approved test procedure, tune the receiver to the specified test frequency using the designated antenna for that frequency. Maximize radiated signal strength as stated in 5.1.3. Record the measured ambient level for each frequency. Repeat for each required frequency.

NOTE: This measurement is designated as $P_5$ if a power level is measured or $E_5$ if a voltage level is measured. All measurements are made at the receive antenna.

5.3.2 Induced signal level measurement (Transmit-on). For each frequency used above, tune the transmitter and receiver to each specified test frequency using the designated antenna pair for that frequency (see figure 3308-1). Attenuators may be used at the receiver to avoid saturation. Maximize radiated signal strength as stated in 5.1.3. Record the measured levels via the receive system and record the signal source settings (and amplifier gain settings as applicable) required to produce the resultant field.

NOTE: This measurement is designated as $P_6$ if a power level is measured or $E_6$ if a voltage level is measured. All measurements are made at the receive antenna.

5.3.3 Calculation for shielding effectiveness. The effectiveness of the shielded enclosure with the fitting installed is determined from the power or voltage levels generated by the transmit antenna (propagated external field level) and those induced in the receive antenna with the shielded enclosure in the vicinity of the access panel, respectively, without changing the relative positions of transmit and receive antennas. Depending on the measurement parameter obtained (such as voltage or power level), one of the calculation methods listed below may apply.

a. Measurement of voltage levels in linear units (Volts). The shielding effectiveness is:

$$SE_{enclosure\ with\ fitting} = 20\log(E_{Ref}/E_6)$$

Where; $E_{Ref}$ and $E_6$ are the voltages from the propagated external field level by the transmit antenna (reference reading) and the measurement obtained from the receive antenna with the shielded enclosure in the vicinity of the access panel (transmit-on), respectively, without changing the relative positions of transmit and receive antennas.

NOTE: The propagated external field level by the transmit antenna (reference reading), $P_{Ref}$, is equal to the signal generator output plus the antenna gain minus the cable loss.

b. Measurement of power levels in linear units (Watts). If the power levels rather than the voltage levels were measured, then the Shielding Effectiveness, $SE_{enclosure\ with\ fitting} = 10\log(P_{Ref}/P_6)$.

NOTE: In general, the convention for a logarithmic calculation will be the power generated by the transmit antenna (reference reading) over the power level measured with the receive antenna (transmit-on).

c. Measurement in terms of non-linear, logarithmic units (such as dB, $dB_{uV}$, $dB_{mW}$). The Shielding Effectiveness, $SE_{enclosure\ with\ fitting} = P_{Ref} - P_6$.



Source: https://assist.dla.mil -- Downloaded: 2016-12-31T21:01Z
Check the source to verify that this is the current version before use.

5.4 Resultant shielding effectiveness of the DUT (Enclosure with DUT installed in fitting). This test methodology is employed in verifying shielding effectiveness after the installation of waveguides, fittings, and the installation of the DUT by measuring for the propagated radio frequency attenuation. This test shall be performed with the transmit antenna in both the parallel and perpendicular directions. In the parallel direction, the radiating elements of the transmit antenna are parallel to the cable length. In the perpendicular direction, the radiating elements of the transmit antenna are perpendicular to the cable length or parallel to the cable circumference. Waveguide shall be lengthened, different EMI gasket used, or other steps taken, if needed, so that there is no degradation of the shielding effectiveness of the shielded enclosure. Measurements shall be performed with the transmit antenna in the horizontal polarization.

5.4.1 Parallel direction for placement of transmit antenna. Place transmit antenna at outside the shielded enclosure 2 meters (6.6 feet) from the location where the cable fitting/penetration will be made. The transmit antenna should be 1 meter (3.3 feet) from the cable and orientated so that the line of sight of the antenna is perpendicular to the cable length (see 5.4), as shown in figures 3308-5 through 3308-7. For figure 3308-7 when using a ridged horn antenna, place the ridged sections parallel to the floor.

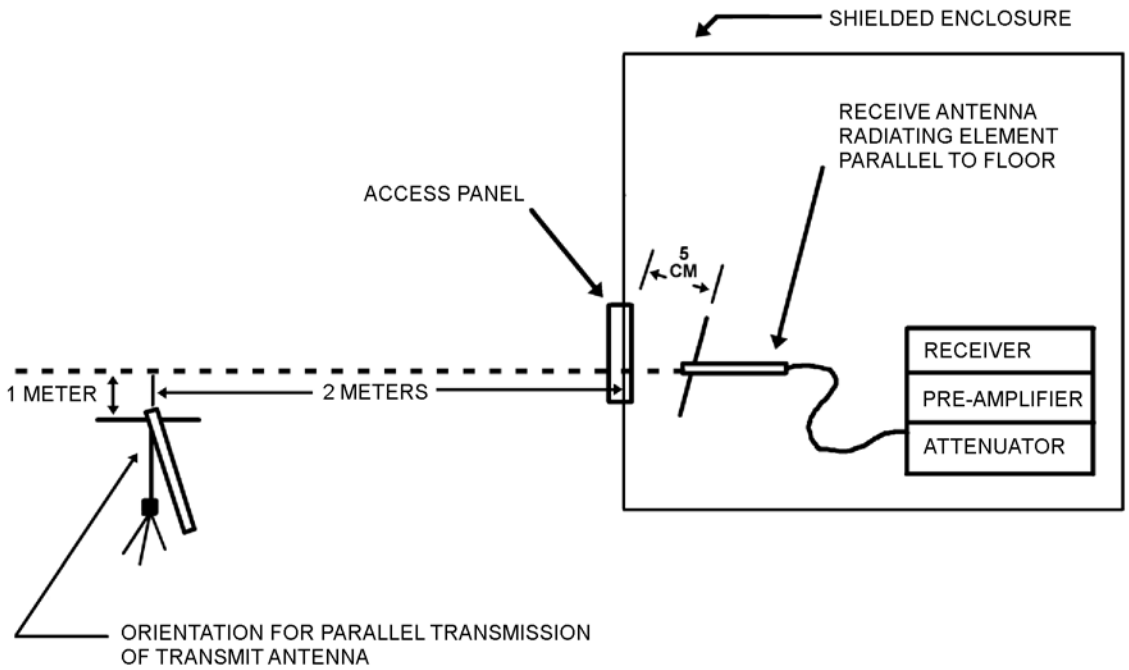


FIGURE 3308-5 Orientation for parallel direction of transmit antenna and dipole antenna placement for shielding effectiveness measurements.



Source: https://assist.dla.mil -- Downloaded: 2016-12-31T21:01Z
Check the source to verify that this is the current version before use.

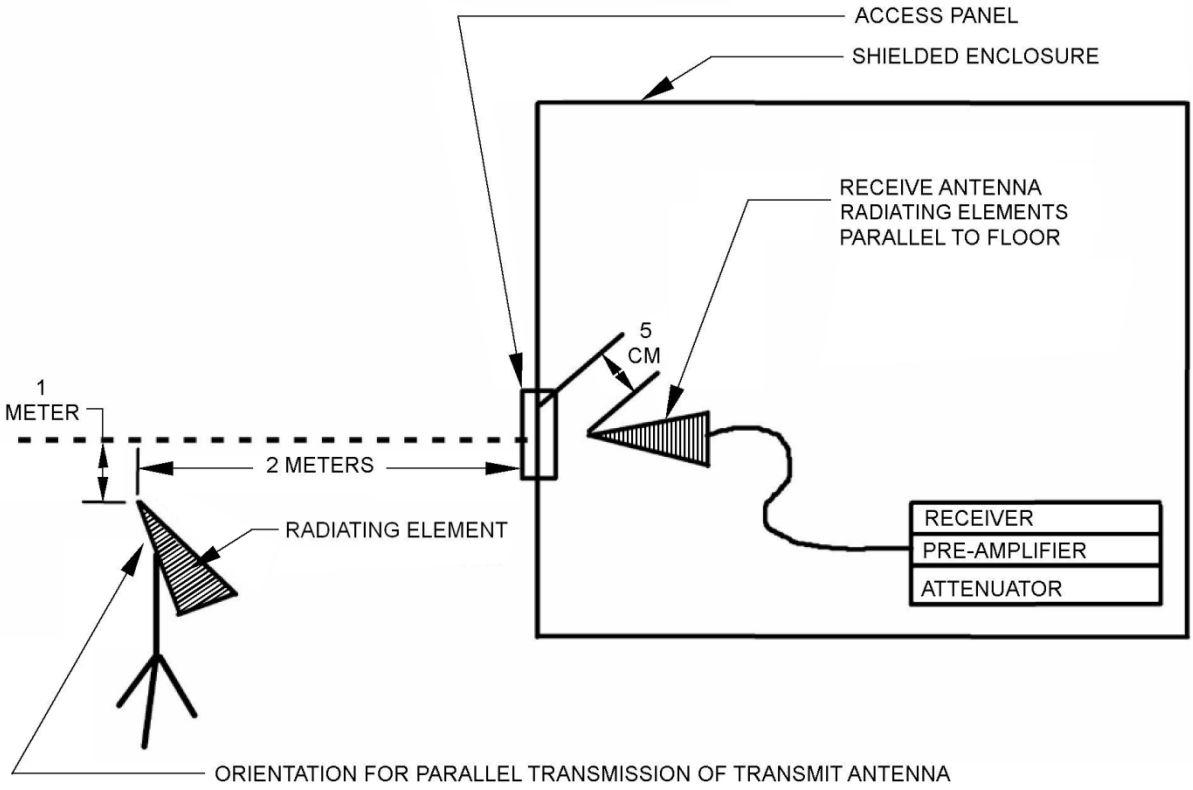


FIGURE 3308-6 Orientation for parallel direction of transmit antenna and log periodic antenna placement for shielding effectiveness measurements.



Source: https://assist.dla.mil -- Downloaded: 2016-12-31T21:01Z
Check the source to verify that this is the current version before use.

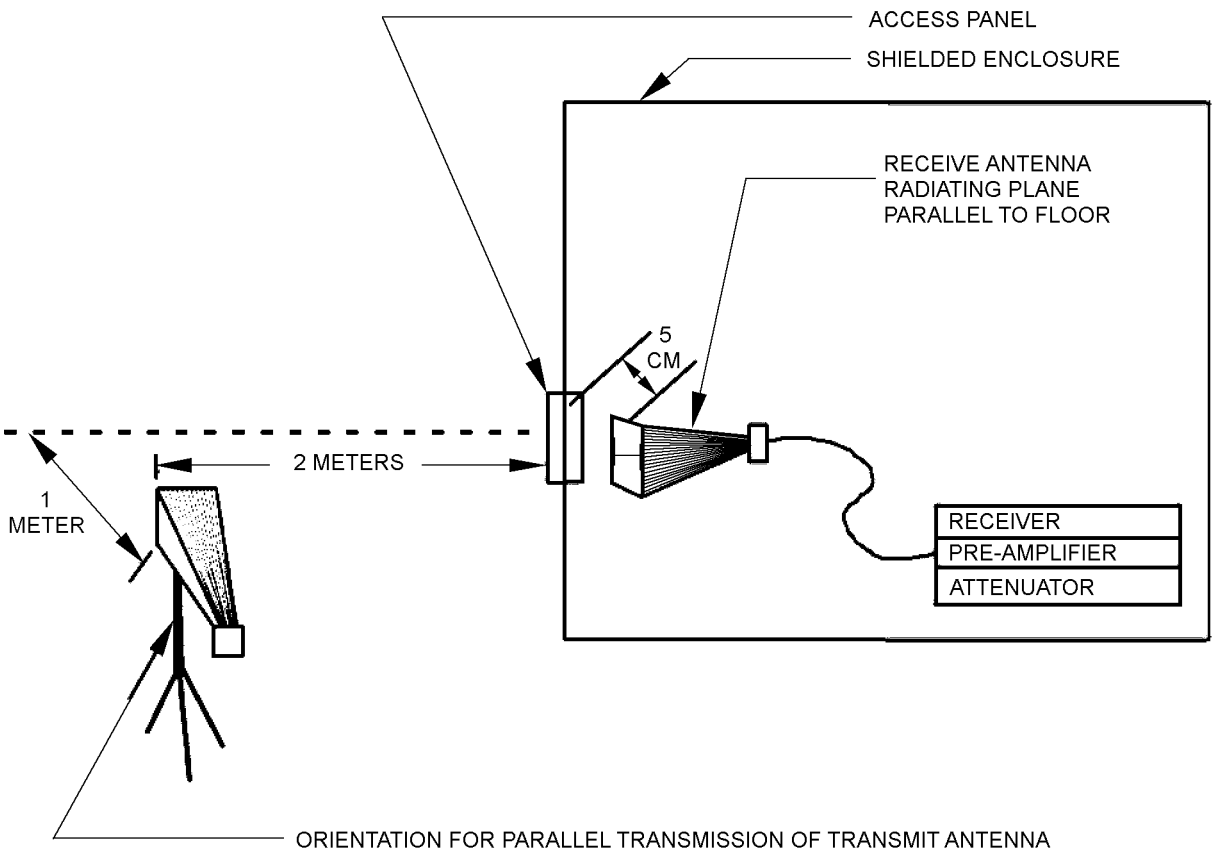


FIGURE 3308-7 Orientation for parallel direction of transmit antenna and horn antenna placement for shielding effectiveness measurements.

a. Cable as DUT. The transmit antenna shall be placed 1 meter (3.3 feet) from the DUT and co-planar to the receive antenna (place on same horizontal plane as the cable).

b. Connector as DUT (receptacle with dust cover configuration). Measurements in the parallel direction are not performed for this connector configuration.

c. Connector as DUT (receptacle with mating plug configuration). Measurements in the parallel direction are required for this connector configuration only if a failure occurs with measurements obtained in the perpendicular direction. The transmit antenna shall be placed 1 meter (3.3 feet) from the connector plug cable and co-planar to the receive antenna.



Source: https://assist.dla.mil -- Downloaded: 2016-12-31T21:01Z
Check the source to verify that this is the current version before use.

5.4.2 Placement and travel of receive antenna. Place the receive antenna inside the enclosure at a distance of 5 cm (2 inches) from the cable (cable as DUT) or from the cable with connector receptacle (connector as DUT).

NOTE: Refer to the first note in 4.1.2 for conditions if there is an allowed deviation from the 5 cm (2 inches) distance.

a. Cable as DUT. Measurements are to be made on the 0.3 meter (11.8 inches) minimum length of the cable that extends beyond the waveguide. First position the receive antenna 5 cm (2 inches) from the cable in the side view (receive antenna radiating elements are perpendicular to the length of the cable). One exception is that there is no radiating element for high frequency horns and not all horns have ridges. In the case of horns with no ridges, setup the horns for horizontal polarization. The receive antenna shall be offset from the transmit antenna, as specified. The receive antenna shall be moved along the 0.3 meter (11.8 inches) length of the cable while measuring the radiated signal strength. Maximize the measurement of the receive antenna for radiated signal, using method employed for co-planar orientation and for no polarization mismatch, as stated in 5.1.3. Second, position the receive antenna in the end view (measure around cable circumference). Move receive antenna around the circumference of the cable at one point long the cable length. Next, move the receive antenna to the next position to be measured along the 0.3 meter (11.8 inches) section of the cable length. Repeat the movement of the receive antenna around the circumference of the cable at this position. Repeat for each position along the 0.3 meter (11.8 inches) section of cable to be measured. Obtain the maximum measurement in the end view. Maximize the measurement of the receive antenna for radiated signal strength, for both co-planar orientation and no polarization mismatch, as stated in 5.1.3. Repeat for each frequency identified in the approved test procedure.

b. Connector as DUT, receptacle with mating dust cover. Measurements in the parallel direction are not performed for this connector configuration.

c. Connector as DUT, receptacle with mating plug. Measurements in the parallel direction are required for this connector configuration only if a failure occurs with measurements obtained in the perpendicular direction. Orientate the receive antenna 5 cm (2 inches) from the cable in the side view (antenna radiating elements are perpendicular to the cable and the longitudinal axis of the connector plug). The receive antenna shall be co-planar with the transmit antenna. The receive antenna shall be moved along the 2 meter (6.6 feet) length of the cable while measuring the radiated signal strength. Maximize the measurement of the receive antenna for radiated signal strength, for both co-planar orientation and for no polarization mismatch, as stated in 5.1.3. Repeat for each frequency identified in the approved test procedure.

5.4.3 Perpendicular direction for placement of transmit antenna. Place transmit antenna outside the shielded enclosure 2 meters (6.6 feet) from the location where the connector receptacle is located in the access panel. The transmit antenna should be 1 meter (3.3 feet) from the cable and orientated so that the line of sight of the antenna is parallel to the cable length (see 5.4), as shown in figures 3308-8 through 3308-10 for testing with the cable as the DUT, figures 3308-11 through 3308-13 with the connector as the DUT. For figure 3308-10 when using a ridged horn antenna, place the ridged sections parallel to the floor.



Source: https://assist.dla.mil -- Downloaded: 2016-12-31T21:01Z
Check the source to verify that this is the current version before use.

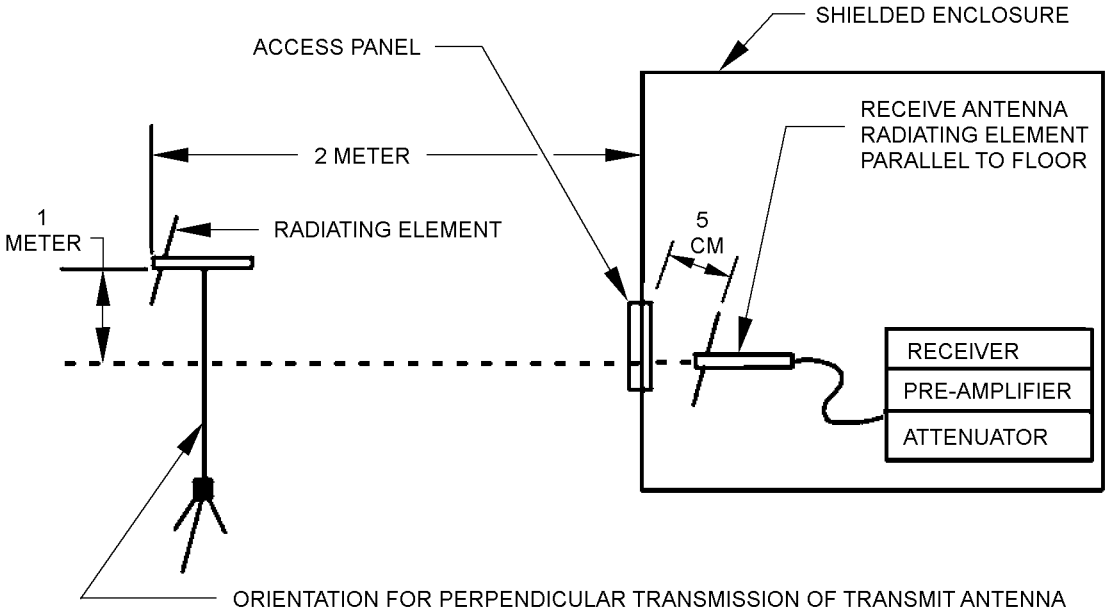


FIGURE 3308-8. Orientation for perpendicular direction of transmit antenna and dipole antenna placement for cable shielding effectiveness measurements.

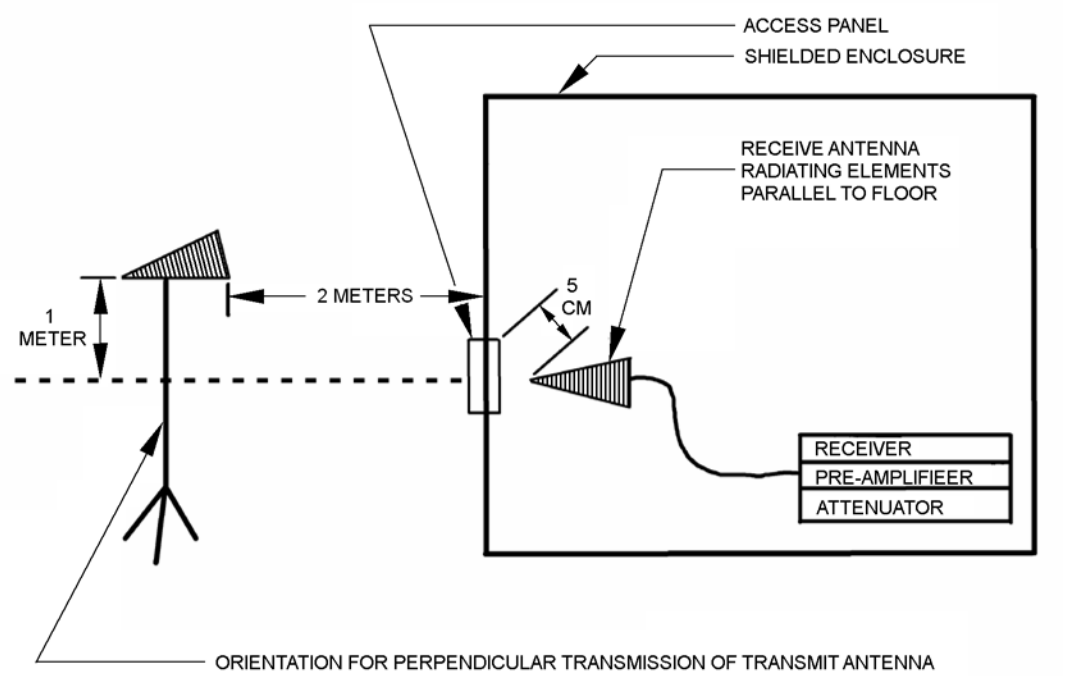


FIGURE 3308-9. Orientation for perpendicular direction of transmit antenna and log periodic antenna placement for cable shielding effectiveness measurements.



Source: https://assist.dla.mil -- Downloaded: 2016-12-31T21:01Z
Check the source to verify that this is the current version before use.

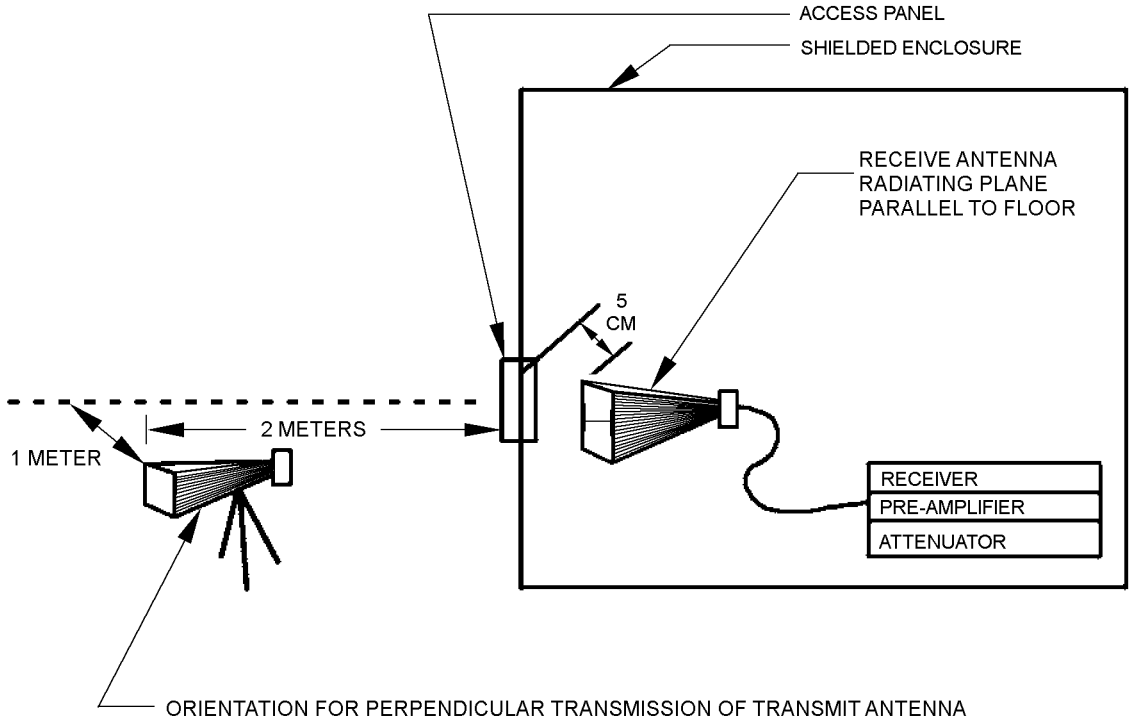


FIGURE 3308-10. Orientation for perpendicular direction of transmit antenna and horn antenna placement for cable shielding effectiveness measurements.

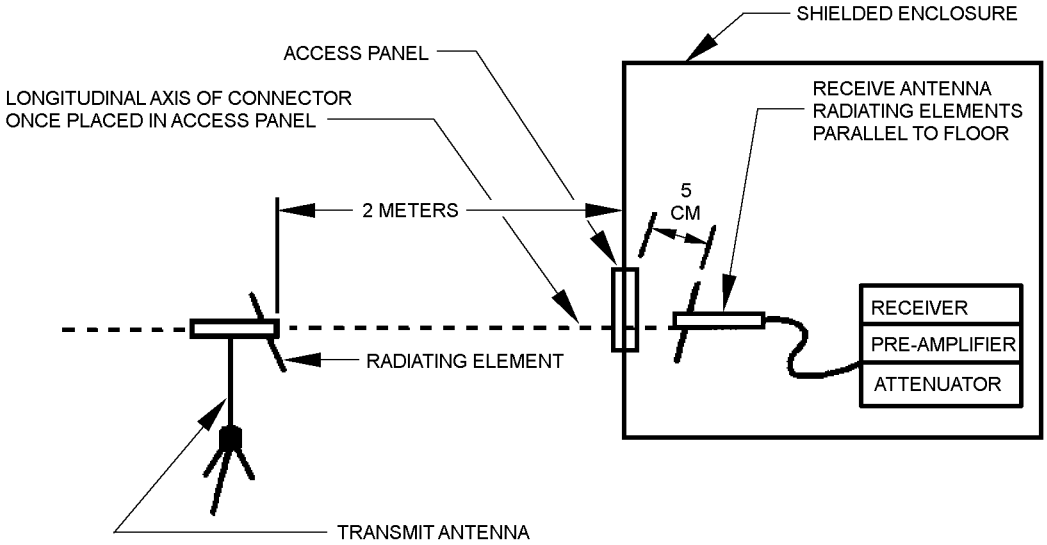


FIGURE 3308-11. Orientation for perpendicular direction of transmit antenna and dipole antenna placement for connector shielding effectiveness measurements.



Source: https://assist.dla.mil -- Downloaded: 2016-12-31T21:01Z
Check the source to verify that this is the current version before use.

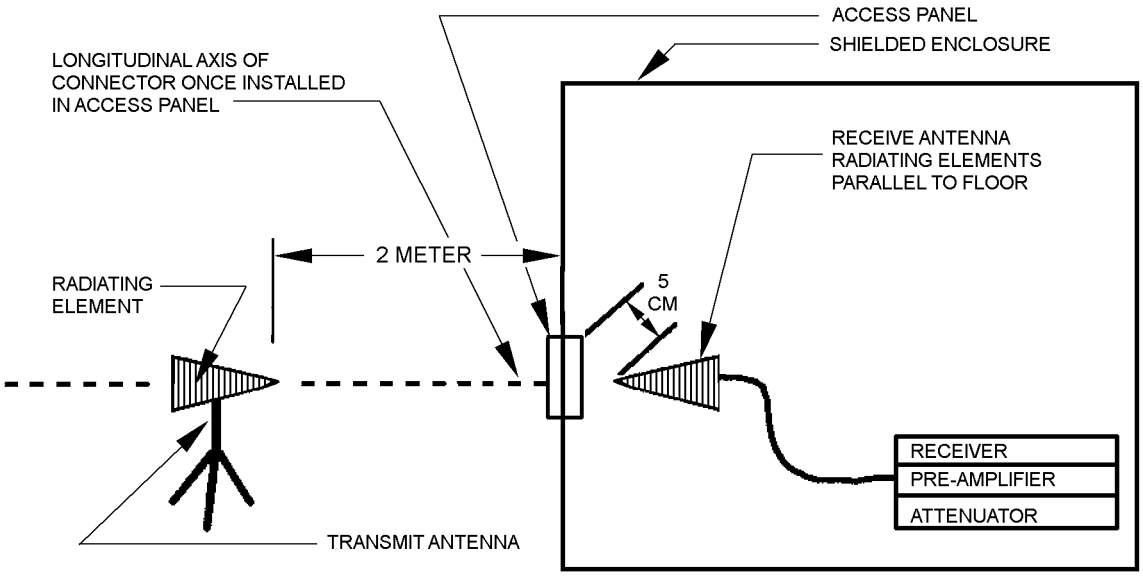


FIGURE 3308-12 Orientation for perpendicular direction of transmit antenna and log periodic antenna placement for connector shielding effectiveness measurements.

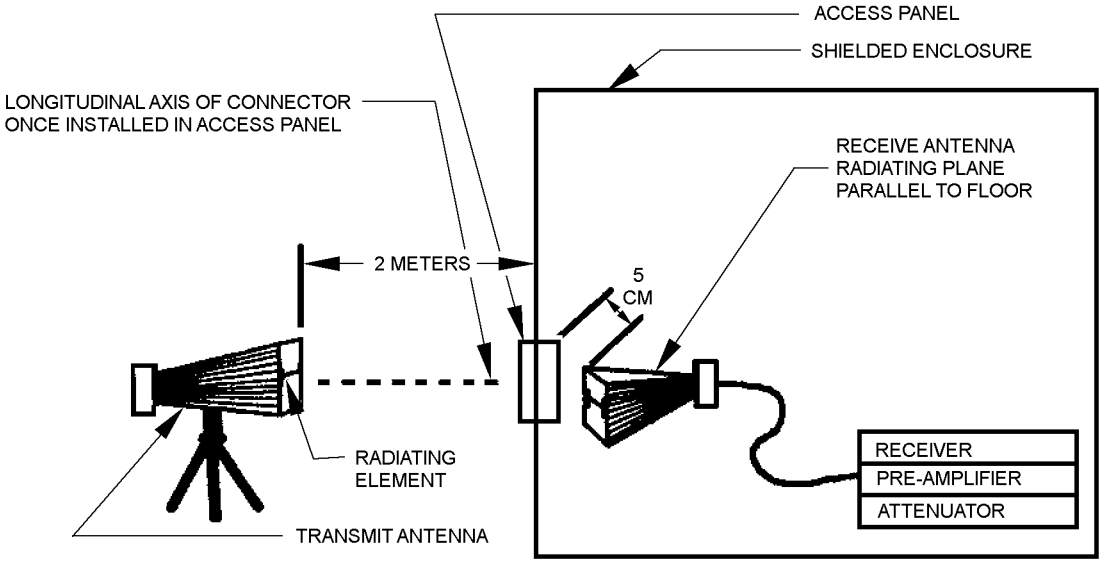


FIGURE 3308-13. Orientation for perpendicular direction of transmit antenna and horn antenna placement for connector shielding effectiveness measurements.



Source: https://assist.dla.mil -- Downloaded: 2016-12-31T21:01Z
Check the source to verify that this is the current version before use.

a. Cable as DUT. For measurements within the plane wave field propagation, the transmit antenna shall be placed 1 meter (3.3 feet) above the DUT and to the receive antenna. For measurements in other field propagations (frequency ranges), the transmit antenna shall be placed 1 meter (3.3 feet) from the DUT and co-planar to the receive antenna.

b. Connector as DUT (receptacle with dust cover configuration). Measurement in the perpendicular direction is performed for this configuration. The transmit antenna shall be placed in line with the connector receptacle end cap and co-planar to the receive antenna. There is no 1 meter (3.3 feet) offset from the radial center of the end cap.

c. Connector as DUT (receptacle with mating plug configuration). The transmit antenna shall be placed in line with the connector receptacle mated to the connector plug and co-planar to the receive antenna. There is no 1 meter (3.3 feet) offset from the radial center of the connector receptacle/plug.

5.4.4 Placement and measurement with the receive antenna. Placement and measurement with the receive antenna shall be the same as for the orientation in the parallel direction.

5.4.5 Measurements to obtain.

a. Ambient measurement (Transmit-off). With the transmit system off, verify the local ambient levels are adequate. For each frequency identified in the approved test procedure, tune the receiver to the specified test frequency using the designated antenna for that frequency. Maximize radiated signal strength as stated in 5.1.3. Record the measure ambient level for each frequency. Repeat for each required frequency.

NOTE: This measurement is designated as $P_7$ if a power level is measured or $E_7$ if a voltage level is measured. All measurements are made at the receive antenna.

b. Induced signal level measurement (Transmit-on). For each frequency used above, tune the transmitter and receiver to each specified test frequency using the designated antenna pair for that frequency. Attenuators may be used at the receiver to avoid saturation. Maximize radiated signal strength as stated in 5.1.3. Record the measured levels via the receive system and record the signal source settings (and amplifier gain settings as applicable) required to produce the resultant field.

NOTE: This measurement is designated as $P_8$ if a power level is measured or $E_8$ if a voltage level is measured. All measurements are made at the receive antenna.

5.4.6 Calculation for shielding effectiveness. The shielding effectiveness of the fiber optic component under test (DUT) when placed in the shielded enclosure (as described in the setup) is determined from the power or voltage levels generated by the transmit antenna (propagated external field level) and those induced in the receive antenna with the DUT inserted into the shielded enclosure, respectively, without changing the relative positions of transmit and receive antennas. Depending on the measurement parameter obtained (such as voltage or power level), one of the calculation methods listed below may apply.

a. Measurement of voltage levels in linear units (Volts). The shielding effectiveness is:

$$SE_{DUT} = 20\log(E_{Ref}/E_8);$$

Where $E_{Ref}$ and $E_8$ are the voltages from the propagated external field level by the transmit antenna (reference reading) and the measurement obtained from the receive antenna with the DUT inserted into the shielded enclosure (transmit-on), respectively, without changing the relative positions of transmit and receive antennas.

NOTE: The propagated external field level by the transmit antenna (reference reading), $P_{Ref}$, is equal to the signal generator output plus the antenna gain minus the cable loss.



Source: https://assist.dla.mil -- Downloaded: 2016-12-31T21:01Z
Check the source to verify that this is the current version before use.

b. Measurement of power levels in linear units (Watts). If the power levels rather than the voltage levels were measured, then the Shielding Effectiveness, $SE_{DUT} = 10\log(P_{Ref}/P_8)$.

NOTE: In general, the convention for a logarithmic calculation will be the power generated by the transmit antenna (reference reading) over the power level measured with the receive antenna (transmit-on).

c. Measurement in terms of non-linear, logarithmic units (such as dB, $dB_{uV}$, $dB_{mW}$). The Shielding Effectiveness, $SE_{DUT} = P_{Ref} - P_8$.

5.4.7 Calculation for propagated radio frequency (RF) attenuation. The propagated RF attenuation is the shielding effectiveness of the DUT, $SE_{DUT}$.

5.5 Analysis and documentation.

5.5.1 Data sheet. In addition to the information listed in measurement support process 2201 of MIL-STD-1678-2, the following items are to be included on the data sheet. Data sheet shall include the company performing the test name and address and the following columns: Frequency, field propagation/orientation, enclosure shielding effectiveness, reference level, dynamic range, measured level, propagated RF attenuation, required RF attenuation, and pass/fail. The reference level shall include the source output, receiver sensitivity, and antenna gain. The propagated RF attenuation is the measured level subtracted from the dynamic range.

5.5.2 Test report. The test report shall be submitted after the test and include the exact procedure followed (procedure number if an existing, DLA Land and Maritime approved procedure was used or a marked-up procedure if there were deviations/revisions to the DLA Land and Maritime approved procedure), equipment used for each test, equipment calibration dates, test results in graphical and tabular format, photographs/sketches of the test setups, results, conclusions, and recommendations.

6. Notes.

6.1 Intents behind standardization efforts.

6.1.1 Multiple party testing considerations. The incentive to minimize test variables, resulting in a level playing field for multiple parties testing, leads the Government to establish a baseline. This baseline includes considerations for fabrication of test samples, methods to employ launch conditions and use of specific test practices in addition to specifics for test sample configurations.

6.2 Safety considerations.

6.2.1 Regulations. It is recommended that the test laboratory follow safety practices for measurements of electromagnetic fields. Commercial standards include IEEE C95.1 (Standard for Safety Levels with Respect to Human Exposure to Radiofrequency Electromagnetic Fields) and IEEE C95.3 (Standard Recommended Practices for Measurement of Potentially Hazardous Electromagnetic Fields, RF and Microwave). Also, the military must be in compliance with applicable documentation such as NAVSEA OP 3565/NAVAIR 16-1-529/NAVELEX 0967-LP-624-6010, Volume 1, Technical Manual, Electromagnetic Radiation Hazards (Hazards to Personnel, Fuels and Other Flammable Material) and Volume II, Technical Manual, Electromagnetic Radiation hazards (Hazards to Ordinance).

6.2.2 Considerations in obtaining the dynamic range. A more sensitive receiver (one with a lower noise floor) can be used rather than increasing the output power of the transmitting signal generator.



Source: https://assist.dla.mil -- Downloaded: 2016-12-31T21:01Z
Check the source to verify that this is the current version before use.

# APPENDIX A

## SUMMARY OF DISTINCT STEPS OR MEASUREMENT PHASES IN TEST

A.1 Intent. The test employed in evaluating the electromagnetic effects of the fiber optic modification to the enclosure consists of distinct steps or measurement phases.

A.2 Distinct steps or measurement phases. The distinct steps or measurement phases are summarized in A.2.1 through A.2.5.

A.2.1 Dynamic range (Instrumentation). This step is intended to illustrate the instrumentation to be employed in the evaluation is working properly and has significant dynamic range (as defined in IEEE-STD-299) to adequately measure the full range of frequency and sensitivity relative to the noise floor to discriminate low levels signals and to establish the baseline signal relationship between the transmit and receiving systems without any attenuation present. This step will also define the repeatable transmit equipment settings to be used in follow on stages of the evaluation.

A.2.2 Isolation measurement of enclosure shielding (Enclosure). This step will establish the baseline shielding effectiveness of the existing (unmodified) enclosure using the settings and procedures used in the previous step. Measurements made are to include those in the vicinity of utility entrances, doors and access panels.

A.2.3 Isolation measurement of enclosure shielding with fitting installed (Enclosure with fitting). This step will determine the resultant shielding effectiveness of the enclosure with the penetrative fitting (feed through or connectorized). Measurements made are to include those in the vicinity of the access panel where the waveguide for testing of cable or receptacle for testing of a connector will later be installed.

A.2.4 Resultant Shielding Effectiveness of the DUT (Enclosure with DUT installed in fitting). This step will determine the resultant shielding effectiveness of the enclosure with the complete fiber optic cable or connector installation, inclusive of any fittings or hardware.

A.2.5 Analysis. A comparison of shielding effectiveness levels for pre-existing and modified enclosure configurations, and determination of acceptability of any degradation in shielding effectiveness observed.



Source: https://assist.dla.mil -- Downloaded: 2016-12-31T21:01Z
Check the source to verify that this is the current version before use.

APPENDIX B

REQUIREMENTS FOR ELECTROMAGNETIC EFFECTS MEASUREMENT

B.1. Fiber optic component.

B.1.1. Cable (MIL-PRF-85045, see 3.7.16). The propagated radio frequency (RF) attenuation of the modified enclosure, inclusive of the fiber optic cable and related fittings shall be not less than 100 dB attenuation for frequencies not greater than 1 GHz and 60 dB attenuation at 10 GHz.

B.1.2. Connectors (MIL-PRF-28876, see 3.14.9). The propagated radio frequency (RF) attenuation of the modified enclosure, inclusive of the fiber optic connector and related fittings shall be not less than 60 dB attenuation for frequencies not greater than 10 GHz.

B.2. Frequency.

B.2.1. Required frequencies. The minimum number of test frequencies to be used is shown in table 3308-BI.

B.2.2. Frequency bands. The basic frequency bands for evaluation are from 9 kHz to 18 GHz.

B.2.3. Below required test frequencies. Below 20 MHz both H & E fields shall be evaluated. Testing across this frequency band may be swept, or measured at discrete frequencies in sufficient number to ensure accurate results, as described in the approved test procedure.

TABLE 3308-BI. Electromagnetic effects test frequencies.

| Field propagation | Test frequency | | |
|---|---|---|---|
| | 1 | 2 | 3 |
| Plane wave | 100 MHz | 400 MHz | 1 GHz |
| Microwave | 10 GHz | --- | --- |



Source: https://assist.dla.mil -- Downloaded: 2016-12-31T21:01Z
Check the source to verify that this is the current version before use.

APPENDIX C

TEST EQUIPMENT

C.1. Transmitting equipment. The drive system is to include the following: signal/frequency source (generator), power amplifier (if required), optional pre-amplifier, transmit antenna, shielded cable. See table 3308-CI for antenna types. Matched antennas must be used (transmit and receive).

TABLE 3308-CI. Antenna types.

| Field propagation | Antenna type |
|---|---|
| Plane wave | Log periodic or dipole |
| Microwave | Horn |

C.1.1. Definition for matched antennas. Two antennas are considered matched antennas or like antennas when both are of the same model, same bandwidth (usable frequency range) and same cross pole rejection (linearly polarized).

C.1.2. Concern with use of unmatched antennas. Larger measurement error is unnecessarily introduced with the use of unmatched antennas. This is due to greater variation within the electrical parameters.

C.1.3. Allowance for use of unmatched antennas. Unmatched antennas will be allowed if care is taken in the antenna setup and the dynamic range verification is performed in the manner stated below.

a. Antenna setup. Radiated signal strength is maximized during placement and travel (movement along the DUT in both end view and side view) of the receive antenna. Maximization for co-planar orientation and for no polarization mismatch shall be performed during this travel. This process is repeated and two measurements for each position of travel, co-planar orientation, and polarization do not deviate by 2 dB.

b. Dynamic range verification. Ensure antenna gain is maintained at each test frequency (drops as low as the noise floor may be seen at some frequencies).

C.2. Receiving equipment. The sensing system is to include the following: Receiver (such as a spectrum analyzer), optional pre-amplifier, attenuator, receive antenna, shielded cable. See table 3308-CI for antenna types.

C.3. Equipment verifications.

C.3.1. Matched antennas. Provide documentation to verify matched antennas are used and for which frequency(s), generating, and receiving equipment have sufficient capacity and sensitivity, respectively.

C.3.2. Calibration. For equipment requiring calibration, provide NIST traceable calibration information. In general, test equipment is to be calibrated and be within the manufacturer's published limits of error. The calibration shall be traceable the National Institute of Standards and Technology (NIST) and conform to NCSL-Z540.3. At a minimum, the following test equipment must be calibrated:

a. Antennas.

(1) Antenna factor. Antenna factor versus frequency calibration at stepped frequencies through the frequency range shall be in the form of charts or tabulated values and shall be traceable to NIST. The antenna factors shall be included in the test report.



Source: https://assist.dla.mil -- Downloaded: 2016-12-31T21:01Z
Check the source to verify that this is the current version before use.

(2) Gain. Peak antenna gain versus frequency calibration at stepped frequencies through the frequency range shall be in the form of charts or tabulated values and shall be traceable to NIST. Peak antenna gain shall be within ± 0.5 dB. The table/chart for gain shall be included in the test report.

(3) Voltage Standing Wave Ratio (VSWR) or return loss. The energy of the reflected signal to the incident energy shall be a maximum of 2:1 as defined in a linear ratio (VSWR). As an alternative, the return loss is this same parameter expressed in a logarithmic scale and shall be a maximum of 9.54 dB.

(4) Electrical characterization of parameters. At a minimum, the electrical characterization of cross pole rejection shall be verified. The cross pole rejection for each antenna shall be a minimum of 20 dB. This electrical characterization can be obtained from the antenna manufacturer and does not need to have a calibration that is traceable to NIST. The delta or difference in cross pole rejection between the two antennas is of interest. The delta for this parameter shall be within 3 dB.

b. Receiver. The calibration of the spectrum analyzer or other receiver used shall be traceable to NIST. The power level at each frequency shall be within ± 1 dB.

c. Transmitting (source) signal generator. The signal generator used shall be calibrated and traceable to NIST. Parameters of significance include the frequency, wave shape (spectral purity of the electromagnetic wave) and power output (linearity with respect to frequency, power level with respect to repeatable output at each frequency and to personnel hazard considerations of electromagnetic radiation).

d. Other correction factors. Test equipment (for both transmission and measurement) used during testing (such as cable loss and preamplifier gain) for which correction factors are applied shall be calibrated and traceable to NIST. These correction factors are to be included in the test report.

C.3.3. Interconnecting cabling. Verify that connecting cables have 50 ohm impedance (to obtain maximum power transfer).

C.3.4. Authorization to radiate. Test laboratory authorization to radiate shall include a through e.

a. Applicability. The test laboratory is responsible for obtaining authorization to radiate when testing includes radiating in an unshielded environment.

b. Alternative of testing in a shielded environment. Authorization is not required when the entire test can be conducted within an RF shielded environment. This testing must be done with the assurance that no radiation will be transmitted outside of this shielded environment. Two adjacent shielded enclosures or a shielded enclosure with anteroom setup with an access panel in between satisfies this requirement. The area in each enclosure must be of sufficient size to conduct the test properly.

c. Mechanism to obtain authorization.

(1) Commercial test laboratory. Application for permission to radiate must be submitted to the Federal Communications Commission (FCC). If there is an interfering station at one or more test frequencies at that location, then the FCC will provide an alternate frequency at which the radiation is performed. If the alternate frequency deviates by more than 1 percent, then acceptance by the qualifying activity is required.

(2) Test laboratory on a military base. Application for permission to radiate must be submitted to the Office of Frequency Management at the National Telecommunications Information Agency (NTIA). The NTIA will stipulate any test restrictions.

d. Equipment meeting the Effected Radiated Power (ERP). See C.5. herein.



Source: https://assist.dla.mil -- Downloaded: 2016-12-31T21:01Z
Check the source to verify that this is the current version before use.

e. Safety considerations. See 6.2.

C.4. Shielded enclosure. The minimum value for the shielding effectiveness of the shielded enclosure at each frequency shall be no less than the requirement for the propagated radio frequency at each frequency tested.

C.5. Equipment information required for determining the Effected Radiated Power (ERP). The ERP is a function of the power level and the frequency. For each frequency, the maximum output of the transmitting signal generator, the loss in transporting energy through the cable, and the gain in the transmitting antenna is required.

C.6. Other. Dielectric tripods and dielectric tie-offs shall be used.

C.7. Connector test specimen configuration. The connector plug shall be terminated with at least 5 meters (16.4 feet) of multiple fiber cable. The connector receptacle shall be terminated with at least 2 meters (6.6 feet) of OFCC (termini with single fiber cables to fill each cavity in the connector receptacle). Unless otherwise specified in the approved test procedure, MIL-PRF-85045 cable shall be used.



Source: https://assist.dla.mil -- Downloaded: 2016-12-31T21:01Z
Check the source to verify that this is the current version before use.

APPENDIX D

MINIMUM ESSENTIAL CHECKLIST FOR ELECTROMAGNETIC EFFECTS MEASUREMENTS

D.1. Purpose. This appendix addresses a checklist of the minimum essentials for the electromagnetic effects measurement.

D.2. Usage. Table 3208D-I is the checklist of minimum essentials for Government auditors, or their representatives, use during inspections. This checklist should be expanded at the auditor's discretion.

TABLE 3308D-I. Minimum essential checklist for electromagnetic effects measurements.

| Number | Category | Item | Requirement | Compliance |
|---|---|---|---|---|
| 1 | Test sample | Cable (see C.7)<br><br>Connectors (see C.7)<br>Cable length (receptacle end):<br>Cable length (plug end): | 6 meter (19.7 foot) minimum (see 4.7.6.16.1 of MIL-PRF-85045)<br>Mated as shown in figure 3308-3<br>2 meters (6.6 foot) minimum<br>5 meters (16.4 foot) minimum | |
| 2 | Room ambient environmental condition | Standard ambient (if test equipment built to operate in this range, if not-then controlled ambient) | 23 ± 5°C/73 ± 9°F and 20 to 70 percent RH | |
| | | Controlled ambient | 23 ± 2°C/73 ± 4°F and 45 to 55 percent RH | |
| 3 | Setup | Test setup fiber optic cable routing | Bend diameters ≥ min long term bend diameter | |
| | | | Sharp twists and bends avoided | |
| | | | Avoid protrusions/other obstacles | |
| | Dynamic range | Positioning of matched antennas | Placed 2 meters (6.6 feet) apart, 2 meters (6.6 feet) from reflective surface, in horizontal plane | |
| | | Maximize coupling | Move in translational manner<br>Move in rotational manner | |
| | Isolation (enclosure only) | Positioning of matched antennas | Same as done for dynamic range | |
| | | Maximize coupling | Same as done for dynamic range | |
| | | Other actions | Cap ports in access panel<br>Isolate instrument power source | |



Source: https://assist.dla.mil -- Downloaded: 2016-12-31T21:01Z
Check the source to verify that this is the current version before use.

TABLE 3308D-I. Minimum essential checklist for electromagnetic effects measurements - Continued.

| Number | Category | Item | Requirement | Compliance |
|---|---|---|---|---|
| 3 | Isolation (enclosure with fitting) | Positioning of matched antennas | Same as done for dynamic range | |
| | | Maximize coupling | Same as done for dynamic range | |
| | | For a cable tested (required) | Straight waveguide in access panel ID-to-length ratio of 1 to 72. | |
| | | For a connector tested (optional) | Mounting plate with EMI gasket on access panel, then blank cover plate installed. | |
| | | Other actions | Isolate instrument power source. | |
| | Resultant shielding effectiveness (enclosure w/ DUT and fitting) | For a cable tested | Length: 6 meters (19.7 foot) minimum. Length protruding from waveguide inside enclosure: 0.3 meters (11.8 inches). Extended 1 meter (3.3 feet) above floor, perpendicular to enclosure wall. | |
| | | For a connector tested | Receptacle on outside of access panel.<br>Same EMI gasket used as above<br>Configuration 1: Receptacle with dust cover.<br>Configuration 2: Plug with backshell mated to receptacle. | |
| | | Cable routing when connector tested | Parallel direction: Route parallel to floor for 5 meters (16.4 feet) and secure dielectrically (see figure 3308-3).<br>Perpendicular direction: At 1 meter (3.3 foot), tie to dielectric stand and route perpendicular to floor, then straight run 45 degree to right (see figure 3308-4). | |



Source: https://assist.dla.mil -- Downloaded: 2016-12-31T21:01Z
Check the source to verify that this is the current version before use.

TABLE 3308D-I. Minimum essential checklist for electromagnetic effects measurements - Continued.

| Number | Category | Item | Requirement | Compliance |
|---|---|---|---|---|
| 4 | Test equipment | Calibration | Meets C.3.2 | |
| | | Antennas | Antenna type used for each field propagation (see table 3308-CI). Matched antennas used (C.3.1.). | |
| | | Tripods and tie offs | Dielectric type used. | |
| | | Approved shielded enclosure | Meets isolation tests (5.2, 5.3) and C.4. | |
| | | Approved test equipment | Meets dynamic range (5.1) Receiving equipment consists of items in C.2. | |
| | | Interconnecting cabling | Correct impedance (C.3.3.) | |
| | | Authorization to radiate (C.3) | Commercial: FCC, military: NTIA Met ERP (see C.5). | |
| 5 | Test procedure | Dynamic range | Ambient verification: Max signal strength for each frequency – translation and rotation.<br>a. Transmitter off.<br>b. Transmitter on.<br>c. Calculate dynamic range. | |
| | | Isolation (enclosure only) | Use same setting on transmit as in dynamic range.<br>Do same procedure as for Dynamic range (see figure 3308-1) except receive antenna 5 cm (2 inches) from mounting plate.<br>Calculate shielding effectiveness. | |
| | | Isolation (enclosure with fitting) | Use same setting on transmit as in dynamic range.<br>Do same procedure as for Dynamic range (see figure 3308-1), except waveguide/penetrating fitting installed (see figure 3308-2 for cable, figure 3308-3 for connectors). Also, do not change positions of transmit and receive antenna from prior test.<br>Calculate shielding effectiveness. | |



Source: https://assist.dla.mil -- Downloaded: 2016-12-31T21:01Z
Check the source to verify that this is the current version before use.

TABLE 3308D-I. Minimum essential checklist for electromagnetic effects measurements - Continued.

| Number | Category | Item | Requirement | Compliance |
|---|---|---|---|---|
| 5 | | Resultant shielding effectiveness (enclosure w/ DUT and fitting) | Install DUT into waveguide or penetrating fitting (figure 3308-2 for cable, figures 3308-3 and 3308-4 for connectors). Perform same procedure except in both parallel (figures 3308-5 to 3308-7) and perpendicular (figures 3308-8 to 3308-10 for cable, figures 3308-11 to 3308-13 for connector) directions.<br>Calculate propagated RF attenuation (see 5.4.7). | |
| | | Other process considerations | Safety considerations (see 6.2). | |
| | | | Compliance with measurement 3308. | |
| 6 | Analysis and calculation | Data sheet | Compliance with measurement support process 2201.<br>Includes: company performing the test name and address, frequency column, field propagation/orientation column, enclosure shielding effectiveness column, reference level column, dynamic range column, measured level column, propagated RF attenuation column, required RF attenuation column, pass/fail column.<br>Verify correct method used and calculated properly (see 5.1.4, 5.2.4, 5.3.3, 5.4.6, 5.4.7). | |



Source: https://assist.dla.mil -- Downloaded: 2016-12-31T21:01Z
Check the source to verify that this is the current version before use.

TABLE 3308D-I. Minimum essential checklist for electromagnetic effects measurements - Continued.

| Number | Category | Item | Requirement | Compliance |
|---|---|---|---|---|
| 6 | Analysis and calculation | Test report | Compliance with measurement support process 2201.<br>Includes: exact procedure followed (procedure number if an existing DLA Land and Maritime approved procedure was used or a marked-up procedure if there were deviations/revisions to the DLA Land and Maritime approved procedure), equipment used for each test, equipment calibration dates, test results in graphical and tabular format, photographs/sketches of the test setups, results, conclusions and recommendations. | |
| 7 | Pass/fail criteria | Proper criteria implemented | Test operators know if fail and to verify result.<br>Met propagated RF attenuation at each test frequency (see B.1).<br>Shielding effectiveness measurements not below power level established for dynamic range. | |

D.3. Notes.

D.3.1. Intended use.

D.3.1.1. Audit team. This checklist is intended to assist Government auditors or their representatives during inspections of the optical measurement system. This checklist may be augmented at the auditor's discretion; however, it is not to be reduced.

D.3.1.2. Test laboratories. When test laboratories prepare to perform mechanical shock measurements or audits, this checklist should be used to supplement Measurement 3308, not replace it.



Source: https://assist.dla.mil -- Downloaded: 2016-12-31T21:01Z
Check the source to verify that this is the current version before use.

MATERIAL MEASUREMENTS

3401 - 3410



Source: https://assist.dla.mil -- Downloaded: 2016-12-31T21:01Z
Check the source to verify that this is the current version before use.

MEASUREMENT 3401.1

FUNGUS RESISTANCE

1. Purpose. This measurement is intended to provide further direction for decontamination, processes, and evaluation criteria to ensure that this measurement is performed in a consistent manner. Former testing has shown inconsistent results. Suspected causes are contamination (test sample, stock cultures and testing apparatus), use of different preparations (such as solutions and mediums) or procedures and different evaluation criteria. To ensure that the risk to the Government of accepting bad measurement data is low, to minimize test variations and to permit more accurate comparison of test results from multiple sources, a “standardized” approach is specified to perform this measurement.

2. Applicable documents.

2.1 General. The documents listed in this section are specified in sections 3, 4, or 5 of this standard practice. This section does not include documents cited in other sections of this standard practice or recommended for additional information or as examples. While every effort has been made to ensure the completeness of this list, document users are cautioned that they must meet all specified requirements of documents cited in sections 3, 4, or 5 of this standard practice, whether or not they are listed.

2.2 Government documents.

2.2.1 Specifications, standards, and handbooks. The following specifications, standards, and handbooks form a part of this document to the extent specified herein. Unless otherwise specified, the issues of these documents are those cited in the solicitation or contract.

DEPARTMENT OF DEFENSE STANDARD

MIL-STD-810 - Environmental Engineering Considerations and Laboratory Tests.

DEPARTMENT OF DEFENSE HANDBOOKh

MIL-HDBK-454 - General Guidelines for Electronic Equipment

(Copies of these documents are available online at http://quicksearch.dla.mil or from the Standardization Document Order Desk, 700 Robbins Avenue, Building 4D, Philadelphia, PA 19111-5094.)

2.2.2 Non-Government publications. The following documents form a part of this document to the extent specified herein. Unless otherwise specified, the issues of these documents are those cited in the solicitation or contract.

TELECOMMUNICATIONS INDUSTRY ASSOCIATION

TIA-455-56 - Test Method for Evaluating Fungus Resistance of Optical Fiber and Cable.

(Copies are available online at www.tiaonline.org or from Telecommunications Industry Association (TIA), 2500 Wilson Boulevard, Suite 300, Arlington VA 22201.)



Source: https://assist.dla.mil -- Downloaded: 2016-12-31T21:01Z
Check the source to verify that this is the current version before use.

2.3 Order of precedence. Unless otherwise noted herein or in the contract, in the event of a conflict between the text of this document and the references cited herein, the text of this document takes precedence. Nothing in this document, however, supersedes applicable laws and regulations unless a specific exemption has been obtained.

3 Definitions.

3.1 Fungi. A term used to identify the two groups of yeasts and molds.

3.2 Conidia. Spores or rounded forms found at the ends of some hyphae.

3.3 Hyphae. The interwoven filaments that are a part of a mold. These filaments form masses (called mycelium).

3.4 Mold. The five fungi used in the fungus resistance test are molds. Either spelling of “mould” or “mold” can be used. Moulds will appear “fuzzy” with moderate to heavy growth. The word “mold” is more commonly used in the United States to describe this group of fungi, “mould” in the United Kingdom. A typical mold can be identified by observing hyphae and conidia.

3.5 Spore suspension. Suspension that is sprayed to inoculate test samples and positive controls consist almost entirely of spores. Most of the filaments remain anchored within the agar matrix in which a mold is grown. Other filaments are filtered out during spore suspension preparation.

4 Test method. Fiber optic components composed of materials not listed as fungus inert in guideline 4 of MIL-HDBK-454 shall be tested in accordance with TIA-455-56. In addition, the following requirements for decontamination, fungus cultures and evaluation criteria apply. The checklist in appendix A is provided to ensure compliance for inspection purposes.

4.1 Test criteria.

4.1.1 Test (incubation) duration. Unless otherwise specified, test shall be performed for 28 days.

4.1.2 Test temperature: 86 ± 2 $^{o}$F (30 ± 1 $^{o}$C).

4.1.3 Test relative humidity: Percentage of RH greater than 90 but less than 100.

4.1.4 Fungi types. Types of fungi used shall be those specified in table 3401-I.

4.2 Suitability of fungus cultures.

4.2.1 Culture stock acceptable sources of supply. Fungus cultures shall be obtained from either the United States Department of Agriculture (USDA) or the American Type Culture Collection (ATCC). Web Site for USDA culture collection catalog is http://nrrl.ncaur.usda.gov (see 6.3).

4.2.2 Culture stock replenishment interval. Unless subcultures are actively grown, stock cultures must be replaced after 4 months.



Source: https://assist.dla.mil -- Downloaded: 2016-12-31T21:01Z
Check the source to verify that this is the current version before use.

4.2.3 Subcultures from pure stock. Stocks of each fungus may be maintained by actively growing them from stock cultures obtained originally from USDA or ATCC. Stock cultures shall not be kept more than 4 months at 43 ± 7 °F (6 ± 4 °C). After four months at 43 ± 7 °F, new subcultures must be prepared and used for the new stock.

TABLE 3401-I. Fungi types for test.

| Fungi Types | | Identification Numbers | | Figures 1/ |
|---|---|---|---|---|
| Generic Listing | USDA Listing | USDA NRRL # | ATCC # | |
| Aspergillus flavus | | 3537 | 9643 | 3401-1 |
| Aspergillus niger | Aspergillus niger van Tieghem | 3536 | 9642 | 3401-2 |
| Aspergillus versicolor | | 20734 | 11730 | 3401-3 |
| Chaetomium globosum | Chaetomium globosum Kunze: Fries | 1870 | 6205 | 3401-4 |
| Penicillium funiculosum | Penicillium funiculosum Thom | 3647 | 11797 | 3401-5 |

1/ Figures 3401-1, 3401-2, 3401-3, 3401-4 and 3401-.5 reprinted with permission courtesy of www.doctorfungus.org © 2007.

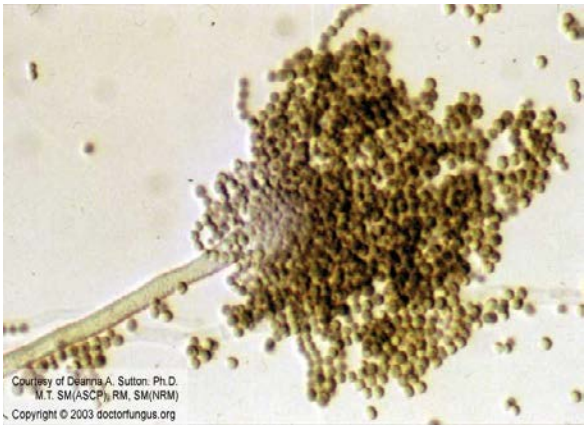


Aspergillus flavus
http://www.doctorfungus.org/imageban/images/ABELCET/02_aflavus.jpg

FIGURE 3401-1. Microscopic photograph of Aspergillus flavus.



Source: https://assist.dla.mil -- Downloaded: 2016-12-31T21:01Z
Check the source to verify that this is the current version before use.

Aspergillus niger
http://www.doctorfungus.org/imageban/images/Dsutton_05feb/A_niger_1.jpg

FIGURE 3401-2. Microscopic photograph of Aspergillus niger.

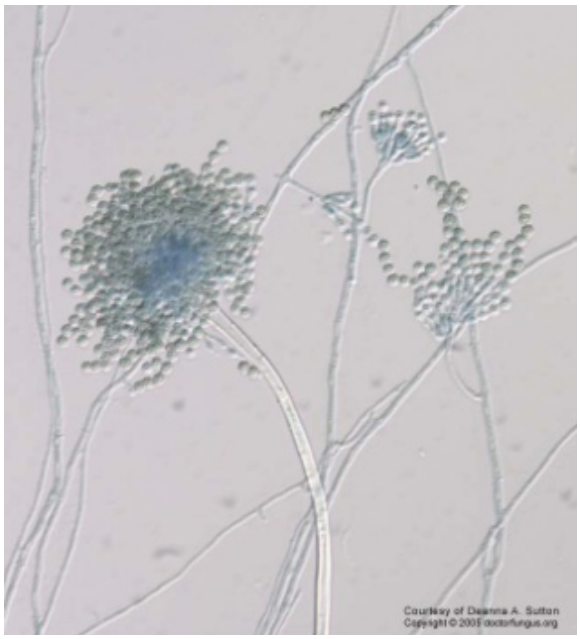

Aspergillus versicolor
http://www.doctorfungus.org/imageban/images/Dsutton_05feb/A_versicolor_2.jpg

FIGURE 3401-3. Microscopic photograph of Aspergillus versicolor.



Source: https://assist.dla.mil -- Downloaded: 2016-12-31T21:01Z
Check the source to verify that this is the current version before use.

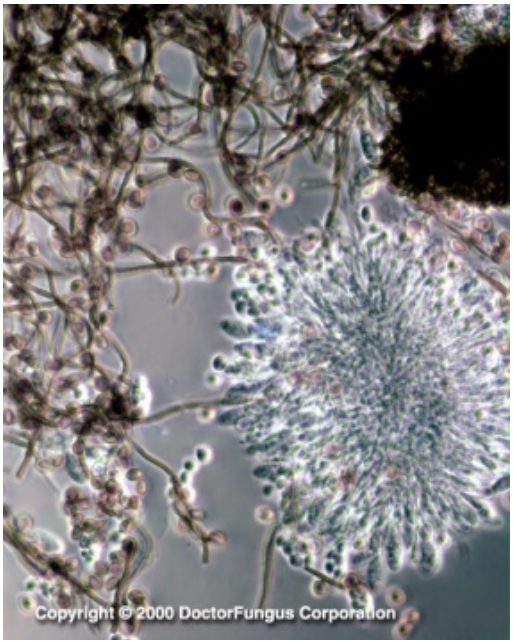


Chaetomium ssp.
http://www.doctorfungus.org/Thefungi/img/cha3.jpg

FIGURE 3401-4. Microscopic photograph of Chaetomium ssp.

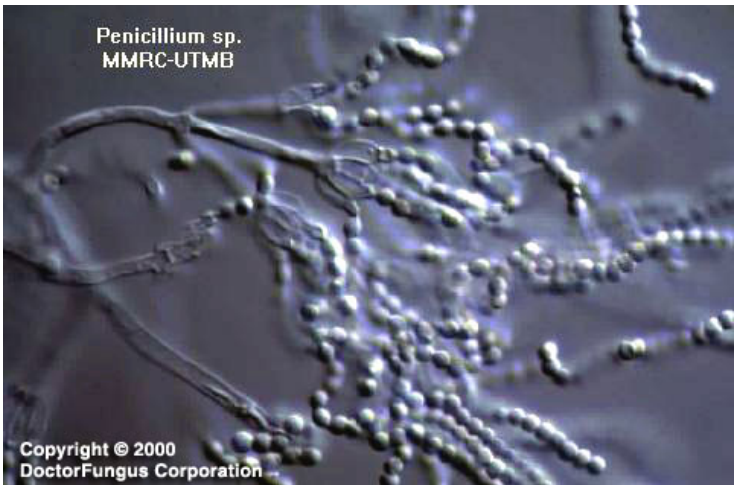


Pencillium spp.
http://www.doctorfungus.org/Thefungi/img/pen1.jpg

FIGURE 3401-5. Microscopic photograph of Pencillium spp.



Source: https://assist.dla.mil -- Downloaded: 2016-12-31T21:01Z
Check the source to verify that this is the current version before use.

4.2.4 Time limit on growing subcultures from one stock. To ensure purity of the actively growing stock cultures, the stock must be renewed every 4 years or less. Risk of contamination occurs each time the stock culture is transferred to prepare the subcultures. After no more than 4 years, the current stock must be discarded. Subcultures must then be grown from new (not previously transferred) stock.

4.3 Test sample considerations.

4.3.1 Sample size. Three test samples of each polymeric component or part.

4.3.2 Preparation of cable samples. A 12 inch (304.8 mm) length of cable shall be tested, strip back 8 inches (203.2 mm) from the end to expose all cable components. Be advised that it may not be able to determine if there is fungus growth on water blocking material.

4.4 Pre-test decontamination processes.

4.4.1 Pre-test decontamination of test samples. Test samples are to be decontaminated prior to testing to ensure no organic contamination has occurred. The decontamination procedure and test sample handling after decontamination must be specified in the test procedure. Test samples are to be decontaminated with reagent grade (> 99 percent pure) isopropyl alcohol prior to testing. Other decontamination methods/agents may be used if approved by the qualifying activity. Appropriate handling measures are to be taken to ensure recontamination does not occur (such as wearing un-powdered gloves during the decontamination process to ensure no contamination from hand oils). Decontamination shall be done at least 72 hours before the start of the test to ensure that volatile materials have evaporated.

4.4.2 Pre-test decontamination of test apparatus. Decontamination shall be done as cited in annex A of MIL-STD-810, Method 508. Wipe or mop the interior of the chamber with hot water to remove any dirt and dead growth. With no test samples in the environmental chamber, heat the chamber to 140 °F (60 °C) or higher for at least 2 hours (with no humidity). Cool the chamber and pans to ambient prior to any test sample placement. Alternate procedure for decontamination of containers/pans may be by sterilization in an autoclave at 250 °F (121 °C) or higher and at 15 psi (0.103 MPa) or greater for 20 minutes or more.

4.4.3 Pre-test decontamination of containers. Decontamination of glassware/containment apparatus to prepare the fungus suspension, nutrient solution and test sample containers shall be sterilized in an autoclave at 250 °F (121 °C) or higher and at 15 psi (0.103 MPa) or greater for 20 minutes or more.

4.4.4 Purity of water and chemicals used for test. Water shall be distilled or of equal purity. Chemicals used for fungus suspension shall be of reagent grade (as defined by the American Chemical Society).

4.5 Test processes.

4.5.1 Environmental chamber. Environmental chamber in which the test is performed shall meet the criteria for the parameters listed in table 3401-II.

4.5.2 Maintaining stock cultures. Each fungus shall be maintained separately on an appropriate medium such as potato dextrose agar.

4.5.3 Spore suspension preparation. Prepare a spore suspension using the process in 4.4.3.2 of MIL-STD-810, method 508. Note that last step in this process is a blended spore suspension. The positive control for stock culture purity requires a separate spore suspension be prepared for each fungus. Perform this positive control prior to blending.

4.5.4 Spore suspension concentration. Spore suspensions from each individual fungus shall be tested with a counting chamber to verify that the resultant spore suspension contains 1,000,000 ± 200,000 spores per milliliter. A counting chamber or haemocytometer is a microscope slide with squares etched on the slide. With the liquid at a specified depth, the number of spores per square is counted.



Source: https://assist.dla.mil -- Downloaded: 2016-12-31T21:01Z
Check the source to verify that this is the current version before use.

TABLE 3401-II. Criteria for environmental chamber parameters.

| Parameter | Criteria |
|---|---|
| Temperature range | 82 °F (28 °C) to 140 °F (60 °C) minimum |
| Temperature variance | ± 2 °F (± 1 °C) |
| Relative humidity range | 50 to 98 percent RH |
| Relative humidity variance | ± 5 percent RH |
| Humidity sensor type | solid state type sensor not affected by water condensation (no lithium chloride sensors) |
| Humidity sensor accuracy | ± 3 percent RH |
| Temperature sensor accuracy | ± 2 °F ( ± 1 °C) |
| Location of test sample versus air flow stream | Install deflectors or screens around test item if in air flow stream of chamber air circulation |
| Humidity generation | No steam injected directly in portion of test chamber interior where it may adversely affect test item and microbial activity |

4.5.5 Positive control for stock culture purity (viability control). Verify purity of spore suspension by inoculating sterile potato dextrose or another nutrient agar plates with 0.2 ml to 0.3 ml of the spore suspension of each fungus (such as the spore suspensions of each fungus separately prior to blending) and incubate for 7 to 10 days at 86 ± 2 °F (30 ± 1 °C). After this period, the absence of copious growth over the entire surface will invalidate the results of any test using these spores.

4.5.6 Positive control during testing. Prepare control strips from unbleached, plain weave 100 percent cotton (no fungicides, water repellents or additives) cloth, dip in solution, dry and inoculate with blended spore suspension as specified in 4.4.3.3.b of MIL-STD-810, method 508.

a. Control strip dimensions. Control strips should be about 3 cm wide. The length should be at least as long as the tallest test item is high.

b. Placement. Place the control strips within the environmental chamber hung vertically and bracketing the items being tested.

c. Control strip inspection after 7 days growth. After 7 days of testing, inspect the growth of the control strips. At least 90 percent of the surface area of each test strip located at the level of the test items should be covered by fungus.

d. Control strip inspection after 28 days. If there is no increase in the fungus growth at the end of the test as compared to the 7 day period, the test is invalid.

4.5.7 Placement of test items in environmental chamber. Place on suitable fixtures or suspend from hangers. Components may be placed on pans or shallow containers. Ensure adequate air flow around the test samples.

4.5.8 Inocculation (4.5 of MIL-STD-810, method 508). Run the environmental chamber with test items and control strips inside for 4 hours at test conditions before inoculating the test items and control strips. Test items and control strips are to be inoculated with the blended spore suspension in the form of a fine mist from an atomizer or nebulizer. All external and exposed internal surfaces are to be inoculated. If the surfaces are non-wetting, then spray surfaces until drops begin to form on them.



Source: https://assist.dla.mil -- Downloaded: 2016-12-31T21:01Z
Check the source to verify that this is the current version before use.

4.5.9 Incubation period. Incubation temperature shall be duration specified in 4.1.1.

4.5.10 Parameters to monitor.

a. Temperature and humidity verses time data. Obtain continuously during the test.

b. Seventh day fungal growth check. After seven days, check for fungus growth on cotton strips. On each test strip, verify that at least 90 percent of surface area located at the level of the test is covered by fungus.

4.6 Posttest decontamination processes.

4.6.1 Post-test decontamination of test samples. Test samples are to be decontaminated after testing and the evaluation performed to ensure no fungal contamination has remained. Decontamination shall be done as cited in annex A of MIL-STD-810. Test samples are to be heated to 140 °F (60 °C) or higher for at least 2 hours and at least 90 percent relative humidity. After this heat sterilization, wash (soak) test samples in a disinfectant (such as heavy chlorine) solution (at 5,000 ppm concentration). Rinse thoroughly to rid of any residual cleaning solutions. Place test samples in a plastic bag and label as being subjected to a fungus test. . As an alternative, decontamination may be sterilized in an autoclave at 250 °F (121 °C) or higher and at 15 psi (0.103 MPa) or greater for 20 minutes or more. The decontamination processes cited assume that the materials can be subjected to the decontamination temperatures without damage. If not, alternate decontamination process may be used if approved by the qualifying activity.

4.6.2 Post-test decontamination of test apparatus. Environmental chamber, pans, etc. are to be decontaminated after testing and the evaluation performed to ensure no fungal contamination has remained. Decontamination shall be done as cited in annex A of MIL-STD-810, method 508. Environmental chamber and other test apparatus are to be heated to 140 °F (60 °C) or higher for at least 2 hours and at least 90 percent relative humidity. After this heat sterilization, wash the environmental chamber. with a sodium or calcium hypochlorite solution at 5,000 ppm concentration. Flush chamber interior with water to limit chlorine contact on metal surfaces. As an alternative, decontamination of other apparatus (glassware/containment apparatus) may be sterilized in an autoclave at 250 °F (121 °C) or higher and at 15 atmospheres or greater for 20 minutes or more.

4.7 Operator exposure considerations (see 6.5). Ensure that the chamber is off prior to opening the chamber door. This action turns off the chamber fans which reduces the spore suspension in the air.

4.8 Verification of minimum essential requirements. The checklist in appendix A is provided to ensure compliance for inspection purposes.

5 Fungus test evaluation criteria. Fungus test evaluation criteria shall be specified in the test procedure. The evaluation criteria listed below may be used or an alternative one proposed. Verify results under magnification to confirm raised fungal growth as opposed to dried residue (see microscopic photographs for the five fungi in figure 3401-1 through 3401-5).

5.1 Rating criteria.

5.1.1 Grade. Pass/fail criteria is based on grade assigned to the observed fungal growth. Grade 0 and grade 1 meet the fungus resistance requirement, whereas grade 2 through grade 4 do not. Table 3401-III shall be used to assign the grade of observed fungus growth.

5.1.2 Supporting description. Table 3401-IV shall be used to determine the supporting description designation of the growth pattern over a specified percentage of the surface in which the microbial growth is observed.



Source: https://assist.dla.mil -- Downloaded: 2016-12-31T21:01Z
Check the source to verify that this is the current version before use.

TABLE 3401-III. Grade assignment for observed fungus growth.

| Grade | Amount Of observed growth on surface | |
|---|---|---|
| | Keyword | Description |
| 0 | None | Devoid of microbial growth. Surface exhibiting no chemical, physical, or structural change. |
| 1 | Trace | Scattered, sparse or very restricted microbial growth. Appearance on surface minor or inhibited. Surface exhibiting no chemical, physical, or structural change. |
| 2 | Slight (Light) | Intermittent infestations. Loosely spread microbial colonies on surface/moderate growth. Includes continuous filamentous growth extending over the entire surface. Surface exhibiting no chemical, physical, or structural change. |
| 3 | Moderate (Medium) | Substantial amount of microbial growth. Surface exhibiting chemical, physical, or structural change. |
| 4 | Severe (Heavy) | Massive microbial growth. Surface decomposed or rapidly deteriorating. |

TABLE 3401-IV. Designation for growth pattern on surface.

| Designation for supporting description | Description |
|---|---|
| S | Spotty |
| P | Patchy |
| U | Uniform growth spread over one or more areas, at least one area exceeding 20 percent of surface. |

5.1.3 Rating designation. The amount of microbial growth observed is recorded by grade, supporting description and percentage of surface in which the microbial growth is observed.

Example: 1P 20% (where “1” represents sparse growth, “P” represents that growth appears in patches, and 20% represents that coverage occurs over 20 percent of the test sample surface.)

5.1.4 Rater’s evaluation and contact information. Most raters have considered the pass/fail boundary (showing sparse or very restricted microbial growth and reproduction with minor or inhibited substrate utilization) around 1P for a certain percentage of surface coverage. Since the rater’s determination is somewhat subjective, it may be prudent for a Government representative to make contact and discuss test results. The rater’s contact information should be included in the test report. The test procedure, or other laboratory documentation, should advise of this request.

5.2 Mold (mould) identification. Mold identification can be performed visually or under magnification (the latter being preferred). Identification of a mold can be done visually by observing mainly for texture and color. Identification as a mold under magnification can be determined by observing for hyphae and conidia.



Source: https://assist.dla.mil -- Downloaded: 2016-12-31T21:01Z
Check the source to verify that this is the current version before use.

5.2.1 Visual inspection (macroscopic morphology). Observation is mainly by texture and color.

a. Texture. The texture criteria for mold conformation shall range from woolly to cottony to somewhat granular.

b. Color. The criteria in table 3401-V shall be used for identification of a mold by color.

TABLE 3401-V. Identification of mold type by color.

| Mold type | Color identification |
|---|---|
| Aspergillus flavus | Mostly olive to lime green. Droplets of fluid (exudate) may be clear to pale brown. Filaments (hyphae) are brown. |
| Aspergillus niger | White, quickly turning black. |
| Aspergillus versicolor | Range from very pale green, to greenish-beige, pinkish-green, salmon green or dark green. Droplets (exudate) from pink to reddish-brown. |
| Chaetomium spp | White, turning grey to olive. |
| Pencillium spp | White, turning blue green, gray, green, olive gray, yellow, or pinkish. |

5.2.2 Microscopic inspection (microscopic morphology). Microscopic inspection should be done under 400x or greater. At a minimum, 100x can be used if the features for a typical mould can be observed. A typical mold can be identified by observing hyphae and conidia. Photographs for the five fungi used in the fungus resistance test are shown in figure 3401-1, 3401-2, 3401-3, 3401-4 and 3401-5.

a. Hyphae. Hyphae are interwoven filaments. These filaments form masses (called mycelium).

b. Conidia. Conidia or spores are rounded forms found at the ends of some hyphae.

5.2.3 Situations requiring microscopic inspection. Verify change observed is fungus growth when material may change under test conditions (such as gelling of water blocking materials under humid conditions). Verify change observed is fungus growth when uncertainty is due to scarcity of growth or unusual characteristics (such as texture, color or pattern). List magnification used for microscopic inspections.

5.2.4 Terminology. See 3.4 and 6.2 to aid in fungus growth identification.

5.2.5 Spore suspension. Suspension that is sprayed to inoculate test samples and positive controls consist almost entirely of spores. Most of the filaments remain anchored within the agar matrix in which a mold is grown. Other filaments are filtered out during spore suspension preparation.

5.2.6 Data sheet. Record the specified rating criteria with parameters provided to assist in mold identification (see 5.1.3). Sample data sheet on which the specified rating criteria are recorded are included in appendix B. In addition to the items for the standard data sheet listed in Measurement Support Process 2201, the data sheet shall include the contents illustrated in appendix B.

6 Notes.

6.1 Intents behind standardization efforts.

6.1.1 Multiple party testing considerations. The incentive to minimize test variables, resulting in a level playing field for multiple parties testing, leads the Government to establish a baseline. This baseline includes considerations for fabrication of test samples, methods to employ launch conditions, and use of specific test practices in addition to specifics for test sample configurations.



Source: https://assist.dla.mil -- Downloaded: 2016-12-31T21:01Z
Check the source to verify that this is the current version before use.

6.2 Origin of word mold/mould. Mould comes from the Norse word “mowlds” for fuzzy. Mold comes from the French word “molde” for form or shape.

6.3 USDA point of contact. Curator of the Aspergillus and Penicillium collection at the USDA Microbial Genomics and Bioprocessing Research Unit is Dr. Stephen Peterson (peterssw@mail.ncaur.usda.gov).

6.4 Requirement. Unless otherwise specified, the fungus requirement in which a fiber optic component must meet should be stated as follows: “Polymeric cable materials will show sparse or very restricted microbial growth and reproduction with minor or inhibited substrate utilization. There will be little or no chemical, physical, or structural change detectable.”

6.5 Health considerations.

6.5.1 Personnel protective equipment. Appropriate personal protective equipment (PPE) must be worn while handling fungus cultures and chemical disinfectant solutions. If ventilation hood with HEPA (high efficiency particulate air) filters (or other suitable airway protection) is not available during spore suspension and test sample inoculation, inspection personnel, at a minimum, should wear goggles and a M95 protective mask (or one sufficient to filter spore particles and bacteria).

6.5.2 Hazards. Refer to safety documentation for specific fungus hazards and Material Safety Data Sheets (MSDS) for chemical hazards.



Source: https://assist.dla.mil -- Downloaded: 2016-12-31T21:01Z
Check the source to verify that this is the current version before use.

MEASUREMENT 3401.1

APPENDIX A

Minimum Essential Checklist for Fungus Resistance Measurements

A.1 Purpose. This appendix addresses a checklist of the minimum essentials for the fungus resistance measurement.

A.2 Usage. Table 3401A-I is the checklist of minimum essentials for Government auditors, or their representatives, use during inspections. This checklist should be expanded at the auditor's discretion.

TABLE 3401A-I. Minimum Essential Checklist for Fungus Resistance Measurements.

| Item | Category | Item | Requirement | Compliance |
|---|---|---|---|---|
| 1 | Test criteria | Test duration (incubation) | 28 days, unless otherwise specified | |
| | | Test temperature | 86 ± 2 °F (30 ± 1 °C) | |
| | | Test relative humidity | Percent RH > 90 to < 100 | |
| | | Fungi types | Only Aspergillus flavus, Aspergillus niger, Aspergillus versicolor, Chaetomium globosum, Penicillium funiculosum | |
| 2 | Culture stock | Approved sources | USDA, ATCC (see 4.2.1) | |
| | | Replenishment interval | Stock kept 4 months or less if not actively grown (grow subcultures)<br>Stock kept 4 years or less if actively grown<br>Each subculture not kept > 4 months<br>Each subculture kept at 43 ± 7 °F (6 ± 4 °C) | |
| 3 | Test sample preparation | Samples with internal components exposed during install or use | Internal components exposed and tested. | |
| | | Samples with multiple materials that differ for each configuration. | Components tested include materials different in each configuration. | |
| 4 | Pre-test decontami-nation | Test sample | Decontamination solvent/agent: > 99% pure isopropyl alcohol<br>Timeframe: ≥ 72 hr. before start of test | |
| | | Take appropriate handling measures | Gloves, goggles, protective filter mask | |
| | | Chamber interior | Wipe out, heat to ≥ 140 °F (60 °C) ≥ 2 hr., cool | |
| | | Containers, pans | Same as chamber interior or autoclave at ≥ 250 °F (121 °C) at 15 psi (0.103 MPa). For ≥ 20 min. | |



Source: https://assist.dla.mil -- Downloaded: 2016-12-31T21:01Z
Check the source to verify that this is the current version before use.

TABLE 3401A-I. Minimum Essential Checklist for Fungus Resistance Measurements - Continued.

| Item | Category | Item | Requirement | Compliance |
|---|---|---|---|---|
| 4 | Pre-test decontamination | Glassware/containment apparatus to prepare the fungus suspension, nutrient solution and test sample containers (with nutrient solution and one of five fungi suspensions) | Autoclave at ≥ 250 °F (121 °C) at 15 psi (0.103 MPa). For ≥ 20 min. | |
| | | Purity of water and chemicals | Water: distilled or of equal purity. Chemicals: reagent grade (see 4.4.4) | |
| 5 | Test equipment | | | |
| | Environmental chamber charts | Temperature profile recorded | Chart, stored data on disk, other approved means | |
| | | | Includes chamber model and serial, date of test | |
| | | | Humidity sensing device accuracy is at least ± 3 percent RH over test humidity. Solid state sensing device used. | |
| | | | Temperature sensing device accuracy is at least ±1 °C over test temperature | |
| | Environmental chamber | Humidity limits | Exceeds minimum and maximum humidity limits on profile, 50 to 98 RH. | |
| | | Temperature limits | Exceeds minimum and maximum temperature limits on profile, 82 °F (28 °C) to 140 °F (60 °C) | |
| | | Programmable to perform cycles show in table 1 or as specified | Chart/printout shows correct humidity and temperatures with times | |
| | Sample location in chamber | If in air flow stream | Install deflectors or screens | |
| | | Relative to source of humidity entrance | No stream injected directly in portion of chamber interior that can directly affect sample | |
| 6 | Culture stocks | Each culture Maintained separately | Appropriate medium, such as potato dextrose agar. See 4.5.2 for chaetomium globosum. | |
| | | Spore suspension preparation | Note that last step is blended spore suspension. | |
| | | Spore suspension concentration | Use counting chamber or haemocytometer (see 4.5.4) to verify concentration. | |



Source: https://assist.dla.mil -- Downloaded: 2016-12-31T21:01Z
Check the source to verify that this is the current version before use.

TABLE 3401A-I. Minimum Essential Checklist for Fungus Resistance Measurements - Continued.

| Item | Category | Item | Requirement | Compliance |
|---|---|---|---|---|
| 7 | Positive controls and inoculations | Positive control for stock purity | Inoculate sterile potato dextrose or other nutrient agar plates with .2 to .3 ml spore suspension – each fungus for 7 to 10 days (see 4.5.5) | |
| | | Positive control during testing. | Use of cotton control strips (see 4.5.6) | |
| | | | Place on suitable fixtures or suspend (see 4.5.7) | |
| | | | Ensure adequate air flow around test samples | |
| | | | Inspect control strip after 7 and after 28 days | |
| | | Test sample inoculation | Use blended spore suspension with atomizer/nebulizer. | |
| | | | Do all external and exposed internal surfaces | |
| | | | Non-wetted surfaces sprayed until drops begin to form | |
| 8 | Post-test decontami-nation | Decontamination of test samples | Heated, washed in disinfectant, placed in labeled bag (see 4.6.1) | |
| | | | Alternative is autoclave (see 4.6.1) | |
| | | Decontaminate test apparatus | Includes chamber, pans | |
| | | | Heated, washed with solution, flush with water (see 4.6.2) | |
| | | | Alternative for glassware/containment apparatus is autoclave (see 4.6.2) | |
| 9 | Data sheet | Fungus test evaluation criteria | Rating criteria: grade, supporting description, percentage of surface with microbial growth | |
| | | Mold identification | Visual inspection: identify by texture and color | |
| | | | Microscope inspection: identify by hyphae (interwoven filaments) and conidia (spores or rounded forms at ends of some hyphae) – mostly spores remain in blended spore suspension | |
| | | Approved data sheet | Compliance with Measurement 2201 | |
| | | Added data sheet requirement | Grade | |
| | | | Supporting description | |
| | | | Percentage of surface with microbial growth | |
| 9 | Data sheet | Added data sheet requirement | Test (incubation) duration | |
| | | | Means of mold identification | |
| | | | Results of positive controls during testing | |
| 10 | Pass/fail criteria | Proper criteria implemented | Test operators knows if fail and to verify result | |

MEASUREMENT 3401.1



Source: https://assist.dla.mil -- Downloaded: 2016-12-31T21:01Z
Check the source to verify that this is the current version before use.

A.3 Notes.

A.3.1 Intended use.

A.3.1.1 Audit team. This checklist is intended to assist Government auditors or their representatives during inspections of the optical measurement system. This checklist may be augmented at the auditor's discretion; however, it is not to be reduced.

A.3.1.2 Test laboratories. When test laboratories prepare to perform fungus resistance measurements or audits, this checklist should be used to supplement Measurement 3401.1, not replace it.



Source: https://assist.dla.mil -- Downloaded: 2016-12-31T21:01Z
Check the source to verify that this is the current version before use.

APPENDIX B

Fungus Resistance Sample Data Sheet # 1

Sample data sheet to illustrate configuration of one test sample that is comprised of multiple components.

DATE: _____ REVIEWED BY: _____
ITEM CODE: _____ APPROVED BY:_____

ITEM DESCRIPTION: ___Fiber Optic Cable – Test Sample # 1___

| COMPONENT | GRADE | % AREA | PASS/FAIL |
|---|---|---|---|
| Outer jacket (multiple fiber cable) | | | |
| Kevlar (aramid yarn) | | | |
| Water Blocking Material | | | |
| Central strength member | | | |
| OFCC (jacket on single fiber cable) | | | |
| 900 micron buffer | | | |
| | | | |
| | | | |
| | | | |

Grade:

0 = None. Surface (substrate) is devoid of microbial growth.
1 = Trace. Scattered, sparse or very restricted microbial growth is observed. Appearance on surface is minor or inhibited.
2 = Slight (light). Intermittent infestations or loosely spread microbial colonies on surface/moderate growth.
3 & 4 = Moderate (medium) and Severe (heavy), respectively, exhibit chemical, physical or structural change on surface, whereas grades 0, 1 and 2 do not for rating purpose.
(3 = Substantial growth. Surface exhibiting chemical, physical or structural change, 4 = Massive growth. Surface decomposed or rapidly deteriorating.)

Specific details of growth:

P = Patchy growth.
S = Spotty microbial growth (colonization or infestation).
U = Uniform growth over the specified percentage of surface area(s), where at least one area exceeds 20 percent of the surface.

Grade column entry. Entry made under the column for “Grade” includes both the grade and specific details of growth (for example, “1P”).” Alternative is to place a separate column on data sheet, between “Grade” and % Area” for Specific Details of Growth

SAMPLE



Source: https://assist.dla.mil -- Downloaded: 2016-12-31T21:01Z
Check the source to verify that this is the current version before use.

APPENDIX B

Fungus Resistance Sample Data Sheet # 2

Sample data sheet to illustrate configuration of one test sample comprised of components that have multiple configurations. The components for each configuration are tested.

DATE: _____ REVIEWED BY: _____
ITEM CODE: _____ APPROVED BY: _____

COMPONENT: _____Fiber Optic Connector_____

| Component | Sample 1 | | | Sample 2 | | | Sample 3 | | |
|---|---|---|---|---|---|---|---|---|---|
| | Grade | % Area | P/F | Grade | % Area | P/F | Grade | % Area | P/F |
| Boot, black | | | | | | | | | |
| Plastic boot insert | | | | | | | | | |
| Boot, blue | | | | | | | | | |
| Plastic boot insert | | | | | | | | | |
| Dust cover, blue | | | | | | | | | |
| Dust cover, black | | | | | | | | | |
| Adapter end cap, blue | | | | | | | | | |
| Adapter end cap, black | | | | | | | | | |

Grade:

0 = None. Surface (substrate) is devoid of microbial growth.
1 = Trace - Scattered, sparse or very restricted microbial growth is observed. Appearance on surface is minor or inhibited.
2 = Slight (light). Intermittent infestations or loosely spread microbial colonies on surface/moderate growth.
3 & 4 = Moderate (medium) and Severe (heavy), respectively, exhibit chemical, physical or structural change on surface, whereas grades 0, 1 and 2 do not for rating purpose.
(3 = Substantial growth. Surface exhibiting chemical, physical or structural change, 4 = Massive growth. Surface decomposed or rapidly deteriorating.)

Specific details of growth:

P = Patchy growth.
S = Spotty microbial growth (colonization or infestation).
U = Uniform growth over the specified percentage of surface area(s), where at least one area exceeds 20 percent of the surface.

SAMPLE

MEASUREMENT 3401.1



Source: https://assist.dla.mil -- Downloaded: 2016-12-31T21:01Z
Check the source to verify that this is the current version before use.

Grade column entry. Entry made under the column for “Grade” includes both the grade and specific details of growth (for example, “1P”).” Alternative is to place a separate column on data sheet, between “Grade” and % Area” for Specific Details of Growth



Source: https://assist.dla.mil -- Downloaded: 2016-12-31T21:01Z
Check the source to verify that this is the current version before use.

MEASUREMENT 3402.1

SALT SPRAY

1. Purpose. This measurement is intended to provide further direction and consistency for simulating a corrosive atmosphere in accordance with TIA-455-16. Specifically, this measurement simulates a DUT assembly being introduced into a salt air environment. No correlation is made between test conditions and exposure time in any natural environment. To ensure that the risk to the Government of accepting bad measurement data is low, to minimize test variations and to permit more accurate comparison of test results from multiple sources, a "standardized" approach is specified to perform this measurement.

2. Applicable documents.

2.1 General. The documents listed in this section are specified in sections 3, 4, and 5 of this standard practice. This section does not include documents cited in other sections of this standard practice or recommended for additional information or as examples. While every effort has been made to ensure the completeness of this list, document users are cautioned that they must meet all specified requirements of documents cited in sections 3, 4, and 5 of this standard practice, whether or not they are listed.

2.2 Non-Government publications. The following documents form a part of this document to the extent specified herein. Unless otherwise specified, the issues of these documents are those cited in the solicitation or contract.

ASTM INTERNATIONAL

ASTM B 117 - Standard Practice for Operating Salt Spray (Fog) Apparatus.
ASTM E 70 - Standard Test Method for PH of Aqueous Solutions with the Glass Electrode.

(Copies of these documents are available online at http://www.astm.org or from the ASTM International, 100 Barr Harbor Drive, P. O. Box C700, West Conshohocken, PA 19428-2959.)

TELECOMMUNICATIONS INDUSTRY ASSOCIATION

TIA-455-16 - Fiber Optic Components, Salt Spray (Corrosion), Test for.

(Copies are available online at www.tiaonline.org or from Telecommunications Industry Association (TIA), 2500 Wilson Boulevard, Suite 300, Arlington VA 22201.)

2.3 Order of precedence. Unless otherwise noted herein or in the contract, in the event of a conflict between the text of this document and the references cited herein, the text of this document takes precedence. Nothing in this document, however, supersedes applicable laws and regulations unless a specific exemption has been obtained.

3. Definitions.

3.1 Salt spray measurement. Measurement that provides a controlled setting that replicates exposure to climatic conditions in a salt air atmosphere for obtaining a relative measure of the corrosion resistance to this type environment.



Source: https://assist.dla.mil -- Downloaded: 2016-12-31T21:01Z
Check the source to verify that this is the current version before use.

4. Setup. Measurement 3402 shall be conducted in accordance with the setup specified in TIA-455-16 with the restrictions specified in 4.1 through 4.5.

4.1 Test sample test preparation. Clean the test samples with reagent grade (> 99 percent pure) isopropyl alcohol prior to the test.

4.2 Placement of DUT assemblies in chamber.

a. Suspend DUT assemblies. Each DUT assembly shall be suspended in the chamber such that no test sample supports or other DUT assemblies are above to drip onto or otherwise cause salt water to collect on another DUT assembly.

b. Position or suspension of each DUT shall be performed so that axial direction is about 15 degrees (range from 6° to 45° is acceptable) from the vertical surface and parallel to the principal direction of the horizontal flow through the chamber.

c. Position of each DUT assembly shall ensure uniform exposure.

d. Suspension wires used shall be wax coated string or other moisture-impervious, non-metallic material.

4.3 Pre-test visual inspection. Perform a pre-test visual inspection. Check for surface corrosion effects; for any cracks, scratches or other degradation in the protective coating; and for any other type damage. Observations recorded shall include any corrosive effects, any degradation in the protective coating seen on the external parts, and any damage which would be detrimental to the operation of the DUT assembly (including mechanical mating) or that may facilitate the onset of corrosion.

4.3.1 Penetration. No salt penetration into sealed areas.

4.3.2 Corrosion. No corrosive effects on external parts that would be detrimental to the operation. These corrosive effects include, but are not limited to, those specified in 4.3.2a through 4.3.2c.

a. Exposure of base metals, pitting, and porosity of finishes.

b. Cracking or delamination of components or finishes.

c. Abnormal nicks, cracks, or scratches on finished surfaces that indicate the removal of any normal protective coating.

4.4 Test instrumentation. Verify test instrumentation complies with 4.4a through 4.4e.

a. Thermometer or temperature measuring system shall be calibrated and be accurate to ±0.5°C (±1°F).

b. Pressure gauge or pressure measuring system shall be calibrated and be accurate to ±6.89 kPa (±1 psi).

c. Graduated cylinders, funnels or other collection container to capture and measure salt fog concentration. Preference is to use a funnel, dish or other collection container that has a diameter of 10 cm (3.94 in) since this horizontal collection area is about 80 $cm^2$ (12.4 $in^2$).



Source: https://assist.dla.mil -- Downloaded: 2016-12-31T21:01Z
Check the source to verify that this is the current version before use.

d. Specific gravity hygrometer that can measure the specific gravity between 1.0255 and 1.0400 at a fluid temperature of 25°C (77°F).

e. Unless otherwise specified by the qualifying activity, electrometric measurement of pH shall be conducted using a saturated potassium chloride bridge in accordance with ASTM E70.

4.5 Salt solution preparation. Prepare the salt solution as specified in 8.1 of ASTM B117 ensuring proper pH (see 8.2 of ASTM B117).

a. Salt solution shall consist of a 5 percent salt (NaCl) concentration (5 ±1 parts of salt by weight).

b. Salt solution parameters shall be measured at a 35°C (95°F) exposure temperature.

c. Salt solution shall contain a pH between 6.5 and 7.2 when measured in accordance with 4.5.2.

5. Test procedure. Measurement 3402 shall be conducted in accordance with the processes specified in TIA-455-16 with the restrictions specified in 5.1 through 5.4.

5.1 Summary. Operate the salt spray (fog) chamber with a constant salt spray for the specified exposure time (see 6.4).

5.1.1 Test duration. Exposure period shall be as specified in the component military specification (see 6.3).

5.1.2 Salt spray measurement intervals. Measure the salt spray (fog) fallout rate at intervals of every 24 hours.

5.1.2.1 Check pH. Ensure fallout has a pH between 6.5 to 7.2.

5.1.2.2 Check fallout rate. Ensure that for each 80 $cm^2$ (12.4 $in^2$) of horizontal collection area in the chamber, there will be between 1 to 2 milliliters of salt solution collected per hour.

5.1.3 Test sample removal. After the exposure period, test samples shall be removed from the chamber.

5.2 Posttest cleaning of test samples.

5.2.1 Cleaning. Clean test samples by gently washing or dipping in running tap water (not warmer than 38°C (100°F) for at least 5 minutes.

5.2.2 Drying. Dry immediately with a stream of clean, dry compressed air or inert gas.

5.3 Posttest visual inspection. Once cleaned and dried, the DUT assemblies shall be examined under three-power magnification. Inspect for both characteristics listed in 5.3.1 and 5.3.2.

5.3.1 Interior penetration. Check for salt penetration into the DUT assembly interior; especially passed any openings, gaskets, or seals, and threaded connections. There shall be no salt penetration into sealed areas.



Source: https://assist.dla.mil -- Downloaded: 2016-12-31T21:01Z
Check the source to verify that this is the current version before use.

5.3.2 Corrosive effects. Check for surface corrosion effects or protective coating degradation and for damage to external parts. Observations recorded shall include any corrosive effects seen on the external parts which would be detrimental to the operation of the DUT assembly (including mechanical mating). These corrosive effects include, but are not limited to those specified in 5.3.2a through 5.3.2d.

a. Exposure of base metals, pitting and porosity of finishes.

b. Cracking or de-lamination of components or finishes.

c. Abnormal nicks, cracks, or scratches on finished surfaces that indicate the removal of any normal protective coating.

d. No corrosive effects on external surfaces that would be detrimental to component operation. For instance, on a fiber optic connector, any flaking or other corrosive effects that can migrate or otherwise make its way to the ferrule end face(s) is detrimental to the operation of the connector.

5.3.3 Mechanical impairment. These mechanical impairments due to salt deposits include, but are not limited to, those specified in 5.3.3a and 5.3.3b below.

a. Clogging, binding of moving parts, interference of mating parts and degraded performance to mechanical components and assemblies.

b. Compromise of the sealing surfaces on doors, lids, hatches, and other coverings to which any flaking or other corrosive effects can migrate or otherwise make its way to the sealing surface.

5.3.4 Electrical impairment. These electrical impairments due to salt deposits include, but are not limited to, those specified in 5.3.4a through 5.3.4c.

a. Conductive bridges or paths created as a result of salt deposits.

b. Corrosion of metallic electrical components and corrosion or otherwise degrading of the insulating materials.

c. Electrical safety hazards and performance anomalies resulting from 5.3.4a and 5.3.4b.

5.3.5 Optical degradation. Corrosive effects that may cause scratching or shattering of the optical fiber, at the ferrule end face, is covered under 5.3.2d. Unacceptable drop in the optical power level resulting in potential optical signal degradation (optical degradation) is determined by posttest insertion loss verification. When specified, no optical degradation shall occur as a result of the salt spray test.

5.4 Data sheet. In addition to the items for the standard data sheet listed in MIL-STD-1678-2, measurement 2201, the data sheet is to list the items in 5.4a through 5.4.f.

a. Salt solution composition. Specify type of salt and water used in preparation of salt solution.

b. Specify in a table, the volume of salt solution collected in milliliters per hour for a horizontal collection area of 80 $cm^2$ (12.4 $in^2$).



Source: https://assist.dla.mil -- Downloaded: 2016-12-31T21:01Z
Check the source to verify that this is the current version before use.

c. Specific gravity. Specify in a table, the daily concentration or specific gravity at 35°C (95°F) for the salt solution collected.

d. pH. Specify in a table, the pH for the salt solution collected.

e. Test duration. Specify the exposure time with any interruption. For any interruption, include its cause and duration.

f. Visual inspections. Specify in a table the parameters and findings for the pre-test and the posttest visual inspections.

6. Notes.

6.1 Intents behind standardization efforts.

6.1.1 Multiple party testing considerations. The incentive to minimize test variables, resulting in a level playing field for multiple parties testing, leads the Government to establish a baseline. This baseline includes considerations for fabrication of test samples, methods to employ launch conditions and use of specific test practices in addition to specifics for test sample configurations.

6.2 Relevance of doing separate salt spray test. There is no direct correlation between measurement 3402, for salt spray (in accordance with ASTM B117) and measurement 3403, for modified $SO_2$/salt spray (fog - in accordance with annex 4 of ASTM G85). Some coatings may do well in a salt environment but not the SO2/salt spray (fog) atmosphere. It may still be appropriate to do both tests. Usually, if the test sample does well in an accelerated test, it will perform well in a similar type environment.

6.3 Test duration. Two different exposure periods or test durations are specified usually for fiber optic components. A test duration of 96 hours is specified for fiber optic components used exclusively inside enclosures. A test duration of 500 hours is specified for fiber optic components exposed to the outside (natural) environment (or atmosphere).

6.4 Equivalency. Parameters specified in TIA-455-16 are equivalent to MIL-STD-202, method 101.



Source: https://assist.dla.mil -- Downloaded: 2016-12-31T21:01Z
Check the source to verify that this is the current version before use.

MEASUREMENT 3403

MODIFIED $SO_2$/SALT SPRAY

1. Purpose. This measurement is intended to provide further direction and consistency for simulating a corrosive atmosphere in accordance with ASTM G85. Specifically, this measurement simulates a pollutant/combustion product (sulfur dioxide or $SO_2$) periodically being introduced into a salt air environment. No correlation is made between test conditions and exposure time in any natural environment. To ensure that the risk to the Government of accepting bad measurement data is low, to minimize test variations and to permit more accurate comparison of test results from multiple sources, a "standardized" approach is specified to perform this measurement.

2. Applicable documents.

2.1 General. The documents listed in this section are specified in sections 3, 4, and 5 of this standard practice. This section does not include documents cited in other sections of this standard practice or recommended for additional information or as examples. While every effort has been made to ensure the completeness of this list, document users are cautioned that they must meet all specified requirements of documents cited in sections 3, 4, and 5 of this standard practice, whether or not they are listed.

2.2 Non-Government publications. The following documents form a part of this document to the extent specified herein. Unless otherwise specified, the issues of these documents are those cited in the solicitation or contract.

ASTM INTERNATIONAL

| | | |
|---|---|---|
| ASTM B117 | - | Salt Spray (Fog) Apparatus, Operating. |
| ASTM E70 | - | Standard Test Method for PH of Aqueous Solutions with the Glass Electrode. |
| ASTM G85 | - | Salt Spray (Fog) Testing, Modified. |

Copies of these documents are available online at http://www.astm.org or from ASTM International, 100 Barr Harbor Drive, P. O. Box C700, West Conshohocken, PA 19428-2959.)

2.3 Order of precedence. Unless otherwise noted herein or in the contract, in the event of a conflict between the text of this document and the references cited herein, the text of this document takes precedence. Nothing in this document, however, supersedes applicable laws and regulations unless a specific exemption has been obtained.

3. Definitions.

3.1 Modified $SO_2$/Salt spray measurement. Measurement that provides a controlled setting that replicates exposure to climatic conditions for a pollutant in a salt air atmosphere. This measurement obtains a relative measure of the corrosion resistance to this type environment.

4. Setup. Measurement 3403 shall be conducted in accordance with the setup specified in ASTM G85 with the restrictions specified in 4.1 through 4.6.

4.1 Test sample test preparation. Clean the test samples with reagent grade (> 99 percent pure) isopropyl alcohol prior to the test. Prepare the salt solution as specified in 8.1 of ASTM B117 ensuring proper pH (see 8.2 of ASTM B117).

4.2 Placement of DUT assemblies in chamber.

a. Suspend DUT assemblies. Each DUT assembly shall be suspended in the chamber such that no test sample supports or other DUT assemblies are above to drip onto or otherwise cause salt water to collect on another DUT assembly.



Source: https://assist.dla.mil -- Downloaded: 2016-12-31T21:01Z
Check the source to verify that this is the current version before use.

b. Position or suspension of each DUT shall be performed so that axial direction is about 15 degrees (range from 6° to 45° is acceptable) from the vertical surface and parallel to the principal direction of the horizontal flow through the chamber.

c. Position of each DUT assembly shall ensure uniform exposure.

d. Suspension wires used shall be wax coated string or other moisture-impervious, non-metallic material.

4.3 Pre-test visual inspection. Perform a pre-test visual inspection. Check for surface corrosion effects; for any cracks, scratches, or other degradation in the protective coating; and for any other type damage. Observations recorded shall include any corrosive effects, any degradation in the protective coating seen on the external parts, and any damage which would be detrimental to the operation of the DUT assembly (including mechanical mating) or that may facilitate the onset of corrosion.

4.3.1 Penetration. No salt penetration into sealed areas.

4.3.2 Corrosion. No corrosive effects on external parts that would be detrimental to the operation. These corrosive effects include, but are not limited to, those specified in 4.3.2a through 4.3.2c.

a. Exposure of base metals, pitting, and porosity of finishes.

b. Cracking or delamination of components or finishes.

c. Abnormal nicks, cracks or scratches on finished surfaces that indicate the removal of any normal protective coating.

4.4 Test instrumentation. Verify test instrumentation complies with 4.4a through 4.4f.

a. Thermometer or temperature measuring system shall be calibrated and be accurate to ±0.5°C (±1°F).

b. Pressure gauge or pressure measuring system shall be calibrated and be accurate to ± 6.89 kPa (±1 psi).

c. Graduated cylinders, funnels, or other collection container to capture and measure salt fog concentration. Preference is to use a funnel, dish, or other collection container that has a diameter of 10 cm (3.94 in) since this horizontal collection area is about 80 $cm^2$ (12.4 $in^2$).

d. Specific gravity hygrometer that can measure the specific gravity between 1.0255 and 1.0400 at a fluid temperature of 25°C (77°F).

e. Unless an allowance is granted by the qualifying activity, electrometric measurement of pH shall be conducted using a glass electrode with a saturated potassium chloride bridge in accordance with ASTM E70.

f. Flow meter and timer to regulate $SO_2$ gas introduced into the chamber.

4.5 Salt solution preparation. Prepare the salt solution as specified in 8.1 of ASTM B117 ensuring proper pH (see 8.2 of ASTM B117).

a. Salt solution shall consist of a 5 percent salt (NaCl) concentration (5 ±1 parts of salt by weight).

b. Salt solution parameters shall be measured at a 35°C (95°F) exposure temperature.

c. Salt solution shall contain a pH between 6.5 and 7.2 when first prepared then measured in accordance with 4.5b.



Source: https://assist.dla.mil -- Downloaded: 2016-12-31T21:01Z
Check the source to verify that this is the current version before use.

4.6 Purity of gas cylinder. Purity shall be greater than 99 percent of $SO_2$ gas in cylinder.

5. Test procedure. Measurement 3403 shall be conducted in accordance with the processes specified in ASTM G85 with the inclusion of Annex A4 and with the restrictions specified in 5.1 through 5.5.

5.1 Summary. Operate the modified $SO_2$/salt spray (fog) chamber with a constant salt spray introducing $SO_2$ gas for 1 hour four times a day (every 6 hours in accordance with A.4.4.4.1 of ASTM G85).

5.1.1 Test duration. Exposure period shall be 336 hours.

5.1.2 Gas flow rate. Introduce the $SO_2$ gas at a flow rate of 1 cubic centimeter per minute per cubic foot ($cm^3$/min-$ft^3$) (35 cubic centimeters per minute per cubic meter ($cm^3$/min-$m^3$)) of cabinet volume.

5.1.3 Gas flow dispersion uniformity. A method shall be used that ensures uniform dispersion throughout the chamber interior (such as gas dispersion ring).

5.1.4 Salt spray measurement intervals. Measure the salt spray (fog) fallout rate at intervals of every 24 hours and ensure fallout has specified pH (2.5 to 3.2) and a rate of 1 to 3 ml/80$cm^2$/hr.

5.1.5 Test sample removal. After the exposure period, test samples shall be removed from the chamber.

5.2 Posttest cleaning of test samples.

5.2.1 Cleaning. Clean test samples by gently washing or dipping in running tap water (not warmer than 38°C (100°F)) for at least 5 minutes.

5.2.2 Drying. Dry immediately with a stream of clean, dry compressed air or inert gas.

5.3 Posttest visual inspection. Once cleaned and dried, the DUT assemblies shall be examined under three-power magnification. Inspect for both characteristics listed in 5.3.1 and 5.3.2.

5.3.1 Interior penetration. Check for modified $SO_2$/salt penetration into the DUT assembly interior; especially pass any openings, gaskets, or seals, and threaded connections.

5.3.2 Corrosive effects. Check for surface corrosion effects or protective coating degradation and for damage to external parts. Observations recorded shall include any corrosive effects seen on the external parts which would be detrimental to the operation of the DUT assembly (including mechanical mating).

5.4 Data sheet. In addition to the items for the standard data sheet listed in MIL-STD-1678-2 measurement 2201, the data sheet is to list the items in 5.4.1 through 5.4.6.

5.4.1 Salt solution composition. Specify type of salt and water used in preparation of salt solution.

5.4.2 Specifications. Specify in a table, the daily volume of salt solution collected in milliliters per hour for a horizontal collection area of 80 $cm^2$ (12.4 $in^2$).

5.4.3 Specific gravity. Specify in a table, the daily concentration or specific gravity at 35°C (95°F) for the salt solution collected.

5.4.4 pH. Specify in a table, the daily pH for the salt solution collected.

5.4.5 Test duration. Specify the exposure time with any interruption. For any interruption, include its cause and duration.



Source: https://assist.dla.mil -- Downloaded: 2016-12-31T21:01Z
Check the source to verify that this is the current version before use.

5.4.6 Visual inspections. Specify in a table the parameters and findings for the pre-test and the posttest visual inspections.

5.5 Safety. Adequate safety measures must be taken during this test.

5.5.1 Measurement and dispersion periods shall not coincide. Fallout rate measurements and otherwise opening of the chamber shall not occur during an $SO_2$ cycle (dispersion period).

5.5.2 Sufficient exhaust time prior to opening. Once the chamber is opened, sufficient time must be allotted for exhaust hood or other means of ventilation to remove the $SO_2$ atmosphere prior to exposure to the chamber interior.

6. Notes.

6.1 Intents behind standardization efforts.

6.1.1 Multiple party testing considerations. The incentive to minimize test variables, resulting in a level playing field for multiple parties testing, leads the Government to establish a baseline. This baseline includes considerations for fabrication of test samples, methods to employ launch conditions, and use of specific test practices in addition to specifics for test sample configurations.

6.2 Relevance of doing separate salt spray test. There is no direct correlation between measurement 3402, for salt spray (in accordance with ASTM B117) and measurement 3403, for modified $SO_2$/salt spray (fog: in accordance with annex 4 of ASTM G85). Some coatings may do well in a salt environment but not the $SO_2$/salt spray (fog) atmosphere. It may still be appropriate to do both tests. Usually, if the test sample does well in an accelerated test, it will perform well in a similar type environment.



Source: https://assist.dla.mil -- Downloaded: 2016-12-31T21:01Z
Check the source to verify that this is the current version before use.

MEASUREMENT 3404

OZONE EXPOSURE

1. Purpose. This measurement is intended to provide further direction for equipment, setup, processes and evaluation criteria for ensuring that this measurement is done in a consistent manner. To ensure that the risk to the Government of accepting bad measurement data is low, to minimize test variations and to permit more accurate comparison of test results from multiple sources, a “standardized” approach is specified to perform this measurement.

2. Applicable documents.

2.1 General. The documents listed in this section are specified in sections 3, 4, and 5 of this standard practice. This section does not include documents cited in other sections of this standard practice or recommended for additional information or as examples. While every effort has been made to ensure the completeness of this list, document users are cautioned that they must meet all specified requirements of documents cited in sections 3, 4, and 5 of this standard practice, whether or not they are listed.

2.2 Non-Government publications. The following documents form a part of this document to the extent specified herein. Unless otherwise specified, the issues of these documents are those cited in the solicitation or contract.

ASTM INTERNATIONAL

ASTM D1149 - Standard Test Methods for Rubber Deterioration—Cracking in an Ozone Controlled Environment.

(Copies are available online at http://www.astm.org or from ASTM International, 100 Barr Harbor, P. O. Box C700, West Conshohocken, PA 19428-2959.)

TELECOMMUNICATIONS INDUSTRY ASSOCIATION

TIA-455-189 - Ozone Exposure Test for Fiber Optic Components.

(Copies are available online at www.tiaonline.org or from Telecommunications Industry Association (TIA), 2500 Wilson Boulevard, Suite 300, Arlington VA 22201.)

2.3 Order of precedence. Unless otherwise noted herein or in the contract, in the event of a conflict between the text of this document and the references cited herein, the text of this document takes precedence. Nothing in this document, however, supersedes applicable laws and regulations unless a specific exemption has been obtained.

3. Definitions.

3.1 Specimens. Polymeric material parts from the DUT.

4. Setup. Measurement 3404 shall be conducted in accordance with the setup specified TIA-455-189 with the restrictions specified in 4.1 through 4.4.

4.1 Test samples. Perform on polymeric parts only.

4.2 Specimen configuration during test. If polymeric part is expanded on the connector, then part is to be tested to the same level of expansion. Parts to be expanded will be provided on applicable mandrel size.

4.3 Sample size. Specimens tested shall consist of 3 of each polymeric part in the fiber optic component under test.



Source: https://assist.dla.mil -- Downloaded: 2016-12-31T21:01Z
Check the source to verify that this is the current version before use.

4.4 Test chamber sufficiency. Verification shall be provided that the ozone chamber is suitable for ozone exposure in accordance with TIA-455-189. Most ozone exposures measurements are performed at lower ozone concentrations for longer durations. Ozone exposure in accordance with TIA-455-189 is performed at higher ozone concentrations for shorter durations.

5. Test procedure. Measurement 3404 shall be conducted in accordance with the methodology specified TIA-455-189 with the restrictions for processes and evaluation criteria specified. Measurement processes shall include those summarized in 5.1 through 5.8. Requirements for pass/fail criteria shall include comparison of pre-test and posttest visual inspections to ensure seals shall show no evidence of excessive swelling or embrittlement which may degrade environmental isolation.

5.1 Perform pre-test visual inspection. Inspect each test sample under 3X to 5X minimum magnification for any damage, swelling, or embrittlement.

5.2 Perform pre-test dimensional and weight measurement. Dimensional and weigh inspections shall be performed on each polymeric test sample prior to testing unless otherwise specified.

5.3 Sample suspension. Suspend samples in the chamber so that there is a uniform distribution of the ozone concentration around the outer surface of each test sample.

5.4 Perform ozone test. Polymeric connector parts shall be tested in accordance with TIA-455-189 and exposed to an ozone concentration of 100 to 150 parts per million at a temperature of 70°C ±5°C (158°F ±13°F) for two hours. The air velocity in the exposure chamber during the test shall be not less than 0.6 m/sec. The ozone test apparatus and ozone measuring device shall be in accordance with ASTM D1149. If a polymeric connector part is expanded on the connector, then the part is to be tested at the same level of expansion.

5.5 Remove test samples after the 2 hour exposure.

5.6 Perform posttest visual examine. Visually inspect polymeric test samples under 3X to 5X minimum magnification for swelling, embrittlement or any damage.

5.7 Perform post-test dimensional and weight measurement. Dimensional and weigh inspections shall be performed on each polymeric test sample prior to testing unless otherwise specified. Weigh to include the calculation for weight change from pre-test values in percent.

5.8 Data sheet. Data sheet including the contents as specified in appendix A.

6. Notes.

6.1 Intents behind standardization efforts.

6.1.1 Multiple party testing considerations. The incentive to minimize test variables, resulting in a level playing field for multiple parties testing, leads the Government to establish a baseline. This baseline includes considerations for fabrication of test samples, methods to employ launch conditions and use of specific test practices in addition to specifics for test sample configurations.

6.2 Equivalency. TIA-455-189 is equivalent to EIA-364-14.



Source: https://assist.dla.mil -- Downloaded: 2016-12-31T21:01Z
Check the source to verify that this is the current version before use.

MEASUREMENT 3404

APPENDIX A

POST TEST EXAMINATION SAMPLE DATA SHEET FOR OZONE EXPOSURE

Sample:_____

Reference Number/Part:_____

1. Document the physical characteristics of the specimen as it appeared before test. Note characteristics to include those in the following categories.

| Pre-test characteristics | Yes | No | Area (%) |
|---|---|---|---|
| Broken or severed | | | |
| Pealing or flaking | | | |
| Discoloration | | | |
| Noticeable change in size | | | |
| Other (list type below) | | | |

2. Document pre-test size and weight.

Size (assumes specimen with diameter and thickness dimensions)

Diameter:_____

Thickness:_____

Weight:_____

3. Document the physical characteristics of the specimen as it appeared immediately after test is completed. Note characteristics to include those in the following categories.

| Posttest characteristics | Yes | No | Area (%) |
|---|---|---|---|
| Easily broken or snapped | | | |
| Pealing or flaking | | | |
| Color transfer | | | |
| Noticeably brittle | | | |
| Other (list type below) | | | |

4. Document posttest size and weight. Include change in sizes and weights.

Size (assumes specimen with diameter and thickness dimensions)

Diameter:_____ Change in diameter:_____

Thickness:_____ Change in thickness: _____

Weight:_____ Change in weight:_____



Source: https://assist.dla.mil -- Downloaded: 2016-12-31T21:01Z
Check the source to verify that this is the current version before use.

MEASUREMENT 3405

SMOKE GENERATION AND FLAME PROPAGATION

1. Purpose. This measurement is intended to provide further direction and consistency for smoke generation and flame propagation in accordance with the Steniner Tunnel Test as described in UL-910 (horizontal fire test chamber with a ladder type cable tray). To ensure that the risk to the Government of accepting bad measurement data is low, to minimize test variations and to permit more accurate comparison of test results from multiple sources, a "standardized" approach is specified to perform this measurement.

2. Applicable documents.

2.1 General. The documents listed in this section are specified in sections 3, 4, and 5 of this standard practice. This section does not include documents cited in other sections of this standard practice or recommended for additional information or as examples. While every effort has been made to ensure the completeness of this list, document users are cautioned that they must meet all specified requirements of documents cited in sections 3, 4, and 5 of this standard practice, whether or not they are listed.

2.2 Non-Government publications. The following documents form a part of this document to the extent specified herein. Unless otherwise specified, the issues of these documents are those cited in the solicitation or contract.

ASTM INTERNATIONAL

ASTM E84 - Standard Test Method for Surface Burning Characteristics of Building Materials.

(Copies of these documents are available online at http://www.astm.org or from ASTM International, 100 Barr Harbor Drive, P. O. Box C700, West Conshohocken, PA 19428-2959.)

NATIONAL FIRE PROTECTION ALLIANCE (NFPA)

NFPA 262 - Standard Method of Test for Flame Travel and Smoke of Wires and Cables for Use in Air-Handling Spaces.

(Copies are available online at http://www.nfpa.org/catalog/ or from National Fire Protection Association, 11 Tracy Drive, Avon, MA 02322.)

2.3 Order of precedence. Unless otherwise noted herein or in the contract, in the event of a conflict between the text of this document and the references cited herein, the text of this document takes precedence. Nothing in this document, however, supersedes applicable laws and regulations unless a specific exemption has been obtained.

3. Definitions.

3.1 Smoke. Products of combustion that become airborne and obscure or reduce light transmission.

4. Setup. Measurement 3405 shall be conducted in accordance with the setup specified in NFPA 262 with the restrictions specified in 4.1 through 4.4.

4.1 Test samples.

4.1.1 Length. 7.3 ±.15 m (24 ±0.5 feet) installed in a single layer of straight, parallel rows to fill the width of the tray without spaces between adjacent rows.



Source: https://assist.dla.mil -- Downloaded: 2016-12-31T21:01Z
Check the source to verify that this is the current version before use.

4.1.2 Diameter. A micrometer, vernier calipers or a diameter tape with an accuracy of 0.025 mm (.001 inch) minimum can be used. For rounded and for uniform cross sections, perform a minimum of five measurements over a 0.3 m (1 foot) length. The average of the five measurements is used as the diameter. For non-uniform cross sections with width to thickness ratio less than 2:1, take three measurements at wide points and three at narrow points. The diameter is the average of the six measurements. For non-uniform cross sections with width to thickness ratio greater than 2:1, use the width of the cable as the diameter. Take six measurements at six locations on a 0.3 m (1 foot). The diameter is the average of the six measurements.

4.2 Test apparatus verifications.

4.2.1 Apparatus dimensional suitability. Obtain documented evidence of test chamber compliance to dimensions, materials and construction specified in NFPA 262.

4.2.2 Standard insulated conductor test. Obtain documented evidence that the standard insulted conductor test was performed using the conductor specified and was found to be in compliance with the performance parameters listed in NFPA 262.

4.3 Chamber parameters. Establish chamber parameters (each test, perform the following to establish chamber parameters prior to testing).

4.3.1 Cement board test. Obtain documented evidence that cement board test was performed and was found to be in compliance with the temperature history of the thermocouple as shown in NFPA 262 or figure 7 of ASTM E84. Most significantly, this test is done to establish the methane (gas) flow rate and is to be done on a monthly basis or prior to performing the test. This test is cited in ASTM E84 to represent a zero index for the flame spread index. This test is use to plot the flame spread distance versus time relationship or a temperature versus time relationship.

4.3.2 Red oak flooring test. This test was done to set/verify chamber compliance with the time-absorption curve as shown in figure 6 of ASTM E84 and meets 7.8 and 7.9 of ASTM E84. This test is used to represent a 100 index. This test is used to plot the flame spread distance versus time relationship and the smoke density versus time relationship.

4.4 Test equipment calibration (setting up chamber parameters).

4.4.1 Calibrate smoke measurement system (monthly).

a Location: On exhaust duct at a point preceded by a 17 ±1 foot length of straight run.

b. Distance from light source to photocell is 160 cm ± 5.08 cm (63 inch ± 2 inch).

c. Photocell calibration. Use following optical density filters: 0.1, 0.2, 0.3, 0.4, 0.5, 0.6, 0.7, 0.8, 0.9, 1.0. Calculate the optical density (OD) from a measurement with each filter as follows: OD = log (Io/I) where Io = clear beam photoelectric signal, I = photoelectric signal with a neutral density filter.

d. Calibration limits. The calculated values for the OD for each filter shall be within ± 3 percent of the calculated neutral density values. The average deviation of all measurements shall be within ± 1 percent.

4.4.2 Calibrate air flow system and inlet static pressure (monthly).

4.4.2.1 Location. Gauge tap 38.1 cm (15 inch) downstream of air inlet shutter.

4.4.2.2 Verify static pressure stability. Open air dampener 4.82 mm (.19 inch) and establish a static pressure of 37 Pa (.15 inch of water column). Close air inlet. Verify increase to 93 Pa (.375 inch of water column) minimum and no downward trend that would indicate leakage.



Source: https://assist.dla.mil -- Downloaded: 2016-12-31T21:01Z
Check the source to verify that this is the current version before use.

4.4.2.3 Verify no particle leakage. Ignite a smoke bomb and induce a positive pressure. Observe for leakage of escaping smoke particles.

4.4.2.4 Inlet air supply. Temperature at 23°C ±3°C (73°F ±5°F) and relative humidity at 50 percent ±5 percent.

4.4.2.5 Air velocity measurement. Air velocity measurement shall be made at seven equal points along the width of the chamber and 7 m (23 feet) from the gas burner. The measurements are obtained using a thermal anemometer. The average velocity shall be 1.22 m/s ±0.025 m/s (240 ±5 ft./min). Observe the air inlet static pressure at this velocity. This pressure shall be maintained within ± 5 percent for all testing.

4.4.3 Temperature measurement (Type K thermocouple: Calibrate or replace every six months).

4.4.3.1 Locations: Twenty-three feet from centerline of gas burner and 25.4 mm (1 inch) below top surface, 3.96 m (13 feet) and 7.16 m (23.5 feet) downstream of gas burner and 3.18 mm (.125 inch) below floor surface.

4.4.4 Methane gas.

4.4.4.1 Verify a higher heating value. Methane gas shall be 1,000 ± 20 BTU (thermochemical) per cubic foot. Verification may be done with a gas calorimeter.

4.4.4.2 Gas consumption. A gas meter shall be calibrated and used to record gas consumption. The gas meter shall measure in increments of not more than 2.8 liters (0.1 $ft^3$).

4.4.5 Data acquisition.

4.4.5.1 Data collected and recorded.

a. Light attenuation from the smoke measurement.

b. Fire test chamber measurements.

4.4.5.2 Measurement intervals. Measure at intervals of 2 seconds or less.

4.4.6 Other.

4.4.6.1 Calibration for determining gas flow rate of chamber. Perform cement board test at intervals of one month or do prior to performing each smoke generation and flame propagation test.

5. Test procedure. Measurement 3405 shall be conducted in accordance with the processes specified in NFPA 262 with the restrictions specified in 5.1 through 5.3.

5.1 Summary.

a. Preheat chamber and allow to cool to 40.6°C (105°F).

b. Install the cable length in the cable tray.

c. Establish an airflow rate of 1.22m/s ± 0.025 m/s (240 ±5 feet/min) by calculating the average of seven measurements.

d. Verify that the smoke measurement system indicates zero optical density.

e. Ignite methane flame and start data acquisition system simultaneously. Record photocell output at a maximum interval of two seconds.



Source: https://assist.dla.mil -- Downloaded: 2016-12-31T21:01Z
Check the source to verify that this is the current version before use.

f. Verify that the methane flow meter is at the gas flow rate established during the cement board test setup.

g. Observe and record distance and time of maximum point of flame propagation at intervals of 150 mm (6 inches) as the distance beyond the 137 cm (4.5 feet) ignition burner flame.

h. Stop the test after 20 minutes. (ASTM E84 stops test after 10 minutes). The smoke and flame spread is to be monitored for the full 20 minutes. The pass/fail criteria for flame spread are at the 10 minute mark. If the lab shuts down the flame source during the test due to over-temperature concerns, smoke and temperature data recording should still continue for the full duration of 20 minutes. The Government will then evaluate the data on a case-by-case basis. This issue does not arise with all cables tested, only those from some vendors.

5.2 Calculations.

5.2.1 Peak optical density. Maximum optical density determined by using a three-point average of optical density values recorded during the test.

5.2.2 Average optical density. Average OD = $[DtS0.5(OD_{i+1} + OD_i)]/1200$ that is summed from I = 1 to I = N-1.

5.2.3 Graphs. Graphs for the flame spread versus time graph must be included in the report.

5.3 Rapid burn rates. Allowances for test duration truncation due to flame spread considerations are addressed in appendix B.

6. Notes.

6.1 Intents behind standardization efforts.

6.1.1 Multiple party testing considerations. The incentive to minimize test variables, resulting in a level playing field for multiple parties testing, leads the Government to establish a baseline. This baseline includes considerations for fabrication of test samples, methods to employ launch conditions and use of specific test practices in addition to specifics for test sample configurations.

6.2 Single fiber cabling. The smoke generation and flame propagation test is performed on multiple fiber cables that are contained in an outer jacket. For single fiber cables such as the M85045/16, M85045/27, M85045/29 cables, the flaming smoke generation in accordance with ASTM E662 is performed instead.

6.2.1 Background. This test is not listed in MIL-PRF-85045, but only specified in particular specifications sheets (such as M85045/16). This test applies only to the single fiber cables. Statements that tube ends are to be sealed with a non-flammable sealant are not appropriate for tight buffed, single fiber cables.

6.2.2 Test sample length. This test is to be performed on lengths of cable placed across the face of the sample holder. The size and configuration of the test specimen will conform to the 76 mm (3 inches) square specified in ASTM E662. See figure 4 of ASTM E662. The specimen will be constructed by laying 76 mm (3 inches) lengths of fiber bundles adjacent to one another to form a 76 mm (3 inches) strip. Wire or cable clamps may be used to permanently hold the fiber bundles in place; however, the exposed length must be 76 mm (3 inches). Longer fiber bundle lengths may be used if the top or bottom clamps are used and cover part of the fiber bundles.



Source: https://assist.dla.mil -- Downloaded: 2016-12-31T21:01Z
Check the source to verify that this is the current version before use.

APPENDIX A

MIL-PRF-85045 REQUIREMENTS

A.1 Purpose. This appendix provides in tabular format a listing of the maximum allowed values for insertion loss that are specified in various military fiber optic component specifications.

A.2. Applicable documents.

A.2.1 General. The documents listed in this section are specified in sections A.3 and A.4 of this appendix. This section does not include documents cited in other sections of this appendix or recommended for additional information or as examples. While every effort has been made to ensure the completeness of this list, document users are cautioned that they must meet all specified requirements of documents cited in sections A.3 and A.4 of this appendix, whether or not they are listed.

A.2.2 Government documents.

A.2.3 Non-Government publications. The following documents form a part of this document to the extent specified herein. Unless otherwise specified, the issues of these documents are those cited in the solicitation or contract.

ASTM INTERNATIONAL

ASTM E84 - Surface Burning Characteristics of Building Materials.

(Copies of these documents are available online at http://www.astm.org or from ASTM International, 100 Barr Harbor Drive, P. O. Box C700, West Conshohocken, PA 19428-2959.)

A.2.4 Order of precedence. Unless otherwise noted herein or in the contract, in the event of a conflict between the text of this document and the references cited herein, the text of this document takes precedence. Nothing in this document, however, supersedes applicable laws and regulations unless a specific exemption has been obtained.

A.3 Pass/fail criteria. The peak optical density and the average optical density of smoke produced shall be not greater than that specified for the column with the applicable cable type in table 3405A-I. In addition, the flame spread time product at the 10-minute point shall be not greater than 27.5 meters-minutes when calculated in accordance with ASTM E84. Tube ends of Blown Optical Fiber (BOF) tube cables shall be plugged with a non-flammable sealant to simulate end caps.

TABLE 3405A-I. Maximum allowed values for peak and average optical densities.

| Specification sheet | /13 | /15 | /17 | /18 | /19 | /20 | /25 | /26 | /28 |
|---|---|---|---|---|---|---|---|---|---|
| Peak optical density | 0.5 | 0.5 | 0.5 | 0.5 | 0.5 | 0.5 | 1.2 | 0.5 | 1.2 |
| Average optical density | 0.15 | 0.15 | 0.15 | 0.15 | 0.15 | 0.15 | 0.25 | 0.15 | 0.25 |

A.4 Intended use. Table 3405A-I provides pass/fail criteria to assist Government auditors, or their representatives, during documentation reviews (such as test procedures and test reports) and inspections. Revisions to the military specifications supersede any values found in table 3405A-I.



Source: https://assist.dla.mil -- Downloaded: 2016-12-31T21:01Z
Check the source to verify that this is the current version before use.

APPENDIX B

TEST DURATION TRUNCATION DUE TO FLAME SPREAD CONSIDERATIONS

B.1 Intended use. One of the desired cable properties is to be slow burning. The Government recognizes that not all vendors can currently formulate a cable that burns at a rate sufficiently slow as to not encroach into the smoke measurement section of the test chamber during the allotted test duration of 20 minutes. The long term goal is to have all vendors be able to provide cable with sufficiently slow burn rates. Again, it is iterated that this issue does not arise with all cables tested, only those from some vendors.

B.2. Applicable documents.

B.2.1 General. The documents listed in this section are specified in sections B.3 and B.4 of this appendix. This section does not include documents cited in other sections of this appendix or recommended for additional information or as examples. While every effort has been made to ensure the completeness of this list, document users are cautioned that they must meet all specified requirements of documents cited in sections B.3 and B.4 of this appendix, whether or not they are listed.

B.2.2 Non-Government publications. The following documents form a part of this document to the extent specified herein. Unless otherwise specified, the issues of these documents are those cited in the solicitation or contract.

NATIONAL FIRE PROTECTION ASSOCIATION (NFPA)

NFPA 262 - Standard Method of Test for Flame Travel and Smoke of Wires and Cables for Use in Air-Handling Spaces.

(Copies are available online at http://www.nfpa.org/catalog/ or from National Fire Protection Association, 11 Tracy Drive, Avon, MA 02322.)

B.2.3 Order of precedence. Unless otherwise noted herein or in the contract, in the event of a conflict between the text of this document and the references cited herein, the text of this document takes precedence. Nothing in this document, however, supersedes applicable laws and regulations unless a specific exemption has been obtained.

B.3 Preference. The preference is to perform the test for the specified 20 minutes. For cables with more rapid rates of burning, the following test alternatives are offered in the order of preference listed, to enable the test performed for the full duration.

B.3.1 Substitution of smoke measurement section. If the section of the chamber with smoke measurement hardware is determined to be at risk, an alternate section may be substituted for Navy shipboard cable testing. This alternate section must be constructed of the same dimensions, may include ports for suppressing the fire (adding fire suppressant), and must use the same smoke measurement apparatus as specified in NFPA 262. Also, a correlation in smoke measurement must be submitted between the normally used and substituted test section. This test alternative permits the testing to be done for the full duration of 20 minutes.

B.3.2 Truncate test dependent upon burn rate. The duration in which the test is to be truncated will depend upon the burn rate of the cable. Several runs (using different test samples) may need to be done to establish the point at which the test may be conducted with no danger to test equipment. Each succeeding test would be truncated after a longer duration. This test alternative truncates testing prior to the full duration of 20 minutes. Test truncation occurs due to cable flame continual propagation down the chamber tunnel after the burner flame has been removed. Fire suppressant is added to the chamber tunnel to extinguish the flame prior to the occurrence of chamber damage. Smoke and temperature data recording is truncated at the point fire suppressant is added. The Government will then evaluate the data on a case-by-case basis.



Source: https://assist.dla.mil -- Downloaded: 2016-12-31T21:01Z
Check the source to verify that this is the current version before use.

B.4 Premature shutdown of flame source. If the lab shuts down the flame source during the test due to over-temperature concerns, smoke and temperature data recording should still continue for the full duration of 20 minutes. The Government will then evaluate the data on a case-by-case basis.



Source: https://assist.dla.mil -- Downloaded: 2016-12-31T21:01Z
Check the source to verify that this is the current version before use.

MEASUREMENT 3406

FLAME EXTINGUISHING

1. Purpose. This measurement is intended to provide further direction and consistency for flame extinguishing in accordance with UL-1685 (a vertical tray flame test). Intent is for the cables to be self-extinguishing and not burn to the top of the tray. To ensure that the risk to the Government of accepting bad measurement data is low, to minimize test variations and to permit more accurate comparison of test results from multiple sources, a “standardized” approach is specified to perform this measurement.

2. Applicable documents.

2.1 General. The documents listed in this section are specified in sections 3, 4, and 5 of this standard practice. This section does not include documents cited in other sections of this standard practice or recommended for additional information or as examples. While every effort has been made to ensure the completeness of this list, document users are cautioned that they must meet all specified requirements of documents cited in sections 3, 4, and 5 of this standard practice, whether or not they are listed.

2.2 Non-Government publications. The following documents form a part of this document to the extent specified herein. Unless otherwise specified, the issues of these documents are those cited in the solicitation or contract.

ASTM INTERNATIONAL

ASTM D1835 - Standard Specification for Liquefied Petroleum (LP) Gases.

(Copies of these documents are available online at http://www.astm.org or from ASTM International, 100 Barr Harbor Drive, P. O. Box C700, West Conshohocken, PA 19428-2959.)

GAS PROCESSORS ASSOCIATION

GPA Standard 2140 - Liquefied Petroleum Gas Specifications and Test Methods

(Copies of these documents are available online at http://gpaglobal.org/doclib/ or from the Gas Processors Association, 6526 E. 60th Street, Tulsa, OK 74145.)

UNDERWRITERS LABORATORIES (UL)

UL 1685 - UL Standard for Safety Vertical-Tray Fire-Propagation and Smoke-Release Test for Electrical and Optical-Fiber Cables.

(Copies are available online at http://www.ul.com or from Underwriters Laboratories, Incorporated, 333 Pfingsten Road, Northbrook, IL 60062-2096.)

2.3 Order of precedence. Unless otherwise noted herein or in the contract, in the event of a conflict between the text of this document and the references cited herein, the text of this document takes precedence. Nothing in this document, however, supersedes applicable laws and regulations unless a specific exemption has been obtained.

3. Definitions.

3.1 Flame. The glowing hot zone of a gas that has just underwent combustion.

4. Setup. Measurement 3406 shall be conducted in accordance with the setup specified in UL 1685 with the restrictions specified in 4.1 through 4.3.

4.1 Test samples.



Source: https://assist.dla.mil -- Downloaded: 2016-12-31T21:01Z
Check the source to verify that this is the current version before use.

4.1.1 Sets. Two sets of each cable construction are to be tested (two burns). Each set tested is to be done using previously untested cable.

4.1.2 Length. Each set consists of multiple, 2.44 m (8 feet) cable lengths fastened in a single layer in the cable tray. The number of cable lengths (of a round cable) per set, N = (4/D) + 0.33 where D is the diameter of the cable in millimeters and N is rounded up to the nearest whole number.

4.1.3 Diameter. The following method to measure a diameter is provided as guidance. A micrometer, vernier calipers or a diameter tape with an accuracy of 0.025 mm (.001 inch) minimum can be used. For rounded and for uniform cross sections, perform a minimum of five measurements over a 0.3 m (1 foot) length. The average of the five measurements is used as the diameter. For non-uniform cross sections with width to thickness ratio less than 2:1, take three measurements at wide points and three at narrow points. The diameter is the average of the six measurements. For non-uniform cross sections with width to thickness ratio greater than 2:1, use the width of the cable as the diameter. Take six measurements at six locations on a 0.3 m (1 foot) length. The diameter is the average of the six measurements.

4.2 Test apparatus verifications.

4.2.1 Apparatus dimensional suitability. Obtain documented evidence of test chamber compliance to dimensions, materials, and construction specified in UL 1685.

4.3 Test equipment.

4.3.1 Air velocity measurement.

4.3.1.1 Pressure probe type. Differential pressure measured in flow path using a bi-directional probe (pressure taps on both sides of a diaphragm).

4.3.1.2 Pressure probe location. Place at centerline of duct downstream of last turn in the duct at location to ensure a nearly uniform air velocity across the duct.

4.3.1.3 Pressure measurement device. Pressure transducer shall have a minimum resolution of 0.025 Pa (.001 inch $H_2O$).

4.3.1.4 Inlet air supply. Temperature at 23°C ±5°C (73°F ±9°F).

4.3.2 Temperature measurement (exhaust gas).

4.3.2.1 Location: Exhaust gas temperature is to be measured 152 mm (6 inches) upstream from the pressure probe on the centerline of the duct.

4.3.2.2 Temperature sensor type. Type K, 28 AWG (0.08 $mm^2$) thermocouple with an Inconel sheath.

4.3.3 Propane gas.

4.3.3.1 Verify a higher heating value. Propane gas is to be Special Duty propane (as defined in ASTM D1835) or HD-5 propane (as defined in GPA Standard 2140) and shall have a nominal heating value of 2,500 BTU (thermochemical) per cubic foot. Verification may be done with a gas calorimeter.

4.3.3.2 Gas consumption. A gas meter shall be calibrated and used to record gas consumption. The gas meter shall measure a rate at least 0.00023 $m^3/s$ (29 $ft^3$ per hour).

4.3.3.3 Air consumption. An air flow meter shall be calibrated and used to record the rate of air flow. The air flow meter shall measure a rate at least 0.00133 $m^3/s$ (170 $ft^3$ per hour).

4.3.3.4 Measurement accuracy. Gas and air flow measurements are to be accurate within 3 percent.



Source: https://assist.dla.mil -- Downloaded: 2016-12-31T21:01Z
Check the source to verify that this is the current version before use.

4.3.4 Data acquisition.

4.3.4.1 Data collected and recorded. Pressure measurements.

4.3.4.2 Measurement intervals. Measure at intervals of 5 seconds or less.

5. Test procedure. Measurement 3406 shall be conducted in accordance with the processes specified in UL-1685 with the restrictions specified in 5.1 through 5.3.

5.1 Summary.

a. Condition the chamber for at least three hours with air at a temperature of 23°C ±5°C (73°F ±9°F) so that the test chamber is dry.

b. Install the cable length in the cable tray.

c. Pre cool chamber to 5°C (41°F) so that cable, chamber and air temperature are in equilibrium.

d. Establish a nominal flow rate of the exhaust air of 0.65 $m^3$/s ±0.05 $m^3$/s (23.0 $ft^3$ ±1.8 $ft^3$/s) in the duct.

e. Ignite burner and set flow rates. Rate of propane flow shall be 220 $cm^3$/s ±8 $cm^3$/s (28 $ft^3$ ±1 $ft^3$/hr.) when corrected to standard temperature and pressure (20°C, 101 kPa). Rate of air flow shall be 1,280 $cm^3$/s ±8 $cm^3$/s (163 $ft^3$/hr. ±1 $ft^3$/hr.) when corrected to standard temperature and pressure.

f. Ignite methane flame and start data acquisition system simultaneously. Record pressure output at a maximum interval of five seconds.

g. Observe and record flame height during the 20 minute test.

h. Stop the test after 20 minutes. Burner flame is to be extinguished and cable fire (if any) is to be allowed to burn itself out.

i Observe and record time in seconds that the cables continue to burn following removal of the burner flame.

5.2 Determination of cable damage.

5.2.1 Measurement resolution. Record cable damage to the nearest 25 mm (1 inch).

5.2.2 Measurement height. Measurement shall be made from the bottom of the tray.

5.2.3 Determination of damage. Burning is considered to be charring, melting, blistering and other damage of the cable from burning of the cable ignited by the burner flame. Soot shall be removed with a cloth after the cables have cooled to room temperature prior to the examination for burning.

5.2.4 Determination of charring. Press on the cable jacket at a number of points. Where a cable surface changes from resilient to brittle (crumbling) is defined as the limit of the char.

5.2.5 Height of damage to top of tray should be clearly specified on the data sheet.

5.3 Data sheet. In addition to the items for the standard data sheet listed in MIL-STD-1678-2 Measurement 2201, the data sheet is to list the items in 5.3a through 5.3c.

a. Flame temperature.



Source: https://assist.dla.mil -- Downloaded: 2016-12-31T21:01Z
Check the source to verify that this is the current version before use.

b. Period of time between burner shut off and cessation of flame on the specimen.

c. Overall distance of specimen jacket damage above the burner.

6. Notes.

6.1 Intents behind standardization efforts.

6.1.1 Multiple party testing considerations. The incentive to minimize test variables, resulting in a level playing field for multiple parties testing, leads the Government to establish a baseline. This baseline includes considerations for fabrication of test samples, methods to employ launch conditions, and use of specific test practices in addition to specifics for test sample configurations.



Source: https://assist.dla.mil -- Downloaded: 2016-12-31T21:01Z
Check the source to verify that this is the current version before use.

MEASUREMENT 3407

TOXICITY INDEX

1. Purpose. This measurement is intended to provide further direction and consistency for toxicity index in accordance with MODUK DEF STA 02-713. Intent is for the cables to be self-extinguishing and not burn to the top of the tray. To ensure that the risk to the Government of accepting bad measurement data is low, to minimize test variations and to permit more accurate comparison of test results from multiple sources, a “standardized” approach is specified to perform this measurement.

2. Applicable documents.

2.1 General. The documents listed in this section are specified in sections 3, 4, and 5 of this standard practice. This section does not include documents cited in other sections of this standard practice or recommended for additional information or as examples. While every effort has been made to ensure the completeness of this list, document users are cautioned that they must meet all specified requirements of documents cited in sections 3, 4, and 5 of this standard practice, whether or not they are listed.

2.2 Other Government documents, drawings, and publications. The following other Government documents, drawings, and publications form a part of this document to the extent specified herein. Unless otherwise specified, the issues of these documents are those cited in the solicitation or contract.

MODUK DEF STA 02-713 - Determination of the Toxicity Index of the Products of Combustion from Small Specimens of Materials - Issue 3: 2/2012; Category 2

(Copies are available from http://www.global.ihs.com or to Global Engineering Documents, 1990 M Street NW, Suite 400, Washington, DC 20036.)

2.3 Order of precedence. Unless otherwise noted herein or in the contract, in the event of a conflict between the text of this document and the references cited herein, the text of this document takes precedence. Nothing in this document, however, supersedes applicable laws and regulations unless a specific exemption has been obtained.

3. Definitions.

3.1 Toxicity index. The sum of numerical toxicity factors from selected gases in the combustion products of the material being tested. The toxicity factors are based on the calculated quantity of each gas produced when 100 grams of the material is burnt (in air at a volume of 1 cubic meter). The resulting concentration is one that is fatal at a specified exposure time. An index of 1 (for a given volume) is fatal in 30 minutes (average value). Concentrations fatal at a 30 minute exposure for the selected gases are specified in MODUK DEF STA 02-713 and used in the calculation for the toxicity index.

4. Setup. Measurement 3407 shall be conducted in accordance with the setup specified in MODUK DEF STA 02-713 with the restrictions specified in 4.1 through 4.3.

4.1 Test samples.

4.1.1 Length. 8 cm (3.15 inches).

4.1.2 Exposed cable ends. Preparation shall include sealing cable ends with high temperature cement.

4.2 Test apparatus verifications.

4.2.1 Apparatus dimensional suitability. Obtain documented evidence of test chamber compliance to dimensions, materials, and construction. Specifically, a minimum volume of 0.7 $m^3$ volume, lined with plastic (polypropylene preferred) and fitted with a transparent plastic panel (polycarbonate preferred).



Source: https://assist.dla.mil -- Downloaded: 2016-12-31T21:01Z
Check the source to verify that this is the current version before use.

4.2.2 Required features. Obtain documented evidence that chamber contains the following features: Chamber is air tight and contains airtight ports for sampling positions (to place calorimeter tubers), a forced air extraction system, a mixing fan (six-bladed axial fan with minimum 200 mm diameter, mounted horizontally).

4.2.3 Chamber internal walls and door. Coated with or constructed of an inert non-metallic material.

4.2.4 Burner. Obtain documented evidence that a Bunsen burner for methane with a 125 mm (4.92 inch) overall height, 11 mm (.43 inch) bore burner tube and a 5 mm (.20 inch) bore air and gas inlet tubes are used. Verify that the Bunsen burner is modified to operate from an external air supply (so as not to deplete oxygen in the chamber.)

4.2.5 External flame ignition. Obtain documented evidence that provisions exist for igniting and extinguishing the flame from outside the chamber.

4.2.6 Methane supply. Obtain documented evidence that methane supply has an approximate caloric value of 40 $MJ/m^3$.

4.3 Test equipment.

4.3.1 Flow measurement. Measurement devices, as required, to establish flame temperature.

4.3.1.1 Air flow. Air flow rate during test is to be set at approximately 15 liters per minute during the test to obtain a flame temperature of 1,150°C ±50°C at the hottest portion of the flame.

4.3.1.2 Methane flow. Gas flow rate during test is to be set at approximately 10 liters per minute during the test to obtain a flame temperature of 1,150°C ±50°C at the hottest portion of the flame.

4.3.2 Temperature measurement (flame temperature).

4.3.2.1 Flame height: Method to measure a 100 mm (approximate) specified flame height from outside the chamber.

4.3.2.2 Temperature sensor. Sensor is able to measure a temperature of 1,150°C ±50°C at the hottest portion of the flame.

4.3.2.3 Measurement method. Method to place the temperature sensor within the hottest part of the flame external to the chamber.

4.3.3 Time measurement. Verify that timing device is capable of measurement periods up to 5 minutes with a minimum accuracy within ±1 second.

4.3.4 Gas concentration measurements.

a. Any analytical system that allows rapid detection and estimation of gases in products of combustion is acceptable.

b. Calorimetric gas reaction tubes are acceptable.

c. Gases to be measured are to include carbon dioxide ($CO_2$), Carbon monoxide (CO), formaldehyde (HCHO), Nitrogen oxides (NO and $NO_2$), hydrogen cyanide (HCN), Acrylonitrile ($CH_2CHCN$), Phosgene ($COCl_2$), Sulfur dioxide ($SO_2$), hydrogen sulfide ($H_2S$), Hydrogen chloride (HCl), Ammonia ($NH_3$), Hydrogen fluoride (HF), Hydrogen bromide (HBr), and Phenol ($C_6H_5OH$).

4.3.5 Mass measurement. Measure test sample to nearest milligram.



Source: https://assist.dla.mil -- Downloaded: 2016-12-31T21:01Z
Check the source to verify that this is the current version before use.

5. Test procedure. Measurement 3407 shall be conducted in accordance with the processes specified in MODUK DEF STA 02-713 with the restrictions specified in 5.1 and 5.2.

5.1 Summary.

a. Condition the chamber for at least three hours with air at a temperature of 23°C ±2°C (73°F ±3.5°F) and 50 percent ±5 percent relative humidity for 24 hours.

b. Determine background correction factors for CO, $CO_2$, and for NO and $NO_2$ (oxides of nitrogen). Subtract these levels out from measurements taken later with the burning sample.

(1) Position Bunsen burner in center of chamber, ignite and adjust flow rates of air and methane to achieve a flame temperature of 1,150°C ±50°C at the hottest portion of the flame. Record flow rates. Extinguish flame. Vent chamber.

(2) Place CO, $CO_2$, and oxides of nitrogen reaction tubes in position.

(3) Seal chamber. Ignite Bunsen burner and simultaneous start timing. Maintain flame for one minute, then extinguish flame and start mixing fan. Allow fan circulation for 30 seconds.

(4) Extract portions of chamber atmosphere to determine CO, $CO_2$, and oxides of nitrogen concentrations.

(5) Open chamber to outside air and evacuate for 3 minutes.

(6) Repeat steps 5.1b(1) through 5.1b(5) except maintain burning condition for two minutes and three minutes in separate runs.

c. Verify air temperature is 23°C ±3°C (73°F ± 5.5°F).

d. Weight test sample.

e. Position Bunsen burner in center of chamber, ignite and adjust flow rates of air and methane to achieve a flame temperature of 1,150°C ± 50°C at the hottest portion of the flame. Record flow rates. Extinguish flame.

f. Place test sample in support and position in center of chamber. Adjust height so that test sample will be positioned within flame boundary and at hottest portion of the flame. Place a thin layer of glass wool on wire mesh to prevent loss due to dripping or melting.

g. Verify forced extraction ventilation system is off.

h. Insert series of colorimeter tubes into chamber.

i. Close chamber door.

j. Turn on air and methane supplies. Simultaneously ignite Bunsen burner and start timing device.

k. Burn period is to continue until complete combustion of test sample occurs. Extinguish flame and record burn time.

l. Start mixing fan, mix for 30 seconds, then switch fan off.



Source: https://assist.dla.mil -- Downloaded: 2016-12-31T21:01Z
Check the source to verify that this is the current version before use.

m. Extract portions of chamber atmosphere and draw through each respective detection tube. (If halogens are present, test for halogens first).

n. Open chamber to outside air and evacuate for 3 minutes.

o. Verify complete combustion of the test sample.

p. Repeat steps 5.1.a through 5.1.o with fresh test samples.

5.2 Calculations.

a. Graph results of background correction factors for CO, $CO_2$, and for NO and $NO_2$ (oxides of nitrogen) to show rates of build-up with time. Zero time can be shown as 0.03 percent $CO_2$ and zero for CO, NO, and $NO_2$. Subtract these levels out from measurements taken later with the burning sample.

b. Calculate Ct, the concentration (ppm) of each gas produced in the test chamber, when 100 g of material is burnt in a 1 $m^3$ volume using the formula: Ct = (Cx100xV)/m. C = concentration of the gas in the chamber in ppm, m = mass of the test sample in grams, V = chamber volume in $m^3$.

c. Calculate the Toxicity Index = S [(Ct1/Cf1) +(Ct2/Cf2) +(Ct3/Cf3) + … +(Ctn/Cfn)] where 1,2,3…n represents each gas detected, Cf = concentration of the gas considered fatal to man for a 30 minute exposure time (see Annex A of NES 713 for values).

6. Notes.

6.1 Intents behind standardization efforts.

6.1.1 Multiple party testing considerations. The incentive to minimize test variables, resulting in a level playing field for multiple parties testing, leads the Government to establish a baseline. This baseline includes considerations for fabrication of test samples, methods to employ launch conditions and use of specific test practices in addition to specifics for test sample configurations.



Source: https://assist.dla.mil -- Downloaded: 2016-12-31T21:01Z
Check the source to verify that this is the current version before use.

MEASUREMENT 3408

SHELL TO SHELL CONDUCTIVITY

1. Purpose. This measurement is intended to provide further direction and consistency for the measurement of shell-to-shell conductivity. Former testing has shown inconsistent results. Suspected causes are incorrect conversion of units (such as volts to millivolts or amperes to milliamperes), use of different test probes (different applied pressure, different contact area/probe geometry – pointed verses rounded) or equipment (using correct settings on multimeters, placing instrument ends of test probes into correct meter ports) and different evaluation criteria. The content below provides further direction for setup, processes and evaluation criteria. To ensure that the risk to the Government of accepting bad measurement data is low, to minimize test variations and to permit more accurate comparison of test results from multiple sources, a "standardized" approach is specified to perform this measurement.

2. Applicable documents.

2.1 General. The documents listed in this section are specified in sections 3, 4, and 5 of this standard practice. This section does not include documents cited in other sections of this standard practice or recommended for additional information or as examples. While every effort has been made to ensure the completeness of this list, document users are cautioned that they must meet all specified requirements of documents cited in sections 3, 4, and 5 of this standard practice, whether or not they are listed.

2.2 Government documents.

2.2.1 Specifications, standards, and handbooks. The following specifications, standards, and handbooks form a part of this document to the extent specified herein. Unless otherwise specified, the issues of these documents are those cited in the solicitation or contract.

DEPARTMENT OF DEFENSE SPECIFICATIONS

| | | |
|---|---|---|
| MIL-DTL-38999 | - | Connectors, Electrical, Circular, Miniature, High Density, Quick Disconnect (Bayonet, Threaded, and Breech Coupling), Environment Resistant, Removable Crimp and Hermetic Solder Contacts, General Specification for. |
| MIL-PRF-28876 | - | Connectors, Fiber Optic, Circular, Plug and Receptacle Style, Multiple Removable Termini, General Specification for |

(Copies of these documents are available online at http://quicksearch.dla.mil/ or from the Standardization Document Order Desk, 700 Robbins Avenue, Building 4D, Philadelphia, PA 19111-5094.)

2.3 Non-Government publications. The following documents form a part of this document to the extent specified herein. Unless otherwise specified, the issues of these documents are those cited in the solicitation or contract.

TELECOMMUNICATIONS INDUSTRY ASSOCIATION

| | | |
|---|---|---|
| EIA-364 | - | Electrical Connector/Socket Test Procedures Including Environmental Classifications |
| EIA-364-83 | - | Shell to Shell and Shell to Bulkhead Resistance Test Procedure for Electrical Connectors. |

(Copies are available from http://www.global.ihs.com or to Global Engineering Documents, 1990 M Street NW, Suite 400, Washington, DC 20036.)



Source: https://assist.dla.mil -- Downloaded: 2016-12-31T21:01Z
Check the source to verify that this is the current version before use.

2.4 Order of precedence. Unless otherwise noted herein or in the contract, in the event of a conflict between the text of this document and the references cited herein, the text of this document takes precedence. Nothing in this document, however, supersedes applicable laws and regulations unless a specific exemption has been obtained.

3. Definitions.

3.1 Conductivity, electrical. A measure of the ability of a material to conduct an electric current when under the influence of an applied electric field. The conductivity is the constant of proportionality in the constitutive relation between the electrical current density and the applied electric field strength at a point in a material. It is expressed mathematically as $J = \varepsilon E$, where J is the current density, $\varepsilon$ is the electrical conductivity, and E is the electric field strength. For example, if J is in amperes per square meter and E is in volts per meter, the electrical conductivity is given as $\sigma = J/E$ amperes/volt-meter, (ohm-meter)', or mhos/meter.

4. Setup. This setup process assumes separate dc power supply, voltmeter, and amp meter are used to perform the test. Other equipment that consists of a combination of this equipment in one package and can consist of a more automated routine for performing the test can be used. If the latter, then the procedure listed must be tailored accordingly.

4.1 Establish open circuit voltage and series circuit current. This procedure assumes separate dc power supply, voltmeter, and amp meter are used to perform the test. Other equipment that consists of a combination of this equipment in one package and can consist of a more automated routine for performing the test can be used. If the latter, then the procedure listed must be tailored accordingly.

a. Turn on the dc power supply.
b. Set voltmeter to V dc and place voltmeter test leads across the power supply (+) and (-) ports.
   NOTE: If a multimeter is used, verify that test leads are connected to the correct ports for voltage on the multimeter.
c. Set open circuit voltage on the power supply to 1.5 V dc maximum.
d. Turn off dc power supply.
e. Place the first DUT to be tested in the mounting fixture.
f. Set the amp meter to A dc and place amp meter test leads in the ports on the amp meter.
   NOTE: If a multimeter is used, verify that test leads are connected to the correct ports for amps on the multimeter. Also, verify that the multimeter is set for A dc (not for A ac).
g. Place the dc power supply in series with the amp meter and with the DUT by attaching the test leads.
   NOTE: This setup should place the dc power supply, amp meter and DUT into a series circuit.
h. Turn on the dc power supply.
i. Set the power supply for 1 ±.1 A dc.
j. Record the value of the current is the series circuit (actual current).
k. Measure the voltage across the dc power supply.
l. Record this dc power supply voltage (verifying it is below 1.5 V dc maximum).
m. Turn off the dc power supply.

MEASUREMENT 3408



Source: https://assist.dla.mil -- Downloaded: 2016-12-31T21:01Z
Check the source to verify that this is the current version before use.

4.2 Identify measurement points on the DUT.

NOTE: This test addresses a shell-to-shell measurement and not a connector plug-to-bulkhead measurement. In the latter measurement, the connector receptacle is mounted to a mounting fixture/simulated bulkhead. The voltage drop is measured from the point specified on the connector plug to a point on the bulkhead next to the connector receptacle mounting flange.

4.2.1 Receptacle-to-plug configuration. Measurement point on a flange mounting connector receptacle shall be next (adjacent) to a flange mounting hole. Measurement point on a jam nut mounting connector receptacle shall be on the flange and next to the O-ring groove on the mounting side of the flange. Measurement point on the connector plug shall be at a point on the rear accessory threads (the threads at the cable entry end of the connector).

4.2.2 Receptacle-to-backshell configuration. Measurement point on a mounting flange connector receptacle shall be next to a flange mounting hole. Measurement point on a jam nut mounting connector receptacle shall be on the flange and next to the O-ring groove on the mounting side of the flange. Measurement point on the backshell shall be at a point on 25.4 mm ± 6.35 mm (1.0 inch ±.25 inch) from the innermost backshell threads that mate with the backshell gland nut.

4.2.3 Plug-to-backshell configuration. Measurement point on the connector plug shall be from a point on the rear accessory thread of the connector plug. Measurement point on the backshell shall be at a point 25.4 mm ± 6.35 mm (1.0 ± .25 inch) from the innermost backshell threads that mate with the backshell gland nut.

4.3 Setup equipment constraints.

4.3.1 Mounting fixture. When a mounting fixture is used, the portion of the mounting fixture used to secure the DUT (Device Under Test) shall be made of a non-conductive material. Otherwise, the DUT shall be measured on a non-conductive surface.

4.3.2 Direct current (dc) power supply. Power supply shall be capable of being set up initially with an open circuit voltage of 1.5 volts dc and capable of maintaining a current during testing of 1.0 amperes ± .1 A dc.

4.3.3 Voltmeter. Voltmeter shall be capable of measurements in the voltage range (to set the initial open circuit voltage) and in the millivolt range (to measure the voltage drop across the shell-to-shell) to within ±2 percent of the applied voltage.

4.3.4 Amp meter. Amp meter shall be capable of measuring the current in the series circuit of 1.0 A dc to within ±0.1 A dc.

4.3.5 Test probe. Test probes used to measure the voltage drop across the shell-to-shell shall have a spherical contact area with a minimum radius of 1.27 mm (.05 inch).

NOTE: The contact area of the test probe and the applied pressure of the test probe to the DUT shell can cause variations in the test measurement. A more pointed test probe can result in a higher voltage measurement. Lighter applied pressures can result in higher voltage measurements. A spring loaded clamping device with a ball or spherical contact surface is the preferred measurement end for a test probe.

4.3.6 Setup schematic. When separate pieces of test equipment are used to perform this measurement, the setup shall be in form of a series circuit for the voltage drop measurement. One test lead from the power supply shall be connected to one end of the DUT assembly. The other test lead from the power supply shall be connected to an Amp meter. The other lead from the Amp meter shall be connected to the other end of the DUT assembly. A volt meter shall be used to measure the voltage drop across the DUT assembly.



Source: https://assist.dla.mil -- Downloaded: 2016-12-31T21:01Z
Check the source to verify that this is the current version before use.

5. Procedure. Fiber optic components shall be tested in accordance with EIA-364-83. In addition, the following requirements for setup, processes, and evaluation criteria apply measurement 3408 shall be conducted in accordance with the methodology specified EIA-364-83 with the restrictions for setup, process and evaluation criteria specified herein and with the data sheet including the contents as specified in appendix A. Measurement processes shall include those summarized in 5.1 and 5.2. Requirements for the MIL-DTL-38999 and MIL-PRF-28876 multiple termini connectors are listed in appendix B.

5.1 Measure voltage drop across the DUT.

a. Place the DUT in the mounting fixture/series circuit path (if not the first DUT to be measured).

b. Turn on the dc power supply.

c. Record the value for the actual current (measured with the amp meter in the series circuit).

NOTE: Ensure that 1 A dc is obtained before proceeding further.

d. Measure the voltage drop across the DUT (see 4.2).

e. Record the voltage drop in millivolts on the data sheet as the measured voltage.

f. Verify the measured voltage does not exceed the maximum required value. If it does, perform steps 5.1f(1) through 5.1f(5).

(1) Measure the voltage drop across component (receptacle, plug, or backshell) and verify that zero voltage (short circuit voltage) is obtained.

(2) If not, then verify that contact point is not on an area of corrosion.

(3) If not, then verify that connector is properly mated (de-mate, then re-mate components).

(4) If not, then check for other phenomena that might cause a lower conductive (higher resistance) current path.

(5) If not, then record that measured voltage drop as a “fail”.

g. Turn off the dc power supply.

h. Remove the DUT from the series circuit.

i. Repeat steps 5.1a through 5.1h for each DUT to be tested.

5.2 Calculate shell-to-shell conductivity (resistance).

5.2.1 Measurement of millivolts versus resistance. This test is called a shell-to-shell resistance test; however, EIA-364-83 specifies to measure the voltage drop. Other specifications may stipulate the requirement in resistance. If the requirements are specified in terms of millivolts, then the resistance does not need to be calculated.



Source: https://assist.dla.mil -- Downloaded: 2016-12-31T21:01Z
Check the source to verify that this is the current version before use.

5.2.2 Measurement of resistance. See 6.2 for an historical account for measuring resistivity versus voltage.

a. The following formula shall be used to determine the calculated resistance:

$$R_c = \frac{V_m}{I_A}$$

Where: $R_C$ = Calculated resistance in MΩ (milliohms).

$V_m$ = Measured voltage in V dc (volts dc).

$I_A$ = Actual current in A dc (Amps dc).

b. Record the calculated resistance in milliohms on the data sheet.

c. Record the value specified for the requirement of calculated resistance.

d. Mark if the DUT is a pass or fail on the data sheet.

6. Notes.

6.1 Intents behind standardization efforts.

6.1.1 Multiple party testing considerations. The incentive to minimize test variables, resulting in a level playing field for multiple parties testing, leads the Government to establish a baseline. This baseline includes considerations for fabrication of test samples, methods to employ launch conditions, and use of specific test practices in addition to specifics for test sample configurations.

6.2 Resistivity measurements. EIA 364 specified a resistance measurement (thus the name “shell-to-shell conductivity). This test specifies a current of 1.0 ± .1 A dc be used. The measured voltage divided by the actual current is the calculated resistance. Since the actual current = 1 A, the value for the measured voltage is equivalent to the value specified for the requirement of calculated resistance. The unit of measure is millivolts instead of milliamps.



Source: https://assist.dla.mil -- Downloaded: 2016-12-31T21:01Z
Check the source to verify that this is the current version before use.

MEASUREMENT 3408

APPENDIX A

Sample Data Sheet

Project number:
Specification:
Specification sheet(s):

Date:
Tested by:

Instrumentation used to perform shell-to-shell conductivity test.

| Instrumentation | Manufacturer | Model number | Serial number | Calibration due date |
|---|---|---|---|---|
| DC power supply | | | | NCR A 1/ |
| Multimeter 2/ | | | | |
| Multimeter 3/ | | | | |

1/ NCR = No calibration required, A = not used to make quantitative measurements (instead multimeters are used).
2/ Multimeter used to set open circuit voltage and in-series current initially, then used for obtain measured voltage for each mated pair. The “in-series” current is current set with DUT (Device Under Test), dc power supply and amp meter in series.
3/ Multimeter used to monitor the in-series current during the test.

Open circuit voltage:
Actual current, initial:

| Test sample number | Actual current (A dc) | Measured voltage (V dc) | Calculated resistance (mOhm) | Required max (mV or mOhm) | Pass/ fail |
|---|---|---|---|---|---|
| | | | | | |
| | | | | | |
| | | | | | |
| | | | | | |
| | | | | | |
| | | | | | |
| | | | | | |
| | | | | | |
| | | | | | |
| | | | | | |
| | | | | | |
| | | | | | |
| | | | | | |
| | | | | | |
| | | | | | |
| | | | | | |

Comments



Source: https://assist.dla.mil -- Downloaded: 2016-12-31T21:01Z
Check the source to verify that this is the current version before use.

# APPENDIX B

## MULTIPLE TERMINI CONNECTOR REQUIREMENTS

B.1 Purpose. This appendix provides in tabular format a listing of the maximum allowed values for shell-to-shell conductivity that are specified in various military fiber optic component specifications.

B.2 Applicable documents.

B.2.1 General. The documents listed in this section are specified in sections B.3 and B.4 of this appendix. This section does not include documents cited in other sections of this appendix or recommended for additional information or as examples. While every effort has been made to ensure the completeness of this list, document users are cautioned that they must meet all specified requirements of documents cited in sections B.3 and B.4 of this appendix, whether or not they are listed.

B.2.2 Government documents.

B.2.2.1 Specifications, standards, and handbooks. The following specifications, standards, and handbooks form a part of this document to the extent specified herein. Unless otherwise specified, the issues of these documents are those cited in the solicitation or contract.

DEPARTMENT OF DEFENSE SPECIFICATIONS

| | | |
|---|---|---|
| MIL-DTL-38999 | - | Connectors, Electrical, Circular, Miniature, High Density, Quick Disconnect (Bayonet, Threaded, and Breech Coupling), Environment Resistant, Removable Crimp and Hermetic Solder Contacts, General Specification for. |
| MIL-PRF-64266 | - | Connectors, Fiber Optic, Circular, Plug and Receptacle Style, Multiple Removable Genderless Termini, Environment Resisting General Specification for. |

(Copies of these documents are available online at http://quicksearch.dla.mil/ or from the Standardization Document Order Desk, 700 Robbins Avenue, Building 4D, Philadelphia, PA 19111-5094.)

B.2.3 Order of precedence. Unless otherwise noted herein or in the contract, in the event of a conflict between the text of this document and the references cited herein, the text of this document takes precedence. Nothing in this document, however, supersedes applicable laws and regulations unless a specific exemption has been obtained.

B.3 Pass/fail criteria. Criteria shall be as specified in B.3.1 through B.3.3.

B.3.1 MIL-DTL-38999 Series III (3.28). Test probe shall not puncture or otherwise damage the plating finish. Maximum measured voltage drop across a connector mated pair (receptacle-to-plug) or assembled connector (connector receptacle or plug-to-backshell) shall be 2.5 millivolts for MIL-DTL-38999 Series III connector at the start of testing. After conditioning (performing a neutral salt spray test or a modified $SO_2$/salt spray test and the coupling torque), the maximum voltage drop shall be 5 millivolts.

B.3.2 MIL-PRF-64266 (3.14.18) with conductive plating (aluminum and composite shell base). Maximum measured voltage drop across a connector mated pair (receptacle-to-plug) or assembled connector (connector receptacle or plug-to-backshell) at the start of testing (initial) shall be 3 millivolts for MIL-PRF-64266 connector with a conductive plating (both metallic and non-metallic shell materials). After conditioning, the maximum measured voltage drop shall be 5 millivolts.



Source: https://assist.dla.mil -- Downloaded: 2016-12-31T21:01Z
Check the source to verify that this is the current version before use.

B.3.3 MIL-PRF-64266 (3.14.18) with conductive plating or no plating (CRES shell base). Maximum measured voltage drop across a connector mated pair (receptacle-to-plug) or assembled connector (connector receptacle or plug-to-backshell) at the start of testing (initial) shall be 10 millivolts for MIL-PRF-64266 connector with a conductive plating (both metallic and non-metallic shell materials). After conditioning, the maximum measured voltage drop shall be 20 millivolts.

B.4 Intended use. B.3.1 through B.3.3 provides pass/fail criteria to assist Government auditors, or their representatives, during documentation reviews (such as test procedures and test reports) and inspections. Revisions to the military specifications supersede any values found in B.3.1 through B.3.3.



Source: https://assist.dla.mil -- Downloaded: 2016-12-31T21:01Z
Check the source to verify that this is the current version before use.

MEASUREMENT 3409.1

FLUID IMMERSION

1. Purpose. This measurement is intended to provide further direction and consistency for the fluids and processes to be used in this measurement. To ensure that the risk to the Government of accepting bad measurement data is low, to minimize test variations and to permit more accurate comparison of test results from multiple sources, a “standardized” approach is specified to perform this measurement.

2 Applicable documents.

2.1 General. The documents listed in this section are specified in sections 3, 4, or 5 of this standard practice. This section does not include documents cited in other sections of this standard practice or recommended for additional information or as examples. While every effort has been made to ensure the completeness of this list, document users are cautioned that they must meet all specified requirements of documents cited in sections 3, 4, or 5 of this standard practice, whether or not they are listed.

2.2 Government documents.

2.2.1 Specifications, standards, and handbooks. The following specifications, standards, and handbooks form a part of this document to the extent specified herein. Unless otherwise specified, the issues of these documents are those cited in the solicitation or contract.

FEDERAL SPECIFICATIONS

MIL-PRF-5606 - Hydraulic Fluid, Petroleum Base; Aircraft, Missile, and Ordnance
MIL-DTL-16884 - Fuel, Naval Distillate
MIL-PRF-16173 - Corrosion Preventive Compound, Solvent Cutback, Cold-Application
MIL-PRF-17331 - Lubricating Oil, Steam Turbine and Gear, Moderate Service
MIL-PRF-17672 - Hydraulic Fluid, Petroleum, Inhibited
MIL-PRF-23699 - Lubricating Oil, Aircraft Turbine Engine, Synthetic Base, NATO Code Number O-156
MIL-PRF-81309 - Corrosion Preventive Compounds, Water Displacing, Ultra-Thin Film
MIL-PRF-83282 - Hydraulic Fluid, Fire Resistant, Synthetic Hydrocarbon Base, Metric, NATO Code Number H-537
MIL-PRF-85570 - Cleaning Compounds, Aircraft, Exterior
MIL-PRF-87252 - Coolant Fluid, Hydrolytically Stable, Dielectric
MIL-PRF-87257 - Hydraulic Fluid, Fire Resistant; Low Temperature, Synthetic Hydrocarbon Base, Aircraft and Missile
TT-I-735 - Isopropyl Alcohol

FEDERAL STANDARD

FED-STD-228 - Cable and Wire, Insulated; Methods of Testing.

(Copies of these documents are available online at http://quicksearch.dla.mil/ or from the Standardization Document Order Desk, 700 Robbins Avenue, Building 4D, Philadelphia, PA 19111-5094.)

2.3 Non-Government publications. The following documents form a part of this document to the extent specified herein. Unless otherwise specified, the issues of these documents are those cited in the solicitation or contract.



Source: https://assist.dla.mil -- Downloaded: 2016-12-31T21:01Z
Check the source to verify that this is the current version before use.

SAE INTERNATIONAL

| | | |
|---|---|---|
| SAE-AS1241 | - | Fire Resistant Phosphate Ester Hydraulic Fluid for Aircraft |
| SAE-AMS1424 | - | Fluid, Deicing/Anti-Icing, Aircraft, SAE Type I |
| SAE-AMS1435 | - | Fluid, Generic, Deicing/Anti-Icing Runways and Taxiways |

(Copies of these documents are available online at http://www.sae.org or from the SAE World Headquarters, 400 Commonwealth Drive, Warrendale, PA 15096-0001.)

TELECOMMUNICATIONS INDUSTRY ASSOCIATION

| | | |
|---|---|---|
| TIA-455-12 | - | Fluid Immersion Test for Fiber Optic Components. |

(Copies are available online at www.tiaonline.org or from Telecommunications Industry Association (TIA), 2500 Wilson Boulevard, Suite 300, Arlington VA 22201.)

2.4 Order of precedence. Unless otherwise noted herein or in the contract, in the event of a conflict between the text of this document and the references cited herein, the text of this document takes precedence. Nothing in this document, however, supersedes applicable laws and regulations unless a specific exemption has been obtained.

3. Definitions.

3.1 Medium measurement value. The middle value in the data with an odd number of measurements or readings.



Source: https://assist.dla.mil -- Downloaded: 2016-12-31T21:01Z
Check the source to verify that this is the current version before use.

4. Measurement. The DUT shall be measured (tested) for its materials being resistant to the effects when exposed to fluids over its service life as specified in the component military specification with further direction cited in this measurement (3409). Depending upon component, the tests listed in 4a through 4c may be required as part of this measurement.

a. Tensile strength and elongation retention properties (using specimens of flat extruded polymeric jacket material, such as the same material as the cable outer jacket).
b. Outer diameter.
c. Immersion fluids. Immersions shall be performed using fluids with test conditions as specified in appendix A.

5. Implementation. Measurement 3409 shall be conducted in accordance with the methodology specified in TIA-455-12 except specimens (each DUT specimen and each polymeric material) shall be exposed to all of the fluids (see 5.5) at the temperatures specified in appendix A. Specimens shall be maintained at ambient conditions for a minimum of 4 hours prior to fluid testing. After immersion, all specimens shall be drained (for at least 10 minutes), blotted to remove excess fluid (without scrubbing or mechanically interacting), rinsed with moderate agitation (using only a back and forth or up and down type motion) for a maximum of 30 seconds in isopropyl alcohol (TT-I-735), blotted dry (without scrubbing or mechanically interacting), and air dried for a minimum of one hour prior to inspection and transfer to subsequent fluid. After testing, each specimen shall be visually examined for conformance to the inspection requirements. The test methodology employed in evaluating the effects/resistance of the DUT materials to fluid immersion shall include the measurement processes as summarized in 5.1 through 5.6.

5.1 Exposure of ends to fluid. Unless ends (or instrument connections) of specimen are sealed environmentally, ends are to be exposed to the atmosphere (not to be immersed into the fluid).

5.2 Certification of proper test fluids. Documentation for verification of each test fluid shall be presented for this test.

5.3 Safety measure with oven type. As a safety measure or unless other precautions are taken, the heated fluids should be done in an explosion proof oven, not an environmental chamber. Vapor build-up in an environmental chamber can cause a hazardous condition.

5.4 Flat extruded jacket material preparation. Verification of proper dumbbell preparation of flat extruded jacket material is to be provided. These are the specimens of flat extruded jacket material that are to undergo material tensile strength and elongation testing after the completion of the immersions into the specified fluids.

5.5 Number of samples to immerse per fluid.

5.5.1 Fiber optic cable. Separate cable specimens are to be immersed in each of the fluids listed. Separate flat extruded jacket material specimens (see 5.4) are to be immersed in each of the fluids listed. A minimum of three flat extruded jacket material specimens are required for each fluid in order to perform the jacket tensile strength and elongation (T and E) tests (see 5.6.1 and Measurement 3410).

5.5.2 Other fiber optic components. DUT assemblies (each DUT specimen and each sample of polymeric material, the latter in the form of flat extruded jacket material) shall be exposed to all of the fluids at the temperatures specified in appendix A. If the cable degrades during these consecutive immersions, then the cable can be replaced and testing can be restarted with the immersion fluid in which the cable degradation occurred.

5.6 Calculations.

5.6.1 Specimen size based on calculation method. When specified for a particular fiber optic component, a minimum of 3 flat extruded jacket material specimens (that are the same material as the outer cable jacket) are to be immersed in each fluid prior to performance of a material tensile strength and elongation test (see 5.2 of Federal Test Standard 228, method 3021). Five flat extruded jacket material specimens versus three are to be immersed in each fluid; however, if the medium of the results are used for the pass/fail criteria (see 5.3 of Federal Test Standard 228, method 3021).



Source: https://assist.dla.mil -- Downloaded: 2016-12-31T21:01Z
Check the source to verify that this is the current version before use.

5.6.2 Diameter calculation. When specified to measure the outer jacket diameter of the cable or other fiber optic components, the outer diameter measured for swell may be determined by finding diameter in same location 90 degrees apart. Outer diameter may be found by measuring the circumference and calculating the diameter (C=PIxD). Method used to measure outer diameter should be consistent with that specified in an applicable test standard (such as FED-STD-228).

6. Notes.

6.1 Intents behind standardization efforts.

6.1.1 Multiple party testing considerations. The incentive to minimize test variables, resulting in a level playing field for multiple parties testing, leads the Government to establish a baseline. This baseline includes considerations for fabrication of test samples, methods to employ launch conditions and use of specific test practices in addition to specifics for test sample configurations.



Source: https://assist.dla.mil -- Downloaded: 2016-12-31T21:01Z
Check the source to verify that this is the current version before use.

TABLE 3409-AI. Fluid immersion test table.

| Category | Fluid type | Specification 1/ | Test temperature range 1 °C (°F) 2/,11/ | Test temperature range 2 °C (°F) 3/ |
|---|---|---|---|---|
| Fuel | Turbine engine fuel reference fluid | SAE-AMS2629, type 1 4/ | 50 (122) | 60 (140) |
| | Fuel | MIL-DTL-16884 | 35 (95) | 35 (95) |
| | Automobile gasoline | ASTM D 4814 | Not applicable | 25 (77) |
| Hydraulic fluid | Petroleum based, red | MIL-PRF-5606 | 50 (122) | 70 (158) |
| | Synthetic hydrocarbon/diester based | MIL-PRF-83282 | Not applicable | 70 (158) |
| | Synthetic hydrocarbon /PAO based, red | MIL-PRF-87257 | Not applicable | 70 (158) |
| | | MIL-PRF-17672 | 50 (122) | 60 (140) |
| | Phosphate ester based | SAE- AS1241, type IV, class 1 | Not applicable | 70 (158) |
| Lubricating oil | | MIL-PRF-17331 | 70 (158) | 121 (250) |
| | | MIL-PRF-23699 | 70 (158) | 121 (250) |
| Coolant fluid | Coolanol 25R | 5/ | 25 (77) | 60 (140) |
| | PAO based dielectric fluid | MIL-PRF-87252 | Not applicable 6/ | 60 (140) |
| Deicer | Aircraft | SAE-AMS1424 | Not applicable | 60 (140) |
| | Runway | SAE-AMS1435 | Not applicable | 60 (140) |
| Water | Sea | ASTM D1141 | 25 (77) | 60 (140) |
| | Reagent 7/ | ASTM D1193 | Not applicable | 60 (140) |
| Cleaners/solvents | Isopropyl alcohol | TT-I-735 8/ | 25 (77) | 60 (140) |
| | Methyl isobutyl ketone | ASTM D1153 9/ | Not applicable | 60 (140) |
| | Alkaline detergent | MIL-PRF-85570 10/ | Not applicable | 60 (140) |
| Corrosion preventive compound | | MIL-PRF-16173, grade 4 | Not applicable | 60 (140) |
| | | MIL-PRF-81309, type III | Not applicable | 60 (140) |

1/ Test duration for all fluids is 48 hours in temperature range 2 and 24 hours in temperature range 1.
2/ Unless otherwise specified. temperature range 1 is for tri-service components with an operating temperature range of -40°C (-40ºF) to 85°C (185ºF) and for Navy shipboard components with an operating temperature range of -28°C (-14ºF) to 65°C (147ºF).
3/ Unless otherwise specified, temperature range 2 is for tri-service aircraft components with an operating temperature range of -55°C (-67ºF) to 165°C (329ºF).
4/ JP-8 conforming to MIL-DTL-83133 may be used in lieu of AMS2629 only if the aromatic content is increased to 25 percent using toluene.
5/ Source of supply: Exxon-Mobile Chemical.
6/ Not applicable is stating that the fluid is not used in the test (not for temperature range 1).
7/ Reagent water is specified in lieu of tap water.
8/ Reagent grade only.
9/ This fluid is being cited in lieu of Methyl Propyl Ketone in accordance with BMS 11-9.
10/ Type II tested with a 4:1 dilution.
11/ Test temperatures listed in this column are the minimum required. When the DUT, configured or assembled to meet temperature range 1 can withstand fluid immersion at the temperature specified for temperature range 2, then the DUTs configured or assembled for both temperature ranges may be immersed in that fluid and tested together at the temperature 2 range.



Source: https://assist.dla.mil -- Downloaded: 2016-12-31T21:01Z
Check the source to verify that this is the current version before use.

MEASUREMENT 3410

CABLE JACKET TENSILE STRENGTH AND ELONGATION

1. Purpose. This measurement is intended to provide further direction for equipment, setup, processes, and evaluation criteria for ensuring that Measurement 3410 for cable jacket tensile strength and elongation is done in a consistent manner. This measurement pertains to dumbbell test samples cut from specimens of extruded flat jacket material. To ensure that the risk to the Government of accepting bad measurement data is low, to minimize test variations and to permit more accurate comparison of test results from multiple sources, a “standardized” approach is specified to perform this measurement.

2. APPLICABLE DOCUMENTS

2.1 General. The documents listed in this section are specified in sections 3 and 4 of this specification. This section does not include documents cited in other sections of this specification or recommended for additional information or as examples. While every effort has been made to ensure the completeness of this list, document users are cautioned that they must meet all specified requirements of documents cited in sections 3 and 4 of this specification, whether or not they are listed.

2.2 Government documents.

2.2.1 Specifications, standards, and handbooks. The following specifications, standards, and handbooks form a part of this document to the extent specified herein. Unless otherwise specified, the issues of these documents are those cited in the solicitation or contract.

FEDERAL STANDARD

FED-STD-228 - Cable and Wire, Insulated; Methods of Testing

(Copies of this document are available online at http://quicksearch.dla.mil/ or from the Standardization Document Order Desk, 700 Robbins Avenue, Building 4D, Philadelphia, PA 19111-5094.)

2.3 Non-Government publications. The following documents form a part of this document to the extent specified herein. Unless otherwise specified, the issues of these documents are those cited in the solicitation or contract.

ASTM INTERNATIONAL

ASTM D412 - Standard Test Methods for Vulcanized Rubber and Thermoplastic Elastomers - Tension.

(Copies are available from http://www.astm.org or ASTM International, 100 Barr Harbor Drive, P. O. Box C700, West Conshockocken, PA 19428-2959.)

UNDERWRITERS LABORATORIES

UL 2556 - UL Standard for Safety Wire and Cable Test Methods - Third Edition

(Copies are available from http://www.ul.com or from Underwriters Laboratories, 333 Pfingsten Road, Northbrook, IL 60062-2096.)

3. Definitions.

3.1 Dumbbell specimen. The result of a flat extruded jacket material specimen buffed to a specified thickness and cut in the shape of a dumbbell in a specified die. The term in measurement 3410 is used to distinguish the pre-die cut specimen (flat extruded jacket material) from the post die cut specimen (dumbbell specimen).

3.2 Elongation. Distortion or change in shape in form of stretching (increasing the length or making longer). The elongation is a percentage of distances (between benchmarks) that includes both the un-stretched distance and that found at rupture. For Measurement 3410, elongation is more specifically defined as the permanent extension in the gauge length of a test specimen measured after rupture, and expressed as a percentage of the original gauge length. Ultimate elongation is the extension measured at the moment of rupture and expressed as a percentage of the original gauge length. For measurement 3410, the elongation measured is the ultimate elongation.



Source: https://assist.dla.mil -- Downloaded: 2016-12-31T21:01Z
Check the source to verify that this is the current version before use.

3.3 Median. When the numerical values for a given property are arranged in ascending or descending order, the median is obtained as follows:

a. When the number of values is odd, the median is the middle value in the series.

b. When the number of values is even, the median is the arithmetic average of the two middle values.

3.4 Tensile strength. Tensile strength is the maximum force per unit of the original cross-sectional area of the specimen which occurs while the specimen is stretched to rupture. It is calculated by dividing the maximum force by the original cross-sectional area.

4. Setup. The DUT (Device Under Test or dumbbell specimens) shall be prepared and setup in accordance with FED-STD-228, method 3021 and method 3031 and with the setup restrictions specified in 4.1 through 4.4.

4.1 Sample size. Unless otherwise specified, five (versus three) dumbbell specimens (from flat extruded jacket material) shall be setup and tested.

4.2 Dumbbell preparation.

4.2.1 Fabrication. Dumbbell specimens shall be prepared from flat extruded jacket material. The flat extruded jacket material dimensions shall permit cutting of dumbbells with a width at the reduced portion of 6.35 mm (.25 inch) and a width at the grip interface of 25 mm (1 inch).

4.2.2 Buffing. A material specimen that is too thick or uneven shall be buffed. Buffing shall occur before the material specimen is cut with a die to make the dumbbell specimens. An uneven surface is one that would prevent obtaining an accurate measurement of thickness or elongation. Also, buffing shall be performed to remove any glaze or coating that may interfere with grip performance or elongation measurement (optical or mechanical). Perform buffing using apparatus and procedure in accordance with method 3011 of FED-STD-228.

4.2.3 Alternative to buffing. As an alternative, shaving methods (such as planning or use of a skiving machine) will be allowed if it can be shown that the specific method will produce reduced thickness and remove surface unevenness in an equivalent or enhanced manner as the method cited in 4.2.2. Any alternative method must be approved by the qualifying activity. Shaving methods can have some enhanced performance properties over buffing (such as less heating of the test sample during the process).

4.2.4 Dumbbell thickness. The thickness of the dumbbell specimen shall not exceed 3.18 mm (.125 inch).

4.2.5 Dumbbell thickness measurement (see 5.1.1).

4.2.6 Distance between benchmarks. Benchmarks shall be placed on the reduced portion, equidistant from the center and perpendicular to the length (z axis where the x and y axes are in the cross sectional area of the thickness and width). Distance between benchmarks shall conform to table 3410-I for the die used. Unless otherwise specified, die sizes selected shall be one with a distance between benchmarks of 25 mm (1 inch). For qualification purposes, some form of benchmarks is to be placed on the dumbbell specimen (even if elongation apparatus such as a mechanical extensometer or optical scanning device is used).

4.3 Die size selection.

4.3.1 Dumbbell width at the reduced portion. Dumbbell selection shall account for a width at the reduced portion shall be 6.35 mm (.25 inch).

4.3.2 Exception to specified dumbbell width at the reduced portion. Allowance for a dumbbell with a width at the reduced portion of 3.17 mm (.125 inch) shall be permitted only when a narrow material specimen is used (versus flat extruded material). Only this one alternate width is allowed and only for cable jacket (not for flat extruded jacket material). If necessitated, allowance of a narrow material specimen is counter to and taking an exception to Measurement 3410. Approval for use of a narrow material specimen must be granted by the qualifying activity.



Source: https://assist.dla.mil -- Downloaded: 2016-12-31T21:01Z
Check the source to verify that this is the current version before use.

4.3.3 Dumbbell width measurement (see 5.1.2).

4.3.4 Selection of die size. Determination of the die selected shall be based on distance between benchmarks and on the reduced portion of dumbbell specimen width. The die selected shall be restricted to those listed in table 3410-I.

TABLE 3410-I. Die size selection.

| Distance between benchmarks (mm) | Distance between benchmarks (inch) | Width at reduced Portion (mm) | Width at reduced Portion (inch) | Die size in accordance with FED-STD-228 Method 3021 2/ | Equivalent die size in accordance with ASTM D412 |
|---|---|---|---|---|---|
| 25.00 ± .25 | 1.00 ± .01 | 3.17 | 0.125 | Die IV 1/ | Die D |
| 25.00 ± .25 | 1.00 ± .01 | 6.35 | 0.25 | Die III 3/ | Die C |
| 50 ± .5 | 2.00 ± .02 | 3.17 | 0.125 | Die V 1/ | Die E |
| 50 ± .5 | 2.00 ± .02 | 6.35 | 0.25 | Die II | Die B |

1/ If the piece of material tested is narrow (less than .25 inch width) and only if approved by the qualifying activity, then a test specimen with a 3.17 mm (.125 inch) reduced portion width may be used.
2/ Die III is the preferred die for this test.
3/ FED-STD-228 Die VII is acceptable also; however, there is no equivalent ASTM D412 Die.

4.4 Using die to cut test samples.

DANGER:
Die cutting surfaces are sharp.
Keep hands and loose clothing clear.

4.4.1 Maintenance of die cutting edge. Hone and touch up with honing stones as needed.

4.4.2 Determining die condition.

a. Die inspection. Observe the die-cutting edges (surface) and ensure the surface is free from nicks. If found, perform 4.4.1 as needed or replace die if unsuccessful.

b. Pre-tested dumbbell specimen inspection. Observe die-cut dumbbell specimens for ragged edges (due to nicks in the die-cutting edges). If found, replace dumbbell specimens and perform corrective action (see 4.4.2.a).

c. Tested dumbbell specimen inspection. Place multiple broken dumbbell specimens together. Rupture points consistently at the same place may indicate that the die is dull, nicked, or bent at that particular position. If found, perform 4.4.1 as needed or replace die if unsuccessful.

4.5 Placement in grips.

4.5.1 Jaw separation. The jaw separation length for the selected die size shall be the length listed in table 3410-II. The approximate clamping length for the selected jaw separation length is listed in table 3410-II for guidance. The approach used for these determined lengths are provided as an example in 6.2.

4.5.2 Clamping in grips. The dumbbell specimen shall be adjusted symmetrically so that the tension is distributed uniformly over the cross section. About two-thirds of the shouldered area of the dumbbell should be clamped in the grips.



Source: https://assist.dla.mil -- Downloaded: 2016-12-31T21:01Z
Check the source to verify that this is the current version before use.

TABLE 3410-II. Jaw separation length. 1/

| FED-STD-228 die size | III | IV | V | II | VII |
|---|---|---|---|---|---|
| ASTM 421 equivalent | C | D | E | B | 2/ |
| Length of 2 shoulders | 76 (3) | 64 (2.5) | 64 (2.5) | 76 (3) | 76 (3) |
| Clamping length per shoulder (approximate) | 25 (1) | 19 (.75) | 19 (.75) | 25 (1) | 25 (1) |
| Jaw separation length | 64 (2.5) | 64 (2.5) | 89 (3.5) | 89 (3.5) | 64 (2.5) |

1/ Values for parameters in table are in mm (inch).
2/ FED-STD-228 Die VII is acceptable also; however, there is no equivalent ASTM D412 die.

5. Test procedure. Both the tensile strength and the elongation shall be determined on the same dumbbell specimen at the same time.

5.1 Preliminary measures.

5.1.1 Thickness measurement at the reduced section. Perform in accordance with Method 1124 of FED-STD-228 using a micrometer with a resolution of 3 decimal places or more (.003 cm (.001 inch) or better). Determine the medium value (see appendix A).

a. Data. The thickness of each dumbbell specimen shall be measured in three equally spaced points along the length of the reduced section. Measurement shall be performed at the middle and near each end of the reduced section.

b. Medium thickness. Both minimum and average thickness is recorded; however, the medium thickness shall be used to calculate cross sectional area (where the latter is determined by width times the thickness).

c. Acceptable data. Dumbbell specimens in which the difference between the maximum and minimum thickness exceeds 0.075 mm (.003 inch) shall be discarded.

5.1.2 Width measurement at the reduced section. Perform measurement in same manner as done for the thickness measurement (determine medium value from data at three positions). Perform using measurement device with a resolution of 3 decimal places or more (.003 cm (.001 inch) or better). Determine the medium value (see appendix A).

a. Data. The width of each dumbbell specimen shall be measured in three equally spaced points along the length of the reduced section. Measurement shall be performed at the middle and near each end of the reduced section.

b. Medium width. The medium width shall be recorded and shall be used to calculate cross sectional area (where the latter is determined by width times the thickness).

c. Acceptable data. Dumbbell specimens in which the difference between the maximum and minimum width exceeds 0.075 mm (.003 inch) shall be discarded.

d. An alternate allowed width measurement shall be the distance between the cutting edges of the die; however, this width shall be measured in accordance with 5.1.2b. Width dimension must be verified if used as the dimension for the cross-sectional area calculation.



Source: https://assist.dla.mil -- Downloaded: 2016-12-31T21:01Z
Check the source to verify that this is the current version before use.

5.1.3 Cross sectional area calculation. Calculate the cross sectional area by multiplying the thickness at the reduced section by the width at the reduced section (see appendix A).

5.1.4 Calibration of testing machine. Testing machine shall be calibrated as a minimum to the degree specified in method 3016 of FED-STD-228. This calibration includes a minimum of three calibration points covering the range to be tested with a verified and traceable minimum accuracy of ± one percent of the force/stress measuring device. A similar calibration shall be performed for obtaining the distance in the elongation measurement when a mechanical extensometer or other measurement device is used.

5.2 Test synopsis.

5.2.1 Perform pre-test verifications and initializations:

a. Test is not performed until at least 30 minutes after pre-die cut specimen (flat extruded material) is buffed.

b. Dumbbell specimen is securely clamped.

c. Correct placement of dumbbell specimen in grips (Dumbbell is adjusted symmetrically so that the tension is distributed uniformly over the cross section),

d. Initialize distance between benchmarks on the elongation measuring device,

e. Jaw separation length is correct between the two grips.

f. Initialized the force/stress measurement device (set to zero or a preload value). Pre-load may be applied up to 13.3 N (3 pound) or as otherwise specified.

g. Input median thickness and width for each dumbbell specimen if measurement device performs automatic calculations for the tensile strength.

h. Input initial distance between benchmarks if measurement device performs automatic calculations for the elongation.

5.2.2 Apply a tensile load.

a. Apply at a rate of 25 ± 5 cm/minute (10 ± 2 inch/minute).

b. Measure applied load (force/stress) continuously during the test (as measurement system allows).

c. Measure distance between benchmarks continuously during the test while the load is applied (as measurement system allows).

d. Perform test (apply load) until rupture of the dumbbell specimen occurs.

5.2.3 Recorded values on the data sheet (see appendix A) include a through d below.

a. Thickness to 3 decimal places or more (0.003 cm (.001 inch) or better).

b. Width to 3 decimal places or more (0.003 cm (.001 inch) or better).

c. Applied load to a resolution of 1 percent of value or better if tensile strength measurement device does not automatically collect data, plot force versus distance and provide the tensile strength.

d. Gauge lengths at un-stretched distance and at rupture to the nearest 0.03 cm (.01 inch) or better if measuring device does not perform automatically and calculate the elongation.



Source: https://assist.dla.mil -- Downloaded: 2016-12-31T21:01Z
Check the source to verify that this is the current version before use.

5.2.4 Calculations performed on the data sheet (see appendix A) include a through c below.

a. Cross sectional area.

b. Tensile strength to at least 1 percent of value or better.

c. Elongation to at least 5 percent of value or better.

5.2.5 Perform 5.2.1 through 5.2.4 for each dumbbell specimen to be tested.

5.3 Data sheet. In addition to the items for the standard data sheet listed in Measurement Support Process 2201, the data sheet shall include the items listed in 5.3.a through 5.3.f.

a. Graph with curves for tensile force versus benchmark length if provided by measurement device.

b. Tabulation of values for elongation measurement and for calculated elongation if provided by measurement device.

c. Device used to apply force (such as a tensile test machine).

d. Device used to measure applied force (such as a load cell).

e. Device used to measure for elongation (distance of benchmarks, such as a mechanical extensometer).

f. Devices used to measure thickness and width at the reduced section of the dumbbell.

5.4 Verification. The checklist in appendix B is provided to ensure compliance for inspection purposes.

6. Notes.

6.1 Intents behind standardization efforts.

6.1.1 Multiple party testing considerations. The incentive to minimize test variables, resulting in a level playing field for multiple parties testing, leads the Government to establish a baseline. This baseline includes considerations for fabrication of test samples, methods to measure and use of specific test practices in addition to specifics for test sample configurations.

6.2 Clamping lengths in grips. For die size C, the clamping length should be approximately 1 inch. This length is obtained from length of shoulder area that should be clamped in the grips. About two-thirds of the shouldered area of the dumbbell should be clamped in the grips. The overall length of the dumbbell cut is 4.5 inch (using die size C) and the reduced (necked down) portion of the dumbbell is assumed to be 1.5 inch long (1.312 inch in reduced area + .188 inch transitions). Subtracting the two lengths of 1.5 from 4.5 leaves the lengths of the shoulders as 3 inch. Clamping 67 percent of the 3 inch shoulder length is 2 inch.

a. Resulting jaw separation length. If 1 inch of each shoulder is clamped, then the jaw separation length is 2.5 inches (4-1/2 – 2).

b. Die D. The clamping length should be 1 inch. Likewise for Die D, the length of the two shoulders is 2.5 inches, the clamping length per shoulder is 0.75 inch, and the resulting jaw separation length falls between 2.33 to 2.5 inches.

6.3 Reference standards. FED-STD-228 has been determined to be an adequate test standard to cite for obtaining the flat extruded material tensile strength and for obtaining the elongation at rupture. ASTM D412 is cited as dies are more commonly known under the ASTM designation. ASTM D412 is cited as a reference to provide further detail to the measurement process; however, some terminology, values specified for parameters and calculations (such as restrictions on cross sectional area) are different. UL 2556 Wire and Cable Test Methods is similar to FED-STD-228, but is not to be cited as an alternate or as a replacement for FED-STD-228. No effort was made to isolate, identify and cite differences between the commercial and the Federal standards.



Source: https://assist.dla.mil -- Downloaded: 2016-12-31T21:01Z
Check the source to verify that this is the current version before use.

MEASUREMENT 3410

APPENDIX A

SAMPLE DATA SHEET

CABLE JACKET TENSILE STRENGTH AND ELONGATION

DATA SHEET

CABLE JACKET TENSILE STRENGTH AND ELONGATION TEST (MET)

DUT description: _____
Item code: _____
Tested by: _____
Test date: _____

Thickness Measurement at the Reduced Section.

| Dumbbell specimen | At position end 1 | | At position middle | | At position end 2 | | Median | | Pass/ fail |
|---|---|---|---|---|---|---|---|---|---|
| | Inches | cm | Inches | cm | Inches | cm | Inches | cm | |
| 1 | | | | | | | | | |
| 2 | | | | | | | | | |
| 3 | | | | | | | | | |
| 4 | | | | | | | | | |
| 5 | | | | | | | | | |

1/ Dumbbell specimens in which the difference between the maximum and minimum thickness measured on one dumbbell specimen exceeds 0.075 mm (0.003 inch) shall be discarded.
2/ Record thickness measurements to three decimal places.

Width Measurement at the Reduced Section.

| Dumbbell specimen | At position end 1 | | At position middle | | At position end 2 | | Median | | Pass/ fail |
|---|---|---|---|---|---|---|---|---|---|
| | Inches | cm | Inches | cm | Inches | cm | Inches | cm | |
| 1 | | | | | | | | | |
| 2 | | | | | | | | | |
| 3 | | | | | | | | | |
| 4 | | | | | | | | | |
| 5 | | | | | | | | | |

1/ Dumbbell specimens in which the difference between the maximum and minimum width measured on one dumbbell specimen exceeds 0.075 mm (.003 inch) shall be discarded. Note that tolerance on the width of the die at the reduced section is +0.05/-0.00 mm (+.002/-.000 inch).
2/ Record width measurements to three decimal places.



Source: https://assist.dla.mil -- Downloaded: 2016-12-31T21:01Z
Check the source to verify that this is the current version before use.

APPENDIX B

Cross Sectional Area Calculation at the Reduced Section

| Dumbbell specimen | Median thickness | | Median width | | Cross-sectional area | |
|---|---|---|---|---|---|---|
| | Inches | cm | Inches | cm | $inches^2$ | $cm^2$ |
| 1 | | | | | | |
| 2 | | | | | | |
| 3 | | | | | | |
| 4 | | | | | | |
| 5 | | | | | | |

1/ Cross sectional area calculated is that of the un-stretched dumbbell specimen.
2/ Cross sectional area for each dumbbell specimen is calculated as the median width times the median thickness.

Measurements and Calculation for Tensile Strength

| Dumbbell specimen | Force at maximum | | Cross-sectional area | | Tensile strength at maximum | | Pass/ fail |
|---|---|---|---|---|---|---|---|
| | Pound | Newton | $inches^2$ | $cm^2$ | $lb/inch^2$ | $N/cm^2$) | |
| 1 | | | | | | | |
| 2 | | | | | | | |
| 3 | | | | | | | |
| 4 | | | | | | | |
| 5 | | | | | | | |

1/ Calculated tensile strength is the force at maximum divided by the cross-sectional area of the unstretched dumbbell specimen.

Measurements and Calculation for Elongation

| Dumbbell specimen | Original gauge length | | Gauge length at rupture | | Difference in Gauge length | | Elongation at rupture | | Pass/ Fail |
|---|---|---|---|---|---|---|---|---|---|
| | Inches | cm | Inches | cm | Inches | cm | % (English) | % (Metric) | |
| 1 | | | | | | | | | |
| 2 | | | | | | | | | |
| 3 | | | | | | | | | |
| 4 | | | | | | | | | |
| 5 | | | | | | | | | |

1/ Original gauge length is the distance between benchmarks on the un-stretched dumbbell specimen.
2/ Gauge length at rupture is the distance between benchmarks at the moment of rupture.
3/ Elongation at rupture can be determined in either English or Metric units of measure (depending upon measurement and calculation device). Both units of measure are shown in this table for completeness. Consistent unit of measure must be used throughout.
4/ Difference in gauge length is the original gauge length minus the gauge length at rupture.
5/ Elongation at rupture (in percent) is the difference in gauge length divided by the original gauge length, multiplying this result by 100.



Source: https://assist.dla.mil -- Downloaded: 2016-12-31T21:01Z
Check the source to verify that this is the current version before use.

APPENDIX B

MINIMUM ESSENTIAL CHECKLIST FOR CABLE JACKET TENSILE STRENGTH AND ELONGATION MEASUREMENTS

B.1 Purpose. This appendix addresses a checklist of the minimum essentials for the cable jacket tensile strength and elongation measurement.

B.2 Usage. Table B-I is the checklist of minimum essentials for Government auditors, or their representatives, use during inspections. This checklist should be expanded at the auditor's discretion.

TABLE B-I. Minimum essential checklist for tensile strength and elongation measurements.

| Item | Category | Item | Requirement | Compliance |
|---|---|---|---|---|
| 1 | Test sample configuration | Flat extruded material: Cable | Five dumbbell specimens | |
| 2 | Room ambient environmental condition | Standard ambient (if test equipment built to operate in this range, if not-then controlled ambient) | 23 ± 5°C/73 ± 9°F and 20 to 70 percent RH. | |
| | | Controlled ambient | 23 ± 2°C/73 ± 4°F and 45 to 55 percent RH. | |
| 3 | Physical and mechanical measurements | Measurement device resolution | Thickness: micrometer with a resolution of 3 decimal places (.003 cm (.001 inch). | |
| | | | Width: measure with a resolution of 3 decimal places (.003 cm (.001 inch). | |
| | | | Distance between benchmarks: measure with a resolution of 0.03 cm (.01 inch). | |
| | | | Force (applied load): ± 1 percent of value. | |
| 4 | Prepare dumbbell specimens | Die | Selection: FED-STD-228, method 3021 Die III or equivalent ASTM D412 Die C (unless otherwise specified, see table 3410-I). | |
| | | | Maintenance. Maintain to retain sharp die-cutting edge. Hone and touch up with honing stones as needed. | |



Source: https://assist.dla.mil -- Downloaded: 2016-12-31T21:01Z
Check the source to verify that this is the current version before use.

TABLE B-I. Minimum essential checklist for tensile strength and elongation measurements - Continued.

| Item | Category | Item | Requirement | Compliance |
|---|---|---|---|---|
| 4 | Prepare dumbbell specimens | Die | Inspection: Verify die-cutting edge is free of nicks, pre-test dumbbell specimens are free of ragged edges, posttest multiple dumbbell specimens placed together not consistently ruptured in same place. | |
| | | | Corrective action: If not free or ruptured in same place, then hone or replace die, as needed. | |
| | | Buffing | Perform on flat extruded jacket material before cutting dumbbell in die. | |
| | | | Buff if too thick, surface uneven, to remove glaze or coating that interferes with grip performance or elongation measurement. | |
| | Test equipment | | | |
| 5 | Testing machine | Range | Applied force and elongation measurements are less than 85 percent and greater than 15 percent of testing machine measurement range. | |
| | | Calibration | Force: 1>= 1 percent of value<br>Tensile strength: >= 1 percent of value.<br>Length/distance: >= 0.03 cm (.01 inch).<br>Elongation: >= 5 percent of value. | |
| | | Clamping capability | General. Grips maintain uniform pressure across gripping surfaces. Grip separation can accommodate dumbbell specimen length.<br>Mechanical grips. Grips tighten as load increases.<br>Pneumatic/hydraulic grips. Grips maintain a consistent pressure as load increases. | |
| | | Length initialization and resolution | Establish distance between benchmarks to within ±.009 cm (±.003 inch) and measure continuously to 0.3 cm (.1 inch). | |



Source: https://assist.dla.mil -- Downloaded: 2016-12-31T21:01Z
Check the source to verify that this is the current version before use.

TABLE B-I. Minimum essential checklist for tensile strength and elongation measurements - Continued.

| Item | Category | Item | Requirement | Compliance |
|---|---|---|---|---|
| 6 | Measurement device | Automated measurements (if part of testing machine) | Verify calculations for cross sectional area, tensile strength and elongation are consistent with measurement 3410. Plots for force versus distance and tabulations for elongation provided. | |
| 7 | Examinations | Thickness measurement | Each dumbbell specimen shall be measured in three equally spaced points along the length of the reduced section. | |
| | | | Measurement performed at the middle and near each end of the reduced section | |
| | | | Discard dumbbell specimens in which the difference between the maximum and minimum thickness exceeds 0.075 mm (.003 inch). | |
| | | Width measurement | Each dumbbell specimen shall be measured in three equally spaced points along the length of the reduced section. | |
| | | | Measurement performed at the middle and near each end of the reduced section. | |
| | | | Discard dumbbell specimens in which the difference between the maximum and minimum thickness exceeds 0.075 mm (.003 inch). | |
| | | Preliminary calculations | Calculate cross sectional area by medium width times medium thickness. | |



Source: https://assist.dla.mil -- Downloaded: 2016-12-31T21:01Z
Check the source to verify that this is the current version before use.

TABLE B-I. Minimum essential checklist for tensile strength and elongation measurements - Continued.

| Item | Category | Item | Requirement | Compliance |
|---|---|---|---|---|
| 8 | Test | Pre-test verifications and initializations | Test is not performed until at least 30 minutes after pre-die cut specimen (flat extruded jacket material) is buffed. | |
| | | | Dumbbell specimen is securely clamped. | |
| | | | Correct placement of dumbbell specimen in grips (Dumbbell is adjusted symmetrically so that the tension is distributed uniformly over the cross section). | |
| | | | Initialize distance between benchmarks on the elongation measuring device. | |
| | | | Jaw separation length is correct between the two grips. | |
| | | | Initialized the force/stress measurement device (set to zero or a preload value). Pre-load may be applied up to 13.3 N (3 lb) or as otherwise specified. | |
| | | | Input median thickness and width for each dumbbell specimen if measurement device performs automatic calculations for the tensile strength. | |
| | | | Input initial distance between benchmarks if measurement device performs automatic calculations for the elongation. | |
| 8 | Test | Apply a tensile load | Apply at a rate of 25 ± 5 cm/minute (10 ± 2 inch/minute). | |
| | | | Measure applied load (force/stress) continuously during the test (as measurement system allows). | |
| | | | Measure distance between benchmarks continuously during the test while the load is applied (as measurement system allows). | |
| | | | Perform test (apply load) until rupture of the dumbbell specimen occurs. | |
| | | Record values on data sheet (see appendix A) | Thickness to 3 decimal places or more (.003 cm (.001 inch) or better). | |
| | | | Width to 3 decimal places or more (.003 cm (.001 inch) or better). | |
| | | | Applied load to a resolution of 1 percent of value or better if tensile strength measurement device does not automatically collect data, plot force versus distance and provide the tensile strength. | |
| | | | Gage lengths at un-stretched distance and at rupture to the nearest 0.03 cm (.01 inch) or better if measuring device does not perform automatically and calculate the elongation. | |
| | | Perform calculations – if not done automatically | Cross sectional area.<br>Tensile strength.<br>Elongation. | |



Source: https://assist.dla.mil -- Downloaded: 2016-12-31T21:01Z
Check the source to verify that this is the current version before use.

TABLE B-I. Minimum essential checklist for tensile strength and elongation measurements - Continued.

| Item | Category | Item | Requirement | Compliance |
|---|---|---|---|---|
| 9 | Data sheet | Added data sheet requirement (in addition to those listed for the standard data sheet in Measurement Support Process 2201) | Graph with curves for tensile force versus benchmark length if provided by measurement device. | |
| | | | Tabulation of values for elongation measurement and for calculated elongation if provided by measurement device. | |
| | | | Device used to apply force (such as a tensile test machine). | |
| | | | Device used to measure applied force (such as a load cell). | |
| | | | Device used to measure for elongation (distance of benchmarks – such as a mechanical extensometer). | |
| | | | Devices used to measure thickness and width at the reduced section of the dumbbell. | |
| 10 | Pass/fail criteria | Proper criteria implemented | Test operators knows if fail and to verify result. | |

B.3 Notes.

B.3.1 Intended use.

B.3.1.1 Audit team. This checklist is intended to assist Government auditors or their representatives during inspections. This checklist may be augmented at the auditor's discretion; however, it is not to be reduced.

B.3.1.2 Test laboratories. When test laboratories prepare to perform cable jacket strength and elongation measurements or audits, this checklist should be used to supplement Measurement 3410, not replace it.



Source: https://assist.dla.mil -- Downloaded: 2016-12-31T21:01Z
Check the source to verify that this is the current version before use.

CONCLUDING MATERIAL

Custodians:
Army - CR
Navy - SH
Air Force - 85
DLA - CC

Preparing activity:
DLA - CC

(Project 60GP-2013-002)

Review activities:
Air Force - 99

NOTE: The activities listed above were interested in this document as of the date of this document. Since organizations and responsibilities can change, you should verify the currency of the information above using the ASSIST Online database at https://assist.dla.mil.



Source: https://assist.dla.mil -- Downloaded: 2016-12-31T21:01Z
Check the source to verify that this is the current version before use.