INCH-POUND

MIL-STD-633G
30 MAY 2013

SUPERSEDING
MIL-STD-633F
21 June 2012

DEPARTMENT OF DEFENSE
INTERFACE STANDARD

STANDARD FAMILY OF MOBILE ELECTRIC POWER GENERATING SOURCES

GENERAL DESCRIPTION INFORMATION
AND
CHARACTERISTIC DATA

REINSTATED AFTER JUNE 21, 2012 AND MAY BE USED FOR NEW ACQUISITIONS AND EXISTING DESIGNS AND ACQUISITIONS

AMSC N/A FSC 6115

Source: https://assist.dla.mil -- Downloaded: 2016-12-11T08:30Z
Check the source to verify that this is the current version before use.

FOREWORD

1. This standard is approved for use by the Departments and Agencies of the Department of Defense.

2. This Military Standard provides interface and technical information on standard mobile electric power sources for use by all Departments and Agencies of the Department of Defense (DoD).

3. Preparation of this document has been authorized by the Department of Defense Directive 4120.11, Standardization of Mobile Electric Power (MEP) Generating Sources, April 13, 2004, which assigns to the Project Manager, Mobile Electric Power (PM-MEP) the responsibility for establishing the Department of Defense Standard Family of Mobile Electric Power Generating Sources (MEPGS).

The following are extracts from DoD Directive 4120.11: (Additional information on this policy can be found at: http://www.dtic.mil/whs/directives/corres/pdf/412011p.pdf).

"4. POLICY

4.1. It is DoD policy to:

4.1.1. Establish, maintain, and provide a DoD standard family of MEP generating Sources for maximum use by DoD Components.

4.2. In designing and developing end items and systems requiring electric power from MEP generating sources, the DoD Components shall consider the characteristics and suitability of the DoD standard family of MEP generating sources, as defined in reference (b) and MIL-STD-1332 (reference (c)).

4.3. When MEP generating sources are designed in, and procured as, an integral part of an end item or system, the current DoD standard MEP generating sources in reference (b) shall be used to the maximum extent practicable.

4.4. The DoD Components requiring MEP generating sources other than those available in the standard family shall so advise and obtain approval from the PM-MEP before starting procurement. The PM-MEP shall expedite action on such requests, as described in Note 9 of Appendix B in Subpart 208.7000(a) of the DFARS (reference (d))."

4. The DoD Standard Family of Mobile Electric Power Generating Sources (MEPGS) has been designed to comply with DoD Directive 4140.25, Subject: DoD Management Policy for Energy Commodities and Related Services. Directive 4140.25 establishes DoD bulk Petroleum Management Policy. (Additional information on this policy can be found at: http://www.dtic.mil/whs/directives/corres/pdf/414025p.pdf) The fuel standardization policy, paragraph 4.2 of the DOD Directive 4140.25, follows:

Source: https://assist.dla.mil -- Downloaded: 2016-12-11T08:30Z
Check the source to verify that this is the current version before use.

"4.2. Fuel Standardization. The Combatant Commanders shall develop plans to minimize the types of fuels required in joint operations. The Military Services shall design and procure weapon systems, support equipment, and vehicles. The Military Services shall also qualify new systems to use readily available commercial-type fuels. Standard fuels approved by the Defense Standardization Program are listed in the Department of Defense Index of Standards and Specifications Federal Supply Group 91. Primary fuel support for land-based air and ground forces in all theaters (overseas and in the Continental United States) shall be accomplished using a single kerosene-based fuel, in order of precedence: JP-8, commercial jet fuel (with additive package), or commercial jet fuel (without additives), as approved by the Combatant Commander. Fuel support for ground forces may also be accomplished using commercially available diesel fuel when supplying jet fuel is not practicable or cost effective. Primary fuel support for sea-based aircraft shall be a high-flash kerosene-based fuel, designated JP-5. In overseas theaters where the predominant fuel requirement is in support of the Navy, JP-5 may be substituted for JP-8, as approved by the Combatant Commander. Conventionally powered ships shall use a distillate-type fuel, designated F-76 for propulsion. Military Sealift ships may use commercial marine fuels for propulsion. The type of fuel designated for the battlefield shall be specified by the Combatant Commander depending on fuel availability and equipment to be used within the theater. To the maximum extent practical, no new combat support or combat service support equipment or vehicles requiring gasoline-type fuels shall be acquired or developed unless the support concept is to supply fuel as a packaged product."

5. Comments, suggestions, or questions on this document should be addressed to: DEPARTMENT OF THE ARMY, DOD Project Manager, Mobile Electric Power, 5850 Delafield Road, Bldg 324, Fort Belvoir, VA 22060-5809. Phone: (703) 704-3162, DSN 654-3162. Fax:(703)704-3257, DSN: 654-3257. Website: http://www.pm-mep.army.mil , Email: See website. Since contact information can change, you may want to verify the currency of this address information using the ASSIST on line database at: https://assist.dla.mil.

Source: https://assist.dla.mil -- Downloaded: 2016-12-11T08:30Z
Check the source to verify that this is the current version before use.

TABLE OF CONTENTS

TABLE OF CONTENTS iv

1. SCOPE 1

1.1 Scope 1
1.2 Applicability 1

2. APPLICABLE DOCUMENTS 1

2.1 General 1
2.2 Government documents 1
2.2.1 Other Government publications 2

3. DEFINITIONS 3

3.1 General 3
3.2 Acronyms used in this standard 3
3.3 Accessory box 5
3.4 Ancillary equipment 5
3.5 Bandwidth 5
3.6 Camouflage pattern 5
3.7 Chemical Agent Resistant Coating (CARC) 5
3.8 Classification 5
3.8.1 Type 5
3.8.1.1 Type I - Tactical 5
3.8.1.2 Type II - Prime 5
3.8.2 Class 6
3.8.2.1 Class 1 - Precise 6
3.8.2.2 Class 2 - Utility 6
3.8.3 Mode 6
3.8.3.1 Mode I 6
3.8.3.2 Mode II 6
3.8.3.3 Mode III 6
3.8.3.4 Mode IV 6
3.9 Deviation factor 6

Source: https://assist.dla.mil -- Downloaded: 2016-12-11T08:30Z
Check the source to verify that this is the current version before use.

3.10 Dip 6
3.11 Failure 6
3.11.1 Relevant failure 6
3.11.2 Non-relevant failures 6
3.12 Harmonic 7
3.13 Hertz (Hz) 7
3.14 Line Item Number (LIN) 7
3.15 Mean Time Between Failure (MTBF) 7
3.16 Mobile Electric Power Generating Sources (MEPGS) 7
3.17 Observed steady-state band 7
3.18 Overshoot 7
3.19 Paralleling 7
3.20 Phase balance voltage 8
3.21 Power Factor (PF) 8
3.22 Power Units/Power Plants 8
3.22.1 Power Plant (PP) 8
3.22.2 Power Unit (PU) 8
3.22.3 Trailer chassis 8
3.23 Primary Inventory Control Activity (PICA) 8
3.24 Rated load 8
3.25 Reconnectable generator set 8
3.26 Recovery time 8
3.27 Regulation 8
3.28 Ripple voltage 8
3.29 Rise 8
3.30 Stability 9
3.31 Steady-State 9
3.32 Type Classified for Army use 9
3.33 Undershoot 9
3.34 Voltage modulation 9

4. GENERAL REQUIREMENTS 9

4.1 Performance 9
4.1.1 Noise 9

Source: https://assist.dla.mil -- Downloaded: 2016-12-11T08:30Z
Check the source to verify that this is the current version before use.

4.1.2 Environment 9
4.1.3 Altitude 9
4.1.4 Electrical performance 10
4.1.5 Inclined operation 10
4.1.6 Fuels, lubricants, and coolants 10
4.1.7 Protective devices 10
4.1.8 Maintenance during operation 10
4.1.9 Camouflage nets 10
4.1.10 Storage 10
4.1.11 Preventive Maintenance Checks and Services (PMCS) 10
4.1.12 Fuel capacity 10
4.1.13 Auxiliary fuel system. 10
4.1.14 Supportability 11
4.1.15 Starting system 11
4.1.16 NATO slave receptacle 11
4.1.17 Instrumentation 11
4.1.18 Adjustments 11
4.1.19 Parallel operation 11
4.1.20 High Altitude Electromagnetic Pulse (HAEMP) 11
4.1.21 Electromagnetic Interference (EMI) 11
4.1.22 Transportability 11
4.1.23 Reliability, Availability, Maintainability (RAM) 12
4.2 Service Specific Power Distribution Systems 12
4.2.1 Army Supported Power Distribution and Illumination System, Electrical (PDISE) 12
4.2.1.1 Feeder Systems 12
4.2.1.2 Distribution Systems 12
4.2.1.2.1 M40 Distribution System 12
4.2.1.2.2 M60 Distribution System 12
4.2.1.2.3 Utility Receptacle and Illumination Kit 12
4.2.1.2.4 Power Distribution System, Electrical (PDISE) Interface 12
4.2.1.2.5 PDISE implementation 12
4.2.1.2.6 Voltage drop considerations for the Army Supported PDISE 14

Source: https://assist.dla.mil -- Downloaded: 2016-12-11T08:30Z
Check the source to verify that this is the current version before use.

4.2.1.2.7 Phase balance for the Army Supported PDISE 14
4.2.1.2.8 Universal Adapter for the Army Supported PDISE 14
4.2.2 Marine Supported Power Distribution Box (PDB) 14
4.2.3 Navy Supported Power Distribution Systems 14
4.2.4 Interfaces 14
4.2.4.1 Electrical Interface 14
4.2.4.2 Convenience receptacle 15
4.2.4.3 Trailer interface 15
4.2.4.4 Primary fuel interface 15
4.2.4.5 Auxiliary fuel interface 15
4.2.5 Human interface 15
4.2.6 Logistical interface 15
4.2.7 Dimensions and weight 15
4.2.8 Camouflage nets 15
4.2.9 Exhaust outlet 15
4.2.10 Safety 15
4.2.10.1 Grounding 15
4.2.10.2 Fire Protection 15
4.2.10.3 Noise Protection 15
4.3 Delivered condition 16
4.3.1 Finish 16
4.3.2 Skid Mounted MEPGS 16
4.3.2.1 Safety items 16
4.3.2.2 Batteries 16
4.3.2.3 Auxiliary fuel line 16
4.3.2.4 Starting aids 18
4.3.2.5 Paralleling cables 18
4.3.3 Power Units/Power Plants (PU/PP) 18
4.3.3.1 Power Units 18
4.3.3.2 Power Plants 18
5. DETAILED REQUIREMENTS. 18

Source: https://assist.dla.mil -- Downloaded: 2016-12-11T08:30Z
Check the source to verify that this is the current version before use.

5.1 DoD Standard Family of Mobile Electric Power Generating Sources 18
5.2 Service Specific Power Distribution Systems..... 19
5.2.1 Army Supported Power Distribution Illumination Systems, Electrical (PDISE) 19
5.2.2 Marine Supported Power Distribution Box (PDB) 20
5.2.3 Navy Supported Power Distribution Systems..... 20
5.3 Parametric values 20
5.4 Technical Data Packages 20

6. ITEMS OF NOTE 21

6.1 Intended use 21
6.2 Acquisition requirements 21
6.3 National Stock Numbers (NSN) 21
6.4 MEPGS availability 21
6.5 MEPGS Development Program 21
6.6 Items not Army Type-Classified..... 21
6.7 Non-procurable MEPGS 22
6.8 Subject term (key word) listing..... 22

A.1 SCOPE 23

A.1.1 Scope..... 23

A.2 GENERAL DESCRIPTIONS..... 23

A.2.1 Item Descriptions. 23
A.2.1.1 Military Tactical Generator (MTG) 23
A.2.1.2 Advanced Medium Mobile Power Sources 23
A.2.1.3 Tactical Quiet Generator (TQG) 23
A.2.1.4 Deployable Power Generation and Distribution System (DPGDS)..... 23
A.2.1.5 Trailers 23

A.3 DETAILED DESCRIPTIONS..... 23

A.3.1 Detailed descriptions..... 23
A.3.1.1 Military Tactical Generator Set, DED, 2 kW..... 26
A.3.1.2 Tactical Quiet Generator Set, DED, 3 kW..... 28
A.3.1.3 Advanced Medium Mobile Power Sources (AMMPS), DED 5 kW 32
A.3.1.4 Advanced Medium Mobile Power Sources (AMMPS), DED 10 kW 38

Source: https://assist.dla.mil -- Downloaded: 2016-12-11T08:30Z
Check the source to verify that this is the current version before use.

A.3.1.5 Advanced Medium Mobile Power Sources (AMMPS), DED 15 kW 43
A.3.1.6 Advanced Medium Mobile Power Sources (AMMPS), DED 30 kW 52
A.3.1.7 Advanced Medium Mobile Power Sources (AMMPS), DED 60 kW 60
A.3.1.8 Tactical Quiet Generator Set, DED, 100 kW 70
A.3.1.9 Tactical Quiet Generator Set, DED, 200 kW 74

B.1 SCOPE 77

B.1.1 Scope 77
B.1.2 Appendix organization 77

B.2 DETAILED DESCRIPTIONS 77

B.2.1 Detailed Descriptions 78
B.2.1.1 PDISE, 200 Amp per Phase Feeder System - 3 Phase 79
B.2.1.2 PDISE, 100 Amp per Phase Feeder System - 3 Phase 81
B.2.1.3 PDISE, 40 Amp per Phase Distribution System - 3 Phase 83
B.2.1.4 60 Amp Distribution System - Single Phase 85
B.2.1.5 Utility Receptacles and Lighting Set 87
B.2.1.6 Universal Adapter 89
B.2.1.7 MEPDIS-R – 5kW Outdoor PDB 90
B.2.1.8 MEPDIS-R – 5kW Indoor PDB 92
B.2.1.9 MEPDIS-R – 15kW PDB 94
B.2.1.10 MEPDIS-R – 30kW PDB 96
B.2.1.11 MEPDIS-R – 100 kW PDB 98
B.2.1.12 MEPDIS-R – 300 kW PDB 100
B.2.1.13 Assembly 30208 102
B.2.1.14 Assembly 30209 104
B.2.1.15 Assembly 30030 106
B.2.1.16 Assembly 30133 108
B.2.1.17 Assembly 30211 109
B.2.1.18 Assembly 32600 111
B.2.1.19 PPD Box 200 Amp (60kW) 113

C.1 SCOPE 115

C.1.1 Scope 115

Source: https://assist.dla.mil -- Downloaded: 2016-12-11T08:30Z
Check the source to verify that this is the current version before use.

C.2 DEFINITIONS 116

C.2.1 Auxiliary Power Unit (APU) 116
C.2.2 Aircraft Ground Support Unit 116
C.2.3 Distribution Illumination Systems, Electrical (DISE) 116

C.3 DETAILED DESCRIPTIONS 116

C.3.1 Detailed Descriptions 117
C.3.1.1 TQG, 3kW, 60 Hz Mounted on M116A3 Trailer 118
C.3.1.2 Tactical Quiet Generator Set, DED, 5 kW 120
C.3.1.3 TQG, 5kW, 60 Hz Mounted on M116A3 Trailer 126
C.3.1.4 Auxiliary Power Unit (APU), DED, 5 kW, 28 VDC 128
C.3.1.5 Tactical Quiet Generator Set, DED, 10 kW 130
C.3.1.6 Auxiliary Power Unit, DED, 10 kW, 60 Hz. (Not Separately Type Classified) ... 138
C.3.1.7 Tactical Quiet Generator Set, DED, 15 kW 140
C.3.1.8 TQG Generator Set, DED, Skid Mounted, 15 kW 148
C.3.1.9 Tactical Quiet Generator Set, DED, 30 kW 157
C.3.1.10 TQG Generator Set, DED, 30 kW 163
C.3.1.11 Tactical Quiet Generator Set, DED, 60 kW 168
C.3.1.12 TQG Generator Set, DED, 60kW 176
C.3.1.13 DPGDS, 750 kW, 50/60Hz 183
C.3.1.14 DPGDS, DED, 750 kW 185
C.3.1.15 DISE, 200 Amp per Phase Feeder System - 3 Phase 187
C.3.1.16 DISE, 100 Amp per Phase Feeder System - 3 Phase 188
C.3.1.17 DISE, 40 Amp per Phase Distribution System - 3 Phase 189
C.3.1.18 DISE, 60 Amp Distribution System - Single Phase 190
C.3.1.19 DISE/PDISE, Utility Receptacles and Lighting Set 191

CONCLUDING MATERIAL 192

FIGURES

FIGURE 1 Sample of a possible distribution arrangement 14
FIGURE 2 Auxiliary Fuel Hose Assembly Drawing 17

FIGURE A- 1 Military Tactical Generator Set, 2 kW 27

Source: https://assist.dla.mil -- Downloaded: 2016-12-11T08:30Z
Check the source to verify that this is the current version before use.

FIGURE A- 2 Tactical Quiet Generator Set, 3 kW 29
FIGURE A- 3 PP-AN/MJQ-42 - TQG Power Plant, 3 kW, 60 Hz 30
FIGURE A- 4 PP-AN/MJQ-43A - TQG Power Plant, 3 kW, 60 Hz 31
FIGURE A- 5 AMMPS Generator Set, 5 kW 33
FIGURE A- 6 PU-2001 - AMMPS Power Unit, 5 kW, 60 Hz 34
FIGURE A- 7 PP-3001 - AMMPS Power Plant, 5 kW, 60 Hz 35
FIGURE A- 8 PP-3101 - AMMPS Power Plant, 5 kW, 60 Hz 37
FIGURE A- 9 AMMPS Generator Set, 10 kW 39
FIGURE A- 10 PU-2002 - AMMPS Power Unit, 10 kW, 50/60 Hz 40
FIGURE A- 11 PU-2012 - AMMPS Power Unit, 10 kW, 400 Hz 41
FIGURE A- 12 PP-3102 - AMMPS Power Plant, 10 kW, 50/60 Hz 42
FIGURE A- 13 AMMPS Generator Set, 15 kW 44
FIGURE A- 14 PU-2003 - AMMPS Power Unit, 15 kW, 50/60 Hz 45
FIGURE A- 15 PU-2101 - AMMPS Power Unit, 15 kW, 50/60 Hz 46
FIGURE A- 16 PU-2111 - AMMPS Power Unit, 15 kW, 400 Hz 48
FIGURE A- 17 PP-3003 - AMMPS Power Plant, 15 kW, 50/60 Hz 50
FIGURE A- 18 AMMPS Generator Set, 30 kW 53
FIGURE A- 19 PU-2102 - AMMPS Power Unit, 30 kW, 50/60 Hz 54
FIGURE A- 20 PU-2112 - AMMPS Power Unit, 30 kW, 400 Hz 56
FIGURE A- 21 PP-3105 - AMMPS Power Plant, 30 kW, 50/60 Hz 58
FIGURE A- 22 AMMPS Generator Set, 60 kW 61
FIGURE A- 23 PU-2103 - AMMPS Power Unit, 60 kW, 50/60 Hz 62
FIGURE A- 24 PU-2113 - AMMPS Power Unit, 60 kW, 400 Hz 63
FIGURE A- 25 PP-3106 - AMMPS Power Plant, 60 kW, 50/60 Hz 64
FIGURE A- 26 PP-3206 - AMMPS Power Plant, 60 kW, 50/60 Hz 66
FIGURE A- 27 PP-3216 - AMMPS Power Plant, 60 kW, 400 Hz 68
FIGURE A- 28 Tactical Quiet Generator Set, DED, 100 kW, 50/60 Hz 71
FIGURE A- 29 PU-807A - TQG Power Unit, 100 kW, 50/60 Hz 72
FIGURE A- 30 Tactical Quiet Generator Set, DED, 200 kW 75
FIGURE A- 31 PU-809A - TQG Power Unit, 200 kW, 50/60 Hz 76

FIGURE B- 1 PDISE, M200 Configuration 79
FIGURE B- 2 PDISE, M200 Components 80

Source: https://assist.dla.mil -- Downloaded: 2016-12-11T08:30Z
Check the source to verify that this is the current version before use.

FIGURE B- 3 PDISE, M100 Configuration 81
FIGURE B- 4 PDISE, M100 Components 82
FIGURE B- 5 PDISE, M40 Electrical Feeder Center 83
FIGURE B- 6 PDISE, M40 Components 84
FIGURE B- 7 PDISE, M60 Electrical Distribution System 85
FIGURE B- 8 PDISE, M60 Components 86
FIGURE B- 9 PDISE, M46 87
FIGURE B- 10 PDISE, M46 Components 88
FIGURE B- 11 Universal Adapter 89
FIGURE B- 12 5kW Outdoor PDB Configuration 90
FIGURE B- 13 MEPDIS-R 5kW Outdoor PDB Components 91
FIGURE B- 14 5kW Indoor PDB Configuration 92
FIGURE B- 15 MEPDIS-R 5kW Indoor PDB Components 93
FIGURE B- 16 15kW PDB Configuration 94
FIGURE B- 17 MEPDIS-R 15kW PDB Components 95
FIGURE B- 18 30kW PDB Configuration 96
FIGURE B- 19 MEPDIS-R 30kW PDB Components 97
FIGURE B- 20 100 PDB Configuration 98
FIGURE B- 21 MEPDIS-R 100 kW PDB Components 99
FIGURE B- 22 300kW PDB Configuration 100
FIGURE B- 23 MEPDIS-R 300kW PDB Components 101
FIGURE B- 24 The 150kW, 15kVA, Power Distribution Panel Configuration 102
FIGURE B- 25 Assembly 30208 Components 103
FIGURE B- 26 150KW, 30KVA Power Distribution Panel 104
FIGURE B- 27 Assembly 30209 Components 105
FIGURE B- 28 200 Amps Power Distribution Unit 106
FIGURE B- 29 Assembly 30030 Components 107
FIGURE B- 30 Distribution Center Portable 208Y/120V 60 Amp (15kW) 108
FIGURE B- 31 10KW, 208/120V 30A Portable Power Distribution Panel 109
FIGURE B- 32 Assembly 30211 Components 110
FIGURE B- 33 120kW Power Distribution Panel 111
FIGURE B- 34 Assembly 32600 Components 112
FIGURE B- 35 Distribution Center Portable 208Y/120V 200 Amp (60kW) 113

Source: https://assist.dla.mil -- Downloaded: 2016-12-11T08:30Z
Check the source to verify that this is the current version before use.

FIGURE B- 36 Panel Power Distr 60 kW Components 114

FIGURE C- 1 PP-AN/MJQ-42 - Tactical Quiet Power Plant 3 kW, 60 Hz 118
FIGURE C- 2 PP-AN/MJQ-43 - Tactical Quiet Power Plant, 3 kW, 60 Hz 119
FIGURE C- 3 Tactical Quiet Generator Set, 5 kW 121
FIGURE C- 4 PU-797A - TQG Power Unit, 5 kW, 60 Hz 122
FIGURE C- 5 PP-AN/MJQ-35A - TQG Power Plant, 5 kW, 60 Hz 123
FIGURE C- 6 PP-AN/MJQ-36 - TQG Power Plant, 5 kW 60 Hz 124
FIGURE C- 7 PU-797 - TQG Power Unit, 60 Hz 126
FIGURE C- 8 PP-AN/MJQ-35 - TQG Power Plant, 5 kW, 60 Hz 127
FIGURE C- 9 Auxiliary Power Unit, DED, 5 kW, 28 VDC 129
FIGURE C- 10 Tactical Quiet Generator Set, 10 kW 131
FIGURE C- 11 PU-798A - TQG Power Unit, 10 kW, 60 Hz 132
FIGURE C- 12 PU-799A - TQG Power Unit, 10 kW, 400 Hz 133
FIGURE C- 13 PP-AN/MJQ-37 - TQG Power Plant, 10 kW, 60 Hz 134
FIGURE C- 14 PP-AN/MJQ-38 - TQG Power Plant, 10 kW, 400 Hz 135
FIGURE C- 15 PU-798 - TQG Power Unit, 10 kW, 60 Hz 136
FIGURE C- 16 PU-799 - TQG Power Unit, 10 kW, 400 Hz 137
FIGURE C- 17 Auxiliary Power Unit (APU), DED, 10 kW, 60 Hz 139
FIGURE C- 18 Tactical Quiet Generator Set, 15 kW 141
FIGURE C- 19 PU-800A - TQG Power Unit, 15 kW, 400 Hz 142
FIGURE C- 20 PU-801B - TQG Power Unit, 15 kW, 50/60 Hz 143
FIGURE C- 21 PU-802A - TQG Power Unit, 15 kW, 50/60 Hz 144
FIGURE C- 22 PP-AN/MJQ-39B - TQG Power Plant, 15 kW, 400 Hz 145
FIGURE C- 23 PP-AN/MJQ-48B - TQG Power Plant, 15 kW, 50/60 Hz 146
FIGURE C- 24 TQG Generator Set, DED, 15 kW 149
FIGURE C- 25 PU-800 - TQG Power Unit, 15 kW, 400 Hz 150
FIGURE C- 26 PU-801 - TQG Power Unit, 15 kW, 50/60 Hz 151
FIGURE C- 27 PU-801A - TQG Power Unit, 15 kW, 50/60 Hz 152
FIGURE C- 28 PU-802 - TQG Power Unit, 15 kW, 50/60 Hz 153
FIGURE C- 29 PP-AN/MJQ-39 - TQG Power Plant, 15 kW, 400 Hz 154
FIGURE C- 30 PP-AN/MJQ-48 - TQG Power Plant, 15 kW, 50/60 Hz 155
FIGURE C- 31 PP-AN/MJQ-48A - TQG Power Plant, 15 kW, 50/60 Hz 156

Source: https://assist.dla.mil -- Downloaded: 2016-12-11T08:30Z
Check the source to verify that this is the current version before use.

FIGURE C- 32 Tactical Quiet Generator Set, 30 kW (re-engine) 158
FIGURE C- 33 PU-803B - TQG Power Unit, 30 kW, 50/60 Hz 159
FIGURE C- 34 PU-804B - TQG Power Unit, 30 kW, 400 Hz 160
FIGURE C- 35 PP-AN/MJQ-40B - TQG Power Plant, 30 kW, 50/60 Hz 161
FIGURE C- 36 TQG Generator Set, DED, 30 kW 164
FIGURE C- 37 PU-803 - TQG Power Unit, DED, 30kW, 50/60 Hz 165
FIGURE C- 38 PU-804 - TQG Power Unit, DED, 30kW, 400 Hz 166
FIGURE C- 39 PP-AN/MJQ-40 - TQG Power Plant, DED, 30kW, 50/60 Hz 167
FIGURE C- 40 Tactical Quiet Generator Set, DED, 60 kW (re-engine) 169
FIGURE C- 41 PU-805B - TQG Power Unit, 60 kW, 50/60 Hz 170
FIGURE C- 42 PU-806B - TQG Power Unit, 60 kW, 400 Hz 171
FIGURE C- 43 PP-AN/MJQ-41B - TQG Power Plant, 60 kW, 50/60 Hz 172
FIGURE C- 44 PP-AN/MJQ-1612 - TQG Power Plant, DED, 60kW, 50/60 Hz, Air Force PP 173
FIGURE C- 45 PP-AN/MJQ-1632 - TQG Power Plant, DED, 60kW, 400 Hz, Air Force PP . 174
FIGURE C- 46 TQG, Generator Set, DED, 60 kW 177
FIGURE C- 47 PU-805 - TQG Power Unit, DED, 60 kW, 50/60 Hz 178
FIGURE C- 48 PU-806 - TQG Power Unit, DED, 60 kW, 400 Hz 179
FIGURE C- 49 PP-AN/MJQ-41 - TQG Power Plant, DED, 60 kW, 50/60 Hz 180
FIGURE C- 50 PP-AN/MJQ-1612 - TQG Power Plant, 60 kW, 50/60 Hz 181
FIGURE C- 51 PP-AN/MJQ-1610 - TQG Power Plant, 60 kW, 400 Hz 182
FIGURE C- 52 MEP-810A – DPGDS, 750 kW, 50/60 Hz 184
FIGURE C- 53 MEP-810B – DPGDS, DED, 750 kW, 50/60 Hz 186
FIGURE C- 54 DISE, 200 Amp per Phase Feeder System - 3 Phase 187
FIGURE C- 55 DISE, 100 Amp per Phase Feeder System - 3 Phase 188
FIGURE C- 56 DISE, 40 Amp per Phase Distribution System - 3 Phase 189
FIGURE C- 57 DISE, 60 Amp Distribution System - 1 Phase 190
FIGURE C- 58 DISE, Utility Receptacles and Lighting Set 191

TABLES

TABLE- I Ancillary Equipment 5
TABLE- II Approximate voltage losses at rated amperage* 14

Source: https://assist.dla.mil -- Downloaded: 2016-12-11T08:30Z
Check the source to verify that this is the current version before use.

TABLE- III Batteries Applications 16
TABLE- IV DoD Standard Family of Mobile Electric Power Generating Sources 18
TABLE- V Army Supported Power Distribution, Illumination System, Electrical (PDISE) 19
TABLE- VI Marine Supported PDB 20
TABLE- VII Navy Supported PDB 20

TABLE A- I Guide to the Characteristic Data 24
TABLE A- II Characteristic Data for MEP-531A and MEP-501A 26
TABLE A- III Characteristic Data for MEP-831A and MEP-832A 28
TABLE A- IV Characteristic Data for MEP-1030 and MEP-1031 32
TABLE A- V Characteristic Data for MEP-1040 and MEP-1041 38
TABLE A- VI Characteristic Data for MEP-1050 and MEP-1051 43
TABLE A- VII Characteristic Data for MEP-1060 and MEP-1061 52
TABLE A- VIII Characteristic Data for MEP-1070 and MEP-1071 60
TABLE A- IX Characteristic Data for MEP-807A 70
TABLE A- X Characteristic Data for MEP-809A 74

TABLE B- I Guide to Power Distribution Systems Characteristic Data 77

TABLE C- I Guide to the Characteristic Data 115
TABLE C- II Characteristic Data for MEP-802A and MEP-812A 120
TABLE C- III Characteristic Data for MEP-952A 128
TABLE C- IV Characteristic Data for MEP-803A and MEP-813A 130
TABLE C- V Characteristic Data for MEP-903A 138
TABLE C- VI Characteristic Data for MEP-804B and MEP-814B 140
TABLE C- VII Characteristic Data for MEP-804A and MEP 814A 148
TABLE C- VIII Characteristic Data for MEP-805B and MEP-815B 157
TABLE C- IX Characteristic Data for MEP-805A and MEP-815A 163
TABLE C- X Characteristic Data for MEP-806B and MEP-816B 168
TABLE C- XI Characteristic Data for MEP-806A and MEP-816A 176
TABLE C- XII Characteristic Data for MEP-810A 183
TABLE C- XIII Characteristic Data for MEP-810B 185
TABLE C- XIV Characteristic Data for the M200 187

Source: https://assist.dla.mil -- Downloaded: 2016-12-11T08:30Z
Check the source to verify that this is the current version before use.

TABLE C- XV Characteristic Data for the M100 188
TABLE C- XVI Characteristic Data for the M40 189
TABLE C- XVII Characteristic Data for the M60 190
TABLE C- XVIII Characteristic Data for the M46 191

Source: https://assist.dla.mil -- Downloaded: 2016-12-11T08:30Z
Check the source to verify that this is the current version before use.

1. SCOPE

1.1 Scope. This standard provides detailed information on the physical and electrical characteristics and logistical data on the DoD Standard Family of Mobile Electric Power Generating Sources.

1.2 Applicability. The standard has been prepared for use by all Departments and Agencies of the DoD in selecting Mobile Electric Power Generating Sources (MEPGS) and ancillary equipment for applications requiring mobile sources of electric power and also to assist the Project Manager - Mobile Electric Power (PM-MEP) in effecting management and standardization of such sources of power within the DoD. The MEPGS listed herein are the only mobile power sources authorized for procurement. DoD components with mobile electric power requirements within the range of 0.5 kW through 1.1 megawatt, whose needs cannot be satisfied by one of the listed MEPGS, shall obtain deviation approval from the PM-MEP before taking any procurement action. Special instructions on the preparation and submittal of deviations are contained in AR 700-101, AFI 63-110(I), MCO 11310.8C, DLAR 4120.16 titled Joint Operating Procedures Management and Standardization of Mobile Electric Power Generating Sources. Online versions are available at: http://www.apd.army.mil/pdffiles/r700_101.pdf.

2. APPLICABLE DOCUMENTS

2.1 General. The documents listed in this section are specified in sections 3, 4, or 5 of this standard. This section does not include documents cited in other sections of this standard or recommended for additional information or as examples. While every effort has been made to ensure the completeness of this list, document users are cautioned that they must meet all specified requirements of documents cited in sections 3, 4, or 5 of this standard, whether or not they are listed.

2.2 Government documents.

DEPARTMENT OF DEFENSE

STANDARDS

MIL-STD-461	REQUIREMENTS FOR THE CONTROL OF ELECTROMAGNETIC INTERFERENCE CHARACTERISTICS OF SUBSYSTEMS AND EQUIPMENT
MIL-STD-705	GENERATOR SETS, ENGINE DRIVEN METHODS OF TESTS AND INSTRUCTIONS
MIL-STD-882	STANDARD PRACTICE FOR SYSTEM SAFETY
MIL-STD-1332	DEFINITIONS OF TACTICAL, PRIME, PRECISE, AND UTILITY TERMINOLOGIES FOR CLASSIFICATION OF THE DOD MOBILE ELECTRIC POWER ENGINE GENERATOR SET FAMILY
MIL-STD-1472	DESIGN CRITERIA STANDARD HUMAN ENGINEERING
MIL-STD 1474	DESIGN CRITERIA STANDARD NOISE LIMITS

SPECIFICATIONS

Source: https://assist.dla.mil -- Downloaded: 2016-12-11T08:30Z
Check the source to verify that this is the current version before use.

MIL-A-53009	ADDITIVE, ANTIFREEZE EXTENDER, LIQUID COOLING SYSTEMS
MIL-DTL-53072	CHEMICAL AGENT RESISTANT COATING (CARC) SYSTEM APPLICATION PROCEDURES AND QUALITY CONTROL INSPECTION
MIL-DTL-22992	CONNECTORS, PLUGS AND RECEPTACLES, ELECTRICAL, WATERPROOF, QUICK DISCONNECT, HEAVY DUTY TYPE, GENERAL SPECIFICATION FOR
MIL-DTL-83133	TURBINE FUEL, AVIATION, KEROSENE TYPE, JP-8 (NATO F-34), NATO F-35, AND JP-8+100 (NATO F-37)
MIL-PRF-2104	LUBRICATING OIL, INTERNAL COMBUSTION ENGINE, COMBAT/TACTICAL SERVICE
MIL-PRF-46167	LUBRICATING OIL, INTERNAL COMBUSTION ENGINE, ARCTIC

COMMERCIAL ITEM DESCRIPTIONS

A-A-52557	FUEL OIL, DIESEL; FOR POSTS, CAMPS AND STATIONS
A-A-52624	ANTIFREEZE, MULTI ENGINE TYPE
A-A-55804	RODS, GROUND (WITH ATTACHMENTS)

Copies of these documents are available online at: http://assist.dla.mil/quicksearch/ or from the Standardization Document Order Desk, 700 Robbins Avenue, Building 4D, Philadelphia, PA 19111-5094.

2.2.1 Other Government publications. The following other Government publications form a part of this document to the extent specified herein.

ARMY FIELD MANUALS

FM 5-424	THEATER OF OPERATIONS ELECTRICAL MANUALS

DEPARTMENT OF DEFENSE INSTRUCTIONS

DODI 4120.11	STANDARDIZATION OF MOBILE ELECTRIC POWER (MEP) GENERATING SOURCES

ARMY REGULATIONS

AR 70-38	RESEARCH, DEVELOPMENT, TEST AND EVALUATION OF MATERIEL FOR EXTREME CLIMATIC CONDITIONS
AR700-101	JOINT OPERATING PROCEDURES MANAGEMENT AND STANDARDIZATION OF MOBILE ELECTRIC POWER GENERATING SOURCES

Source: https://assist.dla.mil -- Downloaded: 2016-12-11T08:30Z
Check the source to verify that this is the current version before use.

CECOM LCMC PAMPHLET

CECOM TR-98-6	EARTH GROUNDING AND BONDING PAMPHLET

DRAWINGS

13211E7541	ADAPTER ASSEMBLY, FUEL DRUM
13226E7741	DRIVER/PULLER, GROUND ROD
13230E6380	ELBOW, PIPE TO HOSE
13230E6831	EXTINGUISHER, FIRE, CARBON DIOXIDE
69-668	LINE, FUEL, AUXILIARY
88-20561-2	CLAMP, HOSE: LOW PRESSURE
88-20580	HOSE, NONMETALLIC

These documents can be downloaded at the following link:

http://www.globalsecurity.org/military/library/policy/army/fm/5-424/index.html.

2.3 Order of precedence. Unless otherwise noted herein or in the contract, in the event of a conflict between the text of this document and the references cited herein, the text of this document takes precedence. Nothing in this document, however, supersedes applicable laws and regulations unless a specific exemption has been obtained.

3. DEFINITIONS

3.1 General. The following acronyms and definitions are used in this standard.

3.2 Acronyms used in this standard. Defined acronyms follow:

a. ABCA - American, British, Canadian, Australian (Quadripartite subset of NATO).

b. CARC - Chemical Agent Resistant Coating.

c. CGSA - Commercial Generator Sets and Assemblages.

d. CON - Contingency. A Type Classification category.

e. DED - Diesel Engine Driven.

f. DFARS - Defense Federal Acquisition Regulation System.

g. DoD - Department of Defense.

h. DSN - Defense Switched Network. A military telephone system.

i. EAT - Externally Air Transportable.

j. EMI - Electromagnetic Interference.

k. G - Generic. A Type Classification category.

l. GED - Gasoline Engine Driven.

m. GS - General Support.

n. GTED - Gas Turbine Engine Driven.

Source: https://assist.dla.mil -- Downloaded: 2016-12-11T08:30Z
Check the source to verify that this is the current version before use.

o. HAEMP - High Altitude Electromagnetic Pulse.

p. IAW - In Accordance With.

q. NATO - North Atlantic Treaty Organization.

r. NSN - National Stock Number. A unique identifier for stocking an item.

s. LIN - Line Item Number.

t. LP - Limited Procurement. A Type Classification category.

u. LVAD - Low Velocity Air Drop.

v. MEP - Mobile Electric Power.

w. MEPGS - Mobile Electric Power Generating Sources.

x. MHE - Material Handling Equipment.

y. MTBEFF - Mean Time Between Essential Function Failure.

z. MTBF - Mean Time Between Failure.

aa. MTBOMF - Mean Time Between Operation and Mission Failure.

bb. NATO - North Atlantic Treaty Organization.

cc. NAVFACINST - Naval Facilities Engineering Command Instructions.

dd. NBC - Nuclear, Biological, and Chemical.

ee. OBS - Obsolete. A Type Classification category.

ff. OEM - On Equipment Material.

gg. PDISE - Power Distribution and Illumination System, Electrical.

hh. PICA - Primary Inventory Control Activity.

ii. PMCS - Preventive Maintenance, Checks and Services.

jj. PM-MEP - Project Manager, Mobile Electric Power.

kk. PP - Power Plant.

ll. PU - Power Unit.

mm. PU/PP - Power Unit/Power Plant.

nn. QSTAG - Quadripartite Standardization Agreement (of ABCA).

oo. RAM - Reliability, Availability, Maintainability.

pp. RMS - Root Mean Square. An averaging method.

qq. ROC - Required Operation Capabilities.

rr. SSN - Standard Study Number. A federal budget identifier for procuring an item.

ss. STANAG - Standardization Agreement (of NATO).

tt. STD - Standard. A Type Classification category.

uu. TC - Type Classification.

Source: https://assist.dla.mil -- Downloaded: 2016-12-11T08:30Z
Check the source to verify that this is the current version before use.

vv. TDPs - Technical Data Packages.

ww. TMDE - Test, Measurement, and Diagnostic Equipment.

xx. TQG - Tactical Quiet Generator.

yy. TRADOC - US Army Training and Doctrine Command.

zz. VRLA - Valve Regulated Lead Acid Batteries.

3.3 Accessory box. An accessory box is an aluminum or steel box mounted to the Power Unit/Power Plant (PU/PP) trailer which contains ancillary equipment.

3.4 Ancillary equipment. Ancillary equipment is equipment issued with PU/PPs to support set-up, operation, or maintenance. Specific ancillary equipment is listed in TABLE- I.

TABLE- I Ancillary Equipment

NOMENCLATURE OR DESCRIPTION	IDENTIFYING NO.	NSN
Adapter Assembly, Fuel Drum	13211E7541	5342-00-066-1235
Clamp, Hose: Low Pressure	88-20561-2	4730-01-470-2409
Driver/Puller	13226E7741	5120-01-013-1676
Elbow, Pipe to Hose	13230E6380	4730-00-940-0947
Extinguisher, Fire, Carbon Dioxide	13230E6831	4210-01-552-7734
Hammer, Hand, Blacksmiths' or Engineers', Double Face, 8 lb		5120-00-251-4489
Hose, Nonmetallic	88-20580	4720-01-386-4210
Rods, Ground (w/Att), Sectional 9 ft	A-A-55804	5975-00-878-3791

3.5 Bandwidth. Bandwidth is the distance between two lines drawn parallel to the axis of chart movement, one each passing through the center points of maximum and minimum trace excursion respectively during any steady-state electrical load condition. Bandwidth may refer to voltage, frequency or speed and is expressed as a percentage of rated voltage, frequency or speed.

3.6 Camouflage pattern. A camouflage pattern is a three-color pattern designed to disrupt the silhouette or outline of a piece of equipment making it difficult to distinguish the equipment from its surroundings.

3.7 Chemical Agent Resistant Coating (CARC). CARC, a polyurethane finish, is designed to be resistant to Nuclear, Biological, and Chemical (NBC) agents and allow easy clean up and decontamination. In addition, CARC is not affected by the chemical agent decontamination chemicals which would remove most other paints.

3.8 Classification. MEPGS are classified by Type, Class, and Mode as follows:

3.8.1 Type. Type defines the classification of MEPGS according to its application, weight, mobility, reliability, and life.

3.8.1.1 Type I - Tactical. Tactical MEPGS are designed for high mobility in direct support of military forces where output of generator sets is normally, but not exclusively, used at generated voltage without necessity of transformation or extensive distribution systems. Life characteristics are considered secondary to light weight, small size, and a high degree of mobility.

3.8.1.2 Type II - Prime. Prime MEPGS are designed for long term use in semi-fixed locations for extended periods of time, with size, weight, and mobility considered secondary to long life and reliability. MEPGS output is normally at high voltage for distribution purposes and

Source: https://assist.dla.mil -- Downloaded: 2016-12-11T08:30Z
Check the source to verify that this is the current version before use.

requires transformation to utilization voltages at the load centers. Prime MEPGS may be expected to exceed the maximum weights for Tactical MEPGS.

3.8.2 Class. Class defines the classification of MEPGS according to its electrical performance characteristics.

3.8.2.1 Class 1 - Precise. Precise MEPGS are designed to provide close control of voltage and frequency performance for critical applications. See table II Electrical performance characteristics parameters - alternating current generator sets of MIL-STD-1332.

3.8.2.2 Class 2 - Utility. Utility MEPGS are designed to provide power for general purpose applications. There are three grades of AC Utility power ranging from that which is equivalent to and compatible with commercial power distribution systems (Class 2A) to that needed for utilitarian purposes (Class 2C) where requirements for voltage and frequency control are minimal. See table II of MIL-STD-1332 for AC parametric values and table III of MIL-STD-1332 for DC values.

3.8.3 Mode. Mode defines the classification of MEPGS according to the frequency of its power generated.

3.8.3.1 Mode I. Mode I MEPGS are capable of operating at either 50 or 60 Hz.

3.8.3.2 Mode II. Mode II MEPGS operate at 400 Hz.

3.8.3.3 Mode III. Mode III MEPGS only operate at 60 Hz.

3.8.3.4 Mode IV. Mode IV MEPGS provide DC output.

3.9 Deviation factor. The deviation factor of a voltage waveform is the ratio of the maximum difference between corresponding ordinates of the voltage waveform and of the equivalent sine wave to the maximum ordinate of the equivalent sine wave when the waves are superimposed in such a way as to make this maximum difference as small as possible.

3.10 Dip. Voltage dip is the decrease in voltage resulting from sudden application of load to a generator set. It is measured from the mean of the observed steady-state voltage band prior to the load change to the minimum voltage excursion. Voltage dip includes the effects of voltage regulation, whereas undershoot does not.

3.11 Failure. Failure is the inability of MEPGS to perform within previously specified limits.

3.11.1 Relevant failure. A relevant failure is any failure that cannot be corrected by the operator using set controls which causes any of the following: inability to start, maintain operation, or stop; degrade performance capability below designated levels; cause serious damage to system/subsystem by continued operation; or pose a serious personnel hazard.

3.11.2 Non-relevant failures. Non-relevant failures are failures not used to compute MEPGS reliability such as:

a. Failures which do not prevent the MEPGS from meeting the specified power output requirements; e.g., a panel light burns out.

b. Failures caused by operator error where proper procedures are documented in technical manuals, instruction plates mounted on the MEPGS or both; e.g., use of improper lubricant.

Source: https://assist.dla.mil -- Downloaded: 2016-12-11T08:30Z
Check the source to verify that this is the current version before use.

c. Secondary failures caused by failures in the powered equipment or other occurrences in the environment when integral protection is not provided against such equipment failure or occurrence, e.g., explosion or fire.

d. Failures which may be corrected by normal operator functions, e.g., readjustment of voltage after the 4-hour long-term stability period.

e. Failures because of characteristics of the load, e.g., waveform distortion caused by saturated inductors.

f. Failures because of a design deficiency when subsequent testing demonstrates that the design deficiency has been corrected.

g. Secondary failures caused by a primary failure because of a design deficiency when subsequent testing demonstrates that the design deficiency has been corrected.

h. Failures resulting from operating items beyond requirements, e.g., if a fuel injector scheduled for replacement at 1,000 hours is run to failure in order to determine mean life, failures after 1,000 hours are non-relevant failures.

3.12 Harmonic. A harmonic is a component of a periodic quantity which is an integral multiple of the fundamental frequency. For example, a component of frequency which is twice the fundamental frequency is called the second harmonic.

3.13 Hertz (Hz). Hz is the international unit of frequency.

3.14 Line Item Number (LIN). A LIN is a six character identifier of a generic nomenclature, where the generic nomenclature is the family name of an item or group of items whose physical traits and functional abilities are sufficiently alike to meet the same operational requirements.

3.15 Mean Time Between Failure (MTBF). For exponentially distributed failures, the Mean Time Between Failure (MTBF) is the reciprocal of the failure rate. Observed MTBF is equal to the total operating time of the equipment divided by the number of relevant failures.

3.16 Mobile Electric Power Generating Sources (MEPGS). MEPGS are all mobile electric power generating sources, 840-kilowatt (kW) and smaller, which are skid mounted, trailer mounted, or man-portable that are complete equipment assemblages or part of an assemblage, and that are capable of independently producing electric power.

3.17 Observed steady-state band. The observed steady-state band is the actual bandwidth determined by test of the voltage, frequency or speed. The observed steady-state band is differentiated from the prescribed steady-state band in that the prescribed steady-state band is the maximum permitted bandwidth.

3.18 Overshoot. Overshoot is the surge increase in speed, frequency or voltage above the mean of the observed steady-state band resulting from a sudden decrease in electrical load on electrical power generating sources. Overshoot is specified as a percentage of the rated speed, frequency or voltage.

3.19 Paralleling. Paralleling is the electrical connection of two or more electrical power generating sources in order to meet a power demand greater than that supplied by any single unit or to switch from one power source to another with no break in the power supplied.

Source: https://assist.dla.mil -- Downloaded: 2016-12-11T08:30Z
Check the source to verify that this is the current version before use.

3.20 Phase balance voltage. Phase balance voltage is the difference in percent of voltage between the phases of a multi-phase electrical generating source when the source is operating at rated voltage, rated frequency, and no load.

3.21 Power Factor (PF). Power factor is the ratio of real power (watts or kilowatts) used in a circuit to the apparent power delivered to the circuit. Power Factor is expressed as:

$$\text{PF} = \frac{\text{REAL POWER}}{\text{APPARENT POWER}}$$

3.22 Power Units/Power Plants.

3.22.1 Power Plant (PP). A power plant is a trailer mounted generator set configuration consisting of two generator sets, one or two trailers, a switch box, accessory box, and a fire extinguisher on each trailer. Individual details are provided in the Appendices.

3.22.2 Power Unit (PU). A power unit is trailer mounted generator set configuration consisting of one generator set, one trailer, accessory box, and a fire extinguisher. Individual details are provided in the characteristic data located in the Appendices.

3.22.3 Trailer chassis. All power units and power plants use standard military trailer chassis managed and type classified by the U.S. Army Tank-Automotive Command (TACOM) located in Warren, Michigan.

3.23 Primary Inventory Control Activity (PICA). PICA is the activity within the DoD designated as responsible for the functions of procurement, cataloging, depot maintenance, and disposal on an item basis.

3.24 Rated load. Rated load is the condition resulting when an electrical power generating source is operating at rated frequency, rated voltage, rated current, and rated power factor. It is normally stated as a given kilowatt value at a given power factor.

3.25 Reconnectable generator set. A reconnectable generator set has provisions for reconnecting the generator phase windings from low voltage to high voltage depending on the size and type of generator set and/or from three to single phase.

3.26 Recovery time. Recovery time is the elapsed time from the time the frequency or voltage trace leaves the prescribed steady-state band until the trace returns to and remains within the prescribed steady-state band as a result of a load change.

3.27 Regulation. Frequency regulation is the maximum difference between the no-load value of frequency and the value at any load up to and including rated load. This difference is expressed as a percentage of the rated frequency. The voltage regulation is expressed similarly except that the Root Mean Square (RMS) value of voltage is used.

3.28 Ripple voltage. Ripple voltage is the alternating component in the output voltage of a DC generator.

3.29 Rise. Voltage rise is the surge in voltage resulting from a sudden removal of load from an electrical power generating source. It is measured from the mean of the observed steady-state voltage band prior to the load change to maximum voltage excursion. Voltage rise includes the effects of voltage regulation, whereas overshoot does not.

Source: https://assist.dla.mil -- Downloaded: 2016-12-11T08:30Z
Check the source to verify that this is the current version before use.

3.30 Stability. Frequency stability describes the tendency of the frequency to remain at a constant value. Generally, the instantaneous value of frequency is not constant but varies randomly above and below a mean value. Stability may be described as either short-term or long term depending upon the length of time that the frequency is observed. Another term, bandwidth, describes the limits of these variations. Voltage stability is described similarly.

3.31 Steady-State. Steady-state is the operating condition, at constant load, after transients have settled out.

3.32 Type Classified for Army use. Type Classification (TC) is a process by which the Army identifies the degree of acceptability of a materiel item for Army use. The TC is the Army's implementation of the DoD requirement that an item is "approved for service use" before expending procurement funds. The types of classification categories are: Standard (STD), Generic (G), Limited Procurement (LP), Contingency (CON), and Obsolete (OBS).

3.33 Undershoot. Undershoot is the surge decrease in speed, frequency, or voltage below the mean of the observed steady-state band resulting from a sudden increase in electrical load on an electrical power generating source. Undershoot is specified as a percentage of the rated speed, frequency, or voltage.

3.34 Voltage modulation. The peak value of a voltage waveform may vary with time. Voltage modulation is the difference in the absolute value of the peak voltage readings stated as a percentage of average absolute peak voltage.

4. GENERAL REQUIREMENTS

4.1 Performance. The performance requirements are developed from various requirements documents generated from the US Army Training and Doctrine Command (TRADOC) such as the Commercial Generator Sets and Assemblages (CGSA) Required Operational Capabilities (ROC) 3-100 kW and the Capability Production Document (CPD) for Tactical Electric Power (TEP) for 0.5 – 200 kW. These requirements were incorporated into Purchase Descriptions for initial procurement and Military Detail Specifications for re-procurements. A summary of the requirements for MEPGS follows:

4.1.1 Noise. For 2 kW size MEPGS sets and smaller, the aural signature shall not exceed 72 dBA at 7 meters when measured in accordance with table IV, MIL-STD-1474. For the 3 kW size set, the aural signature shall not exceed 69 dBA at 7 meters. For the 5 and 10 kW size sets, the aural signature shall not exceed 68 dBA at 7 meters. For the 15 and 30 kW size sets, the aural signature shall not exceed 70 dBA at 7 meters. For the 60 kW size set, the aural signature shall not exceed 72 dBA at 7 meters. For the 100 and 200 kW size sets, the aural signature shall not exceed 77 dBA at 7 meters.

4.1.2 Environment. The MEPGS shall be fully operable at rated load in the hot, (90°F to 120°F) and basic (-25°F to 95°F) and cold (-50°F to -25°F) climatic conditions as defined in AR 70-38. All MEPGS must start and operate at rated load at ambient temperatures ranging from -50°F to 125°F at sea level. Winterization kits or other kits are allowed to ensure the MEPGS starts and operates in cold and hot climates consistent with these two climatic design types defined in AR 70-38. Additionally, the MEPGS must operate at temperatures up to including 135°F at sea level though the rated level may be reduced by 2 percent.

4.1.3 Altitude. MEPGS will start and operate from -50°F to 95°F at 4,000 feet. These MEPGS must operate up to 10,000 feet above sea level at 95°F with standard power output derate factor of 3.5% per thousand feet above 4,000 feet is allowable.

Source: https://assist.dla.mil -- Downloaded: 2016-12-11T08:30Z
Check the source to verify that this is the current version before use.

4.1.4 Electrical performance. MEPGS shall provide electric power in accordance with military power quality requirements in MIL-STD-1332B. 0.5kW to 3kW MEPGS shall supply Utility Class 2C outputs at 60Hz or 400Hz. 5kW to 60kW MEPGS shall supply Utility Class 2B outputs at 50/60Hz or 400Hz. 100kW to 200kW MEPGS shall supply Utility Class 2B outputs at 50/60Hz. MEPGS from 100kW to 200kW shall provide a 50/60Hz output only: 400Hz is not required for large sets. Direct Current (DC) systems (any output) shall comply with Utility Class (DC) requirements.

4.1.5 Inclined operation. Individual MEPGS, including trailer-mounted power units and power plants shall be capable of operating on uneven terrain with omni-directional grades up to 15 degrees.

4.1.6 Fuels, lubricants, and coolants. The MEPGS shall operate on diesel fuels and utilize lubricants and coolants conforming to current military standards. The fuels include Grade No. 1-D and 2-D diesel fuels conforming to A-A-52557, and JP-8 turbine fuel conforming to MIL-DTL-83133. Lubricants include oils conforming to MIL-PRF-2104 and MIL-PRF-46167. Coolants include antifreeze conforming to A-A-52624 or water with MIL-A-53009 additive.

4.1.7 Protective devices. The MEPGS shall have an automatic protective system to prevent MEPGS failure due to various operational conditions. All MEPGS shall provide for automatic shutdown for over speed and short circuit conditions. Some MEPGS shall provide for automatic shutdown with manual override due to low fuel, low oil pressure, high temperature, and high voltage conditions. All MEPGS shall drop load for over current conditions. Some MEPGS shall drop load for under voltage and reverse power conditions. In addition to the automatic protective system described above, the AMMPS sets provide warnings prior to activation. MEPGS 3 kW and above provide manual override to this system with the exception of over speed and short circuit conditions.

4.1.8 Maintenance during operation. Personnel shall be capable of checking and adding oil for MEPGS 15 kW and larger; and fuel for MEPGS 3 kW and larger, during operation.

4.1.9 Camouflage nets. The MEPGS shall meet the standard electrical performance requirements when operating with thermal infrared suppression camouflage nets.

4.1.10 Storage. The MEPGS shall be storable and not damaged by hot through severe cold temperatures in accordance with AR 70-38, -60°F to 160°F.

4.1.11 Preventive Maintenance Checks and Services (PMCS). Personnel shall be able to change the oil during scheduled services within 20 minutes. The MEPGS shall be equipped with a means of bleeding the fuel system of air/water during pre and post operation checks. The MEPGS shall have solderless connections. The normal PMCS interval for sets 5kW to 200kW shall be every 24 operating hours. PMCS intervals for sets 3kW and less shall coincide with refueling. MEPGS shall also be capable of 120-hours continuous operation (with auxiliary fuel supply) without shutdown for PMCS. PMCS tasks shall not exceed 20-minutes (includes fueling). Warfighters will maintain MEPGS at the field maintenance level.

4.1.12 Fuel capacity. The MEPGS shall include an onboard fuel tank for skid mounted MEPGS capable of supporting 8 hours of continuous operations at rated loads except for the 3 kW MEPGS which will support 1 hour minimum (up to 8 hours desired) of continuous operation.

4.1.13 Auxiliary fuel system. The MEPGS shall be capable of safely operating from standard external fuel sources/tanks. These fuel sources/tanks include any fuel containers approved for use

Source: https://assist.dla.mil -- Downloaded: 2016-12-11T08:30Z
Check the source to verify that this is the current version before use.

with military logistics fuels, e.g., 5-gallon fuel can, 55-gallon drums or any appropriate fuel containers in the military inventory.

4.1.14 Supportability. The MEPGS shall be maintained by standard test, measurement, and diagnostic equipment (TMDE) and not require additional or special tools or TMDE.

4.1.15 Starting system. The MEPGS shall contain a 24 volt cranking system. The MEPGS shall contain a battery charging system for MEPGS 3 kW and above. The electrical starting system shall be compatible with current and emerging military tactical vehicles that have a 28-volt DC electrical system that complies with MIL-STD-12758, "Characteristics of 28-Volt DC Electrical Systems in Military Vehicles". These sets shall use military qualified Starting, Lighting and Ignition (SLI) batteries (or equal). Sets 3kW and smaller can use other electric or manual starting methods. If manual (recoil) starting is used, the pull force a Warfighter must exert shall not exceed 33 pounds.

4.1.16 NATO slave receptacle. The MEPGS shall be equipped for slave starting using a standard NATO receptacle to allow tactical vehicle-assisted starting under ambient climate conditions when necessary.

4.1.17 Instrumentation. The MEPGS shall be equipped with devices necessary to monitor operating conditions and indicate a faulty condition which may cause set malfunctions and shutdowns.

4.1.18 Adjustments. All MEPGS shall permit operator adjustment of voltage output. 5 kW and larger MEPGS shall permit operator adjustment of frequency output. Each MEPGS has an emergency stop switch.

4.1.19 Parallel operation. The MEPGS shall be capable of parallel operations for sets 5 kW and larger.

4.1.20 High Altitude Electromagnetic Pulse (HAEMP). The MEPGS shall survive effects of HAEMP.

4.1.21 Electromagnetic Interference (EMI). The MEPGS shall not emit nor be susceptible to EMI signals in MIL-STD-461.

4.1.22 Transportability. The MEPGS are issued as Skid Mounted, trailer mounted Power Units (PU) and trailer mounted Power Plants (PP). These configurations must be:

a. Marine, rail, highway and air transportable.

b. Towable in trailer mounted configurations with ancillary equipment by standard military prime mover based on the weight of the configurations. Individual prime movers are detailed in the characteristic data in the Appendices.

c. Externally air transportable (EAT) by Army utility or medium rotary wing aircraft for the 3 kW through 60 kW MEPGS and internally by C-l30 and larger USAF aircraft. The 3 kW Skid Mounted MEPGS must also be internally transportable in Army utility rotary wing aircraft.

d. Air deliverable by low velocity air drop (LVAD) for the 3 kW – 100 kW MEPGS.

e. Warfighter portable for the 3 kW Skid Mounted MEPGS.

f. Equipped with the necessary lifting and tie down provisions to support all of the above transportation requirements.

Source: https://assist.dla.mil -- Downloaded: 2016-12-11T08:30Z
Check the source to verify that this is the current version before use.

g. Equipped with fork lift openings suitable for standard Material Handling Equipment (MHE).

4.1.23 Reliability, Availability, Maintainability (RAM). MEPGS shall have at least a 0.91 probability of operating 71-hours, 3-days of operation minus 1-hour maintenance, without an Essential Function Failure. This equals at least a Mean Time Between Essential Function Failure (MTBEFF) of 750 hours. The medium time to repair for all unscheduled maintenance demands at field level must not exceed 1.5 hours. The maximum time to repair must not exceed two hours for 90% of all essential maintenance demands. The actual numbers are provided in the characteristic data in the Appendices.

4.2 Service Specific Power Distribution Systems.

4.2.1 Army Supported Power Distribution and Illumination System, Electrical (PDISE). PDISE is a family of five end items; consisting of two feeder systems, two distribution systems, and a utility receptacle and lighting system designed to distribute power from MEPGS to the user. Information on the PDISE is contained in Appendix B.

4.2.1.1 Feeder Systems. PDISE has two feeder systems. These feeder systems will subdivide and distribute 3 phase, 120/208 volt power from a single power source to multiple distribution systems. The M200 is a 200 amp per phase system. The M100 is a 100 amp per phase system. Each system consists of a feeder center, circuit breaker box with military standard input and output connectors, with appropriate military standard connectors and military standard cabling.

4.2.1.2 Distribution Systems. PDISE has two distribution systems. These distribution systems will subdivide and distribute 3 phase or single phase, 120/208 volt power from a single power source to multiple single phase 20 A circuits.

4.2.1.2.1 M40 Distribution System. The M40 distribution system is a three phase, 40 amp/phase distribution system consisting of a housed circuit breaker system used to distribute 120/208 V, 3 phase power from a feeder system or MEPGS to any 120V single phase loads.

4.2.1.2.2 M60 Distribution System. The M60 distribution system is a single phase, 120 V, 60 amp distribution system consisting of a housed circuit breaker system used to distribute from a MEPGS to any 120V single phase loads. The M60 does not interface with either feeder system or the 40 amp distribution system (M40).

4.2.1.2.3 Utility Receptacle and Illumination Kit. PDISE utility receptacle and illumination kit (M46) is a set of power cords, light sets, and duplex boxes that can be connected to a distribution system to provide power and light. PDISE utility receptacle and illumination kit has no self protection and should only be used with one of the PDISE distribution systems (M40 or M60). PDISE utility receptacle and illumination kit provides internal tent and shelter wiring and lighting.

4.2.1.2.4 Power Distribution System, Electrical (PDISE) Interface. PDISE contains an interface cable that allows the system to be connected to the power source using a split lug connection. Within the PDISE system, all electrical connections are made by connectors conforming to MIL-DTL-22992. PDISE provides standard 20 amp, single phase, duplex type connections for individual circuits used by the load. Larger loads can be connected to the PDISE feeder systems using the proper MIL-DTL-22992 connectors.

4.2.1.2.5 PDISE implementation. The Army supported PDISE should be issued based on the user's power requirements. The number and types of power generating sources available and

Source: https://assist.dla.mil -- Downloaded: 2016-12-11T08:30Z
Check the source to verify that this is the current version before use.

the details of the user's power requirements will be the driving factors in determining how to employ PDISE. PDISE is a flexible system and no single solution is a "best" solution. A typical implementation is presented in FIGURE 1. PDISE is not necessarily issued on the basis of the MEPGS size. In some design applications, the PDISE total circuit capability can be much less than the MEPGS kW rating and in other applications, it can be much greater.

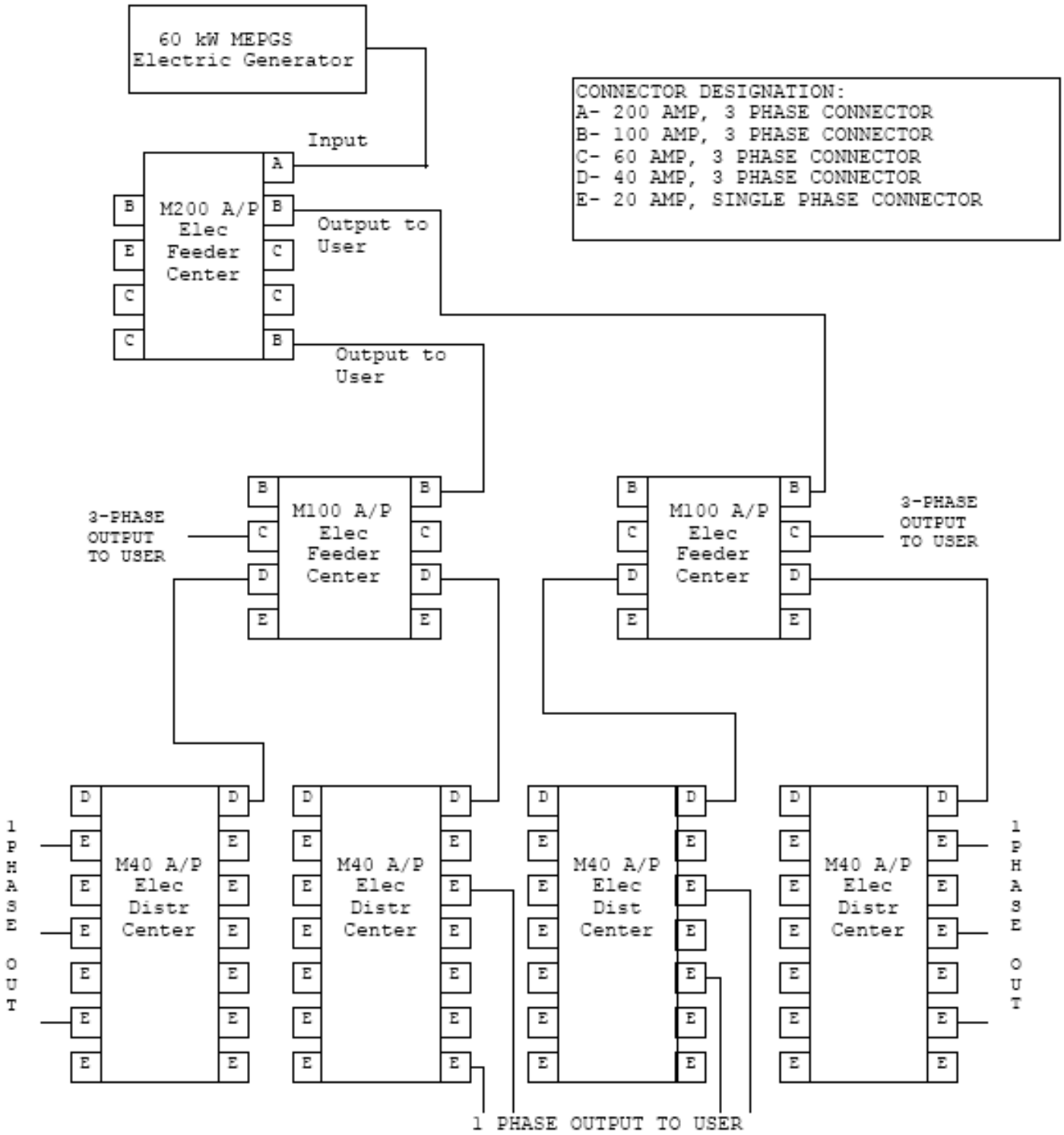

Source: https://assist.dla.mil -- Downloaded: 2016-12-11T08:30Z
Check the source to verify that this is the current version before use.

FIGURE 1 Sample of a possible distribution arrangement

4.2.1.2.6 Voltage drop considerations for the Army Supported PDISE. Voltage drop, caused by resistance in cabling, will limit the distance to which the power can be distributed. Generally, full rated power can be distributed about 100 feet from a distribution center and up to 200 feet from a feeder system, for a total of about 300 feet. TABLE- II below provides voltage drops for various cable size and length combinations. The voltage drops tabulated are for rated current. Since voltage drops are proportional to the current, 50% of rated load would produce 50% of the drop listed in the table.

TABLE- II Approximate voltage losses at rated amperage*

Rated amperage/no. of pins	**Cable length in feet**					
	15	25	50	100	200	300
200 amp/8 pin cables (3-phase)	1 V	1.6 V	3.2 V	6.4 V	12.8 V	19.2 V
100 amp/8 pin cables (3-phase)	0.4 V	0.7 V	1.4 V	2.8 V	5.6 V	8.4 V
60 amp/5 pin cables (3-phase)	0.5 V	0.9 V	1.6 V	3.5 V	6.4 V	10.5 V
40 amp/5 pin cables (3-phase)	0.3 V	0.6 V	1.1 V	2.3 V	4.4 V	6.9 V
60 amp/4 pin cables (1-phase)	0.5 V	0.9 V	1.7 V	3.4 V	6.8 V	10.2 V
20 amp/3 pin cables (1-phase)	1.1 V	1.8 V	3.6 V	7.2 V	14.4 V	21.6 V

*Actual voltage drop will be affected by temperature and the quality of the connection made when mating the connectors (dirt, corrosion, and oil affect pin resistance).

4.2.1.2.7 Phase balance for the Army Supported PDISE. Phase balance must be considered when connecting single phase loads to a 3-phase generator. If a phase is unbalanced by more than 10% it can cause damage to the power generation source.

4.2.1.2.8 Universal Adapter for the Army Supported PDISE. The universal adapter is of particular value and is shown in the Appendices. The adapter is designed to connect electrical equipment, with an electrical connection not supported by PDISE, to PDISE. It consists of a box with a three-phase 40/60 ampere connector and five split-lug terminals. The universal adapter also enables users not having the required connectors for the 40 and 60 ampere outlets on the M100 and M200 feeder systems, or the feed-thru on the 40 ampere distribution system, to hook up to PDISE.

4.2.2 Marine Supported Power Distribution Box (PDB). Information on the Marine supported PDB is contained in Appendix B.

4.2.3 Navy Supported Power Distribution Systems. Information on the Navy supported Power Distribution Systems is contained in Appendix B.

4.2.4 Interfaces. The following paragraphs provide the general interfaces for the DoD Standard Family of MEPGS. Specific interfaces are described in the characteristic data in Appendix B.

4.2.4.1 Electrical Interface. All MEPGS, 5 kW and above, are connected to the load based on a 5 wire system for 3 phase 120/208 V configuration. Each MEPGS contains a load terminal board with 5 split lug terminals to connect the load cable. All load terminal boards have a GND terminal used to bond the equipment to the MEPGS and ground them to earth ground. All load

Source: https://assist.dla.mil -- Downloaded: 2016-12-11T08:30Z
Check the source to verify that this is the current version before use.

terminal boards have an N terminal for the neutral connection. All load terminal boards have one load terminal for each phase marked L1, L2, & L3. All MEPGS, 3 kW and below, are single phase and contain the same GND and N terminals as the rest of the fleet. They also have either one or two load terminals, L1 or L2, based on the voltage capability. The voltage connections and terminal descriptions are provided in the characteristic data in the Appendices.

4.2.4.2 Convenience receptacle. Each set has a standard duplex receptacle, rated at 15 A, with ground fault circuit interrupter (GFCI) protection.

4.2.4.3 Trailer interface. Each MEPGS, 3 kW and above, has mounting holes in the skid base to enable the MEPGS to be mounted on a trailer or other locations. Specific locations are detailed in the characteristic data located in the Appendices.

4.2.4.4 Primary fuel interface. The onboard fuel tanks have been designed to be filled with the standard fuel nozzles used on fuel trucks and fuel cans.

4.2.4.5 Auxiliary fuel interface. Each MEPGS, 3 kW and above, has an auxiliary fuel system interface built in. MEPGS are issued with an auxiliary fuel hose that can be connected between the auxiliary fuel fitting on the power generating source and an auxiliary fuel source. After connection of the hose and activation of the switch on the control panel, fuel will be automatically transferred to the MEPGS fuel tank from an additional fuel source. PU/PPs have an auxiliary fuel adapter provided that allows the fuel to be withdrawn from a standard 5 gallon can or a 55 gallon drum.

4.2.5 Human interface. All MEPGS have been designed to the human factors criteria of MIL-STD-1472, Design Criteria Standard Human Engineering.

4.2.6 Logistical interface. All MEPGS are organically supported through the standard DoD supply system.

4.2.7 Dimensions and weight. The dimensions and weight requirements for MEPGS are derived from the various transportability requirements. Specific dimensions and weights are provided in the characteristic data in the Appendices.

4.2.8 Camouflage nets. All MEPGS, except the 2 kW MTG, allow the engine exhaust gases and cooling air to exit through the top of the sets. This design prevents thermal hot spots from being developed on the sides of the thermal infrared suppression camouflage nets.

4.2.9 Exhaust outlet. All MEPGS, 5 kW and above, are equipped with an exhaust outlet that terminates with a standard National Pipe Thread accessible from the outside of the set.

4.2.10 Safety. All MEPGS have been designed to meet the provisions of MIL-STD-882, Standard Practice for System Safety.

4.2.10.1 Grounding. Electrical power generating and distribution systems must be properly grounded to prevent hazards to users. Techniques for grounding power generating systems are included in FM 5-424, Electric Power Generation in the Field and CECOM TR-98-6 Earth Grounding and Bonding Pamphlet. A three-piece sectional ground system is provided with each MEPGS and is also available in the DoD supply system.

4.2.10.2 Fire Protection. Adequate fire protection must be provided in the area in which the MEPGS will be used. A fire extinguisher, NSN: 4210-00-270-4512, is recommended.

4.2.10.3 Noise Protection. Adequate hearing protection must be utilized in the vicinity of some operating MEPGS. See characteristic data for specific audio noise levels. Prolonged

Source: https://assist.dla.mil -- Downloaded: 2016-12-11T08:30Z
Check the source to verify that this is the current version before use.

exposure to the high intensity noise produced by some operating MEPGS can cause permanent hearing damage or complete loss of hearing. Operation of the Advanced Medium Mobile Power Sources (AMMPS) and Tactical Quiet Generator (TQG) sets and other quiet MEPGS do not require hearing protection as long as the acoustic panels are not opened or removed.

4.3 Delivered condition. Details of delivered condition, optional equipment, and accessories are below.

4.3.1 Finish. All DoD Standard Family of MEPGS are provided with a Green 383 topcoat of Chemical Agent Resistant Coating (CARC), applied in accordance with MIL-DTL-53072. If desired, a three color camouflage pattern is available for all MEPGS 5 kW and above. This pattern has available colors for 3 different environments, Woodlands, Desert, and Arctic.

4.3.2 Skid Mounted MEPGS.

4.3.2.1 Safety items. All Skid Mounted MEPGS are delivered with a three piece grounding system, A-A- 55804, National Stock Number 5975-00-878-3791.

4.3.2.2 Batteries. All Skid Mounted MEPGS, 3 kW and above, are provided with batteries. These batteries are either Valve Regulated Lead Acid (VRLA) batteries, Valve Regulated Sealed Lead Acid (VRSLA) batteries, or dry charged lead-acid batteries as shown in TABLE- III.

TABLE- III Batteries Applications

BATTERIES		
MODEL	**DESCRIPTION**	**APPLICATION**
Concord RG-24-15A1	VRSLA – 24 Volt	3 kW TQG
Teledyne 7243-16A	VRSLA – 24 Volt	3 kW TQG
4HN	Dry Charged Lead-Acid – 24 Volt	3 kW TQG
2HN	Dry Charged Lead-Acid – 12 Volt	5 kW TQG
6TMF	Dry Charged Lead-Acid – 12 Volt	15 kW - 60 kW TQG
Optima D51R	VRLA – 12 Volt	5 & 10 kW AMMPS; 5 kW TQG
Optima 800S/U	VRLA – 12 Volt	15 - 60 kW AMMPS; 10-60 kW TQG
Optima 8050-160	VRLA – 12 Volt	100 & 200 kW TQG

4.3.2.3 Auxiliary fuel line. A 25 foot auxiliary fuel line is furnished with the 3 kW through 200 kW DoD Standard Family of MEPGS. Auxiliary fuel lines for other MEPGS may be ordered or fabricated on site in accordance with drawing 69-668, titled “Line, Fuel, Auxiliary”, see FIGURE 2 below.

Source: https://assist.dla.mil -- Downloaded: 2016-12-11T08:30Z
Check the source to verify that this is the current version before use.

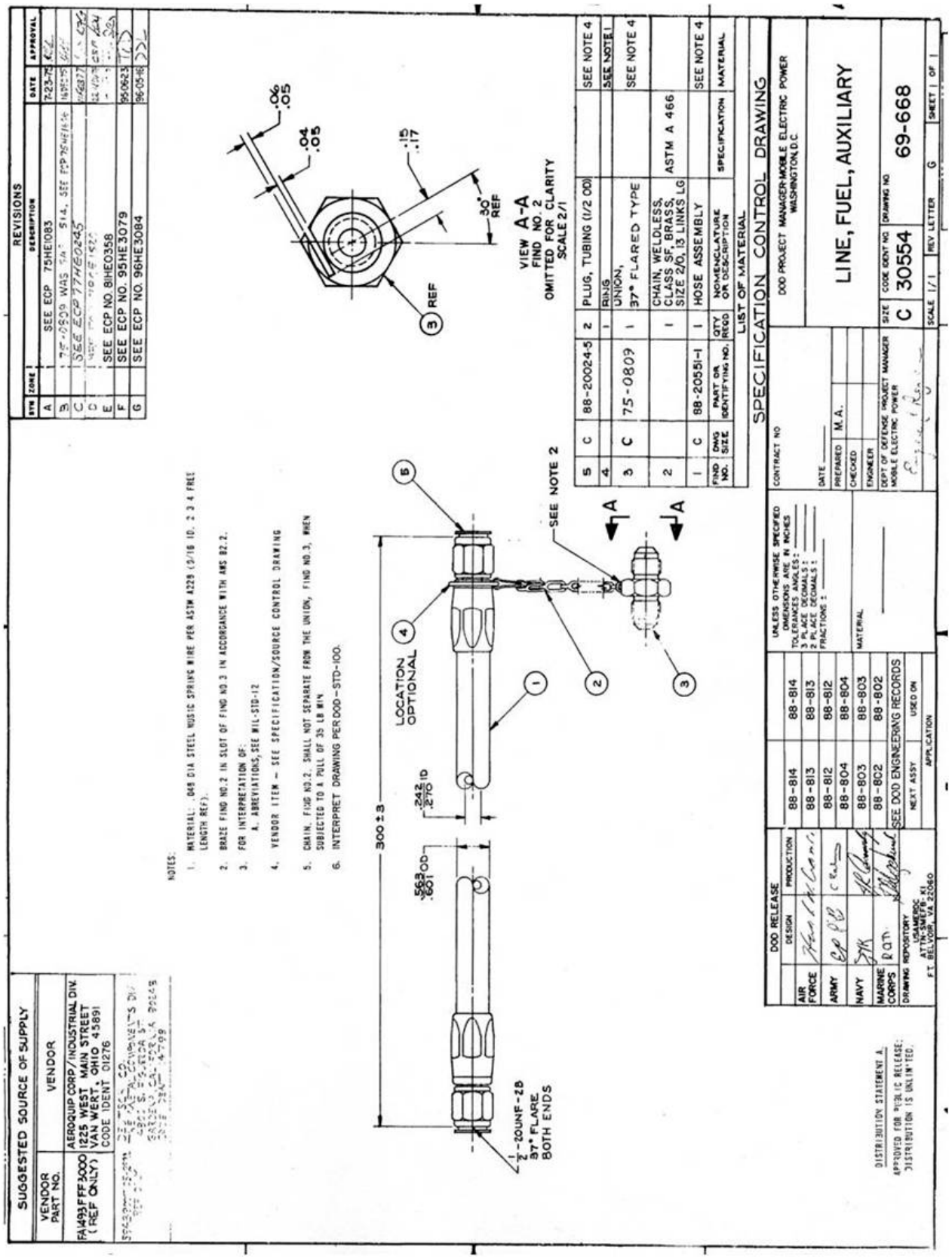

FIGURE 2 Auxiliary Fuel Hose Assembly Drawing

Source: https://assist.dla.mil -- Downloaded: 2016-12-11T08:30Z
Check the source to verify that this is the current version before use.

4.3.2.4 Starting aids. All sets have provisions to allow starting of the MEPGS from a temperature of -25°F and above. MEPGS, 5 kW and above, have a winterization kit available that will allow them to start and operate down to -50°F. Details of the starting systems are provided in the characteristic data in the Appendices.

4.3.2.5 Paralleling cables. Paralleling cables are provided with MEPGS, 5 through 750 kW. MEPGS can only be paralleled to MEPGS of the same model and mode.

4.3.3 Power Units/Power Plants (PU/PP).

4.3.3.1 Power Units. Each Power Unit (PU) contains an accessory box with the ancillary equipment described in TABLE- I. Details are included in the characteristic data in the Appendices.

4.3.3.2 Power Plants. Each Power Plant (PP) trailer contains an accessory box with the ancillary equipment described in TABLE- I. In addition, the PP contains a switchbox and all of the cabling necessary to, depending on the size of the MEPGS, switch loads between MEPGS or operate two MEPGS in parallel without interrupting power to the load. Details are included in the characteristic data in the Appendices.

5. DETAILED REQUIREMENTS.

5.1 DoD Standard Family of Mobile Electric Power Generating Sources. The DoD Standard Family of MEPGS is defined in TABLE- IV below. Individual characteristic data for these MEPGS are provided in Appendix A. Adequate physical descriptions and performance characteristics to permit selection of the item best suited for a specific application are included in this data. In addition, photographs and outline drawings are included to facilitate application planning.

TABLE- IV DoD Standard Family of Mobile Electric Power Generating Sources

SIZE	ITEM DESCRIPTION	MODEL	NSN	LIN	SSN
2 kW	MTG 28 VDC, DED, Tubular Frame	MEP-501A	6115-01-435-1567	G36169	M59400
	MTG 60 Hz, DED, Tubular Frame	MEP-531A	6115-01-435-1565	G36237	M59400
3 kW	TQG 60 Hz, DED, Skid Mounted	MEP-831A	6115-01-285-3012	G18358	M59400
	TQG 400 Hz, DED, Skid Mounted	MEP-832A	6115-01-287-2431	G74847	M59400
	TQG Power Plant, 60 Hz	PP-AN/MJQ-42	6115-01-322-8583	P42466	R62700
	TQG Power Plant, 60 Hz	PP-AN/MJQ-43A	6115-01-322-8582	P42534	R62700
5 kW	AMMPS 60 Hz, DED, Skid Mounted	MEP-1030	6115-01-561-7329	Z01328	M53500
	AMMPS 400 Hz, DED, Skid Mounted	MEP-1031	6115-01-561-7438	Z01329	M53500
	AMMPS Power Unit, 60 Hz	PU-2001	6115-01-562-3992	Z01420	R62700
	AMMPS Power Plant, 60 Hz	PP-3001	6115-01-562-3700	Z01422	R62700
	AMMPS Power Plant, 60 Hz	PP-3101	6115-01-562-3675	Z01428	R62700
10 kW	AMMPS 60 Hz, DED, Skid Mounted	MEP-1040	6115-01-561-7455	Z01330	M53500
	AMMPS 400 Hz, DED, Skid Mounted	MEP-1041	6115-01-561-7466	Z01331	M53500
	AMMPS Power Unit, 60 Hz	PU-2002	6115-01-562-4010	Z01414	R62700
	AMMPS Power Unit, 400 Hz	PU-2012	6115-01-562-3907	Z01423	R62700
	AMMPS Power Plant, 60 Hz	PP-3102	6115-01-562-6480	Z01415	R62700

Source: https://assist.dla.mil -- Downloaded: 2016-12-11T08:30Z
Check the source to verify that this is the current version before use.

TABLE- 4 DoD Standard Family of Mobile Electric Power Generating Sources - Continued.

SIZE	ITEM DESCRIPTION	MODEL	NSN	LIN	SSN
15 kW	AMMPS 50/60 Hz, DED, Skid Mounted	MEP-1050	6115-01-561-7634	Z01332	M53500
	AMMPS 400 Hz, DED, Skid Mounted	MEP-1051	6115-01-561-7674	Z01333	M53500
	AMMPS Power Unit, 50/60 Hz	PU-2003	6115-01-562-3721	Z01405	R62700
	AMMPS Power Unit, 50/60 Hz	PU-2101	6115-01-562-3689	Z01404	R62700
	AMMPS Power Unit, 400 Hz	PU-2111	6115-01-562-3659	Z01333	R62700
	AMMPS Power Plant, 400 Hz	PP-3003	6115-01-562-3995	Z01437	R62700
30 kW	AMMPS 50/60 Hz, DED, Skid Mounted	MEP-1060	6115-01-561-7718	Z01334	M53500
	AMMPS 400 Hz, DED, Skid Mounted	MEP-1061	6115-01-561-7738	Z01335	M53500
	AMMPS Power Unit, 50/60 Hz	PU-2102	6115-01-562-4106	Z01395	R62700
	AMMPS Power Unit, 400 Hz	PU-2112	6115-01-562-4421	Z01389	R62700
	AMMPS Power Plant, 50/60 Hz	PP-3105	6115-01-562-4009	Z01398	R62700
60 kW	AMMPS 50/60 Hz, DED, Skid Mounted	MEP-1070	6115-01-561-7788	Z01336	M53500
	AMMPS 400 Hz, DED, Skid Mounted	MEP-1071	6115-01-561-7895	Z01339	M53500
	AMMPS Power Unit, 50/60 Hz	PU-2103	6115-01-562-4600	Z01385	R62700
	AMMPS Power Unit, 400 Hz	PU-2113	6115-01-562-4616	Z01381	R62700
	AMMPS Power Plant, 50/60 Hz	PP-3106	6115-01-562-4066	Z01388	R62700
	AMMPS Power Plant, 400 Hz	PP-3206	6115-01-613-9295		R62700
	AMMPS Power Plant, 50/60 Hz	PP-3216	6115-01-613-9296		R62700
100 kW	TQG 50/60 Hz, DED, Skid Mounted	MEP-807A	6115-01-296-1463	G17596	M54400
	TQG Power Unit, 50/60 Hz	PU-807A	6115-01-471-7088	G17528	M54400
200 kW	TQG 50/60 Hz, DED, Skid Mounted	MEP-809A	6115-01-296-1462	G17664	M54400
	TQG Power Unit, 50/60 Hz	PU-809A	6115-01-471-7085	G26395	M54400
750 kW	DPGDS, 50/60 Hz, DED	MEP-810B	6115-01-486-4032	G17800	M54400

5.2 Service Specific Power Distribution Systems.

5.2.1 Army Supported Power Distribution Illumination Systems, Electrical (PDISE). Power Distribution Illumination Systems, Electrical (PDISE) is defined in TABLE- V below. Individual characteristic data for PDISE are provided in Appendix B. Adequate physical descriptions and performance characteristics to permit selection of the item(s) best suited for a specific application are included in this data. In addition, photographs and outline drawings are included to facilitate application planning.

TABLE- V Army Supported Power Distribution, Illumination System, Electrical (PDISE)

ITEM DESCRIPTION	MODEL NO.	NSN	LIN	SSN
200 amp/phase Feeder Sys - 3 Phase	M200 A/P	6150-01-308-5672	F55689	R45400
100 amp/phase Feeder Sys - 3 Phase	M100 A/P	6150-01-308-5671	F55621	R45400
40 amp/phase Dist Sys - 3 Phase	M40 A/P	6150-01-307-9446	F55485	R45400
60 amp Dist Sys - 1 Phase	M60 A/P	6150-01-307-9445	F55553	R45400
Electrical Kit, Utility Receptacle	M46	6150-01-208-9751	U89185	R45400

Source: https://assist.dla.mil -- Downloaded: 2016-12-11T08:30Z
Check the source to verify that this is the current version before use.

5.2.2 Marine Supported Power Distribution Box (PDB). The PDB is defined in TABLE- VI below. Individual characteristic data for PDB are provided in Appendix B. Adequate physical descriptions and performance characteristics to permit selection of the item(s) best suited for a specific application are included in this data. In addition, photographs and outline drawings are included to facilitate application planning.

TABLE- VI Marine Supported PDB

ITEM DESCRIPTION	MODEL NO.	NSN
MEPDIS-R-5 kW Outdoor PDB	DB-30NA-A22-S3	6110-01-532-1821
MEPDIS-R-5 kW Indoor PDB	DB-30NA-AQQ-S3	6110-01-532-1794
MEPDIS-R-15kW PDB	DB-30MA-F22QS3	6110-01-532-1764
MEPDIS-R-30kW PDB	DB100MA-P22QS3	6110-01-532-1809
MEPDIS-R-100kW PDB	DB350MA-P2WAS3	6110-01-532-1835
MEPDIS-R-300kW PDB	DB350MA-P2WQS	6110-01-532-1776

5.2.3 Navy Supported Power Distribution Systems. The Navy supported Systems are defined in TABLE- VII below. Individual characteristic data for the systems are provided in Appendix B. Adequate physical descriptions and performance characteristics to permit selection of the item(s) best suited for a specific application are included in this data. In addition, photographs and outline drawings are included to facilitate application planning.

TABLE- VII Navy Supported PDB

ITEM DESCRIPTION	MODEL NO.	NSN
480-208Y/120VA 15kVA Portable Distribution Center	ASSEMBLY 30208	6110-00-186-2542
480-208Y/120VA 30kVAPortable Distribution Center	ASSEMBLY 30209	6110-01-186-2537
Panel Distribution 200Amp 120V 3PH 5-Wire LEX	ASSEMBLY 30030	6110-01-554-7406
Distribution Center Portable 208Y/120V 60 Amp (15kW)	ASSEMBLY 30133	6110-01-236-3829
GFI 10kW-208/120V 3 Phase 30 Amps Distribution Center Portable	ASSEMBLY 30211	6110-00-205-1637
480V 3 Phase 400 Amps Weatherproof Panel board Assembly Portable	ASSEMBLY 32600	6110-00-186-6623
Panel Power Distribution Box 200 Amp (60kW)	PWR DIST PNL 60 kW	6110-01-236-4637

5.3 Parametric values. The parametric values cited within the characteristic data are the minimum or maximum allowable limits over the specified environmental range. Specified parametric values were determined using the test procedures delineated in MIL-STD-705, Generator Sets, Engine Driven Methods of Tests and Instructions. For a more complete description, see applicable specifications, drawings, and referenced documents.

5.4 Technical Data Packages. The design and performance of the DoD Standard Family of MEPGS and PDISE are defined by Technical Data Packages (TDPs) made up of Detail

Source: https://assist.dla.mil -- Downloaded: 2016-12-11T08:30Z
Check the source to verify that this is the current version before use.

Specifications or Purchased Descriptions, and drawings. PM-MEP provides configuration management of these TDPs. Any issues with the design or performance of the DoD Standard Family of MEPGS should be addressed to PM-MEP at:

Project Manager - Mobile Electric Power

5850 Delafield Road, Bldg 324
Fort Belvoir, Virginia 22060-5809
Phone: (703)704-3162, DSN: 654-3162
Fax: (703)704-3257, DSN: 654-3257
Website: http://www.pm-mep.army.mil
Email: See website

6. ITEMS OF NOTE

(This section contains information of a general or explanatory nature that may be helpful, but not mandatory.)

6.1 Intended use. This standard has been prepared to assist the DoD Project Manager - Mobile Electric Power (PM-MEP) in effectively managing and standardizing Mobile Electric Power Generating Sources (MEPGS) within the DoD. Also, this standard has been prepared for use by all Departments and Agencies of the DoD to select DoD standard MEPGS and ancillary equipment for applications requiring mobile sources of electric power.

6.2 Acquisition requirements. Acquisition documents should specify the title, number and date of this specification.

6.3 National Stock Numbers (NSN). National Stock Numbers for MEPGS are listed in TABLE- V, and NSNs for the service specific Power Distribution Systems are listed in TABLE- VI, and TABLE- VII.

6.4 MEPGS availability. To determine the availability of desired generator sets or associated equipment and to assure proper and timely acquisition of MEPGS, users of this standard are advised to contact PM-MEP at:

Project Manager - Mobile Electric Power

5850 Delafield Road, Bldg 324
Fort Belvoir, Virginia 22060-5809
Phone: (703)704-3162, DSN: 654-3162
Fax: (703)704-3257, DSN: 654-3257
Website: http://www.pm-mep.army.mil
Email: See website

6.5 MEPGS Development Program. The MEPGS development programs are managed by the DoD Project Manager - Mobile Electric Power. If users of this standard cannot find a suitable generator set within the DoD Standard Family of MEPGS as presented in this Standard, they are advised to contact PM-MEP (see 6.4). The PM-MEP office can obtain status of any development program(s) and determine if a suitable power source will be available when needed.

6.6 Items not Army Type-Classified. Army Type-Classification (see 3.32) is a procedure described by AR 70-1 to designate Army materiel acquisition status. Some mobile electric power generating sources included in this document have not been Type-Classified for Army use and are

Source: https://assist.dla.mil -- Downloaded: 2016-12-11T08:30Z
Check the source to verify that this is the current version before use.

identified by "Not Type-Classified for Army Use." These items have been approved for use by other service(s). Other items, such as the Auxiliary Power Units (APUs), have been Army Type-Classified as part of a larger system and are not separately fielded. These items are identified by "Not Separately Type-Classified."

6.7 Non-procurable MEPGS. Appendix C provides characteristic data for non-procurable MEPGS. Information is provided for historical record only.

6.8 Subject term (key word) listing.

Auxiliary Power

Generator set

Power Plant

Power Unit

Power Distribution

Source: https://assist.dla.mil -- Downloaded: 2016-12-11T08:30Z
Check the source to verify that this is the current version before use.

APPENDIX A

DoD Standard Family of Mobile Electric Power Generating Sources

A.1 SCOPE

A.1.1 Scope. This Appendix provides the characteristic data for the current DoD Standard Family of Mobile Electric Power Generating Sources (MEPGS). DoD Directive 4120.11 requires DoD activities to use these MEPGS as power sources for their systems. Data contained in this Appendix is provided to assist the materiel developer in selecting the proper MEPGS for use. This appendix is a mandatory part of this standard. The information contained herein is intended for compliance.

A.2 GENERAL DESCRIPTIONS

A.2.1 Item Descriptions.

A.2.1.1 Military Tactical Generator (MTG). The MTG is a 2 kW diesel engine driven generator set used to meet user requirements of less than 3 kW power. The MTG was introduced into the US military system through the DoD Foreign Comparative Test (FTC) program. It is small, light weight, relatively quiet, and available in 60 Hz, 120V, single phase, and in 28 VDC versions.

A.2.1.2 Advanced Medium Mobile Power Sources. The AMMPS are reliable, quiet, and light weight diesel engine driven generator sets in the 5 kW to 60 kW range. The AMMPS incorporate commercial components engineered to meet military requirements and are procured in large quantities so they are relatively inexpensive.

A.2.1.3 Tactical Quiet Generator (TQG). The TQGs are reliable, quiet, and light weight diesel engine driven generator sets in the 3 kW to 200 kW range. The TQGs incorporate commercial components engineered to meet military requirements and are procured in large quantities so they are relatively inexpensive.

A.2.1.4 Deployable Power Generation and Distribution System (DPGDS). The DPGDS is diesel engine driven and generates 750 kW, 3 phase, 3800/4160 V, 50/60 Hz power. DPGDS replaces the 500 kW and 750 kW Military Standard generator sets.

A.2.1.5 Trailers. Several trailers are used in Power Unit and Power Plant MEPGS systems depending on size, weight and configuration.

a. Light Tactical Trailer (LTT). The LTT is a 1-1/2 ton trailer designed to match the cross country mobility of the High Mobility Multipurpose Wheeled Vehicle (HMMWV) while carrying a full payload.

b. M200A1. The M200A1 is a 2-1/2 ton trailer modified to carry the extra weight of a generator set and associated hardware. The trailer is now configured with single radial tires in lieu of the duel bias tires although both configurations are presently in the field.

c. M1061A1. The M1061A1 is a 5 ton trailer.

A.3 DETAILED DESCRIPTIONS

A.3.1 Detailed descriptions. Detailed descriptions are contained in the Characteristic Data paragraphs, summarized in TABLE A- I, arranged by power rating capacity.

Source: https://assist.dla.mil -- Downloaded: 2016-12-11T08:30Z
Check the source to verify that this is the current version before use.

APPENDIX A

TABLE A- I Guide to the Characteristic Data

SIZE	Paragraph	ITEM DESCRIPTION	MODEL NO.	FIG	PAGE
2 kW	A.3.1.1	MTG 28 VDC, DED, Tubular Frame	MEP-501A	FIGURE A- 1	27
		MTG 60 Hz, DED, Tubular Frame	MEP-531A	FIGURE A- 1	27
3 kW	A.3.1.2	TQG 60 Hz, DED, Skid Mounted	MEP-831A	FIGURE A- 2	29
		TQG 400 Hz, DED, Skid Mounted	MEP-832A	FIGURE A- 2	29
		TQG Power Plant, 60 Hz	PP-AN/MJQ-42	FIGURE A- 3	30
		TQG Power Plant, 60 Hz	PP-AN/MJQ-43A	FIGURE A- 4	31
5 kW	A.3.1.3	AMMPS 60 Hz, DED, Skid Mounted	MEP-1030	FIGURE A- 5	33
		AMMPS 400 Hz, DED, Skid Mounted	MEP-1031	FIGURE A- 5	33
		AMMPS Power Unit, 60 Hz	PU-2001	FIGURE A- 6	34
		AMMPS Power Plant, 60 Hz	PP-3001	FIGURE A- 7	35
		AMMPS Power Plant, 60 Hz	PP-3101	FIGURE A- 8	37
10 kW	A.3.1.4	AMMPS 60 Hz, DED, Skid Mounted	MEP-1040	FIGURE A- 9	39
		AMMPS 400 Hz, DED, Skid Mounted	MEP-1041	FIGURE A- 9	39
		AMMPS Power Unit, 60 Hz	PU-2002	FIGURE A- 10	40
		AMMPS Power Unit, 400 Hz	PU-2012	FIGURE A- 11	41
		AMMPS Power Plant, 60 Hz	PP-3102	FIGURE A- 12	42
15 kW	A.3.1.5	AMMPS 50/60 Hz, DED, Skid Mounted	MEP-1050	FIGURE A- 13	44
		AMMPS 400 Hz, DED, Skid Mounted	MEP-1051	FIGURE A- 13	44
		AMMPS Power Unit, 50/60 Hz	PU-2003	FIGURE A- 14	45
		AMMPS Power Unit, 50/60 Hz	PU-2101	FIGURE A- 15	46
		AMMPS Power Unit, 400 Hz	PU-2111	FIGURE A- 16	48
		AMMPS Power Plant, 50/60 Hz	PP-3003	FIGURE A- 17	50
30 kW	A.3.1.6	AMMPS 50/60 Hz, DED, Skid Mounted	MEP-1060	FIGURE A- 18	53
		AMMPS 400 Hz, DED, Skid Mounted	MEP-1061	FIGURE A- 18	53
		AMMPS Power Unit, 50/60 Hz	PU-2102	FIGURE A- 19	54
		AMMPS Power Unit, 400 Hz	PU-2112	FIGURE A- 20	56
		AMMPS Power Plant, 50/60 Hz	PP-3105	FIGURE A- 21	58
60 kW	A.3.1.7	AMMPS 50/60 Hz, DED, Skid Mounted	MEP-1070	FIGURE A- 22	61
		AMMPS 400 Hz, DED, Skid Mounted	MEP-1071	FIGURE A- 22	61
		AMMPS Power Unit, 50/60 Hz	PU-2103	FIGURE A- 23	62
		AMMPS Power Unit, 400 Hz	PU-2113	FIGURE A- 24	63
		AMMPS Power Plant, 50/60 Hz	PP-3106	FIGURE A- 25	64
		AMMPS Power Plant, 50/60 Hz	PP-3206	FIGURE A- 26	66
		AMMPS Power Plant, 400 Hz	PP-3216	FIGURE A- 27	68
100 kW	A.3.1.8	TQG 50/60 Hz, DED, Skid Mounted	MEP-807A	FIGURE A- 28	71
		TQG Power Unit, 50/60 Hz	PU-807A	FIGURE A- 29	72
200 kW	A.3.1.9	TQG 50/60 Hz, DED, Skid Mounted	MEP-809A	FIGURE A- 30	75
		TQG Power Unit, 50/60 Hz	PU-809A	FIGURE A- 31	76

Source: https://assist.dla.mil -- Downloaded: 2016-12-11T08:30Z
Check the source to verify that this is the current version before use.

This Page Intentionally Left Blank

Source: https://assist.dla.mil -- Downloaded: 2016-12-11T08:30Z
Check the source to verify that this is the current version before use.

A.3.1.1 Military Tactical Generator Set, DED, 2 kW

TABLE A- II Characteristic Data for MEP-531A and MEP-501A

Identification Data		
Model	MEP-531A	MEP-501A
Description	2 kW MTG Set, 60 Hz, DED, Tubular Frame	2 kW MTG Set, 28 VDC, DED, Tubular Frame
NSN	6115-01-435-1565	6115-01-435-1567
LIN	G36237	G36169
SSN	M59400	M59400
Physical Characteristic		
Dimensions LWH (in)	30 x16 x 22	
Ship Cube (ft^3)	6	
Wet Weight (lbs)	158	138
Engine	Yanmar L48AE-DEG Diesel, 1 cylinder/4 stroke, 4.2 horsepower @ 3600 RPM, air cooled, 24 VDC start from NATO slave receptacle, recoil pull starter.	
Instrumentation	Voltmeter, ammeter, hour meter, frequency meter (AC only).	
Fuels	Diesel DL-1, DL-2 and JP-8	
Fuel Tank Capacity (Gal)	1.6	
Performance Characteristic		
Power Rating	2kW, 1.0 pf @4000 ft/95°F. Derate: 1.3%/328 ft from 4000 to 8000 ft	
Environmental Capability	-40°F to 120°F, rain, humidity, altitude, sand/ dust, rail transport, -65°F cold storage, salt spray, fungus, 15° incline	
Protective Devices	Trip circuit breaker for overload/short circuit. Automatic shutdown for low oil pressure.	
Fuel consumption	0.33 gal/hour @ rated load	0.33 gal/hour @ rated load
Human Factors	MIL-STD-1474: 4 soldier portable: operable in chemical/arctic clothing.	
Noise	79 dBA @ 7 meters (23 feet)	
Reliability (MTBF)	818 hr	490 hr
Maintenance Ratio	0.033 – organization	0.008 – direct support
Electrical Characteristic		
Basic Design	Drip proof generator enclosure, fungus & moisture treated, solid state voltage regulator, brush type 2 pole alternator, solderless connectors, AC alternator: Mechron Power, DC Alternator: Balmar.	
EMI	Not protected	
EMP	Not protected	
Motor load	Not rated	
Voltage Connection	120 V, 1 phase, 2 wire	28 VDC, 2 wire
Voltage adj. Range	114 - 126 V	26.6 - 32.0 V
Freq. adj. Range	±5.5%	N/A

Electrical Performance				
Electric Power Quality		**Frequency**	**AC Voltage**	**DC Voltage**
Regulation		5.6%	4%	4%
Voltage modulation			2%	
Short term steady state stability (30 sec)		3% bandwidth	2% bandwidth	2% bandwidth
Long term steady state stability (4 hr)		3% bandwidth	4% bandwidth	2% bandwidth
Application of rated load	transient	8% undershoot,	30% dip,	30% dip,
	recovery time	4 sec	3 sec	1 sec
Rejection of rated load	transient	10% overshoot,	30% rise,	40% rise,
	recovery time	5 sec	3 sec	0.5 sec
Max waveform deviation factor			16%	
Individual waveform harmonic			15%	
DC ripple				7%

Source: https://assist.dla.mil -- Downloaded: 2016-12-11T08:30Z
Check the source to verify that this is the current version before use.

TABLE A- II Characteristic Data for MEP-531A and MEP-501A Continued.

Optional Equipment			
Description	**NSN**	**Weight (lbs)**	**Effect on Dimensions (in)**
Auxiliary Fuel System	See TM 9-6115-673-13&P		
Technical Manuals			
Army	**Air Force**	**Marine Corps**	**Navy**
TM 9-6115-673-13&P	TO 35C2-3-512-1	None	None

MEP-501A, 28 VDC

MEP-531A, 120 V, 60 Hz

has an additional meter (frequency) and a convenience receptacle

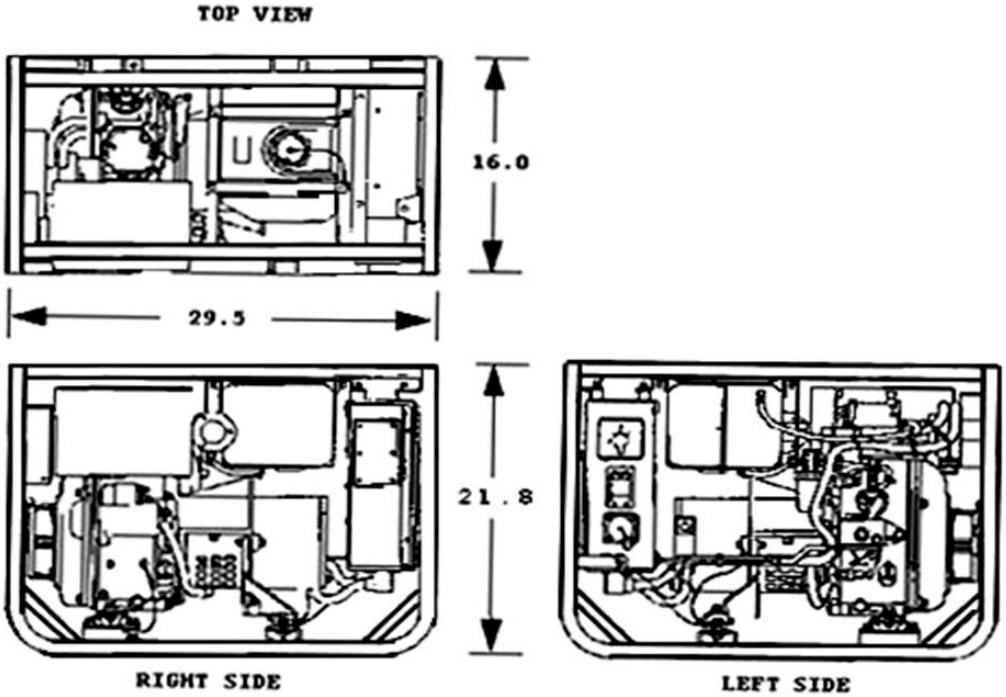

FIGURE A- 1 Military Tactical Generator Set, 2 kW

Source: https://assist.dla.mil -- Downloaded: 2016-12-11T08:30Z
Check the source to verify that this is the current version before use.

A.3.1.2 Tactical Quiet Generator Set, DED, 3 kW.

TABLE A- III Characteristic Data for MEP-831A and MEP-832A

Identification Data		
Model	MEP-831A	MEP-832A
Description	3 kW TQG Set, 60 Hz, DED, Skid Mtd	3 kW TQG, 400 Hz, DED, Skid Mtd
NSN	6115-01-285-3012	6115-01-287-2431
LIN	G18358	G74847
SSN	M59400	M59400
Specification		
Trailer Configuration	PP-AN/MJQ-42: FIGURE A-3 PP-AN/MJQ-43A: FIGURE A-4	None
Physical Characteristic		
Dimensions LWH (in)	35 x 28 x 27	
Ship Cube (ft^3)	15	
Wet Weight (lbs)	326 (full tank + battery), 272 (1 hr fuel, no battery)	
Engine	Yanmar L70AE-D/DE Diesel, 1 cylinder/4 stroke, 6.7 hp @ 3600 RPM (variable speed), rope and 24 VDC start, air-cooled.	
Instrumentation	Emergency stop, Fuel level, Hour meter, Voltmeter, Load meter, Battle short, AC interrupt, Fault indicators	
Fuels	Diesel DL-1, DL-2; Jet Fuel JP-8	
Fuel Tank Capacity (Gal)	4	
Performance Characteristic		
Power Rating	3 kW, 0.8 pf @ 1000 ft/107°F.	
Environmental Capability	-25°F to 120°F, rain, humidity, altitude, sand/dust, transportation, 9 inch drop, vibration, cold storage, salt spray, fungus, 15° incline.	
Protective Devices	Engine High Temp, Low Oil Pressure, No Fuel, Overvoltage, Overload, Short Circuit	
Fuel consumption	0.33 gal/hour @ rated load	
Human Factors	MIL-STD-1474; 6 soldier portable.	
Noise	72 dBA @ 7 m (23 feet)	
Reliability (MTBF)	500 hr @ 80% Lower Confidence Level (LCL)	
Maintenance Ratio	less than 0.05	
Electrical Characteristic		
Basic Design	Fermont Permanent Magnet Variable Speed Generator, Technology Research Corp (TRC) Solid State Inverter (60Hz and 400Hz).	
EMI	Meets MIL-STD-461C, Part 9 UM04	
EMP	HAEMP IAW MIL-STD-2169	
Motor load	Not rated	
Voltage Connection	120/240 V, 1ph, 3 wire	120 V, 1ph, 2 wire
Voltage adj. Range	228 – 252 V	114 – 126 V
Freq. adj. Range	± 3%	± 3%

Electrical Performance			
Electric Power Quality		**Frequency**	**AC Voltage**
Regulation		3%	4%
Voltage modulation			2.5%
Short term steady state stability (30 sec)		4% bandwidth	2% bandwidth
Long term steady state stability (4 hr)		4% bandwidth	4% bandwidth
Application of rated load	transient	4% under	30% dip
	recovery time	4 sec	3 sec
Rejection of rated load	transient	5 % over	30% rise
	recovery time	6 sec	3 sec
Max waveform deviation factor			7%
Individual waveform harmonic			4%

Source: https://assist.dla.mil -- Downloaded: 2016-12-11T08:30Z
Check the source to verify that this is the current version before use.

TABLE A-II Characteristic Data for MEP-831A and MEP-832A Continued.

Optional Equipment			
Description	**NSN**	**Weight (lbs)**	**Effect on Dimensions (in)**
None			
Technical Manuals			
Army	**Air Force**	**Marine Corps**	**Navy**
TM 9-6115-639-13&P	TO 35C2-3-386-51W/IPB	TM 10155A-OI/1	
TM 9-6115-639-13&P	TO 35C2-3-386-51W/IPB	TM 10155A-OI/1	
TM9-2815-257-24	TO 38G1-128-2	TM 10155A/2815-24/3	
TM9-2815-257-24P	TO 38G1-128-4	TM 10155A/2815-24P/4	

MEP-831A (60 Hz) has convenience outlet and fault protection

Radii: Access door = 25.4”, Output Terminal door = 10.0”, Control Panel door =8.5”.

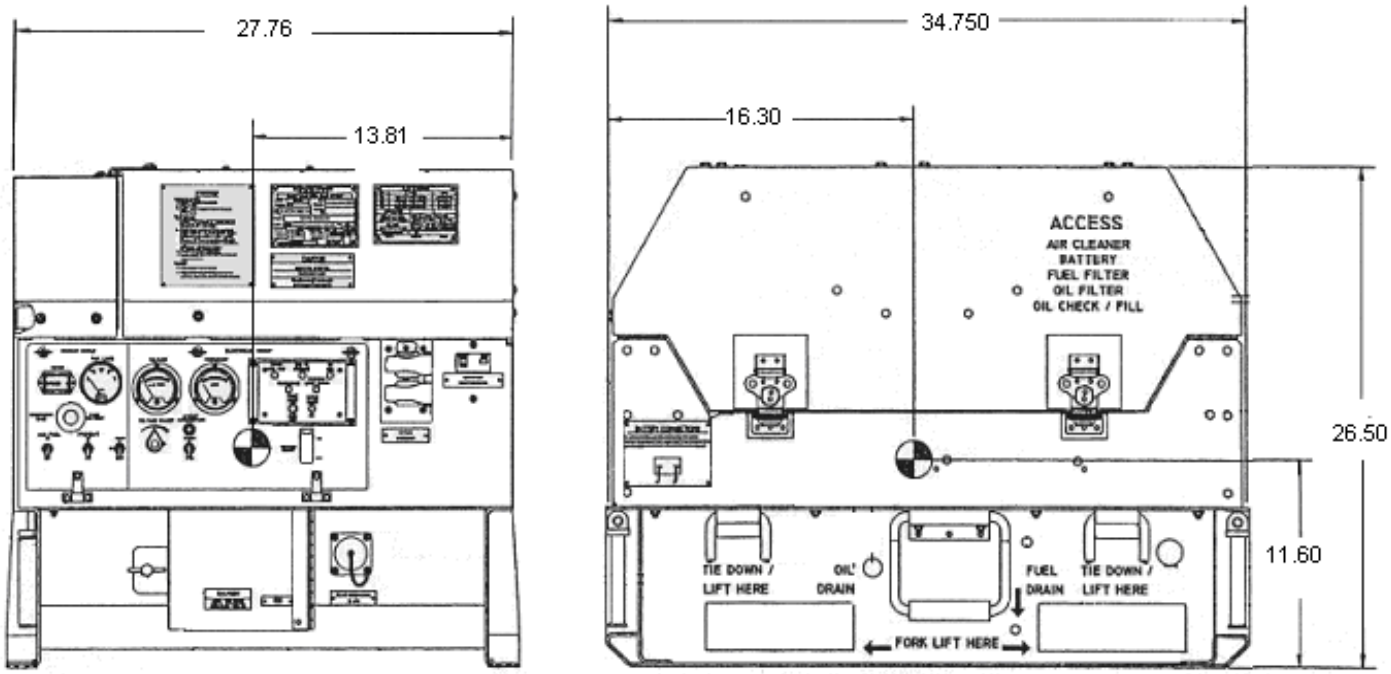

FIGURE A- 2 Tactical Quiet Generator Set, 3 kW

Source: https://assist.dla.mil -- Downloaded: 2016-12-11T08:30Z
Check the source to verify that this is the current version before use.

APPENDIX A

Identification Data			
Model	**NSN**	**LIN**	**SSN**
PP-AN/MJQ-42	6115-01-322-8583	P42466	R62700
Physical Characteristic			
Dimension: LWH (in)	**Ship Cube (ft^3)**	**Wet Weight (lbs)**	**Ship Weight (lbs)**
145 x 84 x 76	535.69	2900	2412
Documentation			
Technical Manual	**Specification**	**Camouflage Drawing**	**Top Assembly**
TM 9-6115-658-13&P	MIL-P-53132/2	97403-13226E7477	TA-13229E5720

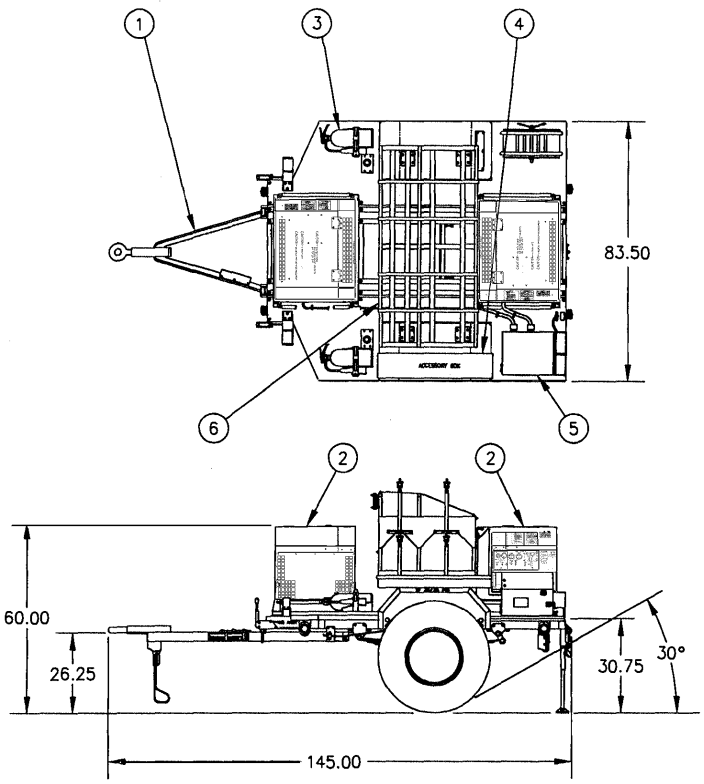

FIND NO.	COMPONENT	QTY	IDENTIFIER
1	Light Tactical Trailer (LTT)	1	97403-13230E6565
2	MEP-831A	2	6115-01-285-3012
3	Fire extinguisher, 5 lb., A-A-1106	2	4210-00-270-4512
4	Accessory box	1	97403-13229E7946
5	Switch box	1	97403-13230E6950
6	Rack Assembly (includes cable reel)	1	

FIGURE A- 3 PP-AN/MJQ-42 - TQG Power Plant, 3 kW, 60 Hz

Source: https://assist.dla.mil -- Downloaded: 2016-12-11T08:30Z
Check the source to verify that this is the current version before use.

Identification Data			
Model	**NSN**	**LIN**	**SSN**
PP-AN/MJQ-43A	6115-01-322-8582	P42534	R62700
Physical Characteristic			
Dimension: LWH (in)	**Ship Cube (ft^3)**	**Wet Weight (lbs)**	**Ship Weight (lbs)**
135 x 86 x 60	403	2212	2187
Documentation			
Technical Manual	**Specification**	**Camouflage Drawing**	**Top Assembly**
TM 9-6115-658-13&P	MIL-P-53132/1	97403-13226E7477	TA-13229E5730

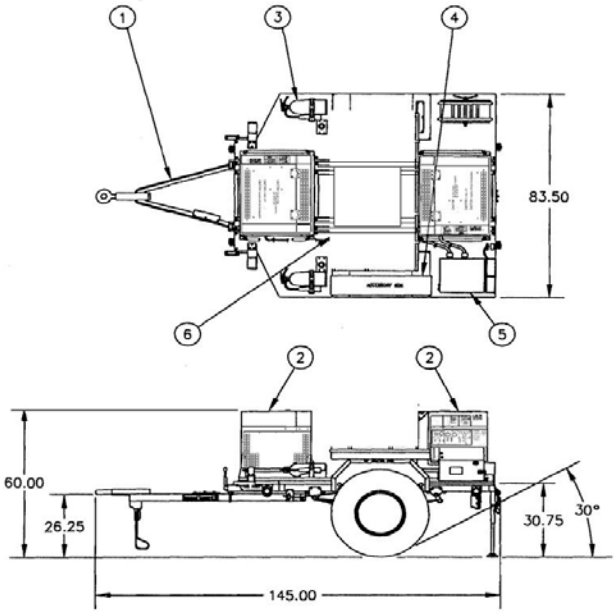

FIND NO.	COMPONENT	QTY	IDENTIFIER
1	Light Tactical Trailer (LTT)	1	97403-13230E6565
2	MEP-831A	2	6115-01-285-3012
3	Fire extinguisher, 5 lb., A-A-1106	2	4210-00-270-4512
4	Accessory box	1	97403-13229E7946
5	Switch box	1	97403-13230E6950

FIGURE A- 4 PP-AN/MJQ-43A - TQG Power Plant, 3 kW, 60 Hz

Source: https://assist.dla.mil -- Downloaded: 2016-12-11T08:30Z
Check the source to verify that this is the current version before use.

A.3.1.3 Advanced Medium Mobile Power Sources (AMMPS), DED 5 kW

TABLE A- IV Characteristic Data for MEP-1030 and MEP-1031

Identification Data			
Model	MEP-1030		MEP-1031
Description	5 kW AMMPS, 60 Hz, DED, Skid Mtd		5 kW AMMPS, DED, 400Hz, Skid Mtd
NSN	6115-01-561-7329		6115-01-561-7438
LIN	Z01328		Z01329
SSN	M53500		M53500
Purchase Description	PD 6115-0125		PD 6115-0125
Trailer Configuration	PU- 2001: FIGURE A- 6; PP-3001: FIGURE A- 7; PP-3101: FIGURE A- 8		None
Physical Characteristic			
Dimensions LWH (in)	45 x 32 x 36		
Ship Cube (ft^3)	30		
Wet Weight (lbs)	810		805
Engine	Kubota D902-IV, 2 cylinder/4 stroke, 10.1 hp @1800 RPM, 24VDC start, liquid-cooled.		
Instrumentation	Hour meter, voltmeter, frequency, amps (kilowatts), oil pressure, fuel, coolant temperature, battery amps, emergency stop, battle short.		
Fuels	Diesel DF-2D, DF-1D; Jet Fuel: JP-8, JP-5		
Fuel Tank Capacity (Gal)	3.8		
Performance Characteristic			
Power Rating	5kW, 0.8 pf @ 4000ft/120°F; Derate: 3.5%/1000 ft from 4000 to 10000 ft		
Environmental Capability	-25°F (-50°F with Winterization Kit) to 125°F (3% duration for every 18°F between 125°F and 135°F), humidity, sand/dust, rain, cold storage: -60°F, salt spray, solar radiation, wind, ice glaze/freezing rain/hoarfrost, 15° incline		
Protective Devices	Automatic shut down for overspeed. Automatic drop load for short circuit. Automatic shut down with emergency bypass for low oil pressure, high temperature, and low fuel level. Drop load with emergency bypass for under/over voltage, overload, and reverse power. Battery discharge warning.		
Fuel consumption	0.38 gal/hour @ rated load		0.42 gal/hour @ rated load
Human Factors	MIL-STD-1474F		
Noise	68 dBA @ 7 meters (23 feet)		
Reliability (MTBEFF)	750 hours		750 hours
Maintenance Ratio	0.025		
Electrical Characteristic			
Basic Design	Synchronous generator, drip-proof generator enclosure, brushless rotary exciter, solderless connectors, 60Hz: Cummins alternator, 4 pole; 400Hz: Cummins alternator, 24 pole. Convenience receptacle on set.		
EMI	Meets MIL-STD-461E for conducted emissions, conducted susceptibility, radiated emissions, and radiated susceptibility		
EMP	HAEMP IAW MIL-STD-2169		
Motor load	Shall start a NEMA Code F 5hp motor		
Voltage Connection	120/240V, 1ph, 3 wire	120V, 1ph, 2 wire	120/208V, 3ph, 4 wire
Voltage adj. Range	228-252V	114-126V	205-240V
Freq. adj. Range	±3%		

Electrical Performance			
Electric Power Quality		**Frequency**	**AC Voltage**
Regulation		3%	3%
Voltage modulation			2.5%
Short term steady state stability (30 sec)		2% bandwidth	2% bandwidth
Long term steady state stability (4 hr)		3% bandwidth	4% bandwidth
Application of rated load	transient	4%	20 % dip
	recovery time	4 sec	3 sec
Rejection of rated load	transient	4%	30% rise
	recovery time	4 sec	3 sec
Max waveform deviation factor			6% (1 phase); 5% (3 phase)
Individual waveform harmonic			3% (1 phase); 2% (3 phase)

Source: https://assist.dla.mil -- Downloaded: 2016-12-11T08:30Z
Check the source to verify that this is the current version before use.

Optional Equipment			
Description	**NSN**	**Technical Bulletin**	**Effect on Dimensions (in)**
Winterization kit	6115-01-589-2624		None (internal)
Technical Manuals			
Army	**Air Force**	**Marine Corps**	**Navy**
TM 9-6115-749-10	TO 35C2-3-531-1	TM 09292B-O1/3	TM 7610-LL-L1A-0018
TM 9-6115-749-24&P	TO 35C2-3-531-2	TM 09292B-O1/1	TM 7610-LL-L1A-0019

MEP-1030 or MEP-1031

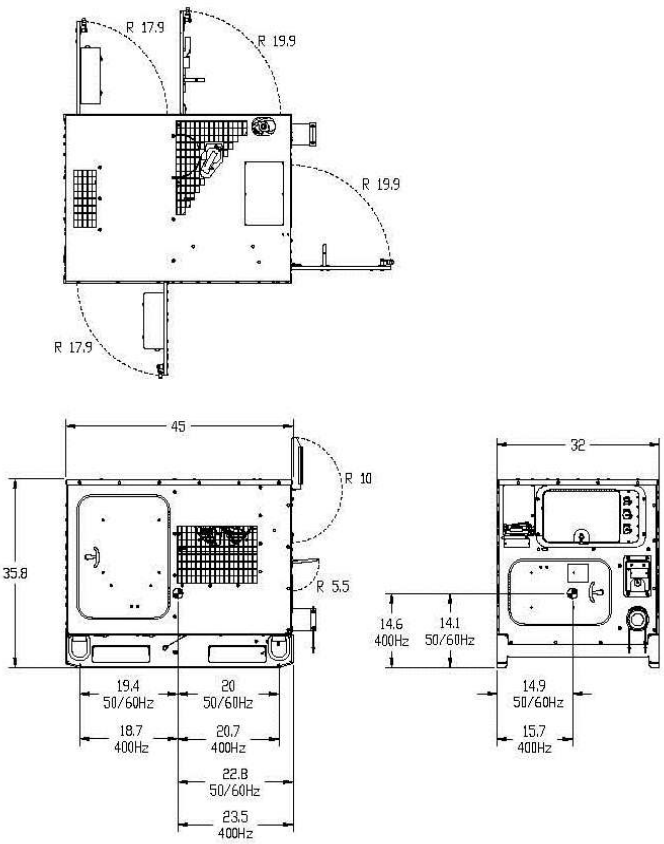

FIGURE A- 5 AMMPS Generator Set, 5 kW

Source: https://assist.dla.mil -- Downloaded: 2016-12-11T08:30Z
Check the source to verify that this is the current version before use.

APPENDIX A

Identification Data			
Model	**NSN**	**LIN**	**SSN**
PU-2001	6115-01-562-3992	Z01420	R62700
Physical Characteristic			
Dimension: LWH (in)	**Ship Cube (ft^3)**	**Wet Weight (lbs)**	**Ship Weight (lbs)**
135 x 86 x 71	477	2221	2200
Documentation			
Technical Manual	**Specification**	**Camouflage Drawing**	**Top Assembly**
TM 9-6115-755-13&P		30554-04-21181	TA-04-2001

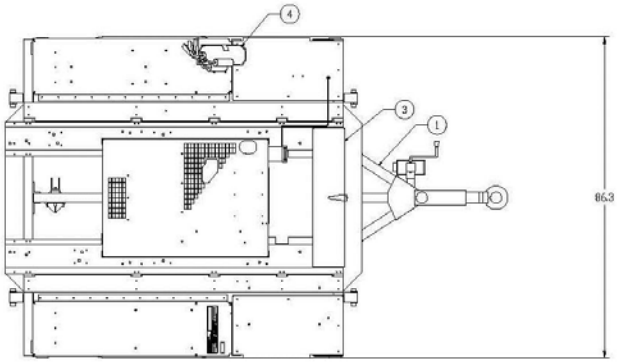

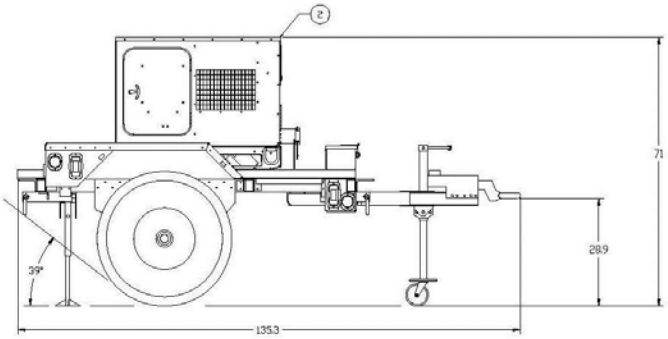

FIND NO.	COMPONENT	QTY	IDENTIFIER
1	Light Tactical Trailer (LTT)	1	97403-13230E6565
2	MEP-1030	1	6115-01-561-7329
3	Accessory box	1	97403-13229E7946
4	Fire extinguisher, 5 lb., A-A-1106	1	4210-00-270-4512

FIGURE A- 6 PU-2001 - AMMPS Power Unit, 5 kW, 60 Hz

Source: https://assist.dla.mil -- Downloaded: 2016-12-11T08:30Z
Check the source to verify that this is the current version before use.

Identification Data			
Model	**NSN**	**LIN**	**SSN**
PP-3001	6115-01-562-3700	Z01422	R62700
Physical Characteristic			
Dimension: LWH (in)	**Ship Cube (ft^3)**	**Wet Weight (lbs)**	**Ship Weight (lbs)**
135 x 86 x 71	477	3087	3040
Documentation			
Technical Manual	**Specification**	**Camouflage Drawing**	**Top Assembly**
TM 9-6115-755-13&P		30554-04-21186	TA-04-3001

FIGURE A- 7 PP-3001 - AMMPS Power Plant, 5 kW, 60 Hz

Source: https://assist.dla.mil -- Downloaded: 2016-12-11T08:30Z
Check the source to verify that this is the current version before use.

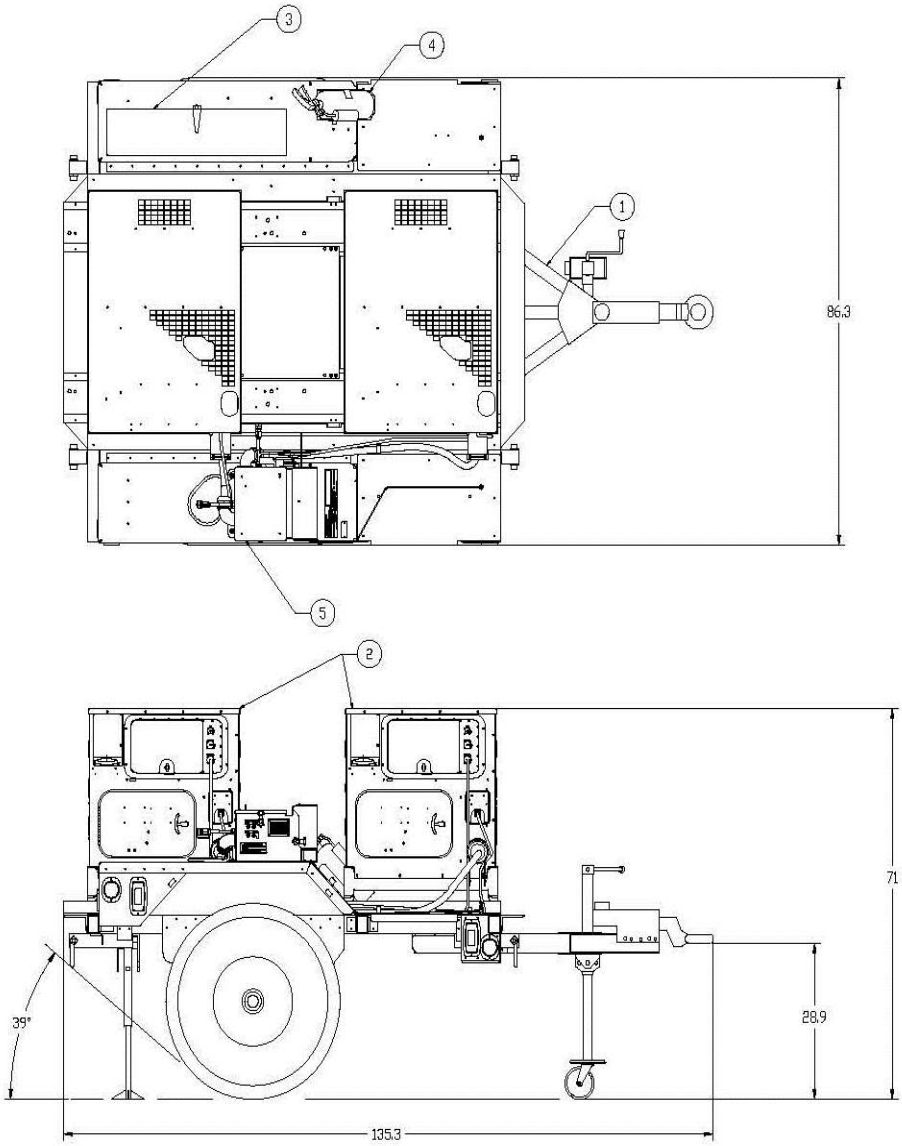

FIND NO.	COMPONENT	QTY	IDENTIFIER
1	Light Tactical Trailer (LTT)	1	97403-13230E6565
2	MEP-1030	2	6115-01-561-7329
3	Accessory box	1	97403-13229E7946
4	Fire extinguisher, 5 lb., A-A-1106	1	4210-00-270-4512
5	Switch Box	1	30554-04-20835

FIGURE A- 7 PP-3001 - AMMPS Power Plant, 5 kW, 60 Hz (continued)

Source: https://assist.dla.mil -- Downloaded: 2016-12-11T08:30Z
Check the source to verify that this is the current version before use.

Identification Data			
Model	**NSN**	**LIN**	**SSN**
PP-3101	6115-01-562-3675	Z01428	R62700
Physical Characteristic			
Dimension: LWH (in)	**Ship Cube (ft^3)**	**Wet Weight (lbs)**	**Ship Weight (lbs)**
165 x 96 x 73.75	676	4307	4215
Documentation			
Technical Manual	**Specification**	**Camouflage Drawing**	**Top Assembly**
TM 9-6115-755-13&P		30554-04-21306	TA-04-3101

NO PHOTO AVAILABLE

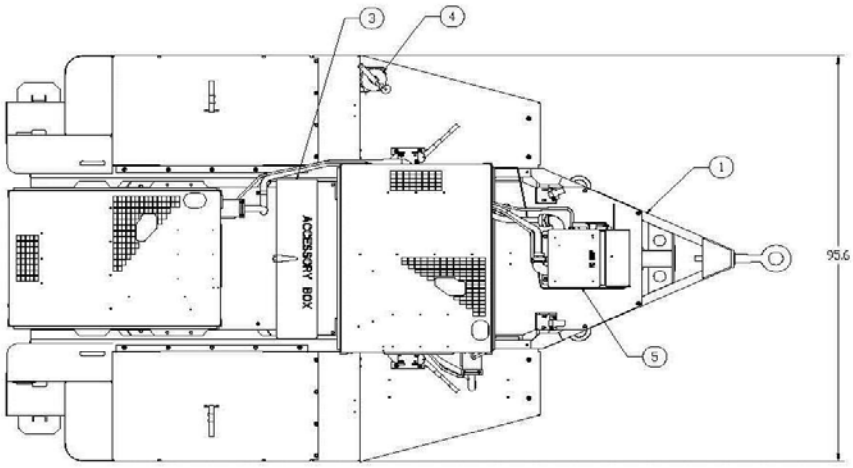

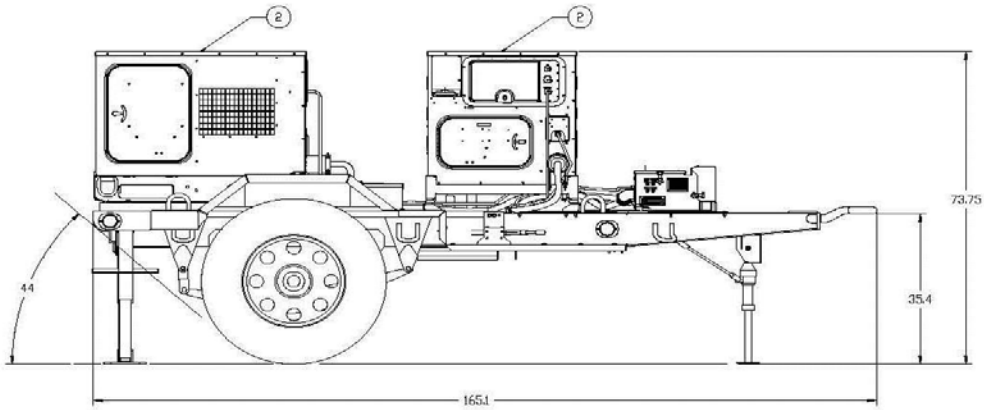

FIND NO.	COMPONENT	QTY	IDENTIFIER
1	2 1/2 Ton Modified Trailer, M200A1	1	30554-04-21234
2	MEP-1030	2	6115-01-561-7329
3	Accessory box	1	97403-13229E7946
4	Fire extinguisher, 5 lb., A-A-1106	1	4210-00-270-4512
5	Switch Box	1	30554-04-21329

FIGURE A- 8 PP-3101 - AMMPS Power Plant, 5 kW, 60 Hz

Source: https://assist.dla.mil -- Downloaded: 2016-12-11T08:30Z
Check the source to verify that this is the current version before use.

A.3.1.4 Advanced Medium Mobile Power Sources (AMMPS), DED 10 kW

TABLE A- V Characteristic Data for MEP-1040 and MEP-1041

Identification Data			
Model	MEP-1040		MEP-1041
Description	10 kW AMMPS, 60 Hz, DED, Skid Mtd		10 kW AMMPS, DED, 400Hz, Skid Mtd
NSN	6115-01-561-7455		6115-01-561-7466
LIN	Z01330		Z01331
SSN	M53500		M53500
Purchase Description	PD 6115-0125		PD 6115-0125
Trailer Configuration	PU- 2002:FIGURE A- 10; PP-3102: FIGURE A- 12		PU-2012: FIGURE A- 11
Physical Characteristic			
Dimensions LWH (in)	55 x 32 x 36		
Ship Cube (ft^3)	36.7		
Wet Weight (lbs)	1060		1070
Engine	Yanmar 3TNV84T-BMCU, 3 cylinder/4 stroke, 24.5hp @1800 RPM, 24VDC start, liquid-cooled.		
Instrumentation	Hour meter, voltmeter, frequency, amps (kilowatts), oil pressure, fuel, coolant temperature, battery amps, emergency stop, battle short.		
Fuels	Diesel DF-2D, DF-1D; Jet Fuel: JP-8, JP-5		
Fuel Tank Capacity (Gal)	6.3		
Performance Characteristic			
Power Rating	10kW, 0.8 pf @ 4000ft/120°F; Derate: 3.5%/1000 ft from 4000 to 10000 ft		
Environmental Capability	-25°F (-50°F with Winterization Kit) to 125°F (3% duration for every 18°F between 125°F and 135°F), humidity, sand/dust, rain, cold storage: -60°F, salt spray, solar radiation, wind, ice glaze/freezing rain/hoarfrost, 15° incline		
Protective Devices	Automatic shut down for overspeed. Automatic drop load for short circuit. Automatic shut down with emergency bypass for low oil pressure, high temperature, and low fuel level. Drop load with emergency bypass for under/over voltage, overload, and reverse power. Battery discharge warning.		
Fuel consumption	0.61 gal/hour @ rated load		0.74 gal/hour @ rated load
Human Factors	MIL-STD-1474F		
Noise	68 dBA @ 7 meters (23 feet)		
Reliability (MTBEFF)	750 hours		750 hours
Maintenance Ratio	0.025		
Electrical Characteristic			
Basic Design	Synchronous generator, drip-proof generator enclosure, brushless rotary exciter, solderless connectors, 60Hz: Cummins alternator, 4 pole; 400Hz: Cummins alternator, 24 pole. Convenience receptacle on set.		
EMI	Meets MIL-STD-461E for conducted emissions, conducted susceptibility, radiated emissions, and radiated susceptibility		
EMP	HAEMP IAW MIL-STD-2169		
Motor load	Shall start a NEMA Code F 10hp motor		
Voltage Connection	120/240V, 1ph, 3 wire	120V, 1ph, 2 wire	120/208V, 3ph, 4 wire
Voltage adj. Range	228-252V	114-126V	205-240V
Freq. adj. Range	±3%		

Electrical Performance			
Electric Power Quality		**Frequency**	**AC Voltage**
Regulation		3%	3%
Voltage modulation			2.5%
Short term steady state stability (30 sec)		2% bandwidth	2% bandwidth
Long term steady state stability (4 hr)		3% bandwidth	4% bandwidth
Application of rated load	transient	4%	20 % dip
	recovery time	4 sec	3 sec
Rejection of rated load	transient	4%	30% rise
	recovery time	4 sec	3 sec
Max waveform deviation factor			6% (1 phase); 5% (3 phase)
Individual waveform harmonic			3% (1 phase); 2% (3 phase)

Source: https://assist.dla.mil -- Downloaded: 2016-12-11T08:30Z
Check the source to verify that this is the current version before use.

Optional Equipment			
Description	**NSN**	**Technical Bulletin**	**Effect on Dimensions (in)**
Winterization kit	6115-01-589-2624		None (internal)
Technical Manuals			
Army	**Air Force**	**Marine Corps**	**Navy**
TM 9-6115-750-10	TO 35C2-3-532-1	TM 11783A/11784A-O1	TM 7610-LL-L1A-0021
TM 9-6115-750-24&P	TO 35C2-3-532-2	TM 11793A/11784A-O1/2	TM 7610-LL-L1A-0022

MEP-1040 or MEP-1041

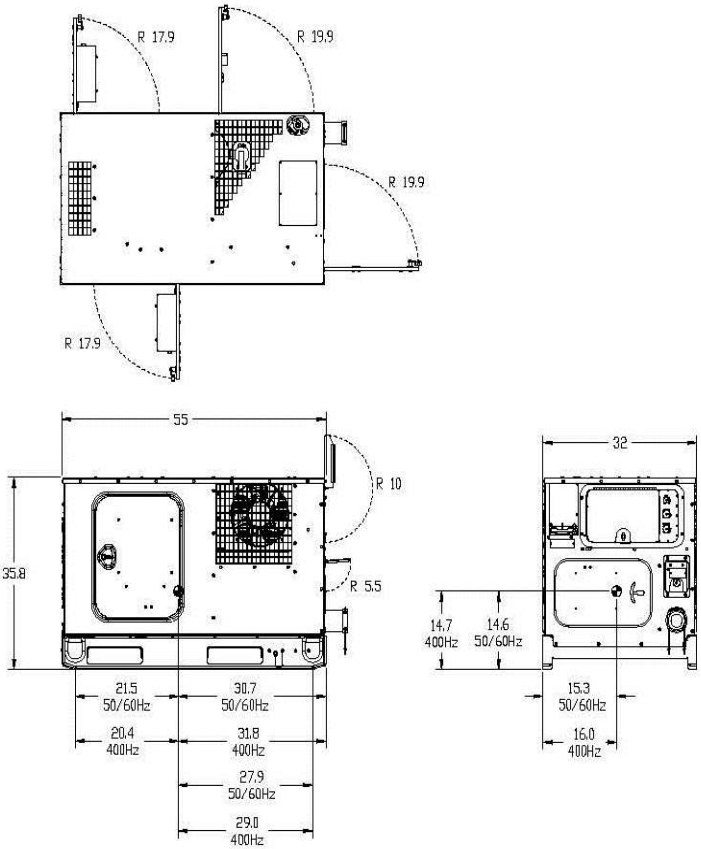

FIGURE A- 9 AMMPS Generator Set, 10 kW

Source: https://assist.dla.mil -- Downloaded: 2016-12-11T08:30Z
Check the source to verify that this is the current version before use.

APPENDIX A

Identification Data			
Model	**NSN**	**LIN**	**SSN**
PU-2002	6115-01-562-4010	Z01414	R62700
Physical Characteristic			
Dimension: LWH (in)	**Ship Cube (ft^3)**	**Wet Weight (lbs)**	**Ship Weight (lbs)**
135 x 86 x 71	477	2499	2460
Documentation			
Technical Manual	**Specification**	**Camouflage Drawing**	**Top Assembly**
TM 9-6115-756-13&P		30554-04-21182	TA-04-2002

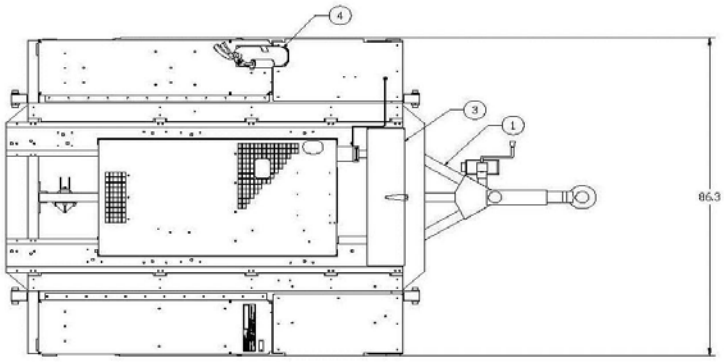

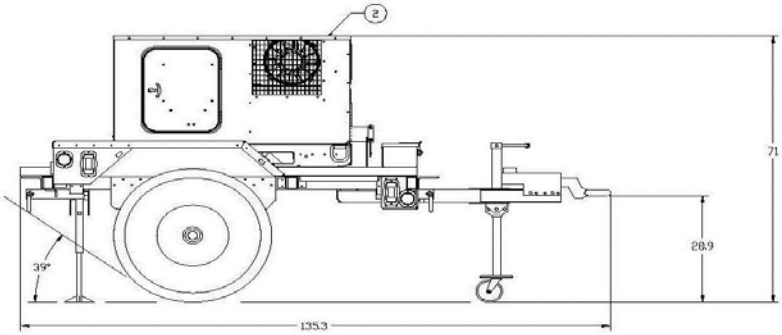

FIND NO.	COMPONENT	QTY	IDENTIFIER
1	Light Tactical Trailer (LTT)	1	97403-13230E6565
2	MEP-1040	1	6115-01-561-7438
3	Accessory box	1	97403-13229E7946
4	Fire extinguisher, 5 lb., A-A-1106	1	4210-00-270-4512

FIGURE A- 10 PU-2002 - AMMPS Power Unit, 10 kW, 50/60 Hz

Source: https://assist.dla.mil -- Downloaded: 2016-12-11T08:30Z
Check the source to verify that this is the current version before use.

APPENDIX A

Identification Data			
Model	**NSN**	**LIN**	**SSN**
PU-2012	6115-01-562-3907	Z01423	R62700
Physical Characteristic			
Dimension: LWH (in)	**Ship Cube (ft^3)**	**Wet Weight (lbs)**	**Ship Weight (lbs)**
135 x 86 x 71	477	2514	2470
Documentation			
Technical Manual	**Specification**	**Camouflage Drawing**	**Top Assembly**
TM 9-6115-756-13&P		30554-04-21182	TA-04-2012

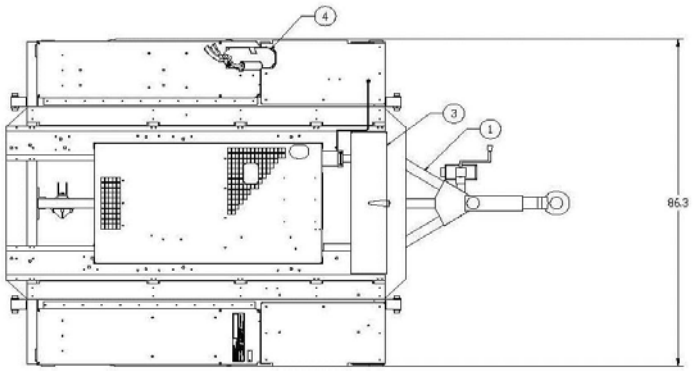

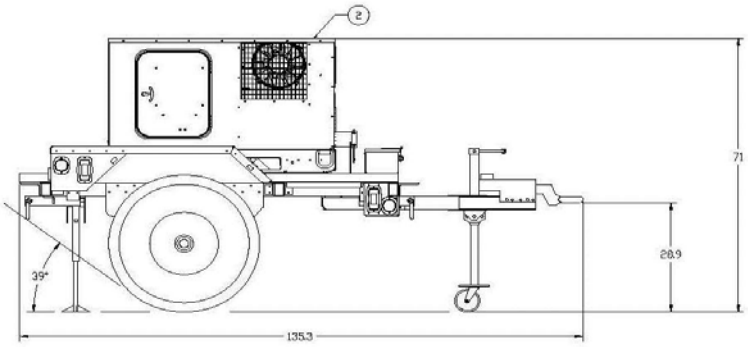

FIND NO.	COMPONENT	QTY	IDENTIFIER
1	Light Tactical Trailer (LTT)	1	97403-13230E6565
2	MEP-1041	1	6115-01-561-7466
3	Accessory box	1	97403-13229E7946
4	Fire extinguisher, 5 lb., A-A-1106	1	4210-00-270-4512

FIGURE A- 11 PU-2012 - AMMPS Power Unit, 10 kW, 400 Hz

Source: https://assist.dla.mil -- Downloaded: 2016-12-11T08:30Z
Check the source to verify that this is the current version before use.

Identification Data			
Model	**NSN**	**LIN**	**SSN**
PP-3102	6115-01-562-6480	Z01415	R62700
Physical Characteristic			
Dimension: LWH (in)	**Ship Cube (ft^3)**	**Wet Weight (lbs)**	**Ship Weight (lbs)**
170 x 96 x 73.75	697	4863	4781
Documentation			
Technical Manual	**Specification**	**Camouflage Drawing**	**Top Assembly**
TM 9-6115-756-13&P		30554-04-21307	TA-04-3102

NO PHOTO AVAILABLE

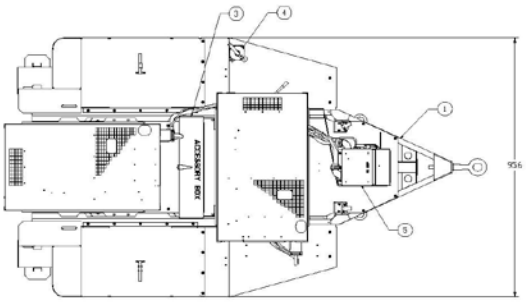

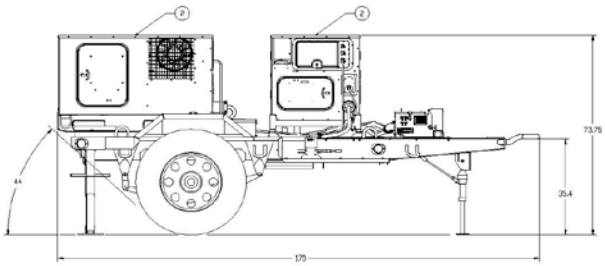

FIND NO.	COMPONENT	QTY	IDENTIFIER
1	2 1/2 Ton Modified Trailer, M200A1	1	30554-04-21234
2	MEP-1040	2	6115-01-561-7438
3	Accessory box	1	97403-13229E7946
4	Fire extinguisher, 5 lb., A-A-1106	1	4210-00-270-4512
5	Switch Box	1	30554-04-21329

FIGURE A- 12 PP-3102 - AMMPS Power Plant, 10 kW, 50/60 Hz

Source: https://assist.dla.mil -- Downloaded: 2016-12-11T08:30Z
Check the source to verify that this is the current version before use.

A.3.1.5 Advanced Medium Mobile Power Sources (AMMPS), DED 15 kW

TABLE A- VI Characteristic Data for MEP-1050 and MEP-1051

Identification Data						
Model	MEP-1050			MEP-1051		
Description	15 kW AMMPS, 60 Hz, DED, Skid Mtd			15 kW AMMPS, DED, 400Hz, Skid Mtd		
NSN	6115-01-561-7634			6115-01-561-7674		
LIN	Z01332			Z01333		
SSN	M53500			M53500		
Purchase Description	PD 6115-0125			PD 6115-0125		
Trailer Configuration	PU- 2003: FIGURE A- 14; PU-2101: FIGURE A-15; PP-3003: FIGURE A- 17			PU-2111: FIGURE A- 16		
Physical Characteristic						
Dimensions LWH (in)	65 x 36 x 53					
Ship Cube (ft^3)	71.8					
Wet Weight (lbs)	1610			1645		
Engine	Yanmar 4TNV84T-BMCU, 4 cylinder/4 stroke, 36.1hp @1800 RPM, 24VDC start, liquid-cooled.					
Instrumentation	Hour meter, voltmeter, frequency, amps (kilowatts), oil pressure, fuel, coolant temperature, battery amps, emergency stop, battle short.					
Fuels	Diesel DF-2D, DF-1D; Jet Fuel: JP-8, JP-5					
Fuel Tank Capacity (Gal)	8.6					
Performance Characteristic						
Power Rating	15kW, 0.8 pf @ 4000ft/120°F; Derate: 3.5%/1000 ft from 4000 to 10000 ft					
Environmental Capability	-25°F (-50°F with Winterization Kit) to 125°F (3% duration for every 18°F between 125°F and 135°F), humidity, sand/dust, rain, cold storage: -60°F, salt spray, solar radiation, wind, ice glaze/freezing rain/hoarfrost, 15° incline					
Protective Devices	Automatic shut down for overspeed. Automatic drop load for short circuit. Automatic shut down with emergency bypass for low oil pressure, high temperature, and low fuel level. Drop load with emergency bypass for under/over voltage, overload, and reverse power. Battery discharge warning.					
Fuel consumption	0.89 gal/hour @ rated load			1.01 gal/hour @ rated load		
Human Factors	MIL-STD-1474F					
Noise	70 dBA @ 7 meters (23 feet)					
Reliability (MTBEFF)	750 hours			750 hours		
Maintenance Ratio	0.025					
Electrical Characteristic						
Basic Design	Synchronous generator, drip-proof generator enclosure, brushless rotary exciter, solderless connectors, 60Hz: Cummins alternator, 4 pole; 400Hz: Cummins alternator, 24 pole. Convenience receptacle on set.					
EMI	Meets MIL-STD-461E for conducted emissions, conducted susceptibility, radiated emissions, and radiated susceptibility					
EMP	HAEMP IAW MIL-STD-2169					
Motor load	Shall start a NEMA Code F 15hp motor					
Voltage Connection (3 phase, 4 wire)	60 Hz: 120/208V	60 Hz: 240/416V	50 Hz: 120/208V	50 Hz: 240/416V	400 Hz: 120/208V	400 Hz: 240/416V
Voltage adj. Range	197-240V	395-480V	190-213V	380-426V	197-240V	395-480V
Freq. adj. Range	±3%					

Electrical Performance			
Electric Power Quality		**Frequency**	**AC Voltage**
Regulation		3%	3%
Voltage modulation			2.5%
Short term steady state stability (30 sec)		2% bandwidth	2% bandwidth
Long term steady state stability (4 hr)		3% bandwidth	4% bandwidth
Application of rated load	transient	4%	20 % dip
	recovery time	4 sec	3 sec
Rejection of rated load	transient	4%	30% rise
	recovery time	4 sec	3 sec
Max waveform deviation factor			5%
Individual waveform harmonic			2%

Source: https://assist.dla.mil -- Downloaded: 2016-12-11T08:30Z
Check the source to verify that this is the current version before use.

Optional Equipment			
Description	**NSN**	**Technical Bulletin**	**Effect on Dimensions (in)**
Winterization kit	6115-01-589-2624		None (internal)
Technical Manuals			
Army	**Air Force**	**Marine Corps**	**Navy**
TM 9-6115-751-10	TO 35C2-3-533-1	TM 11773A-O1	TM 7610-LL-L1A-0024
TM 9-6115-751-24&P	TO 35C2-3-533-2	TM 11773A-O1/1	TM 7610-LL-L1A-0025

MEP-1050 or MEP-1051

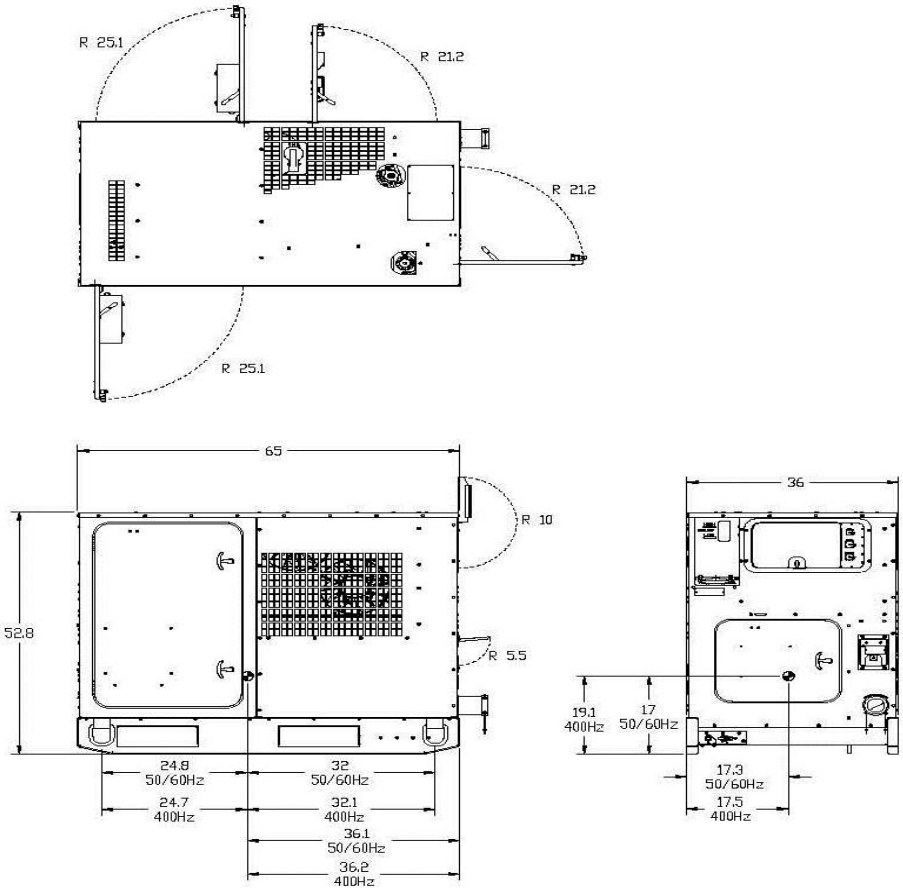

FIGURE A- 13 AMMPS Generator Set, 15 kW

Source: https://assist.dla.mil -- Downloaded: 2016-12-11T08:30Z
Check the source to verify that this is the current version before use.

Identification Data			
Model	**NSN**	**LIN**	**SSN**
PU-2003	6115-01-562-3721	Z01405	R62700
Physical Characteristic			
Dimension: LWH (in)	**Ship Cube (ft^3)**	**Wet Weight (lbs)**	**Ship Weight (lbs)**
135 x 86 x 88	591	3031	2970
Documentation			
Technical Manual	**Specification**	**Camouflage Drawing**	**Top Assembly**
TM 9-6115-757-13&P		30554-04-21183	TA-04-2003

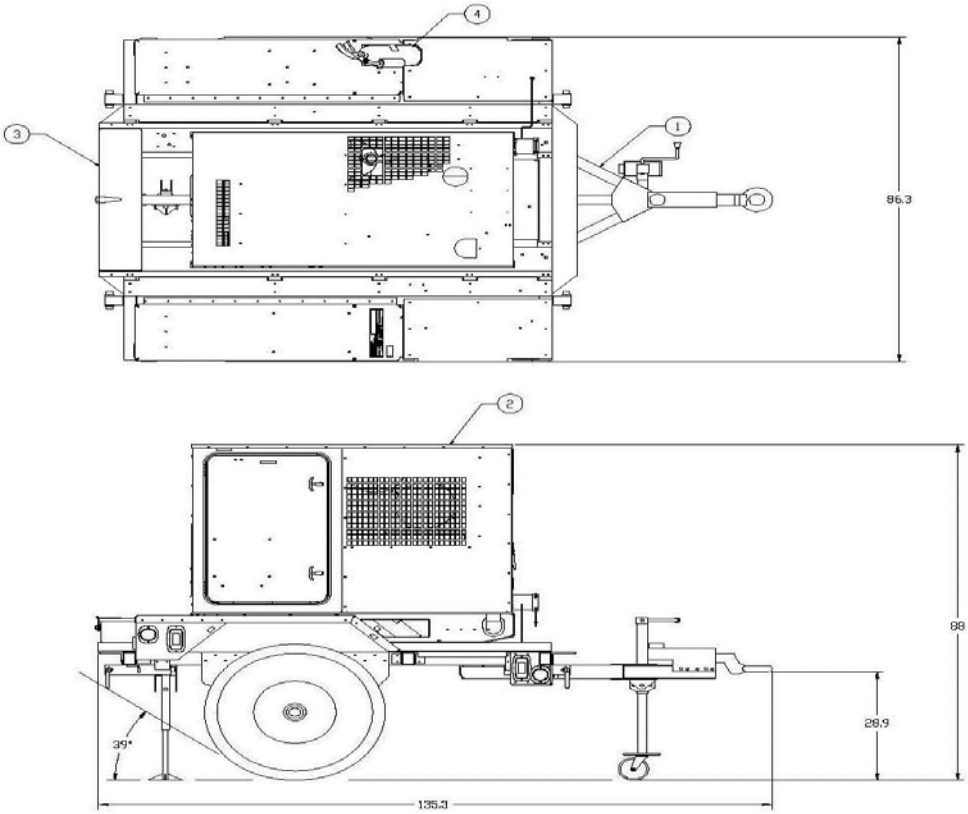

FIND NO.	COMPONENT	QTY	IDENTIFIER
1	Light Tactical Trailer (LTT)	1	97403-13230E6565
2	MEP-1050	1	6115-01-561-7634
3	Accessory box	1	97403-13229E7946
4	Fire extinguisher, 5 lb., A-A-1106	1	4210-00-270-4512

FIGURE A- 14 PU-2003 - AMMPS Power Unit, 15 kW, 50/60 Hz

Source: https://assist.dla.mil -- Downloaded: 2016-12-11T08:30Z
Check the source to verify that this is the current version before use.

Identification Data			
Model	**NSN**	**LIN**	**SSN**
PU-2101	6115-01-562-3689	Z01404	R62700
Physical Characteristic			
Dimension: LWH (in)	**Ship Cube (ft^3)**	**Wet Weight (lbs)**	**Ship Weight (lbs)**
165 x 96 x 89.5	821	4251	4190
Documentation			
Technical Manual	**Specification**	**Camouflage Drawing**	**Top Assembly**
TM 9-6115-757-13&P		30554-04-21516	TA-04-2101

FIGURE A- 15 PU-2101 - AMMPS Power Unit, 15 kW, 50/60 Hz

Source: https://assist.dla.mil -- Downloaded: 2016-12-11T08:30Z
Check the source to verify that this is the current version before use.

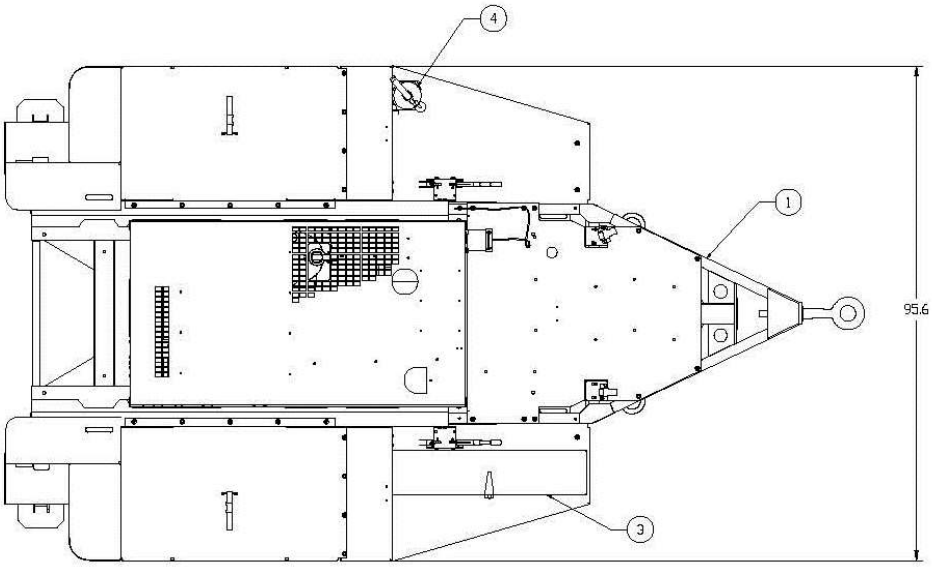

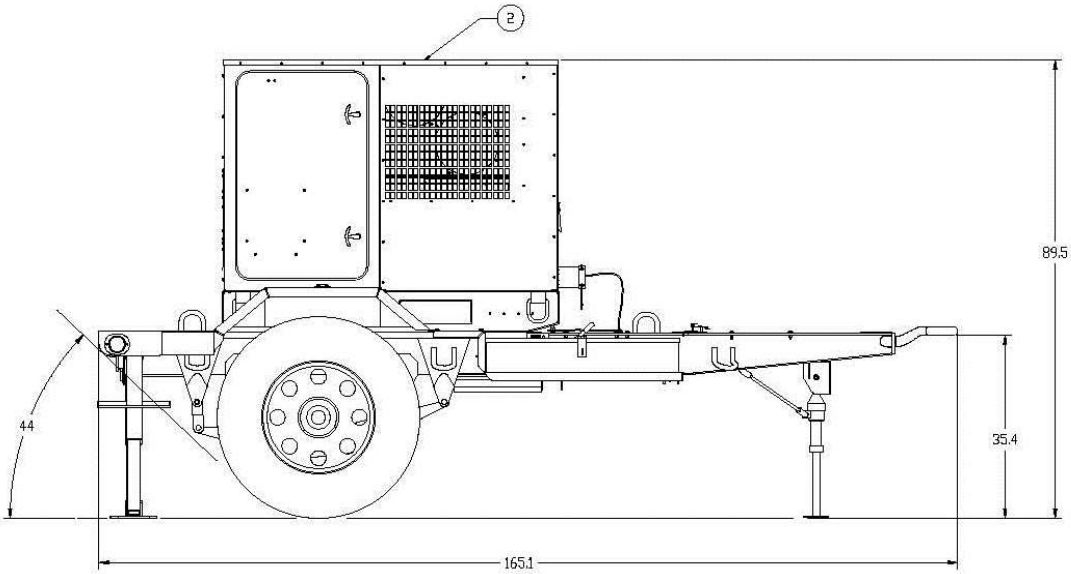

FIND NO.	COMPONENT	QTY	IDENTIFIER
1	2 1/2 Ton Modified Trailer, M200A1	1	30554-04-21234
2	MEP-1050	1	6115-01-561-7634
3	Accessory box	1	97403-13229E7946
4	Fire extinguisher, 5 lb., A-A-1106	1	4210-00-270-4512

FIGURE A- 15 PU-2101 - AMMPS Power Unit, 15 kW, 50/60 Hz (continued)

Source: https://assist.dla.mil -- Downloaded: 2016-12-11T08:30Z
Check the source to verify that this is the current version before use.

Identification Data			
Model	**NSN**	**LIN**	**SSN**
PU-2111	6115-01-562-3659	Z01399	R62700
Physical Characteristic			
Dimension: LWH (in)	**Ship Cube (ft^3)**	**Wet Weight (lbs)**	**Ship Weight (lbs)**
165 x 96 x 89.5	821	4271	4210
Documentation			
Technical Manual	**Specification**	**Camouflage Drawing**	**Top Assembly**
TM 9-6115-757-13&P		30554-04-21516	TA-04-2111

FIGURE A- 16 PU-2111 - AMMPS Power Unit, 15 kW, 400 Hz

Source: https://assist.dla.mil -- Downloaded: 2016-12-11T08:30Z
Check the source to verify that this is the current version before use.

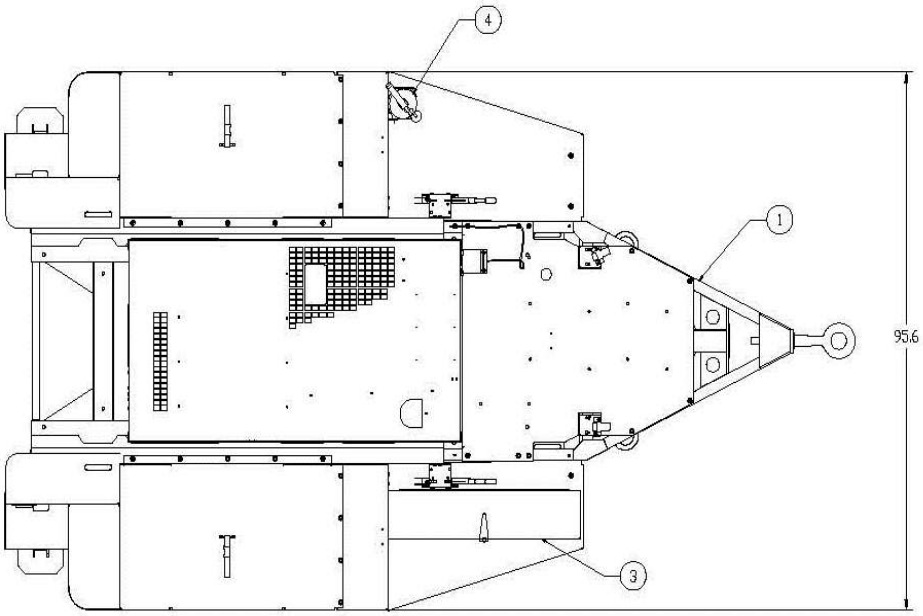

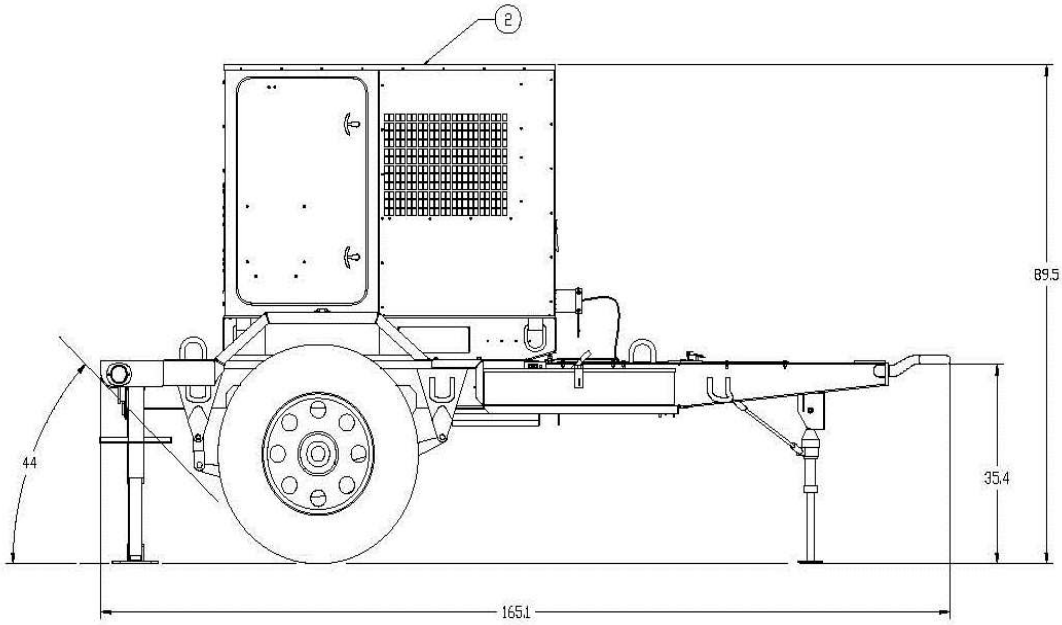

FIND NO.	COMPONENT	QTY	IDENTIFIER
1	2 1/2 Ton Modified Trailer, M200A1	1	30554-04-21234
2	MEP-1051	1	6115-01-561-7674
3	Accessory box	1	97403-13229E7946
4	Fire extinguisher, 5 lb., A-A-1106	1	4210-00-270-4512

FIGURE A- 16 PU-2111 - AMMPS Power Unit, 15 kW, 400 Hz (continued)

Source: https://assist.dla.mil -- Downloaded: 2016-12-11T08:30Z
Check the source to verify that this is the current version before use.

Identification Data			
Model	**NSN**	**LIN**	**SSN**
PP-3003	6115-01-562-3995	Z01437	R62700
Physical Characteristic			
Dimension: LWH (in)	**Ship Cube (ft^3)**	**Wet Weight (lbs)**	**Ship Weight (lbs)**
135 x 86 x 88 each	477 each	Unit A: 3099 Unit B: 3094	Unit A: 3040 Unit B: 3035
Documentation			
Technical Manual	**Specification**	**Camouflage Drawing**	**Top Assembly**
TM 9-6115-757-13&P		30554-04-21188	TA-04-3003

FIGURE A- 17 PP-3003 - AMMPS Power Plant, 15 kW, 50/60 Hz

Source: https://assist.dla.mil -- Downloaded: 2016-12-11T08:30Z
Check the source to verify that this is the current version before use.

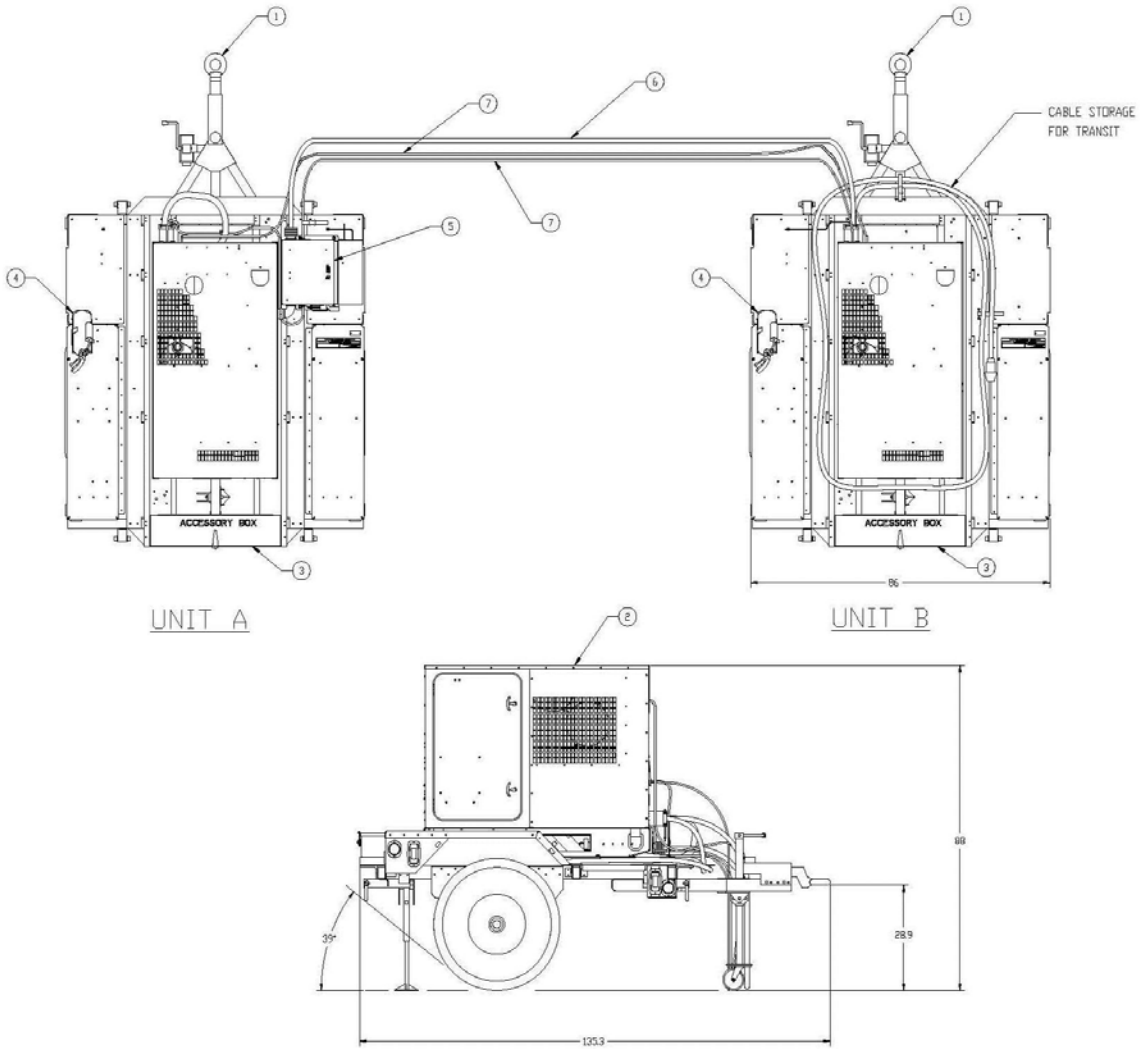

FIND NO.	COMPONENT	QTY	IDENTIFIER
1	Light Tactical Trailer (LTT)	2	97403-13230E6565
2	MEP-1050	2	6115-01-561-7634
3	Accessory box	2	97403-13229E7946
4	Fire extinguisher, 5 lb., A-A-1106	2	4210-00-270-4512
5	Switch Box (Unit A)	1	30554-04-21390
6	Cable Assembly (Unit B)	1	97403-13229E5738
7	Paralleling Cable Assembly	2	30554-04-21228

FIGURE A- 17 PP-3003 - AMMPS Power Plant, 15 kW, 50/60 Hz (Continued)

Source: https://assist.dla.mil -- Downloaded: 2016-12-11T08:30Z
Check the source to verify that this is the current version before use.

A.3.1.6 Advanced Medium Mobile Power Sources (AMMPS), DED 30 kW

TABLE A- VII Characteristic Data for MEP-1060 and MEP-1061

Identification Data						
Model	MEP-1060			MEP-1061		
Description	30 kW AMMPS, 60 Hz, DED, Skid Mtd			30 kW AMMPS, DED, 400Hz, Skid Mtd		
NSN	6115-01-561-7718			6115-01-561-7738		
LIN	Z01334			Z01335		
SSN	M53500			M53500		
Purchase Description	PD 6115-0125			PD 6115-0125		
Trailer Configuration	PU- 2102: FIGURE A- 19; PP-3105: FIGURE A- 21			PU-2112: FIGURE A- 20		
Physical Characteristic						
Dimensions LWH (in)	75 x 36 x 53					
Ship Cube (ft^3)	82.8					
Wet Weight (lbs)	2330			2455		
Engine	Cummins QSB3.3 Tier III, 4 cylinder/4 stroke, 98hp @1800 RPM, 24VDC start, liquid-cooled.					
Instrumentation	Hour meter, voltmeter, frequency, amps (kilowatts), oil pressure, fuel, coolant temperature, battery amps, emergency stop, battle short.					
Fuels	Diesel DF-2D, DF-1D; Jet Fuel: JP-8, JP-5					
Fuel Tank Capacity (Gal)	16.7					
Performance Characteristic						
Power Rating	30kW, 0.8 pf @ 4000ft/120°F; Derate: 3.5%/1000 ft from 4000 to 10000 ft					
Environmental Capability	-25°F (-50°F with Winterization Kit) to 125°F (3% duration for every 18°F between 125°F and 135°F), humidity, sand/dust, rain, cold storage: -60°F, salt spray, solar radiation, wind, ice glaze/freezing rain/hoarfrost, 15° incline					
Protective Devices	Automatic shut down for overspeed. Automatic drop load for short circuit. Automatic shut down with emergency bypass for low oil pressure, high temperature, and low fuel level. Drop load with emergency bypass for under/over voltage, overload, and reverse power. Battery discharge warning.					
Fuel consumption	1.8 gal/hour @ rated load			2.07 gal/hour @ rated load		
Human Factors	MIL-STD-1474F					
Noise	70 dBA @ 7 meters (23 feet)					
Reliability (MTBEFF)	750 hours			750 hours		
Maintenance Ratio	0.025					
Electrical Characteristic						
Basic Design	Synchronous generator, drip-proof generator enclosure, brushless rotary exciter, solderless connectors, 60Hz: Cummins alternator, 4 pole; 400Hz: Cummins alternator, 24 pole. Convenience receptacle on set.					
EMI	Meets MIL-STD-461E for conducted emissions, conducted susceptibility, radiated emissions, and radiated susceptibility					
EMP	HAEMP IAW MIL-STD-2169					
Motor load	Shall start a NEMA Code F 30hp motor					
Voltage Connection (3 phase, 4 wire)	60 Hz: 120/208V	60 Hz: 240/416V	50 Hz: 120/208V	50 Hz: 240/416V	400 Hz: 120/208V	400 Hz: 240/416V
Voltage adj. Range	197-240V	395-480V	190-213V	380-426V	197-240V	395-480V
Freq. adj. Range	±3%					

Electrical Performance			
Electric Power Quality		**Frequency**	**AC Voltage**
Regulation		3%	3%
Voltage modulation			2.5%
Short term steady state stability (30 sec)		2% bandwidth	2% bandwidth
Long term steady state stability (4 hr)		3% bandwidth	4% bandwidth
Application of rated load	transient	4%	20 % dip
	recovery time	4 sec	3 sec
Rejection of rated load	transient	4%	30% rise
	recovery time	4 sec	3 sec
Max waveform deviation factor			5%
Individual waveform harmonic			2%

Source: https://assist.dla.mil -- Downloaded: 2016-12-11T08:30Z
Check the source to verify that this is the current version before use.

Optional Equipment			
Description	**NSN**	**Technical Bulletin**	**Effect on Dimensions (in)**
Winterization kit	6115-01-589-2624		None (internal)
Technical Manuals			
Army	**Air Force**	**Marine Corps**	**Navy**
TM 9-6115-752-10	TO 35C2-3-534-1	TM 09246C/11776A-O1	TM 7610-LL-L1A-0027
TM 9-6115-752-24&P	TO 35C2-3-534-2	TM 09246C/11776A -O1/1	TM 7610-LL-L1A-0028

MEP-1060 or MEP-1061

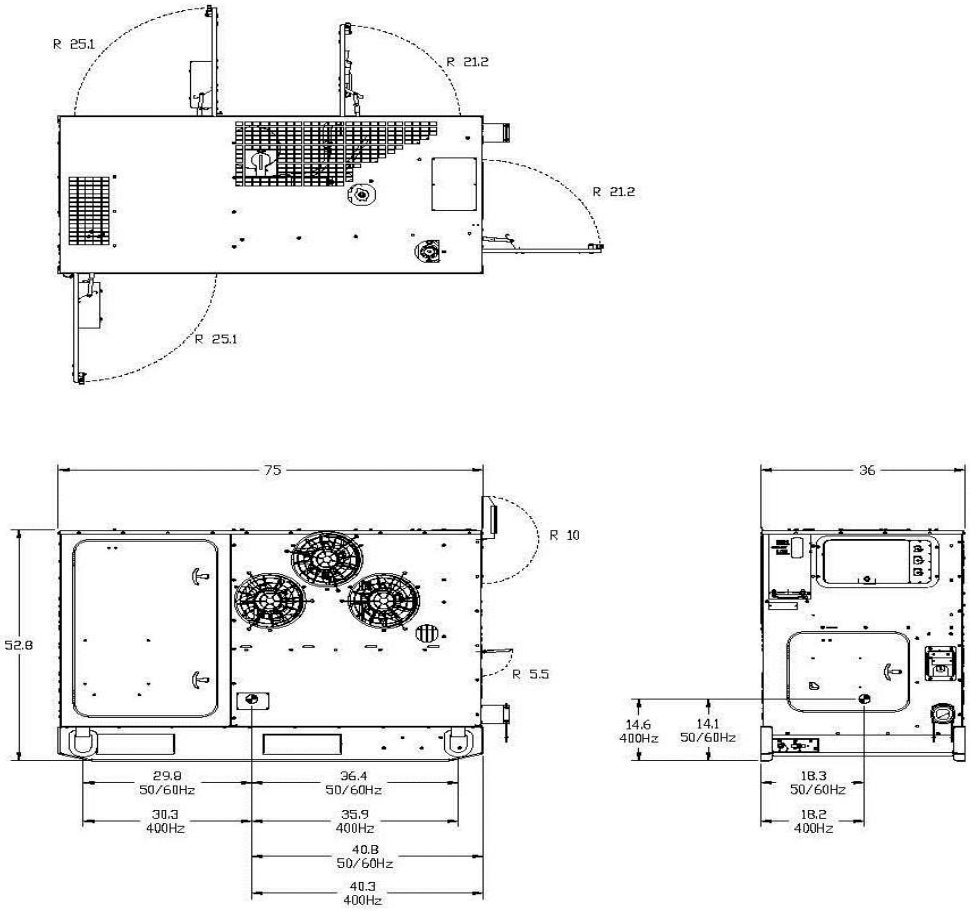

FIGURE A- 18 AMMPS Generator Set, 30 kW

Source: https://assist.dla.mil -- Downloaded: 2016-12-11T08:30Z
Check the source to verify that this is the current version before use.

Identification Data			
Model	**NSN**	**LIN**	**SSN**
PU-2102	6115-01-562-4106	Z01395	R62700
Physical Characteristic			
Dimension: LWH (in)	**Ship Cube (ft^3)**	**Wet Weight (lbs)**	**Ship Weight (lbs)**
165 x 96 x 89.5	821	4941	4830
Documentation			
Technical Manual	**Specification**	**Camouflage Drawing**	**Top Assembly**
TM 9-6115-758-13&P		30554-04-21517	TA-04-2102

FIGURE A- 19 PU-2102 - AMMPS Power Unit, 30 kW, 50/60 Hz

Source: https://assist.dla.mil -- Downloaded: 2016-12-11T08:30Z
Check the source to verify that this is the current version before use.

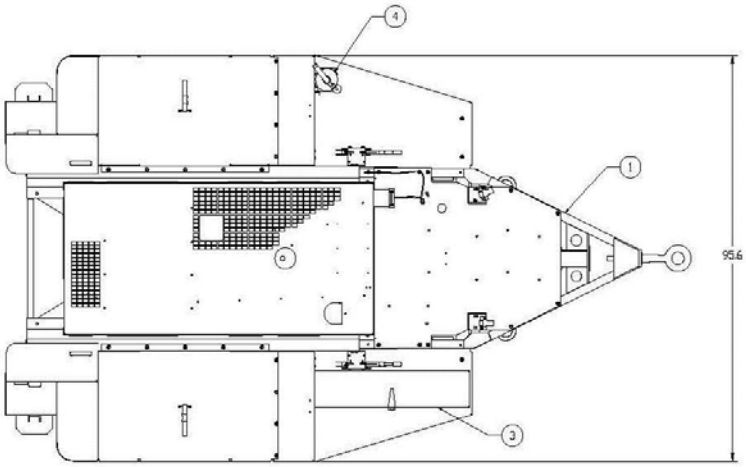

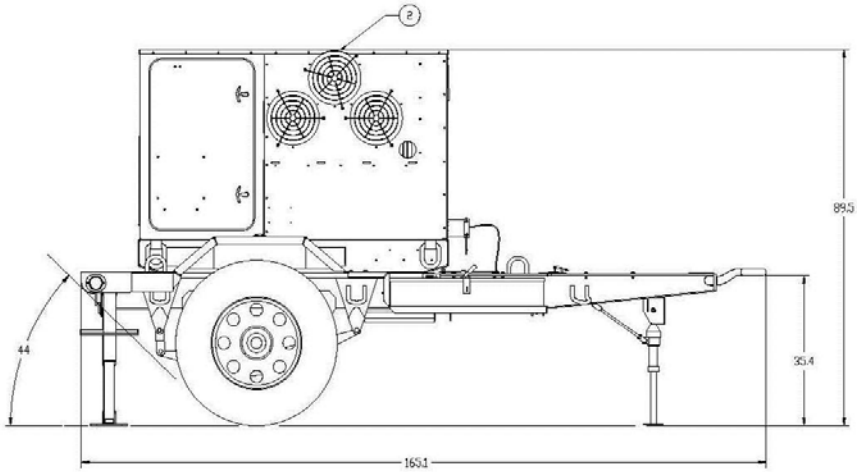

FIND NO.	COMPONENT	QTY	IDENTIFIER
1	2 1/2 Ton Modified Trailer, M200A1	1	30554-04-21234
2	MEP-1060	1	6115-01-561-7718
3	Accessory box	1	97403-13229E7946
4	Fire extinguisher, 5 lb., A-A-1106	1	4210-00-270-4512

FIGURE A- 19 PU-2102 - AMMPS Power Unit, 30 kW, 50/60 Hz (continued)

Source: https://assist.dla.mil -- Downloaded: 2016-12-11T08:30Z
Check the source to verify that this is the current version before use.

Identification Data			
Model	**NSN**	**LIN**	**SSN**
PU-2112	6115-01-562-4421	Z01389	R62700
Physical Characteristic			
Dimension: LWH (in)	**Ship Cube (ft^3)**	**Wet Weight (lbs)**	**Ship Weight (lbs)**
165 x 96 x 89.5	821	5071	4960
Documentation			
Technical Manual	**Specification**	**Camouflage Drawing**	**Top Assembly**
TM 9-6115-758-13&P		30554-04-21517	TA-04-2112

FIGURE A- 20 PU-2112 - AMMPS Power Unit, 30 kW, 400 Hz

Source: https://assist.dla.mil -- Downloaded: 2016-12-11T08:30Z
Check the source to verify that this is the current version before use.

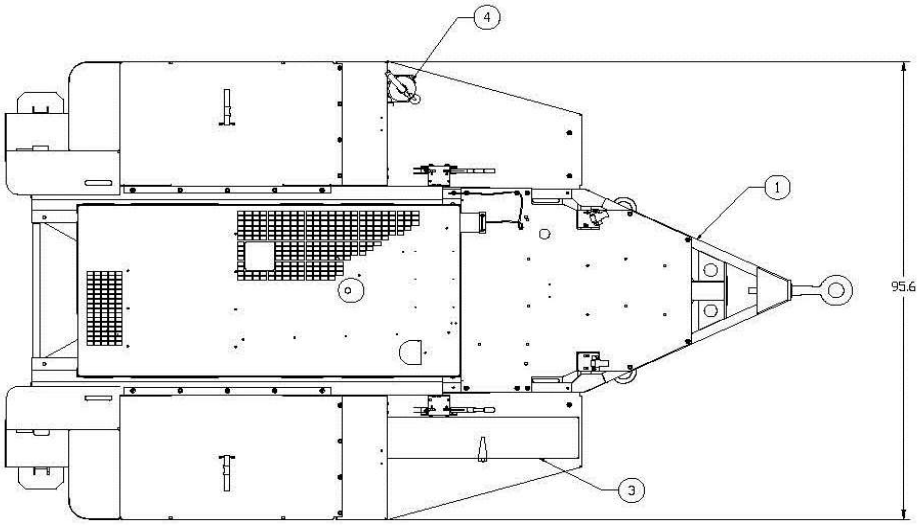

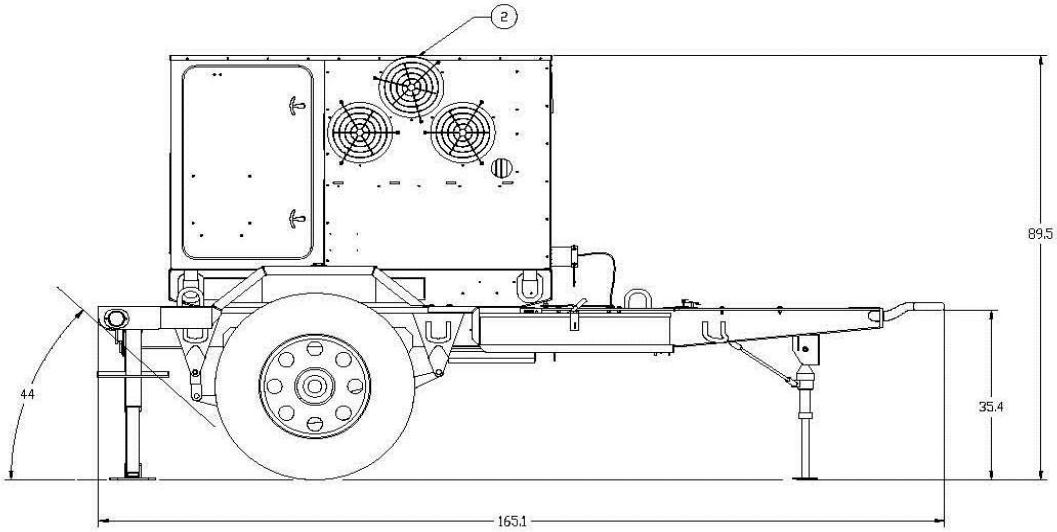

FIND NO.	COMPONENT	QTY	IDENTIFIER
1	2 1/2 Ton Modified Trailer, M200A1	1	30554-04-21234
2	MEP-1061	1	6115-01-561-7738
3	Accessory box	1	97403-13229E7946
4	Fire extinguisher, 5 lb., A-A-1106	1	4210-00-270-4512

FIGURE A- 20 PU-2112 - AMMPS Power Unit, 30 kW, 400 Hz (continued)

Source: https://assist.dla.mil -- Downloaded: 2016-12-11T08:30Z
Check the source to verify that this is the current version before use.

Identification Data			
Model	**NSN**	**LIN**	**SSN**
PP-3105	6115-01-562-4009	Z01398	R62700
Physical Characteristic			
Dimension: LWH (in)	**Ship Cube (ft^3)**	**Wet Weight (lbs)**	**Ship Weight (lbs)**
165 x 96 x 89.5 each	821 each	Unit A: 5009 Unit B: 5006	Unit A: 4895 Unit B: 4892
Documentation			
Technical Manual	**Specification**	**Camouflage Drawing**	**Top Assembly**
TM 9-6115-758-13&P		30554-04-21309	TA-04-3105

FIGURE A- 21 PP-3105 - AMMPS Power Plant, 30 kW, 50/60 Hz

Source: https://assist.dla.mil -- Downloaded: 2016-12-11T08:30Z
Check the source to verify that this is the current version before use.

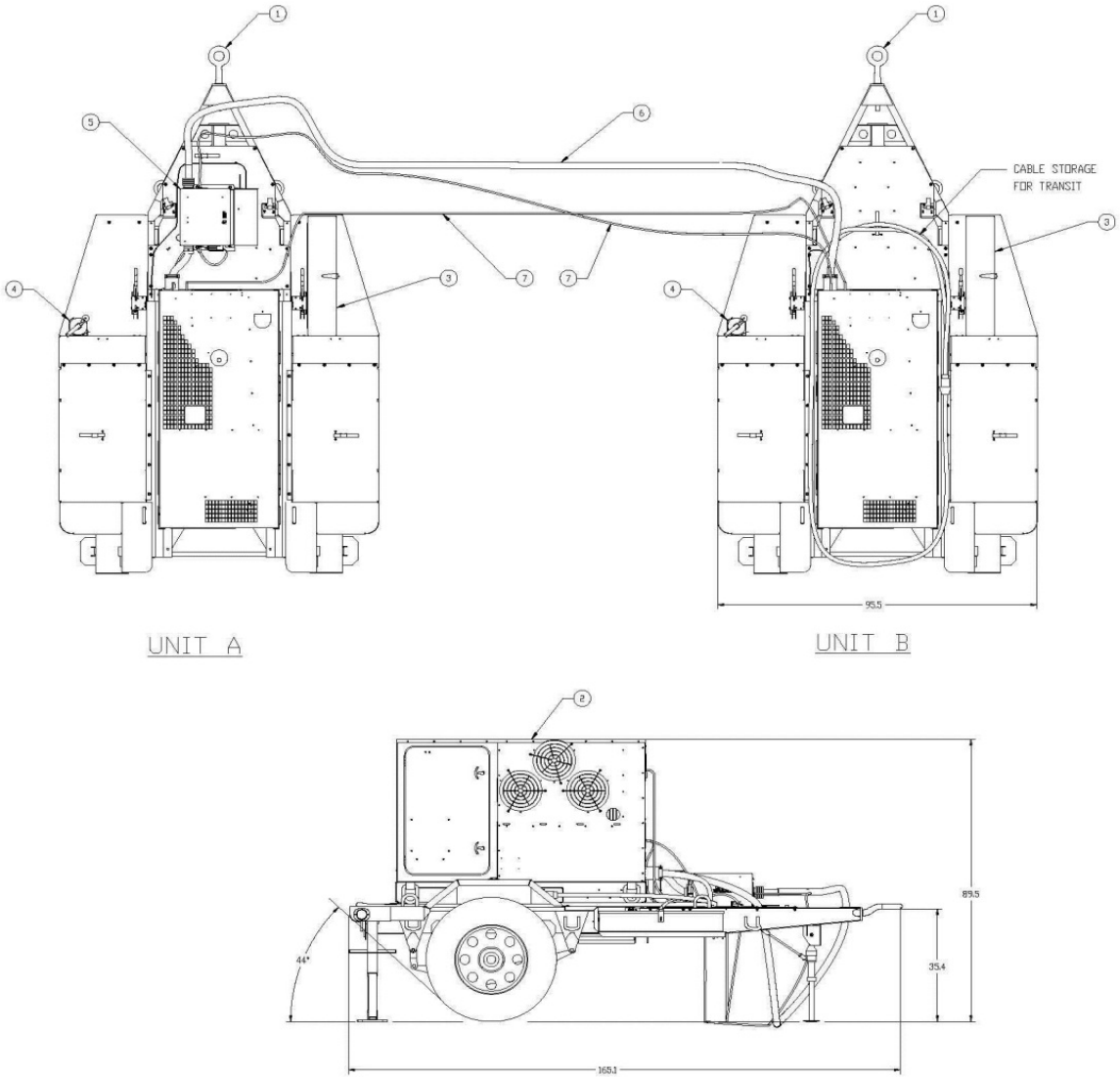

FIND NO.	COMPONENT	QTY	IDENTIFIER
1	2 1/2 Ton Modified Trailer, M200A1	2	30554-04-21234
2	MEP-1060	2	6115-01-561-7718
3	Accessory box	2	97403-13229E7946
4	Fire extinguisher, 5 lb., A-A-1106	2	4210-00-270-4512
5	Switch Box (Unit A)	1	30554-04-20839-1
6	Cable Assembly (Unit B)	1	97403-13229E5738
7	Paralleling Cable Assembly	2	30554-04-21228

FIGURE A- 21 PP-3105 - AMMPS Power Plant, 30 kW, 50/60 Hz (continued)

Source: https://assist.dla.mil -- Downloaded: 2016-12-11T08:30Z
Check the source to verify that this is the current version before use.

A.3.1.7 Advanced Medium Mobile Power Sources (AMMPS), DED 60 kW

TABLE A- VIII Characteristic Data for MEP-1070 and MEP-1071

Identification Data						
Model	MEP-1070			MEP-1071		
Description	60 kW AMMPS, 60 Hz, DED, Skid Mtd			60 kW AMMPS, DED, 400Hz, Skid Mtd		
NSN	6115-01-561-7788			6115-01-561-7895		
LIN	Z01336			Z01339		
SSN	M53500			M53500		
Purchase Description	PD 6115-0125			PD 6115-0125		
Trailer Configuration	PU- 2103: FIGURE A- 23; PP-3106: FIGURE A- 25; PP-3206: FIGURE A- 26			PU-2113: FIGURE A- 24; PP-3216: FIGURE A- 27		
Physical Characteristic						
Dimensions LWH (in)	82 x 36 x 53					
Ship Cube (ft^3)	90.5					
Wet Weight (lbs)	3205			3560		
Engine	Cummins QSB4.3 Tier III, 4 cylinder/4 stroke, 127hp @1800 RPM, 24VDC start, liquid-cooled.					
Instrumentation	Hour meter, voltmeter, frequency, amps (kilowatts), oil pressure, fuel, coolant temperature, battery amps, emergency stop, battle short.					
Fuels	Diesel DF-2D, DF-1D; Jet Fuel: JP-8, JP-5					
Fuel Tank Capacity (Gal)	34.7					
Performance Characteristic						
Power Rating	60kW, 0.8 pf @ 4000ft/120°F; Derate: 3.5%/1000 ft from 4000 to 10000 ft					
Environmental Capability	-25°F (-50°F with Winterization Kit) to 125°F (3% duration for every 18°F between 125°F and 135°F), humidity, sand/dust, rain, cold storage: -60°F, salt spray, solar radiation, wind, ice glaze/freezing rain/hoarfrost, 15° incline					
Protective Devices	Automatic shut down for overspeed. Automatic drop load for short circuit. Automatic shut down with emergency bypass for low oil pressure, high temperature, and low fuel level. Drop load with emergency bypass for under/over voltage, overload, and reverse power. Battery discharge warning.					
Fuel consumption	3.5 gal/hour @ rated load			3.99 gal/hour @ rated load		
Human Factors	MIL-STD-1474F					
Noise	72 dBA @ 7 meters (23 feet)					
Reliability (MTBEFF)	750 hours			750 hours		
Maintenance Ratio	0.025					
Electrical Characteristic						
Basic Design	Synchronous generator, drip-proof generator enclosure, brushless rotary exciter, solderless connectors, 60Hz: Cummins alternator, 4 pole; 400Hz: Cummins alternator, 24 pole. Convenience receptacle on set.					
EMI	Meets MIL-STD-461E for conducted emissions, conducted susceptibility, radiated emissions, and radiated susceptibility					
EMP	HAEMP IAW MIL-STD-2169					
Motor load	Shall start a NEMA Code F 30hp motor					
Voltage Connection (3 phase, 4 wire)	60 Hz: 120/208V	60 Hz: 240/416V	50 Hz: 120/208V	50 Hz: 240/416V	400 Hz: 120/208V	400 Hz: 240/416V
Voltage adj. Range	197-240V	395-480V	190-213V	380-426V	197-240V	395-480V
Freq. adj. Range	±3%					

Electrical Performance			
Electric Power Quality		**Frequency**	**AC Voltage**
Regulation		3%	3%
Voltage modulation			2.5%
Short term steady state stability (30 sec)		2% bandwidth	2% bandwidth
Long term steady state stability (4 hr)		3% bandwidth	4% bandwidth
Application of rated load	transient	4%	20 % dip
	recovery time	4 sec	3 sec
Rejection of rated load	transient	4%	30% rise
	recovery time	4 sec	3 sec
Max waveform deviation factor			5%
Individual waveform harmonic			2%

Source: https://assist.dla.mil -- Downloaded: 2016-12-11T08:30Z
Check the source to verify that this is the current version before use.

Optional Equipment			
Description	**NSN**	**Technical Bulletin**	**Effect on Dimensions (in)**
Winterization kit	6115-01-589-2624		None (internal)
Technical Manuals			
Army	**Air Force**	**Marine Corps**	**Navy**
TM 9-6115-753-10	TO 35C2-3-535-1	TM 09244C/09245A-O1	TM 7610-LL-L1A-0030
TM 9-6115-753-24&P	TO 35C2-3-535-2	TM 09244C/09245A -O1/1	TM 7610-LL-L1A-0031

MEP-1070 or MEP-1071

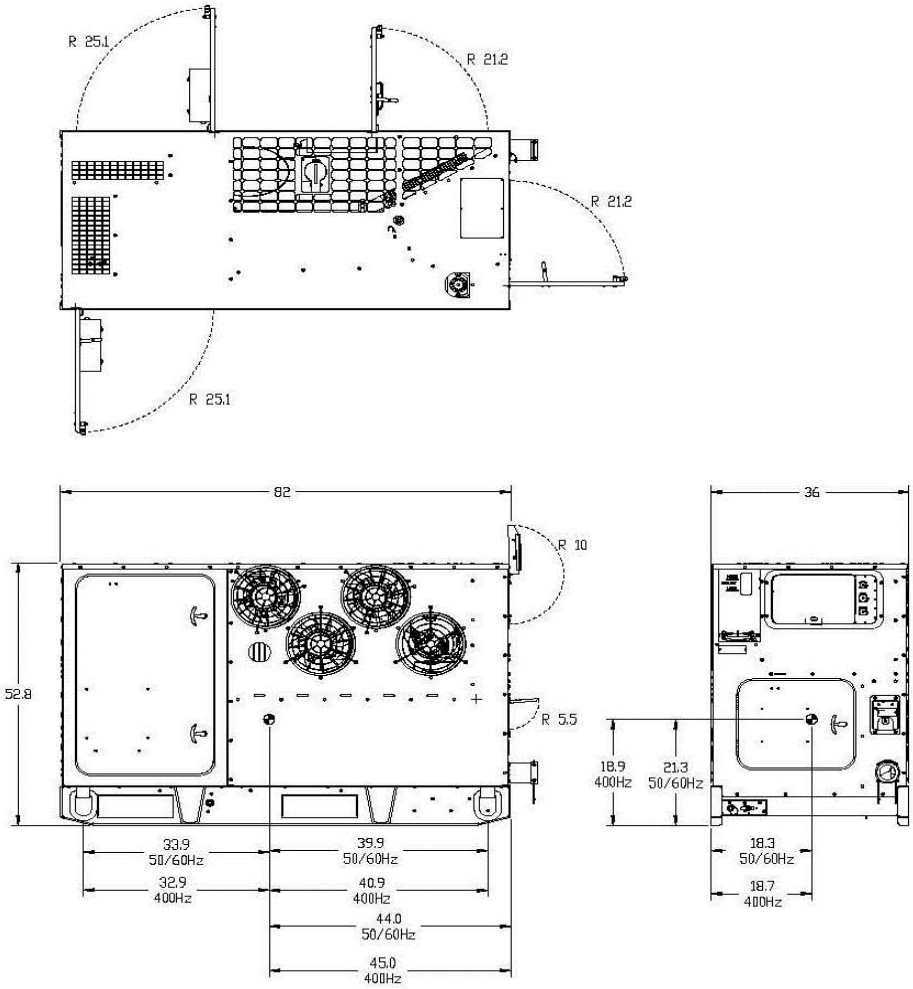

FIGURE A- 22 AMMPS Generator Set, 60 kW

Source: https://assist.dla.mil -- Downloaded: 2016-12-11T08:30Z
Check the source to verify that this is the current version before use.

Identification Data			
Model	**NSN**	**LIN**	**SSN**
PU-2103	6115-01-562-4600	Z01385	R62700
Physical Characteristic			
Dimension: LWH (in)	**Ship Cube (ft^3)**	**Wet Weight (lbs)**	**Ship Weight (lbs)**
165 x 96 x 89.5	821	5751	5520
Documentation			
Technical Manual	**Specification**	**Camouflage Drawing**	**Top Assembly**
TM 9-6115-759-13&P		30554-04-21518	TA-04-2103

NO PHOTO AVAILABLE

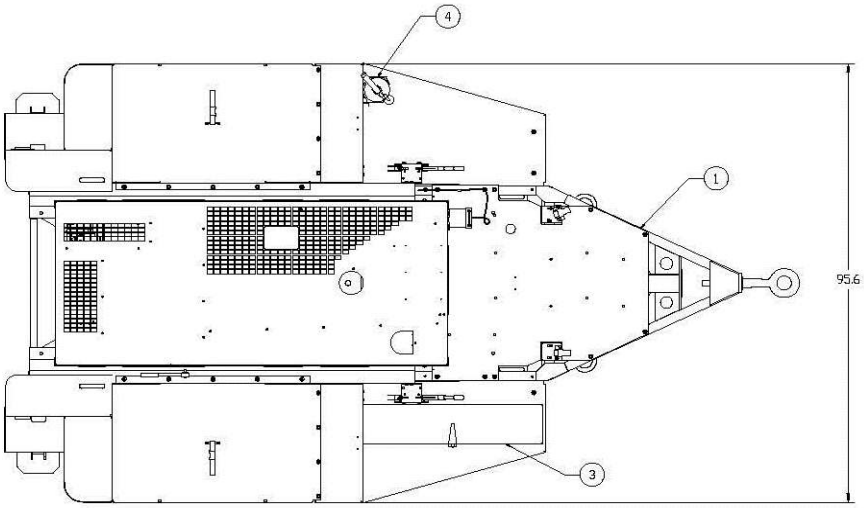

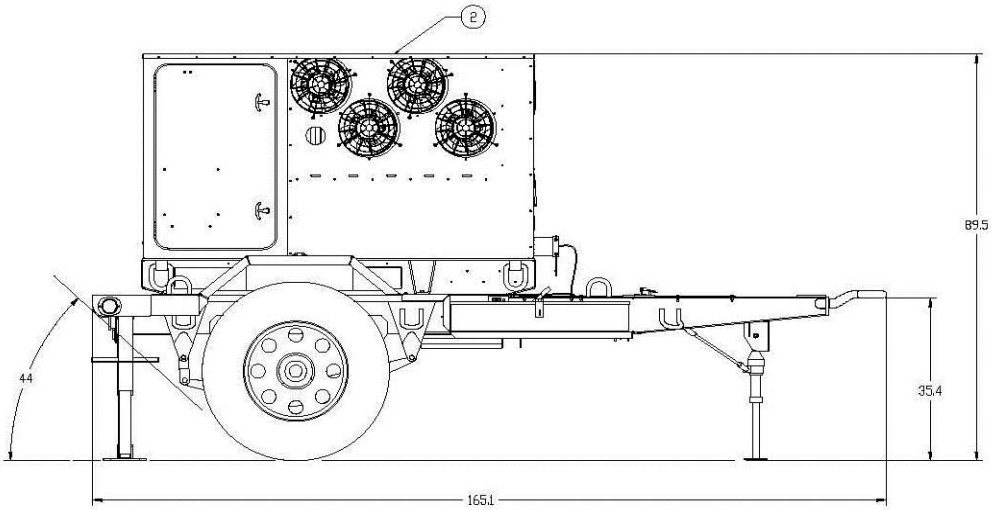

FIND NO.	COMPONENT	QTY	IDENTIFIER
1	2 1/2 Ton Modified Trailer, M200A1	1	30554-04-21234
2	MEP-1070	1	6115-01-561-7788
3	Accessory box	1	97403-13229E7946
4	Fire extinguisher, 5 lb., A-A-1106	1	4210-00-270-4512

FIGURE A- 23 PU-2103 - AMMPS Power Unit, 60 kW, 50/60 Hz

Source: https://assist.dla.mil -- Downloaded: 2016-12-11T08:30Z
Check the source to verify that this is the current version before use.

APPENDIX A

Identification Data			
Model	**NSN**	**LIN**	**SSN**
PU-2113	6115-01-562-4616	Z01381	R62700
Physical Characteristic			
Dimension: LWH (in)	**Ship Cube (ft^3)**	**Wet Weight (lbs)**	**Ship Weight (lbs)**
165 x 96 x 89.5	821	5971	5740
Documentation			
Technical Manual	**Specification**	**Camouflage Drawing**	**Top Assembly**
TM 9-6115-759-13&P		30554-04-21518	TA-04-2113

NO PHOTO AVAILABLE

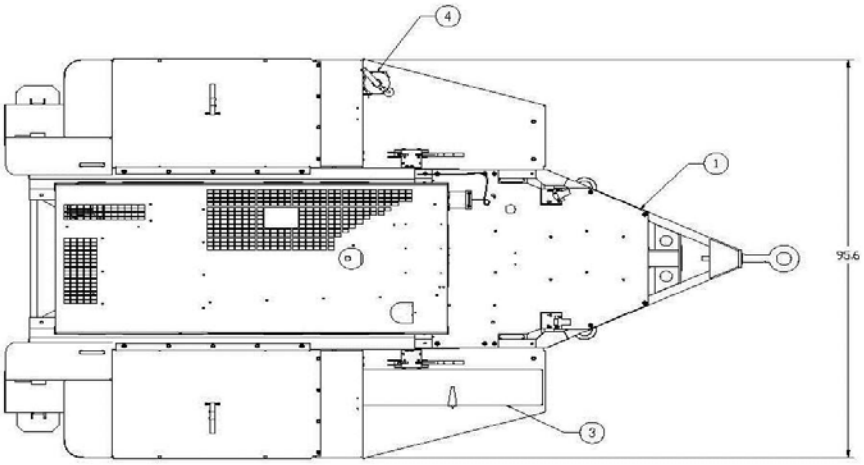

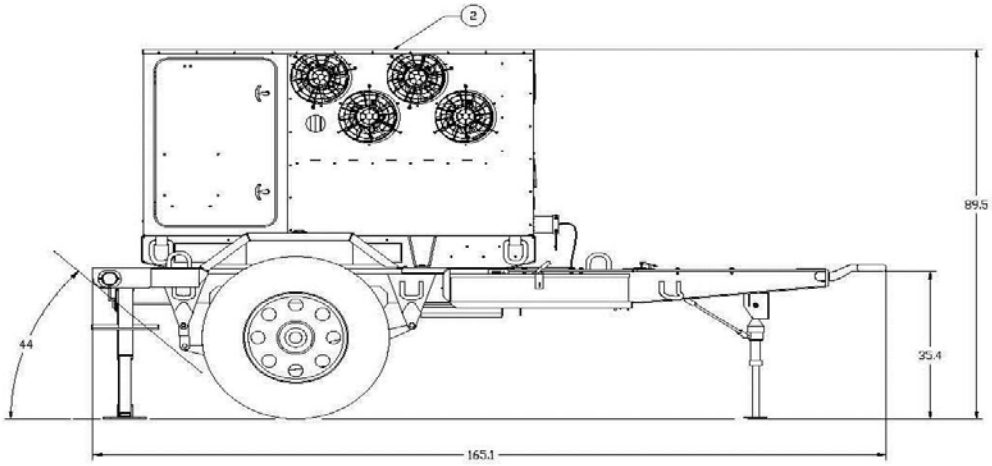

FIND NO.	COMPONENT	QTY	IDENTIFIER
1	2 1/2 Ton Modified Trailer, M200A1	1	30554-04-21234
2	MEP-1071	1	6115-01-561-7895
3	Accessory box	1	97403-13229E7946
4	Fire extinguisher, 5 lb., A-A-1106	1	4210-00-270-4512

FIGURE A- 24 PU-2113 - AMMPS Power Unit, 60 kW, 400 Hz

Source: https://assist.dla.mil -- Downloaded: 2016-12-11T08:30Z
Check the source to verify that this is the current version before use.

Identification Data			
Model	**NSN**	**LIN**	**SSN**
PP-3106	6115-01-562-4066	Z01388	R62700
Physical Characteristic			
Dimension: LWH (in)	**Ship Cube (ft^3)**	**Wet Weight (lbs)**	**Ship Weight (lbs)**
165 x 96 x 89.5 each	821 each	Unit A: 5819 Unit B: 5886	Unit A: 5583 Unit B: 5650
Documentation			
Technical Manual	**Specification**	**Camouflage Drawing**	**Top Assembly**
TM 9-6115-759-13&P		30554-04-21310	TA-04-3106

FIGURE A- 25 PP-3106 - AMMPS Power Plant, 60 kW, 50/60 Hz

Source: https://assist.dla.mil -- Downloaded: 2016-12-11T08:30Z
Check the source to verify that this is the current version before use.

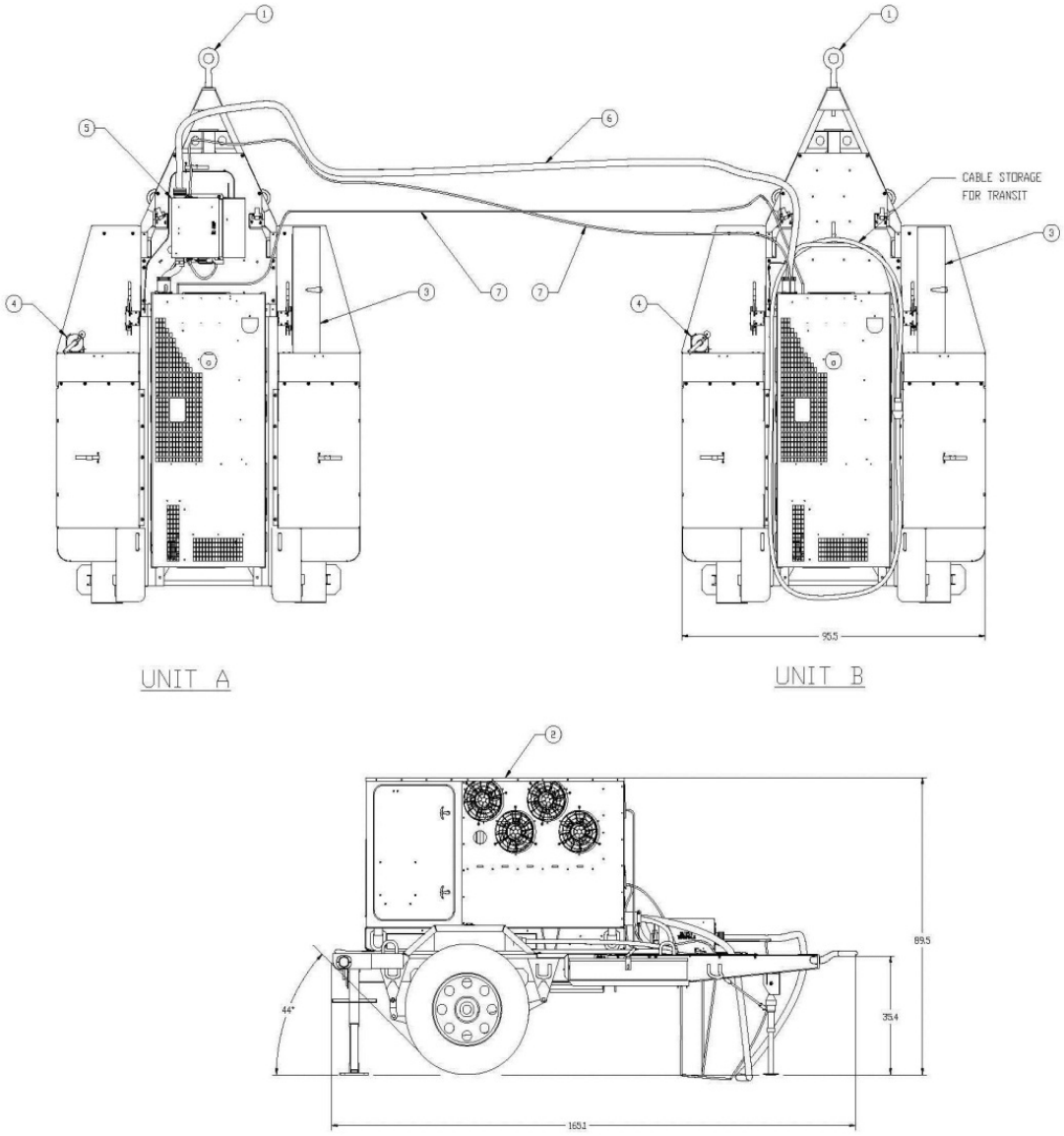

FIND NO.	COMPONENT	QTY	IDENTIFIER
1	2 1/2 Ton Modified Trailer, M200A1	2	30554-04-21234
2	MEP-1070	2	6115-01-561-7788
3	Accessory box	2	97403-13229E7946
4	Fire extinguisher, 5 lb., A-A-1106	2	4210-00-270-4512
5	Switch Box (Unit A)	1	30554-04-20840-1
6	Cable Assembly (Unit B)	1	97403-13229E5741
7	Paralleling Cable Assembly	2	30554-04-21228

FIGURE A- 25 PP-3106 - AMMPS Power Plant, 60 kW, 50/60 Hz (continued)

Source: https://assist.dla.mil -- Downloaded: 2016-12-11T08:30Z
Check the source to verify that this is the current version before use.

Identification Data			
Model	**NSN**	**LIN**	**SSN**
PP-3206	6115-01-613-9295		R62700
Physical Characteristic			
Dimension: LWH (in)	**Ship Cube (ft^3)**	**Wet Weight (lbs)**	**Ship Weight (lbs)**
223 x 96 x 90	1115	14700	13600
Documentation			
Technical Manual	**Specification**	**Camouflage Drawing**	**Top Assembly**
TM 9-6115-666-13&P			TA-04-3206

FIGURE A- 26 PP-3206 - AMMPS Power Plant, 60 kW, 50/60 Hz

Source: https://assist.dla.mil -- Downloaded: 2016-12-11T08:30Z
Check the source to verify that this is the current version before use.

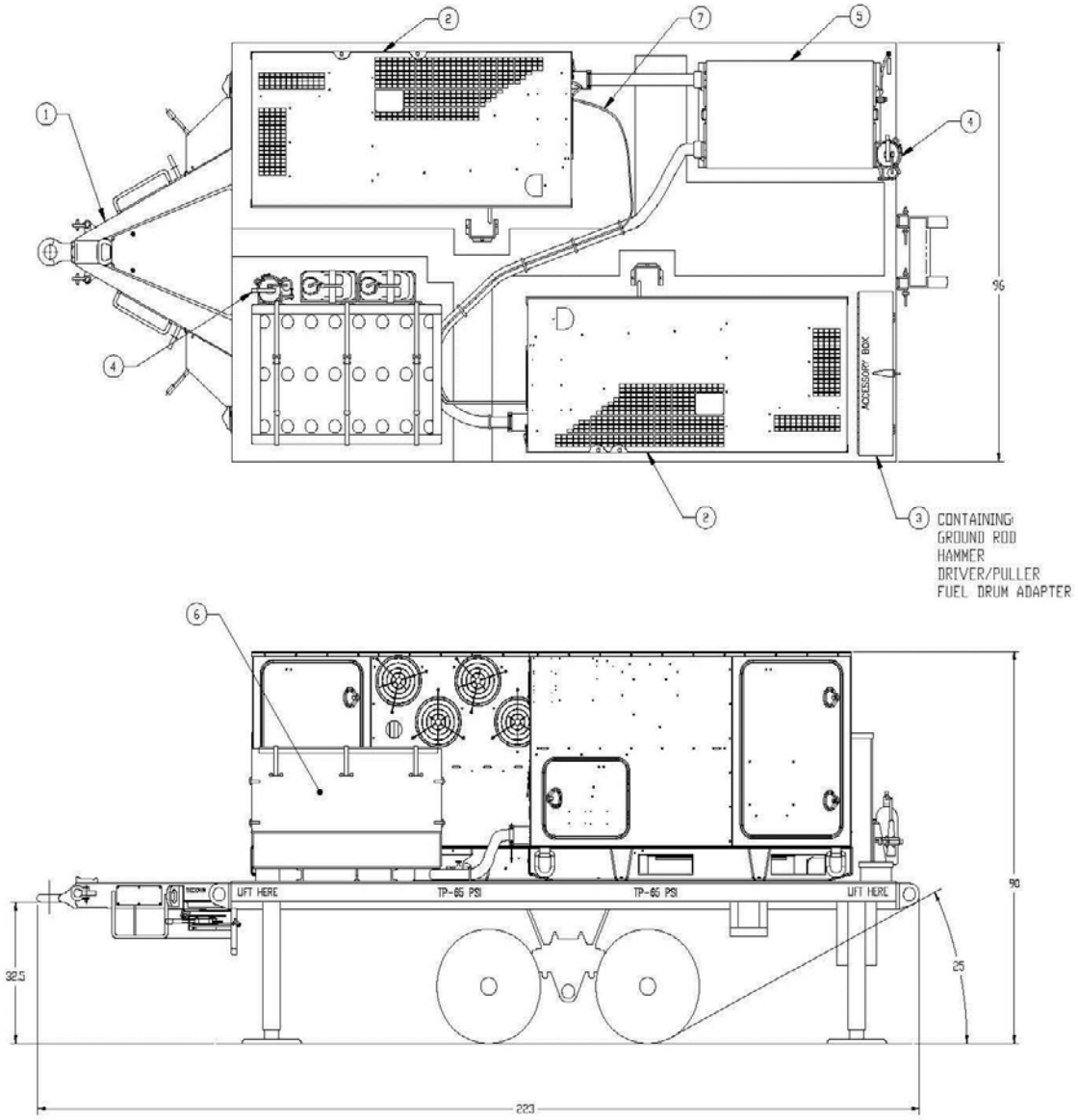

FIND NO.	COMPONENT	QTY	IDENTIFIER
1	AF Trailer Generator Assembly, M1061A1	1	30554-04-23000
2	MEP-1070	2	6115-01-561-7788
3	Accessory box	1	97403-13229E7946
4	Fire extinguisher, 5 lb., A-A-1106	2	4210-00-270-4512
5	Switch Box	1	97403-13230E4550-3
6	Cable Storage Box Assembly	1	97403-13230E4580
7	Paralleling Cable Assembly	1	30554-04-21228

FIGURE A- 26 PP-3206 - AMMPS Power Plant, 60 kW, 50/60 Hz (Continued)

Source: https://assist.dla.mil -- Downloaded: 2016-12-11T08:30Z
Check the source to verify that this is the current version before use.

APPENDIX A

Identification Data			
Model	**NSN**	**LIN**	**SSN**
PP-3216	6115-01-613-9296		R62700
Physical Characteristic			
Dimension: LWH (in)	**Ship Cube (ft^3)**	**Wet Weight (lbs)**	**Ship Weight (lbs)**
223 x 96 x 90	1115	14700	13600
Documentation			
Technical Manual	**Specification**	**Camouflage Drawing**	**Top Assembly**
TM 9-6115-666-13&P			TA-04-3216

FIGURE A- 27 PP-3216 - AMMPS Power Plant, 60 kW, 400 Hz

Source: https://assist.dla.mil -- Downloaded: 2016-12-11T08:30Z
Check the source to verify that this is the current version before use.

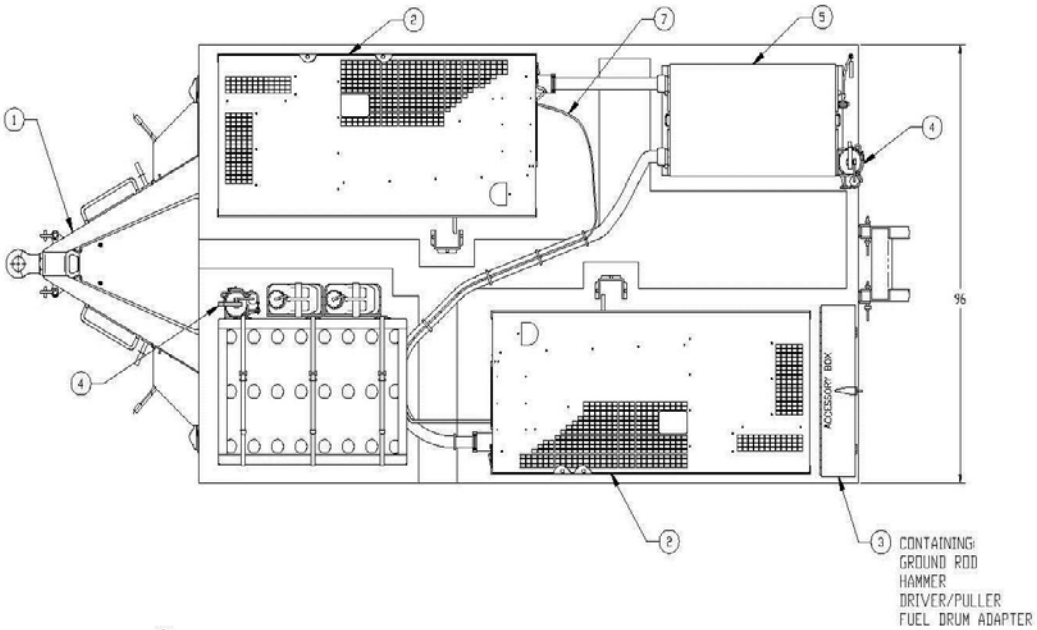

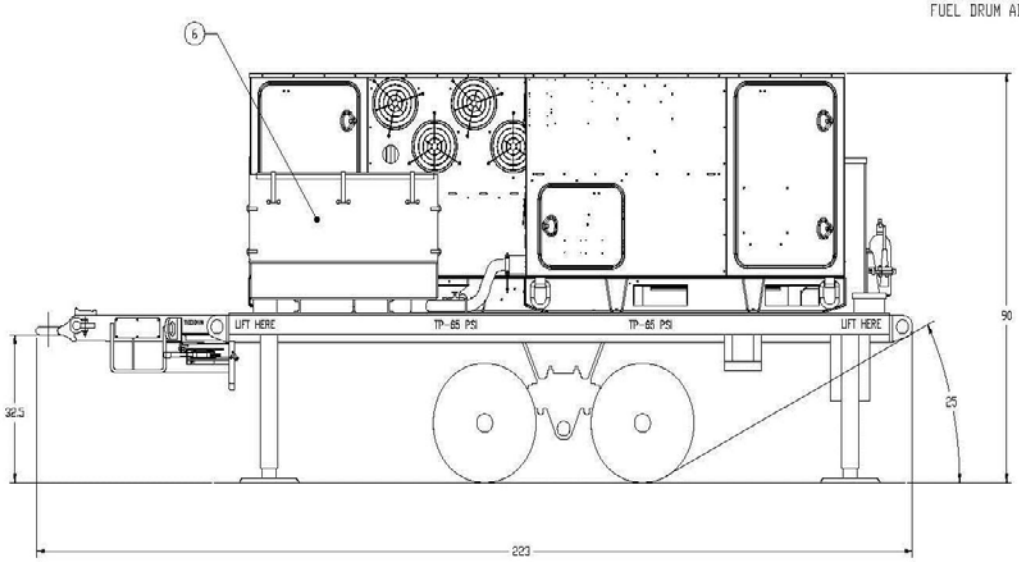

FIND NO.	COMPONENT	QTY	IDENTIFIER
1	AF Trailer Generator Assembly, M1061A1	1	30554-04-23000
2	MEP-1071	2	6115-01-561-7895
3	Accessory box	1	97403-13229E7946
4	Fire extinguisher, 5 lb., A-A-1106	2	4210-00-270-4512
5	Switch Box	1	97403-13230E4550-4
6	Cable Storage Box Assembly	1	97403-13230E4580
7	Paralleling Cable Assembly	1	30554-04-21228

FIGURE A- 27 PP-3216 - AMMPS Power Plant, 60 kW, 400 Hz (Continued)

Source: https://assist.dla.mil -- Downloaded: 2016-12-11T08:30Z
Check the source to verify that this is the current version before use.

A.3.1.8 Tactical Quiet Generator Set, DED, 100 kW

TABLE A- IX Characteristic Data for MEP-807A

Identification Data				
Model	MEP-807A			
Description	100 kW TQG, 50/60 Hz, DED, Skid Mounted			
NSN	6115-01-296-1463			
LIN	G17596			
SSN	M54400			
Specification				
Trailer Configuration	PU-807A, FIGURE A- 29			
Physical Characteristics				
Dimensions LWH (in)	106 x 40 x 65		Ship Cube (ft^3) 159	
Wet Weight (lbs)	6100			
Engine	Caterpillar – Model: 3126B 4 cyl Turbo Diesel, 282 hp @ 1800 RPM, 24 VDC starter, liquid cooled, electronic governor, EPA certified			
Instrumentation	Digital Display			
Fuels	Diesel DL-1, DL-2; Jet Fuel JP-8.			
Fuel Tank Capacity (Gal)	66			
Performance Characteristics				
Power Rating	60 Hz: 100 kW, 0.8 pf @ 4000 ft/95°F, 50 Hz: 83.3 kW, 0.8 pf @ 4000 ft/95°F			
Environmental Capability	-25°F to 120°F, rain, humidity, altitude, sand/ dust, transportation, cold storage: -60°F, salt spray, fungus, 15° incline.			
Protective Devices	Automatic shut down for overspeed and short circuit. Automatic shut down with emergency bypass for low oil pressure, high temperature, low fuel, and over-voltage. Drop load for under voltage, over current, and reverse power.			
Fuel consumption	7.8 gal/hour @ rated load			
Human Factors	MIL-STD-1474.			
Noise	70/68 dBA @ 7 meters (23 feet)			
Reliability (MTBF)	1250 hr			
Maintenance Ratio	0.026 max			
Electrical Characteristics				
Basic Design	Drip proof generator enclosure, fungus & moisture treated, solid state voltage regulator, solderless connectors, Synchronous. brushless generator			
EMI	Meets MIL-STD-461E			
EMP	HAEMP IAW MIL-STD-2169			
Motor load	40% dip, 5 sec to 95% init volt			
Voltage Connection	120/208V, 3ph, 4 wire		240/416V, 3ph, 4 wire	
Voltage adj. Range	**50 Hz**	**60 Hz**	**50 Hz**	**60 Hz**
	190 – 213 V	197 - 240 V	380 – 426 V	395 - 480 V
Freq. adj. Range	± 2 Hz			

Electrical Performance			
Electric Power Quality		**Frequency**	**AC Voltage**
Regulation		3%	3%
Voltage modulation			1%
Short term steady state stability (30 sec)		2% bandwidth	2% bandwidth
Long term steady state stability (4 hr)		3% bandwidth	4% bandwidth
Application of rated load	transient	4% under	20% dip
	recovery time	4 sec	3 sec
Rejection of rated load	transient	4% over	30% rise
	recovery time	4 sec	3 sec
Max waveform deviation factor			5%
Individual waveform harmonic			2%

Source: https://assist.dla.mil -- Downloaded: 2016-12-11T08:30Z
Check the source to verify that this is the current version before use.

Optional Equipment			
Description	**NSN**	**Weight (lbs)**	**Effect on Dimensions (in)**
Winterization kit			None (internal)
Technical Manuals			
Army	**Air Force**	**Marine Corps**	**Navy**
TM 9-6115-729-10	35 C2-3-519-1	TM07464C-10/1	
TM 9-6115-729-24& P	35 C2-3-519-2	TM07464C-24/2	

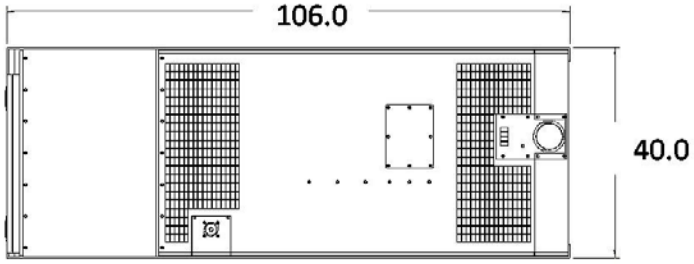

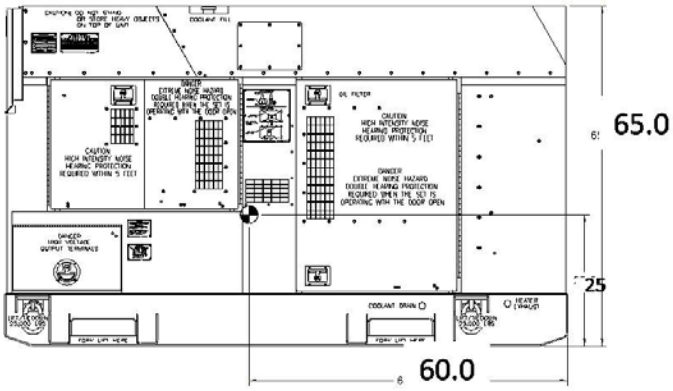

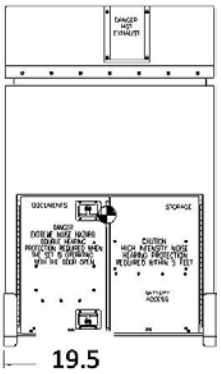

FIGURE A- 28 Tactical Quiet Generator Set, DED, 100 kW, 50/60 Hz

Source: https://assist.dla.mil -- Downloaded: 2016-12-11T08:30Z
Check the source to verify that this is the current version before use.

Identification Data			
Model	**NSN**	**LIN**	**SSN**
PU-807A	6115-01-471-7088	G17528	M54400
Physical Characteristics			
Dimension: LWH (in)	**Ship Cube (ft^3)**	**Wet Weight (lbs)**	**Ship Weight (lbs)**
225 x 96 x 102	1275	11620	11620
Documentation			
Technical Manual	**Specification**	**Camouflage Drawing**	**Top Assembly**
		97403-13228E1717	TA-0116-1910

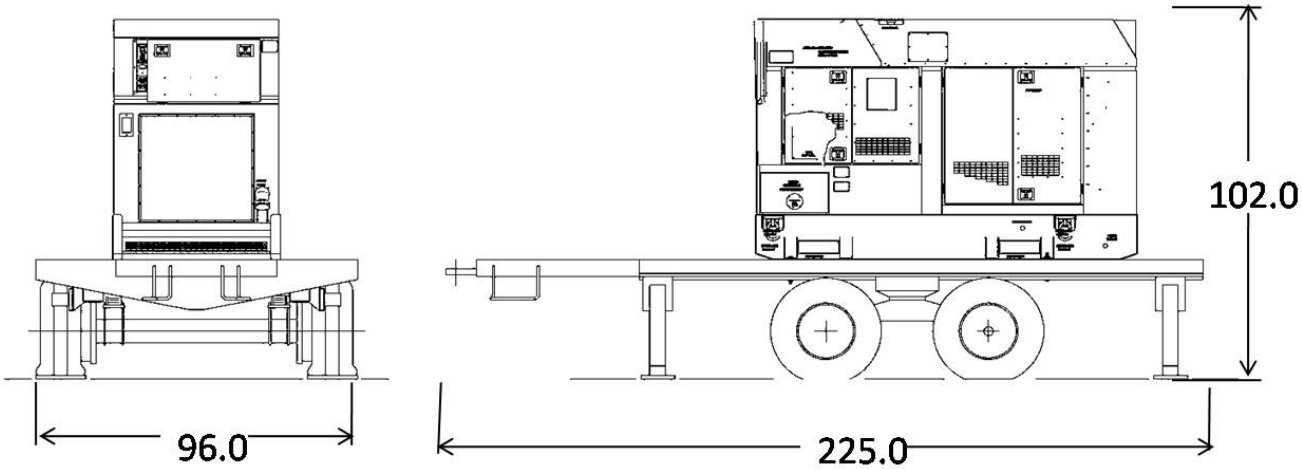

FIND NO.	COMPONENT	QTY	IDENTIFIER
1	5 Ton modified trailer, M1061A1	1	97403-13230E4570
2	MEP-807A	1	6115-01-296-1463
3	Accessory box	1	97403-13229E7946
4	Fire extinguisher, 5 lb., A-A-1106	1	4210-00-270-4512

FIGURE A- 29 PU-807A - TQG Power Unit, 100 kW, 50/60 Hz

Source: https://assist.dla.mil -- Downloaded: 2016-12-11T08:30Z
Check the source to verify that this is the current version before use.

This Page Intentionally Left Blank

Source: https://assist.dla.mil -- Downloaded: 2016-12-11T08:30Z
Check the source to verify that this is the current version before use.

A.3.1.9 Tactical Quiet Generator Set, DED, 200 kW

TABLE A- X Characteristic Data for MEP-809A

Identification Data				
Model	MEP-809A			
Description	200 kW TQG, 50/60 Hz, DED, Skid Mounted			
NSN	6115-01-296-1462			
LIN	G17664			
SSN	M54400			
Specification				
Trailer Configuration	PU-809A, FIGURE A- 31			
Physical Characteristics				
Dimensions LWH (in)	114 x 50 x 75			
Ship Cube (ft^3)	247			
Wet Weight (lbs)	9300			
Engine	Caterpillar – Model: C-12 4 cyl Turbo Diesel, 395 hp @ 1800 RPM, 24 VDC starter, liquid cooled, electronic governor, EPA certified			
Instrumentation	Digital Display			
Fuels	Diesel DL-1, DL-2; Jet Fuel JP-8.			
Fuel Tank Capacity (Gal)	128			
Performance Characteristics				
Power Rating	60 Hz: 200 kW, 0.8 pf @ 4000 ft/95°F, 50 Hz: 167 kW, 0.8 pf @ 4000 ft/95°F			
Environmental Capability	-25°F to 120°F, rain, humidity, altitude, sand/ dust, transportation, cold storage: -60°F, salt spray, fungus, 15° incline.			
Protective Devices	Automatic shut down for overspeed and short circuit. Automatic shut down with emergency bypass for low oil pressure, high temperature, low fuel, and over-voltage. Drop load for under voltage, over current, and reverse power.			
Fuel consumption	13.9 gal/hour @ rated load			
Human Factors	MIL-STD-1474			
Noise	70/68 dBA @ 7 meters (23 feet)			
Reliability (MTBF)	600 hr minimum, 850 hr objective			
Maintenance Ratio	TBD			
Electrical Characteristics				
Basic Design	Drip proof generator enclosure, fungus & moisture treated, solid state voltage regulator, solderless connectors, synchronous, brushless generator.			
EMI	Meets MIL-STD-461E			
EMP	HAEMP IAW MIL-STD-2169			
Motor load	40% dip, 5 sec to 95% init volt			
Voltage Connection	120/208V, 3ph, 4 wire		240/416V, 3ph, 4 wire	
	50 Hz	**60 Hz**	**50 Hz**	**60 Hz**
Voltage adj. Range	190 – 213 V	197 - 240 V	380 – 426 V	395 - 480 V
Freq. adj. Range	± 2 Hz			

Electrical Performance			
Electric Power Quality		**Frequency**	**AC Voltage**
Regulation		3%	3%
Voltage modulation			1%
Short term steady state stability (30 sec)		2% bandwidth	2% bandwidth
Long term steady state stability (4 hr)		3% bandwidth	4% bandwidth
Application of rated load	transient	4% under	30% dip
	recovery time	4 sec	3 sec
Rejection of rated load	transient	4% over	30% rise
	recovery time	4 sec	3 sec
Max waveform deviation factor			5%
Individual waveform harmonic			2%

Source: https://assist.dla.mil -- Downloaded: 2016-12-11T08:30Z
Check the source to verify that this is the current version before use.

TABLE A-X Characteristic Data for MEP-809A Continued.

Optional Equipment			
Description	**NSN**	**Weight (lbs)**	**Effect on Dimensions (in)**
Winterization kit			None (internal)
Technical Manuals			
Army	**Air Force**	**Marine Corps**	**Navy**
TM9-6115-730-10	35C2-3-520-1	NONE	
TM 9-6115-730-24& P	35C2-3-520-2		

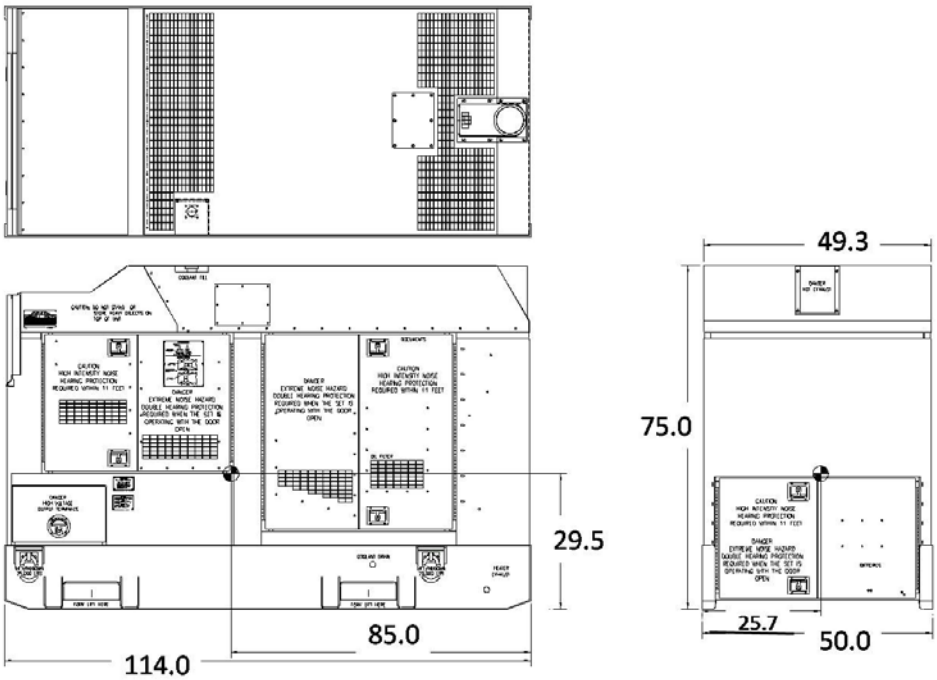

FIGURE A- 30 Tactical Quiet Generator Set, DED, 200 kW

Source: https://assist.dla.mil -- Downloaded: 2016-12-11T08:30Z
Check the source to verify that this is the current version before use.

Identification Data			
Model	**NSN**	**LIN**	**SSN**
PU-809A	6115-01-471-7085	G26395	M54400
Physical Characteristics			
Dimension: LWH (in)	**Ship Cube (ft^3)**	**Wet Weight (lbs)**	**Ship Weight (lbs)**
225 x 96 x 112	1400	14780	14780
Documentation			
Technical Manual	**Specification**	**Camouflage Drawing**	**Top Assembly**
		97403-13228E1718	TA-0116-2910

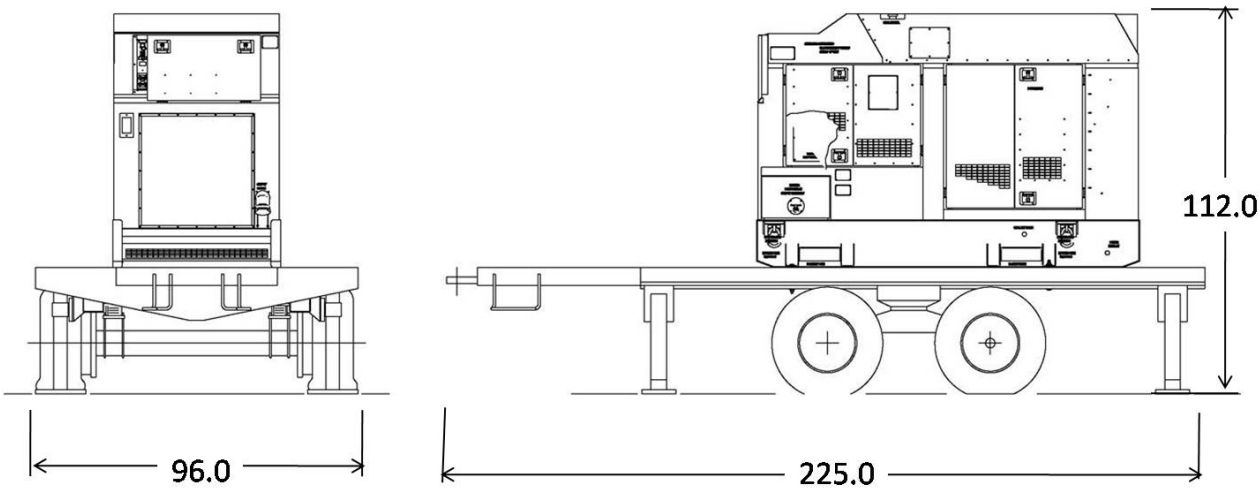

FIND NO.	COMPONENT	QTY	IDENTIFIER
1	5 Ton modified trailer, M1061A1	1	97403-13230E4570
2	MEP-809A	1	6115-01-296-1462
3	Accessory box	1	97403-13229E7940
4	Fire extinguisher, 5 lb., A-A-1106	1	4210-00-270-4512

FIGURE A- 31 PU-809A - TQG Power Unit, 200 kW, 50/60 Hz

Source: https://assist.dla.mil -- Downloaded: 2016-12-11T08:30Z
Check the source to verify that this is the current version before use.

APPENDIX B

POWER DISTRIBUTION SYSTEMS

B.1 SCOPE

B.1.1 Scope. This Appendix provides information on various DoD service specific Power Distribution Systems. Data contained in this Appendix is provided to assist both field operation and materiel developer personnel to select power distribution equipment that will best meet their needs. This Appendix is included for informational purposes only.

B.1.2 Appendix organization. The characteristic data for the Power Distribution Systems (see TABLE B- I) is arranged by number of phases, current rating per phase and utility.

TABLE B- I Guide to Power Distribution Systems Characteristic Data

BRANCH	MODEL NO.	ITEM DESCRIPTION	FIGURE	Pg.
ARMY	M200 A/P	200 amp/phase Feeder System - 3 Phase	FIGURE B- 1	79
	M100 A/P	100 amp/phase Feeder System - 3 Phase	FIGURE B- 3	81
	M40 A/P	40 amp/phase Distribution System - 3 Phase	FIGURE B- 5	83
	M60 A/P	60 amp Distribution System - 1 Phase	FIGURE B- 7	85
	M46	Electrical Kit, Utility Receptacle	FIGURE B- 9	87
	SUA 60/40	Universal Adapter	FIGURE B- 11	89
MARINES	DB-30NA-A22-S3	MEPDIS-R – 5kW Outdoor PDB	FIGURE B- 12	90
	DB-30NA-AQQ-S3	MEPDIS-R – 5kW Indoor PDB	FIGURE B- 14	92
	DB-60MA-F22QS3	MEPDIS-R – 15kW PDB	FIGURE B- 16	94
	DB100MA-P22QS3	MEPDIS-R – 30kW PDB	FIGURE B- 18	96
	DB350MA-P2WAS3	MEPDIS-R – 100kW PDB	FIGURE B- 20	98
	DB350MA-P2WQS	MEPDIS-R – 300kW PDB	FIGURE B- 22	100
NAVY	ASSEMBLY 30208	480-208Y/120V 15kVA Portable Distribution Center	FIGURE B- 24	102
	ASSEMBLY 30209	480-208Y/120V 30kVA Portable Distribution Center	FIGURE B- 26	104
	ASSEMBLY 30030	Panel Power Distribution 200Amp 120V 3PH 5-Wire LEX	FIGURE B- 28	106
	ASSEMBLY 30133	Distribution Center Portable 208Y/120V 60 Amp (15kW)	FIGURE B- 30	108
	ASSEMBLY 30211	GFI 10kW-208/120V 3 Phase 30 Amps Distribution Center Portable	FIGURE B- 31	109
	ASSEMBLY 32600	480V 3 Phase 400 Amps Weatherproof Panel board Assembly Portable	FIGURE B- 33	111
	PWR DIST PNL 60kW	Panel Power Distribution Box 200 Amp (60kW)	FIGURE B- 35	113
AIR FORCE	Not applicable			

B.2 DETAILED DESCRIPTIONS

Source: https://assist.dla.mil -- Downloaded: 2016-12-11T08:30Z
Check the source to verify that this is the current version before use.

B.2.1 Detailed Descriptions. Detailed descriptions are contained in the characteristic data found in B.2.1.1 through B.2.1.19.

Source: https://assist.dla.mil -- Downloaded: 2016-12-11T08:30Z
Check the source to verify that this is the current version before use.

B.2.1.1 PDISE, 200 Amp per Phase Feeder System - 3 Phase. The Army supported M200 is used to distribute 3 phase power from 60, 100 and 200 kW MEPGS.

Identification Data		
MODEL	M200 A/P Electrical Feeder System	
DESCRIPTION	120/208V, 3 phase, 200 amp/phase.	
CIRCUIT BREAKERS	Hydraulic-magnetic	
NSN	**LIN**	**SSN**
6150-01-308-5672	F55689	R45500
Physical Characteristics		
DIMENSION: LWD in inches	**SHIP CUBE (ft^3)**	**WEIGHT (lbs)**
33.5 x 23.0 x 20.4	9.1	140

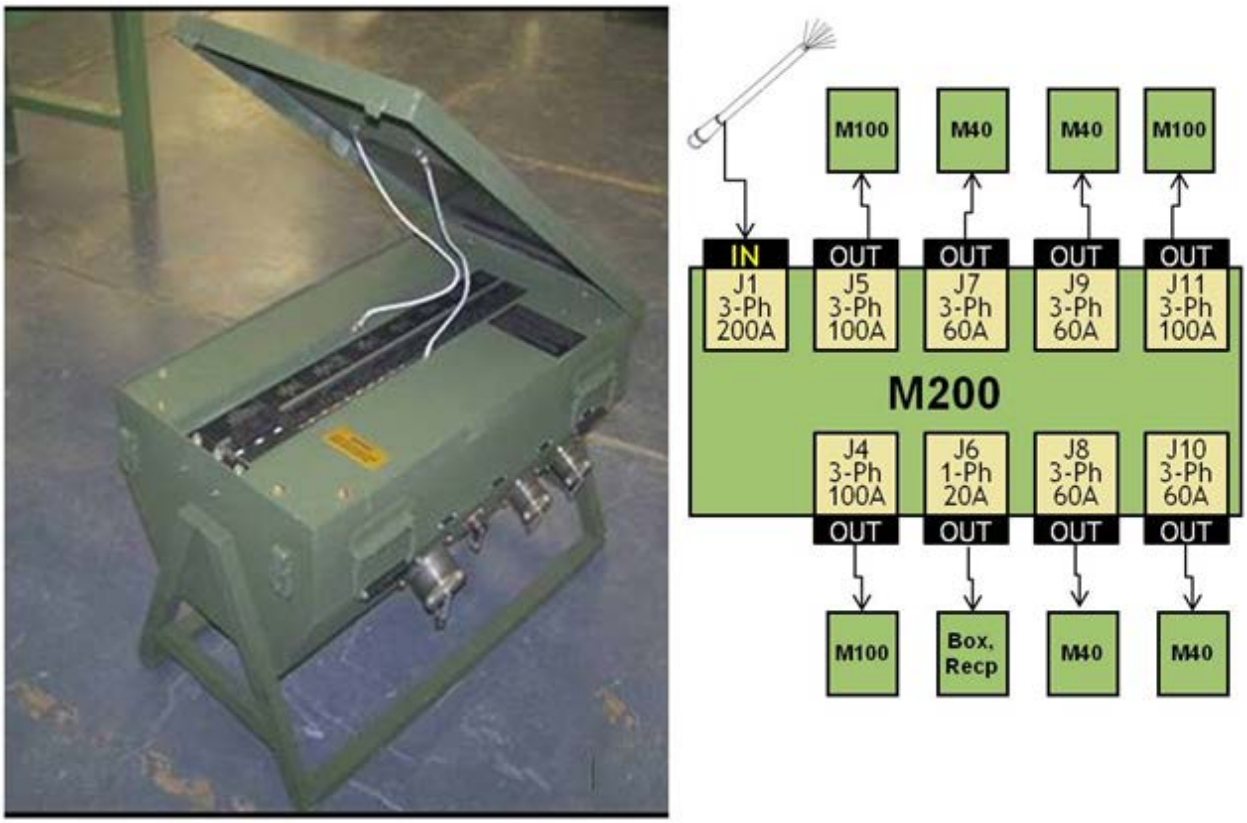

FIGURE B- 1 PDISE, M200 Configuration

Source: https://assist.dla.mil -- Downloaded: 2016-12-11T08:30Z
Check the source to verify that this is the current version before use.

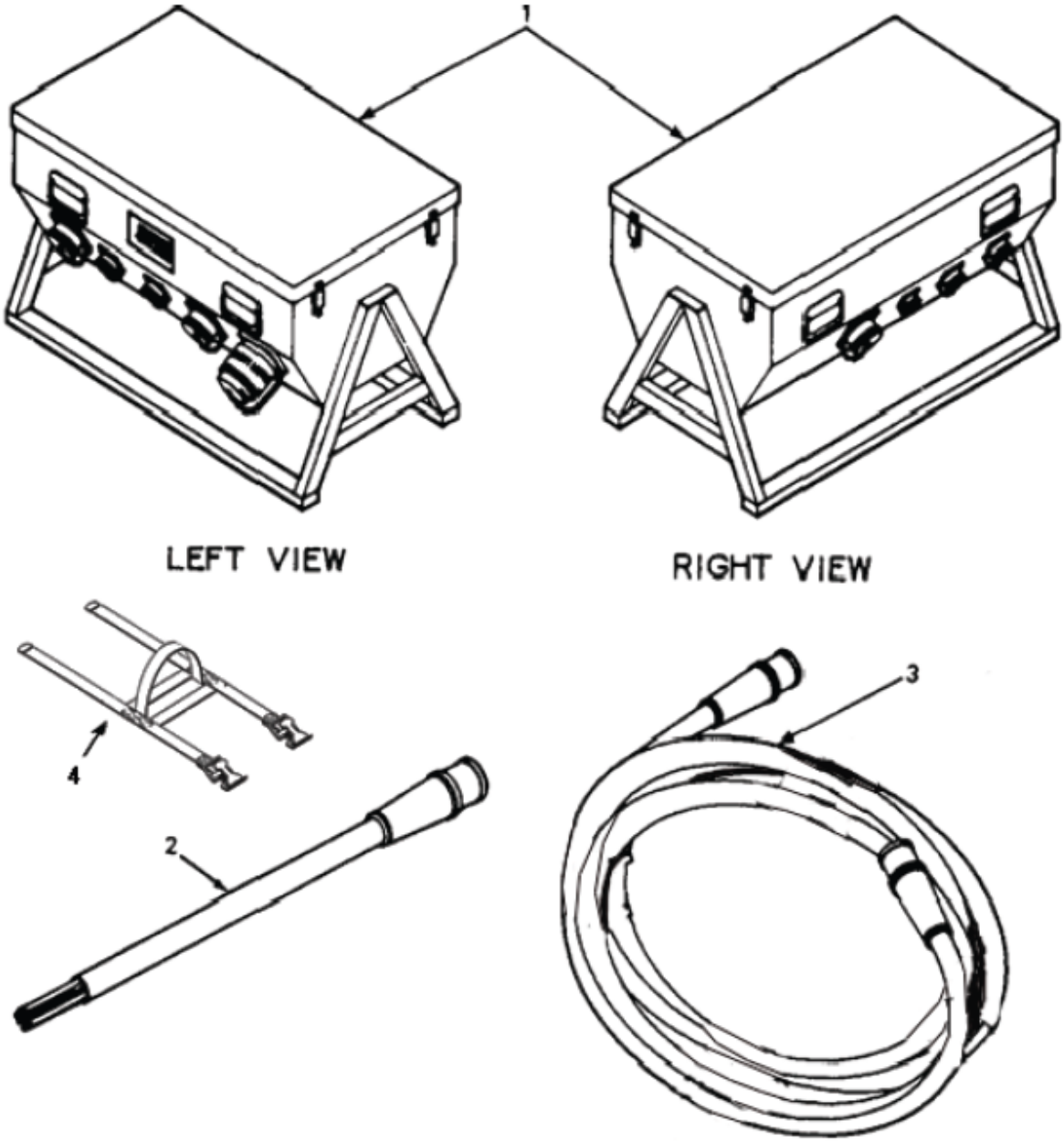

FIND NO.	COMPONENT	QTY
1	Electrical Feeder Center: 3 phase 120/208V, 200 amp/phase	1
2	Pigtail Cable: 4ft (1.2m), 200 amp/phase, 8 pin	1
3	Service/Feeder Cable: 25 ft (7.62m), 200 amp/phase, 8 pin	4
4	Double Strap Cable Carrier	16

FIGURE B- 2 PDISE, M200 Components

Source: https://assist.dla.mil -- Downloaded: 2016-12-11T08:30Z
Check the source to verify that this is the current version before use.

B.2.1.2 PDISE, 100 Amp per Phase Feeder System - 3 Phase. The Army supported M100 is used to distribute 3 phase power from 30, 60, 100 and 200 kW MEPGS.

Identification Data		
MODEL	M100 A/P Electrical Feeder System	
DESCRIPTION	120/208 V, 3 phase, 100 amp/phase.	
CIRCUIT BREAKERS	Hydraulic-magnetic	
NSN	**LIN**	**SSN**
6150-01-308-5671	F55621	R45400
Physical Characteristics		
DIMENSION: LWD in inches	**SHIP CUBE (ft^3)**	**WEIGHT (lbs)**
24.3 x 22.4 x 20.4	6.4	77

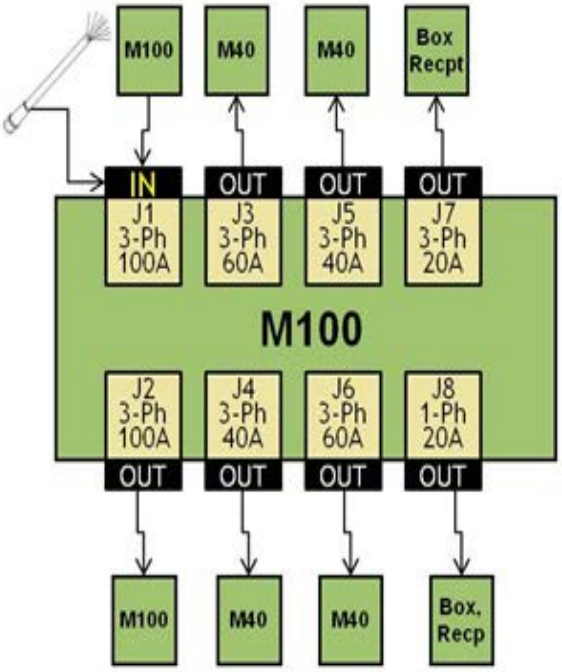

FIGURE B- 3 PDISE, M100 Configuration

Source: https://assist.dla.mil -- Downloaded: 2016-12-11T08:30Z
Check the source to verify that this is the current version before use.

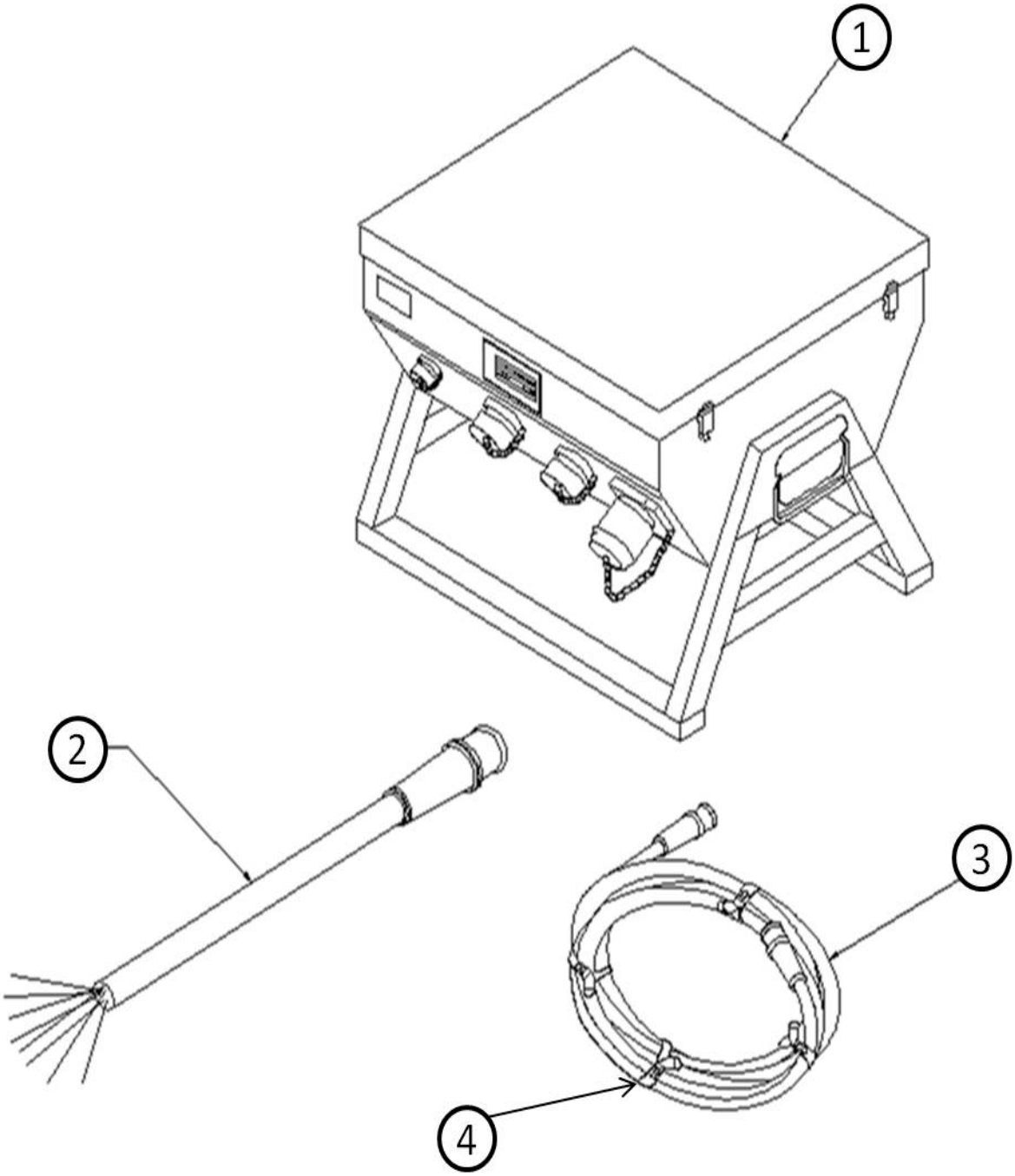

FIND NO.	COMPONENT	QTY
1	Electrical Feeder Center: 3 phase 120/208V, 100 amp/phase	1
2	Pigtail Cable: 4ft (1.2m), 100 amp/phase, 8 pin	1
3	Service/Feeder Cable: 50 ft(15.2m), 100 amp/phase, 8 pin	2
4	Single Strap Cable Carrier	8

FIGURE B- 4 PDISE, M100 Components

Source: https://assist.dla.mil -- Downloaded: 2016-12-11T08:30Z
Check the source to verify that this is the current version before use.

B.2.1.3 PDISE, 40 Amp per Phase Distribution System - 3 Phase. The Army supported M40 is used to distribute power from 10 through 200 kW MEPGS.

Identification Data		
MODEL	M40 A/P Electrical Distribution System	
DESCRIPTION	120/208 V, 3 phase, 40 amp/phase. Includes distribution center, cables, carrying straps, receptacles and storage container	
CIRCUIT BREAKERS	hydraulic-magnetic	
NSN	**LIN**	**SSN**
6150-01-307-9446	F55485	R45300
Physical Characteristics		
DIMENSION: LWD in inches	**SHIP CUBE (ft^3)**	**WEIGHT (lbs)**
24.3 x 21.8 x 16.1	4.9	55

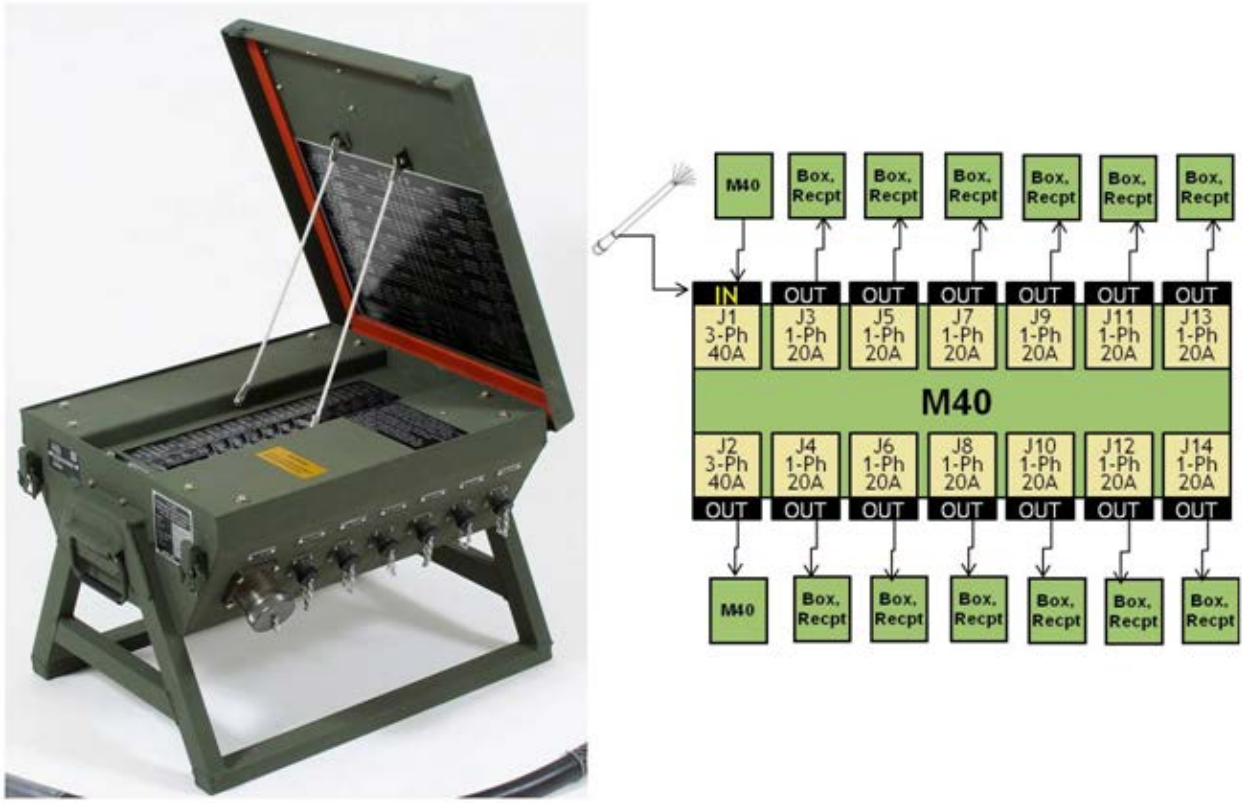

FIGURE B- 5 PDISE, M40 Electrical Feeder Center

Source: https://assist.dla.mil -- Downloaded: 2016-12-11T08:30Z
Check the source to verify that this is the current version before use.

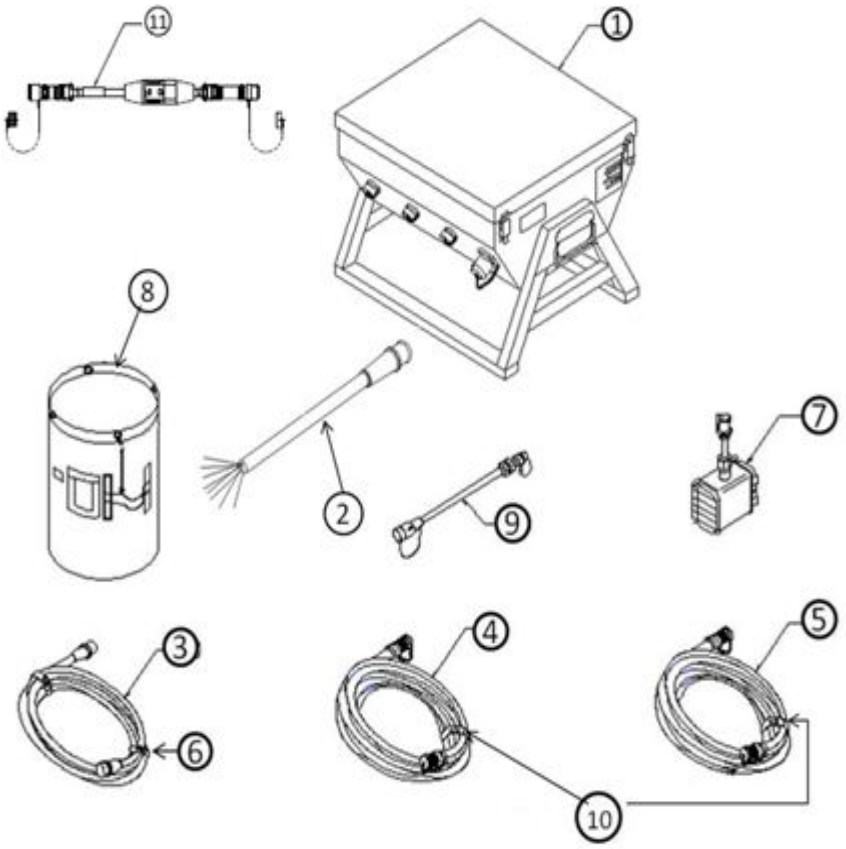

FIND NO.	COMPONENT	QTY
1	Distribution Center: 3 phase 120/208V, 40 amp/phase	1
2	Pigtail Cable: 4ft (1.2m), 40/60 amp/phase, 5 pin	1
3	Service/Feeder Cable: 50 ft (15.2m), 40/60 amp/phase, 5 pin	2
4	Extension Cable 25ft (7.6m) 20 amp/phase, 3 pin	3
5	Extension Cable 50ft (15.2m) 20 amp/phase, 3 pin	3
6	Single Strap Cable Carrier	4
7	Box Receptacle, 120V, 20 amp	1
8	Transit and Storage Container	1
9	Interface Cable	2
10	Cable Carrying Strap	6
11	In-Line GFCI	1

FIGURE B- 6 PDISE, M40 Components

Source: https://assist.dla.mil -- Downloaded: 2016-12-11T08:30Z
Check the source to verify that this is the current version before use.

B.2.1.4 60 Amp Distribution System - Single Phase. The Army supported M60 is used to distribute single phase power from 5 through 15 kW MEPGS and single phase output from feeder systems.

Identification Data		
MODEL	M60 A/P Electrical Distribution System	
DESCRIPTION	120 V, 1 phase, 60 amp distribution center	
CIRCUIT BREAKERS	Hydraulic-magnetic	
NSN	**LIN**	**SSN**
6150-01-307-9445	F55553	R45200
Physical Characteristics		
DIMENSION: LWD in inches	**SHIP CUBE (ft^3)**	**WEIGHT (lbs)**
24.3 x 21.8 x 15.5	4.7	45

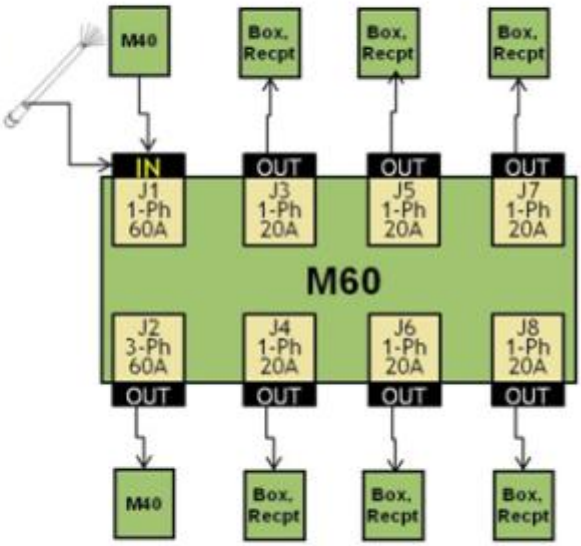

FIGURE B- 7 PDISE, M60 Electrical Distribution System

Source: https://assist.dla.mil -- Downloaded: 2016-12-11T08:30Z
Check the source to verify that this is the current version before use.

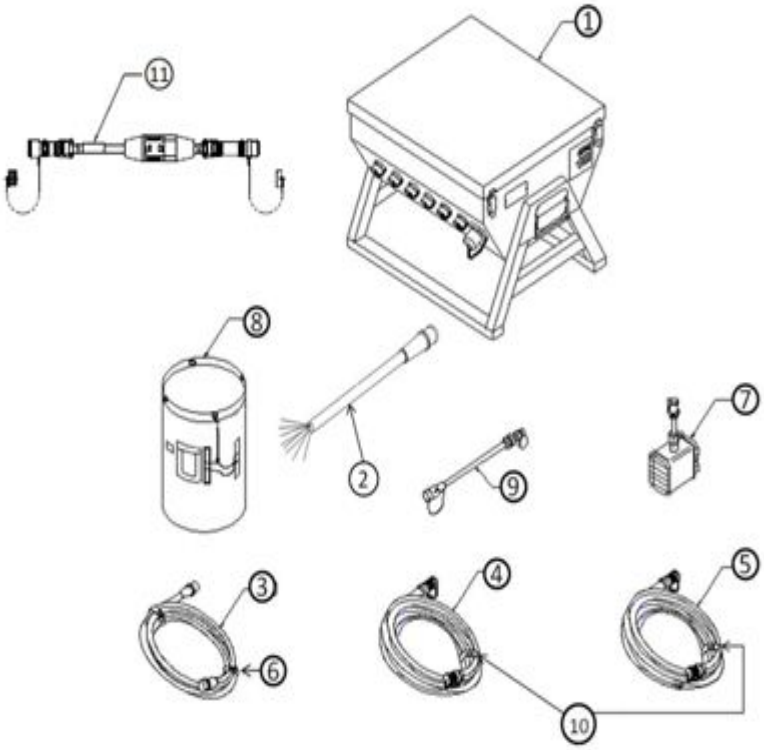

FIND NO.	COMPONENT	QTY
1	Electrical Feeder Center	1
2	Pigtail Cable, 4ft (1.2m), 60 amp, 4 pin	1
3	Cable, 60 amp, 100 ft (30.5m)	1
4	Cable, 20 amp, 25 ft (7.6m)	3
5	Cable, 20 amp, 50 ft (15.3m)	3
6	Single Strap Cable Carrier	4
7	Receptacle Box	1
8	Transit and Storage Container	1
9	Transition Cable 25 Outlet Light Set	2
10	Cable Carrying Strap	6
11	In-Line GFCI	1

FIGURE B- 8 PDISE, M60 Components

Source: https://assist.dla.mil -- Downloaded: 2016-12-11T08:30Z
Check the source to verify that this is the current version before use.

B.2.1.5 Utility Receptacles and Lighting Set. The Army supported M46 is used to distribute power from a distribution system to electrical receptacles and lighting.

Identification Data		
MODEL	M46 Electrical Utility Kit	
DESCRIPTION	Extension cords, utility receptacles and lighting sets	
NSN	**LIN**	**SSN**
6150-01-208-9751	U89185	R62800
Physical Characteristics		
DIMENSION: LWD in inches	**SHIP CUBE (ft^3)**	**WEIGHT (lbs)**
16.0 x 16.0 x 26.0	3.9	85

FIGURE B- 9 PDISE, M46

Source: https://assist.dla.mil -- Downloaded: 2016-12-11T08:30Z
Check the source to verify that this is the current version before use.

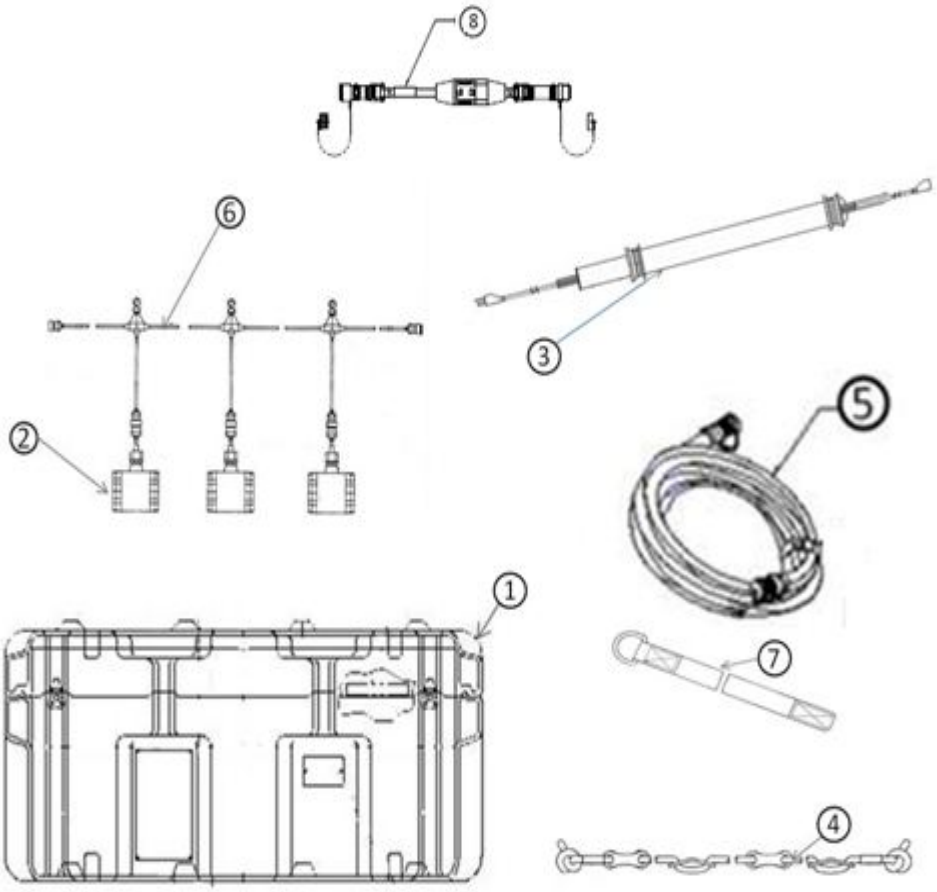

FIND NO.	COMPONENT	QTY
1	Transit and Storage Container	1
2	Receptacle Box 120V 20 amp	6
3	Fluorescent Utility Light	2
4	Support Rope Assembly, 53 ft (16.2m)	2
5	Extension Cables, 25 ft (7.6m)	6
6	Branch Circuit Cable Assembly 24 ft (7.3m) 20 amp, 3 pin	2
7	Cable Carrying Strap	8
8	In-Line GFCI	2

FIGURE B- 10 PDISE, M46 Components

Source: https://assist.dla.mil -- Downloaded: 2016-12-11T08:30Z
Check the source to verify that this is the current version before use.

B.2.1.6 Universal Adapter. The Army Supported Universal Adapter is designed to connect user electrical equipment, without military standard connectors, to the electrical power distribution equipment.

Identification Data		
MODEL	SUA 60/40	
DESCRIPTION	The Universal Adapter consists of a box with a 5-pin, 3-phase 40/60 amp input connector and five terminals. The box includes an insulated wrench for tightening/loosening the terminals.	
NSN	**LIN**	**SSN**
5975-01-247-4791		
DIMENSION: LWD in inches	**SHIP CUBE (ft^3)**	**WEIGHT (lbs)**
20.9 x 15.4 x 16	2.98	35.7

FIGURE B- 11 Universal Adapter

Source: https://assist.dla.mil -- Downloaded: 2016-12-11T08:30Z
Check the source to verify that this is the current version before use.

B.2.1.7 MEPDIS-R – 5kW Outdoor PDB. The Marine supported 5kW Non-Ground Fault Circuit Interrupter (GFCI) protected, outdoor model Power Distribution Box (PDB) can be directly fed from either a 100kW MEPDIS-R Box, 30kW MEPDIS-R Box or a 15 kW MEPDIS-R Box. The outputs can feed up to six 20 Amp Single Phase 5kW MEPDIS-R Cord Sets or "Y" cords, and up to three single phase 30 Amp receptacles.

Identification Data		
MODEL	DB-30NA-A22-S3	
DESCRIPTION	**Input**	**Output**
	Circuit Breaker Protection 5 wire, 3-phase, 30 amp Pin & Sleeve	Pin and Sleeve Receptacles: 6 each: 3 wire, 1-phase, 20 amps 3 each: 3 wire, 1-phase, 30 amps
CIRCUIT BREAKERS		
NSN	**TAMCN**	**ID**
6110-01-532-1821	B00287B	11186A
Physical Characteristics		
DIMENSION: LWD in inches	**SHIP CUBE (ft^3)**	**WEIGHT (lbs)**
19 X 18 X 14	2.77	48

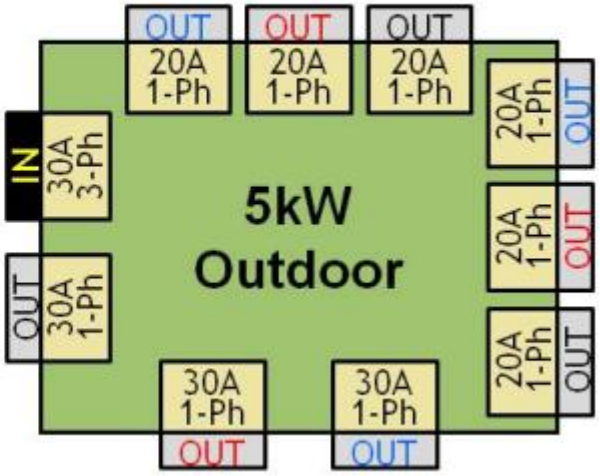

FIGURE B- 12 5kW Outdoor PDB Configuration

Source: https://assist.dla.mil -- Downloaded: 2016-12-11T08:30Z
Check the source to verify that this is the current version before use.

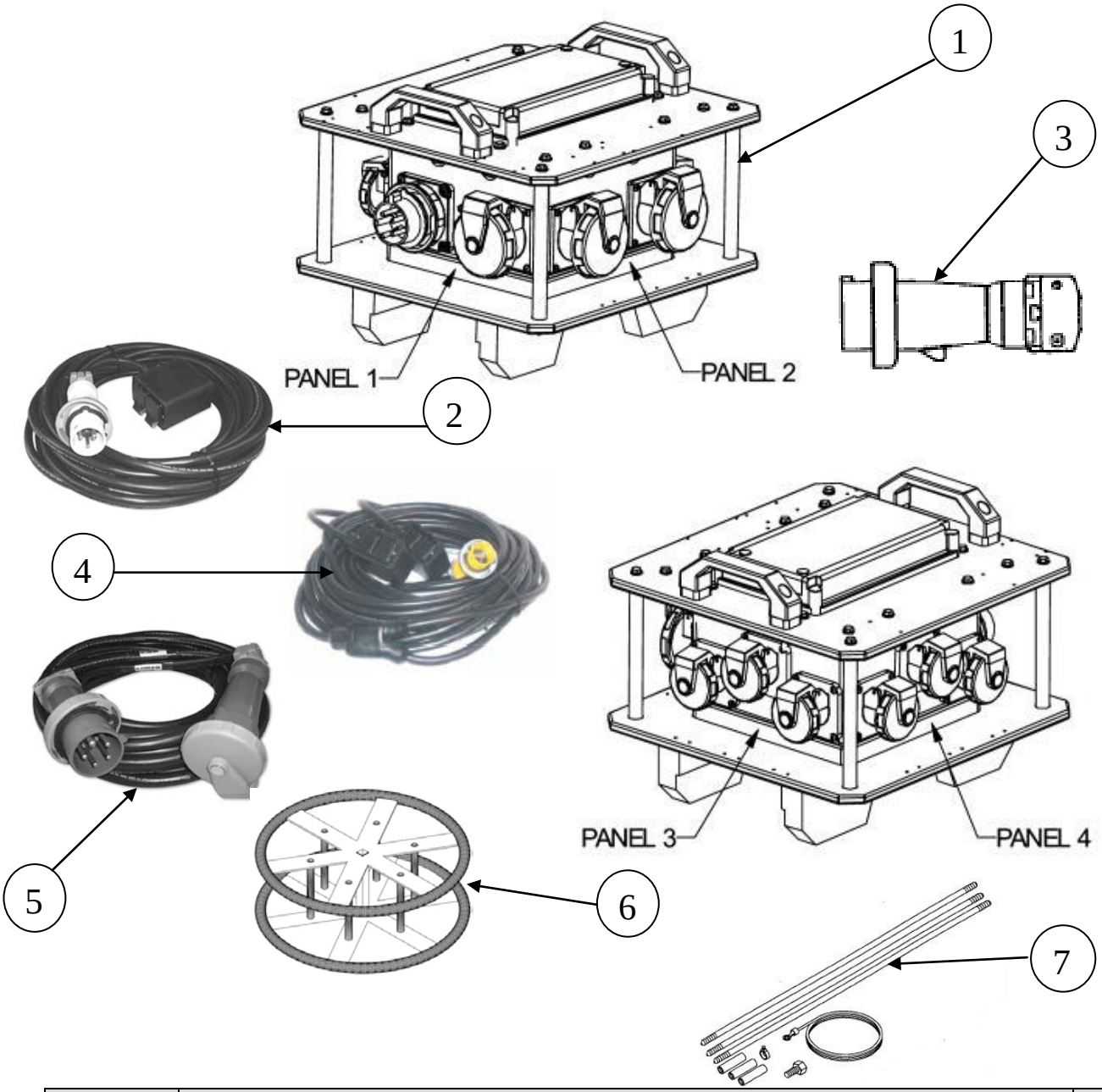

FIND NO.	COMPONENT	QTY
1	5kW Outdoor PBD	1
2	Cord Set: 50 ft(15.2m), 10/3 SEOW provides two 5-15 duplex receptacles	6
3	Connector, Plug, Electrical: 30A, single phase, straight shape, external coupling w/strain relief	3
4	"Y" Cable Assembly, Electrical – Provides split duplex receptacles	3
5	Cable Assembly, Power, Electrical: 50 Ft, 30A Cable Jump, Set #3, used to feed 5kW	1
6	Reel, Cable, Small: 11 in. wide, O.D.. 30 in.	1
7	Rod, Ground: stl; 3 sect; 0.625-11 IA in. UNC thd; 6 AWG; 72 in. ground wire; 0.625 in. dia. 108.000 in. oa lg	1

FIGURE B- 13 MEPDIS-R 5kW Outdoor PDB Components

Source: https://assist.dla.mil -- Downloaded: 2016-12-11T08:30Z
Check the source to verify that this is the current version before use.

B.2.1.8 MEPDIS-R – 5kW Indoor PDB. The Marine supported 5kW GFCI protected, indoor model Power Distribution Box (PDB) can be directly fed from either a 100 kW Box, 30kW Box or a 15 kW Box. The nine 20 Amp single phase GFCI Duplex Receptacles can be used to feed up to nine 5kW MEPDIS-R Indoor Cord Sets or additional equipment.

Identification Data		
MODEL	DB-30NA-AQQ-S3	
DESCRIPTION	**Input**	**Output**
	Circuit Breaker Protection 5 wire, 3-phase, 30 amp Pin & Sleeve	9 each: 3 wire, 1-phase, 120 VAC 20A GFCI Duplex Receptacles
CIRCUIT BREAKERS		
NSN	**TAMCN**	**ID**
6110-01-532-1794	B00277B	11185A
Physical Characteristics		
DIMENSION: LWD in inches	**SHIP CUBE (ft^3)**	**WEIGHT (lbs)**
19 X 19 X 14	2.77	49.5

FIGURE B- 14 5kW Indoor PDB Configuration

Source: https://assist.dla.mil -- Downloaded: 2016-12-11T08:30Z
Check the source to verify that this is the current version before use.

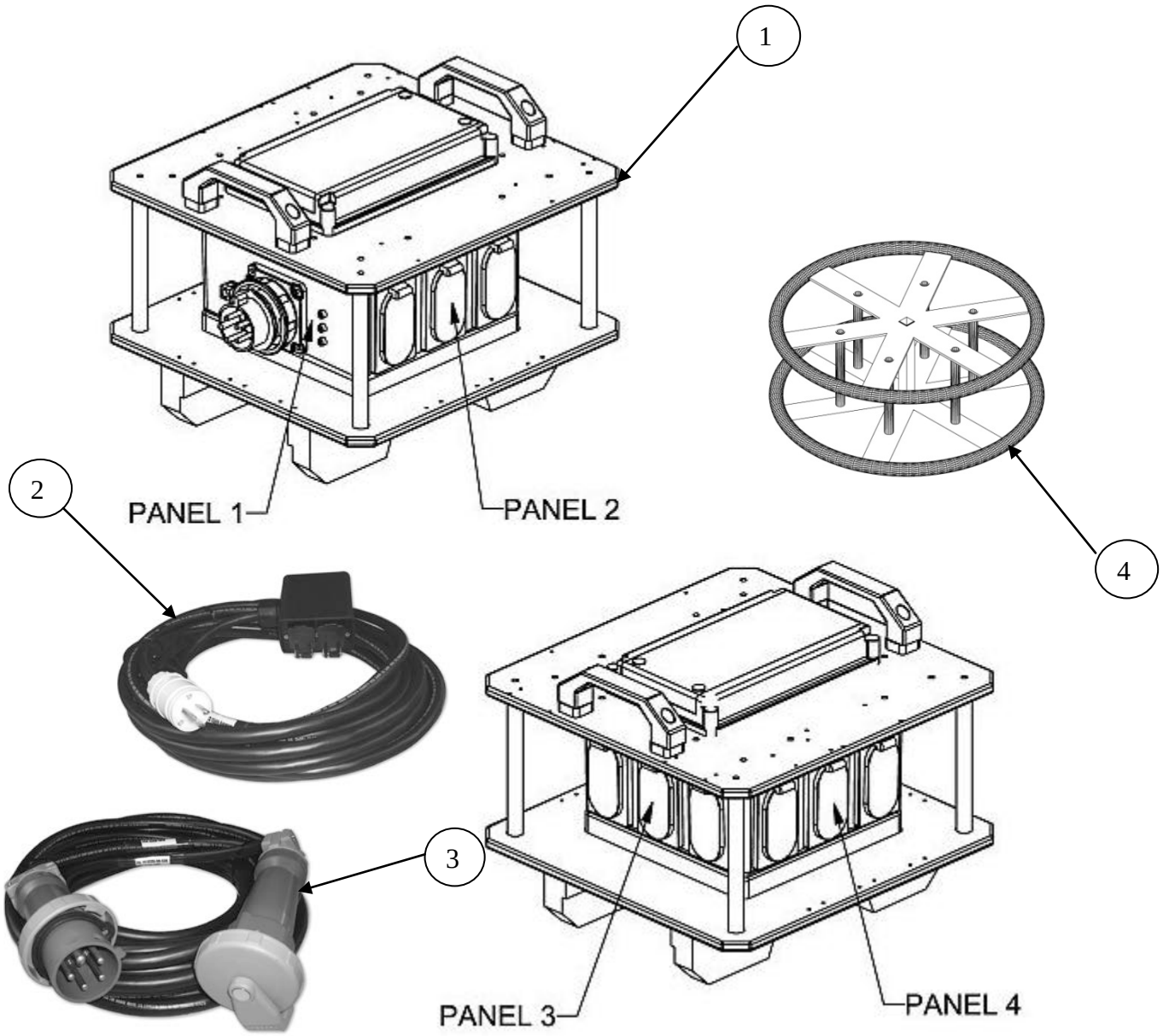

FIND NO.	COMPONENT	QTY
1	5kW Indoor PDB	1
2	Cable Assembly, Special Purpose, Electrical: Provides Duel Duplex Receptacles	6
3	Cable Assembly, Power, Electrical: 50 ft, 30A cable jump, set #3, 15kW-5kW	1
4	Reel, Cable, Small: 11 in. wide, O.D. 30 in	1

FIGURE B- 15 MEPDIS-R 5kW Indoor PDB Components

Source: https://assist.dla.mil -- Downloaded: 2016-12-11T08:30Z
Check the source to verify that this is the current version before use.

B.2.1.9 MEPDIS-R – 15kW PDB. The Marine supported 15kW model Power Distribution Box (PDB) can be directly fed from either a 100kW MEPDIS-R Box, 30kW Box, or up to two synchronized 60 Amp 3 Phase external power sources, independently or simultaneously. The outputs can be used to feed up to four 30 Amp 3 Phase 5kW MEPDIS-R Boxes; and up to four 20 Amp Single Phase 5kW MEPDIS-R Outdoor Cord Sets or "Y" Cords, has one 20Amp GFCI Duplex Receptacle.

Identification Data		
MODEL	DB-60MA-F22QS3	
DESCRIPTION	**Input**	**Output**
	Circuit Breaker Protection 2 each: 5 wire, 3-phase 60 amp Pin & Sleeve	Circuit Breaker Protection 4 each: 5 wire, 3-ph,30amp Pin & Sleeve 4 each: 3 wire, 1-ph,20amp Pin & Sleeve 1 each: 3 wire, 1-ph, 120 VAC 20A GFCI Duplex Receptacle
CIRCUIT BREAKERS		
NSN	**TAMCN**	**ID**
6110-01-532-1764	B0029	11183A
Physical Characteristics		
DIMENSION: LWD in inches	**SHIP CUBE (ft^3)**	**WEIGHT (lbs)**
26 X 23 X 17	5.8	83

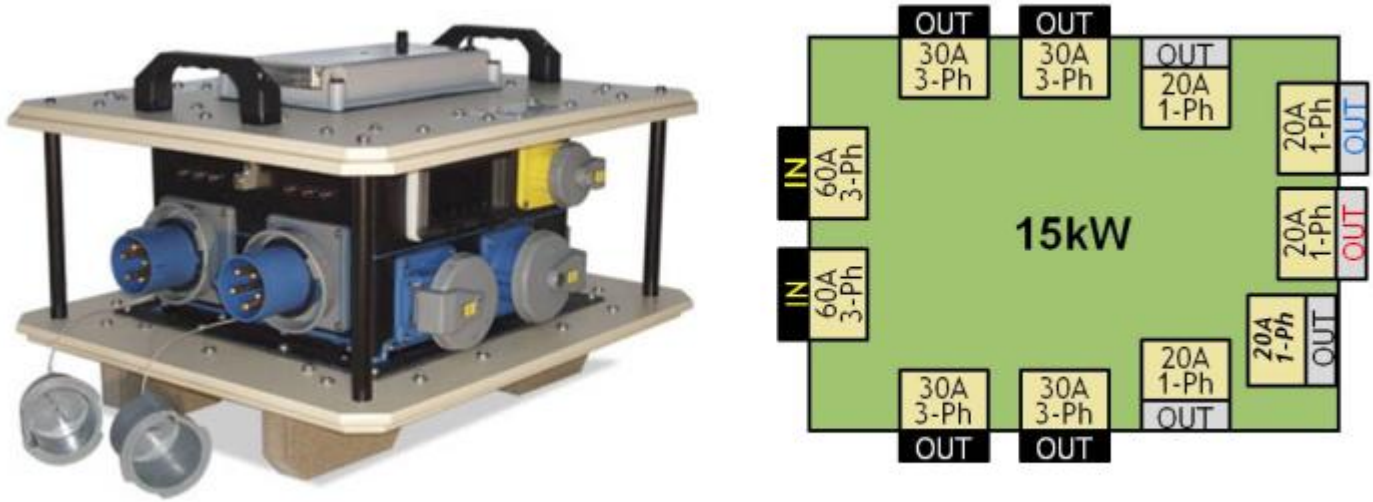

FIGURE B- 16 15kW PDB Configuration

Source: https://assist.dla.mil -- Downloaded: 2016-12-11T08:30Z
Check the source to verify that this is the current version before use.

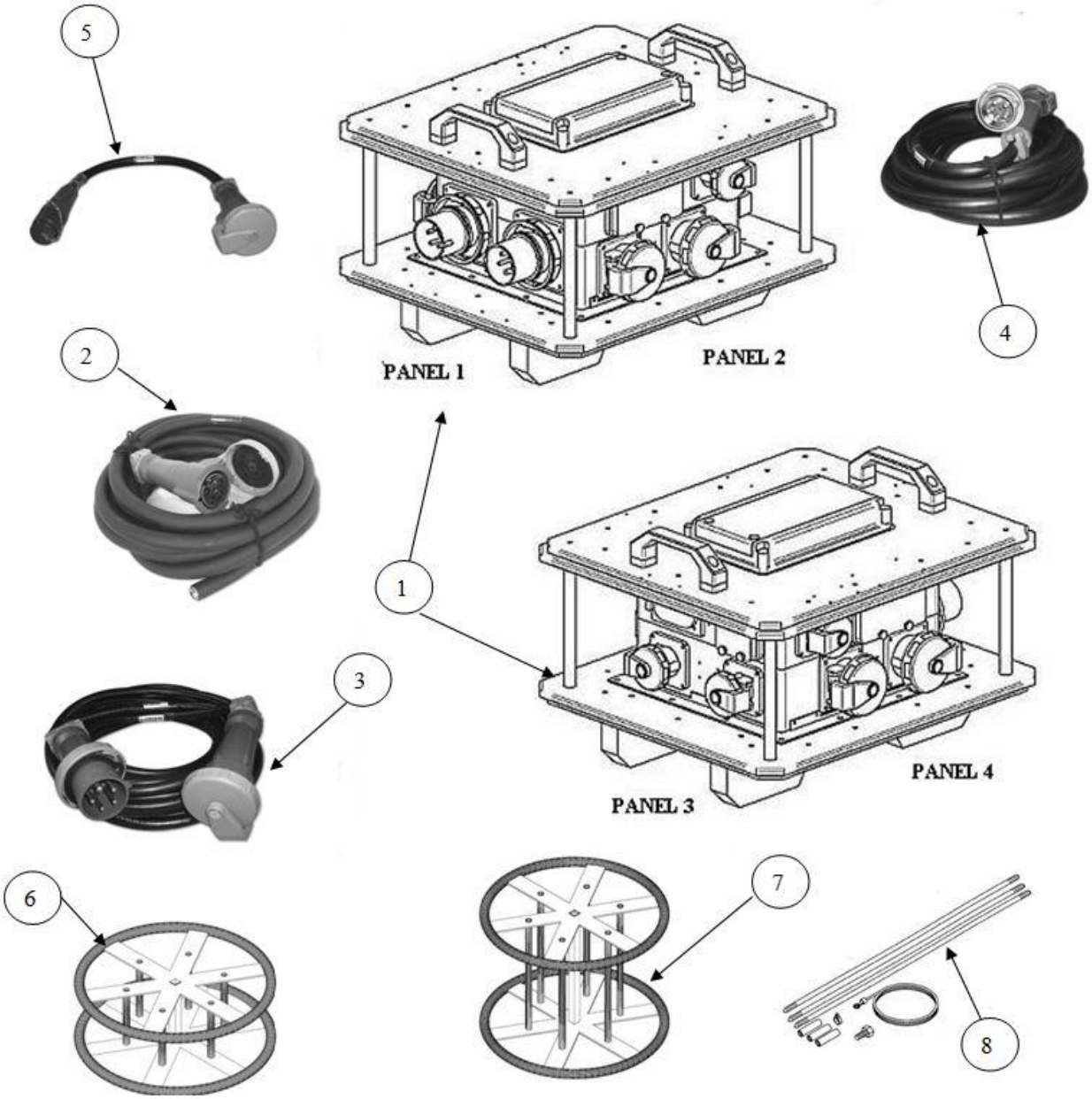

FIND NO.	COMPONENT	QTY
1	MEPDIS-R 15 kW PDB	1
2	Cable Assembly, Power, Electrical: 50 ft, 60A input cable, set #1, pigtail 15kW	2
3	Cable Assembly, Power , Electrical: 50 ft, 30A cable jump, set #3, 15kW-5kW	2
4	Cable Assembly, Power, Electrical: 50 ft, 60A, cable jump, set #4, 30kW-15kW	1
5	Cable Assembly, Power, Electrical: 3 ft, 60A, adapter cable, set #9, 15kW	1
6	Reel, Cable, Small: 11 in. wide, O.D. 30 in.	1
7	Reel, Cable, Large: 22 in. wide, O.D. 30 in.	1
8	Rod, Ground: stl; 3 sect; 0.625-11 IA in. UNC thd; 6 AWG; 72 in. ground wire; 0.625 in. dia. 108.000 in. oa lg	1

FIGURE B- 17 MEPDIS-R 15kW PDB Components

Source: https://assist.dla.mil -- Downloaded: 2016-12-11T08:30Z
Check the source to verify that this is the current version before use.

B.2.1.10 MEPDIS-R – 30kW PDB. The Marine supported 30kW model Power Distribution Box (PDB) can be directly fed from either a 300 kW MEPDIS-R Box, 100 kW MEPDIS-R Box or up to two 100 Amp 3 Phase external power sources, independently or simultaneously. The outputs can be used to feed up to four 60 Amp 3 Phase 15kW MEPDIS-R Boxes; up to two 30 Amp 3 Phase 5kW boxes; up to two 20 Amp 3 Phase outlets; up to two 20 Amp Single Phase 5 kW MEPDIS-R Outdoor Cord sets or "Y" Cords, and has one 20Amp GFCI Duplex Receptacle.

Identification Data		
MODEL	DB100MA-P22QS3	
DESCRIPTION	**Input**	**Output**
	Circuit Breaker Protection 2 each: 5 wire, 3-phase, 100 amp Pin & Sleeve	Circuit Breaker Protection 4 each: 5 wire, 3-ph, 60amp Pin & Sleeve 2 each: 5 wire, 3-ph, 30amp Pin & Sleeve 2 each: 5 wire, 3-ph, 20amp Pin & Sleeve 2 each: 3 wire, 1-ph, 20amp Pin & Sleeve 1 each: 3 wire, 1-ph, 120 VAC 20A GFCI Duplex Receptacle
CIRCUIT BREAKERS		
NSN	**TAMCN**	**ID**
6110-01-532-1809	B0030	11184A
Physical Characteristics		
DIMENSION: LWD in inches	**SHIP CUBE (ft^3)**	**WEIGHT (lbs)**
36 X 26 X 19	10	174

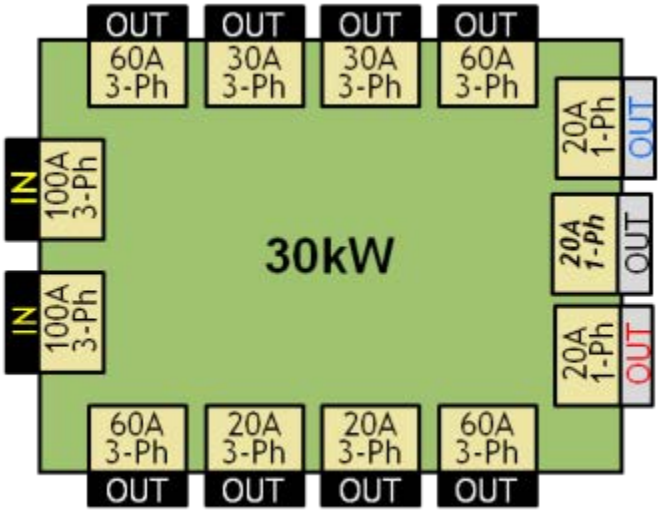

FIGURE B- 18 30kW PDB Configuration

Source: https://assist.dla.mil -- Downloaded: 2016-12-11T08:30Z
Check the source to verify that this is the current version before use.

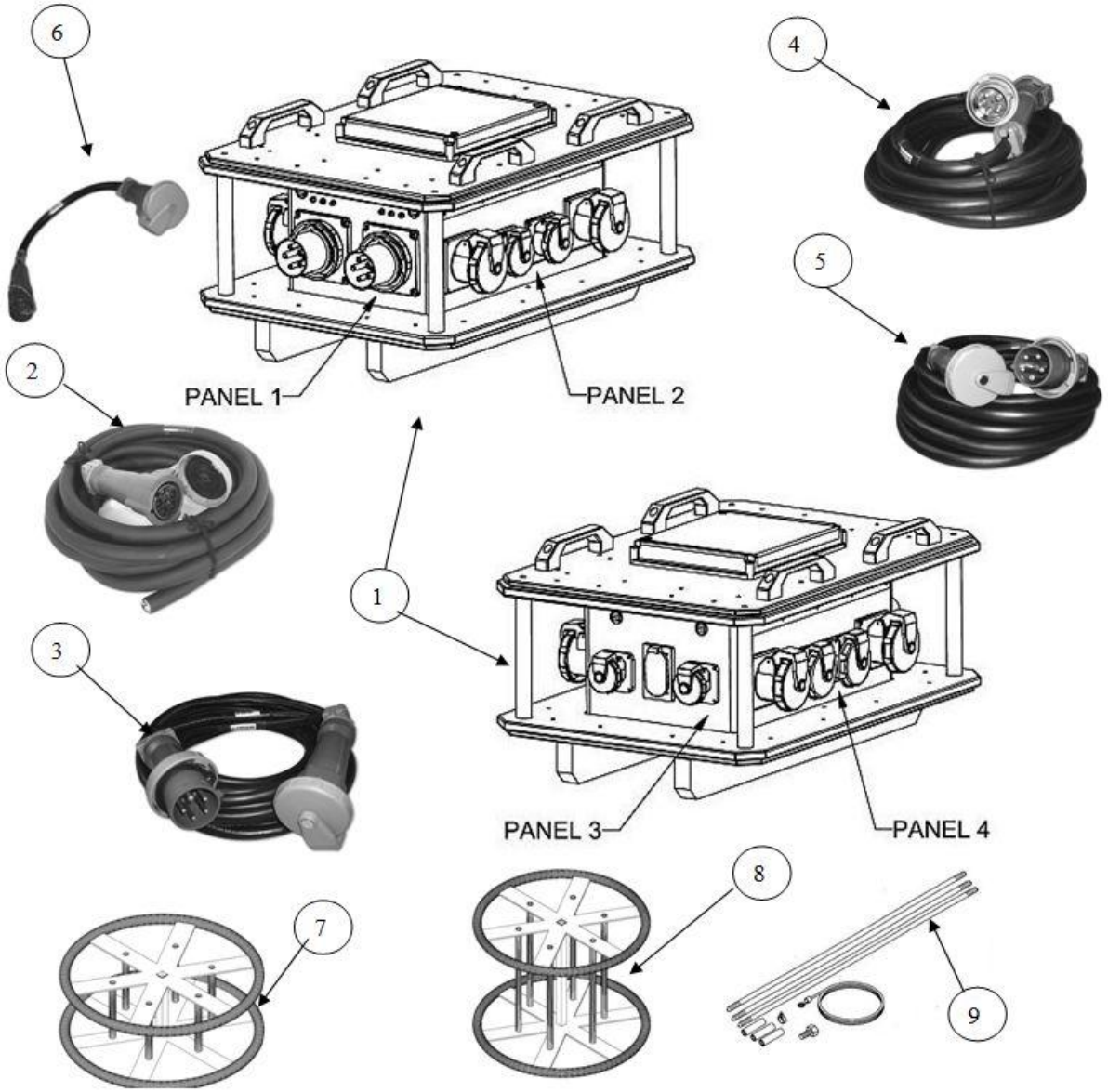

FIND NO.	COMPONENT	QTY
1	MEPDIS-R 30kW PDB	1
2	Cable Assembly, Power, Electrical: 50 ft, 100A input cable, pigtail, set #2, 30kW	2
3	Cable Assembly, Power, Electrical: 50 ft, 30A cable jump, set #3, 15kW-5kW;	2
4	Cable Assembly, Power, Electrical: 50 ft, 60A, cable jump, set #4, 30kW-15kW	4
5	Cable Assembly, Power, Electrical: 50 ft, 100A, cable jump, set #5, 100kW-30kW	1
6	Cable Assembly, Power, Electrical: 3 ft, 60Aadapter cable, set #10,30kW	1
7	Reel, Cable, Small: 11 in. wide, O.D. 30 in.	1
8	Reel, Cable, Large: 22 in. wide, O.D. 30 in.	2
9	Rod, Ground: stl; 3 sect; 0.625-11 IA in. UNC thd; 6 AWG; 72 in. ground wire; 0.625 in. dia. 108.000 in. oa lg	1

FIGURE B- 19 MEPDIS-R 30kW PDB Components

Source: https://assist.dla.mil -- Downloaded: 2016-12-11T08:30Z
Check the source to verify that this is the current version before use.

B.2.1.11 MEPDIS-R – 100 kW PDB. The Marine supported 100kW Power Distribution Box (PDB) can be directly fed from 300kW MEPDIS-R Box, or directly from up to two synchronized, 400 Amp 3-Phase external power sources, either independently or simultaneously. The 100kW MEPDIS-R Box will feed one 200 Amp output; up to four 100 Amp 3-phase 30kW MEPDIS-R Boxes; up to two 60 Amp 3-phase 15kW MEPDIS-R Boxes; up to two 30 Amp 3-Phase 5kW MEPDIS-R Boxes; up to two 3 phase 20 Amp Outlets; up to (2) 20 Amp single phase 5kW MEPDIS-R Outdoor Cord sets or "Y" Cords, and has one 20Amp GFCI Duplex Receptacle.

Identification Data		
MODEL	DB350MA-P2WAS3	
DESCRIPTION	**Input**	**Output**
	Cam Type, 5 wire 2 each: 400 amp switch	Circuit Breaker Protection 1 each: Cam Type, 200Amp, 5 wire connection 4 each: 5 wire, 3-ph, 100amp Pin & Sleeve 2 each: 5 wire, 3-ph, 60 amp Pin & Sleeve 2 each: 5 wire, 3-ph, 30 amp Pin & Sleeve 2 each: 5 wire, 3-ph, 20 amp Pin & Sleeve 2 each: 3 wire, 1-ph, 20 amp Pin & Sleeve 1 each: 3 wire, 1-ph, 120 VAC 20A GFCI Duplex Receptacle
CIRCUIT BREAKERS		
NSN	**TAMCN**	**ID**
6110-01-532-1835	B0031	11182A
Physical Characteristics		
DIMENSION: LWD in inches	**SHIP CUBE (ft^3)**	**WEIGHT (lbs)**
36 X 26 X 32	17.23	306

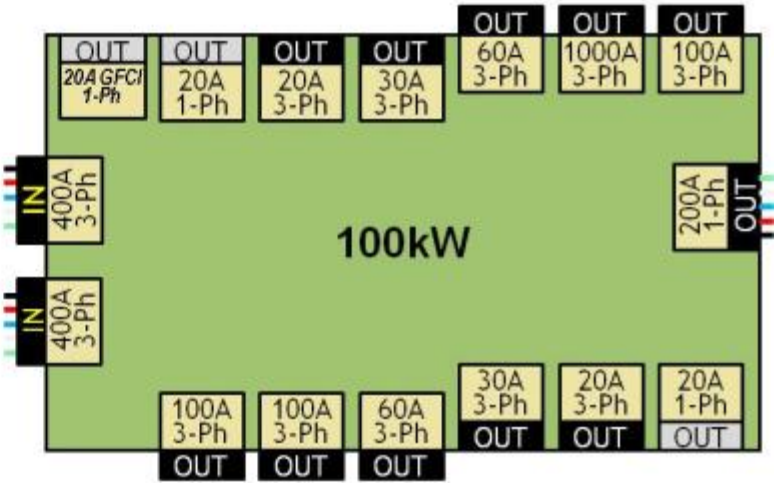

FIGURE B- 20 100 PDB Configuration

Source: https://assist.dla.mil -- Downloaded: 2016-12-11T08:30Z
Check the source to verify that this is the current version before use.

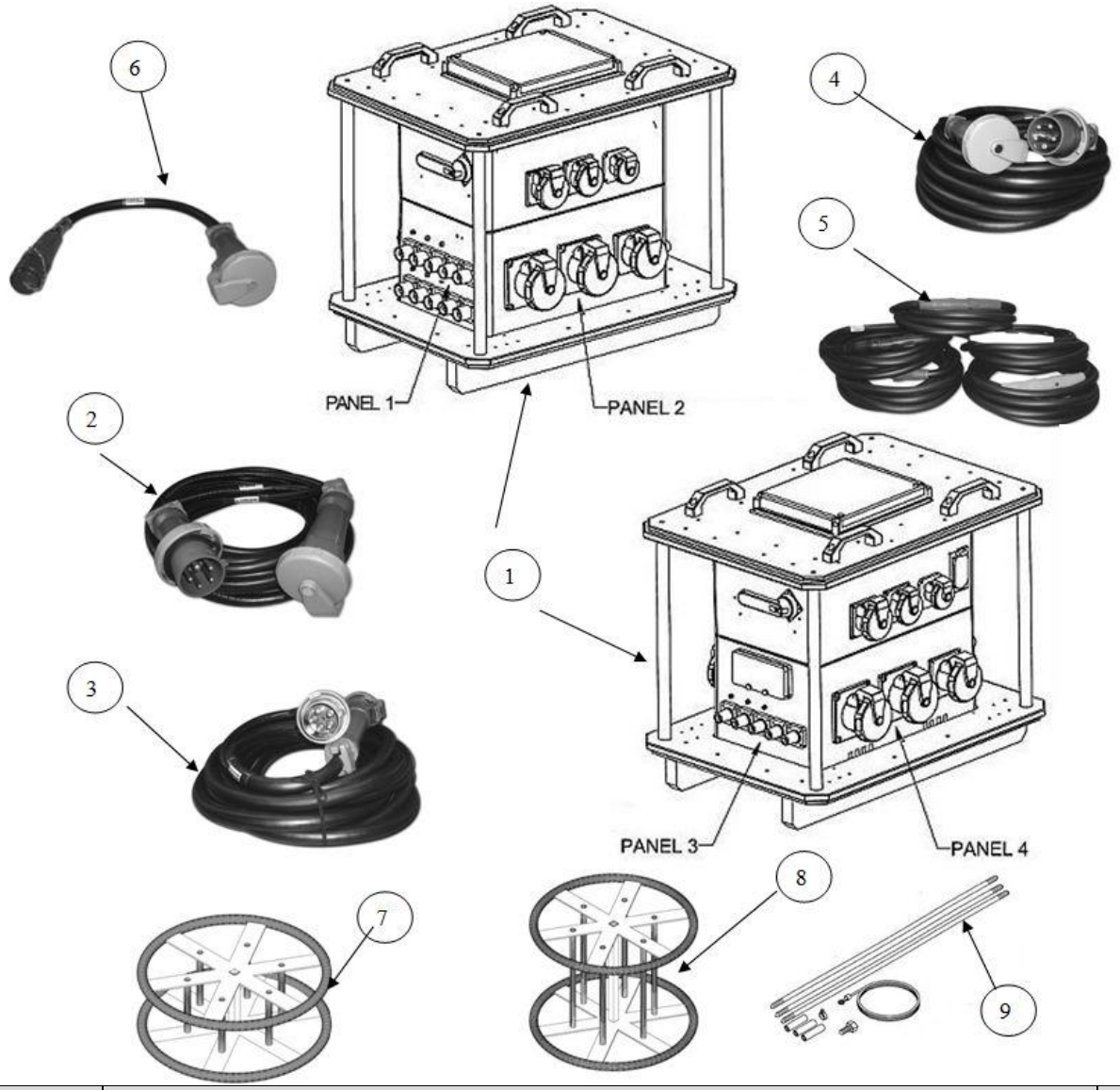

FIND NO.	COMPONENT	QTY
1	MEPDIS-R 100 kW PBD	1
2	Cable Assembly, Power, Electrical: 50 ft, 30A cable jump, set #3, 15kW-5kW	1
3	Cable Assembly, Power, Electrical: 50 ft, 60A, cable jump, set #4, 30kW-15kW;	2
4	Cable Assembly, Power, Electrical: 50 ft, 100A, cable jump, set #5, 100kW-30kW;	4
5	Cable Assembly, Power, Electrical: 25 ft, 400A, feeder cable, set #6, (5) cables per	3
6	Cable Assembly, Power, Electrical: 3 ft, 100A, adapter cable, set #8, 100kW;	1
7	Reel, Cable, Small: 11 in. wide, O.D. 30 in.	3
8	Reel, Cable, Large: 22 in. wide, O.D. 30 in.	3
9	Rod, Ground: stl; 3 sect; 0.625-11 IA in. UNC thd; 6 AWG; 72 in. ground wire; 0.625 in. dia. 108.000 in. oa lg	1

FIGURE B- 21 MEPDIS-R 100 kW PDB Components

Source: https://assist.dla.mil -- Downloaded: 2016-12-11T08:30Z
Check the source to verify that this is the current version before use.

B.2.1.12 MEPDIS-R – 300 kW PDB. The Marine supported 300 kW Power Distribution Box (PDB) can be directly fed by 3 synchronized, 400 Amp, 3 phase, external power sources, either independently or simultaneously. The 400 Amp, 3 phase outputs can be used to feed additional equipment, or up to two 100kW MEPDIS-R Boxes and/or two 100 Amp 3 Phase 30kW MEPDIS-R boxes, and has a 20Amp GFCI Duplex Receptacle.

Identification Data		
MODEL	DB350MA-P2WQS	
DESCRIPTION	**Input**	**Output**
	Cam Type, 5 wire 3 each: 400 amp switch	Circuit Breaker Protection 2 each: Cam Type,400Amp, 5 wire connection 2 each: 5 wire, 3-ph,100amp Pin & Sleeve 1 each: 3 wire, 1-phase, 120 VAC 20A GFCI Duplex Receptacle
CIRCUIT BREAKERS		
NSN	**TAMCN**	**ID**
6110-01-532-1776	B0032	11187A
Physical Characteristics		
DIMENSION: LWD in inches	**SHIP CUBE (ft^3)**	**WEIGHT (lbs)**
36 X 26 X 32	17.23	320

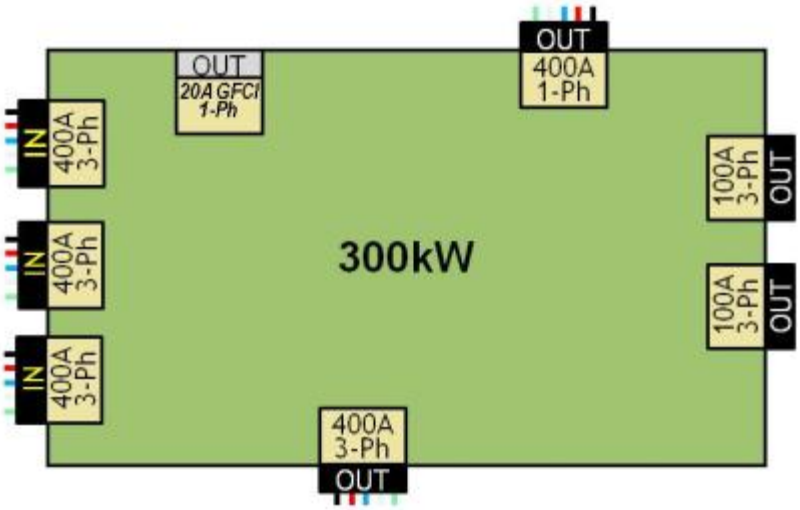

FIGURE B- 22 300kW PDB Configuration

Source: https://assist.dla.mil -- Downloaded: 2016-12-11T08:30Z
Check the source to verify that this is the current version before use.

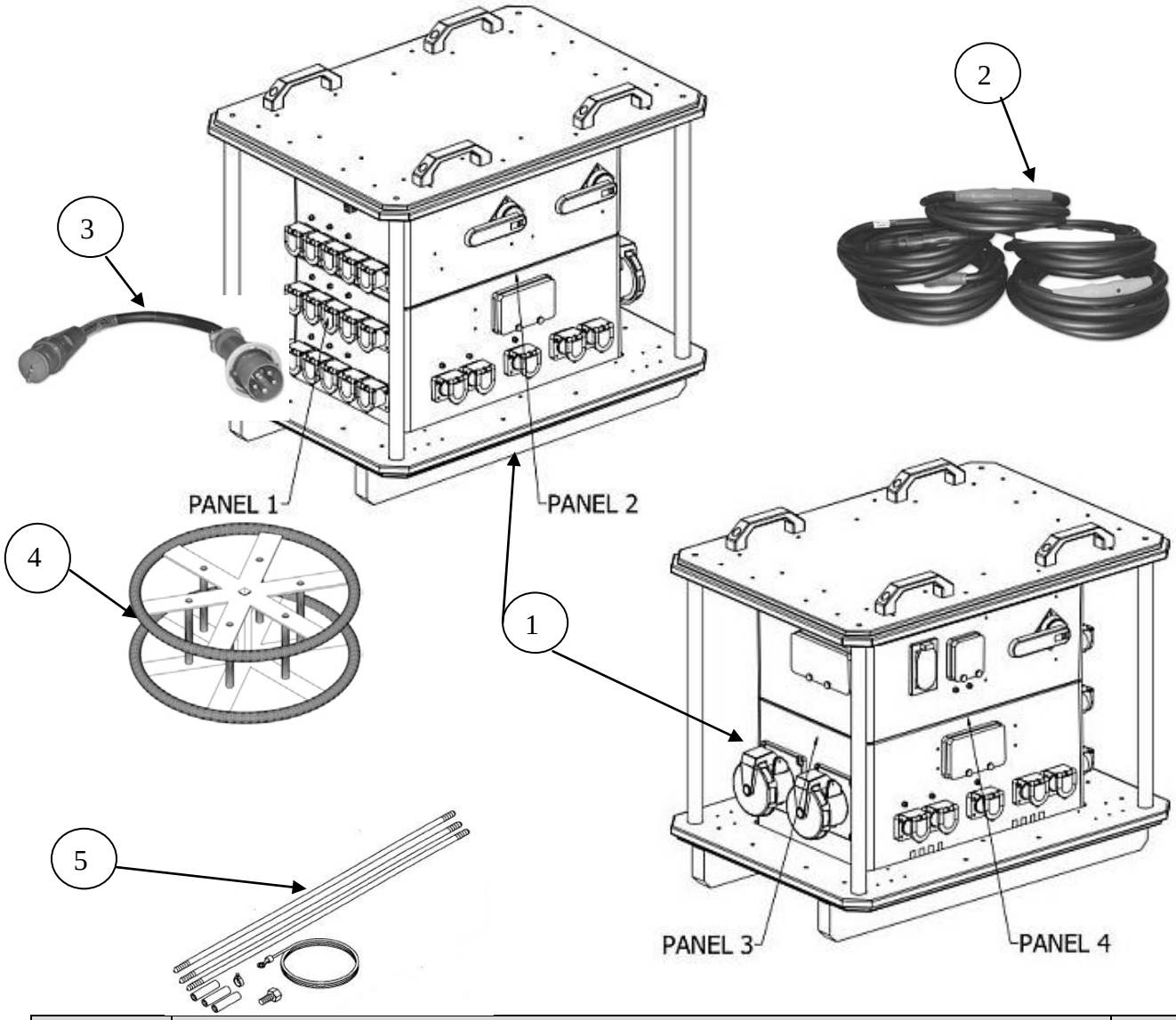

FIND NO.	COMPONENT	QTY
1	MEPDIS-R 300 kW PDB	1
2	Cable Assembly, Power, Electrical: 25 ft, 400A, feeder cable, set #6, (5) cables per set;	4
3	Cable Assembly, Power, Electrical: 3 Ft, 100a, Adapter Cable, Set #8, 100kw	1
4	Reel, Cable, Small: 11 in. wide, O.D. 30 in.	4
5	Rod, Ground: stl; 3 sect; 0.625-11 IA in. UNC thd; 6 AWG; 72 in. ground wire; 0.625 in. dia. 108.000 in. oa lg	1

FIGURE B- 23 MEPDIS-R 300kW PDB Components

Source: https://assist.dla.mil -- Downloaded: 2016-12-11T08:30Z
Check the source to verify that this is the current version before use.

B.2.1.13 Assembly 30208. The Navy supported 150kW, 15kVA, Power Distribution Panel Unit is used to provide a network of multiple 480 volt, 225 to 100 amps, 3 phase loads, 208Y/120 volt, 100 amps, 3 and 1 phase loads and the power source is supplied from a remote generator or facility power. The system is capable of one 480 volts, 225 amp power input and five 480 volt power outputs; one power outlet to a 15 kW transformer and twenty 208Y/120 volt power outputs. An alternate power input is available for 208Y/120 volt assembly using 208Y/120 volt, 100 amp power input and eighteen 208Y/120 volt power outputs. The alternate power source will be used when 480 volt power source is not available or the transformer is inoperative. The 150 kW, 15 kVA is used in conjunction with various ground support equipment.

Identification Data		
MODEL	LOM-150 kW-15	
DESCRIPTION	**Input**	**Output**
	Circuit Breaker Protection One 480 volts, 3 phases, 225 amps Alternate: One 208Y/120 volts, 3 phase, 100 amps	Five 480 volts, 3 phase, one power outlet to a 15kVA transformer and twenty 208Y/120 volts
CIRCUIT BREAKERS	480 Volt Circuits and 20Y/120 Volt	
NSN	**Part No**	**COG**
6110-00-186-2542	N29183/4A	2CA
Physical Characteristics		
DIMENSION: LWD in inches	**CUBE (ft^3)**	**WEIGHT (lbs)**
43 X 31.5 X 30.5	63.89	1,143.06

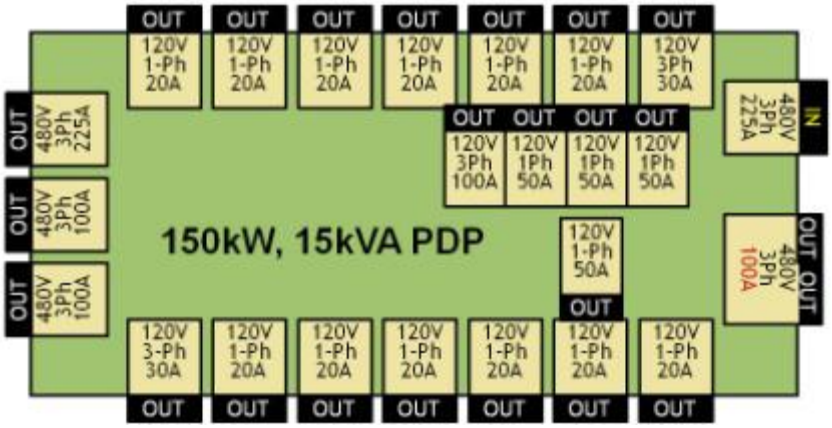

FIGURE B- 24 The 150kW, 15kVA, Power Distribution Panel Configuration

Source: https://assist.dla.mil -- Downloaded: 2016-12-11T08:30Z
Check the source to verify that this is the current version before use.

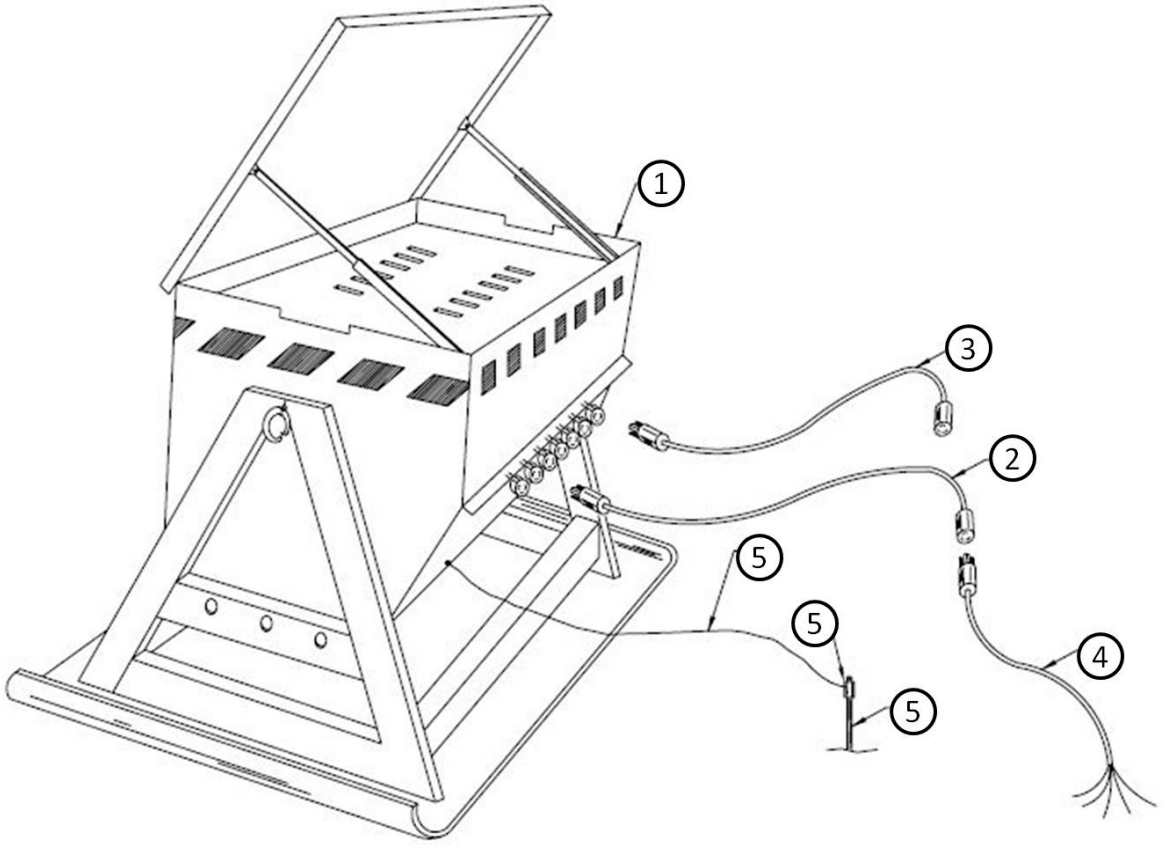

FIND NO.	COMPONENT	QTY
1	PANEL POWER DISTRIBUTION PANEL 15 kVA TRANSFORMER 480/208/120V	1
2	CABLE ASSEMBLY 10-5 SO 50FT NEMA L21-30P L21-30R	4
3	CABLE ASSEMBLY 10-3 SO 50FT NEMA L5-20P L5-20R	14
4	CABLE ASSEMBLY 10-5 SO 15FT NEMA L21-30P WP	2
5	ROD GROUND 3-3FT SECTIONS 5/8N DIA STEEL CLAD	1

FIGURE B- 25 Assembly 30208 Components

Source: https://assist.dla.mil -- Downloaded: 2016-12-11T08:30Z
Check the source to verify that this is the current version before use.

B.2.1.14 Assembly 30209. The Navy supported 150kW, 30kVA Power Distribution Panel u nit is used to provide a network of multiple 480 volt, 225 t o 100 AMPS, 3-phase loads, 208Y/120 volt , 100 to 20 AMPS, 3 and 1 phase loads and the power source is supplied from a remote generator or facility power. The system is capable of one 480 volt, 225 amp power input and 5 (480 volt) power outputs; one power outlet to a 30KVA transformer and 16 (208Y/120 volt) power outputs. An alternate power input is available for 208Y/120 volt assembly using 208Y/120 volt, 100 AMP power input and 15 (208Y/120 volt) power outputs. The alternate power source will be used when 480 volt power source is not available or the transformer is inoperative. The 150 kW, 30 kVA is used in conjunction with various ground support equipment.

Identification Data		
MODEL	L0M-120kW	
DESCRIPTION	**Input**	**Output**
	One 480 volts, 3 phase, 225 amps Alternate: 1 208Y/120 volts, 3 phase, 100 amps	One 480 volts, 3 phase, 225amps Four 480 volts, 3 phase, 100amps One 480 volts, 3 phase, 40 or ; Two 208Y/120 volts, 3 phase, 100 amps Two 208Y/120 volts, 1 phase, 50 amps Eight 208Y/120 volts, 1 phase, 20 amps (GFCI) Four 208Y/120 volts, 3 phase, 30 amps
CIRCUIT BREAKERS		
NSN	**Part No**	**COG**
6110-00-186-2537		2CA
Physical Characteristics		
DIMENSION: LWD in inches	**CUBE (ft^3)**	**WEIGHT (lbs)**
40.25 X 32 X 30.5	63.31	**1415.06**

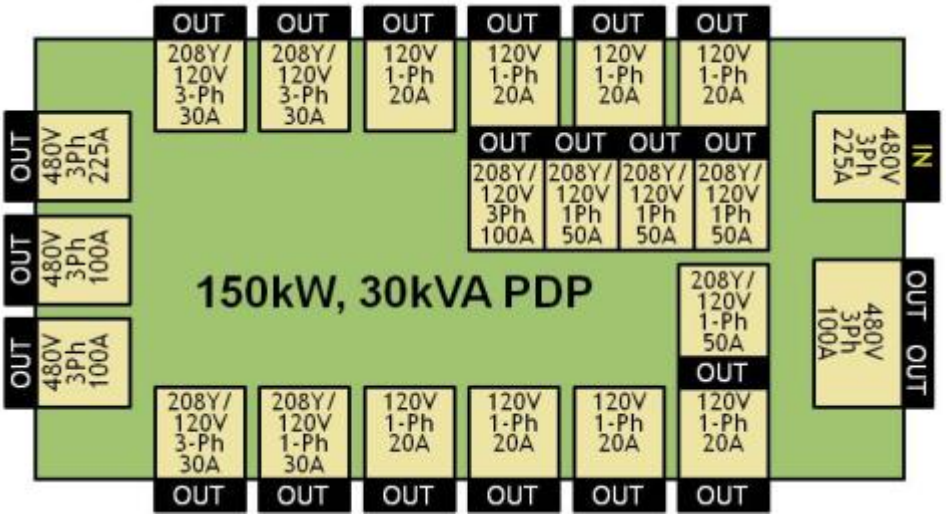

FIGURE B- 26 150KW, 30KVA Power Distribution Panel

Source: https://assist.dla.mil -- Downloaded: 2016-12-11T08:30Z
Check the source to verify that this is the current version before use.

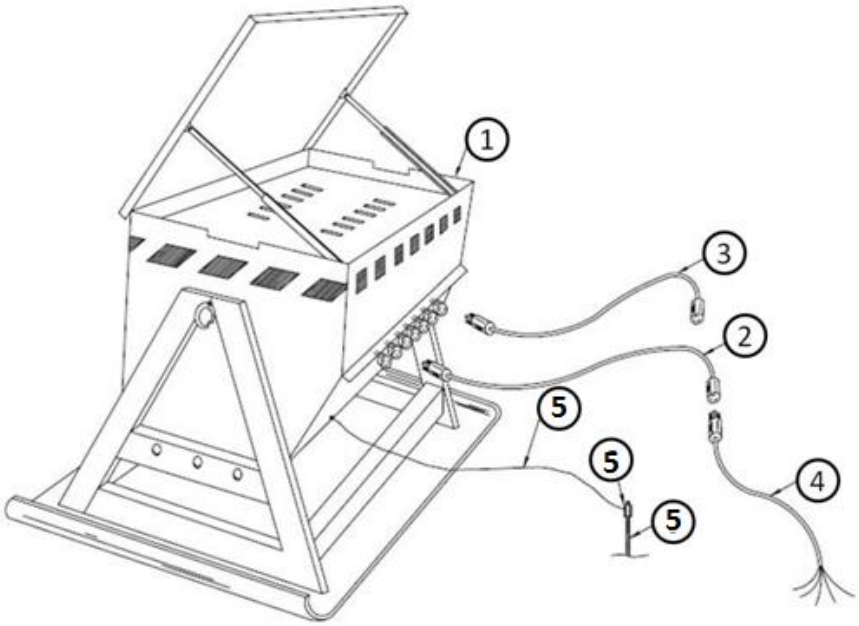

FIND NO.	COMPONENT	QTY
1	PANEL POWER DIST PORT 150KW 30KVA TRANSFORMER	1
2	CABLE ASSEMBLY 10-5 SO 50FT NEMA L21-30P L21-30R	8
3	CABLE ASSEMBLY 10-3 SO 50FT NEMA L5-20P L5-20R	8
4	CABLE ASSEMBLY 10-5 SO 10FT NEMA L21-30P L21-30P WP	4
5	ROD GROUND 3-3FT SECTIONS 5/8N DIA STEEL CLAD	1

FIGURE B- 27 Assembly 30209 Components

Source: https://assist.dla.mil -- Downloaded: 2016-12-11T08:30Z
Check the source to verify that this is the current version before use.

B.2.1.15 Assembly 30030. The Navy supported PDU is a lightweight, portable and free-standing power distribution unit capable of distributing single and 3-phase power. The PDU consists of a box and frame assembly, a circuit assembly, one 200 Amp 3-phase input connector, four side panels with receptacles and input power indicator lights. Packaged as a kit, the unit comes with a set of bare end tails provided for connection between power source and the power distribution box.

Identification Data		
MODEL	DB200MP-PQ66S3	
DESCRIPTION	**Input**	**Output**
	3 phase 200A 208Y/120V Single Pole CAM Type 16 Series, 5-Wire	One 1 phase 20A 120V GFCI Straight Blade Duplex Two 3 phase 60A 208Y/120V Commercially Equivalent MIL Class L Two 3 phase 100A 208Y/120V Commercially Equivalent MIL Class L Two 3 phase 60A 208Y/120V Commercially Equivalent MIL Class L
CIRCUIT BREAKERS		
NSN	**Part No**	**COG**
6110-01-554-7406		9ED
Physical Characteristics		
DIMENSION: LWD in inches	**CUBE (ft^3)**	**WEIGHT (lbs)**
36 X 26 X 18.5	10.29	**185**

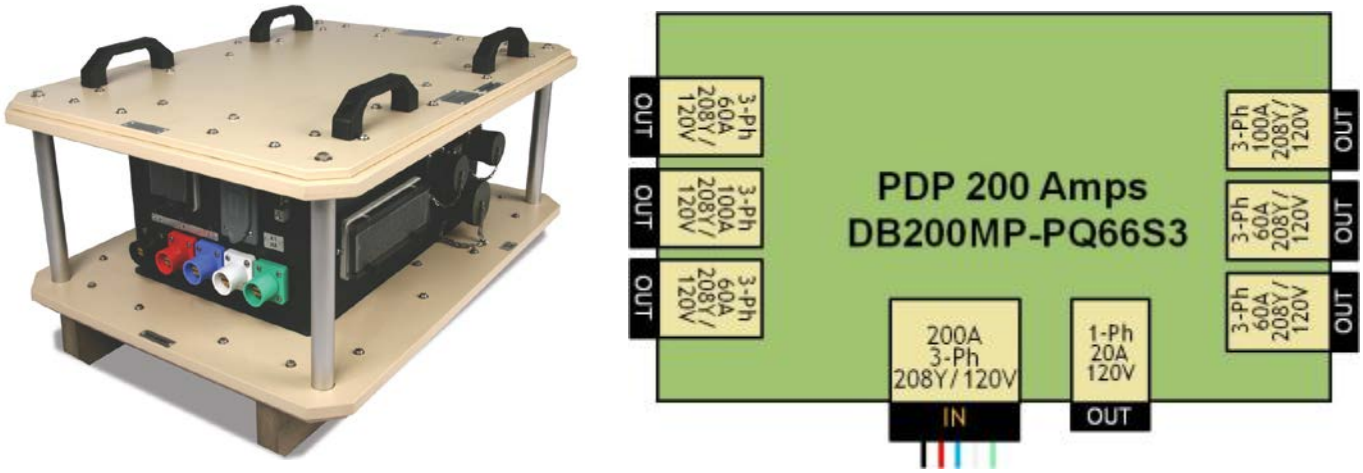

FIGURE B- 28 200 Amps Power Distribution Unit

Source: https://assist.dla.mil -- Downloaded: 2016-12-11T08:30Z
Check the source to verify that this is the current version before use.

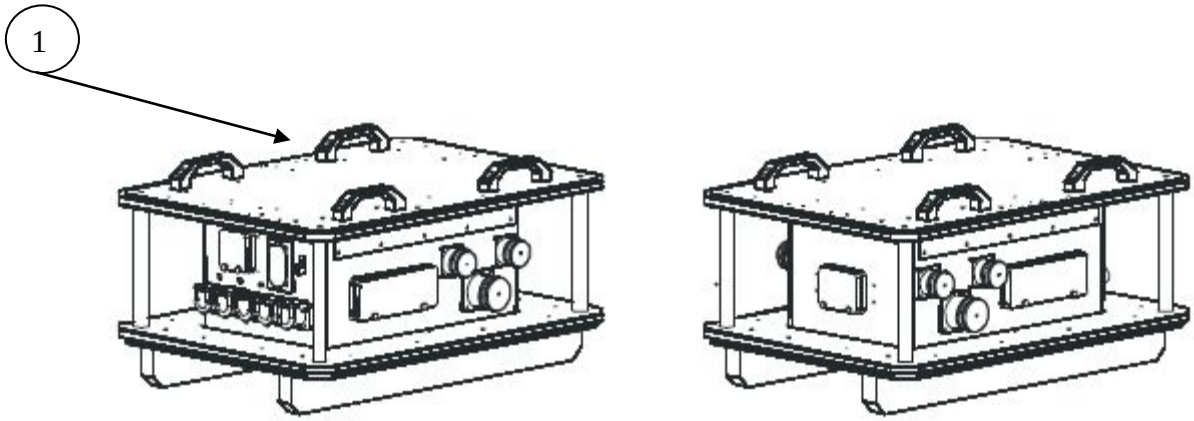

FIND NO.	COMPONENT	QTY
1	PANEL POWER DISTRIBUTION 200 AMP LEX	1

FIGURE B- 29 Assembly 30030 Components

Source: https://assist.dla.mil -- Downloaded: 2016-12-11T08:30Z
Check the source to verify that this is the current version before use.

B.2.1.16 Assembly 30133. The Navy supported Distribution Center Portable 208Y/120V 60 Amp (15KW) PDP is designed to accept power at 120/208 VAC, 3-phase, utilizing 60-amp Power connectors. Power is then distributed at 120/208 VAC 3-phase and 120 VAC 1-phase. The PDPs are used to provide power to equipment requiring 120/208 VAC electrical power.

Identification Data		
MODEL	LOM-010KW	
DESCRIPTION	**Input**	**Output**
	One 208Y/120 volts, 3 phase, 60 amps	One 208Y/120 volts, 3 phase, 60 amps Twelve 120volts, 1 phase, 20 amps
CIRCUIT BREAKERS		
NSN	**Part No**	**COG**
6110-01-236-3829	PDS-PDP-15	
Physical Characteristics		
DIMENSION: LWD in inches	**CUBE (ft^3)**	**WEIGHT (lbs)**
29 X 18 X 18	7.12	**132.04**

FIND NO.	COMPONENT	QTY
1	PANEL POWER DIST 208/120V 60A (15kW) GFCI	1
2	CONNECTOR PLUG ELECTRICAL 60A 3PH	8
3	CLAMP GND ROD ADJ	1
4	ROD GROUND 3-3FT SECTIONS 5/8N DIA STEEL CLAD	1

FIGURE B- 30 Distribution Center Portable 208Y/120V 60 Amp (15kW)

Source: https://assist.dla.mil -- Downloaded: 2016-12-11T08:30Z
Check the source to verify that this is the current version before use.

B.2.1.17 Assembly 30211. The Navy supported 10 kW portable power distribution panel unit is used to provide a network .of mu1tiple 120/208-volt, 3-phase loads and 120-volt, 1-phase loads from a remote generator or facility power. The system is capable of 1 separate power input and 7 power outputs. The l0 kW is used in conjunction with various ground support equipment.

Identification Data		
MODEL	LOM-010KW	
DESCRIPTION	**Input**	**Output**
	One 208Y/120 volts, 3 phase, 30 amps	One 208Y/120 volts, 3 phase, 30 amps Four 120volts, 1 phase, 20 amps (GFCI) Two 208Y/120 volts, 3 phase, 20 amps One 208Y/120 volts, 3 phase, 30 amps
CIRCUIT BREAKERS		
NSN	**Part No**	**COG**
6110-00-205-1637		2CA
Physical Characteristics		
DIMENSION: LWD in inches	**CUBE (ft^3)**	**WEIGHT (lbs)**
16.4 X 16 X 16	20.45	**287**

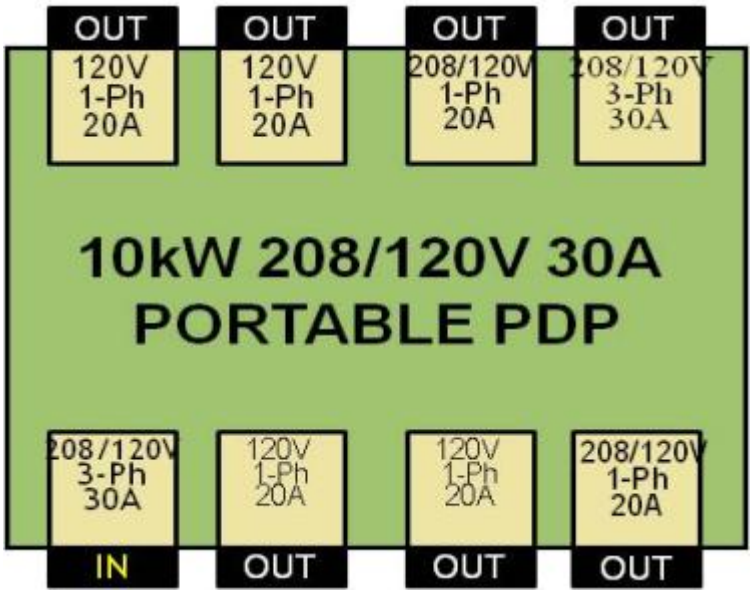

FIGURE B- 31 10KW, 208/120V 30A Portable Power Distribution Panel

Source: https://assist.dla.mil -- Downloaded: 2016-12-11T08:30Z
Check the source to verify that this is the current version before use.

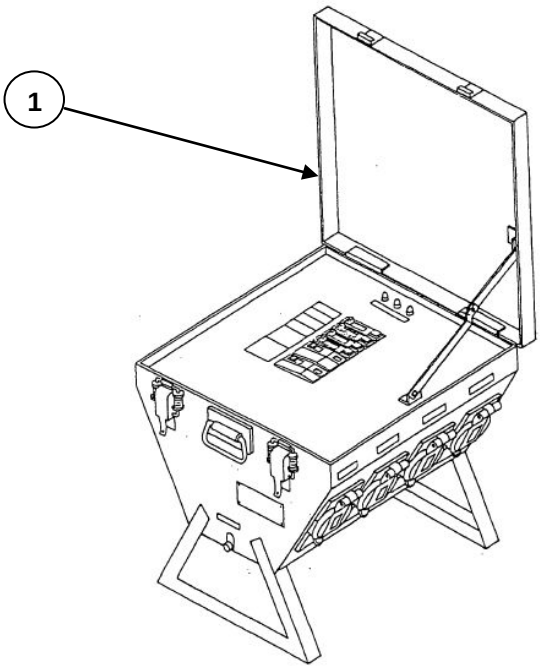

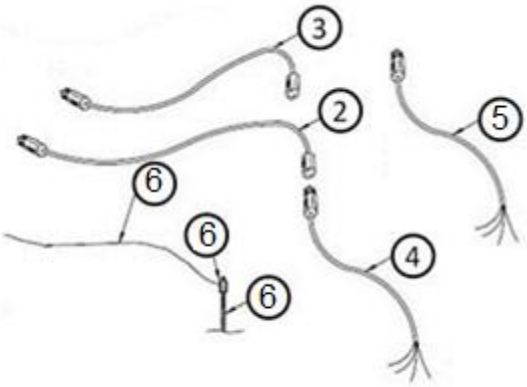

FIND NO.	COMPONENT	QTY
1	PANEL POWER DIST 208Y/120V 60A (10KW) GFCI	1
2	CABLE ASSEMBLY 10-5 SO 50FT NEMA L21-30P L21-30R	2
3	CABLE ASSEMBLY 10-3 SO 2FT NEMA L5-20P 2EA 5-15R	4
4	CABLE ASSEMBLY 10-4 SO 50FT NEMA L14-20P L14-20R	4
5	CABLE ASSEMBLY 10-4 SO 15FT NEMA L14-20P WP	2
6	ROD GROUND 3-3FT SECTIONS 5/8N DIA STEEL CLAD	1

FIGURE B- 32 Assembly 30211 Components

Source: https://assist.dla.mil -- Downloaded: 2016-12-11T08:30Z
Check the source to verify that this is the current version before use.

B.2.1.18 Assembly 32600. The Navy supported 120kW Power Distribution Panel unit is used to provide a network of multiple 480 volt, 100 to 20 AMPS, 3and 1-phase loads, or 208 volt, 100 to 20 AMPS, 3 and 1 phase loads and the power source is supplied from a remote generator or facility power. The system is capable of one to four 480 volt or 208 volt, 100 amp power input and 8 (480 volt or 208 volt) , or 2 (277 or 120 volt) power outputs. The 120 kW is used in conjunction with various ground support equipment.

Identification Data		
MODEL	L0M-120kW	
DESCRIPTION	**Input**	**Output**
	Circuit Breaker Protection Four 480 volts, 3 phases, 100 amps or Four 208 volts, 3 phase, 100 amps	Two 480 or 208 volts, 3 phase, 100 amps Four 480 or 208 volts, 3 phase, 50 amps Two 480 or 208 volts, 3 phase, 30 amps Two 277 or 120 volts, 1 phase, 20 amps
CIRCUIT BREAKERS		
NSN	**Part No**	**COG**
6110-00-186-6623	M29183/7A	2CA
Physical Characteristics		
DIMENSION: LWD in inches	**CUBE (ft^3)**	**WEIGHT (lbs)**
25.62 X 27.75 X 33.5	23.93	**887.8**

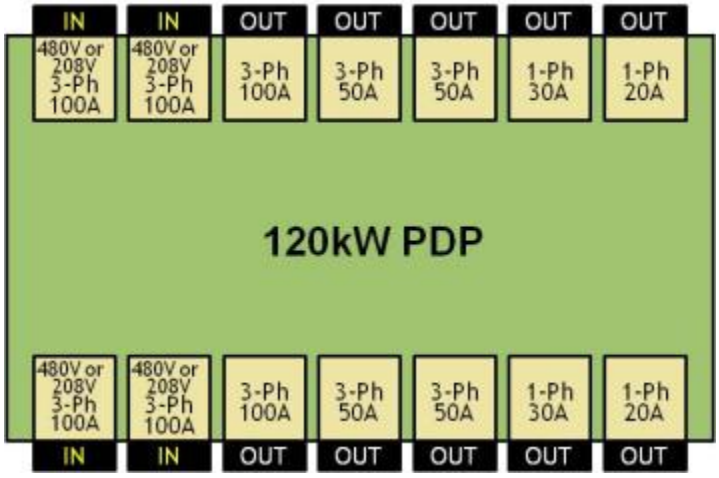

FIGURE B- 33 120kW Power Distribution Panel

Source: https://assist.dla.mil -- Downloaded: 2016-12-11T08:30Z
Check the source to verify that this is the current version before use.

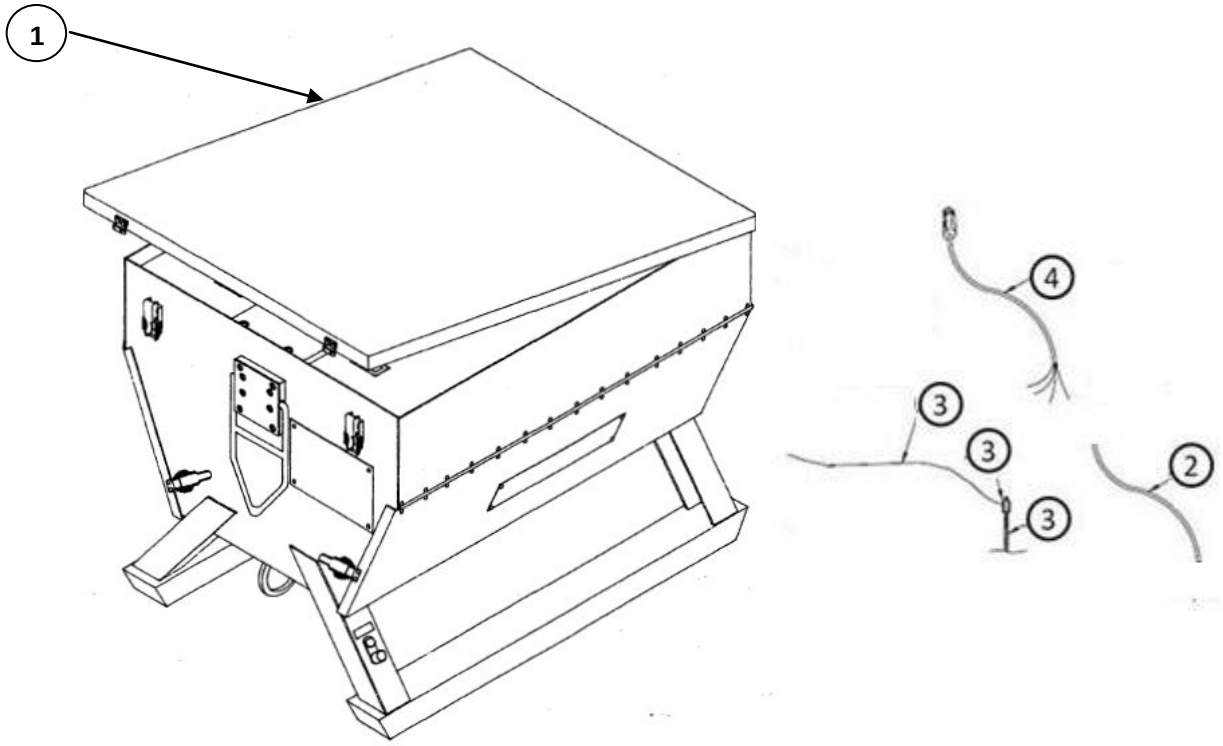

FIND NO.	COMPONENT	QTY
1	PANELBOARD WP 480V 3P4W 400A	1
2	WIRE ELEC 4/0 AWG EXPED	600 Ft
3	ROD GROUND 3-3FT SECTIONS 5/8N DIA STEEL CLAD	1
4	BOX CONN ELECTRIC 2 SCREW 2N F/PORTABLE CABLE	4

FIGURE B- 34 Assembly 32600 Components

Source: https://assist.dla.mil -- Downloaded: 2016-12-11T08:30Z
Check the source to verify that this is the current version before use.

B.2.1.19 PPD Box 200 Amp (60kW). The Navy supported 60 kW PDP is designed to accept power at 120/208 VAC, 3-phase, utilizing 60 amp Power connectors. Power is then distributed at 120/208 VAC 3-phase and 120 VAC 1-phase. The PDPs are used to provide power to equipment requiring 120/208 VAC electrical power.

Identification Data		
MODEL	LOM-010KW	
DESCRIPTION	**Input**	**Output**
	One 208Y/120 volts, 3 phase, 60 amps	One 208Y/120 volts, 3 phase, 60 amps Four 120 volts, 1 phase, 20 amps One 120 volts, 1 phase, 15 amp
CIRCUIT BREAKERS	Thermal magnetic type	
NSN	**Part No**	**COG**
6110-01-236-4637	PDSYS-PDP-60	
Physical Characteristics		
DIMENSION: LWD in inches	**CUBE (ft^3)**	**WEIGHT (lbs)**
23 x 18 x 18	25.93	**200**

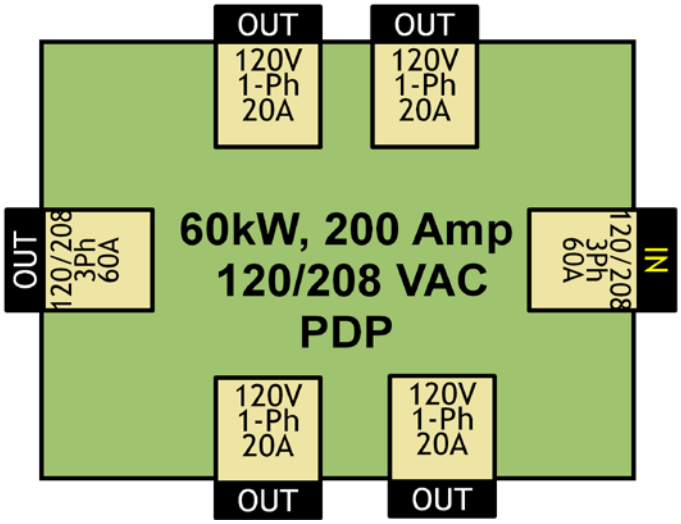

FIGURE B- 35 Distribution Center Portable 208Y/120V 200 Amp (60kW)

Source: https://assist.dla.mil -- Downloaded: 2016-12-11T08:30Z
Check the source to verify that this is the current version before use.

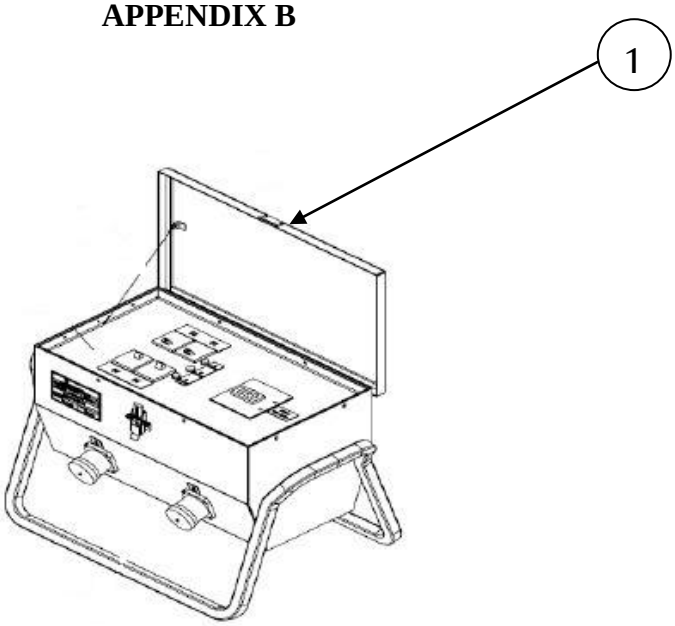

FIND NO.	COMPONENT	QTY
1	PANEL POWER DISTRIBUTION 60KW 200 AMPS 60 HZ 240Y/208V, 3 PHASE, FOR PD86MMIK8605	1

FIGURE B- 36 Panel Power Distr 60 kW Components

Source: https://assist.dla.mil -- Downloaded: 2016-12-11T08:30Z
Check the source to verify that this is the current version before use.

APPENDIX C

LEGACY MEPGS AND ASSOCIATED POWER UNITS AND POWER PLANTS NO LONGER PROCURABLE

C.1 SCOPE

C.1.1 Scope. This Appendix identifies various legacy MEPGS and associated equipment that are no longer procurable, see TABLE C- I below. Data contained in this Appendix is for historical reference.

TABLE C- I Guide to the Characteristic Data

SIZE	FREQ	ITEM DESCRIPTION	MODEL NO.	NSN	FIGURE	PAGE
3 kW	60 Hz	TQG, Power Plant	AN/MJQ-42	6115-01-322-8583	FIGURE C- 1	118
		TQG, Power Plant	AN/MJQ-43	6115-01-322-8582	FIGURE C- 2	119
5 kW	60 Hz	TQG	MEP-802A	6115-01-274-7387	FIGURE C- 3	121
	400 Hz	TQG	MEP-812A	6115-01-284-7391	FIGURE C- 3	121
	60 Hz	TQG, Power Unit	PU-797A	6115-01-413-3820	FIGURE C- 4	122
	60 Hz	TQG, Power Plant	AN/MJQ-35A	6115-01-414-9697	FIGURE C- 5	123
	60 Hz	TQG, Power Plant	AN/MJQ-36	6115-01-313-4215	FIGURE C- 6	124
	60 Hz	TQG, Power Unit	PU-797	6115-01-332-0741	FIGURE C- 7	126
	60 Hz	TQG, Power Plant	AN/MJQ-35	6115-01-313-4216	FIGURE C- 8	127
	28VDC	APU, DED	MEP-952	6115-01-317-2139	FIGURE C- 9	129
10 kW	60 Hz	TQG	MEP-803A	6115-01-275-5061	FIGURE C- 10	131
	400 Hz	TQG	MEP-813A	6115-01-274-7392	FIGURE C- 10	131
	60 Hz	TQG, Power Unit	PU-798A	6115-01-413-3818	FIGURE C- 11	132
	400 Hz	TQG, Power Unit	PU-799A	6115-01-413-3819	FIGURE C- 12	133
	60 Hz	TQG, Power Plant	AN/MJQ-37	6115-01-299-6035	FIGURE C- 13	134
	400 Hz	TQG, Power Plant	AN/MJQ-38	6115-01-313-4214	FIGURE C- 14	135
	60 Hz	TQG, Power Unit	PU-798	6115-01-319-9032	FIGURE C- 15	136
	400 Hz	TQG, Power Unit	PU-799	6115-01-313-4283	FIGURE C- 16	137
	60 Hz	APU, DED	MEP-903A	6115-01-431-3062	FIGURE C- 17	139
15 kW	50/60 Hz	TQG	MEP-804B	6115-01-530-1458	FIGURE C- 18	141
	400 Hz	TQG	MEP-814B	6115-01-529-9494	FIGURE C- 18	141
	400 Hz	TQG, Power Unit	PU-800A	6115-01-565-0929	FIGURE C- 19	142
	50/60 Hz	TQG, Power Unit	PU-801B	6115-01-565-0874	FIGURE C- 20	143
	50/60 Hz	TQG, Power Unit	PU-802A	6115-01-565-1576	FIGURE C- 21	144
	400 Hz	TQG, Power Plant	AN/MJQ-39B	6115-01-565-0701	FIGURE C- 22	145
	50/60 Hz	TQG, Power Plant	AN/MJQ-48B	6115-01-565-0691	FIGURE C- 23	146
	50/60 Hz	TQG	MEP-804A	6115-01-274-7388	FIGURE C- 24	149
	400 Hz	TQG	MEP-814A	6115-01-274-7393	FIGURE C- 24	149
	400 Hz	TQG, Power Unit	PU-800	6115-01-317-2137	FIGURE C- 25	150
	50/60 Hz	TQG, Power Unit	PU-801	6115-01-319-9033	FIGURE C- 26	151
	50/60 Hz	TQG, Power Unit	PU-801A	6115-01-413-3821	FIGURE C- 27	152
	50/60 Hz	TQG, Power Unit	PU-802	6115-01-317-2138	FIGURE C- 28	153
	400 Hz	TQG, Power Plant	AN/MJQ-39	6115-01-299-6034	FIGURE C- 29	154
	50/60 Hz	TQG, Power Plant	AN/MJQ-48	6115-01-540-8433	FIGURE C- 30	155
	50/60 Hz	TQG, Power Plant	AN/MJQ-48A	6115-01-540-9465	FIGURE C- 31	156

Source: https://assist.dla.mil -- Downloaded: 2016-12-11T08:30Z
Check the source to verify that this is the current version before use.

SIZE	FREQ	ITEM DESCRIPTION	MODEL NO.	NSN	FIGURE	PAGE
30 kW	50/60 Hz	TQG	MEP-805B	6115-01-461-9335	FIGURE C- 32	158
	400 Hz	TQG	MEP-815B	6115-01-462-0290	FIGURE C- 32	158
	50/60 Hz	TQG, Power Unit	PU-803B	6115-01-470-6376	FIGURE C- 33	159
	400 Hz	TQG, Power Unit	PU-804B	6115-01-471-1507	FIGURE C- 34	160
	50/60 Hz	TQG, Power Plant	AN/MJQ-40B	6115-01-474-3783	FIGURE C- 35	161
	50/60 Hz	TQG	MEP-805A	6115-01-274-7389	FIGURE C- 36	164
	400 Hz	TQG	MEP-815A	6115-01-274-7394	FIGURE C- 36	164
	50/60 Hz	TQG, Power Unit, DED	PU-803	6115-01-317-2136	FIGURE C- 37	165
	400 Hz	TQG, Power Unit, DED	PU-804	6115-01-317-2135	FIGURE C- 38	166
	50/60 Hz	TQG, Power Plant, DED	AN/MJQ-40	6115-01-299-6033	FIGURE C- 39	167
60 kW	50/60 Hz	TQG	MEP-806B	6115-01-462-0291	FIGURE C- 40	169
	400 Hz	TQG	MEP-816B	6115-01-462-0292	FIGURE C- 40	169
	50/60 Hz	TQG, Power Unit	PU-805B	6115-01-471-1508	FIGURE C- 41	170
	400 Hz	TQG, Power Unit	PU-806B	6115-01-471-1506	FIGURE C- 42	171
	50/60 Hz	TQG, Power Plant	AN/MJQ-41B	6115-01-474-3776	FIGURE C- 43	172
	50/60 Hz	TQG, Power Plant (Air Force)	AN/MJQ-1612	6115-01-349-1536	FIGURE C- 44	173
	400 Hz	TQG, Power Plant (Air Force)	AN/MJQ-1632	6115-01-346-0157	FIGURE C- 45	174
	50/60 Hz	TQG, Gen Set, DED	MEP-806A	6115-01-274-7390	FIGURE C- 46	177
	400 Hz	TQG, Gen Set, DED	MEP-816A	6115-01-274-7395	FIGURE C- 46	177
	50/60 Hz	TQG, Power Unit, DED	PU-805	6115-01-317-2134	FIGURE C- 47	178
	400 Hz	TQG, Power Unit, DED	PU-806	6115-01-317-2133	FIGURE C- 48	179
	50/60 Hz	TQG, Power Plant, DED	AN/MJQ-41	6115-01-303-7896	FIGURE C- 49	180
	50/60 Hz	TQG, Power Plant, DED	AN/MJQ-1612	6115-01-349-1536	FIGURE C- 50	181
	400Hz	TQG, Power Plant, DED	AN/MJQ-1610		FIGURE C- 51	182
	50/60 Hz	DPGDS, Power Unit	MEP-810A	6115-01-486-4033	FIGURE C- 52	184
840 kW	50/60 Hz	DPGDS, Power Unit	MEP-810B	6115-01-486-4032	FIGURE C- 53	186
DISE		200 amp/phase Feeder Sys -3 Phase-	M200	6150-01-208-9755	FIGURE C- 54	187
		100 amp/phase Feeder Sys -3 Phase-	M100	6150-01-208-9754	FIGURE C- 55	188
		40 amp/phase Dist Sys - 3 Phase-	M40	6150-01-208-9753	FIGURE C- 56	189
		60 amp Dist Sys - 1 Phase-	M60	6150-01-208-9752	FIGURE C- 57	190
		Electrical Kit, Utility Receptacle	M46	6150-01-208-9751	FIGURE C- 58	191

C.2 DEFINITIONS

C.2.1 Auxiliary Power Unit (APU). An Auxiliary Power Unit (APU) is a power source consisting of a self-contained engine and generator, including remote controls, capable of producing electrical power when connected to its host's source of fuel and starting power.

C.2.2 Aircraft Ground Support Unit. An Aircraft Ground Support Unit (AGSU) is an aviation ground support generator set used to start and service aircraft.

C.2.3 Distribution Illumination Systems, Electrical (DISE). DISE is a set of man portable, reliable, modular, and quick to assemble standardized electrical distribution system components used with DEPMEDS. The DISE provides power networks which can reduce the number of generator sets needed at a field location.

C.3 DETAILED DESCRIPTIONS

Source: https://assist.dla.mil -- Downloaded: 2016-12-11T08:30Z
Check the source to verify that this is the current version before use.

C.3.1 Detailed Descriptions. Detailed descriptions are contained in the Characteristic Data paragraphs from C.3.1.1 to C.3.1.19.

Source: https://assist.dla.mil -- Downloaded: 2016-12-11T08:30Z
Check the source to verify that this is the current version before use.

C.3.1.1 TQG, 3kW, 60 Hz Mounted on M116A3 Trailer.

Identification Data			
Model	**NSN**	**LIN**	**SSN**
PP-AN/MJQ-42	6115-01-322-8583	P42466	R62700
Physical Characteristics			
Dimension: LWH (in)	**Ship Cube (ft^3)**	**Wet Weight (lbs)**	**Ship Weight (lbs)**
145 x 84 x 76	533	2900	2412
Documentation			
Technical Manual	**Specification**	**Camouflage Drawing**	**Top Assembly**
TM 9-6115-658-13&P	**NOT PROCURABLE** (MIL-P-53132/2)	97403-13226E7477	TA-13229E5720

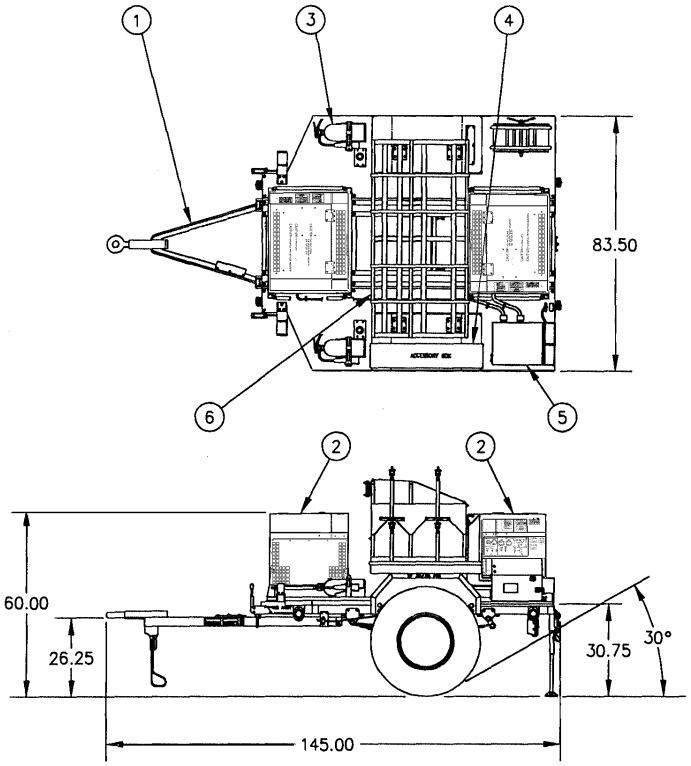

FIND	COMPONENT	QTY	IDENTIFIER
1	Modified 1 ton trailer, M116A3	1	97403-13230E6832
2	MEP-831A	2	6115-01-285-3012
3	Fire extinguisher, 5 lb., A-A-1106	2	4210-00-270-4512
4	Accessory box	1	97403-13229E7946
5	Switch box	1	97403-13230E6950
6	Rack Assembly (includes cable reel)	1	TBD

FIGURE C- 1 PP-AN/MJQ-42 - Tactical Quiet Power Plant 3 kW, 60 Hz

Source: https://assist.dla.mil -- Downloaded: 2016-12-11T08:30Z
Check the source to verify that this is the current version before use.

Identification Data			
Model	**NSN**	**LIN**	**SSN**
PP-AN/MJQ-43	6115-01-322-8582	P42534	R62700
Physical Characteristics			
Dimension: LWH (in)	**Ship Cube (ft^3)**	**Wet Weight (lbs)**	**Ship Weight (lbs)**
135 x 86 x 60	421	2212	2187
Documentation			
Technical Manual	**Specification**	**Camouflage Drawing**	**Top Assembly**
TM 9-6115-658-13&P	**NOT PROCURABLE** (MIL-P-53132/1)	97403-13226E7477	TA-13229E5730

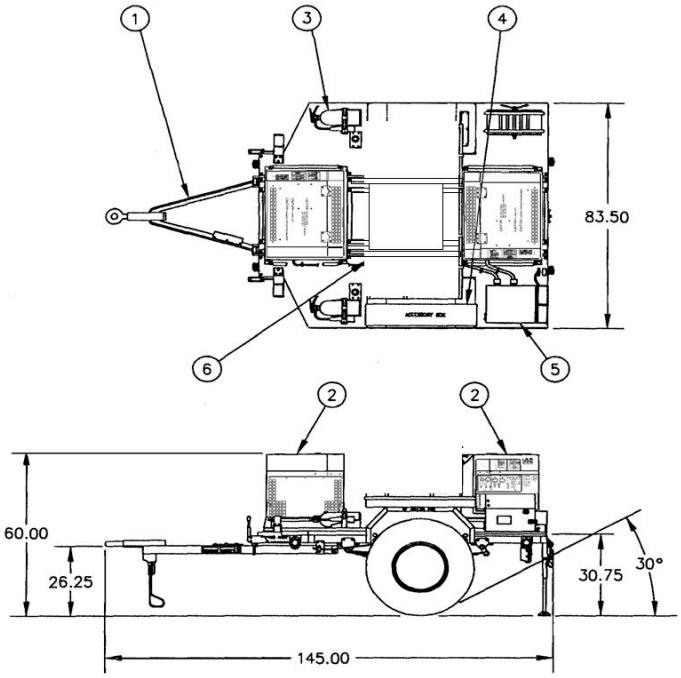

FIND	COMPONENT	QTY	IDENTIFIER
1	Modified 1 ton trailer, M116A3	1	97403-13230E6832
2	MEP-831A	2	6115-01-285-3012
3	Fire extinguisher, 5 lb., A-A-1106	2	4210-00-270-4512
4	Accessory box	1	97403-13229E7946
5	Switch box	1	97403-13230E6950

FIGURE C- 2 PP-AN/MJQ-43 - Tactical Quiet Power Plant, 3 kW, 60 Hz

Source: https://assist.dla.mil -- Downloaded: 2016-12-11T08:30Z
Check the source to verify that this is the current version before use.

C.3.1.2 Tactical Quiet Generator Set, DED, 5 kW.

TABLE C- II Characteristic Data for MEP-802A and MEP-812A

Identification Data		
Model	MEP-802A	MEP-812A
Description	5 kW TQG, 60 Hz, DED, Skid Mtd	5 kW TQG, DED, 400Hz, Skid Mtd
NSN	6115-01-274-7387	6115-01-274-7391
LIN	G11966	G12102
SSN	M53500	M53500
Specification	MIL-DTL-53133/1	MIL-DTL-53133/2
Trailer Configuration	PU- 797A: FIGURE C- 4; AN/MJQ- 35A: FIGURE C- 5; AN/MJQ-36: FIGURE C- 6; PU- 797: FIGURE C- 7; AN/MJQ-35: FIGURE C- 8	None
Physical Characteristic		
Dimensions LWH (in)	51 x 32 x 37	
Ship Cube (ft^3)	35	
Wet Weight (lbs)	888	911
Engine	Onan DN2M Diesel, 2 cylinder/4 stroke, 11.0hp @1800 RPM, 24VDC start, liquid-cooled.	
Instrumentation	Hour meter, voltmeter, frequency, amps (% rated load), oil pressure, fuel, coolant temperature, battery amps, emergency stop, battle short.	
Fuels and Tank Capacity	Diesel DL-1, DL-2; Jet Fuel JP-8 5 Gallon Fuel Tank Capacity	
Performance Characteristic		
Power Rating	5kW, 0.8 pf @ 4000ft/120°F; Derate: 3.5%/1000 ft from 4000 to 8000 ft	
Environmental Capability	-25°F (-50°F with Winterization Kit) to 120°F, rain, humidity, altitude, sand/dust, transportation, cold storage: -60°F, salt spray, fungus, 15° incline.	
Protective Devices	Automatic shut down for overspeed and short circuit. Automatic shut down with emergency bypass for low oil pressure, high temperature, low fuel, and over-voltage. Drop load for under voltage, over current, and reverse power.	
Fuel consumption	0.57 gal/hour @ rated load	0.56 gal/hour @ rated load
Human Factors	MIL-STD-1474	
Noise	70 dBA @ 7 meters (23 feet)	
Reliability (MTBF)	486 hr @ 80% LCL	479 hr @ 80% LCL
Maintenance Ratio	less than 0.05	

Electrical Characteristic			
Basic Design	Drip-proof generator enclosure, fungus & moisture treated, solid state voltage regulator, brushless rotary exciter, solderless connectors, 60Hz: Onan alternator, 4 pole; 400Hz: Onan alternator, 24 pole. Convenience receptacle on 60Hz set.		
EMI	Meets MIL-STD-461C, Part 9 UM04		
EMP	HAEMP IAW MIL-STD-2169		
Motor load	35% dip, 5 sec to 95% init volt		
Voltage Connection	120/240V, 1ph, 3 wire	120V, 1ph, 2 wire	120/208V, 3ph, 4 wire
Voltage adj. Range	228 –252 V	114 – 126 V	205 –220 V
Freq. adj. Range	±3%		

Electrical Performance			
Electric Power Quality		**Frequency**	**AC Voltage**
Regulation		3%	3%
Voltage modulation			2.5%
Short term steady state stability (30 sec)		2% bandwidth	2% bandwidth
Long term steady state stability (4 hr)		3% bandwidth	4% bandwidth
Application of rated load	transient	3% under	20 % dip
	recovery time	3 sec	3 sec
Rejection of rated load	transient	4% over	20% rise
	recovery time	3 sec	3 sec
Max waveform deviation factor			6% (1 phase); 5% (3 phase)
Individual waveform harmonic			3% (1 phase); 2% (3 phase)

Source: https://assist.dla.mil -- Downloaded: 2016-12-11T08:30Z
Check the source to verify that this is the current version before use.

TABLE C- II Characteristic Data for MEP-802A and MEP-812A Continued.

Optional Equipment			
Description	**NSN**	**Technical Bulletin**	**Effect on Dimensions (in)**
Winterization kit	6115-01-476-8973	TB 9-6115-641-13	None (internal)
Technical Manuals			
Army	**Air Force**	**Marine Corps**	**Navy**
TM 9-6115-641-10	TO 35C2-3-456-11	None	
TM 9-6115-641-24	TO 35C2-3-456-12		
TM 9-6115-641-24P	TO 35C2-3-456-14		
TM 9-2815-252-24	TO 38G1-92-2		
TM 9-2815-252-24P	TO 38G1-92-4		
LO 9-6115-641-12			
TB 9-6115-641-24			

MEP-802A or MEP-812A

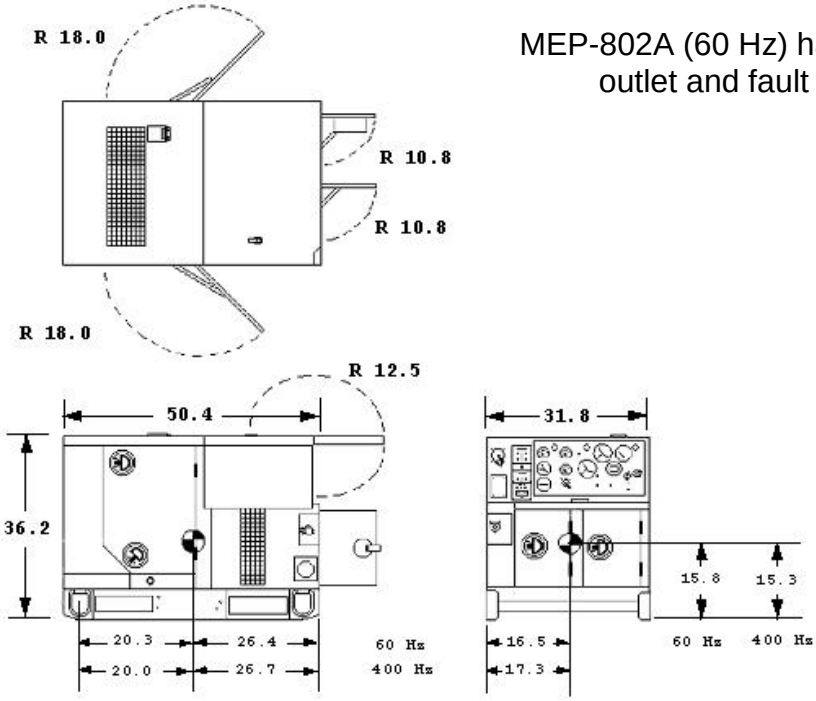

MEP-802A (60 Hz) has convenience outlet and fault protection

FIGURE C- 3 Tactical Quiet Generator Set, 5 kW

Source: https://assist.dla.mil -- Downloaded: 2016-12-11T08:30Z
Check the source to verify that this is the current version before use.

Identification Data			
Model	**NSN**	**LIN**	**SSN**
PU-797A	6115-01-413-3820	G42238	R62700
Physical Characteristic			
Dimension: LWH (in)	**Ship Cube (ft^3)**	**Wet Weight (lbs)**	**Ship Weight (lbs)**
135 x 86 x 72	484	2320	2360
Documentation			
Technical Manual	**Specification**	**Camouflage Drawing**	**Top Assembly**
TM 9-6115-659-13&P		97403-13228E1608	TA-13230E6520

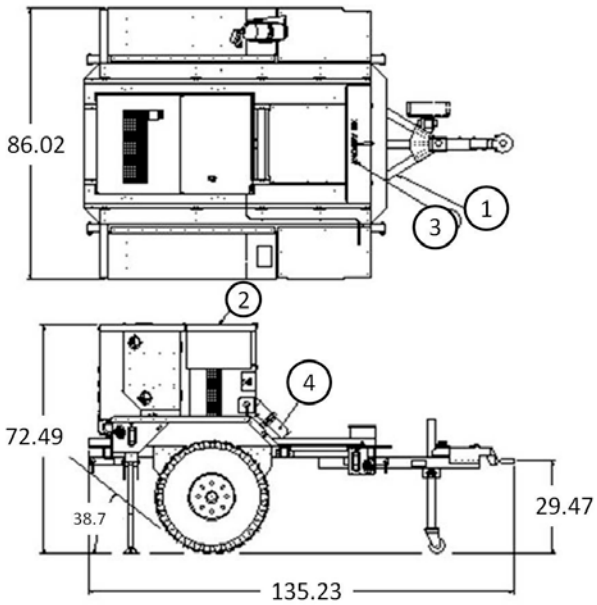

FIND NO.	COMPONENT	QTY	IDENTIFIER
1	Light Tactical Trailer (LTT)	1	97403-13230E6565
2	MEP-802A	1	6115-01-274-7387
3	Accessory box	1	97403-13229E7946
4	Fire extinguisher, 5 lb., A-A-1106	1	4210-00-270-4512

FIGURE C- 4 PU-797A - TQG Power Unit, 5 kW, 60 Hz

Source: https://assist.dla.mil -- Downloaded: 2016-12-11T08:30Z
Check the source to verify that this is the current version before use.

Identification Data			
Model	**NSN**	**LIN**	**SSN**
PP-AN/MJQ-35A	6115-01-414-9697	P28083	R62700
Physical Characteristic			
Dimension: LWH (in)	**Ship Cube (ft^3)**	**Wet Weight (lbs)**	**Ship Weight (lbs)**
135 x 86 x 72	484	3223	3140
Documentation			
Technical Manual	**Specification**	**Camouflage Drawing**	**Top Assembly**
TM 9-6115-659-13&P		97403-13228E1609	TA-13230E6560

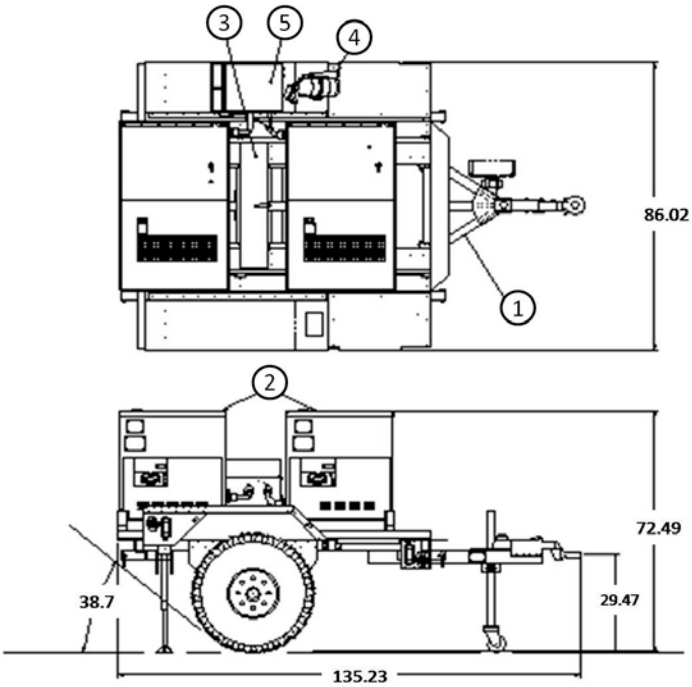

FIND NO.	COMPONENT	QTY	IDENTIFIER
1	Light Tactical Trailer (LTT)	1	97403-13230E6565
2	MEP-802A	2	6115-01-274-7387
3	Accessory box	1	97403-13229E7946
4	Fire extinguisher, 5 lb., A-A-1106	1	4210-00-270-4512
5	Switch box	1	97403-13230E6535

FIGURE C- 5 PP-AN/MJQ-35A - TQG Power Plant, 5 kW, 60 Hz

Source: https://assist.dla.mil -- Downloaded: 2016-12-11T08:30Z
Check the source to verify that this is the current version before use.

Identification Data			
Model	**NSN**	**LIN**	**SSN**
PP-AN/MJQ-36	6115-01-313-4215	P28151	R62700
Physical Characteristic			
Dimension: LWH (in)	**Ship Cube (ft^3)**	**Wet Weight (lbs)**	**Ship Weight (lbs)**
165 x 83 x 71	563	3785	3985
Documentation			
Technical Manual	**Specification**	**Camouflage Drawing**	**Top Assembly**
TM 9-6115-659-13&P	MIL-P-53132/4	97403-13228E1610	TA-13229E5660

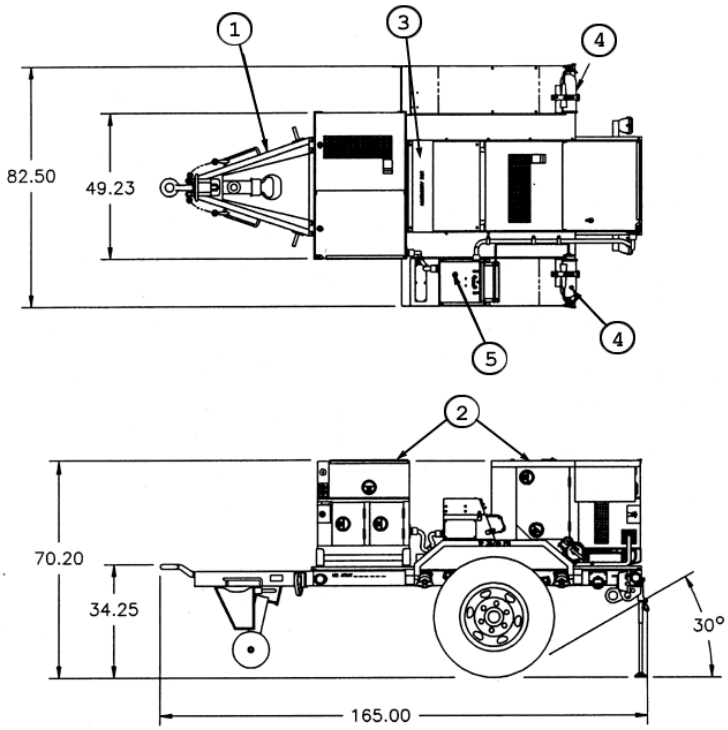

FIND NO.	COMPONENT	QTY	IDENTIFIER
1	1-1/2 Ton modified trailer, M103A3	1	97403-13229E5825
2	MEP-802A	2	6115-01-274-7387
3	Accessory box	1	97403-13229E7946
4	Fire extinguisher, 5 lb., A-A-1106	2	4210-00-270-4512
5	Switch box	1	97403-13230E6535

FIGURE C- 6 PP-AN/MJQ-36 - TQG Power Plant, 5 kW 60 Hz

Source: https://assist.dla.mil -- Downloaded: 2016-12-11T08:30Z
Check the source to verify that this is the current version before use.

This Page Intentionally Left Blank

Source: https://assist.dla.mil -- Downloaded: 2016-12-11T08:30Z
Check the source to verify that this is the current version before use.

C.3.1.3 TQG, 5kW, 60 Hz Mounted on M116A3 Trailer.

Identification Data			
Model	**NSN**	**LIN**	**SSN**
PU-797	6115-01-332-0741	G42238	R62700
Physical Characteristics			
Dimension: LWH (in)	**Ship Cube (ft^3)**	**Wet Weight (lbs)**	**Ship Weight (lbs)**
145 x 84 x 76	535	2320	2360
Documentation			
Technical Manual	**Specification**	**Camouflage Drawing**	**Top Assembly**
TM 9-6115-659-13&P	**NOT PROCURABLE**	97403-13228E1608	TA-13229E5705

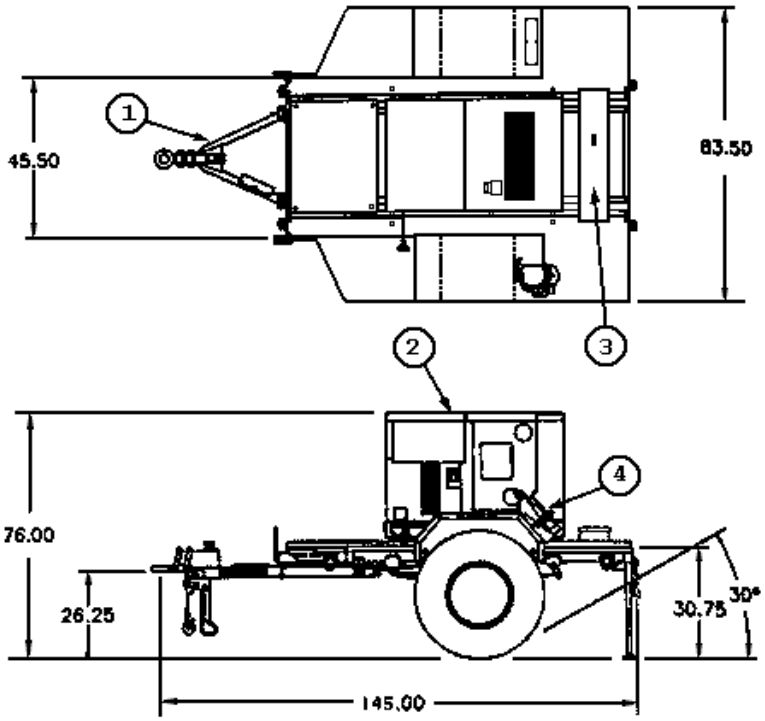

FIND	COMPONENT	QTY	IDENTIFIER
1	Modified 1 ton trailer, M116A3	1	97403-13229E5757
2	MEP-802A	1	6115-01-274-7387
3	Accessory box	1	97403-13229E7946
4	Fire extinguisher, 5 lb., A-A-1106	1	4210-00-270-4512

FIGURE C- 7 PU-797 - TQG Power Unit, 60 Hz

Source: https://assist.dla.mil -- Downloaded: 2016-12-11T08:30Z
Check the source to verify that this is the current version before use.

Identification Data			
Model	**NSN**	**LIN**	**SSN**
PP-AN/MJQ-35	6115-01-313-4216	P28083	R62700
Physical Characteristics			
Dimension: LWH (in)	**Ship Cube (ft^3)**	**Wet Weight (lbs)**	**Ship Weight (lbs)**
154 x 84 x 74	553	3183	3100
Documentation			
Technical Manual	**Specification**	**Camouflage Drawing**	**Top Assembly**
TM 9-6115-659-13&P	**NOT PROCURABLE**	97403-13228E1609	TA-13229E5650

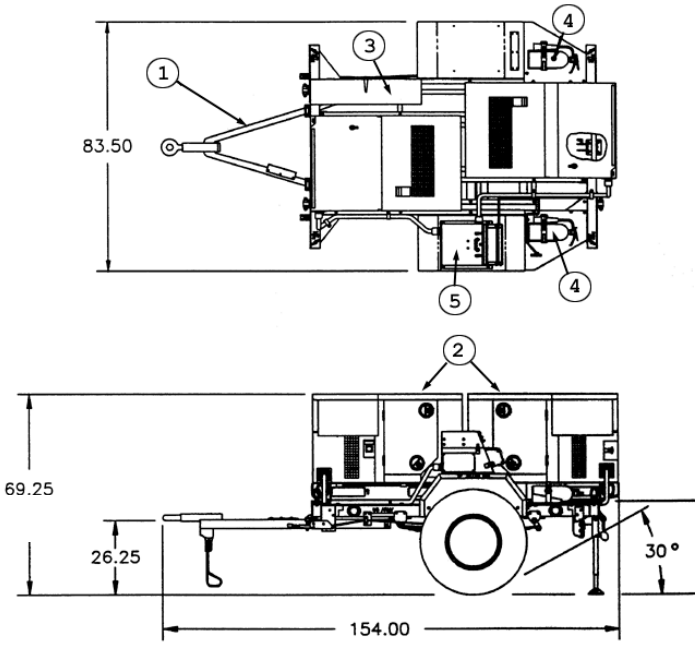

FIND	COMPONENT	QTY	IDENTIFIER
1	Modified 1 ton trailer, M116A3	1	97403-13229E5757
2	MEP-802A	2	6115-01-274-7387
3	Accessory box	1	97403-13229E7946
4	Fire extinguisher, 5 lb., A-A-1106	1	4210-00-270-4512
5	Switch box	1	97403-13230E6535

FIGURE C- 8 PP-AN/MJQ-35 - TQG Power Plant, 5 kW, 60 Hz

Source: https://assist.dla.mil -- Downloaded: 2016-12-11T08:30Z
Check the source to verify that this is the current version before use.

C.3.1.4 Auxiliary Power Unit (APU), DED, 5 kW, 28 VDC. This unit is Army Unique - Not Separately Type Classified.

TABLE C- III Characteristic Data for MEP-952A

Identification Data		
Model		MEP-952A
Description		APU, 5 kW, DED, 28 VDC
NSN		6115-01-317-2139
LIN		
SSN		
Specification		**NOT PROCURABLE**
Configuration		Used with M557 Armored Personnel Carrier and the M1068 Tracked carriers.
Physical Characteristics		
Dimensions LWH (in)		34.5 x 30.5 x 17.0 (housed APU for external mounting)
Ship Cube (ft^3)		11.4
Wet Weight (lbs)		550 (includes housing)
Engine		Farymann - Diesel, 13.2 hp @ 3000 rpm, Air cooled, Electronic governor, Starter: 28 VDC (from NATO slave receptacle) and hand crank (provided). No belts or pulleys.
Instrumentation		Start/prime & run/off switch, emergency stop, volt/current meter (with switch). Local and remote switch for remote operation. Indicators for power on, high eng temp, low oil, preheat on. Lamp test.
Fuels		Diesel DL-1, DL-2 and jet fuel JP-8 and Jet A-1. Provided with quick disconnect fuel line.
Fuel Tank Capacity (Gal)		
Performance Characteristics		
Power Rating		5 kW (180 amps, 28 VDC), from -25°F to 4000 ft/95°F, derate 17% @ 8000 ft/95°F.
Environmental Capability		-25°F to 120°F, rain, humidity, sand/dust, cold storage -65°F, salt spray, fungus. Operable at inclines up to 27°.
Protective Devices		Automatic shut down with emergency bypass for low oil pressure, engine overtemp.
Fuel consumption		0.42 gal/hour
Human Factors		MIL-STD-1474
Noise		70 dBA @ 7 meters (23 feet)
Reliability (MTBF)		
Maintenance Ratio		
Electrical Characteristics		
Basic Design		Uses a Bradley M2/M3, Alternator. Brushless, solid state rectifier, solid state regulator. Capable of 280 amps @ 3000 rpm.
EMI		Suppressed to MIL-STD-461 limits.
EMP		Protected
Motor load		
Voltage Connection		28VDC, NATO slave receptacle.
Voltage adj. Range		23 – 35 V
Freq. adj. Range		
Electrical Performance		
Electric Power Quality		**DC Voltage**
Regulation		4%
Voltage modulation		
Short term steady state stability (30 sec)		2% bandwidth
Long term steady state stability (4 hr)		2% bandwidth
Application of rated load	transient	30%
	recovery time	1 sec
Rejection of rated load	transient	40%
	recovery time	0.5 sec
DC ripple		5.5%

Source: https://assist.dla.mil -- Downloaded: 2016-12-11T08:30Z
Check the source to verify that this is the current version before use.

TABLE C- III Characteristic Data for MEP-952A – Continued.

Optional Equipment			
Description	**NSN**	**Weight (lbs)**	**Effect on Dimensions (in)**
None			
Technical Manuals			
Army	**Air Force**	**Marine Corps**	**Navy**
TM 9-6115-664-14			

MEP-952A on M557

(Power connector side)

MEP-952A on M557

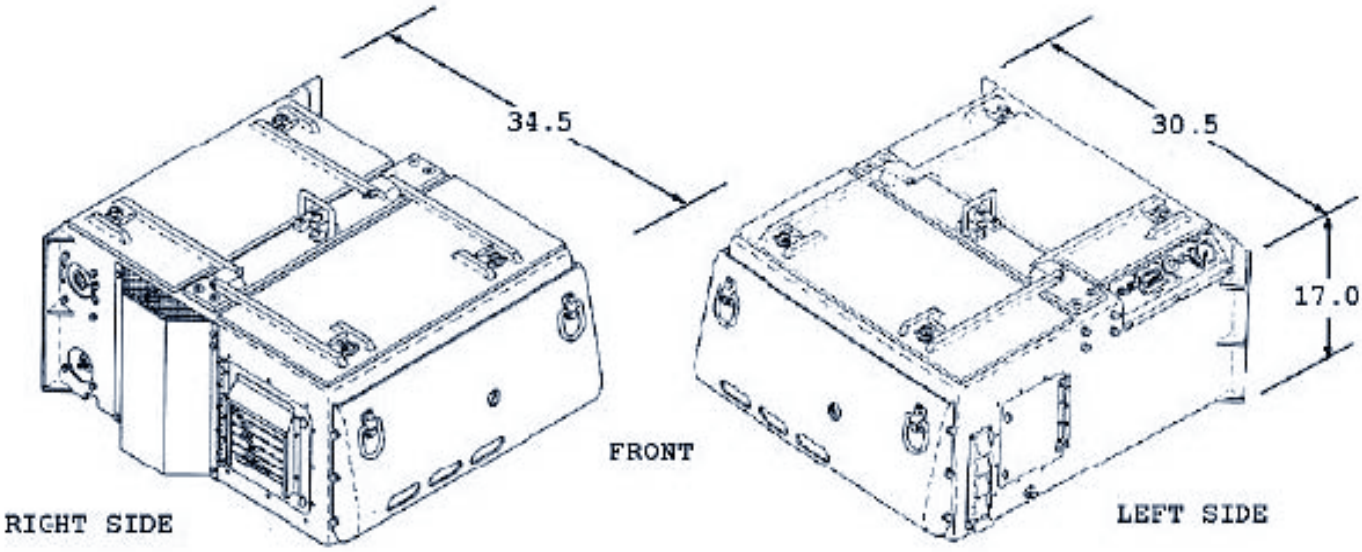

FIGURE C- 9 Auxiliary Power Unit, DED, 5 kW, 28 VDC

Source: https://assist.dla.mil -- Downloaded: 2016-12-11T08:30Z
Check the source to verify that this is the current version before use.

C.3.1.5 Tactical Quiet Generator Set, DED, 10 kW.

TABLE C- IV Characteristic Data for MEP-803A and MEP-813A

Identification Data		
Model	MEP-803A	MEP-813A
Description	10 kW TQG, 60 Hz, DED, Skid Mounted	10 kW TQG, 400 Hz, DED, Skid Mounted
NSN	6115-01-275-5061	6115-01-274-7392
LIN	G74711	G74779
SSN	M53500	M53500
Specification	MIL-DTL-53133/3	MIL-DTL-53133/4
Trailer Configuration	PU-798A: FIGURE C- 11 PP-AN/MJQ-37: FIGURE C- 13; PU-798: FIGURE C- 15	PU-799A: FIGURE C- 12 PP-AN/MJQ-38: FIGURE C- 14; PU-799: FIGURE C- 16
Physical Characteristic		
Dimensions & Ship Cube	62” x 32” x 37” & 42 ft^3	
Wet Weight (lbs)	1182	1220
Engine	Diesel, Onan model: DN4M-1, 4 cycle, 22 horsepower @ 1800 RPM, 24 VDC start, Liquid cooled.	
Instrumentation	Hour meter, voltmeter, frequency, amps (% rated load), oil pressure, fuel, coolant temperature, battery amps, emergency stop, battle short.	
Fuel & Fuel Tank Capacity	Diesel DL-1, DL-2; Jet Fuel JP-8 & 9 gallons	
Performance Characteristic		
Power Rating	10kW, 0.8 pf @ 4000 ft/120°F; Derate: 3.5%/1000 ft from 4000 to 8000 ft	
Environmental Capability	-25°F (-50°F with Winterization Kit) to 120°F, rain, humidity, altitude, sand/dust, transportation, cold storage: -60°F, salt spray, fungus, 15° incline.	
Protective Devices	Automatic shut down for overspeed and short circuit. Automatic shut down with emergency bypass for low oil pressure, high temperature, low fuel, and over-voltage. Drop load for under voltage, over current, and reverse power.	
Fuel consumption	0.97 gal/hour @ rated load	1.00 gal/hour @ rated load
Human Factors	MIL-STD-1474	
Noise	70 dBA @ 7 meters (23 feet)	
Reliability (MTBF)	771 hr @ 80% LCL	527 hr @ 80% LCL
Maintenance Ratio	less than 0.05	

Electrical Characteristic			
Basic Design	Drip proof generator enclosure, fungus & moisture treated, solid state voltage regulator, solderless connectors, Onan synchronous rotating field generator: 60 Hz: 4 pole alternator, 400 Hz: 24 pole.		
EMI	Meets MIL-STD-461C, Part 9 UM04		
EMP	HAEMP IAW MIL-STD-2169		
Motor load	35% dip, 5 sec to 95% init volt		
Voltage Connection	120/240 V, 1ph, 3 wire	120 V, 1ph, 2 wire	120/208 V, 3ph, 4 wire
Voltage adj. Range	228 –252 V	114 – 126 V	205 –220 V
Freq. adj. Range	±3%		

Electrical Performance			
Electric Power Quality		**Frequency**	**AC Voltage**
Regulation		3%	3%
Voltage modulation			1%
Short term steady state stability (30 sec)		2% bandwidth	2% bandwidth
Long term steady state stability (4 hr)		3% bandwidth	4% bandwidth
Application of rated load	transient	3% under	20% dip
	recovery time	3 sec	3 sec
Rejection of rated load	transient	4% over	20% rise
	recovery time	3 sec	3 sec
Max waveform deviation factor			6% (1 phase); 5%(3 phase)
Individual waveform harmonic			3% (1 phase); 2% (3 phase)

Source: https://assist.dla.mil -- Downloaded: 2016-12-11T08:30Z
Check the source to verify that this is the current version before use.

TABLE C- IV Characteristic Data for MEP-803A and MEP-813A Continued.

Optional Equipment			
Description	**NSN**	**Technical Bulletin**	**Effect on Dimensions (in)**
Winterization kit	6115-01-477-0564	TB 9-6115-642-13	None (internal)
Technical Manuals			
Army	**Air Force**	**Marine Corps**	**Navy**
TM 9-6115-642-10	TO 35C2-3-455-11	TM 09247A/09248A-10/1	
TM 9-6115-642-24	TO 35C2-3-455-12	TM 09247A/09248A-24/2	
TM 9-6115-642-24P	TO 35C2-3-455-14	TM 09247A/09248A-24P/3	
LO 9-6115-642-12		LI 09247A/09248A-12	
TB 9-6115-642-24		SI 09247A/09248A-24	
TM 9-2815-253-24	TO 38G1-93-2	TM 2815-24/3	
TM 9-2815-253-24P	TO 38G1-93-4	TM 2815-24P/1	

MEP-803A or MEP-813A

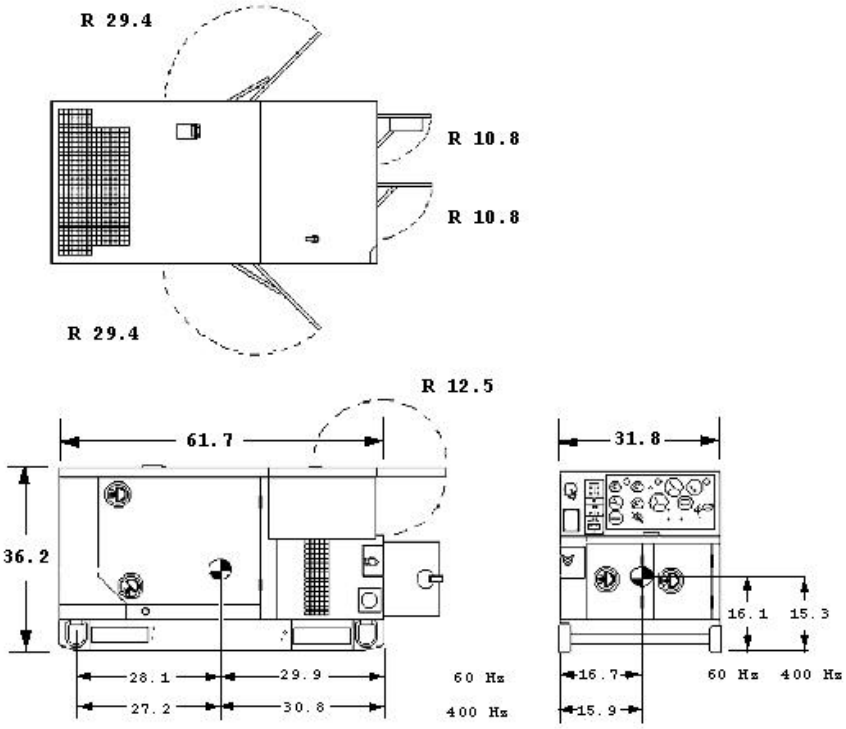

FIGURE C- 10 Tactical Quiet Generator Set, 10 kW

Source: https://assist.dla.mil -- Downloaded: 2016-12-11T08:30Z
Check the source to verify that this is the current version before use.

Identification Data			
Model	**NSN**	**LIN**	**SSN**
PU-798A	6115-01-413-3818	G42170	R62700
Physical Characteristic			
Dimension: LWH (in)	**Ship Cube (ft^3)**	**Wet Weight (lbs)**	**Ship Weight (lbs)**
135 x 86 x 72	484	2554	2480
Documentation			
Technical Manual	**Specification**	**Camouflage Drawing**	**Top Assembly**
TM 9-6115-660-13&P		97403-13228E1611	TA-13230E6530

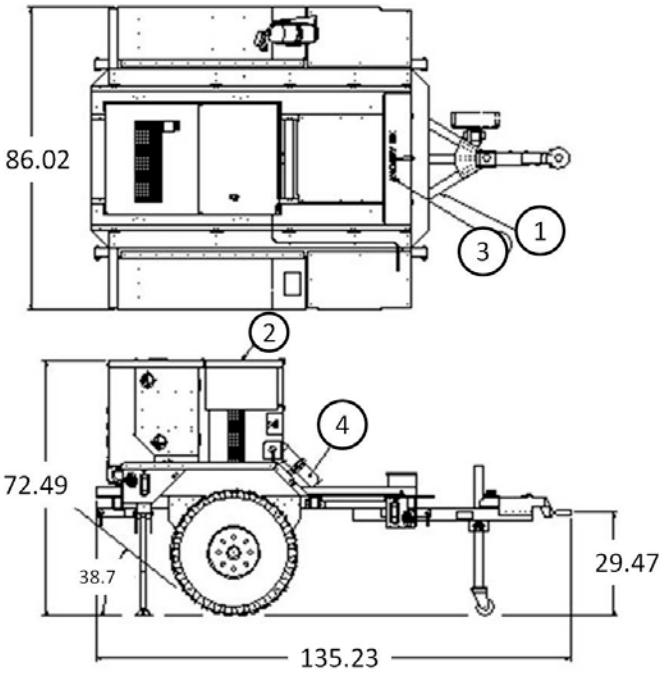

FIND NO.	COMPONENT	QTY	IDENTIFIER
1	Light Tactical Trailer (LTT)	1	97403-13230E6565
2	MEP-803A	1	6115-01-275-5061
3	Accessory box	1	97403-13229E7946
4	Fire extinguisher, 5 lb., A-A-1106	1	4210-00-270-4512

FIGURE C- 11 PU-798A - TQG Power Unit, 10 kW, 60 Hz

Source: https://assist.dla.mil -- Downloaded: 2016-12-11T08:30Z
Check the source to verify that this is the current version before use.

Identification Data			
Model	**NSN**	**LIN**	**SSN**
PU-799A	6115-01-413-3819	G53403	R62700
Physical Characteristic			
Dimension: LWH (in)	**Ship Cube (ft^3)**	**Wet Weight (lbs)**	**Ship Weight (lbs)**
135 x 86 x 72	484	2585.	2510
Documentation			
Technical Manual	**Specification**	**Camouflage Drawing**	**Top Assembly**
TM 9-6115-660-13&P		97403-13228E1611	TA-13230E6540

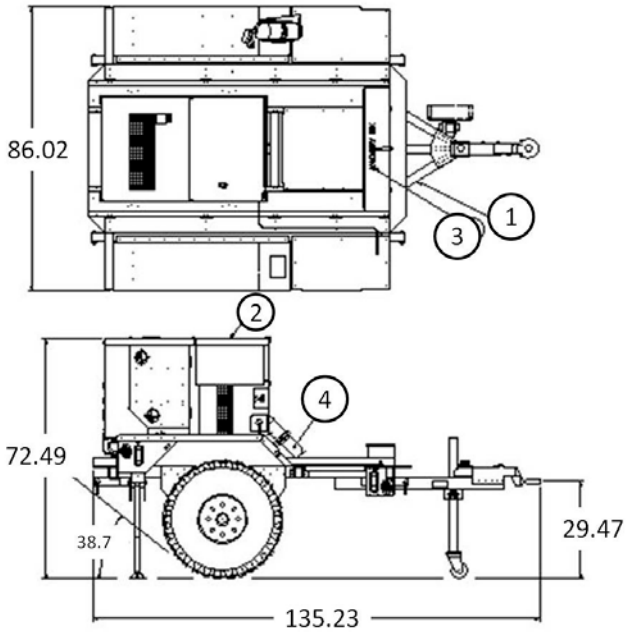

FIND NO.	COMPONENT	QTY	IDENTIFIER
1	Light Tactical Trailer (LTT)	1	7403-13230E6565
2	MEP-813A	1	6115-01-274-7392
3	Accessory box	1	97403-13229E7946
4	Fire extinguisher, 5 lb., A-A-1106	1	4210-00-270-4512

FIGURE C- 12 PU-799A - TQG Power Unit, 10 kW, 400 Hz

Source: https://assist.dla.mil -- Downloaded: 2016-12-11T08:30Z
Check the source to verify that this is the current version before use.

Identification Data			
Model	**NSN**	**LIN**	**SSN**
PP-AN/MJQ-37	6115-01-299-6035	P42262	R62700
Physical Characteristic			
Dimension: LWH (in)	**Ship Cube (ft^3)**	**Wet Weight (lbs)**	**Ship Weight (lbs)**
165 x 83 x 71	563	4334	4540
Documentation			
Technical Manual	**Specification**	**Camouflage Drawing**	**Top Assembly**
TM 9-6115-660-13&P	MIL-P-53132/6	97403-13228E1612	TA-13229E5670

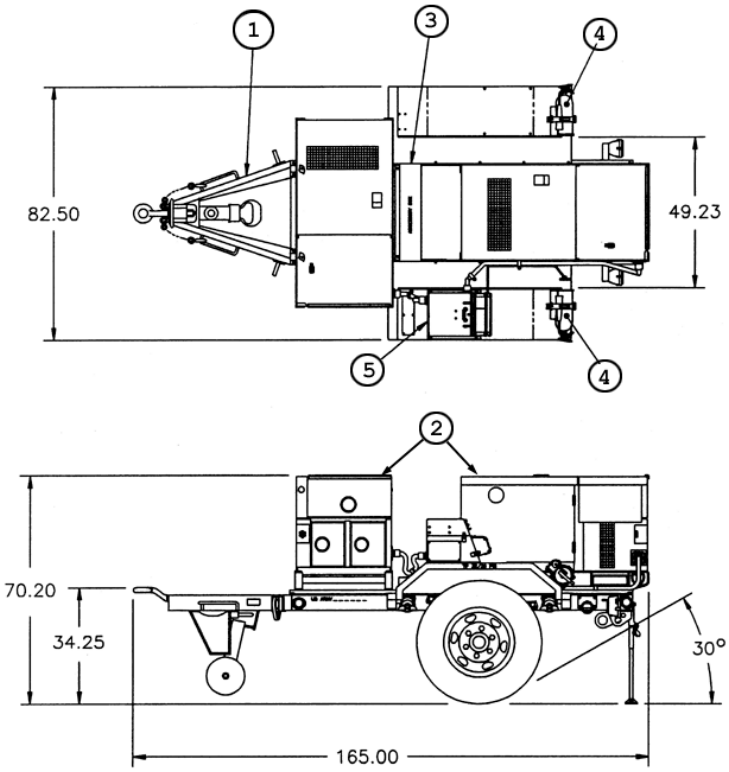

FIND NO.	COMPONENT	QTY	IDENTIFIER
1	1-1/2 Ton modified trailer,M103A3	1	97403-13229E5825
2	MEP-803A	2	6115-01-275-5061
3	Accessory box	1	97403-13229E7946
4	Fire extinguisher, 5 lb., A-A-1106	2	4210-00-270-4512
5	Switch box	1	97403-13230E6535

FIGURE C- 13 PP-AN/MJQ-37 - TQG Power Plant, 10 kW, 60 Hz

Source: https://assist.dla.mil -- Downloaded: 2016-12-11T08:30Z
Check the source to verify that this is the current version before use.

Identification Data			
Model	**NSN**	**LIN**	**SSN**
PP-AN/MJQ-38	6115-01-313-4214	P42330	R62700
Physical Characteristic			
Dimension: LWH (in)	**Ship Cube (ft^3)**	**Wet Weight (lbs)**	**Ship Weight (lbs)**
165 x 83 x 71	563	4500	4350
Documentation			
Technical Manual	**Specification**	**Camouflage Drawing**	**Top Assembly**
TM 9-6115-660-13&P	MIL-P-53132/7	97403-13228E1612	TA-13229E5680

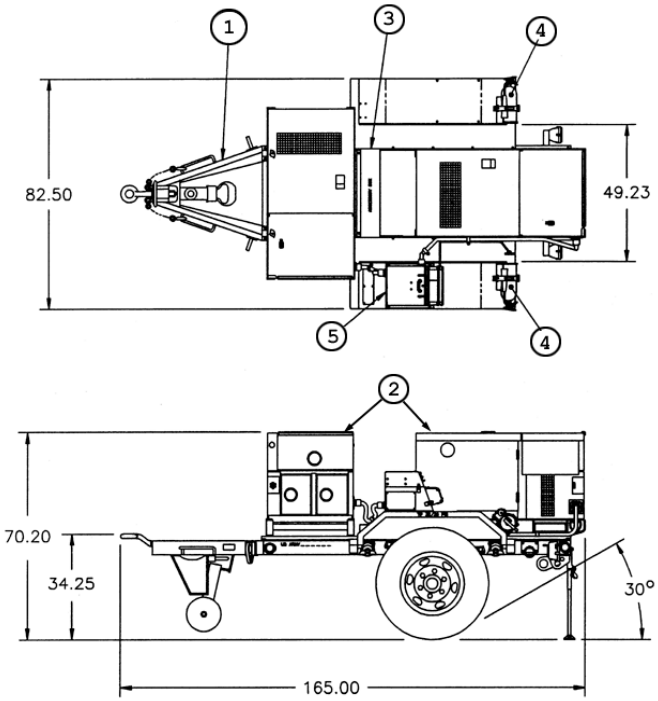

FIND NO.	COMPONENT	QTY	IDENTIFIER
1	1-1/2 Ton modified trailer, M103A3	1	97403-13229E5825
2	MEP-813A	2	6115-01-274-7392
3	Accessory box	1	97403-13229E7946
4	Fire extinguisher, 5 lb., A-A-1106	1	4210-00-270-4512
5	Switch box	1	97403-13230E6535

FIGURE C- 14 PP-AN/MJQ-38 - TQG Power Plant, 10 kW, 400 Hz

Source: https://assist.dla.mil -- Downloaded: 2016-12-11T08:30Z
Check the source to verify that this is the current version before use.

Identification Data			
Model	**NSN**	**LIN**	**SSN**
PU-798	6115-01-319-9032	G42170	R62700
Physical Characteristics			
Dimension: LWH (in)	**Ship Cube (ft^3)**	**Wet Weight (lbs)**	**Ship Weight (lbs)**
145 x 84 x 76	535	2454	2380
Documentation			
Technical Manual	**Specification**	**Camouflage Drawing**	**Top Assembly**
TM 9-6115-660-13&P	**NOT PROCURABLE**	97403-13228E1611	TA-13229E5715

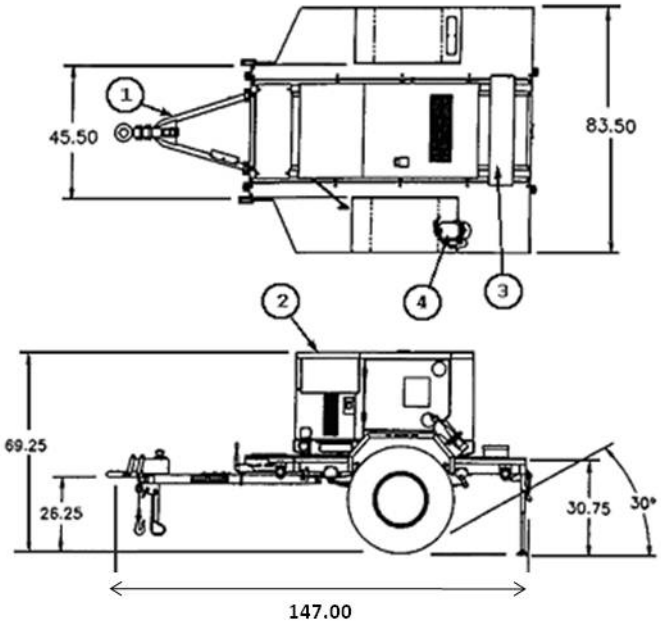

FIND	COMPONENT	QTY	IDENTIFIER
1	1 Ton modified Trailer, M116A3 (shown)	1	97403-13229E5757
2	MEP-803A	1	6115-01-275-5061
3	Accessory box	1	97403-13229E7946
4	Fire extinguisher, 5 lb., A-A-1106	1	4210-00-270-4512

FIGURE C- 15 PU-798 - TQG Power Unit, 10 kW, 60 Hz

Source: https://assist.dla.mil -- Downloaded: 2016-12-11T08:30Z
Check the source to verify that this is the current version before use.

Identification Data			
Model	**NSN**	**LIN**	**SSN**
PU-799	6115-01-313-4283	G53403	R62700
Physical Characteristics			
Dimension: LWH (in)	**Ship Cube (ft^3)**	**Wet Weight (lbs)**	**Ship Weight (lbs)**
145 x 84 x 76	535	2485	2410
Documentation			
Technical Manual	**Specification**	**Camouflage Drawing**	**Top Assembly**
TM 9-6115-660-13&P	**NOT PROCURABLE**	97403-13228E1611	TA-13229E5725

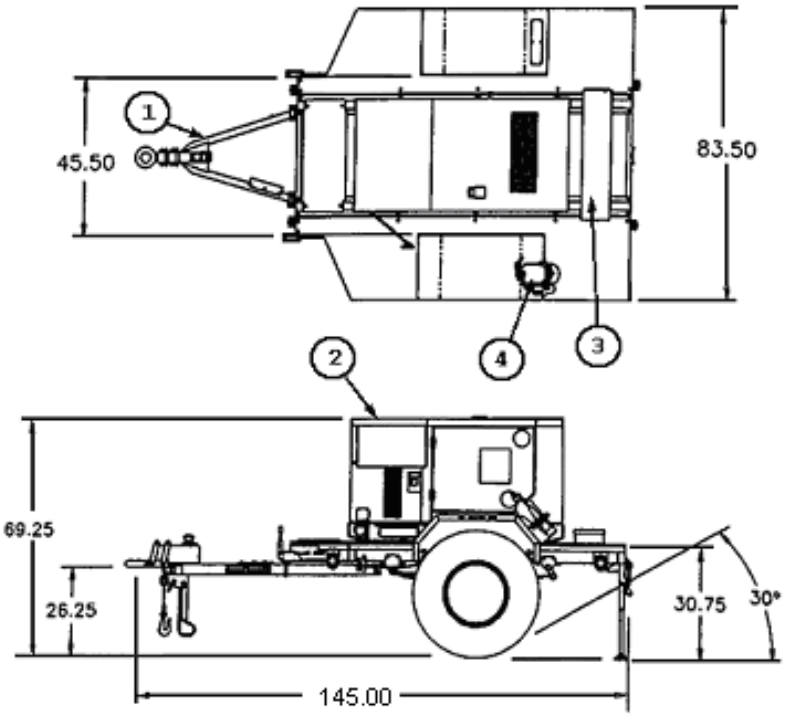

FIND	COMPONENT	QTY	IDENTIFIER
1	Modified 1 ton trailer, M116A3	1	97403-13229E5757
2	MEP-813A	1	6115-01-274-7392
3	Accessory box	1	97403-13229E7946
4	Fire extinguisher, 5 lb., A-A-1106	1	4210-00-270-4512

FIGURE C- 16 PU-799 - TQG Power Unit, 10 kW, 400 Hz

Source: https://assist.dla.mil -- Downloaded: 2016-12-11T08:30Z
Check the source to verify that this is the current version before use.

C.3.1.6 Auxiliary Power Unit, DED, 10 kW, 60 Hz. (Not Separately Type Classified).

TABLE C- V Characteristic Data for MEP-903A

Identification Data	
Model	MEP-903A
Description	APU, 10 kW, DED, 60 Hz
NSN	6115-01-431-3062
LIN	
SSN	
Specification	**NOT PROCURABLE**
Configuration	Used with SICPS shelter.
Physical Characteristics	
Dimensions LWH (in)	36 x 26.5 x 27.7
Ship Cube (ft^3)	15.3
Wet Weight (lbs)	460 lb on rail for shelter tunnel insertion
Engine	Kubota turbocharged diesel, 22.8 hp @ 3600 rpm, liquid cooled, Electronic governor, Starter: 28 VDC (from vehicle). No belts or pulleys. 20 amp battery charger.
Instrumentation	Start/stop/preheat switch, volt meter, frequency meter, battery charging ammeter, percent load. Indicator for power on and malfunction indicator energizes appropriate fault lamp.
Fuels	Diesel DL-1, DL-2 and jet fuel JP-8 and Jet A-1. Uses vehicle fuel via quick disconnect fuel line.
Performance Characteristics	
Power Rating	10 kW, 60 Hz @ .8 pf from -25°F to 120°F, 4000 ft/95 °F. Derate 3.5% per 1000 ft above 4000 ft up to 8000 ft.
Environmental Capability	(when housed in shelter tunnel) -25°F to 120°F, rain, humidity, sand/dust, -60°F cold storage, salt spray, fungus.
Protective Devices	Automatic shut down with emergency bypass for overspeed, low oil pressure, low fuel (day tank), high coolant temperature, overvoltage, undervoltage, short circuit, overload, AC interrupt, battle short.
Fuel consumption	
Human Factors	MIL-STD-1474
Noise	70 dBA @ 7 meters (23 feet)
Reliability (MTBF)	400 hr
Electrical Characteristics	
Basic Design	Alternator: brushless, solid state regulator, 2 pole, 3600 rpm, sealed bearings. Shelter has standard power outlets.
EMI	Suppressed to MIL-STD-461 limits.
EMP	HAEMP protected
Motor load	40% dip ,5 sec recovery
Voltage Connection	120V, 1 phase, 2 wire / 120/240V, 1 phase, 3 wire
Voltage adj. Range	114 - 126 V / 228 - 252 V
Freq. adj. Range	±3%

Electrical Performance				
Electric Power Quality		**Frequency**	**AC Voltage**	**DC Voltage**
Regulation		3%	3%	
Voltage modulation			3%	
Short term steady state stability (30 sec)		2% bandwidth	2% bandwidth	
Long term steady state stability (4 hr)		3% bandwidth	4% bandwidth	
Application of rated load	transient	3% under	20% dip	
	recovery time	3 sec	1 sec	
Rejection of rated load	transient	3% over	30% rise	
	recovery time	3 sec	1 sec	
Max waveform deviation factor			6%	
Individual waveform harmonic			2%	

Source: https://assist.dla.mil -- Downloaded: 2016-12-11T08:30Z
Check the source to verify that this is the current version before use.

TABLE C- V Characteristic Data for MEP-903A Continued.

Optional Equipment			
Description	**NSN**	**Weight (lbs)**	**Effect on Dimensions (in)**
None			
Technical Manuals			
Army	**Air Force**	**Marine Corps**	**Navy**
TM 9-6115-670-14&P			

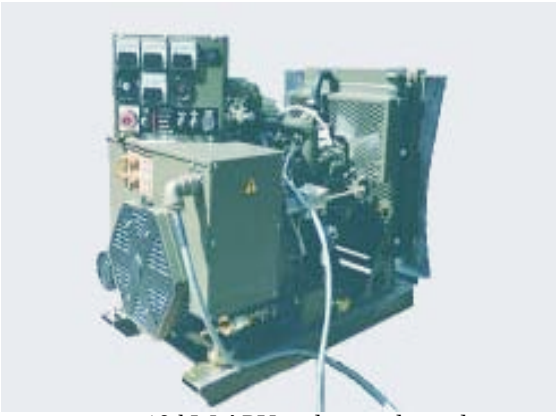

10 kW APU and control panel removed from shelter. – rear view --

10 kW APU ready to slide into shelter.

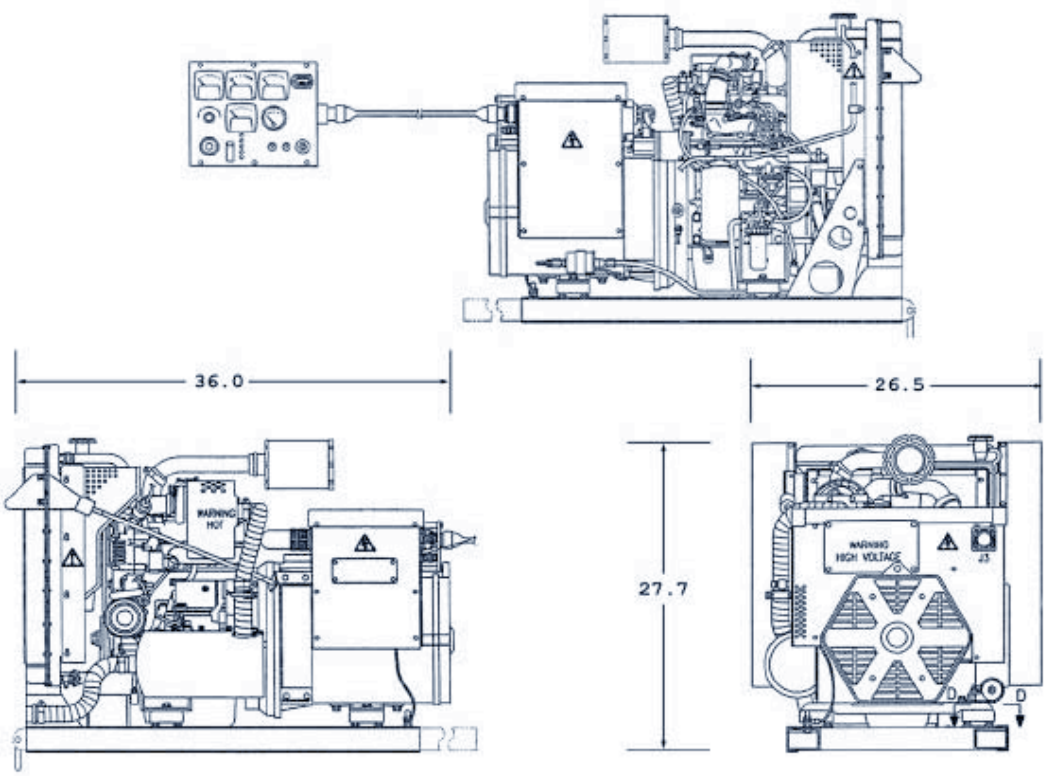

FIGURE C- 17 Auxiliary Power Unit (APU), DED, 10 kW, 60 Hz

Source: https://assist.dla.mil -- Downloaded: 2016-12-11T08:30Z
Check the source to verify that this is the current version before use.

C.3.1.7 Tactical Quiet Generator Set, DED, 15 kW.

TABLE C- VI Characteristic Data for MEP-804B and MEP-814B

Identification Data		
Model	MEP-804B	MEP-814B
Description	15 kW TQG, 50/60 Hz, DED, Skid Mtd	15 kW, TQG, 400 Hz, DED, Skid Mtd
NSN	6115-01-530-1458	6115-01-529-9494
LIN	G12170	G12238
SSN	M53500	M53500
Specification	MIL-DTL-53133/5	MIL-DTL-53133/6
Trailer Configuration	PU-801B: FIGURE C- 20; PU-802A: FIGURE C- 21; PP-AN/MJQ-48B: FIGURE C- 23	PU-800A: FIGURE C- 19; PP-AN/MJQ-39B: FIGURE C- 22
Physical Characteristic		
Dimensions & Ship Cube	70” x 36” x 55” & 80 ft^3	
Wet Weight (lbs)	2124	2238
Engine	Yanmar - Model: 4TNV84T-DFM 4 Cycle, Liquid Cooled, 4 Cyl, 3.31 Inch Bore, 40 BHP @ 1800 RPM, 24 VDC starter.	
Instrumentation	Hour meter, voltmeter, frequency, amps (% rated load), oil pressure, fuel, coolant temperature, battery amps, emergency stop, battle short.	
Fuel & Fuel Tank Capacity	Diesel DL-1, DL-2; Jet Fuel JP-8 & 14 gallons	
Performance Characteristic		
Power Rating	15 kW (12.5 kW @ 50 Hz), 0.8 pf @ 4000 ft/120 °F; Derate: 3.5%/1000 ft from 4000 to 8000 ft	
Environmental Capability	-25°F (-50°F W/kit) to 120°F, rain, humidity, altitude, sand/dust, transportation, cold storage: -60°F, salt spray, fungus, 15° incline.	
Protective Devices	Automatic shut down for overspeed and short circuit. Automatic shut down with emergency bypass for low oil pressure, high temperature, low fuel, and over-voltage. Drop load for under voltage, over current, and reverse power.	
Fuel consumption	1.44 gal/hour @ rated load	1.75 gal/hour @ rated load
Human Factors	MIL-STD-1474	
Noise	70 dBA @ 7 meters (23 feet)	
Reliability (MTBF)	594 hr @ 80% LCL	377 hr @ 80% LCL
Maintenance Ratio	less than 0.05	

Electrical Characteristic						
Basic Design	Drip proof generator enclosure, fungus & moisture treated, solid state voltage regulator, solderless connectors, brushless Marathon/Lima generator.					
EMI	Meets MIL-STD-461C, Part 9 UM04					
EMP	HAEMP IAW MIL-STD-2169					
Motor load	30% dip, .7 sec to 95% init volt			25% dip,.7 sec to 95% init volt		
Voltage Connection	120/208V, 3ph, 4 wire			240/416V, 3ph, 4 wire		
Frequency	**50 Hz**	**60 Hz**	**400 Hz**	**50 Hz**	**60 Hz**	**400 Hz**
Voltage adj. Range	190 – 213 V	197 – 240 V	197 – 240 V	380 – 426 V	395 – 480 V	395 – 458 V
Freq. adj. Range	48 – 52 Hz	58 – 62 Hz	390 – 420 Hz	48 – 52 Hz	58 – 62 Hz	390 – 420 Hz

Electrical Performance					
Electric Power Quality		**MEP-804B**		**MEP-814B**	
		Frequency	**AC Voltage**	**Frequency**	**AC Voltage**
Regulation		0.25%	1%	0.25%	1%
Voltage modulation			1%		1%
Short term steady state stability (30 sec)		0.5% bandwidth	1% bandwidth	0.5% bandwidth	1% bandwidth
Long term steady state stability (4 hr)		1% bandwidth	2% bandwidth	1% bandwidth	2% bandwidth
Application of rated load	transient	4% under	15% dip	1.5 % under	12% dip
	recovery time	2 sec	0.5sec	1 sec	0.5 sec
Rejection of rated load	transient	4% over	15% rise	1.5% over	12% rise
	recovery time	2 sec	0.5 sec	1 sec	0.5 sec
Max waveform deviation factor			5%		5%
Individual waveform harmonic			2%		2%

Source: https://assist.dla.mil -- Downloaded: 2016-12-11T08:30Z
Check the source to verify that this is the current version before use.

TABLE C- VI Characteristic Data for MEP-804B and MEP-814B Continued.

Optional Equipment			
Description	**NSN**	**Technical Bulletin**	**Effect on Dimensions (in)**
Winterization kit	6115-01-477-0566	TB 9-6115-643-13	None (internal)
Technical Manuals			
Army	**Air Force**	**Marine Corps**	**Navy**
TM 9-6115-643-10	TO 35C2-3-455-21	None	None
TM 9-6115-643-24	TO 35C2-3-455-22		
TM 9-6115-643-24P	TO 35C2-3-455-24		
TM 9-2815-254-24	TO 38G1-94-2		
TM 9-2815-254-24P	TO 38G1-94-4		
LO 9-6115-643-12			
TB 9-6115-643-24			

MEP-804A, MEP-804B, MEP-814A or MEP-814B

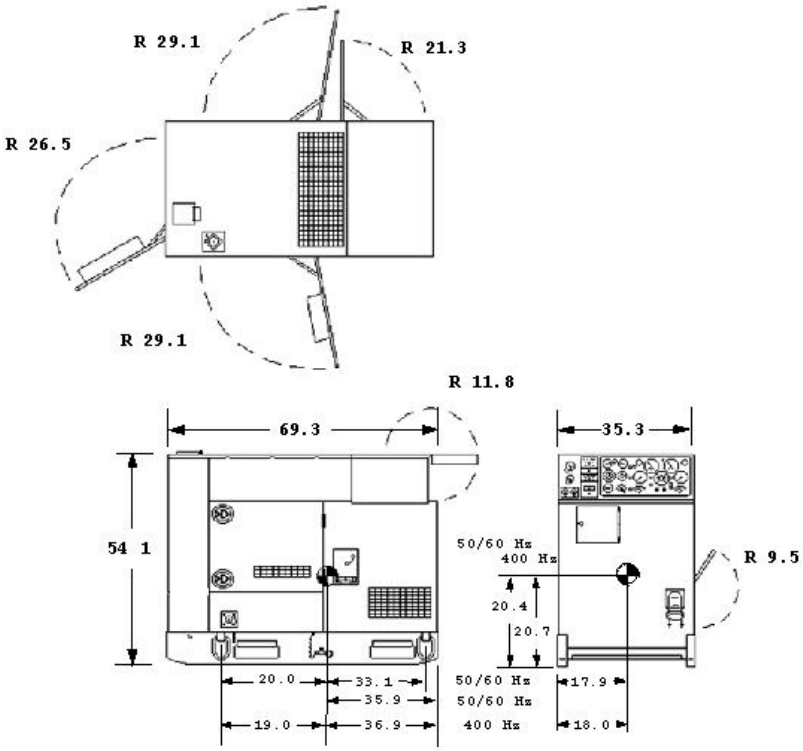

FIGURE C- 18 Tactical Quiet Generator Set, 15 kW

Source: https://assist.dla.mil -- Downloaded: 2016-12-11T08:30Z
Check the source to verify that this is the current version before use.

Identification Data			
Model	**NSN**	**LIN**	**SSN**
PU-800A	6115-01-565-0929	G78203	R62700
Physical Characteristic			
Dimension: LWH (in)	**Ship Cube (ft^3)**	**Wet Weight (lbs)**	**Ship Weight (lbs)**
165 x 95 x 84	762	4975	4855
Documentation			
Technical Manual	**Specification**	**Camouflage Drawing**	**Top Assembly**
TM 9-6115-661-13&P	MIL-P-53132	97403-13228E1614	TA-97-2111

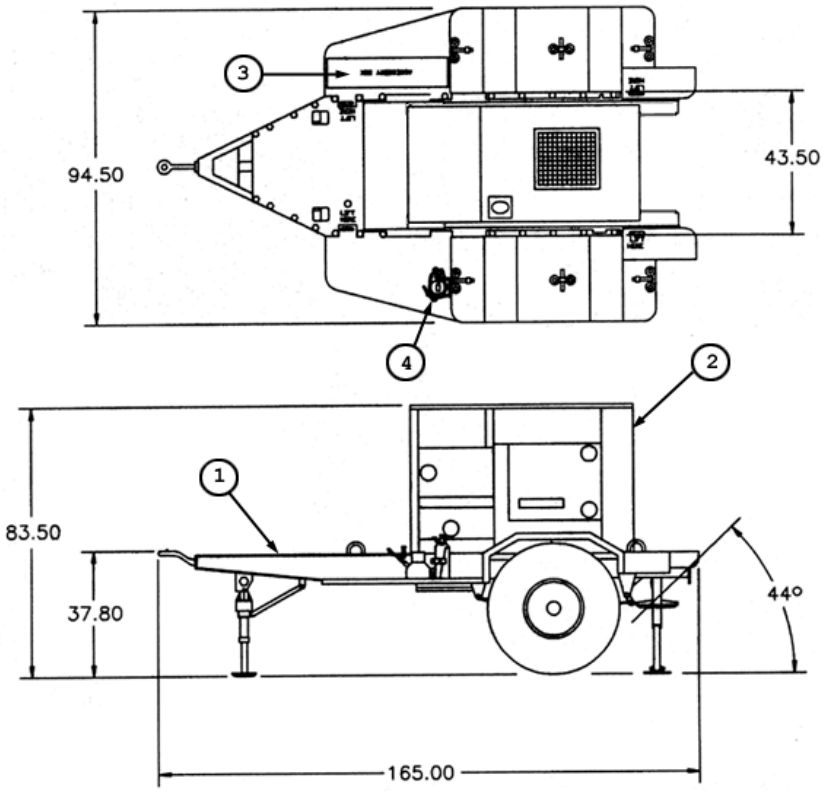

FIND NO.	COMPONENT	QTY	IDENTIFIER
1	2 1/2 Ton modified Trailer, M200A1	1	97403-13229E9623
2	MEP-814B	1	6115-01-274-7393
3	Accessory box	1	97403-13229E7946
4	Fire extinguisher, 5 lb., A-A-1106	1	4210-00-270-4512

FIGURE C- 19 PU-800A - TQG Power Unit, 15 kW, 400 Hz

Source: https://assist.dla.mil -- Downloaded: 2016-12-11T08:30Z
Check the source to verify that this is the current version before use.

Identification Data			
Model	**NSN**	**LIN**	**SSN**
PU-801B	6115-01-565-0874	G78374	R62700
Physical Characteristic			
Dimension: LWH (in)	**Ship Cube (ft^3)**	**Wet Weight (lbs)**	**Ship Weight (lbs)**
135 x 86 x 91	611	3516	3400
Documentation			
Technical Manual	**Specification**	**Camouflage Drawing**	**Top Assembly**
TM 9-6115-661-13&P	MIL-P-53132/12	97403-13228E1613	TA-97-2003

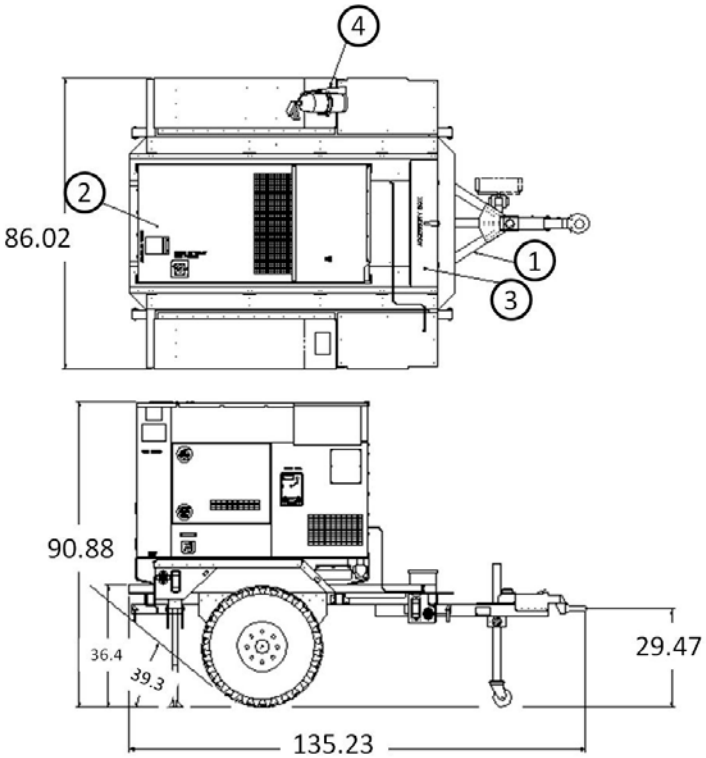

FIND NO.	COMPONENT	QTY	IDENTIFIER
1	Light Tactical Trailer (LTT)	1	97403-13230E6565
2	MEP-804B	1	6115-01-274-7388
3	Accessory box	1	97403-13229E7946
4	Fire extinguisher, 5 lb., A-A-1106	1	4210-00-270-4512

FIGURE C- 20 PU-801B - TQG Power Unit, 15 kW, 50/60 Hz

Source: https://assist.dla.mil -- Downloaded: 2016-12-11T08:30Z
Check the source to verify that this is the current version before use.

Identification Data			
Model	**NSN**	**LIN**	**SSN**
PU-802A	6115-01-565-1576	G53778	R62700
Physical Characteristic			
Dimension: LWH (in)	**Ship Cube (ft^3)**	**Wet Weight (lbs)**	**Ship Weight (lbs)**
165 x 95 x 84	762	5040	4920
Documentation			
Technical Manual	**Specification**	**Camouflage Drawing**	**Top Assembly**
TM 9-6115-661-13&P	MIL-P-53132/13	97403-13228E1614	TA-97-2101

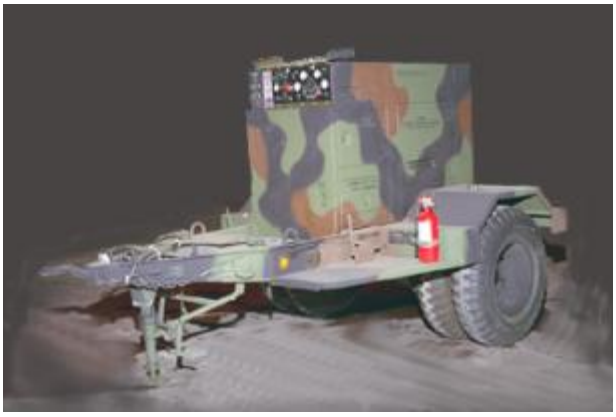

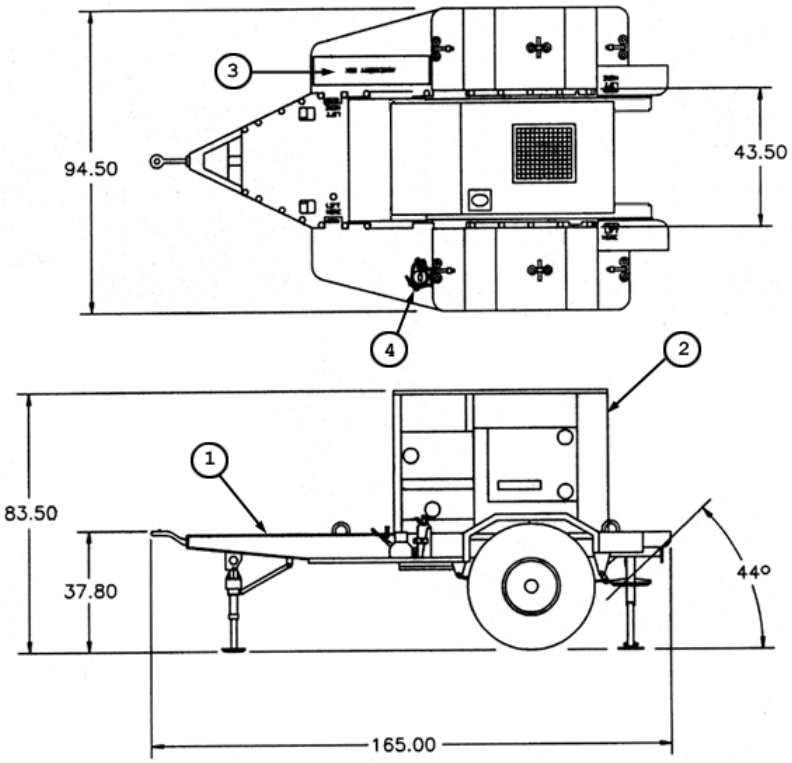

FIND NO.	COMPONENT	QTY	IDENTIFIER
1	2-1/2 Ton modified trailer, M200A1	1	97403-13229E9632
2	MEP-804B	1	6115-01-274-7388
3	Accessory box	1	97403-13229E7946
4	Fire extinguisher, 5 lb., A-A-1106	1	4210-00-270-4512

FIGURE C- 21 PU-802A - TQG Power Unit, 15 kW, 50/60 Hz

Source: https://assist.dla.mil -- Downloaded: 2016-12-11T08:30Z
Check the source to verify that this is the current version before use.

Identification Data			
Model	**NSN**	**LIN**	**SSN**
PP-ANMJQ-39B	6115-01-565-0701	P42614	R62700
Physical Characteristic			
Dimension: LWH (in)	**Ship Cube (ft^3)**	**Wet Weight (lbs)**	**Ship Weight (lbs)**
165 x 95 x 84 each	762 each	Unit A: 4863 Unit B: 4893	Unit A: 4765 Unit B: 4765
Documentation			
Technical Manual	**Specification**	**Camouflage Drawing**	**Top Assembly**
TM 9-6115-661-13&P	MIL-P-53132	97403-13228E1614	TA-97-3104

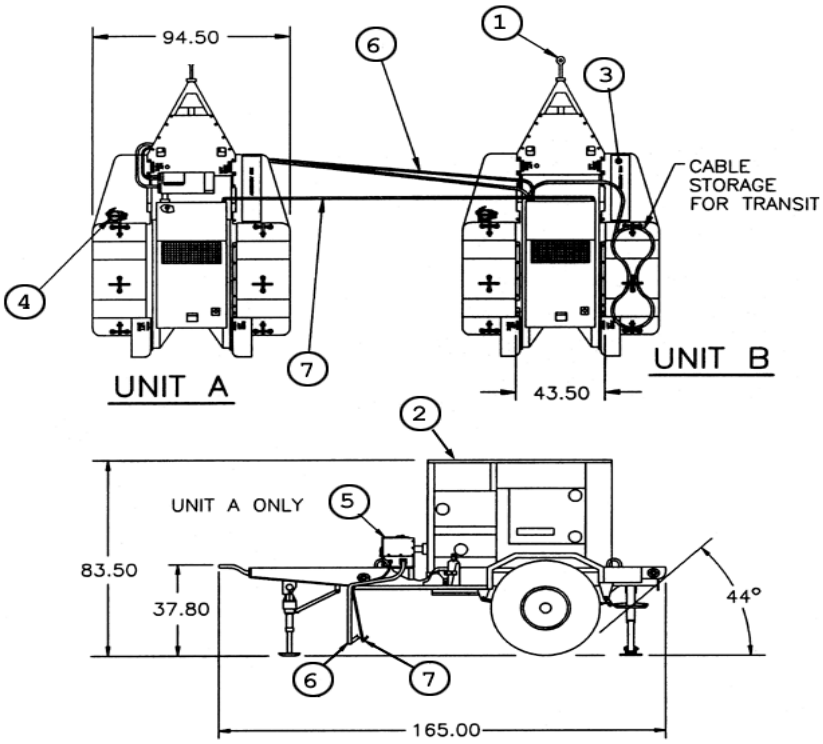

FIND NO.	COMPONENT	QTY	IDENTIFIER
1	2-1/2 Ton modified trailer, M200A1	2	97403-13229E9632
2	MEP-814B	2	6115-01-529-9494
3	Accessory box	2	97403-13229E7946
4	Fire extinguisher, 5 lb., A-A-1106	2	4210-00-270-4512
5	Switch box (unit A)	1	97403-13229E5795-1
6	Cable assembly (unit B)	1	97403-13229E5674
7	Paralleling cable assembly	2	30554-88-22209

FIGURE C- 22 PP-AN/MJQ-39B - TQG Power Plant, 15 kW, 400 Hz

Source: https://assist.dla.mil -- Downloaded: 2016-12-11T08:30Z
Check the source to verify that this is the current version before use.

Identification Data			
Model	**NSN**	**LIN**	**SSN**
PP-AN/MJQ-48B	6115-01-565-0691	P63530	R62700
Physical Characteristic			
Dimension: LWH (in)	**Ship Cube (ft^3)**	**Wet Weight (lbs)**	**Ship Weight (lbs)**
135 x 86 x 91 each	611 each	Unit A: 3570 Unit B: 3570	Unit A: 3470 Unit B: 3470
Documentation			
Technical Manual	**Specification**	**Camouflage Drawing**	**Top Assembly**
TM 9-6115-661-13&P	MIL-P-53132	97403-13228E1728	TA-97-3003

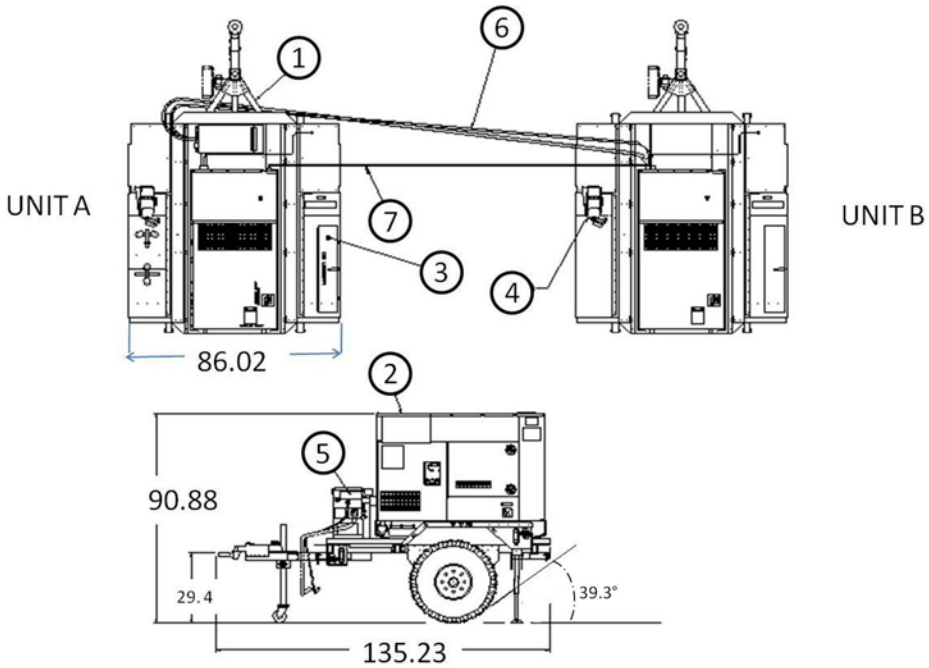

FIND NO.	COMPONENT	QTY	IDENTIFIER
1	Light Tactical Trailer (LTT)	2	97403-13230E6565
2	MEP-804B	2	6115-01-274-7388
3	Accessory box	2	97403-13229E7946
4	Fire extinguisher, 5 lb., A-A-1106	2	4210-00-270-4512
5	Switch box (unit A)	1	97403-13229E5795-1
6	Cable assembly (unit B)	1	97403-13229E5674
7	Paralleling cable assembly	2	30554-88-22209

FIGURE C- 23 PP-AN/MJQ-48B - TQG Power Plant, 15 kW, 50/60 Hz

Source: https://assist.dla.mil -- Downloaded: 2016-12-11T08:30Z
Check the source to verify that this is the current version before use.

This Page Intentionally Left Blank

Source: https://assist.dla.mil -- Downloaded: 2016-12-11T08:30Z
Check the source to verify that this is the current version before use.

C.3.1.8 TQG Generator Set, DED, Skid Mounted, 15 kW.

TABLE C- VII Characteristic Data for MEP-804A and MEP 814A

Identification Data						
Model	MEP-804A			MEP-814A		
Description	TQG, DED, 15 kW 50/60 Hz, Skid Mounted			TQG, DED, Skid Mounted, 15 kW, 400 Hz		
NSN	6115-01-274-7388			6115-01-274-7393		
LIN	G12170			G12238		
SSN	M53500			M53500		
Specification	**NOT PROCURABLE** (MIL-DTL-53133/5)			**NOT PROCURABLE** (MIL-DTL-53133/6)		
Trailer Configuration	PU-801: FIGURE C- 26;PU-801A: FIGURE C- 27; PU-802: FIGURE C- 28; PP-AN/MJQ-48: FIGURE C- 30; PP-AN/MJQ-48A: FIGURE C- 31			PU-800: FIGURE C- 25; PP-AN/MJQ-39: FIGURE C- 29		
Physical Characteristics						
Dimensions & Ship Cube	70” x 36” x 55” & 77 ft^3					
Wet Weight (lbs)	2124			2238		
Engine	Yanmar - Model:4TNV84T-DFM 4 Cycle, Liquid Cooled, 4 Cyl, 3.31 Inch Bore, 40 BHP @ 1800 RPM, 24 VDC starter					
Instrumentation	Hour meter, voltmeter, frequency, amps (% RL), oil pressure, fuel, coolant temp, battery amps, emergency stop, battle short.					
Fuel & Fuel Tank Capacity	Diesel DL-1, DL-2; Jet Fuel JP-8 & 14 gallons					
Performance Characteristics						
Power Rating	15kW 12.5kW@ 50Hz), 0.8 pf @4K ft/120°F; 110% Max Power; De-rate: 3.5%/1K ft from 4K – 8K ft					
Environmental Capability	-25°F (-50°F W/kit) to 125°F, rain, humidity, altitude, sand/dust, transportation, cold storage: -60°F, salt spray, fungus, 15° incline.					
Protective Devices	Automatic shut down with emergency bypass for low oil pressure, coolant high-temperature, no fuel, over-speed, and over-voltage.					
Fuel consumption	1.44 gal/hour @ rated load			1.75 gal/hour @ rated load		
Human Factors	MIL-STD-1474					
Noise	70 dBA @ 7 meters (23 feet)					
Reliability (MTBF)	594 hr @ 80% LCL			377 hr @ 80% LCL		
Maintenance Ratio	less than 0.05					
Electrical Characteristics						
Basic Design	Drip proof generator enclosure, fungus & moisture treated, solid state voltage regulator, solderless connectors, brushless Marathon/Lima generator.					
EMI	Meets MIL-STD-461C Part 9.					
EMP	HAEMP IAW MIL-STD-2169					
Motor load	30% dip, 0.7 sec to 95% init volt			25% dip, 0.7 sec to 95% init volt		
Voltage Connection	120/208V, 3ph, 4 wire			240/416V, 3ph, 4 wire		
Frequency	**50 Hz**	**60 Hz**	**400 Hz**	**50 Hz**	**60 Hz**	**400 Hz**
Voltage adj. Range	190 – 213 V	197 - 240 V	197 - 229 V	380 – 426 V	395 - 480 V	395 - 458 V
Freq. adj. Range	± 2 Hz for 50/60 Hz			390 – 420 V Hz for 400 Hz		

Electrical Performance					
Electric Power Quality		**MEP 804A**		**MEP-814A**	
		Frequency	**AC Voltage**	**Frequency**	**AC Voltage**
Regulation		0.25%	1%	0.25%	1%
Voltage modulation			1%		1%
Short term steady state stability (30 sec)		0.5% bandwidth	1% bandwidth	0.5% bandwidth	1% bandwidth
Long term steady state stability (4 hr)		1% bandwidth	2% bandwidth	1% bandwidth	2% bandwidth
Application of rated load	transient	4% under	15% dip	1.5% under	12% dip
	recovery time	2 sec	0.5 sec	1 sec	0.5 sec
Rejection of rated load	transient	4% over	15% rise	1.5% over	12% rise
	recovery time	2 sec	0.5 sec	1 sec	0.5 sec
Max waveform deviation factor			5%		
Individual waveform harmonic			2%		

Source: https://assist.dla.mil -- Downloaded: 2016-12-11T08:30Z
Check the source to verify that this is the current version before use.

TABLE C- VII Characteristic Data for MEP-804A and MEP 814A Continued.

Optional Equipment			
Description	**NSN**	**Weight (lbs)**	**Effect on Dimensions (in)**
Winterization kit	6115-01-477-0566	TB 9-6115-643-13	None (internal)
Technical Manuals			
Army	**Air Force**	**Marine Corps**	**Navy**
Operators	TM 9-6115-643-10	TO 35C2-3-455-21	None
Unit, DS, GS	TM 9-6115-643-24	TO 35C2-3-455-22	
RPSTL	TM 9-6115-643-24P	TO 35C2-3-455-24	
Engine Maintenance	TM 9-2815-254-24	TO 38G1-94-2	
Engine Parts	TM 9-2815-254-24P	TO 38G1-94-4	
Lube Order	LO 9-6115-643-12		
Warranty	TB 9-6115-643-24		

MEP-804A/ MEP-814A

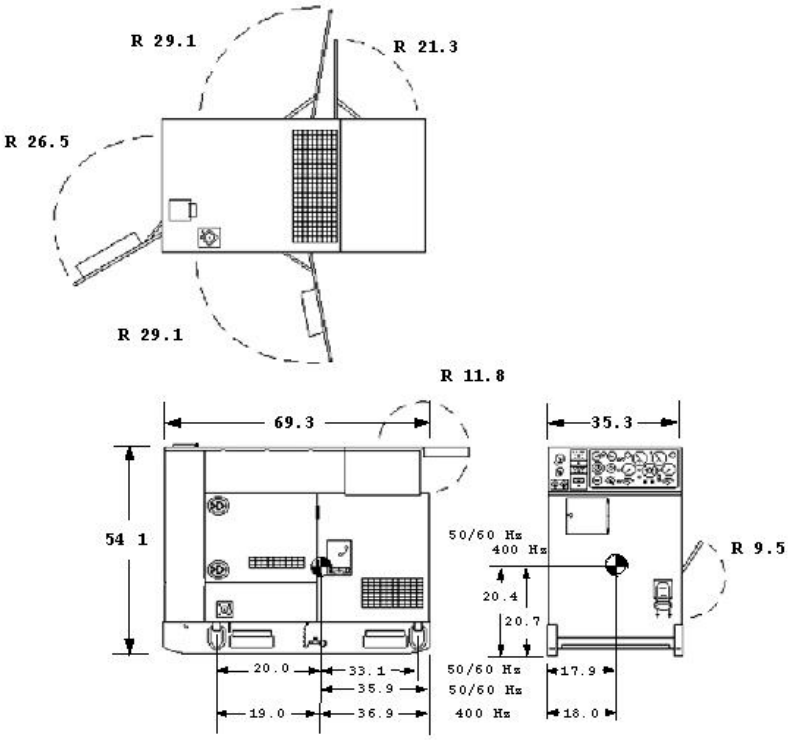

FIGURE C- 24 TQG Generator Set, DED, 15 kW

Source: https://assist.dla.mil -- Downloaded: 2016-12-11T08:30Z
Check the source to verify that this is the current version before use.

Identification Data			
Model	**NSN**	**LIN**	**SSN**
PU-800	6115-01-317-2137	G78203	R62700
Physical Characteristics			
Dimension: LWH (in)	**Ship Cube (ft^3)**	**Wet Weight (lbs)**	**Ship Weight (lbs)**
165 x 95 x 84	761	4975	4855
Documentation			
Technical Manual	**Specification**	**Camouflage Drawing**	**Top Assembly**
TM 9-6115-661-13&P	**NOT PROCURABLE**	97403-13228E1614	TA-13229E5735

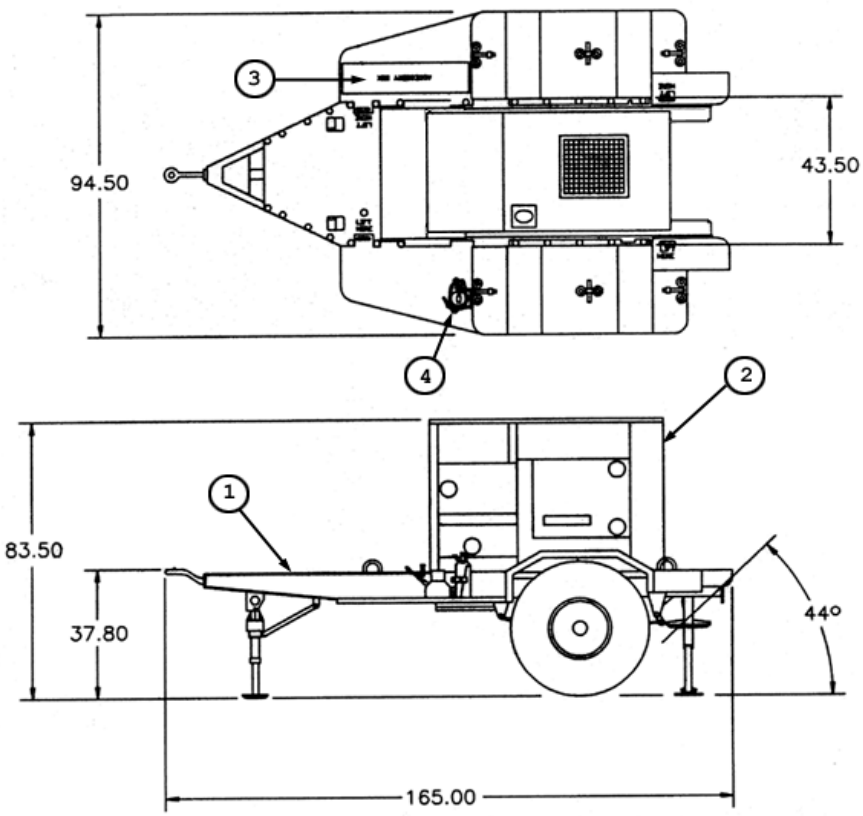

FIND	COMPONENT	QTY	IDENTIFIER
1	2 1/2 Ton modified Trailer, M200A1	1	97403-13229E9623
2	MEP-814A	1	6115-01-274-7393
3	Accessory box	1	97403-13229E7946
4	Fire extinguisher, 5 lb., A-A-1106	1	4210-00-270-4512

FIGURE C- 25 PU-800 - TQG Power Unit, 15 kW, 400 Hz

Source: https://assist.dla.mil -- Downloaded: 2016-12-11T08:30Z
Check the source to verify that this is the current version before use.

Identification Data			
Model	**NSN**	**LIN**	**SSN**
PU-801	6115-01-319-9033	G78374	R62700
Physical Characteristics			
Dimension: LWH (in)	**Ship Cube (ft^3)**	**Wet Weight (lbs)**	**Ship Weight (lbs)**
145 x 85 x 86	613	3416	3300
Documentation			
Technical Manual	**Specification**	**Camouflage Drawing**	**Top Assembly**
TM 9-6115-661-13&P	**NOT PROCURABLE**	97403-13228E1613	TA-13229E5640

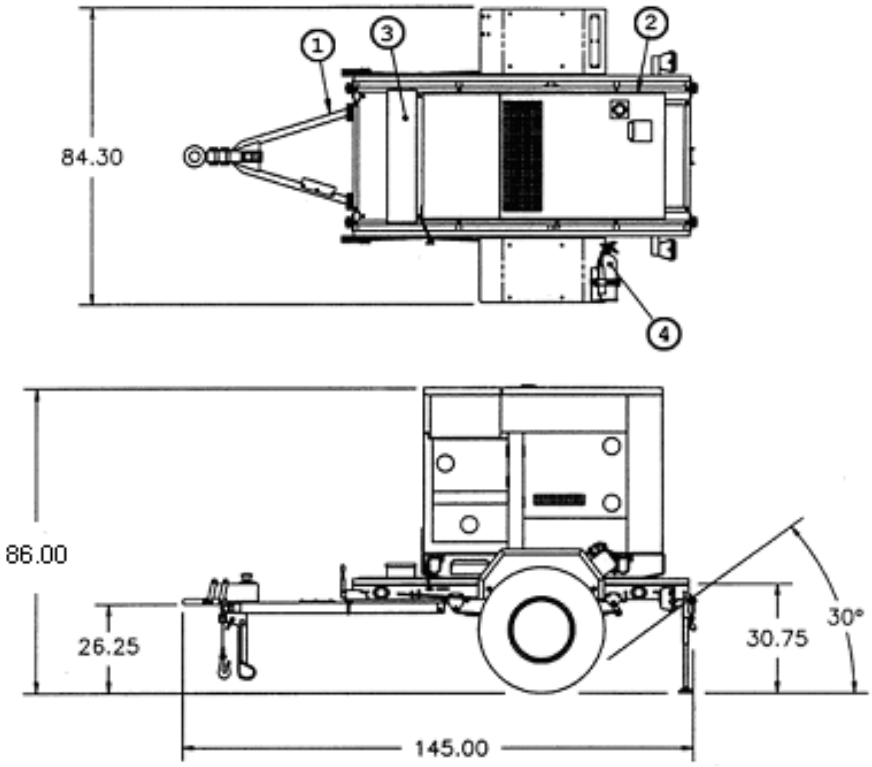

FIND	COMPONENT	QTY	IDENTIFIER
1	Modified 1 ton trailer, M116A3	1	97403-13229E5757
2	MEP-804A	1	6115-01-274-7388
3	Accessory box	1	97403-13229E7946
4	Fire extinguisher, 5 lb., A-A-1106	1	4210-00-270-4512

FIGURE C- 26 PU-801 - TQG Power Unit, 15 kW, 50/60 Hz

Source: https://assist.dla.mil -- Downloaded: 2016-12-11T08:30Z
Check the source to verify that this is the current version before use.

Identification Data			
Model	**NSN**	**LIN**	**SSN**
PU-801A	6115-01-413-3821	G78374	R62700
Physical Characteristics			
Dimension: LWH (in)	**Ship Cube (ft^3)**	**Wet Weight (lbs)**	**Ship Weight (lbs)**
135 x 86 x 91	611	3516	3400
Documentation			
Technical Manual	**Specification**	**Camouflage Drawing**	**Top Assembly**
TM 9-6115-661-13&P	**NOT PROCURABLE**	97403-13228E1613	TA-13230E6560

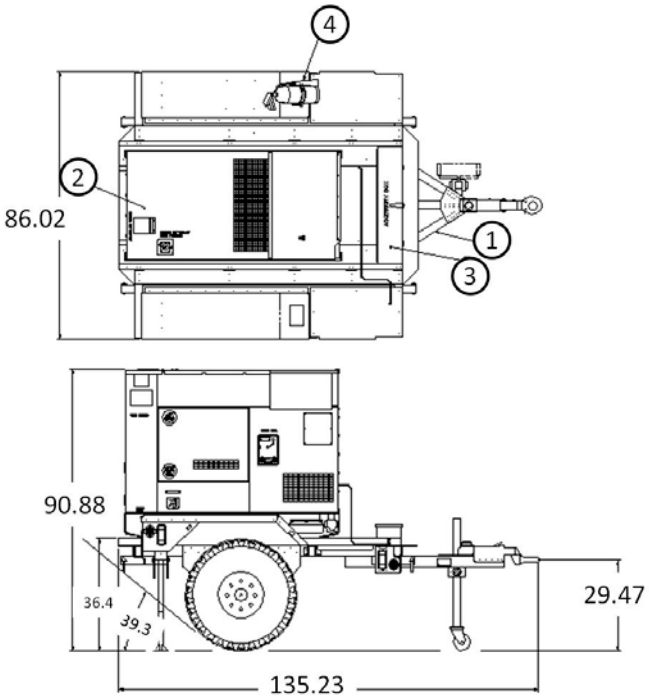

FIND	COMPONENT	QTY	IDENTIFIER
1	Light Tactical Trailer (LTT)	1	97403-13230E6565
2	MEP-804A	1	6115-01-274-7388
3	Accessory box	1	97403-13229E7946
4	Fire extinguisher, 5 lb., A-A-1106	1	4210-00-270-4512

FIGURE C- 27 PU-801A - TQG Power Unit, 15 kW, 50/60 Hz

Source: https://assist.dla.mil -- Downloaded: 2016-12-11T08:30Z
Check the source to verify that this is the current version before use.

Identification Data			
Model	**NSN**	**LIN**	**SSN**
PU-802	6115-01-317-2138	G53778	R62700
Physical Characteristics			
Dimension: LWH (in)	**Ship Cube (ft^3)**	**Wet Weight (lbs)**	**Ship Weight (lbs)**
165 x 95 x 84	754	5040	4920
Documentation			
Technical Manual	**Specification**	**Camouflage Drawing**	**Top Assembly**
TM 9-6115-661-13&P	**NOT PROCURABLE**	97403-13228E1614	TA-13229E5740

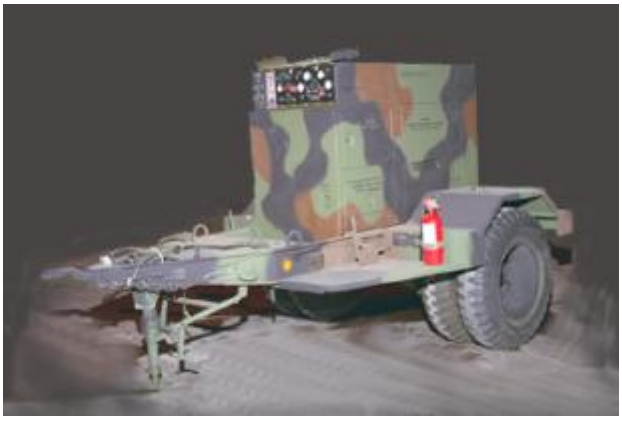

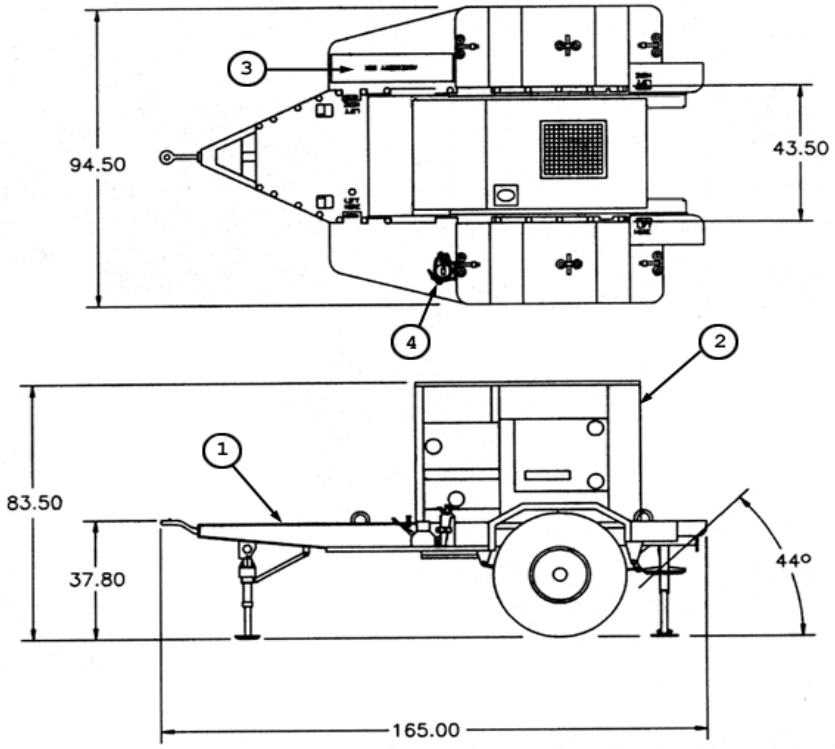

FIND	COMPONENT	QTY	IDENTIFIER
1	2-1/2 Ton modified trailer, M200A1	1	97403-13229E9632
2	MEP-804A	1	6115-01-274-7388
3	Accessory box	1	97403-13229E7946
4	Fire extinguisher, 5 lb., A-A-1106	1	4210-00-270-4512

FIGURE C- 28 PU-802 - TQG Power Unit, 15 kW, 50/60 Hz

Source: https://assist.dla.mil -- Downloaded: 2016-12-11T08:30Z
Check the source to verify that this is the current version before use.

Identification Data			
Model	**NSN**	**LIN**	**SSN**
PP-AN/MJQ-39	6115-01-299-6034	P42614	R62700
Physical Characteristics			
Dimension: LWH (in)	**Ship Cube (ft^3)**	**Wet Weight (lbs)**	**Ship Weight (lbs)**
165 x 95 x 84 each	754 each	Unit A: 4863 Unit B: 4893	Unit A: 4765 Unit B: 4765
Documentation			
Technical Manual	**Specification**	**Camouflage Drawing**	**Top Assembly**
TM 9-6115-661-13&P	**NOT PROCURABLE**	97403-13228E1614	TA-13229E5690

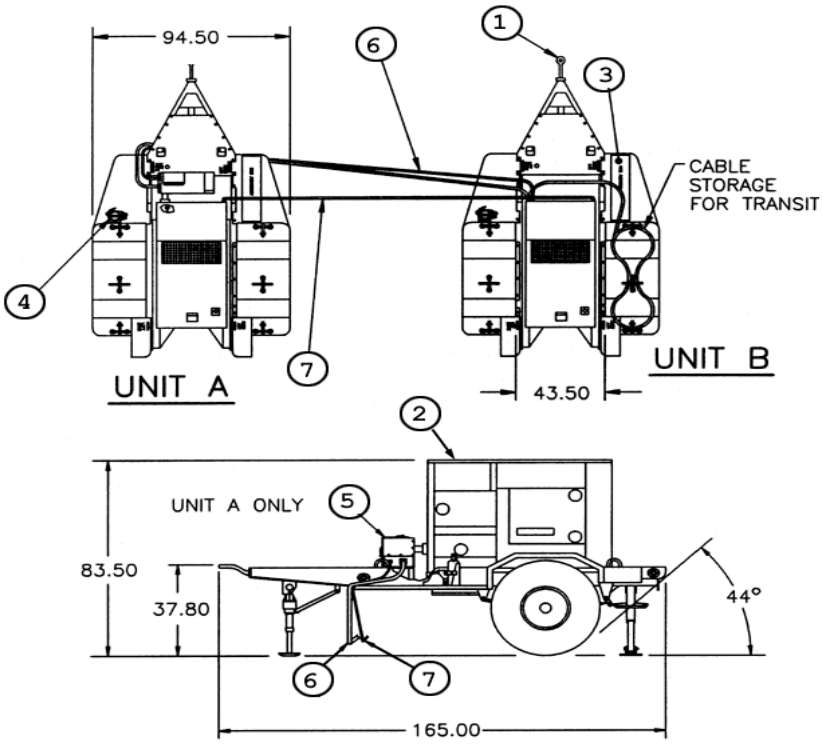

FIND	COMPONENT	QTY	IDENTIFIER
1	2-1/2 Ton modified trailer, M200A1	2	97403-13229E9632
2	MEP-814A	2	6115-01-274-7393
3	Accessory box	2	97403-13229E7946
4	Fire extinguisher, 5 lb., A-A-1106	2	4210-00-270-4512
5	Switch box (unit A)	1	97403-13229E5795-1
6	Cable assembly (unit B)	1	97403-13229E5674
7	Paralleling cable assembly	2	30554-88-22209

FIGURE C- 29 PP-AN/MJQ-39 - TQG Power Plant, 15 kW, 400 Hz

Source: https://assist.dla.mil -- Downloaded: 2016-12-11T08:30Z
Check the source to verify that this is the current version before use.

Identification Data			
Model	**NSN**	**LIN**	**SSN**
PP-AN/MJQ-48	6115-01-540-8433	P01012	R62700
Physical Characteristics			
Dimension: LWH (in)	**Ship Cube (ft^3)**	**Wet Weight (lbs)**	**Ship Weight (lbs)**
135 x 86 x 91 each	611 each	Unit A: 3570 Unit B: 3570	Unit A: 3470 Unit B: 3470
Documentation			
Technical Manual	**Specification**	**Camouflage Drawing**	**Top Assembly**
TM 9-6115-661-13&P	**NOT PROCURABLE**	97403-13228E1613	TA-13230E7015

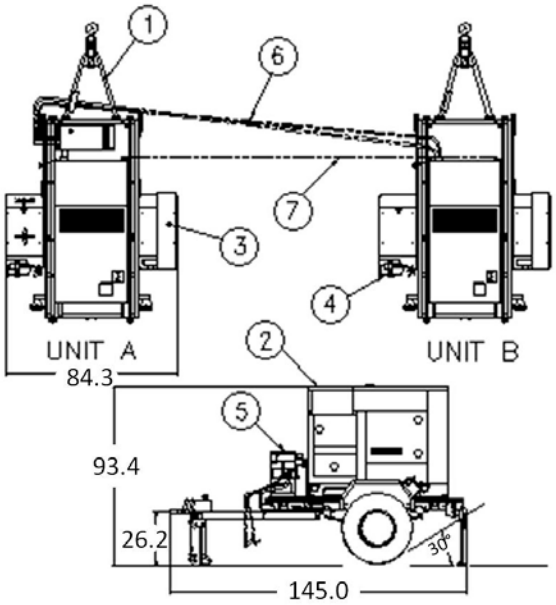

FIND	COMPONENT	QTY	IDENTIFIER
1	M116A3 Trailer	2	97403-13230E6829
2	MEP-804A	2	6115-01-274-7388
3	Accessory box	2	97403-13229E7946
4	Fire extinguisher, 5 lb., A-A-1106	2	4210-00-270-4512
5	Switch box (unit A)	1	97403-13229E5795-1
6	Cable assembly (unit B)	1	97403-13229E5674
7	Paralleling cable assembly	2	30554-88-22209

FIGURE C- 30 PP-AN/MJQ-48 - TQG Power Plant, 15 kW, 50/60 Hz

Source: https://assist.dla.mil -- Downloaded: 2016-12-11T08:30Z
Check the source to verify that this is the current version before use.

Identification Data			
Model	**NSN**	**LIN**	**SSN**
PP-AN/MJQ-48A	6115-01-540-9465	P01012	R62700
Physical Characteristics			
Dimension: LWH (in)	**Ship Cube (ft^3)**	**Wet Weight (lbs)**	**Ship Weight (lbs)**
135 x 86 x 91 each	611 each	Unit A: 3570, Unit B: 3570	Unit A: 3470, Unit B: 3470
Documentation			
Technical Manual	**Specification**	**Camouflage Drawing**	**Top Assembly**
TM 9-6115-661-13&P	**NOT PROCURABLE**	97403-13228E1614	TA-13230E7016

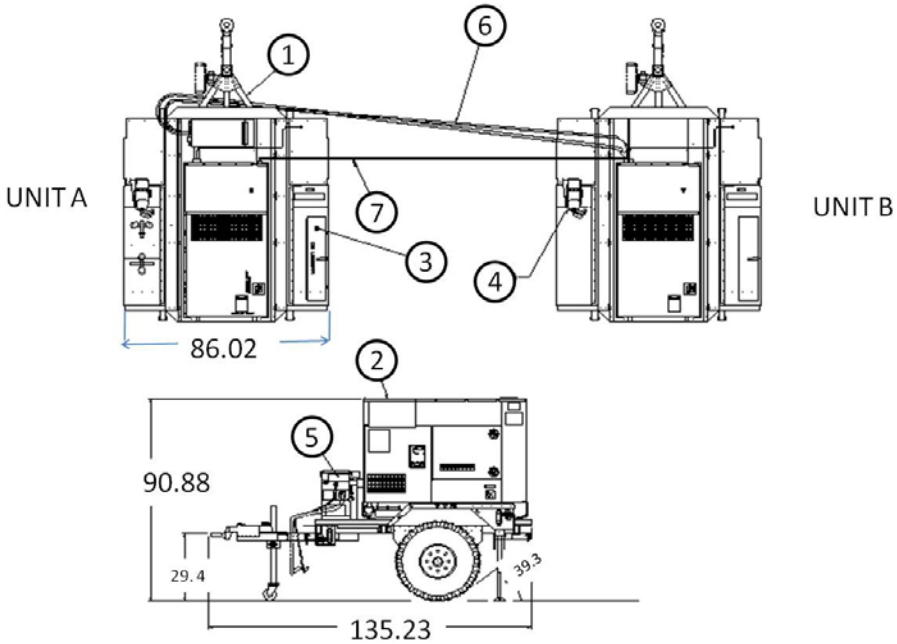

FIND	COMPONENT	QTY	IDENTIFIER
1	Light Tactical Trailer (LTT)	2	97403-13230E6565
2	MEP-804A	2	6115-01-274-7388
3	Accessory box	2	97403-13229E7946
4	Fire extinguisher, 5 lb., A-A-1106	2	4210-00-270-4512
5	Switch box (unit A)	1	97403-13229E5795-1
6	Cable assembly (unit B)	1	97403-13229E5674
7	Paralleling cable assembly	2	30554-88-22209

FIGURE C- 31 PP-AN/MJQ-48A - TQG Power Plant, 15 kW, 50/60 Hz

Source: https://assist.dla.mil -- Downloaded: 2016-12-11T08:30Z
Check the source to verify that this is the current version before use.

C.3.1.9 Tactical Quiet Generator Set, DED, 30 kW.

TABLE C- VIII Characteristic Data for MEP-805B and MEP-815B

Identification Data						
Model	MEP-805B			MEP-815B		
Description	30 kW TQG, 50/60 Hz, DED, Skid Mounted			30 kW TQG, 400 Hz, DED, Skid Mounted		
NSN	6115-01-461-9335			6115-01-462-0290		
LIN	G74575			G74643		
SSN	M53500			M53500		
Specification	MIL-DTL-53133/7			MIL-DTL-53133/8		
Trailer Configuration	PU-803B: FIGURE C- 33; PP-AN/MJQ-40B: FIGURE C- 35			PU-804B: FIGURE C- 34		
Physical Characteristics						
Dimensions & Ship Cube	80” x 36” x 55” & 92 ft^3					
Wet Weight (lbs)	3040			3060		
Engine	John Deere - Model: 4045TF151 4 cyl Turbo Diesel, 92 hp @ 1800 RPM, 24 VDC starter, liquid cooled. EPA certified.					
Instrumentation	Digital Display, Remote Monitoring Capable					
Fuels	Diesel DL-1, DL-2; Jet Fuel JP-8.					
Fuel Tank Capacity (Gal)	23					
Performance Characteristics						
Power Rating	30 kW (25 kW @ 50 Hz), 0.8 pf @ 4000 ft/120°F; Derate: 3.5%/1000 ft from 4000 to 8000 ft					
Environmental Capability	-25°F (-50°F W/kit) to 120°F, rain, humidity, altitude, sand/dust, transportation, cold storage: -60°F, salt spray, fungus, 15° incline.					
Protective Devices	Automatic shut down for overspeed and short circuit. Automatic shut down with emergency bypass for low oil pressure, high temperature, low fuel, and over-voltage. Drop load for under voltage, over current, and reverse power.					
Fuel consumption	2.7 gal/hour @ rated load			3.0 gal/hour @ rated load		
Human Factors	MIL-STD-1474					
Noise	70 dBA @ 7 meters (23 feet)					
Reliability (MTBF)	1638 hr @ 80% LCL			679 hr @ 80% LCL		
Maintenance Ratio	less than 0.05					
Electrical Characteristics						
Basic Design	Drip proof generator enclosure, fungus & moisture treated, solid state voltage regulator, solderless connectors, Marathon(50/60&400) or Marelli(50/60) synch. rotating field generator.					
EMI	Meets MIL-STD-461C, Part 9 UM04					
EMP	HAEMP IAW MIL-STD-2169					
Motor load	30% dip,.7 sec to 95% init volt			30% dip, .7 sec to 95% init volt		
Voltage Connection	120/208V, 3ph, 4 wire			240/416V, 3ph, 4 wire		
Frequency	**50 Hz**	**60 Hz**	**400 Hz**	**50 Hz**	**60 Hz**	**400 Hz**
Voltage adj. Range	190 – 213 V	197 - 240 V	197 - 229 V	380 – 426 V	395 - 480 V	395 - 458 V
Freq. adj. Range	± 2 Hz for 50/60 Hz			390 – 410 Hz for 400 Hz		

Electrical Performance					
Electric Power Quality		**MEP-805B**		**MEP-815B**	
		Frequency	**AC Voltage**	**Frequency**	**AC Voltage**
Regulation		0.25%	1%	0.25%	1%
Voltage modulation			1%		1%
Short term steady state stability (30 sec)		0.5% bandwidth	1% bandwidth	0.5% bandwidth	1% bandwidth
Long term steady state stability (4 hr)		1% bandwidth	2% bandwidth	1% bandwidth	2% bandwidth
Application of rated load	transient	4% under	15% dip	1.5% under	12% dip
	recovery time	2 sec	0.5 sec	1 sec	0.5 sec
Rejection of rated load	transient	4% over	15% rise	1.5% over	12% rise
	recovery time	2 sec	0.5 sec	1 sec	0.5 sec
Max waveform deviation factor			5%		5%
Individual waveform harmonic			2%		2%

Source: https://assist.dla.mil -- Downloaded: 2016-12-11T08:30Z
Check the source to verify that this is the current version before use.

TABLE C- VIII Characteristic Data for MEP-805B and MEP-815B Continued.

Optional Equipment			
Description	**NSN**	**Technical Bulletin**	**Effect on Dimensions (in)**
Winterization kit	6115-01-474-8354	TB 9-6115-644-13	None (internal)
Technical Manuals			
Army	**Air Force**	**Marine Corps**	**Navy**
TM 9-6115-671-14	TO 35C2-3-446-32	TM 09249A/09246A-14	
TM 9-6115-671-24P	TO 35C2-3-446-34	TM 09249A/09246A-24P/3	
TM 9-2815-259-24	TO 38BG1-125-2	TM 09249A/09246A-24	
TM 9-2815-259-24P	TO 38BG1-125-4	TM 09249A/2815-24P/4	
LO 9-6115-644-12			
TB 9-6115-671-24			

MEP-805B or MEP-815B

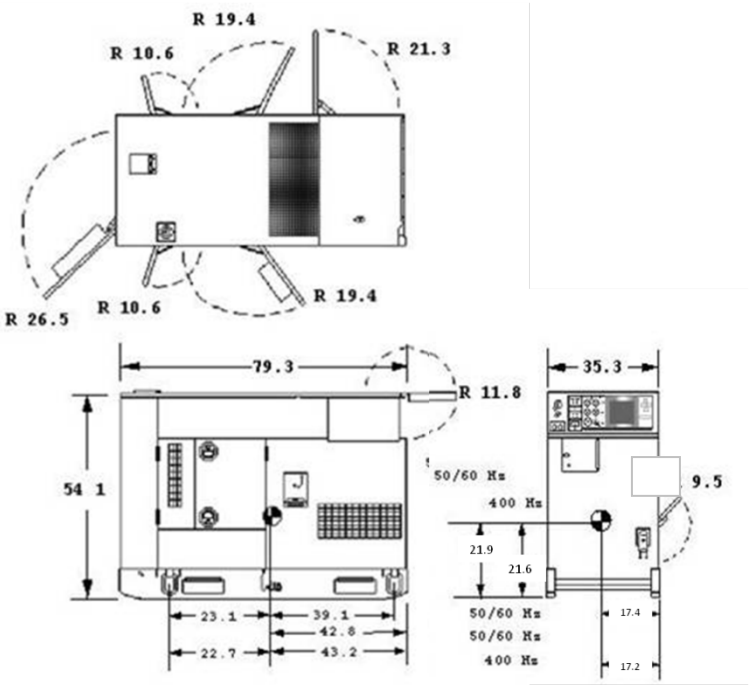

FIGURE C- 32 Tactical Quiet Generator Set, 30 kW (re-engine)

Source: https://assist.dla.mil -- Downloaded: 2016-12-11T08:30Z
Check the source to verify that this is the current version before use.

Identification Data			
Model	**NSN**	**LIN**	**SSN**
PU-803B	6115-01-470-6376	G35851	R62700
Physical Characteristic			
Dimension: LWH (in)	**Ship Cube (ft^3)**	**Wet Weight (lbs)**	**Ship Weight (lbs)**
165 x 95 x 85	771	5525	5320
Documentation			
Technical Manual	**Specification**	**Camouflage Drawing**	**Top Assembly**
TM 9-6115-662-13&P	MIL-P-53132/15	97403-13228E1615	TA-13230E6849

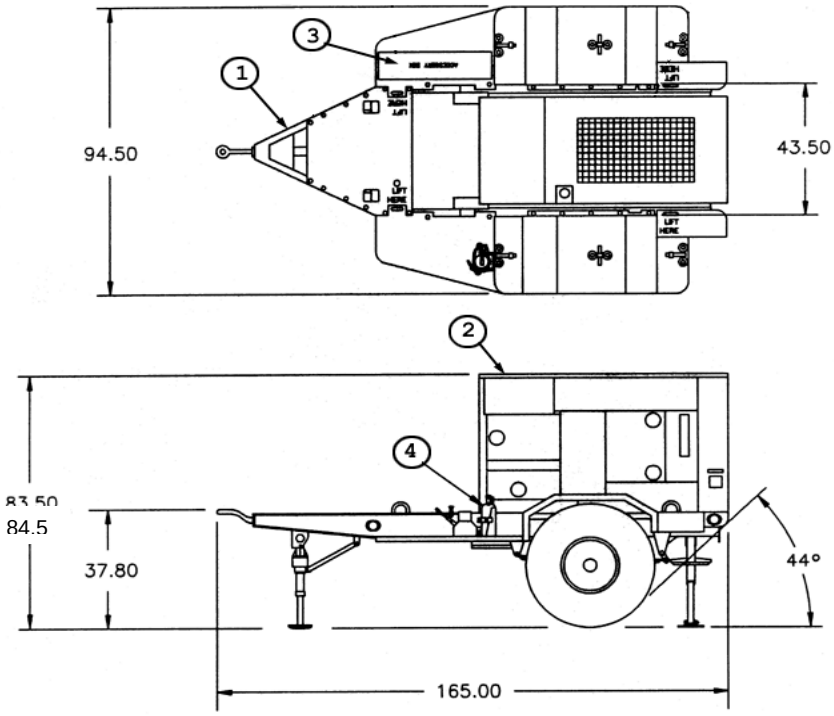

FIND NO.	COMPONENT	QTY	IDENTIFIER
1	2-1/2 Ton modified trailer, M200A1	1	97403-13229E9632
2	MEP-805B	1	6115-01-461-9335
3	Accessory box	1	97403-13229E7946
4	Fire extinguisher, 5 lb., A-A-1106	1	4210-00-270-4512

FIGURE C- 33 PU-803B - TQG Power Unit, 30 kW, 50/60 Hz

Source: https://assist.dla.mil -- Downloaded: 2016-12-11T08:30Z
Check the source to verify that this is the current version before use.

Identification Data			
Model	**NSN**	**LIN**	**SSN**
PU-804B	6115-01-471-1507	G35919	R62700
Physical Characteristic			
Dimension: LWH (in)	**Ship Cube (ft^3)**	**Wet Weight (lbs)**	**Ship Weight (lbs)**
165 x 95 x 85	771	5545	5340
Documentation			
Technical Manual	**Specification**	**Camouflage Drawing**	**Top Assembly**
TM 9-6115-662-13&P	MIL-P-53132/16	97403-13228E1615	TA-13230E6850

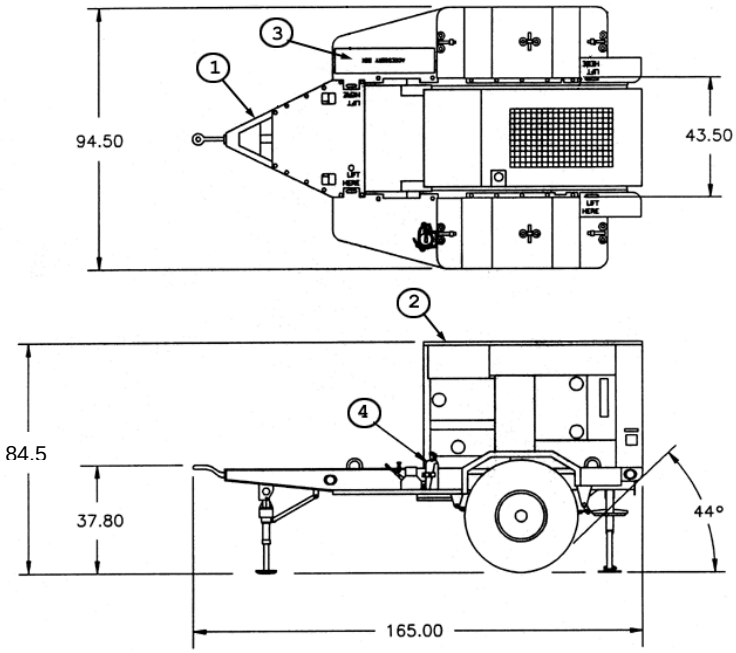

FIND NO.	COMPONENT	QTY	IDENTIFIER
1	2-1/2 Ton modified trailer, M200A1	1	97403-13229E9632
2	MEP-815B	1	6115-01-462-0290
3	Accessory box	1	97403-13229E7946
4	Fire extinguisher, 5 lb., A-A-1106	1	4210-00-270-4512

FIGURE C- 34 PU-804B - TQG Power Unit, 30 kW, 400 Hz

Source: https://assist.dla.mil -- Downloaded: 2016-12-11T08:30Z
Check the source to verify that this is the current version before use.

Identification Data			
Model	**NSN**	**LIN**	**SSN**
PP-AN/MJQ-40B	6115-01-474-3783	P42126	R62700
Physical Characteristic			
Dimension: LWH (in)	**Ship Cube (ft^3)**	**Wet Weight (lbs)**	**Ship Weight (lbs)**
165 x 95 x 85 each	771 each	Unit A: 5590 Unit B: 5590	Unit A: 5390 Unit B: 5390
Documentation			
Technical Manual	**Specification**	**Camouflage Drawing**	**Top Assembly**
TM 9-6115-662-13&P	MIL-P-53132/14	97403-13228E1615	TA-13230E6853

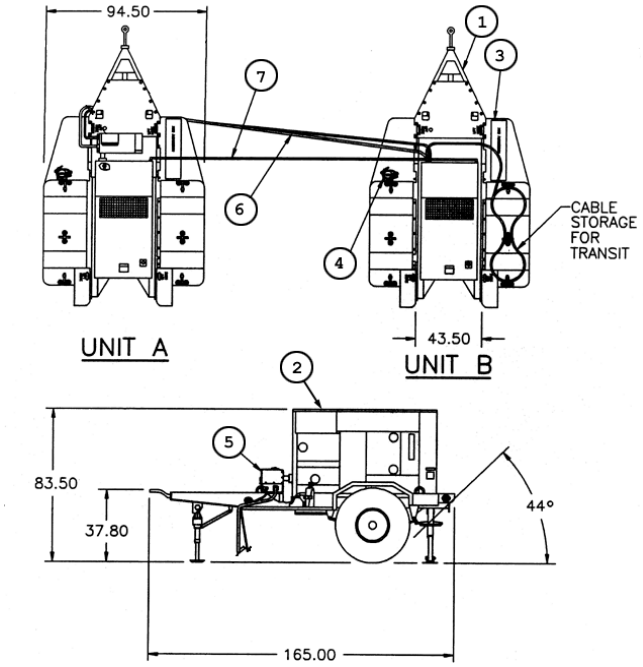

FIND NO.	COMPONENT	QTY	IDENTIFIER
1	2-1/2 Ton modified trailer, M200A1	2	97403-13229E9632
2	MEP-805B	2	6115-01-461-9335
3	Accessory box	2	97403-13229E7946
4	Fire extinguisher, 5 lb., A-A-1106	2	4210-00-270-4512
5	Switch box (unit A)	1	97403-13229E5795-2
6	Cable assembly (unit B)	1	97403-13229E5738
7	Paralleling cable assembly	2	30554-88-22209

FIGURE C- 35 PP-AN/MJQ-40B - TQG Power Plant, 30 kW, 50/60 Hz

Source: https://assist.dla.mil -- Downloaded: 2016-12-11T08:30Z
Check the source to verify that this is the current version before use.

This Page Intentionally Left Blank

Source: https://assist.dla.mil -- Downloaded: 2016-12-11T08:30Z
Check the source to verify that this is the current version before use.

C.3.1.10 TQG Generator Set, DED, 30 kW.

TABLE C- IX Characteristic Data for MEP-805A and MEP-815A

Identification Data						
Model	MEP-805A			MEP-815A		
Description	Gen Set, 30kW, DED, 50/60 Hz			Gen Set, 30kW, DED, 400 Hz		
NSN	6115-01-274-7389			6115-01-274-7394		
LIN	G74575			G74643		
SSN	M532			M50100		
Specification	**NOT PROCURABLE** (MIL-DTL-53133/7)			**NOT PROCURABLE** (MIL-DTL-53133/8)		
Trailer Configuration	PU-803: FIGURE C- 37; PP-AN/MJQ-40:FIGURE C- 39			PU-804: FIGURE C- 38		
Physical Characteristics						
Dimensions LWH (in)	79.3 x 35.3 x 54.1					
Ship Cube (ft^3)	88					
Wet Weight (lbs)	3006			3015		
Engine	John Deer -Model: 4039T 4 cyl Turbo Diesel, 92 hp@1800 RPM, 24VDC starter, liquid cooled.					
Instrumentation	On/off switch, Hour, volt, frequency, oil pressure, coolant temperature.					
Fuels	Diesel DL-1, DL-2 and jet fuel JP-8, Jet A-1.					
Fuel Tank Capacity (Gal)	23					
Performance Characteristics						
Power Rating	30kW, 0.8 power factor @ 4000ft/120°F. Derate: 3.5%/1000 ft (4000 - 8000 ft). Max Power: 110% of rated power.					
Environmental Capability	-25°F - 120°F, rain, humidity, altitude, sand/dust, transportation, cold storage: -60°F, salt spray, fungus.					
Protective Devices	Automatic shut down with emergency bypass for low oil pressure, coolant high temperature, overspeed, and overvoltage.					
Fuel consumption	2.43 gal/hour			2.69 gal/hour		
Human Factors	MIL-STD-1474.					
Noise	70 dBA @ 7 meters (23 feet).					
Reliability (MTBF)	600 hr MTBOMF			510 hr MTBOMF		
Maintenance Ratio	less than 0.05					
Basic Design	Drip proof generator enclosure, fungus & moisture treated, solid state voltage regulator, solderless connectors, Marathon Electric synchronous rotating field generator.					
EMI	Suppressed to MIL-STD-461 limits.					
EMP	HAEMP IAW MIL-STD-2169.					
Motor load	30% (25%- 400) dip /0.7 sec to 95% int V					
Voltage Connection	120/208 V, 3 phase, 4 wire			240/416 V, 3 phase, 4 wire		
Frequency	**50 Hz**	**60 Hz**	**400 Hz**	**50 Hz**	**60 Hz**	**400 Hz**
Voltage adj. Range	190-213 V	197-240 V	197-229 V	380-426 V	395-480 V	395-458 V
Freq. adj. Range	± 2 Hz for 50/60 Hz			390-420 Hz for 400 Hz		

Electrical Performance					
Electric Power Quality		**MEP-805A**		**MEP-815A**	
		Frequency	**AC Voltage**	**Frequency**	**AC Voltage**
Regulation		0.25%	1%	0.25%	1%
Voltage modulation			1%		1%
Short term steady state stability (30 sec)		0.5% bandwidth	1% bandwidth	0.5% bandwidth	1% bandwidth
Long term steady state stability (4 hr)		1% bandwidth	1% bandwidth	1% bandwidth	1% bandwidth
Application of rated load	transient	4% under	15% dip	1.5% under	15% dip
	recovery time	2 sec	0.5 sec	1 sec	0.5 sec
Rejection of rated load	transient	4% over	15% rise	1.5% over	15% rise
	recovery time	2 sec	0.5 sec	1 sec	0.5 sec
Max waveform deviation factor			5%		5%
Individual waveform harmonic			2%		2%

Source: https://assist.dla.mil -- Downloaded: 2016-12-11T08:30Z
Check the source to verify that this is the current version before use.

TABLE C- IX Characteristic Data for MEP-805A and MEP-815A Continued.

Optional Equipment			
Description	**NSN**	**Weight (lbs)**	**Effect on Dimensions (in)**
None			
Technical Manuals			
Army	**Air Force**	**Marine Corps**	**Navy**
TM 9-6115-644-10	TO 35C2-3-446-11	TM 09249A/0924A-10/2	
TM 9-6115-644-24	TO 35C2-3-446-12	TM 09249A/09246A-24/2	
LO 9-6115-644-12			
TB 9-6115-644-24			

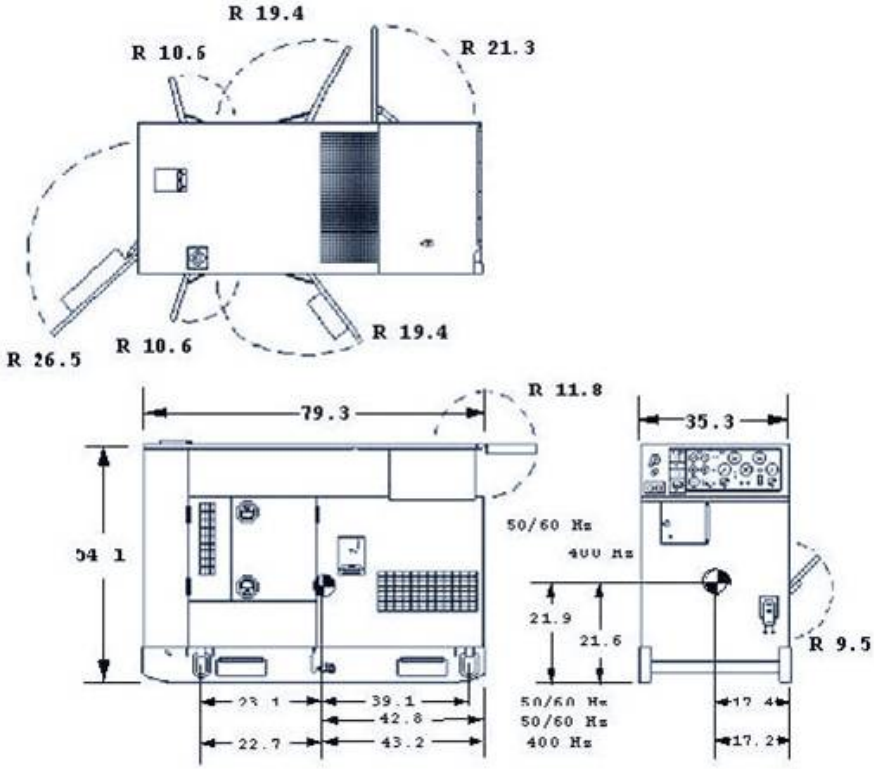

FIGURE C- 36 TQG Generator Set, DED, 30 kW

Source: https://assist.dla.mil -- Downloaded: 2016-12-11T08:30Z
Check the source to verify that this is the current version before use.

Identification Data			
Model	**NSN**	**LIN**	**SSN**
PU-803	6115-01-317-2136	G35851	M54300
Physical Characteristics			
Dimension: LWH (in)	**Ship Cube (ft^3)**	**Wet Weight (lbs)**	**Ship Weight (lbs)**
165.0 x 94.5 x 83.5	770	5900	6380
Documentation			
Technical Manual	**Specification**	**Camouflage Drawing**	**Top Assembly**
	NOT PROCURABLE	97403-13228E1615	TA-13229E5745

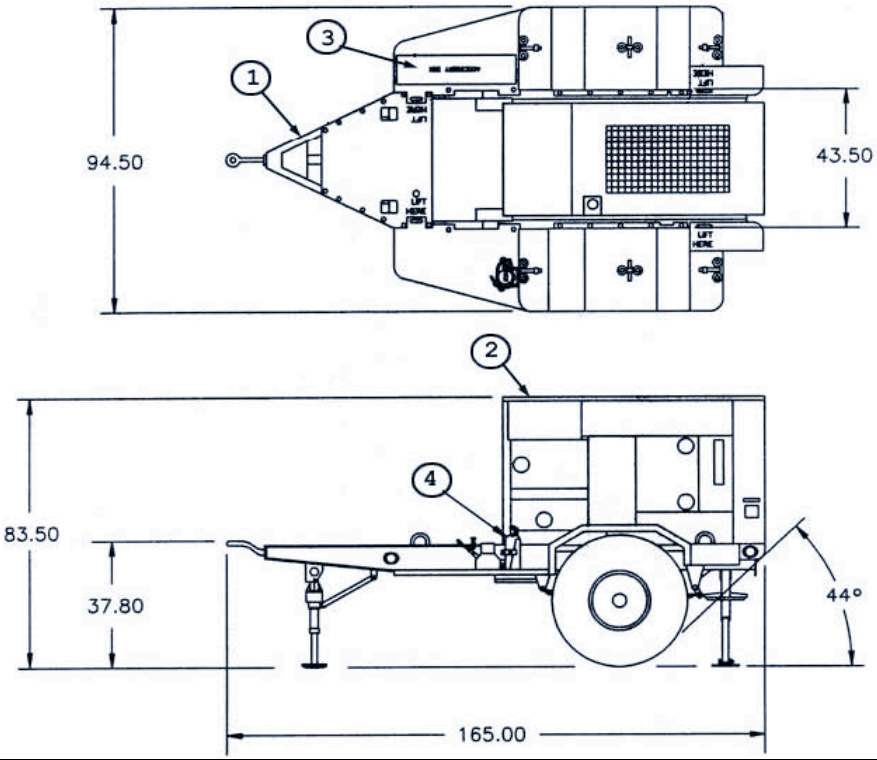

FIND	COMPONENT	QTY	IDENTIFIER
1	2-1/2 Ton modified trailer, M200A1	1	97403-13214E1257
2	MEP-805A	1	6115-01-274-7389
3	Accessory box	1	97403-13229E7946
4	Fire extinguisher, 5 lb., A-A-1106	1	4210-00-270-4512

FIGURE C- 37 PU-803 - TQG Power Unit, DED, 30kW, 50/60 Hz

Source: https://assist.dla.mil -- Downloaded: 2016-12-11T08:30Z
Check the source to verify that this is the current version before use.

Identification Data			
Model	**NSN**	**LIN**	**SSN**
PU-804	6115-01-317-2135	G35919	M59500
Physical Characteristics			
Dimension: LWH (in)	**Ship Cube (ft^3)**	**Wet Weight (lbs)**	**Ship Weight (lbs)**
165.0 x 94.5 x 83.5	770	5730	5930
Documentation			
Technical Manual	**Specification**	**Camouflage Drawing**	**Top Assembly**
	NOT PROCURABLE	97403-13228E1615	TA-13229E5750

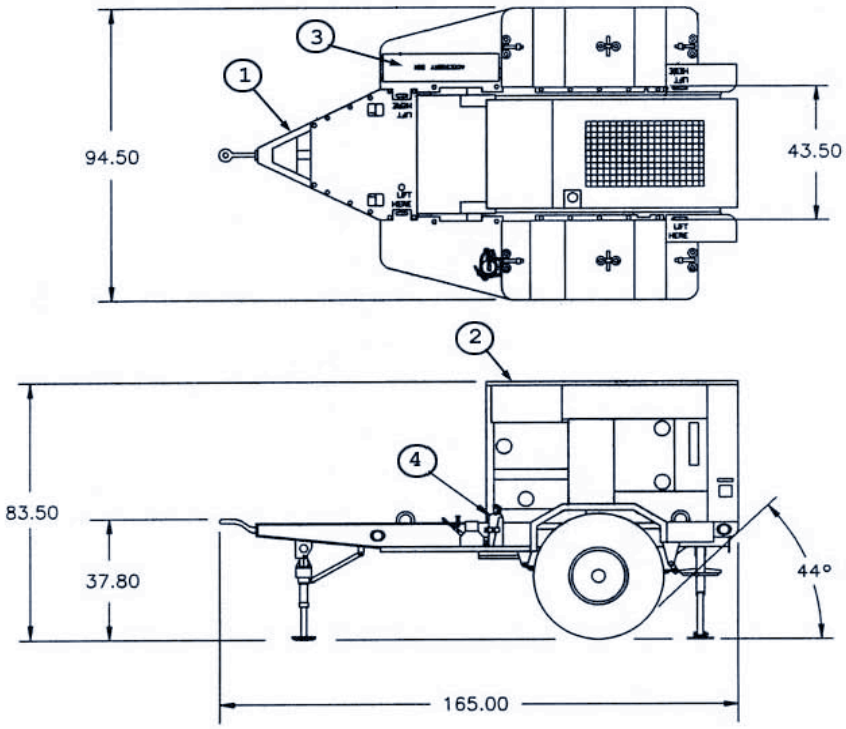

FIND	COMPONENT	QTY	IDENTIFIER
1	2-1/2 Ton modified trailer, M200A1	1	97403-13214E1257
2	MEP-815A	1	6115-01-274-7394
3	Accessory box	1	97403-13229E7946
4	Fire extinguisher, 5 lb., A-A-1106	1	4210-00-270-4512

FIGURE C- 38 PU-804 - TQG Power Unit, DED, 30kW, 400 Hz

Source: https://assist.dla.mil -- Downloaded: 2016-12-11T08:30Z
Check the source to verify that this is the current version before use.

Identification Data			
Model	**NSN**	**LIN**	**SSN**
AN/MJQ-40	6115-01-299-6033	P42126	M51900
Physical Characteristics			
Dimension: LWH (in)	**Ship Cube (ft^3)**	**Wet Weight (lbs)**	**Ship Weight (lbs)**
165.0x94.5x83.5 (each)	770 (2x)	Unit A: 5700 Unit B: 5740	Unit A: 6700 Unit B: 6740
Documentation			
Technical Manual	**Specification**	**Camouflage Drawing**	**Top Assembly**
	NOT PROCURABLE	97403-13228E1615	TA-13229E5700

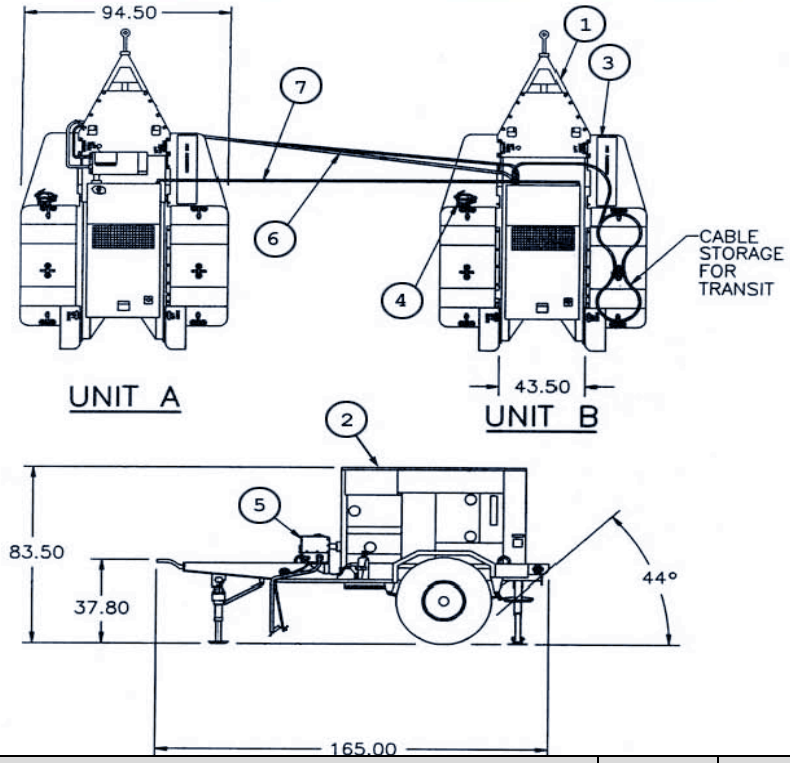

FIND	COMPONENT	QTY	IDENTIFIER
1	2-1/2 Ton modified trailer, M200A1	2	97403-13214E1257
2	MEP-805A	2	6115-01-274-7389
3	Accessory box	2	97403-13229E7946
4	Fire extinguisher, 5 lb., A-A-1106	2	4210-00-270-4512
5	Switch box (unit A)	1	97403-13229E5795
6	Cable assembly (unit B)	1	97403-13229E5738
7	Paralleling cable assembly	2	30554-88-22209

FIGURE C- 39 PP-AN/MJQ-40 - TQG Power Plant, DED, 30kW, 50/60 Hz

Source: https://assist.dla.mil -- Downloaded: 2016-12-11T08:30Z
Check the source to verify that this is the current version before use.

C.3.1.11 Tactical Quiet Generator Set, DED, 60 kW.

TABLE C- X Characteristic Data for MEP-806B and MEP-816B

Identification Data		
Model	MEP-806B	MEP-816B
Description	60 kW TQG, 50/60 Hz, DED, Skid Mtd	60 kW TQG, 400 Hz, DED, Skid Mtd
NSN	6115-01-462-0291	6115-01-462-0292
LIN	G12034	G18052
SSN	M53500	M53500
Specification	MIL-DTL-53133/9	MIL-DTL-53133/10
Trailer Configuration	PU-805B: FIGURE C- 41; PP-AN/MJQ-41B: FIGURE C- 43; PP-AN/MJQ-1612B: FIGURE C- 44	PU-806B: FIGURE C- 42; PP-AN/MJQ-1632B: FIGURE C- 45
Physical Characteristics		
Dimensions & Ship Cube	87” x 36” x 59” & 107 ft^3	
Wet Weight (lbs)	4200	4240
Engine	John Deere 6068TF151 6 cylinder, 4 cycle Turbo Diesel, 134 horsepower @ 1800 RPM, 24 VDC starter, liquid cooled, electronic governor. EPA certified	
Instrumentation	Digital controls, Remote Monitoring Capable	
Fuel & Fuel Tank Capacity	Diesel DL-1, DL-2; Jet Fuel JP-8 & 43 gallons	
Performance Characteristics		
Power Rating	60kW (50kW @ 50Hz), 0.8 pf@ 4000ft/120°F; Derate: 3.5%/1000ft from 4000 to 10000ft	
Environmental Capability	-25°F (-50°F With Winterization Kit) to 120°F, rain, humidity, altitude, sand/dust, transportation, cold storage: -60°F, salt spray, fungus, 15° incline.	
Protective Devices	Automatic shut down for overspeed and short circuit. Automatic shut down with emergency bypass for low oil pressure, high temperature, low fuel, and over-voltage. Drop load for under voltage, over current, and reverse power.	
Fuel consumption	4.7 gal/hour @ rated load	4.9 gal/hour @ rated load
Human Factors	MIL-STD-1474	
Noise	70 dBA @ 7 meters (23 feet)	
Reliability (MTBF)	606 hr @ 80% LCL	542 hr @ 80% LCL
Maintenance Ratio	less than 0.05	

Electrical Characteristics						
Basic Design	Drip proof generator enclosure, fungus & moisture treated, solid state voltage regulator, solderless connectors, Marathon (60Hz)/Marelli (400 Hz) a brushless generator.					
EMI	Meets MIL-STD-461C Part 9					
EMP	HAEMP IAW MIL-STD-2169					
Motor load	30% dip, .7 sec to 95% init volt			25% dip, .7 sec to 95% init volt		
Voltage Connection	120/208V, 3ph, 4 wire			240/416V, 3ph, 4 wire		
Frequency	**50 Hz**	**60 Hz**	**400 Hz**	**50 Hz**	**60 Hz**	**400 Hz**
Voltage adj. Range	190 – 213 V	197 - 240 V	197 - 229 V	380 – 426 V	395 - 480 V	395 - 458 V
Freq. adj. Range	± 2 Hz for 50/60 Hz			390 - 410 Hz		

Electrical Performance					
Electric Power Quality		**MEP-806B**		**MEP-816B**	
		Frequency	**AC Voltage**	**Frequency**	**AC Voltage**
Regulation		0.25%	1%	0.25%	1%
Voltage modulation			1%		1%
Short term steady state stability (30 sec)		0.5% bandwidth	1% bandwidth	0.5% bandwidth	1% bandwidth
Long term steady state stability (4 hr)		1% bandwidth	2% bandwidth	1% bandwidth	2% bandwidth
Application of rated load	transient	4% under	15% dip	1.5% under	15% dip
	recovery time	2 sec	0.5 sec	1 sec	0.5 sec
Rejection of rated load	transient	4% over	15% rise	1.5% over	15% rise
	recovery time	2 sec	0.5 sec	2 sec	0.5 sec
Max waveform deviation factor			5%		5%
Individual waveform harmonic			2%		2%

Source: https://assist.dla.mil -- Downloaded: 2016-12-11T08:30Z
Check the source to verify that this is the current version before use.

TABLE C- X Characteristic Data for MEP-806B and MEP-816B Continued.

Optional Equipment			
Description	**NSN**	**Technical Bulletin**	**Effect on Dimensions (in)**
Winterization kit	6115-01-496-7710	TB 9-6115-645-13	None (internal)
Technical Manuals			
Army	**Air Force**	**Marine Corps**	**Navy**
TM 9-6115-672-14	TO 35C2-3-444-32	TM 09244A/09245A-14	
TM 9-6115-672-24P	TO 35C2-3-444-34	TM 09244A/09245A-24P/3	
TM 9-2815-260-24	TO 38G1-126-2	TM 09244A/09245-24	
TM 9-2815-260-24P	TO 38G1-126-4	TM 09244A/2815-24P/4	
LO 9-6115-645-12			
TB 9-6115-672-24			

MEP-806B or MEP-816B

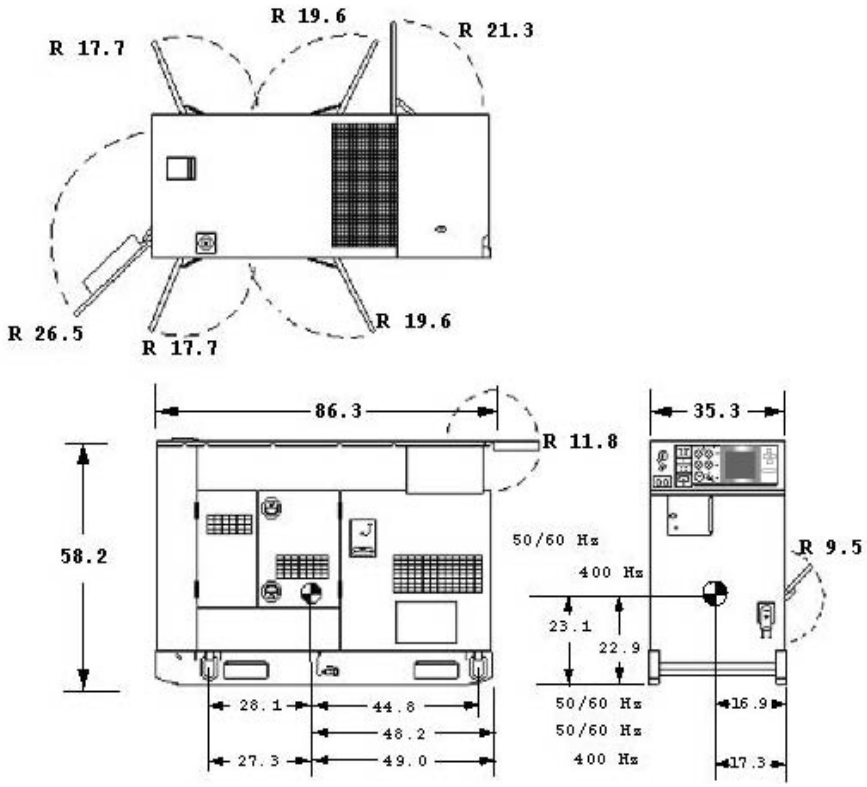

FIGURE C- 40 Tactical Quiet Generator Set, DED, 60 kW (re-engine)

Source: https://assist.dla.mil -- Downloaded: 2016-12-11T08:30Z
Check the source to verify that this is the current version before use.

Identification Data			
Model	**NSN**	**LIN**	**SSN**
PU-805B	6115-01-471-1508	G78306	R62700
Physical Characteristics			
Dimension: LWH (in)	**Ship Cube (ft^3)**	**Wet Weight (lbs)**	**Ship Weight (lbs)**
165 x 95 x 88	798	6820	6460
Documentation			
Technical Manual	**Specification**	**Camouflage Drawing**	**Top Assembly**
TM 9-6115-663-13&P	MIL-P-53132/18	97403-13228E1616	TA-13230E6851

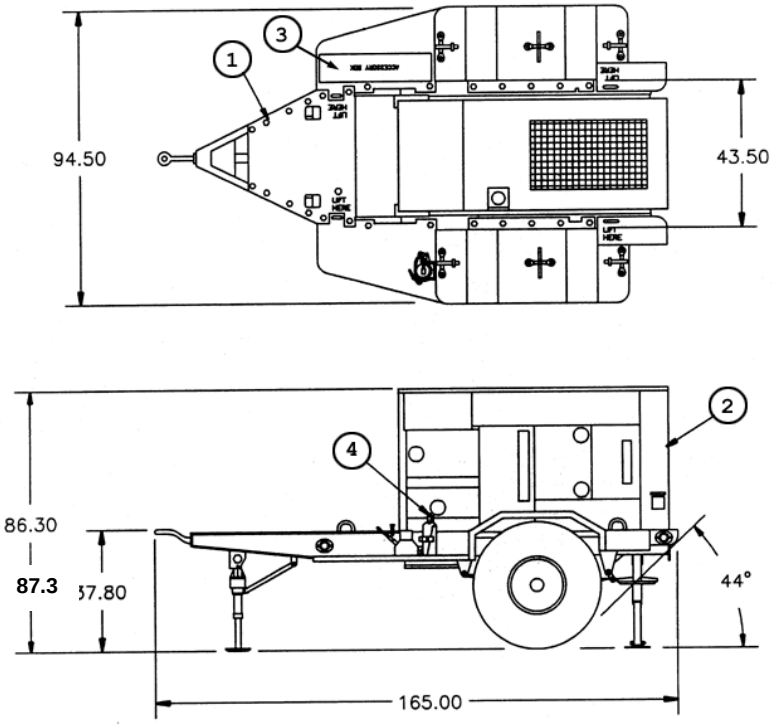

FIND NO.	COMPONENT	QTY	IDENTIFIER
1	2-1/2 Ton modified trailer, M200A1	1	97403-13229E9632
2	MEP-806B	1	6115-01-462-0291
3	Accessory box	1	97403-13229E7946
4	Fire extinguisher, 5 lb., A-A-1106	1	4210-00-270-4512

FIGURE C- 41 PU-805B - TQG Power Unit, 60 kW, 50/60 Hz

Source: https://assist.dla.mil -- Downloaded: 2016-12-11T08:30Z
Check the source to verify that this is the current version before use.

Identification Data			
Model	**NSN**	**LIN**	**SSN**
PU-806B	6115-01-471-1506	G17460	R62700
Physical Characteristics			
Dimension: LWH (in)	**Ship Cube (ft^3)**	**Wet Weight (lbs)**	**Ship Weight (lbs)**
165 x 95 x 88	798	6860	6500
Documentation			
Technical Manual	**Specification**	**Camouflage Drawing**	**Top Assembly**
TM 9-6115-663-13&P	MIL-P-53132/19	97403-13228E1616	TA-13230E6852

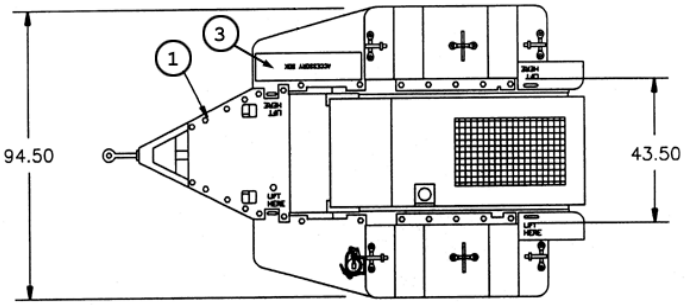

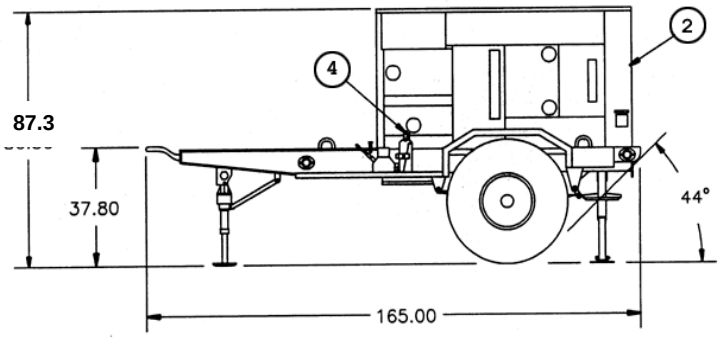

FIND NO.	COMPONENT	QTY	IDENTIFIER
1	2-1/2 Ton modified trailer, M200A1	1	97403-13229E9632
2	MEP-816B	1	6115-01-462-0292
3	Accessory box	1	97403-13229E7946
4	Fire extinguisher, 5 lb., A-A-1106	1	4210-00-270-4512

FIGURE C- 42 PU-806B - TQG Power Unit, 60 kW, 400 Hz

Source: https://assist.dla.mil -- Downloaded: 2016-12-11T08:30Z
Check the source to verify that this is the current version before use.

Identification Data			
Model	**NSN**	**LIN**	**SSN**
PP-AN/MJQ-41B	6115-01-474-3776	P42194	R62700
Physical Characteristics			
Dimension: LWH (in)	**Ship Cube (ft^3)**	**Wet Weight (lbs)**	**Ship Weight (lbs)**
165 x 95 x 88 each	798 each	Unit A: 6880 Unit B: 6900	Unit A: 6440 Unit B: 6460
Documentation			
Technical Manual	**Specification**	**Camouflage Drawing**	**Top Assembly**
TM 9-6115-663-13&P	MIL-P-53132/17	97403-13228E1616	TA-13230E6854

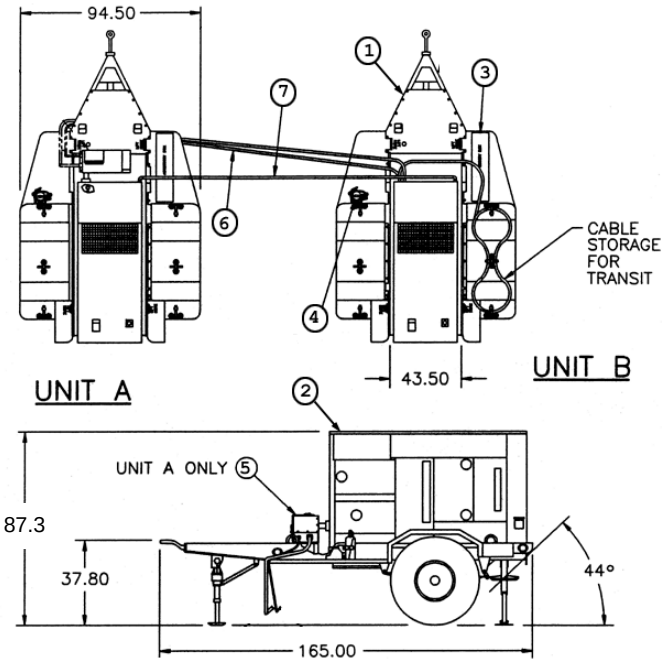

FIND NO.	COMPONENT	QTY	IDENTIFIER
1	2-1/2 Ton modified trailer, M200A1	2	97403-13229E9632
2	MEP-806B	2	6115-01-462-0291
3	Accessory box	2	97403-13229E7946
4	Fire extinguisher, 5 lb., A-A-1106	2	4210-00-270-4512
5	Switch box (unit A)	1	97403-13229E5795-3
6	Cable assembly (unit B)	1	97403-13229E5741
7	Paralleling cable assembly	2	30554-88-22209

FIGURE C- 43 PP-AN/MJQ-41B - TQG Power Plant, 60 kW, 50/60 Hz

Source: https://assist.dla.mil -- Downloaded: 2016-12-11T08:30Z
Check the source to verify that this is the current version before use.

Identification Data			
Model	**NSN**	**LIN**	**SSN**
PP-AN/MJQ-1612	6115-01-349-1536		M510
Physical Characteristics			
Dimension: LWH (in)	**Ship Cube (ft^3)**	**Wet Weight (lbs)**	**Ship Weight (lbs)**
222.6 x 96.0 x 96.0	1209	14700	15800
Documentation			
Technical Manual	**Specification**	**Camouflage Drawing**	**Top Assembly**
		97403-13228E1617	TA-13229E9635

NOT TYPE CLASSIFIED FOR ARMY USE

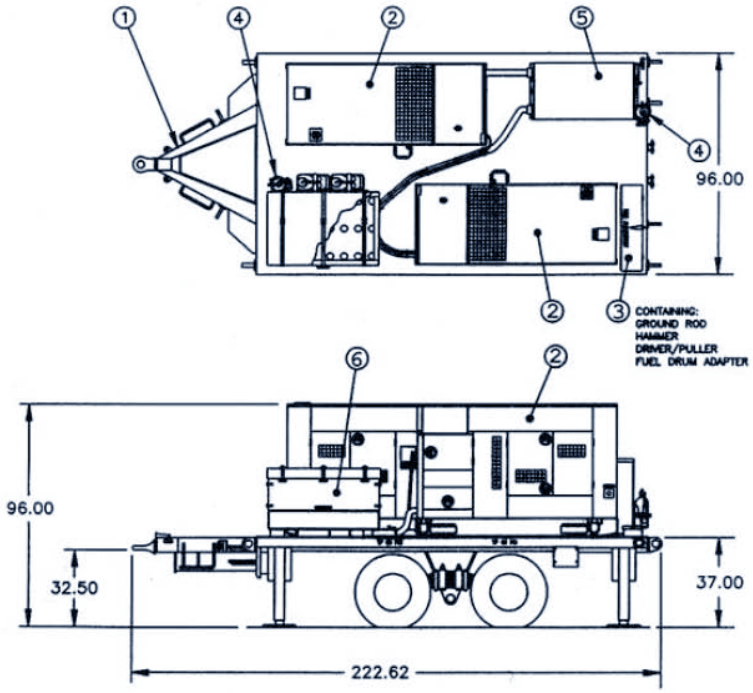

FIND NO.	COMPONENT	QTY	IDENTIFIER
1	AF Trailer Generator Assembly, M1061A1	1	2330-01-573-0985
2	MEP-806B	2	6115-01-462-0291
3	Accessory box	1	97403-13229E7946
4	Fire extinguisher, 5 lb., A-A-1106	2	4210-00-270-4512
5	Switch box	1	97403-13230E4550
6	Cable storage box	1	97403-13230E4580

FIGURE C- 44 PP-AN/MJQ-1612 - TQG Power Plant, DED, 60kW, 50/60 Hz, Air Force PP

Source: https://assist.dla.mil -- Downloaded: 2016-12-11T08:30Z
Check the source to verify that this is the current version before use.

Identification Data			
Model	**NSN**	**LIN**	**SSN**
PP-AN/MJQ-1632	6115-01-346-0157		M510
Physical Characteristics			
Dimension: LWH (in)	**Ship Cube (ft^3)**	**Wet Weight (lbs)**	**Ship Weight (lbs)**
222.6 x 96.0 x 96.0	1187	14700	15800
Documentation			
Technical Manual	**Specification**	**Camouflage Drawing**	**Top Assembly**
		97403-13228E1617	TA-13230E4595

- NOT TYPE CLASSIFIED FOR ARMY USE

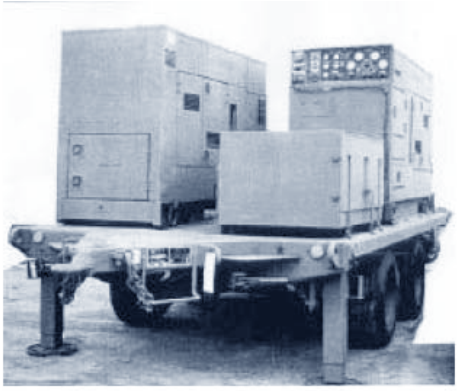

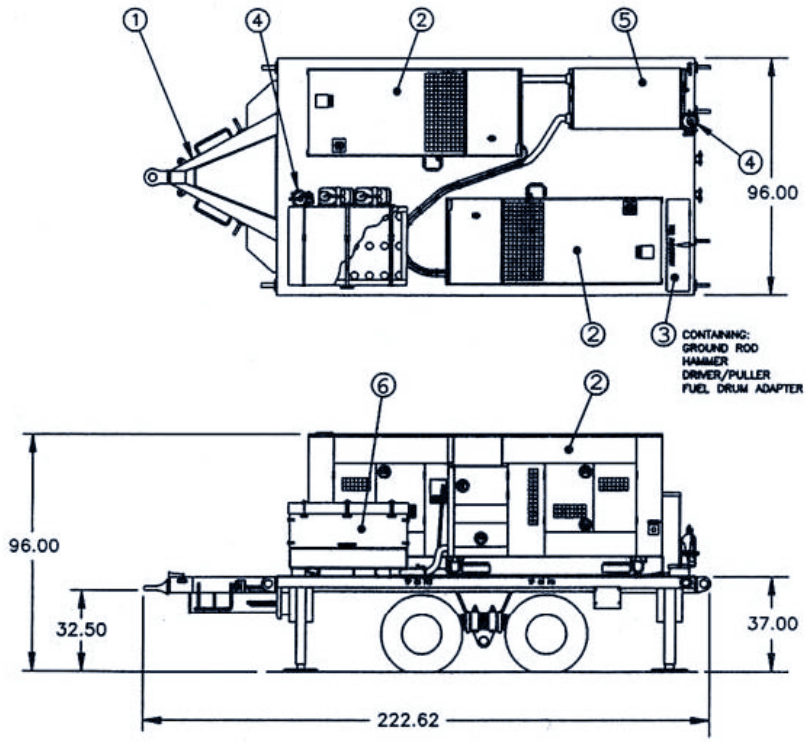

FIND NO.	COMPONENT	QTY	IDENTIFIER
1	AF Trailer Generator Assembly, M1061A1	1	2330-01-573-0985
2	MEP-816B	2	6115-01-462-0292
3	Accessory box	1	97403-13229E7946
4	Fire extinguisher, 5 lb., A-A-1106	2	4210-00-270-4512
5	Switch box	1	97403-13230E4550
6	Cable storage box	1	97403-13230E4580

FIGURE C- 45 PP-AN/MJQ-1632 - TQG Power Plant, DED, 60kW, 400 Hz, Air Force PP

Source: https://assist.dla.mil -- Downloaded: 2016-12-11T08:30Z
Check the source to verify that this is the current version before use.

This Page Intentionally Left Blank

Source: https://assist.dla.mil -- Downloaded: 2016-12-11T08:30Z
Check the source to verify that this is the current version before use.

C.3.1.12 TQG Generator Set, DED, 60kW.

TABLE C- XI Characteristic Data for MEP-806A and MEP-816A

Identification Data						
Model	MEP-806A			MEP-816A		
Description	Generator Set, 60 kW, DED, 50/60 Hz			Generator Set, 60 kW, DED, 400 Hz		
NSN	6115-01-274-7390			6115-01-274-7395		
LIN	G12034			G18052		
SSN	M53400			M53100		
Specification	**NOT PROCURABLE** (MIL-DTL-53133/9)			**NOT PROCURABLE** (MIL-DTL-53133/10)		
Trailer Configuration	PU-805: FIGURE C- 47; PP-AN/MJQ-41: FIGURE C- 49; PP-AN/MJQ-1612: FIGURE C- 50			PU-806: FIGURE C- 48; PP-AN/MJQ-1610: FIGURE C- 51		
Physical Characteristics						
Dimensions LWH (in)	86.3 x 35.3 x 58.2					
Ship Cube (ft^3)	103					
Wet Weight (lbs)	4063			4153		
Engine	John Deer Model 6059T 6 cyl Turbo Diesel, 134 horsepower @ 1800 RPM, 24 VDC starter, liquid cooled, electronic governor.					
Instrumentation	On/off switch, Hour, volt, frequency, oil pressure, coolant temperature.					
Fuels	Diesel DL-1, DL-2 and jet fuel JP-8, Jet A-1.					
Fuel Tank Capacity (Gal)	43					
Performance Characteristics						
Power Rating	30 kW, 0.8 power factor @ 4000 ft/120 °F. Derate: 3.5%/1000 ft (4000 - 8000 ft). Max Power: 110% of rated power.					
Environmental Capability	-25°F - 125°F, rain, humidity, altitude, sand/dust, transp., cold storage: -60°F, salt spray, fungus.					
Protective Devices	Automatic shut down with emergency bypass for low oil pressure, coolant high temp., overspeed, and overvoltage.					
Fuel consumption	4.51 gal/hour			4.99 gal/hour		
Human Factors	MIL-STD-1474					
Noise	70 dBA @ 7 meters (23 feet)					
Reliability (MTBF)	488 hr MTBOMF			361 hr MTBOMF		
Maintenance Ratio	less than 0.05					
Basic Design	Drip proof generator enclosure, fungus & moisture treated, solid state voltage regulator, solderless connectors, Marathon/Lima brushless generator.					
EMI	Suppressed to MIL-STD-461 limits.					
EMP	HAEMP IAW MIL-STD-2169.					
Motor load	30% (25%- 400) dip;0.7 sec to 95% int V					
Voltage Connection	120/208 V, 3 phase, 4 wire			240/416 V, 3 phase, 4 wire		
Frequency	**50 Hz**	**60 Hz**	**400 Hz**	**50 Hz**	**60 Hz**	**400 Hz**
Voltage adj. Range	190-213 V	197-240 V	197-229 V	380-426 V	395-480 V	395-458 V
Freq. adj. Range	± 2 Hz for 50/60Hz			390-420 Hz for 400Hz		

Electrical Performance					
Electric Power Quality		MEP-805A		MEP-815A	
		Frequency	**AC Voltage**	**Frequency**	**AC Voltage**
Regulation		0.25%	1%	0.25%	1%
Voltage modulation			1%		1%
Short term steady state stability (30 sec)		0.5% bandwidth	1% bandwidth	0.5% bandwidth	1% bandwidth
Long term steady state stability (4 hr)		1% bandwidth	2% bandwidth	1% bandwidth	2% bandwidth
Application of rated load	transient	4% under	15% dip	1.5% under	15% dip
	recovery time	2 sec	0.5 sec	1 sec	0.5 sec
Rejection of rated load	transient	4% over	15% rise	1.5% over	15% rise
	recovery time	2 sec	0.5 sec	1 sec	0.5 sec
Max waveform deviation factor			5%		5%
Individual waveform harmonic			2%		2%

Source: https://assist.dla.mil -- Downloaded: 2016-12-11T08:30Z
Check the source to verify that this is the current version before use.

TABLE C- XXII Characteristic Data for MEP-806A and MEP-816A Continued.

Optional Equipment			
Description	**NSN**	**Weight (lbs)**	**Effect on Dimensions (in)**
None			
Technical Manuals			
Army	**Air Force**	**Marine Corps**	**Navy**
TM 9-6115-645-10	TO 35C2-3-444-11	09244A/09245A-10/2	
TM 9- 6115-645-24	TO 35C2-3-444-12	09244A/09245A-24/2	
LO 9-6115-645-12			
TB 9-6115-645-24			

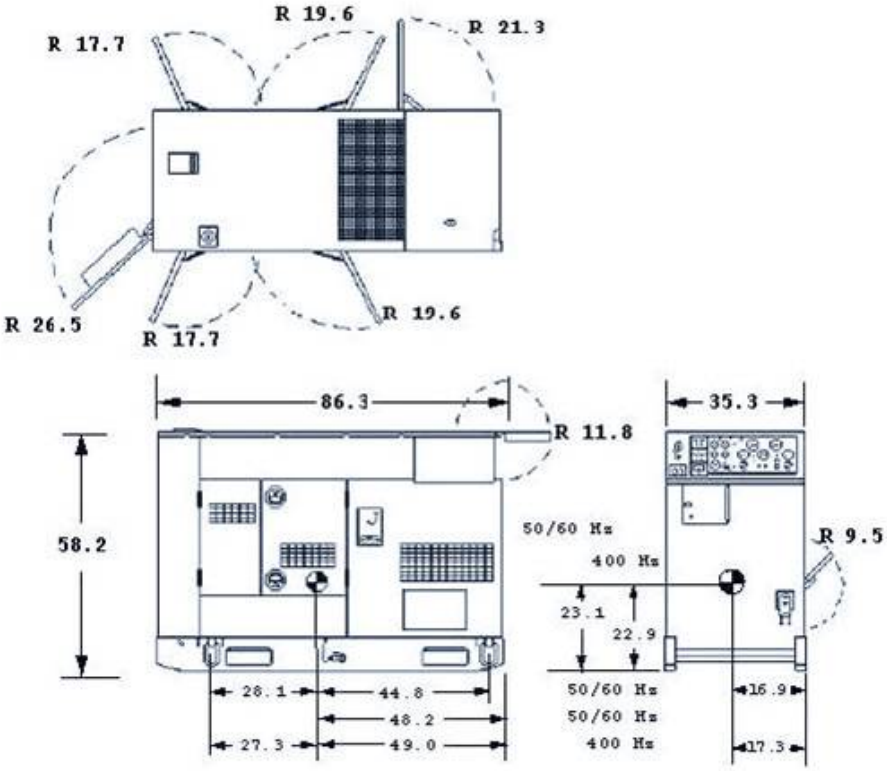

FIGURE C- 46 TQG, Generator Set, DED, 60 kW

Source: https://assist.dla.mil -- Downloaded: 2016-12-11T08:30Z
Check the source to verify that this is the current version before use.

Identification Data			
Model	**NSN**	**LIN**	**SSN**
PU-805	6115-01-317-2134	G78306	M50900
Physical Characteristics			
Dimension: LWH (in)	**Ship Cube (ft^3)**	**Wet Weight (lbs)**	**Ship Weight (lbs)**
165.0 x 94.5 x 86.3	770	6720	6920
Documentation			
Technical Manual	**Specification**	**Camouflage Drawing**	**Top Assembly**
	NOT PROCURABLE	97403-13228E1616	TA-13229E5755

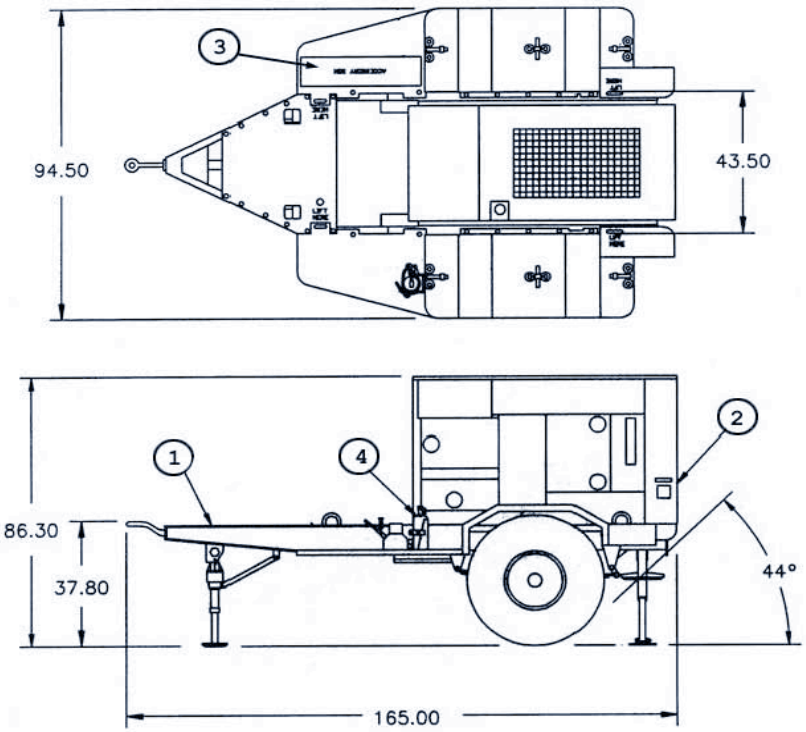

FIND	COMPONENT	QTY	IDENTIFIER
1	2-1/2 Ton modified trailer, M200A1	1	97403-13214E1257
2	MEP-806A	1	6115-01-274-7390
3	Accessory box	1	97403-13229E7946
4	Fire extinguisher, 5 lb., A-A-1106	1	4210-00-270-4512

FIGURE C- 47 PU-805 - TQG Power Unit, DED, 60 kW, 50/60 Hz

Source: https://assist.dla.mil -- Downloaded: 2016-12-11T08:30Z
Check the source to verify that this is the current version before use.

Identification Data			
Model	**NSN**	**LIN**	**SSN**
PU-806	6115-01-317-2133	G17460	M51000
Physical Characteristics			
Dimension: LWH (in)	**Ship Cube (ft^3)**	**Wet Weight (lbs)**	**Ship Weight (lbs)**
165.0 x 94.5 x 86.3	770	6815	7015
Documentation			
Technical Manual	**Specification**	**Camouflage Drawing**	**Top Assembly**
	NOT PROCURABLE	97403-13228E1616	TA-13229E5760

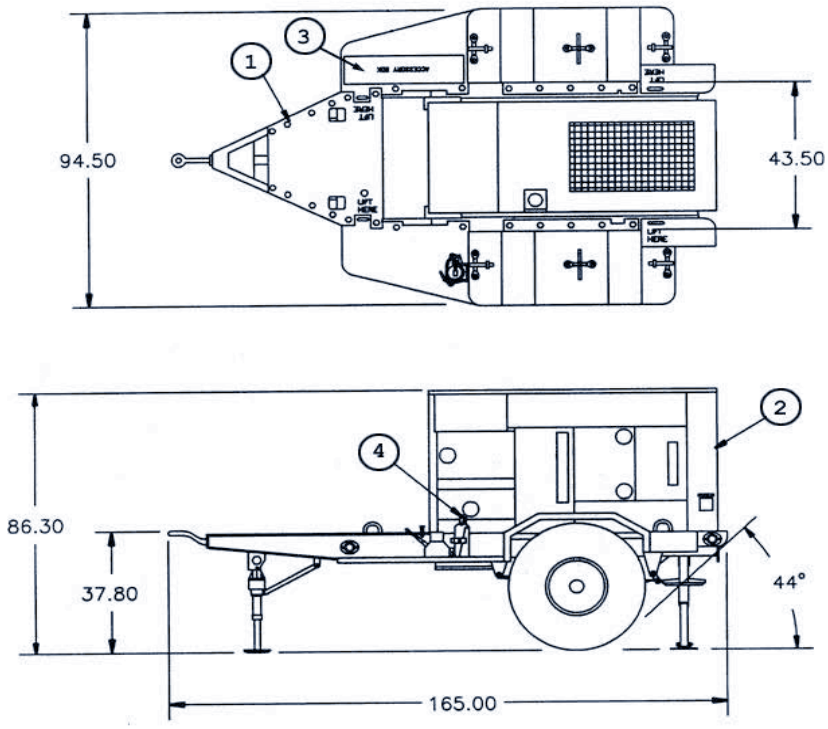

FIND	COMPONENT	QTY	IDENTIFIER
1	2-1/2 Ton modified trailer, M200A1	1	97403-13214E1257
2	MEP-816A	1	6115-01-274-7395
3	Accessory box	1	97403-13229E7946
4	Fire extinguisher, 5 lb., A-A-1106	1	4210-00-270-4512

FIGURE C- 48 PU-806 - TQG Power Unit, DED, 60 kW, 400 Hz

Source: https://assist.dla.mil -- Downloaded: 2016-12-11T08:30Z
Check the source to verify that this is the current version before use.

Identification Data			
Model	**NSN**	**LIN**	**SSN**
PP-AN/MJQ-41	6115-01-303-7896	P42194	M51100
Physical Characteristics			
Dimension: LWH (in)	**Ship Cube (ft^3)**	**Wet Weight (lbs)**	**Ship Weight (lbs)**
165.0 x 94.5 x 86.3 (2x)	770 (2x)	Unit A: 6695 Unit B: 6745	Unit A: 7695 Unit B: 7745
Documentation			
Technical Manual	**Specification**	**Camouflage Drawing**	**Top Assembly**
	NOT PROCURABLE	97403-13228E1616	TA-13229E5710

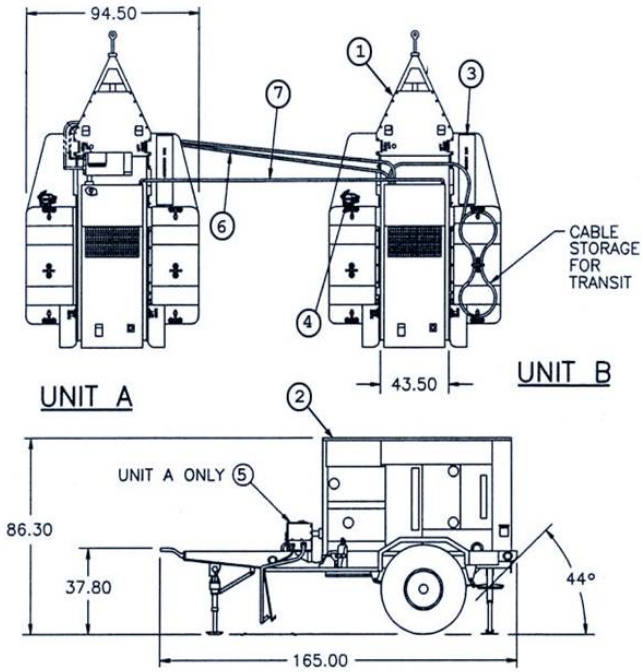

FIND	COMPONENT	QTY	IDENTIFIER
1	2-1/2 Ton modified trailer, M200A1	2	97403-13214E1257
2	MEP-806A	2	6115-01-274-7390
3	Accessory box	2	97403-13229E7946
4	Fire extinguisher, 5 lb., A-A-1106	2	4210-00-270-4512
5	Switch box (unit A)	1	97403-13229E5795
6	Cable assembly (unit B)	1	97403-13229E5741
7	Paralleling cable assembly	2	30554-88-22209

FIGURE C- 49 PP-AN/MJQ-41 - TQG Power Plant, DED, 60 kW, 50/60 Hz

Source: https://assist.dla.mil -- Downloaded: 2016-12-11T08:30Z
Check the source to verify that this is the current version before use.

Identification Data			
Model	**NSN**	**LIN**	**SSN**
PP-AN/MJQ-1612	6115-01-349-1536		M510
Physical Characteristics			
Dimension: LWH (in)	**Ship Cube (ft^3)**	**Wet Weight (lbs)**	**Ship Weight (lbs)**
222.6 x 96.0 x 96.0	1172	14700	15800
Documentation			
Technical Manual	**Specification**	**Camouflage Drawing**	**Top Assembly**
	NOT PROCURABLE	97403-13228E1617	TA-13229E9635

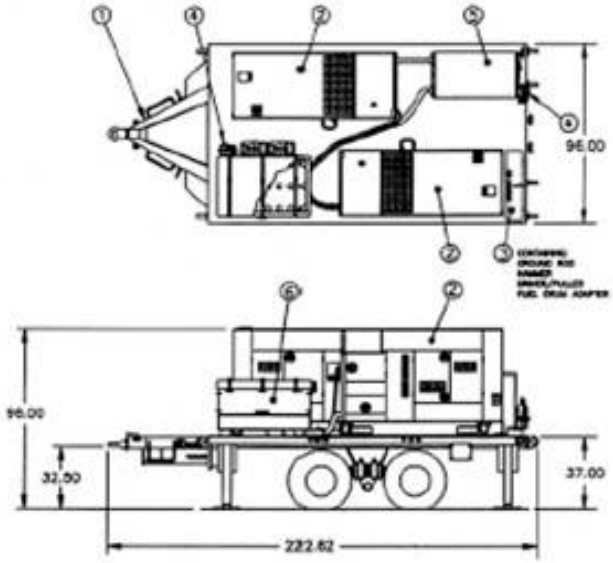

FIND	COMPONENT	QTY	IDENTIFIER
1	5 Ton modified trailer, M1061E1	1	
2	MEP-806A	2	6115-01-274-7390
3	Accessory box	1	97403-13229E7946
4	Fire extinguisher, 5 lb., A-A-1106	2	4210-00-270-4512
5	Switch box	1	97403-13230E4550
6	Cable storage box	1	97403-13230E4580

FIGURE C- 50 PP-AN/MJQ-1612 - TQG Power Plant, 60 kW, 50/60 Hz

Source: https://assist.dla.mil -- Downloaded: 2016-12-11T08:30Z
Check the source to verify that this is the current version before use.

Identification Data			
Model	**NSN**	**LIN**	**SSN**
PP-AN/MJQ-1610			M510
Physical Characteristics			
Dimension: LWH (in)	**Ship Cube (ft^3)**	**Wet Weight (lbs)**	**Ship Weight (lbs)**
222.6 x 96.0 x 96.0	1172	14700	15800
Documentation			
Technical Manual	**Specification**	**Camouflage Drawing**	**Top Assembly**
	NOT PROCURABLE	97403-13228E1617	TA-13229E4595

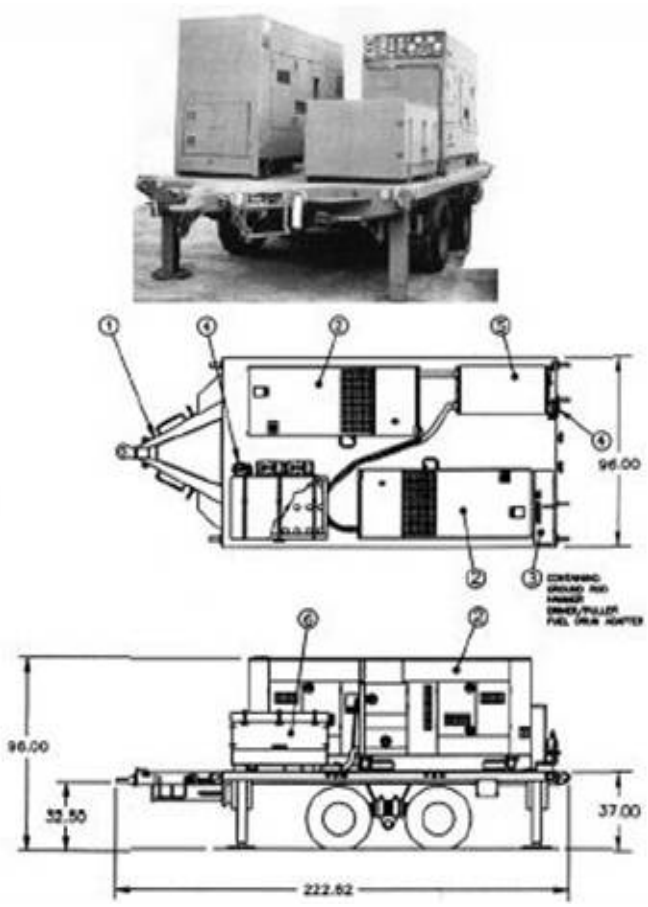

FIND	COMPONENT	QTY	IDENTIFIER
1	5 Ton modified trailer, M1061E1	1	
2	MEP-816A	2	6115-01-274-7395
3	Accessory box	1	97403-13229E7946
4	Fire extinguisher, 5 lb., A-A-1106	2	4210-00-270-4512
5	Switch box	1	97403-13230E4550
6	Cable storage box	1	97403-13230E4580

FIGURE C- 51 PP-AN/MJQ-1610 - TQG Power Plant, 60 kW, 400 Hz

Source: https://assist.dla.mil -- Downloaded: 2016-12-11T08:30Z
Check the source to verify that this is the current version before use.

C.3.1.13 DPGDS, 750 kW, 50/60Hz.

TABLE C- XII Characteristic Data for MEP-810A

Identification Data		
Model	MEP-810A (C-130 transport)	
Description	750 kW,50/60 Hz, DED	
NSN	6115-01-486-4033	
LIN	Not Applicable: Air Force Unit	
SSN		
Specification	**NOT PROCURABLE**	
Trailer Configuration	Unit is wheel mounted	
Physical Characteristics		
Dimensions LWH (in)	254 x 96 x 102	
Ship Cube (ft^3)	1440	
Weight (lbs)	25600 (Dry)	
Engine	Diesel (2), 692 x 2 horsepower @ 1800 RPM, Model: Caterpillar 3456EPG, 24 VDC starter.	
Instrumentation	Voltmeter, frequency meter, ammeter, hour-meter, oil pressure, battery charging ammeter.	
Fuels	Diesel DL-1, DL-2; Jet Fuel JP-8.	
Fuel Tank Capacity (Gal)	120 (day tank)	
Performance Characteristics		
Power Rating	750 kW, 0.8 pf lagging @ 4000 ft/125°F	
Environmental Capability	-25°F to 125°F for system. Rain, humidity, altitude, sand/dust, Air, road, rail transportable, vibration, cold storage, salt spray, fungus, 15° incline.	
Protective Devices	Automatic shut down with emergency bypass for low oil pressure, coolant high-temperature, and over-voltage, time over-current.	
Fuel consumption	60 gal/hour @ rated load	
Human Factors	MIL-STD-1474	
Noise	85 dBA @ 7 meters (23 feet)	
Reliability (MTBF)	Greater than 650 hrs	
Electrical Characteristics		
Basic Design	Drip proof generator enclosure, fungus & moisture treated, solid state voltage regulator, solderless connectors, permanent magnet pilot excited, two Caterpillar SR4B 50/60 Hz generators	
EMI	Meets MIL-STD-461	
EMP	HAEMP IAW MIL-STD-2169	
Motor load	N/A	
Frequency	**50 Hz**	**60 Hz**
Voltage Connection	2200/3800 V, 3 phase, 4 wire	2400/4160 V, 3 phase, 4 wire
Voltage adj. Range	3400 – 4000 V	3720 – 4400 V
Freq. adj. Range	±3%	

Electrical Performance			
Electric Power Quality		**Frequency**	**AC Voltage**
Regulation		3%	3%
Voltage modulation			1%
Short term steady state stability (30 sec)		1% bandwidth	2% bandwidth
Long term steady state stability (4 hr)		2% bandwidth	2% bandwidth
Application of rated load	transient	3% under	30% dip
	recovery time	4 sec	2 sec
Rejection of rated load	transient	5% over	30% rise
	recovery time	6 sec	2 sec
Max waveform deviation factor			5%
Individual waveform harmonic			3%
DC ripple			

Source: https://assist.dla.mil -- Downloaded: 2016-12-11T08:30Z
Check the source to verify that this is the current version before use.

TABLE C- XII Characteristic Data for MEP-810A – Continued.

Optional Equipment			
Description	**NSN**	**Weight (lbs)**	**Effect on Dimensions (in)**
Winterization kit			None (internal)
Technical Manuals			
Army	**Air Force**	**Marine Corps**	**Navy**
TM 9-6115-484-14	TO 35C2-3-518-1	none	none
TM 9-6115-484-24P	TO 35C2-3-518-4		

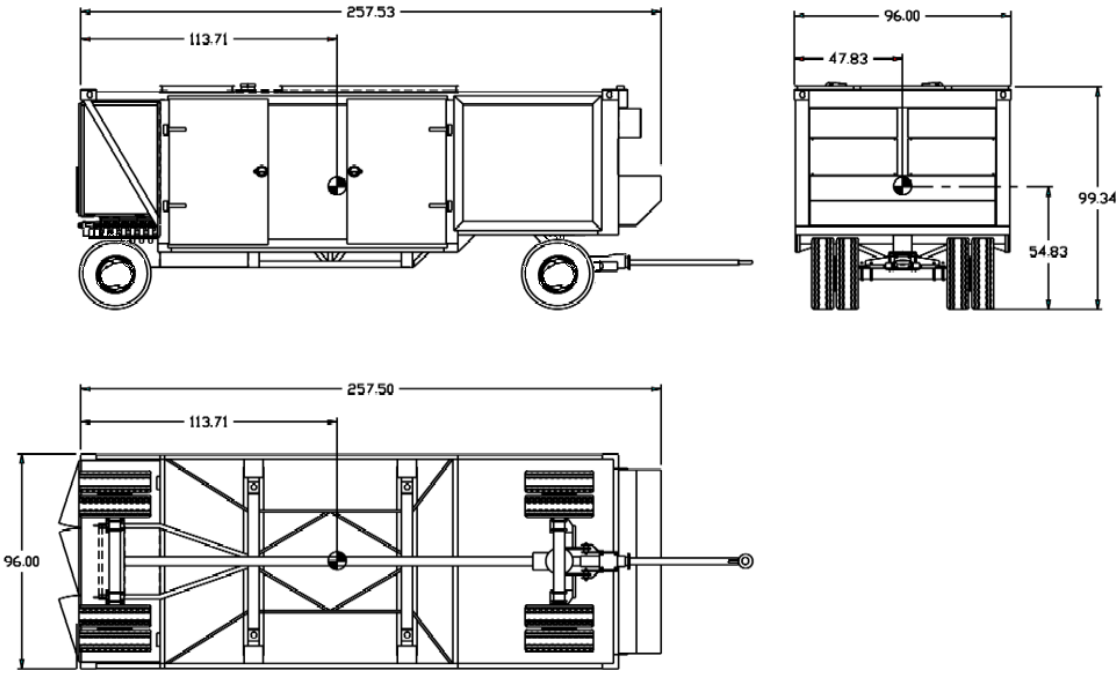

FIGURE C- 52 MEP-810A – DPGDS, 750 kW, 50/60 Hz

Source: https://assist.dla.mil -- Downloaded: 2016-12-11T08:30Z
Check the source to verify that this is the current version before use.

C.3.1.14 DPGDS, DED, 750 kW.

TABLE C- XIII Characteristic Data for MEP-810B

Identification Data			
Model	MEP-810B (Highway transport)		
Description	750 kW, 50/60 Hz, DED		
NSN	6115-01-486-4032		
LIN	Z00221		
SSN			
Specification			
Trailer Configuration	Integral Highway trailer mounted –FIGURE A-34		
Physical Characteristics			
Dimensions LWH (in)	264 x 96 x 130		
Ship Cube (ft^3)	1907		
Wet Weight (lbs)	28580 (Dry)		
Engine	Diesel (2), 692 x 2 horsepower @ 1800 RPM, Model: Caterpillar 3456EPG, 24 VDC starter.		
Instrumentation	Voltmeter, frequency meter, ammeter, hour-meter, oil pressure, battery charging ammeter.		
Fuels	Diesel DL-1, DL-2; Jet Fuel JP-8.		
Fuel Tank Capacity (Gal)	120 (day tank)		
Performance Characteristics			
Power Rating	750 kW , 0.8 pf lagging @ 4000 ft/125°F		
Environmental Capability	-25°F to 125°F for system. Rain, humidity, altitude, sand/dust, Air, road, rail transportable, vibration, cold storage, salt spray, fungus, 15° incline.		
Protective Devices	Automatic shut down with emergency bypass for low oil pressure, coolant high-temperature, and over-voltage, time over-current.		
Fuel consumption	60 gal/hour @ rated load		
Human Factors	MIL-STD-1474		
Noise	85 dBA @ 7 meters (23 feet)		
Reliability (MTBF)	Greater than 650 hrs		
Maintenance Ratio			
Electrical Characteristics			
Basic Design	Drip proof generator enclosure, fungus & moisture treated, solid state voltage regulator, solderless connectors, permanent magnet pilot excited, two Caterpillar SR4B 50/60 Hz generators.		
EMI	Meets MIL-STD-461E		
EMP	HAEMP IAW MIL-STD-2169		
Motor load	N/A		
Voltage Connection	2200/3800 V, 3 phase, 4 wire (50 Hz)	2400/4160 V, 3 phase, 4 wire (60 Hz)	
Voltage adj. Range	3400 – 4000 V	3720 – 4400 V	
Freq. adj. Range	±3%		
Electrical Performance			
Electric Power Quality		**Frequency**	**AC Voltage**
Regulation		3%	3%
Voltage modulation			1%
Short term steady state stability (30 sec)		1% bandwidth	2% bandwidth
Long term steady state stability (4 hr)		2% bandwidth	2% bandwidth
Application of rated load	transient	3% under	30% dip
	recovery time	4 sec	2 sec
Rejection of rated load	transient	5% over	30% rise
	recovery time	6 sec	2 sec
Max waveform deviation factor			5%
Individual waveform harmonic			3%

Source: https://assist.dla.mil -- Downloaded: 2016-12-11T08:30Z
Check the source to verify that this is the current version before use.

TABLE C- XXXIII Characteristic Data for MEP-810B Continued.

Optional Equipment			
Description	**NSN**	**Weight (lbs)**	**Effect on Dimensions (in)**
Winterization kit			None (internal)
Technical Manuals			
Army	**Air Force**	**Marine Corps**	**Navy**
TM 9-6115-484-14	TO 35C2-3-518-1	none	
TM 9-6115-484-24P	TO 35C2-3-518-4		

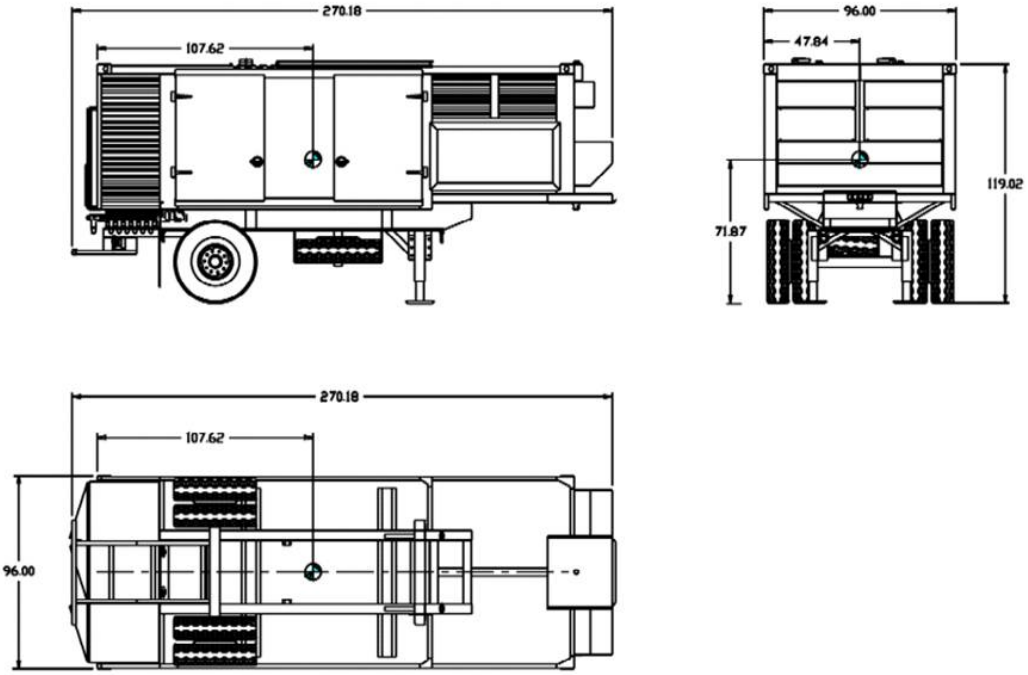

FIGURE C- 53 MEP-810B – DPGDS, DED, 750 kW, 50/60 Hz

Source: https://assist.dla.mil -- Downloaded: 2016-12-11T08:30Z
Check the source to verify that this is the current version before use.

C.3.1.15 DISE, 200 Amp per Phase Feeder System - 3 Phase. Used to distribute 3 phase power from 60, 100 and 200 kW generator sets.

TABLE C- XIV Characteristic Data for the M200

	DISE
Model	M200 Electrical Feeder System
Description	120/208V, 3 phase, 200 amp/phase. Includes feeder center, pigtail, feeder cable and carrying straps for DEPMEDS
Specification	**NOT PROCURABLE**
NSN	6150-01-208-9755
LIN	F55488
SSN	R45500
Weight (lbs)	140
Circuit breakers	Thermal-magnetic w/ground fault on 20 amp output
Dimension: LWD (in)	33.5 x 23.0 x 20.4
(Vol in ft^3)	9.1

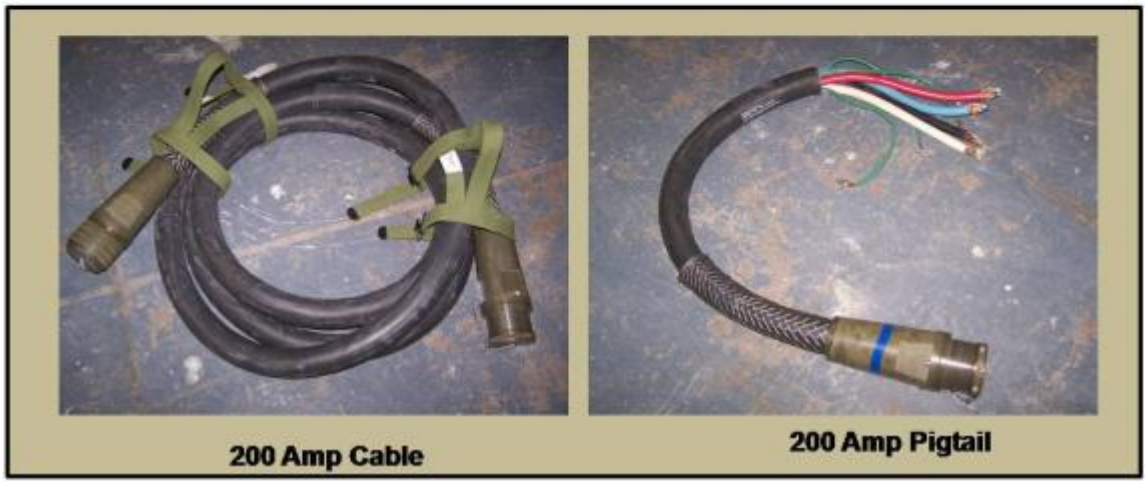

FIGURE C- 54 DISE, 200 Amp per Phase Feeder System - 3 Phase

Source: https://assist.dla.mil -- Downloaded: 2016-12-11T08:30Z
Check the source to verify that this is the current version before use.

C.3.1.16 DISE, 100 Amp per Phase Feeder System - 3 Phase. Used to distribute 3 phase power from 30, 60, 100 and 200 kW generator sets.

TABLE C- XV Characteristic Data for the M100

	DISE
Model	M100 Electrical Feeder System
Description	120/208 V, 3 phase, 100 amp/ ph. Includes feeder center, pigtail, feeder cable and carrying straps for DEPMEDS
Specification	**NOT PROCURABLE**
NSN	6150-01-208-9754
LIN	F55487
SSN	R45400
Weight (lbs)	77
Circuit breakers	Thermal-magnetic w/ground fault on 20 amp output
Dimension: LWD (in)	24.3 x 22.4 x 20.4
Ship Cube (ft^3)	6.4

1

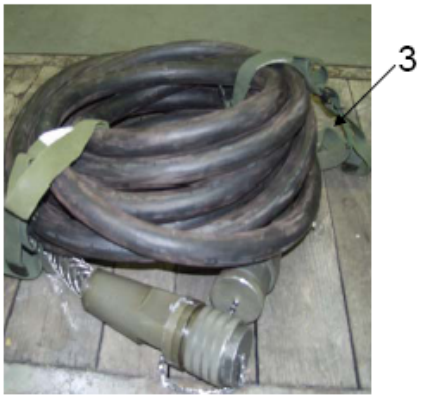

2

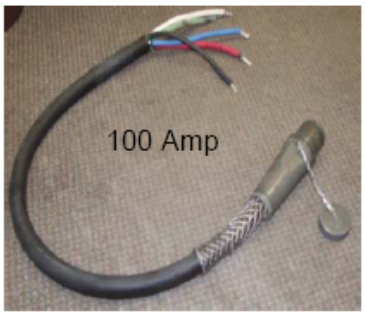

4

1- **Electrical Feeder Center**: 3-phase 120/208 V, 100 amp/ph, LIN F55621, NSN 6150-01-308-5671, Part Number 13226E7029, 1 ea

2 – **Service/Feeder Cable**: 50-ft (15.2m), 100-amp, 8-pin, NSN 6150-01-256-6304, Part Number 13226E7024, 2 ea

3 – **Cable Carrying Strap**, NSN 6150-01-256-6299, Part Number 13226E5825, 8 ea

4 – **Pigtail Cable**: 4-ft (1.2 m), 100-amp, 200-amp, 8-pin, NSN 6150-01-256-6300, Part Number 13226E7020, 1 ea

FIGURE C- 55 DISE, 100 Amp per Phase Feeder System - 3 Phase

Source: https://assist.dla.mil -- Downloaded: 2016-12-11T08:30Z
Check the source to verify that this is the current version before use.

C.3.1.17 DISE, 40 Amp per Phase Distribution System - 3 Phase. Used to distribute power from 10 through 200 kW AC generator sets. The picture below is of Three Phase Family of DISE components and includes 200 and 100 amp feeder centers and 40 amp distribution center.

TABLE C- XVI Characteristic Data for the M40

	DISE
Model	M40 Electrical Distribution System
Description	120/208 V, 3 phase, 40 amp/phase. Includes distribution center, cables, carrying straps, receptacles and storage container
Specification	**NOT PROCURABLE**
NSN	6150-01-208-9753
LIN	F55485
SSN	R45300
Weight (lbs)	55
Circuit breakers	Thermal-magnetic & ground fault on some 20 amp output
Dimension: LWD (in)	24.3 x 21.8 x 16.1
Ship Cube (ft^3)	4.9

1

2

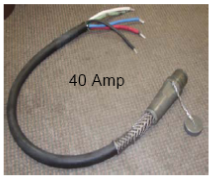

4

1 – Distribution Center: 3-phase, 120/208 V, 40-amp/ph, LIN F55485, NSN 6150-01-307-9446, Part Number 13226E7028, Dist Ctr Part Number 13229E6345, 1 ea

2 – Service/Feeder Cable: 100-ft (30.48m), 40/60-amp, 3-pin, NSN 6150-01-247-4761, Part Number 13226E7023-2, 1 ea

3 – Cable Carrying Strap, NSN 6150-01-256-6299, Part Number 13227E5825, 16 ea

4 - Pigtail Cable: 4-ft (1.2m), 40/60-AMP, 3-pin, NSN 6150-01-256-6301, part Number 13226E7019, 1 ea

Transit and Storage Container, NSN 6150-01-256-6298, Part Number 13227E5830, 1 ea
Packaging List, Part Number 13227E5826

Box Receptacle, 120 V, 20-amp, NSN 6150-01-251-9125, Part Number 13226E7040, 1 ea

Extension Cable, 25-ft (7.6 m), 20-amp, 3-pin, NSN 6150-01-250-0044, Part Number 13226E7032-2, 3 ea

Extension Cable, 50-ft (15.2 m), 20-amp, 3-pin, NSN 6150-01-250-3643, Part Number 13226E7032-1, 3 ea

Utility Light, PN# 13226E7043, 2 ea

Light Bulb Container, PN# 132275829, 3 ea
Blue, 40 Watt, PN# W-L-101/68, 3 ea
White, 75 Watt, PN# W-L-101/85, 3 ea

FIGURE C- 56 DISE, 40 Amp per Phase Distribution System - 3 Phase

Source: https://assist.dla.mil -- Downloaded: 2016-12-11T08:30Z
Check the source to verify that this is the current version before use.

C.3.1.18 DISE, 60 Amp Distribution System - Single Phase. Used to distribute single phase power from 5 through 15 kW AC generator sets and single phase output from feeder systems.

TABLE C- XVII Characteristic Data for the M60

.	DISE
Model	M60 Electrical Distribution System
Description	120V, 1 phase, 60 amp dist center and associated components for DEPMEDS
Specification	**NOT PROCURABLE**
NSN	6150-01-208-9752
LIN	F55553
SSN	R45200
Weight (lbs)	45
Circuit breakers	Thermal-magnetic w/ground fault on some 20 amp output
Dimension: LWD (in)	24.3 x 21.8 x 15.5
Ship Cube (ft^3)	4.7

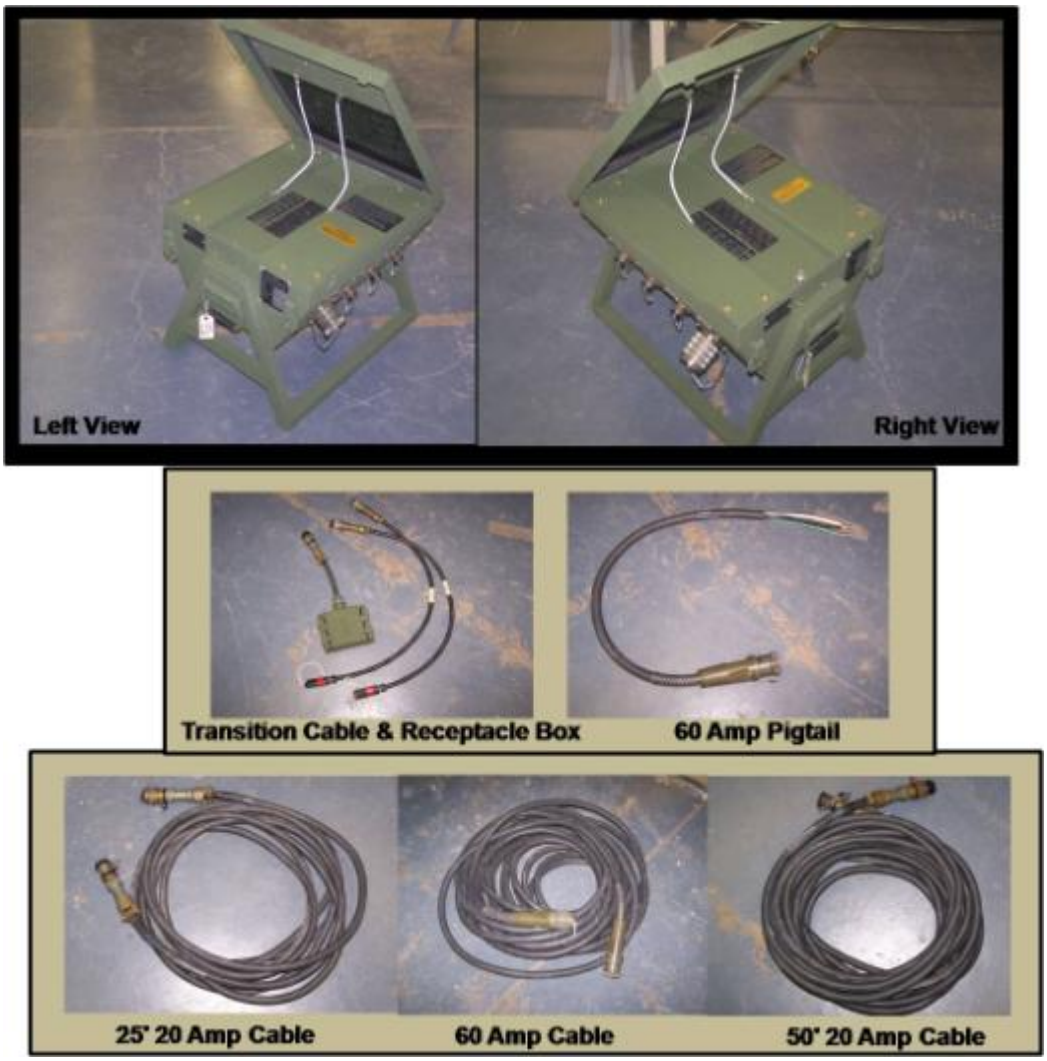

FIGURE C- 57 DISE, 60 Amp Distribution System - 1 Phase

Source: https://assist.dla.mil -- Downloaded: 2016-12-11T08:30Z
Check the source to verify that this is the current version before use.

C.3.1.19 DISE/PDISE, Utility Receptacles and Lighting Set. Used to distribute single phase power to lighting and electrical receptacles from distribution systems.

TABLE C- XVIII Characteristic Data for the M46

	DISE
Model	M46 Electrical Utility Kit
Description	Extension cords, utility receptacles and lighting sets
Specification	**NOT PROCURABLE**
NSN	6150-01-208-9751
LIN	U89185
SSN	R62800
Weight (lbs)	85
Dimension: LWD in inches	16.0 x 16.0 x 26.0
Ship Cube (ft^3)	3.9

1 – **Transit and Storage Container**, LIN U89185, NSN 6150-01-208-9751, Part Number 13229E6362, 1 ea

2 - **Receptacle Box**: 120 V, 20-amp, NSN 6150-01-251-9125, part Number 13226E7040, 6ea

3 – **Cable Securing Strap**, NSN 6150-01-250-0045, Part Number 13226E7044, 6 ea

4 – **Support Rope Assembly**, 53-h (1.2m), NSN 6150-01-256-6302, Part Number 13226E7041, 2 ea

5 – **Light Bulb Kit**: NSN 6150-01-264-2068, Part Number 13227E5829, 3 ea
40 W, **Blue**, NSN 6240-00-617-1 744, Part Number W-L-I 01/68, 3 ea
75 W, **White**, NSN 6240-00-689-8504, Part Number 40A/B-120V, 3 ea

6 – **Utility Light**, 120 V, dual socket, incandescent, NSN 6230-01-247-4784, Part Number 13226E7043, 2 ea

7 – **Extension Cables**, NSN 6150-01-247-4766, Part Number 13226E7032-3, 6 ea

8 – **Branch Circuit Cable Assembly**: 24-h (7.3m), 20-amp, 3-pin, NSN 6150-01-251-9124, Part Number 13226E7034, 2 ea

FIGURE C- 58 DISE, Utility Receptacles and Lighting Set

Source: https://assist.dla.mil -- Downloaded: 2016-12-11T08:30Z
Check the source to verify that this is the current version before use.

APPENDIX C

CONCLUDING MATERIAL

Custodians:
Navy-YD
ARMY-CR4
Air Force-99

Preparing activity
ARMY-CR4
(Project 6115-2013-002)

Review Activities:
Army - CE, MI,
NAVY-AS, EC, MC
Air Force -11
DLA - GS

NOTE: These activities listed above were interested in this document as of the date of this document. Since organizations and responsibilities can change, you should verify the currency of the information above using the ASSIST database at: https://assist.dla.mil.

Source: https://assist.dla.mil -- Downloaded: 2016-12-11T08:30Z
Check the source to verify that this is the current version before use.