INCH-POUND

MIL-C-28876/26C
9 JULY 1992
SUPERSEDING
MIL-C-28876/26B
15 June 1988

MILITARY SPECIFICATION SHEET

CONNECTORS, FIBER OPTIC, CIRCULAR, RECEPTACLE STYLE,
MULTIPLE REMOVABLE TERMINI, SCREW THREADS,
WALL MOUNTING, WITH SHORT BACKSHELL, NON-ENVIRONMENT

This specification is approved for use by all Departments and Agencies of the Department of Defense.

The requirements for acquiring the product described herein shall consist of this specification sheet and the issue of the following specification listed in that issue of the Department of Defense Index of Specifications and Standards (DODISS) specified in the solicitation: MIL-C-28876.

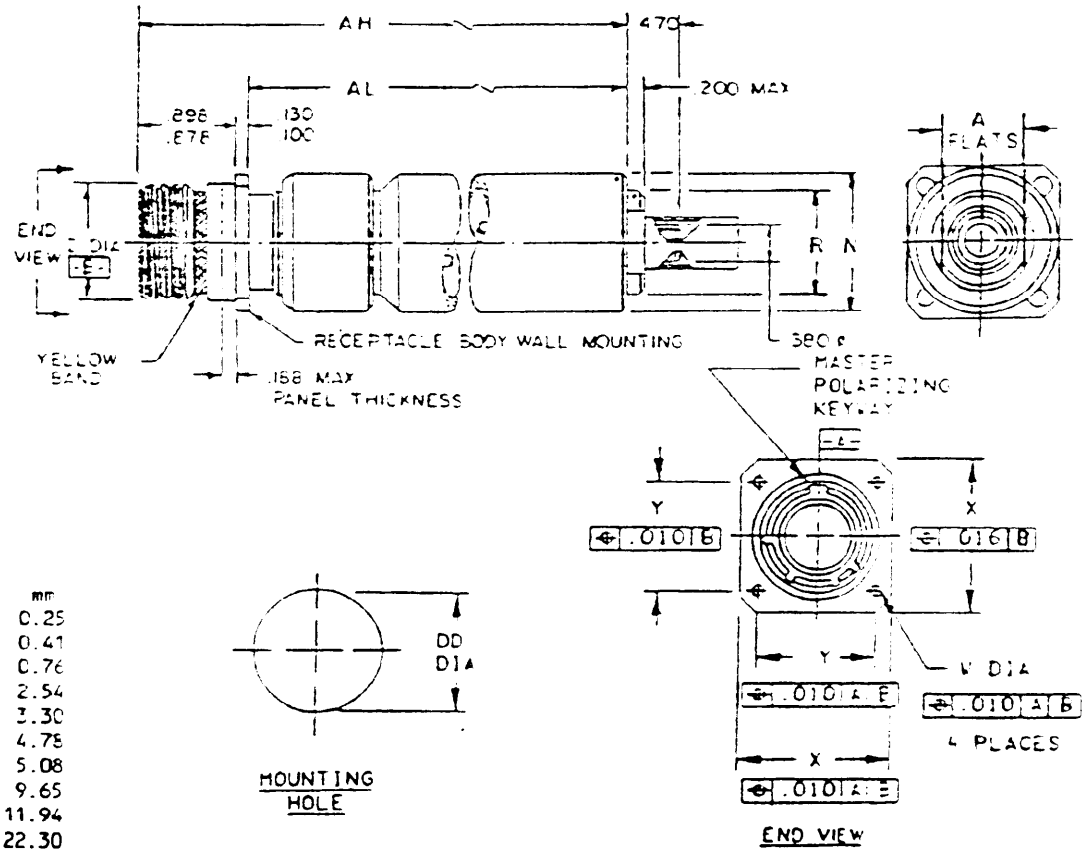


| Inches | mm |
|---|---|
| .010 | 0.25 |
| .016 | 0.41 |
| .030 | 0.76 |
| .100 | 2.54 |
| .130 | 3.30 |
| .188 | 4.78 |
| .200 | 5.08 |
| .380 | 9.65 |
| .470 | 11.94 |
| .878 | 22.30 |
| .898 | 22.81 |
| .978 | 24.84 |
| 1.263 | 32.08 |

FIGURE 1. Receptacle connector with short straight backshell strain relief.



DISTRIBUTION STATEMENT A. Approved for public release; distribution is unlimited.

Source: https://assist.dla.mil -- Downloaded: 2016-12-10T03:40Z
Check the source to verify that this is the current version before use.

| Shell size see note 6 | N dia max | W | X | DD dia ref | Z dia max | NN across flats | R dia max | AH | AL max | A flats max | Y TIR |
|---|---|---|---|---|---|---|---|---|---|---|---|
| 15<br>see note 5 | 1.263<br>(32.08) | .130<br>(3.30)<br>.115<br>(2.92) | 1.278<br>(32.46)<br>1.238<br>(31.45) | 1.124<br>(28.55) | 1.062<br>(26.97) | 1.153<br>(29.29)<br>1.144<br>(29.06) | .978<br>(24.84) | 4.613<br>(117.17)<br>4.573<br>(116.15) | 3.60<br>(91.44) | .750<br>(19.05) | .968<br>(24.59) |

NOTES:
1. Dimensions are in inches.
2. Metric equivalents are given for general information only.
3. Metric equivalents (mm) are in parenthesis.
4. Dimensions apply after plating.
5. For insert arrangement, see the indicated figure in MIL-STD-2163.
6. The color band shall be yellow and in accordance with EIA-RS-359 for all shell sizes.
7. For mating key dimensions and configurations, see MIL-C-28876, figure 6.

FIGURE 1. Receptacle connector with short straight backshell strain relief - Continued.



Source: https://assist.dla.mil -- Downloaded: 2016-12-10T03:40Z
Check the source to verify that this is the current version before use.

REQUIREMENTS:

Temperature: Range 1 (-54°C to +65°C operating, -62°C to +71°C storage).

Dimensions and configurations: See figure 1 herein and MIL-C-28876, figures 5 and 9.

Weight:

| Shell size | Weight (ounces), maximum |
|---|---|
| 15 | 11.5 |

Fiber optic cable:

Cable diameter: 0.315 inch (8.00 mm) or 0.423 inch (10.75 mm) ± 10 percent.

Fiber type: MIL-F-49291/3, MIL-F-49291/4, MIL-F-49291/6, and MIL-F-49291/7.

Insert arrangement: See MIL-STD-2163 for desired shell size.

Termini: Style P (pin) or S (socket). See MIL-T-29504/1, MIL-T-29504/2, MIL-T-29504/12, MIL-T-29504/13, MIL-T-29504/14, and MIL-T-29504/15 (for dummy terminus, see MIL-T-29504/3).

Cleaning procedures: Dampen lens tissue (paper wipe or cotton swab) with a small amount of isopropyl alcohol (minimum 90 percent strength). Gently wipe the face of the connector, removing any debris, particularly around the optical fiber, using clean lint-free lens tissue (paper wipe or cotton swab). Carefully dry the contact with a clean, dry, lint-free tissue.

Shell polarization: 1 through 6 keyway positions. See MIL-C-28876, figure 6.

Marking:

PIN: Marked on flange of receptacle (see table I).

M28876/26 C 1 2 P 1

Basic PIN

Shell size designator letter

Insert arrangement number

Keying position number

Terminus style letter

Backshell dash number

TABLE I. PIN designators.

| Shell size | Designator | Insert arrangement number | Termini | Key position | Cable outer diameter, backshell dash number | |
|---|---|---|---|---|---|---|
| | | | | | 1 | 2 |
| 15 | C | 1 | P or S | 1, 2, 3, 4, 5, or 6 | .515 (13.08) | .405 (12.57) |



Source: https://assist.dla.mil -- Downloaded: 2016-12-10T03:40Z
Check the source to verify that this is the current version before use.

Mating counterpart: Plug connectors specified in MIL-C-28876/6 through MIL-C-28876/9.

Installation and removal tools: As specified in MIL-I-81969/46 through MIL-I-81969/49, MIL-T-83523/5 and MIL-T-83523/7.

For qualified products listing, quality conformance, and periodic inspections, dummy termini shall be used in all unused cavities.

Patent notice: The Government does not have a royalty-free license under the following patents for the benefit of manufacturers of the item, either for the Government or for use in equipment to be delivered to the Government:

| Patent application no | Patent expiration date |
|---|---|
| 4,493,529 | 1/15/2002 |

Revision letters are not used to denote changes due to the extensiveness of the changes.

CONCLUDING MATERIAL

Custodians:
Army - CR
Navy - SH
Air Force - 85
NASA - NA

Review activities:
Army - MI
Navy - AS, MC
Air Force - 17, 19, 80, 90, 99
DLA - ES

User activities:
Navy - OS, YD
Air Force - 13, 14

Preparing activity:
Navy - SH

Agent:
DLA - ES

(Project 6060-D093-17)



Source: https://assist.dla.mil -- Downloaded: 2016-12-10T03:40Z
Check the source to verify that this is the current version before use.