INCH - POUND

MIL-DTL-26482H
w/AMENDMENT 1
7 December 2009
SUPERSEDING
MIL-DTL-26482H
20 February 2007

DETAIL SPECIFICATION

# CONNECTORS, ELECTRICAL, (CIRCULAR, MINIATURE, QUICK DISCONNECT, ENVIRONMENT RESISTING), RECEPTACLES AND PLUGS, GENERAL SPECIFICATION FOR

Reactivated after 5 October 2006, and may be used for new and existing designs and acquisitions.

This specification is approved for use by all Departments and Agencies of the Department of Defense.

## 1. SCOPE

1.1 Scope. This specification covers the general requirements for two series of environment resisting, quick disconnect, miniature, circular electrical connectors (and accessories). Each series includes hermetic receptacles. The two series of connectors are intermateable when using power contacts and are not intermateable when using shielded contacts. When intermated, the minimum performance requirement for series 1 connectors will be met.

Comments, suggestions, or questions on this document should be addressed to Defense Supply Center Columbus, ATTN: VAI, P.O. Box 3990, Columbus OH 43218-3990 or emailed to circularconnector@dscc.dla.mil. Since contact information can change, you may want to verify the currency of this address information using the ASSIST Online database at https://assist.daps.dla.mil.

AMSC N/A FSC 5935

Source: https://assist.dla.mil -- Downloaded: 2016-11-16T06:09Z
Check the source to verify that this is the current version before use.

1.1.1 Part or Identifying Number (PIN). The following are examples of PINs:

a. PIN example (series 1):

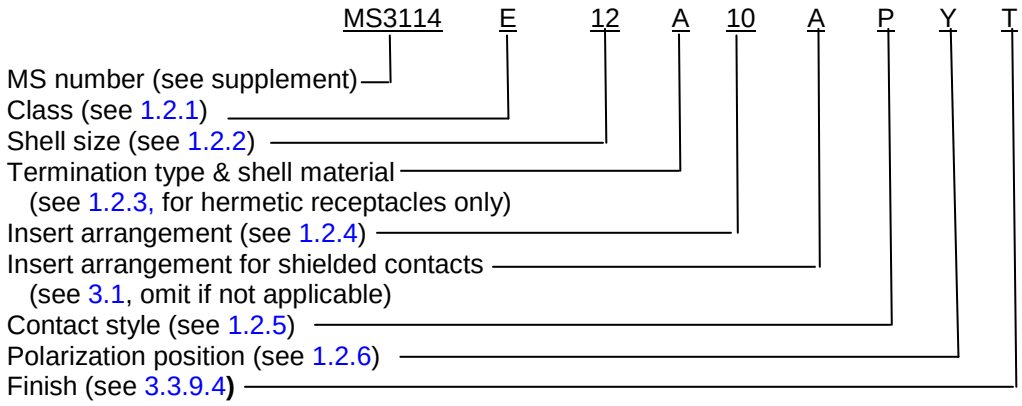


(Note: Finish W is the default finish. No finish designator is used when finish W is required.)

b. PIN example (series 2):

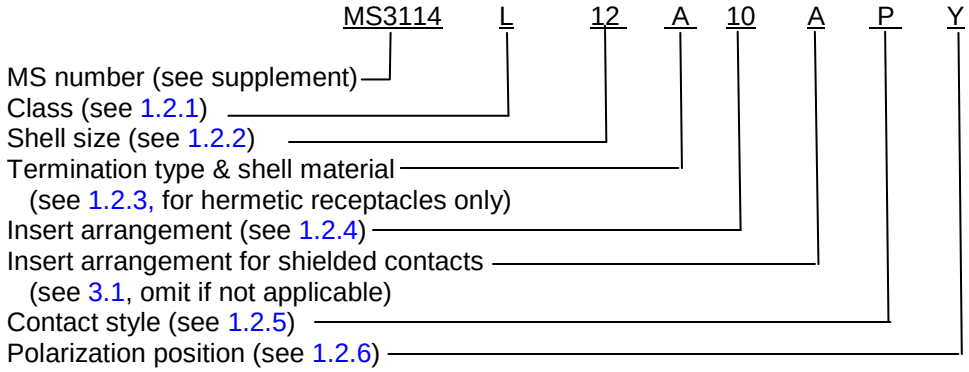


1.1.2 Series description. The connectors are identified as series 1 or series 2 and are designed to provide contact protection during mating.

a. Series 1 – Connector, bayonet coupling, solder or front release crimp removable contacts (125ºC). Series 1, hermetic are also available. Four alternative conductive finishes, including W, D, T and Z, are available (See 3.3.9.4) (See 6.1 for intended use.).

b. Series 2 – Connector, bayonet coupling, rear release crimp removable contacts (classes A and L (200ºC) and classes D, H, N, T, W and Z (175°C)). Series 2, hermetic connectors are available with nonremovable solder type contacts or crimp removable terminations (see 6.2).



Source: https://assist.dla.mil -- Downloaded: 2016-11-16T06:09Z
Check the source to verify that this is the current version before use.

1.2 Classification.

1.2.1 Class. The class and series of connectors are identified as shown in table I.

TABLE I. Connector class and series.

| Class | Series 1 (125°C) | | Series 2 (200°C) | | Series 2 (175°C) |
|---|---|---|---|---|---|
| | Solder | Front release crimp removable contacts | Rear release crimp removable contacts | Solder | Rear release crimp removable contacts |
| A-Grommet seal, nonconductive | | | X | | |
| E-Grommet seal, conductive (finish options W, D, T and Z) | X | X | 1/ | | |
| P-Potted seal, conductive (finish options W, D, T and Z) | X | X | | | |
| H-Hermetic seal, conductive | X | | | X | |
| J-Insert seal with gland seal for jacketed cable, conductive | X | | | | |
| L-Fluid resistant, conductive electroless nickel 1/ 2/ | | | X | | |
| N-Hermetic seal, crimp termination conductive | | | | | X |
| F-Grommet seal with strain relief clamp, conductive (finish options W, D, T and Z) | X | X | | | |
| W-Cadmium plate, corrosive and fluid resistant, conductive | | | | | X |
| Z- Zinc-nickel, corrosive and fluid resistant, conductive | | | | | X |
| T- Nickel fluorocarbon polymer, corrosive and fluid resistant, conductive | | | | | X |
| D- Pure electrodeposited aluminum, corrosive and fluid resistant, conductive | | | | | X |

1/ Class L is upgraded to 200°C and replaces class E, series 2, rear release, crimp removable contacts.
2/ Class L is for space applications only.

1.2.2 Shell size. Shell sizes are as specified on the applicable MS standard.



Source: https://assist.dla.mil -- Downloaded: 2016-11-16T06:09Z
Check the source to verify that this is the current version before use.

1.2.3 Termination type and shell material (hermetic receptacles only). The type of termination and shell material are designated as follows:

Type A – Solder cup termination – stainless steel shell (series 1 and 2).
Type B – Eyelet termination – stainless steel shell (series 1 and 2).
Type C – Solder cup termination – ferrous alloy shell (series 1 and 2), in accordance with ASTM A108.
Type D – Crimp termination – ferrous alloy shell (series 2), in accordance with ASTM A108.
Type Y – Eyelet termination – ferrous alloy shell (series 1), in accordance with ASTM A108.

1.2.4 Insert arrangement. The insert arrangements showing quantity, size, service rating, and positional location of contacts are as specified in MIL-STD-1669.

1.2.5 Contact style:

a. The following contact designators are for use with connectors that utilize standardized contact arrangements as specified in MIL-STD-1669:

C – Feedthrough contact.
P – Pin contacts.
S – Socket contacts.

The C, P, and S designators are used to indicate that connectors will be used with full compliments of the applicable standard contacts in accordance with MIL-STD-1669. These designators are part of the connector PIN and are marked on the connectors (see 1.1.1). Standard contacts are required to be qualified to SAE- AS39029.

Connectors that accommodate crimp removable contacts (P and S) may be ordered without standard contacts by adding an appropriate note on the purchase order. However, the connector PIN and the marking requirements remain unchanged (see 6.3).

b. The following contact designators are for use with connectors utilizing non-standard contact complements (i.e., contacts complements which are other than those specified in MIL-STD-1669):

A - Less pin contacts
B - Less socket contacts.

When A or B designators are used, standard contacts should not be supplied with the connectors. The contacts that will be used with the connectors should be ordered separately (see 3.7.1 and 6.3). The A and B designators are part of the connector PIN and should be marked on the connectors.

A and B contact designators should be specified in the following instances: Connectors are intended for use with contact complements that are not in accordance with the insert arrangements specified in MIL-STD-1669. As an example, the standard connector insert arrangement may require standard power contacts, but the user intends to populate the connector insert with other types of contacts, such as thermocouple contacts, coaxial contacts, etc., or with fiber optic termini.



Source: https://assist.dla.mil -- Downloaded: 2016-11-16T06:09Z
Check the source to verify that this is the current version before use.

NOTE: If inserts are populated with contacts other than the standard complements of contacts specified in MIL-STD-1669 for that insert arrangement, the connectors may not meet the requirements stated herein.

1.2.6 Insert position. The insert position is the angular position of the insert relative to the master key or keyway of the shell. Insert positions other than normal are indicated by letter designators in accordance with the alternate insert positions specified in MIL-STD-1669.

1.2.7 Military PIN. The military PIN for qualified connectors in accordance with MIL-DTL-26482, that are provided in accordance with this specification, should conform to the latest issue in effect of MIL-DTL-26482 and 1.1.1 herein.

1.3 Temperature.

1.3.1 Temperature (series 1). Series 1 connectors are rated for specified operation within a temperature range of -55°C (-67°F) to 125°C (257°F). The upper temperature is the maximum internal hot spot temperature resulting from any combination of electrical load and ambient temperature.

1.3.1.1 Insulation resistance (series 1). Insulation resistance varies with temperature as follows (see figure 1):

| Hot spot temperature | Minimum insulation resistance |
|---|---|
| 25°C (77°F) | 5,000 megohms |
| 105°C (221°F) | 12 megohms |
| 125°C (257°F) | 3 megohms |

1.3.1.2 Service life (series 1). Service life varies with temperature as follows (see figure 2):

| Hot spot temperature | Service life |
|---|---|
| 25°C (77°F) | continuous |
| 105°C (221°F) | 1,000 hours |
| 125°C (257°F) | 250 hours |

1.3.2 Temperature (series 2). Series 2 connectors are capable of specified operation within a temperature range of -55°C (-67°F) to 200°C (392°F) under any combination of electrical load and ambient temperature. These connectors are rated for specified operation for 1,000 hours, at 200°C (392°F) maximum internal hot spot temperature.

1.3.2.1 Insulation resistance (series 2). Insulation resistance limits vary with temperature as follows (see figure 3):

| Hot spot temperature | Minimum insulation resistance |
|---|---|
| 25°C (77°F) | 5,000 megohms |
| 200°C (392°F) | 500 megohms |



Source: https://assist.dla.mil -- Downloaded: 2016-11-16T06:09Z
Check the source to verify that this is the current version before use.

1.3.2.2 Service life (series 2). Service life varies with temperature as follows (see figure 4):

| Hot spot temperature | Service life |
|---|---|
| 25°C (77°F) | continuous |
| 200°C (392°F) | 1,000 hours |

1.4 Wire range accommodations. The wire range given in table II is to be accommodated by series 1 and series 2 connectors as indicated.

TABLE II. Wire range accommodations. 1/

| Wire Barrel Size | Wire Size | OD of finished wire, inch (mm) 2/ | | | |
|---|---|---|---|---|---|
| | | Series 1 | | Series 2 | |
| | | Min | Max | Min | Max |
| 20 | 24<br>22<br>20 | .047<br>(1.19)<br>3/ | .083<br>(2.11) | .040<br>(1.02) | .083<br>(2.11) |
| 16 | 20<br>18<br>16 | .066<br>(1.68) | .109<br>(2.77) | .053<br>(1.35) | .103<br>(2.62) |
| 12 | 14<br>12 | .097<br>(2.46) | .142<br>(3.61) | .097<br>(2.46) | .158<br>(4.01) |

1/ Dimensions are in inches. Metric equivalents are given for information only.
2/ Wire reference: SAE-AS22759.
3/ Minimum OD for solder contact connectors is .060 inch (1.52 mm).



Source: https://assist.dla.mil -- Downloaded: 2016-11-16T06:09Z
Check the source to verify that this is the current version before use.

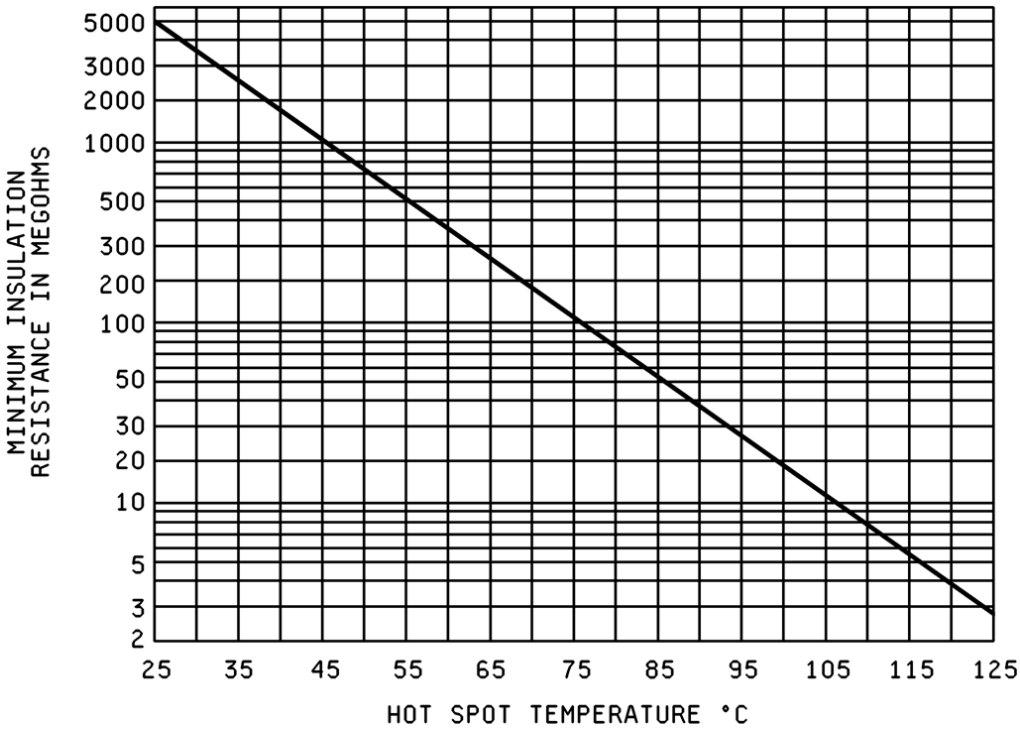


FIGURE 1. Minimum insulation resistance vs hot spot temperature (series 1).

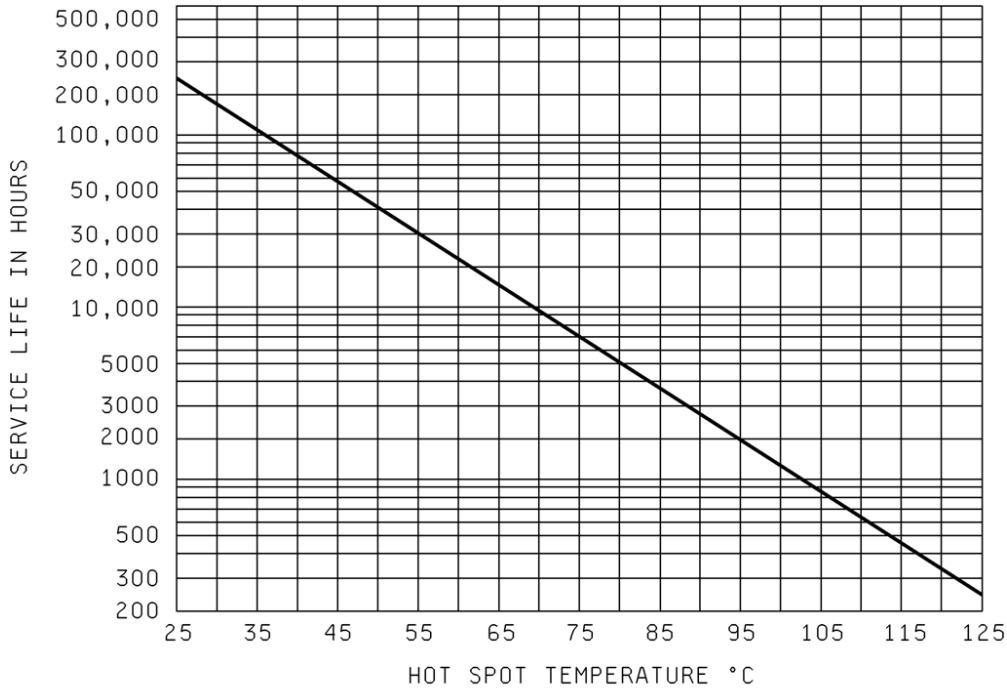


FIGURE 2. Expected service life vs hot spot temperature (series 1).



Source: https://assist.dla.mil -- Downloaded: 2016-11-16T06:09Z
Check the source to verify that this is the current version before use.

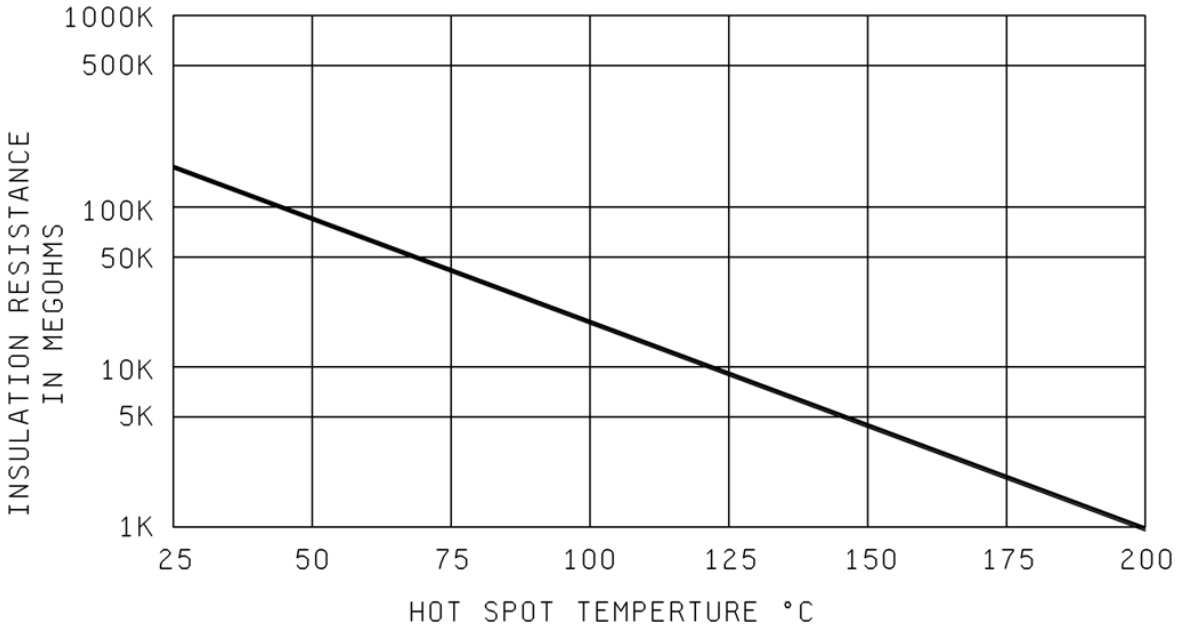


FIGURE 3. Insulation resistance vs hot spot temperature (series 2).

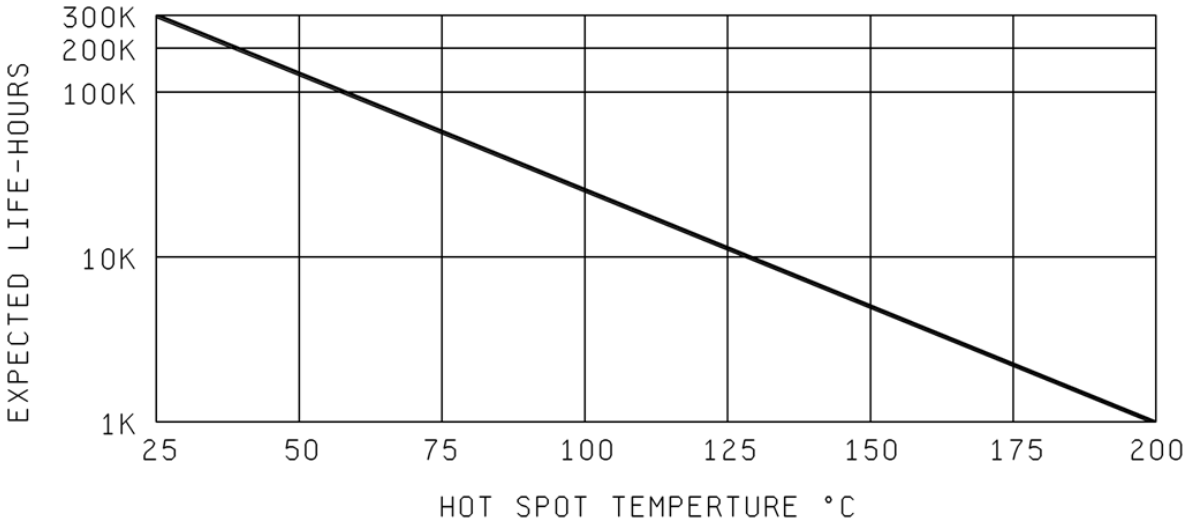


FIGURE 4. Expected service life vs hot spot temperature (series 2).



Source: https://assist.dla.mil -- Downloaded: 2016-11-16T06:09Z
Check the source to verify that this is the current version before use.

## 2. APPLICABLE DOCUMENTS

2.1 General. The documents listed in this section are specified in sections 3, 4, or 5 of this specification. This section does not include documents cited in other sections of this specification or recommended for addition information or as examples. While every effort has been made to ensure the completeness of this list, document users are cautioned that they must meet all specified requirements documents cited in sections 3, 4, or 5 of this specification, whether or not they are listed.

2.2 Government documents.

2.2.1 Specifications, standards, and handbooks. The following specifications, standards, and handbooks form a part of this document to the extent specified herein. Unless otherwise specified, the issues of these documents are those cited in the solicitation or contract (see 6.2).

DEPARTMENT OF DEFENSE SPECIFICATIONS

| | | |
|---|---|---|
| MIL-PRF-5606 | - | Hydraulic Fluid, Petroleum Base, Aircraft, Missile and Ordnance. |
| MIL-DTL-5624 | - | Turbine Fuel, Aviation, Grades JP-4 and JP-5. |
| MIL-PRF-7808 | - | Lubricating Oil, Aircraft Turbine Engine, Synthetic Base. |
| MIL-PRF-8516 | - | Sealing Compound, Polysulfide Rubber, Electric Connectors and Electric Systems, Chemically Cured. |
| MIL-A-8625 | - | Anodic Coatings for Aluminum and Aluminum Alloys. |
| MIL-DTL-22520 | - | Crimping Tools, Terminal, Hand, Wire Termination, General Specification for. |
| MIL-PRF-23699 | - | Lubricating Oil, Aircraft Turbine Engines, Synthetic Base. |
| MIL-DTL-38999 | - | Connectors, Electrical, Circular, Miniature, High Density, Quick Disconnect, (Bayonet, Threaded, and Breach Coupling), Environmental Resistant, Removable Crimp and Hermetic Solder Contacts, General Specification for. |
| MIL-I-81969/14 | - | Installing and Removal Tools, Connector Electrical Contact, Type III, Class 2, Composition B. |
| MIL-I-81969/17 | - | Installing and Removal Tools, Connector Electrical Contact, Type I, Class 1, Composition C. |
| MIL-I-81969/19 | - | Installing and Removal Tools, Connector Electrical Contact Type II, Class 1, Composition C. |
| MIL-I-81969/30 | - | Installing and Removal Tools, Connector Electrical Contact, Type II, Class 2, Composition C. |
| MIL-DTL-83488 | - | Coating, Aluminum, High Purity. |
| MIL-PRF-87937 | - | Cleaning Compound, Aerospace Equipment. |
| MS3112 | - | Connectors, Electrical, (Circular, Miniature, Quick Disconnect, Environment Resisting), Receptacle, (Box Mounting Flange, Bayonet Coupling, Solder Contact), (Series 1). |
| MS3119 | - | Connectors, Electrical, (Circular, Miniature, Quick Disconnect, Environment Resisting), Receptacle, (Thru-Bulkhead Mounting Flange, Bayonet Coupling), (Series 1). |
| MS3122 | - | Connectors, Receptacle, Electric, Crimp-Type, Box Mounting, Flange, No. 4 Holes, Bayonet Coupling. |
| MS3127 | - | Connectors, Receptacle, Electric, Crimp-Type, Box Mounting, Flange, No. 4/6 Holes, Bayonet Coupling. |
| MS3155 | - | Connector, Electric, Rear Accessory Design Standard. |



Source: https://assist.dla.mil -- Downloaded: 2016-11-16T06:09Z
Check the source to verify that this is the current version before use.

| | | |
|---|---|---|
| MS3187 | - | Plug, Sealing, for MIL-DTL-26482 and MIL-C-81703 (Navy) Electrical Connectors. |
| MS3460 | - | Test Gage, MIL-DTL-26482 Series 1 or MIL-C-81703 Series 2 Contact Retention Feature. |
| MS3461 | - | Test Gage, MIL-DTL-26482 Series 2 or MIL-C-81703 Series 3 Contact Retention Feature. |
| MS3462 | - | Test Gage, MIL-DTL-26482, Series 2 (Class N) or MIL-C-81703 Series 3 (Class N) Contact Retention Feature. |
| MS27488 | - | Plug, End Seal, Electric Connector. |

(See supplement 1 for list of MIL-DTL-26482 specification sheets).

(Copies of these documents are available online at https://assist.daps.dla.mil/quicksearch/ or from the Standardization Document Order Desk, 700 Robbins Avenue, Building 4D, Philadelphia, PA 19111-5094.)

DEPARTMENT OF DEFENSE STANDARDS

| | | |
|---|---|---|
| MIL-STD-202 | - | Test Methods for Electronic and Electrical Component Parts. |
| MIL-STD-790 | - | Standard Practice for Established Reliability and High Reliability Qualified Products List (QPL) Systems for Electrical, Electronic, and Fiber Optic Parts. |
| MIL-STD-810 | - | Test Method Standard for Environmental Engineering Considerations and Laboratory Tests. |
| MIL-STD-889 | - | Dissimilar Metals. |
| MIL-STD-1285 | - | Marking of Electrical and Electronic Parts. |
| MIL-STD-1669 | - | Insert Arrangements for MIL-DTL-26482 Environment Resisting, Circular Electrical Connectors. |

(Copies of these documents are available online at https://assist.daps.dla.mil/quicksearch/ or from the Standardization Document Order Desk, 700 Robbins Avenue, Building 4D, Philadelphia, PA 19111-5094.)

2.3 Non-Government publications. The following documents form a part of this specification to the extent specified herein. Unless otherwise specified, the issues of these documents are those cited in the solicitation or contract (see 6.2).

ASME INTERNATIONAL

ASME-B46.1 - Surface Texture (Surface Roughness, Waviness, and Lay).

(Copies of these documents are available online at http://www.asme.org or from the ASME International, Three Park Avenue, New York, NY 10016-5990.)



Source: https://assist.dla.mil -- Downloaded: 2016-11-16T06:09Z
Check the source to verify that this is the current version before use.

ASTM INTERNATIONAL

| | | |
|---|---|---|
| ASTM B85/B85M | - | Standard Specification for Aluminum-Alloy Die Castings. |
| ASTM B339 | - | Standard Specification for Pig Tin. |
| ASTM A342/A342M | - | Standard Test Methods for Permeability of Feebly Magnetic Materials. |
| ASTM B488 | - | Standard Specification for Electrodeposited Coatings of Gold for Engineering Uses. |
| ASTM B545 | - | Standard Specification for Electrodeposited Coatings of Tin. |
| ASTM B841 | - | Standard Specification for Electrodeposited Coatings of Zinc Nickel Alloy Deposits. |
| ASTM D4814 | - | Standard Specification for Automotive Spark-Ignition Engine Fuel. |
| ASTM A967 | - | Chemical Passivation Treatments for Stainless Steel Parts. |

(Copies of these documents are available at http://www.astm.org or ASTM International, 100 Barr Harbor Drive, PO Box C700, West Conshohocken, Pennsylvania 19428-2959.)

ELECTRONIC INDUSTRIES ALLIANCE (EIA)

| | | |
|---|---|---|
| EIA-359 | - | EIA Standard Colors for Color Identification and Coding. |
| EIA-364 | - | Electrical Connector/Socket Test Procedures including Environment Classifications. |
| EIA-364-02 | - | Air Leakage Test Procedure for Electrical Connectors. |
| EIA-364-03 | - | Altitude Immersion Test Procedure for Electrical Connectors. |
| EIA-364-05 | - | Contact Insertion, Release and Removal Force Test Procedure for Electrical Connectors. |
| EIA-364-06 | - | Contact Resistance Test Procedure for Electrical Connectors. |
| EIA-364-13 | - | Mating and Unmating Forces Test Procedure for Electrical Connectors. |
| EIA-364-14 | - | Ozone Exposure Test Procedure for Electrical Connectors. |
| EIA-364-17 | - | Temperature Life With or Without Electrical Load Test Procedure for Electrical Connectors and Sockets. |
| EIA-364-20 | - | Withstanding Voltage Test Procedures for Electrical Connectors, Sockets and Coaxial Contacts. |
| EIA-364-21 | - | Insulation Resistance Test Procedure for Electrical Connectors, Sockets, and Coaxial Contacts. |
| EIA-364-24 | - | Maintenance Aging Test Procedure for Electrical Connectors. |
| EIA-364-25 | - | Probe Damage Test Procedure for Electrical Connectors. |
| EIA-364-26 | - | Salt Spray Test Procedure for Electrical Connectors, Contacts and Sockets. |
| EIA-364-27 | - | Mechanical Shock (Specified Pulse) Test Procedure for Electrical Connectors. |
| EIA-364-28 | - | Vibration Test Procedure for Electrical Connectors and Sockets. |
| EIA-364-29 | - | Contact Retention Test Procedure for Electrical Connectors. |
| EIA-364-31 | - | Humidity Test Procedure for Electrical Connectors and Sockets. |
| EIA-364-32 | - | Thermal Shock (Temperature Cycling) Test Procedure for Electrical Connectors and Sockets. |
| EIA-364-35 | - | Insert Retention Test Procedure for Electrical Connectors. |
| EIA-364-42 | - | Impact Test Procedure for Electrical Connectors. |
| EIA-557 | - | EIA Statistical Process Control Systems. |

(Copies of these documents are available online at http://www.eia.org or from the Electronic Industries Alliance, Technology Strategy & Standards Department, 2500 Wilson Boulevard, Arlington VA 22201.)



Source: https://assist.dla.mil -- Downloaded: 2016-11-16T06:09Z
Check the source to verify that this is the current version before use.

INSTITUTE FOR INTERCONNECTING AND PACKAGING ELECTRONIC CIRCUITS

| | | |
|---|---|---|
| J-STD-006 | - | Electronic Grade Solder Alloys and Fluxed and Non-Fluxed Solid Solders for Electronic Soldering Applications, Requirements for. |

(Copies of these documents are available online from http://www.ipc.org or from the Institute for Interconnecting and Packaging Electronic Circuits, 2215 Sanders Road, North Brook, IL 60062-6135.)

NCSL INTERNATIONAL

| | | |
|---|---|---|
| NCSL Z540.1 | - | Laboratories, Calibration, and Measuring and Test Equipment. |

(Copies of these documents are available online at http://www.ncsli.org or from NCSL International 2995 Wilderness Place, Suite 107 Boulder, Colorado 80301-5404)

SAE INTERNATIONAL

| | | |
|---|---|---|
| SAE-AMS-QQ-P-416 | - | Plating, Cadmium (Electrodeposited). |
| SAE-AMS-QQ-S-763 | - | Steel Bars, Wire, Shapes, and Forgings; Corrosion Resistant. |
| SAE-AMS1424 | - | Fluid, Deicing/Anti-Icing, Aircraft, SAE Type I. |
| SAE-AIR4789 | - | Evaluating Corrosion Testing of Electrical Connectors and Accessories for the Purpose of Qualification. |
| SAE-AIR1351 | - | Aerospace Electrical and Electronic Wiring Devices and Accessories, Manufacturers' Identification of. |
| SAE-AS22759 | - | Wire, Electric, Fluoropolymer-Insulated, Copper or Copper Alloy. |
| SAE-AMS-C-26074 | - | Coatings, Electroless Nickel, Requirements for. |
| SAE-AS39029 | - | Contact, Electrical Connector, General Specification for. |
| SAE-AS39029/4 | - | Contacts, Electric, Pin, Crimp Removable, Composition A. |
| SAE-AS39029/5 | - | Contacts, Electric, Socket, Crimp Removable, Composition A. |
| SAE-AS39029/7 | - | Contacts, Electric, Connector, Pin, Crimp Removable, Composition D, Type 3 (200ºC), Shielded Cable Applications, Size 12. |
| SAE-AS39029/8 | - | Contacts, Electric, Connector, Socket, Crimp Removable, Composition D, Type 3 (200ºC), Shielded Cable Applications, Size 12. |
| SAE-AS39029/9 | - | Contacts, Electric, Pin, Crimp Removable, Composition C, Thermocouple. |
| SAE-AS39029/10 | - | Contacts, Electrical Connector, Socket, Crimp Removeable, Thermocouple, (for MIL-C-26482 Series 2, MIL-C-81703 Series 3, MIL-C-83723 Series 3, and MIL-C-83733 Connectors). |
| SAE-AS39029/23 | - | Contacts, Electric, Pin, Shielded, Crimp, Removable (Size 8). |
| SAE-AS39029/24 | - | Contacts, Electric, Socket, Shielded, Crimp, Removable (Size 8). |
| SAE-AS39029/25 | - | Contacts, Electric, Pin, Shielded, Crimp, Removable, Composition A, 200ºC (Size 12). |
| SAE-AS39029/26 | - | Contacts, Electric, Socket, Shielded, Crimp, Removable (Size 12). |
| SAE-AS39029/31 | - | Contact, Electrical Connector, Pin, Crimp Removable, (for MIL-C-26482 Series 1, MIL-C-26500 and MIL-C-26518 Connectors). |
| SAE-AS39029/32 | - | Contacts, Electrical Connector, Socket, Crimp Removable, (for MIL-C-26482 Series 1, and MIL-C-26500 Connectors). |



Source: https://assist.dla.mil -- Downloaded: 2016-11-16T06:09Z
Check the source to verify that this is the current version before use.

| | | |
|---|---|---|
| SAE-AS31971 | - | Pin, Gage, for Socket Contact Engagement Test. |
| SAE-AS85049 | - | Connector Accessories, Electrical General Specification for. |

(Copies of these documents are available at http://www.sae.org or SAE World Headquarters, 400 Commonwealth Drive, Warrendale, PA 15096-0001.)

2.4 Order of precedence. Unless otherwise noted herein or in the contract, in the event of a conflict between the text of this document and the references cited herein (except for related specification sheets), the text of this document takes precedence. Nothing in this document, however, supersedes applicable laws and regulations unless a specific exemption has been obtained.

3. REQUIREMENTS

3.1 Specification sheet. The individual item requirements shall be as specified herein and in accordance with the applicable specification sheet. In the event of any conflict between the requirements of this specification and the specification sheet, the latter shall govern.

3.2 Qualification. The connectors and accessories furnished under this specification shall be products that are authorized by the qualifying activity for listing on the applicable qualified products list before contract award (see 4.3 and 6.5).

Upon application for qualification testing, the qualifying activity shall verify that the manufacturer has established written procedures to assure actual connector performance to the requirements of this specification. Emphasis shall be on the molded plastic retention system piece parts prior to assembly into the connector. These procedures shall include:

a. Analysis of minimum/maximum dimensions of contacts and molded plastic retention discs.
b. Acceptable levels for:
    (1) Plastic mixtures and chemical tests.
    (2) Pureness of materials.
    (3) Flash control in plastic parts.
    (4) Method for flash removal.
c. Contact retention tests on molded plastic retention disc based on analysis of (a).
d. Insertion and removal forces for pin and socket contacts in plastic disc.

When approved by the qualifying activity, these shall become the minimum requirements for molded plastic contact retention systems prior to assembly into connectors for that manufacturer.

3.2.1 Quality.

3.2.1.1 Statistical process control (SPC). The contractor shall implement and use SPC techniques in the manufacturing process for parts covered by this specification. The SPC program shall be developed and maintained in accordance with EIA-557. The SPC program shall be documented and maintained as part of the overall reliability assurance program as specified in MIL-STD-790.

3.3 Materials. Materials which are not specified (see 3.1), or which are not specifically described herein shall be of the lightest practical weight and shall be suitable for the purpose intended.

3.3.1 Fungus resistance. Materials used in the construction of these connectors shall be fungus inert (see 4.2).



Source: https://assist.dla.mil -- Downloaded: 2016-11-16T06:09Z
Check the source to verify that this is the current version before use.

3.3.2 Dissimilar metals. When dissimilar metals are used in intimate contact with each other, protection against galvanic corrosion shall be provided. The use of dissimilar metals in contact, which tend toward active galvanic corrosion (particularly brass, copper, or steel used in contact with aluminum or aluminum alloy) is not acceptable. However, metal plating of dissimilar base metals to provide similar or suitable abutting surfaces is permitted. The use of dissimilar metals separated by a suitable insulating material is also permitted. Dissimilar metals and compatible couples are defined in accordance with MIL-STD-889.

3.3.3 Nonmagnetic materials (except classes H and N). The relative permeability of the connector assembly shall be less than 2.0µ when measured with an indicator in accordance with ASTM A342/A342M.

3.3.4 Contact material.

3.3.4.1 Series I (except class H). Nonremovable contacts shall be made of suitably conductive materials. Hoods shall be made of passivated stainless steel. Springs shall be suitably protected or made from noncorrosive materials.

3.3.4.2 Classes H and N. Contacts shall be made of ferrous alloy or as specified. The materials used shall be compatible with the requirements of this specification.

3.3.5 Contact finish. When tested as specified in 4.6.53, contact finish shall meet the requirements as specified herein.

3.3.5.1 Series 1 solder contact finish (except class H). Nonremovable contacts shall have a finish as specified in 3.3.5.1.1 or 3.3.5.1.2. Each desired finish shall be qualified.

3.3.5.1.1 Overall finish. Contact body shall be gold plated in accordance with ASTM B488 type II, grade C, class 1, .00005 inches (50 microinches) (0.00127 mm) minimum, over a suitable underplate, except silver shall not be used. Accessory members of the socket contacts need not be plated, but shall comply with the requirements for dissimilar metals specified in 3.3.2.

3.3.5.1.2 Localized finish. Contact body shall be gold plated in accordance with ASTM B488 type II, grade C, class 1 applied to areas X and Y (see figure 7), as applicable. All other body surfaces shall be finished with gold in accordance with ASTM B488, any type and grade (no thickness specified). The entire surface of the contact body shall be nickel underplated in accordance with MIL-DTL-38999, appendix A, class 2, .00003 to .000150 inches (30 to 150 microinches) (0.000762 to 0.00381 mm) minimum. Gold discoloration in areas other than areas X and Y is acceptable.

3.3.5.2 Series 1 and 2, class H.

3.3.5.2.1 Types A and B, and type C (series 2). Nonremovable contacts shall be gold plated in accordance with ASTM B488, .000050 inches (50 microinches) (0.00127 mm) minimum, over a suitable underplate, except silver shall not be used. Wire marks on the back of the contact around the “nonfunctional” outside diameter (OD) of the wire well caused by electrical contact for plating are permissible.

3.3.5.2.2 Types C and Y (series 1). Contact plating for class H, types C and Y, shall be gold plated to a minimum of .000050 inches (50 microinches) (0.00127 mm) in accordance with ASTM B488, over a suitable underplate, except silver shall not be used. Wire marks caused by electrical contact during plating around the “nonfunctional” outside diameter of the nonmating end of the contact are permissible.



Source: https://assist.dla.mil -- Downloaded: 2016-11-16T06:09Z
Check the source to verify that this is the current version before use.

3.3.6 RFI finger spring. RFI finger springs shall be made of a spring temper copper alloy suitably protected to prevent corrosion.

3.3.7 Dielectric materials.

3.3.7.1 Insert and grommet. Insert and grommet materials shall be high grade dielectric having hardness, electrical, and mechanical characteristic suitable for the purpose intended.

3.3.7.1.1 Rigid (except classes H and N). Rigid dielectric materials shall be high grade having electrical and mechanical characteristics suitable for the purpose intended. The impact strength shall be such that the material shall not chip, crack, or break during assembly or normal service.

3.3.7.1.2 Rigid (classes H and N). The rigid dielectric materials in hermetic connectors shall be of a single piece of vitreous material.

3.3.7.1.3 Resilient. Resilient dielectric materials shall conform to the requirements specified herein. The resilient faces of series 1 and 2 connectors shall be designed so that the performance requirements are met when mated to counterpart connectors of either series 1 or 2.

3.3.7.1.4 Insert faces (series 1). Insert faces or blankets to a minimum depth of 0.080 inch (2.03 mm) 0.033 inch (0.84 mm) on class H shall be resilient within a Shore A range of 35-85 for crimp contact connectors and class H connectors and 65-85 for solder contact connectors.

3.3.7.1.5 Pin insert faces (series 2). Pin insert faces shall be resilient within a Shore A range of 30 to 55.

3.3.8 Potting form (series 1). Potting forms shall be made of translucent nylon. The form shall incorporate a means for attachment to the connector.

3.3.9 Material and finish for shells, coupling rings and metallic accessories.

3.3.9.1 Series 1 (except class H). Shells, coupling rings, and protective covers shall be made of high grade aluminum alloys. Die castings, if used, shall be in accordance with ASTM B85/B85M. Accessories (backshells) shall be in accordance with SAE-AS85049.

3.3.9.2 Shells, coupling rings, and accessories (backshells) (series 2).

a. Shells, coupling rings, and accessories shall be made of impact extruded, machined or die cast aluminum alloy.
b. Accessories (backshells) shall be in accordance with SAE-AS85049.

3.3.9.3 Shells (classes H and N). Shell materials shall be as specified (see 3.1).

3.3.9.4 Finish (series 1, except class H). Aluminum parts and accessory hardware, unless otherwise specified, shall be in accordance with the following designations:

| | | |
|---|---|---|
| Finish D (175°C) | - | Pure dense electrodeposited aluminum in accordance with MIL-DTL-83488, Type II, to withstand 500 hours dynamic salt spray. Color shall be nonreflective, conductive, and shall meet the requirements as specified herein. |



Source: https://assist.dla.mil -- Downloaded: 2016-11-16T06:09Z
Check the source to verify that this is the current version before use.

| | | |
|---|---|---|
| Finish T (175°C) | - | Nickel fluorocarbon polymer. Nickel with fluorocarbon polymer additives over a suitable underplate to withstand 500 hours dynamic salt spray. Color shall be nonreflective, conductive, and shall meet the requirements as specified herein. |
| Finish W (175°C) | - | Cadmium plate in accordance with SAE-AMS-QQ-P-416 over a suitable underplate to withstand 500 hours salt spray. Resultant color to be olive drab, conductive. |
| Finish Z (175°C) | - | Zinc-nickel alloy in accordance with ASTM B841, Type D (black) over a suitable underplate to withstand 500 hours dynamic salt spray. Color shall be nonreflective, conductive, and shall meet the requirements as specified herein. |

3.3.9.4.1 Finish (series 1, class H). Unless otherwise specified (see 3.1), stainless steel shells (shell types A and B) shall be passivated in accordance with ASTM A967. Tin plated ferrous alloy shells (shell type C) shall be in accordance with ASTM B339 and ASTM B545 over nickel in accordance with MIL-DTL-38999 appendix A. The resultant finish shall be suitable for soft soldering to a mounting surface.

3.3.9.5 Finish (series 2). Metal parts shall be of a corrosion resistant material or be protected to meet the performance requirements of this specification. The type of finish and class designation shall be as follows:

| | | |
|---|---|---|
| Class A | - | Hard, anodic, nonconductive in accordance with MIL-A-8625, type III, .0008 inch (0.02032 mm) minimum. |
| Class L | - | Electrically conductive, electroless nickel plating in accordance with SAE-AMS-C-26074, class 3 for molded/extruded alloy and class 4 for heat treated alloys, grade B, finish shall withstand 500 hours salt spray. Use of a suitable underplate is permissible. |
| Classes H and N | - | Finish shall be tin plated in accordance with ASTM B545 over nickel underplate in accordance with MIL-DTL-38999 appendix A. Minimum plating thickness shall be in accordance with applicable MS sheets. |
| Class W (175°C) | - | Cadmium plate in accordance with SAE-AMS-QQ-P-416 over a suitable underplate to withstand 500 hours dynamic salt spray. Resultant color to be olive drab, conductive. |
| Class D (175°C) | - | Pure dense electrodeposited aluminum in accordance with MIL-DTL-83488, Type II, to withstand 500 hours dynamic salt spray. Finish shall be conductive and nonreflective and shall meet the requirements as specified herein. |
| Class Z (175°C) | - | Zinc-nickel alloy in accordance with ASTM B841, type D (black) over a suitable underplate to withstand 500 hour dynamic salt spray. Finish shall be conductive and nonreflective and shall meet the requirements as specified herein. |



Source: https://assist.dla.mil -- Downloaded: 2016-11-16T06:09Z
Check the source to verify that this is the current version before use.

Class T (175°C) - Nickel fluorocarbon polymer. Nickel with fluorocarbon polymer additives over a suitable underplate to withstand 500 hour dynamic salt spray. Finish shall be conductive and nonreflective and shall meet the requirements as specified herein.

3.3.10 Bayonet pins. Bayonet pins shall be made of corrosion resistant steel in accordance with SAE-AMS-QQ-S-763. To indicate that the connectors are fully mated when the bayonet pins are fully visible, the top of the bayonet pins shall be colored blue, orange or yellow and shall be a contrasting color as compared to the color of the connector body (see 3.4.4.1).

3.3.11 Recycled, recovered, or environmentally preferable materials. Recycled, recovered, or environmentally preferable materials should be used to the maximum extent possible, provided that the material meets or exceeds the operational and maintenance requirements, and promotes economically advantageous life cycle costs.

3.4 Design and construction. Connectors and accessories shall be designed and constructed to withstand normal handling incident to installation and maintenance in service. Connector interchangeability control dimensions shall be as specified on figure 5. Rear accessory interchangeability control dimensions of series 2 connectors shall be as specified on figure 6.

3.4.1 Contacts. Contacts shall be so designed that neither the pins nor the sockets will be damaged during mating of counterpart connectors. A quantity of crimp contacts consisting of the normal complement, plus one spare contact for connector arrangements having 26 contacts or less and two spares for arrangements over 26 contacts shall be included in the unit package. Unless otherwise specified, connectors shall be supplied with contacts (see 1.2.5 and 6.3).

3.4.1.1 Solder contacts (series 1). Solder contacts shall conform to the dimensions on figure 7 and shall be nonremovable from the insert. Solder cups shall be so designed that during soldering no components will be damaged. A vent hole or equivalent may be provided to prevent air entrapment during soldering.

3.4.1.2 Crimp contacts (series 1).

3.4.1.2.1 Crimp power contacts. Crimp power contacts shall be qualified to and in accordance with SAE-AS39029/31 or SAE-AS39029/32.

3.4.1.2.2 Crimp shielded contacts. Size 8 shielded contacts shall be qualified to and in accordance with SAE-AS39029/23 or SAE-AS39029/24. Size 12 shielded contacts shall be qualified to and in accordance with SAE-AS39029/25 or SAE-AS39029/26. Unless otherwise specified, shielded contacts shall not be supplied with the connector (see 6.3).

3.4.1.2.3 Insertion and removal tools (series 1). The individual contacts shall be positively retained in the connector when installed with the applicable contact insertion tools in accordance with MIL-I-81969/17 and MIL-I-81969/19. The individual contacts shall be capable of being removed from the connector when using the applicable contact removal tools in accordance with MIL-I-81969/17 and MIL-I-81969/19.



Source: https://assist.dla.mil -- Downloaded: 2016-11-16T06:09Z
Check the source to verify that this is the current version before use.

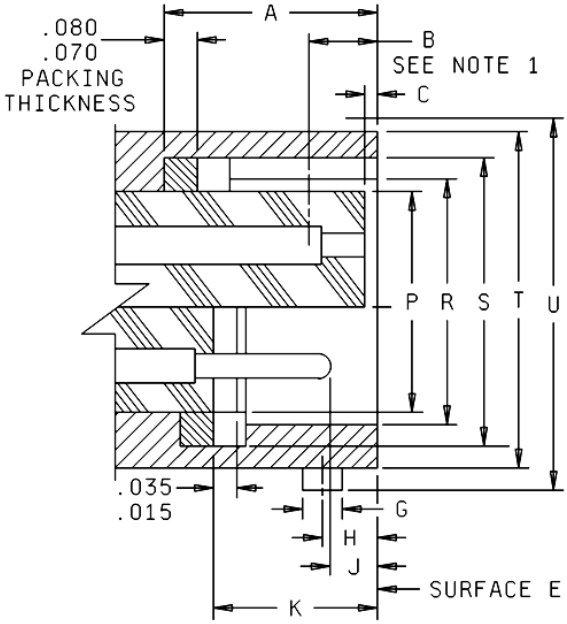


SERIES 1 RECEPTACLE CONNECTOR

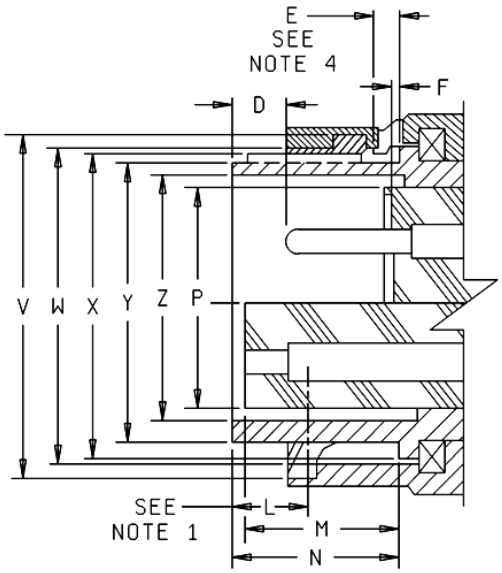


SERIES 1 PLUG CONNECTOR

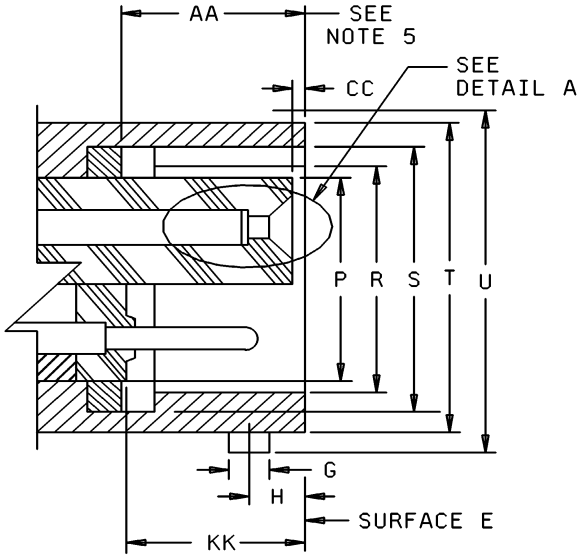


SERIES 2 RECEPTACLE CONNECTOR

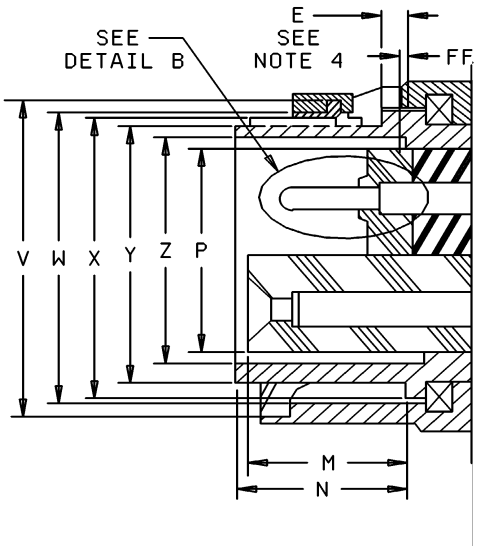


SERIES 2 PLUG CONNECTOR

FIGURE 5. Connector intermateability control dimensions (series 1 and series 2).



Source: https://assist.dla.mil -- Downloaded: 2016-11-16T06:09Z
Check the source to verify that this is the current version before use.

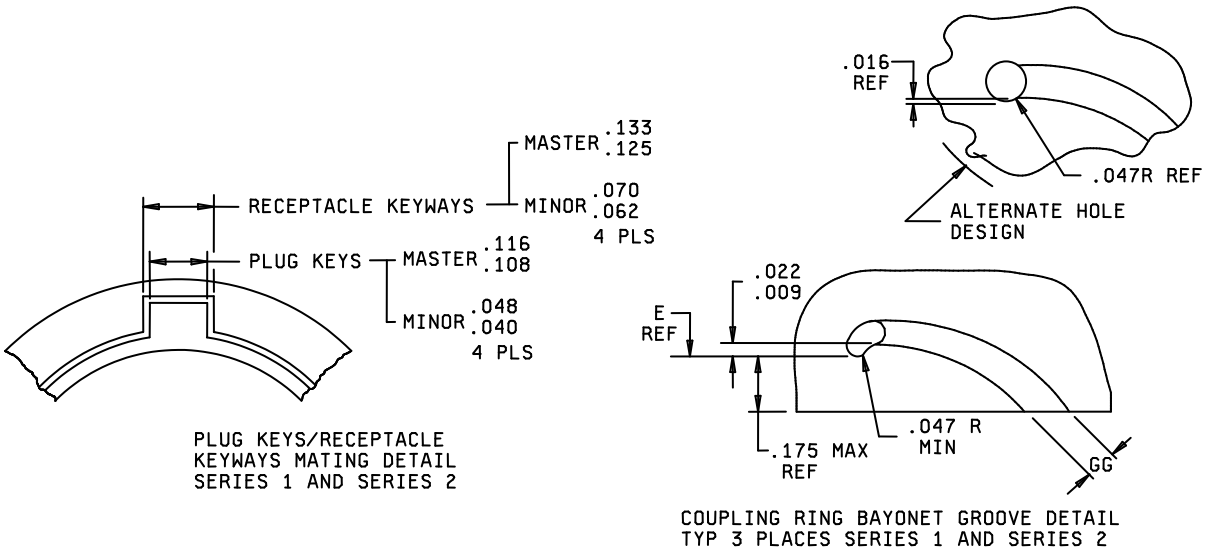


FIGURE 5. Connector intermateability control dimensions (series 1 and series 2) – Continued.



Source: https://assist.dla.mil -- Downloaded: 2016-11-16T06:09Z
Check the source to verify that this is the current version before use.

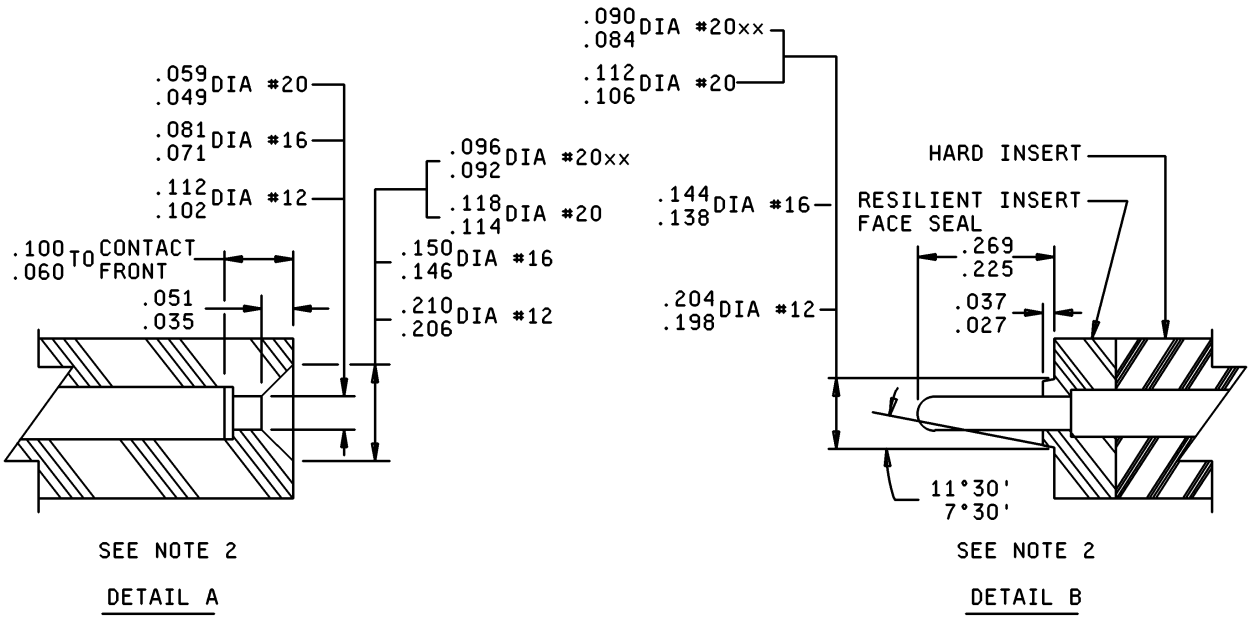


| Shell size | Applies to series | | | | | |
|---|---|---|---|---|---|---|
| | 1 only | 1 only | 1 only | 1 only | 1 and 2 | 1 only |
| | A package location | B (see note 1) | C socket insert location | D pin contact location | E (see note 4) | F pin insert location |
| 8 | .392 (9.96) .372 (9.45) | .153 (3.89) .075 (1.91) | .025 (0.64) .005 (0.13) | .085 (2.16) .055 (1.40) | .133 (3.38) .093 (2.36) | .050 (1.27) .030 (0.76) |
| 10 | | | | | | |
| 12 | | | | | | |
| 14 | | | | | | |
| 16 | | | | | | |
| 18 | | | | | | |
| 20 | .454 (11.53) .434 (11.02) | .215 (5.46) .137 (3.48) | .087 (2.21) .067 (1.70) | | | .112 (2.84) .092 (2.34) |
| 22 | | | | | | |
| 24 | | | | | .172 (4.37) .132 (3.35) | |

FIGURE 5. Connector intermateability control dimensions (series 1 and series 2) – Continued.



Source: https://assist.dla.mil -- Downloaded: 2016-11-16T06:09Z
Check the source to verify that this is the current version before use.

| Shell size | Applies to series | | | | | |
|---|---|---|---|---|---|---|
| | 1 and 2 | 1 and 2 | 1 only | 1 only | 1 only | 1 and 2 |
| | G<br>bay pin<br>dia | H<br>bay pin<br>location | J<br>pin<br>contact<br>location | K<br>pin<br>insert<br>location | L<br>(see note 1) | M<br>socket<br>insert<br>location |
| 8 | .084 (2.13)<br>.076 (1.93) | .100 TP<br>(2.54) | .095 (2.41)<br>.065 (1.65) | .332 (8.43)<br>.312 (7.92) | .143 (3.63)<br>.065 (1.65) | .357 (9.07)<br>.337 (8.56) |
| 10 | | | | | | |
| 12 | | | | | | |
| 14 | | | | | | |
| 16 | | | | | | |
| 18 | | | | | | |
| 20 | | | .157 (3.99)<br>.127 (3.22) | .394 (10.01)<br>.374 (9.50) | | .419 (10.64)<br>.399 (10.13) |
| 22 | | | | | | |
| 24 | .131 (3.33)<br>.123 (3.12) | .109 TP<br>(2.77) | | | | |

| Shell size | Applies to series | | | | |
|---|---|---|---|---|---|
| | 1 and 2 | 1 and 2 | 1 and 2 | 1 and 2 | 1 and 2 |
| | N<br>shoulder<br>location | P<br>max insert<br>dia | R<br>shell<br>ID | S<br>dia over<br>keyways | T<br>shell<br>OD |
| 8 | .363 (9.22)<br>.343 (8.71) | .285 (7.24) | .367 (9.32)<br>.361 (9.17) | .417 (10.59)<br>.406 (10.31) | .474 (12.04)<br>.468 (11.89) |
| 10 | | .402 (10.21) | .495 (12.57)<br>.489 (12.42) | .545 (13.84)<br>.534 (13.56) | .591 (15.01)<br>.585 (14.86) |
| 12 | | .516 (13.11) | .612 (15.54)<br>.606 (15.39) | .694 (17.63)<br>.683 (17.35) | .751 (19.08)<br>.745 (18.92) |
| 14 | | .641 (16.28) | .737 (18.72)<br>.731 (18.57) | .819 (20.80)<br>.808 (20.52) | .876 (22.25)<br>.870 (22.10) |
| 16 | | .766 (19.46) | .862 (21.89)<br>.856 (21.74) | .944 (23.98)<br>.933 (23.70) | 1.001 (25.43)<br>.995 (25.27) |
| 18 | | .855 (21.72) | .967 (24.56)<br>.961 (24.41) | 1.044 (26.52)<br>1.033 (26.24) | 1.126 (28.60)<br>1.120 (28.45) |
| 20 | .425 (10.79)<br>.405 (10.29) | .980 (24.89) | 1.092 (27.74)<br>1.086 (27.58) | 1.169 (29.69)<br>1.158 (29.41) | 1.251 (31.78)<br>1.245 (31.62) |
| 22 | | 1.105 (28.07) | 1.217 (30.91)<br>1.211 (30.76) | 1.294 (32.87)<br>1.283 (32.59) | 1.376 (34.95)<br>1.370 (34.80) |
| 24 | | 1.229 (31.22) | 1.342 (34.09)<br>1.336 (33.93) | 1.419 (36.04)<br>1.408 (35.76) | 1.501 (38.13)<br>1.495 (37.97) |

FIGURE 5. Connector intermateability control dimensions (series 1 and series 2) – Continued.



Source: https://assist.dla.mil -- Downloaded: 2016-11-16T06:09Z
Check the source to verify that this is the current version before use.

| Shell size | Applies to series | | | | | |
|---|---|---|---|---|---|---|
| | 1 and 2 | 1 and 2 | 1 and 2 | 1 and 2 | 1 and 2 | 1 and 2 |
| | U dia over bays | V cpig R groove dia | W cpig R ID | X dia over keys | Y shell OD | Z min shell ID |
| 8 | .563 (14.30)<br>.547 (13.89) | .581 (14.76)<br>.570 (14.48) | .486 (12.34)<br>.480 (12.19) | .403 (10.24)<br>.392 (9.96) | .358 (9.09)<br>.352 (8.94) | .292 (7.42) |
| 10 | .680 (17.27)<br>.664 (16.86) | .702 (17.83)<br>.691 (17.55) | .607 (15.42)<br>.601 (15.27) | .531 (13.49)<br>.520 (13.21) | .486 (12.34)<br>.480 (12.19) | .409 (10.39) |
| 12 | .859 (21.82)<br>.843 (21.41) | .876 (22.25)<br>.865 (21.97) | .766 (19.46)<br>.760 (19.30) | .680 (17.27)<br>.669 (16.99) | .598 (15.19)<br>.592 (15.04) | .523 (13.28) |
| 14 | .984 (25.00)<br>.968 (24.59) | 1.000 (25.40)<br>.989 (25.12) | .890 (22.61)<br>.884 (22.45) | .805 (20.45)<br>.794 (20.17) | .723 (18.36)<br>.717 (18.21) | .648 (16.46) |
| 16 | 1.108 (28.14)<br>1.092 (27.94) | 1.125 (28.58)<br>1.114 (28.30) | 1.015 (25.78)<br>1.009 (25.63) | .930 (23.62)<br>.919 (23.34) | .848 (21.54)<br>.842 (21.39) | .772 (19.61) |
| 18 | 1.233 (31.32)<br>1.217 (30.91) | 1.250 (31.75)<br>1.239 (31.47) | 1.141 (28.98)<br>1.135 (28.83) | 1.030 (26.16)<br>1.019 (25.88) | .948 (24.08)<br>.942 (23.93) | .862 (21.89) |
| 20 | 1.358 (34.49)<br>1.342 (34.09) | 1.375 (34.93)<br>1.364 (34.65) | 1.265 (32.13)<br>1.259 (31.98) | 1.155 (29.34)<br>1.144 (29.06) | 1.073 (27.25)<br>1.067 (27.10) | .987 (25.07) |
| 22 | 1.483 (37.67)<br>1.467 (37.26) | 1.500 (38.10)<br>1.489 (37.82) | 1.390 (35.31)<br>1.384 (35.15) | 1.280 (32.51)<br>1.269 (32.23) | 1.198 (30.43)<br>1.192 (30.28) | 1.111 (28.22) |
| 24 | 1.610 (40.89)<br>1.594 (40.49) | 1.629 (41.38)<br>1.618 (41.10) | 1.515 (38.48)<br>1.509 (38.33) | 1.405 (35.69)<br>1.394 (35.41) | 1.323 (33.60)<br>1.317 (33.45) | 1.237 (31.42) |

| Shell size | Applies to series | | | | |
|---|---|---|---|---|---|
| | 2 only | 2 only | 2 only | 1 and 2 | 2 only |
| | AA (see note 5) | CC socket insert | FF pin insert | GG bay pin groove | KK pin insert |
| 8 | .335 (8.51)<br>.315 (8.00) | .022 (0.56)<br>.005 (0.13) | .045 (1.14)<br>.025 (0.64) | .106 (2.69)<br>.089 (2.26) | .334 (8.48)<br>.317 (8.05) |
| 10 | | | | | |
| 12 | | | | | |
| 14 | | | | | |
| 16 | | | | | |
| 18 | | | | | |
| 20 | .397 (10.08)<br>.377 (9.58) | .084 (2.13)<br>.067 (1.70) | .107 (2.72)<br>.087 (2.21) | | .396 (10.06)<br>.379 (9.63) |
| 22 | | | | | |
| 24 | | | | .153 (3.89)<br>.136 (3.45) | |

FIGURE 5. Connector intermateability control dimensions (series 1 and series 2) – Continued.



Source: https://assist.dla.mil -- Downloaded: 2016-11-16T06:09Z
Check the source to verify that this is the current version before use.

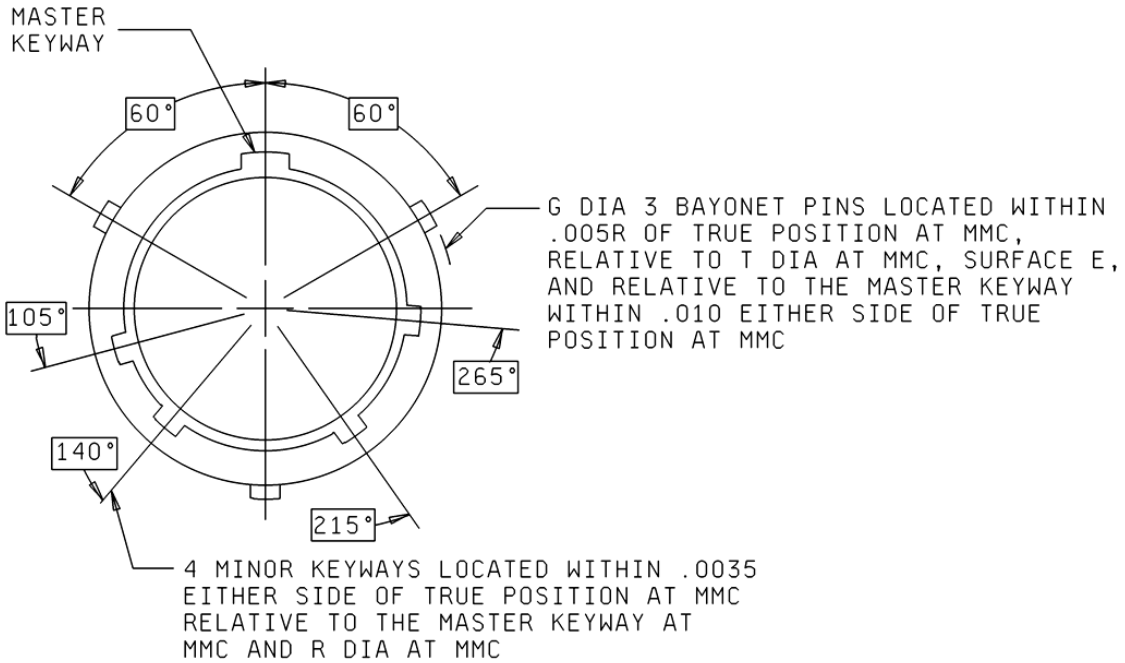


RECEPTACLE KEYWAYS AND BAYONET PINS

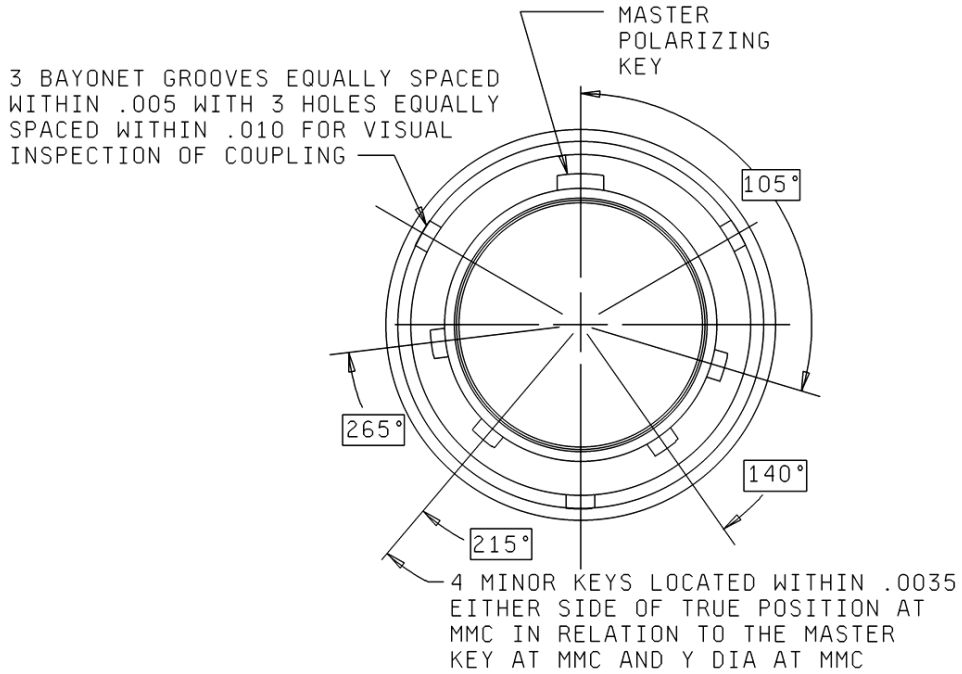


PLUG KEYS AND BAYONET GROOVES

FIGURE 5. Connector intermateability control dimensions (series 1 and series 2) – Continued.



Source: https://assist.dla.mil -- Downloaded: 2016-11-16T06:09Z
Check the source to verify that this is the current version before use.

| Inches | mm | Inches | mm | Inches | mm |
|---|---|---|---|---|---|
| .0035 | 0.089 | .062 | 1.57 | .125 | 3.18 |
| .005 | 0.13 | .070 | 1.78 | .133 | 3.38 |
| .009 | 0.23 | .071 | 1.80 | 138 | 3.51 |
| .010 | 0.25 | .080 | 2.03 | .144 | 3.66 |
| .015 | 0.38 | .081 | 2.06 | .146 | 3.71 |
| .016 | 0.41 | .084 | 2.13 | .150 | 3.81 |
| .022 | 0.56 | .090 | 2.29 | .175 | 4.44 |
| .027 | 0.69 | .092 | 2.34 | .198 | 5.03 |
| .035 | 0.89 | .096 | 2.44 | .204 | 5.18 |
| .037 | 0.94 | .100 | 2.54 | .206 | 5.23 |
| .040 | 1.02 | .102 | 2.59 | .210 | 5.33 |
| .047 | 1.19 | .108 | 2.74 | .225 | 5.72 |
| .048 | 1.22 | .112 | 2.84 | .269 | 6.83 |
| .049 | 1.24 | .114 | 2.90 | | |
| .051 | 1.29 | .116 | 2.95 | | |
| .059 | 1.50 | .118 | 3.00 | | |
| .060 | 1.52 | | | | |

NOTES:

1. ‘B’ and ‘L’ distance between end of shell and the point at which a gage pin having the same basic diameter as the mating contact and a square face first engages socket contact spring (applies to series 1 only).
2. Details ‘A’ and ‘B’ apply to both plugs and receptacles (applies to series 2 only).
3. ‘XX’ where space does not permit use of normal diameters, reduced diameters are used. Refer to applicable MS connector sheets for affected arrangements (applies to series 2 only).
4. ‘E’ distance from plug shell shoulder to locking point of coupling ring (applies to series 1 and series 2).
5. ‘AA’ initial contact with static seal (applies to series 2 only).
6. Dimensions are in inches. Metric equivalents are given for information only.

FIGURE 5. Connector intermateability control dimensions (series 1 and series 2) – Continued.



Source: https://assist.dla.mil -- Downloaded: 2016-11-16T06:09Z
Check the source to verify that this is the current version before use.

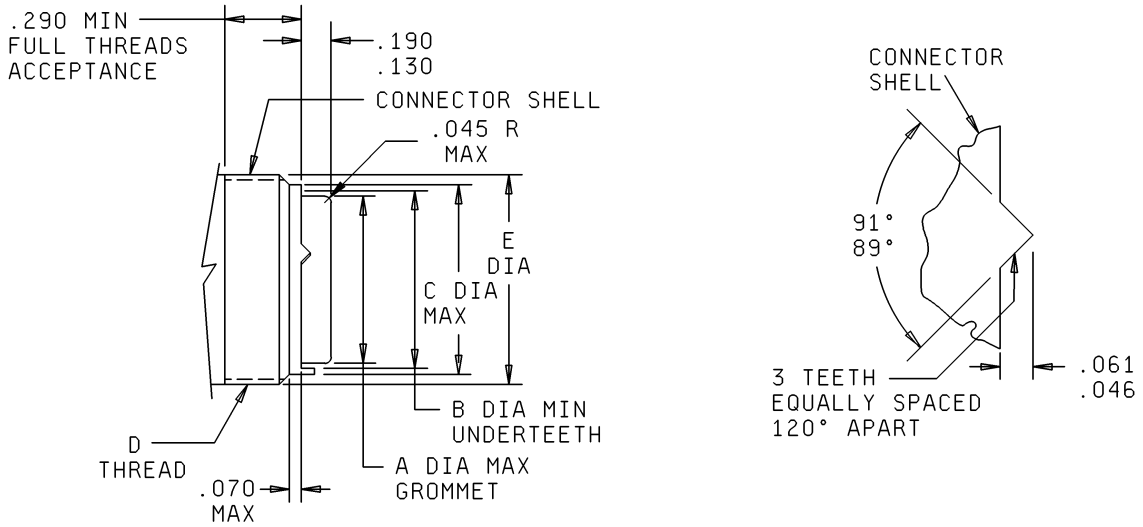


| Shell size | A | B | C | D thread (class 2) | E dia. | |
|---|---|---|---|---|---|---|
| | | | | | Receptacle (max) | Plug (min) |
| 8 | .305 (7.75) | .370 (9.40) | .437 (11.10) | .500-20 UNF | .499 (12.67) | .470 (11.94) |
| 10 | .405 (10.29) | .497 (12.62) | .572 (14.53) | .625-24 UNEF | .625 (15.88) | .600 (15.24) |
| 12 | .531 (13.49) | .613 (15.57) | .687 (17.45) | .750-20 UNEF | .750 (19.05) | .724 (18.39) |
| 14 | .665 (16.89) | .738 (18.75) | .812 (20.62) | .875-20 UNEF | .875 (22.23) | .849 (21.56) |
| 16 | .790 (20.07) | .863 (21.92) | .937 (23.80) | 1.000-20 UNEF | 1.000 (25.40) | .974 (24.74) |
| 18 | .869 (22.07) | .919 (23.34) | .992 (25.20) | 1.0625-18 UNEF | 1.062 (26.97) | 1.030 (26.16) |
| 20 | .994 (25.25) | 1.044 (26.52) | 1.117 (28.37) | 1.1875-18 UNEF | 1.187 (30.15) | 1.154 (29.31) |
| 22 | 1.119 (28.42) | 1.169 (29.69) | 1.242 (31.55) | 1.3125-18 UNEF | 1.312 (33.32) | 1.279 (32.49) |
| 24 | 1.244 (31.60) | 1.294 (32.87) | 1.367 (34.72) | 1.4375-18 UNEF | 1.437 (36.50) | 1.404 (35.66) |

FIGURE 6. Rear accessory interchangeability control dimensions (series 2 only).



Source: https://assist.dla.mil -- Downloaded: 2016-11-16T06:09Z
Check the source to verify that this is the current version before use.

| Inches | mm | Inches | mm |
|---|---|---|---|
| .045 | 1.14 | .849 | 21.56 |
| .046 | 1.17 | .863 | 21.92 |
| .061 | 1.55 | .869 | 22.07 |
| .070 | 1.78 | .875 | 22.23 |
| .130 | 3.30 | .919 | 23.34 |
| .190 | 4.83 | .937 | 23.80 |
| .290 | 7.37 | .974 | 24.74 |

NOTES:
1. Dimensions are in inches.
2. Metric equivalents are given for information only.

FIGURE 6. Rear accessory interchangeability control dimensions (series 2 only) - Continued.



Source: https://assist.dla.mil -- Downloaded: 2016-11-16T06:09Z
Check the source to verify that this is the current version before use.

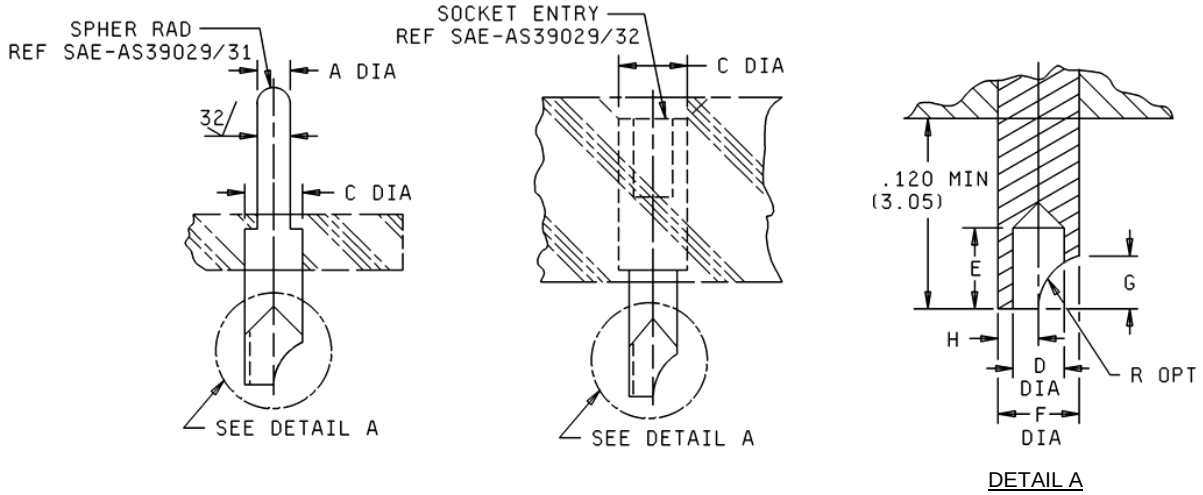


CLASSES E, P AND J

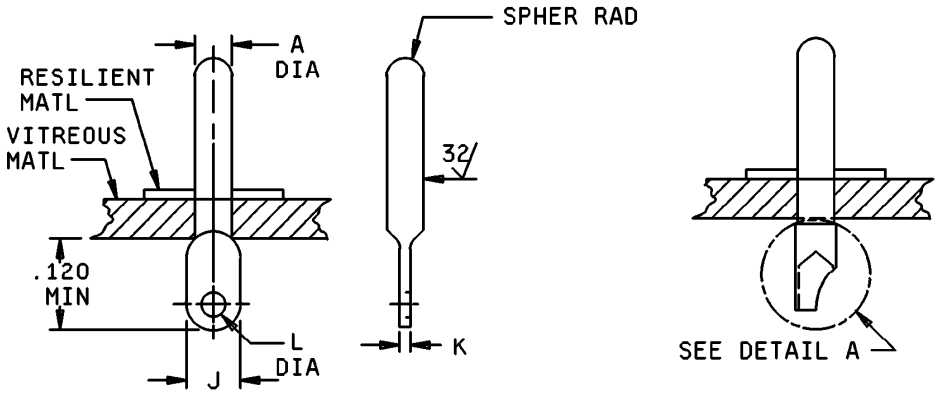


CLASS H

FIGURE 7. Solder type contacts (series 1).



Source: https://assist.dla.mil -- Downloaded: 2016-11-16T06:09Z
Check the source to verify that this is the current version before use.

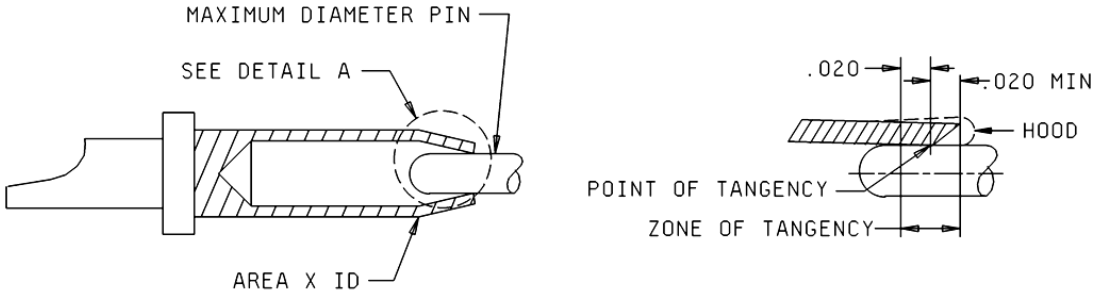


SOCKET CONTACT WITH INTEGRAL PRESSURE MEMBER (HOOD REMOVED)
AREAS OF APPLICATIONS OF LOCALIZED FINISH

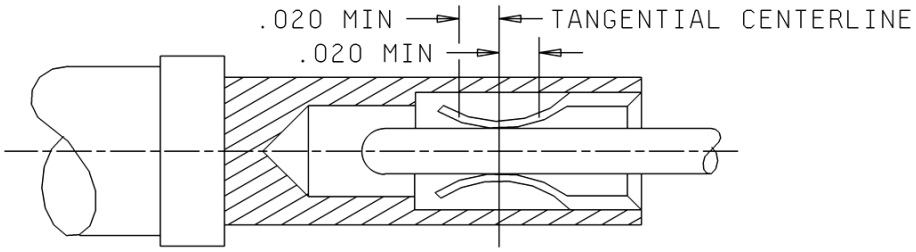


SOCKET CONTACT WITH SEPARATE PRESSURE MEMBER AS PRIMARY CURRENT CARRYING INTERFACE
AREAS OF APPLICATIONS OF LOCALIZED FINISH

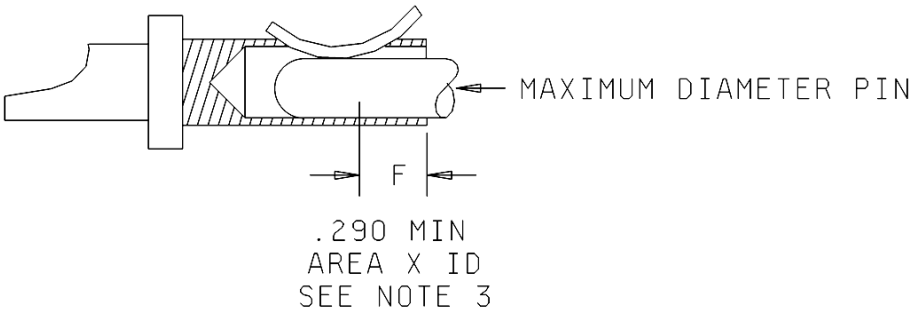


SOCKET CONTACT WITH SEPARATE PRESSURE MEMBERS
AREAS OF APPLICATIONS OF LOCALIZED FINISH

FIGURE 7. Solder type contacts (series 1) – Continued.



Source: https://assist.dla.mil -- Downloaded: 2016-11-16T06:09Z
Check the source to verify that this is the current version before use.

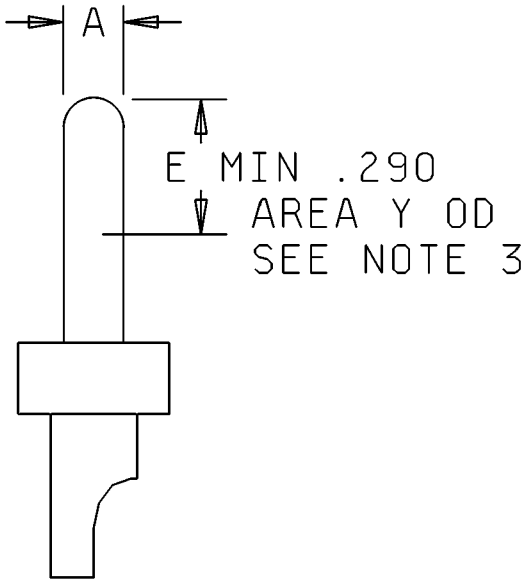


PIN CONTACTS
AREAS OF APPLICATIONS OF LOCALIZED FINISH

| Shell size | A ± .001 (0.02) | C max | D min | E + .063 (1.60) - .016 (0.41) | F min | F max | G ± .031 (0.79) | H ± .010 (0.25) | J max | K min | L min |
|---|---|---|---|---|---|---|---|---|---|---|---|
| 20 | .040 (1.02) | .100 (2.54) | .042 (1.07) | .125 (3.18) | .061 (1.55) | .088 (2.24) | .094 (2.39) | .037 (0.94) | .085 (2.16) | .012 (0.30) | .042 (1.07) |
| 16 | .0625 (1.59) | .130 (3.30) | .069 (1.75) | .188 (4.78) | .096 (2.44) | .116 (2.95) | .125 (3.18) | .054 (1.37) | .115 (2.92) | .020 (0.51) | .065 (1.65) |
| 12 | .094 (2.39) | .190 (4.83) | .112 (2.84) | | .139 (3.53) | .150 (3.81) | | .070 (1.78) | .190 (4.83) | | .096 (2.44) |

NOTES:
1. Dimensions are in inches.
2. Metric equivalents are given for information only.
3. Dimension “F” equals length of maximum electrical contact (wiping) area plus .020 (0.51 mm) minimum. Maximum wipe shall be equal to maximum “E” of mating pin engagement minus the spherical radius.
4. Surface finish shall be in accordance with ASME-B46.1.
5. Dimension “A” is measured over plating.

FIGURE 7. Solder type contacts (series 1) – Continued.



Source: https://assist.dla.mil -- Downloaded: 2016-11-16T06:09Z
Check the source to verify that this is the current version before use.

3.4.1.3 Through-bulkhead contacts (series 1). The engaging ends of contacts in through-bulkhead connectors shall conform dimensionally to corresponding details on figure 7 (classes E, P and J). Contacts shall be nonremovable.

3.4.1.4 Crimp contacts (series 2).

3.4.1.4.1 Crimp power contacts. Crimp power contacts shall be in qualified to and in accordance with SAE-AS39029/4, /5, /9, or /10. Neither the pin nor socket shall be damaged by twisting or forcing during mating and unmating of the connectors, or by insertion of contacts into or removal of contacts from the connector with the tools specified for insertion or removal.

3.4.1.4.2 Crimp shielded contacts. Size 12 shielded contacts shall be qualified to and in accordance with SAE-AS39029/7 or SAE-AS39029/8. Contacts shall be inserted and removed with the same tools used for the size 12 power contacts. Unless otherwise specified, shielded contacts shall not be supplied with the connector (see 6.3).

3.4.1.4.3 Insertion and removal tools (series 2). Tools required for assembly or disassembly of pin and socket contacts into their connector inserts, shall be in accordance with MIL-I-81969/30 or MIL-I-81969/14. Unless otherwise specified, connectors shall be supplied with insertion and removal tools (see 6.3).

3.4.2 Insert design and construction.

3.4.2.1 Insert design and construction (series 1). Inserts shall be of voidless construction and shall be secured to prevent rotation within the shell. The inserts shall be nonremovable from the shell and shall be installed in the position in accordance with MIL-STD-1669.

3.4.2.1.1 Inserts for crimp contact connectors (series 1). In crimp contact connectors, the insert and wire sealing grommet or insulating spacer shall be one integral part. The design shall permit the removal and reinsertion of individual contacts without any damage detrimental to connector performance to any part of the insert, including contact retention mechanisms or the sealing members, in accordance with MIL-I-81969/17 and MIL-I-81969/19 tools.

3.4.2.1.2 Contact arrangement (series 1). Contacts shall be arranged in accordance with MIL-STD-1669. All solder cup openings shall be oriented in such a manner that the openings face the terminus of the indexing radius in accordance with MIL-STD-1669 and shall be perpendicular to the center line coinciding with the indexing radius, within +/- 15°. All eyelet terminations shall be oriented with the eyelet openings facing the same direction and in parallel to the center line coinciding with the indexing radius in accordance with MIL-STD-1669, within +/- 15°.

3.4.2.1.3 Contact spacing. Minimum nominal center-to-center spacing and minimum dielectric thickness, contact to shell, or contact to contact shall be in accordance with the values shown in table III.

3.4.2.1.4 Contact alignment (series 1). Inserts for socket contacts shall provide an overall side-play of the socket contacts of .0025 to .0075 inch (0.063 to 0.190 mm) from the required position to facilitate alignment with mating pin contacts.

3.4.2.1.5 Class H (series 1). Contacts shall be fused into the vitreous inserts of class H connectors. A resilient face shall be permanently bonded to the insert to ensure an interfacial seal in mating.



Source: https://assist.dla.mil -- Downloaded: 2016-11-16T06:09Z
Check the source to verify that this is the current version before use.

TABLE III. Minimum nominal contact spacing and minimum dielectric thickness. 1/ 2/

| Classes and finishes | Contact size | Service rating I | | | Service rating II | | |
|---|---|---|---|---|---|---|---|
| | | Center to center | Dielectric | | Center to center | Dielectric | |
| | | | rigid | resilient | | rigid | resilient |
| A, D, E, F, J, L, P, N, T, W and Z | 20<br>16<br>12 | .130 (3.30)<br>.168 (4.27)<br>.205 (5.21) | .006<br>(0.15) | .008<br>(0.20) | .162 (4.11)<br>.190 (4.82)<br>.230 (5.84) | .008<br>(0.20) | .012<br>(0.30) |
| H | 20<br>16<br>12 | .130 (3.30)<br>.168 (4.27)<br>.205 (5.21) | | .030<br>(0.76) | .162 (4.11)<br>.190 (4.82)<br>.230 (5.84) | | .030<br>(0.76) |

1/ Dimensions are in inches.
2/ Metric equivalents are given for information only.

3.4.2.2 Insert design and construction (series 2). The inserts shall be rigid plastic and so designed and constructed with proper-sections and radii that they will not chip, crack or break during normal assembly or service. Hollow-type inserts shall not be used. The inserts shall be nonremovable, mechanically retained, and bonded to the shell with the design and construction such that all air paths between cavities are eliminated. The insert engaging faces shall be designed and constructed such that all air paths between cavities at the connector interfaces shall be eliminated when the connectors are mated. The inserts shall be so designed that positive locking of the contacts in the inserts is provided. Socket insert face shall be of a rigid plastic material. The design shall permit the removal and reinsertion of individual contacts without any damage detrimental to connector performance to any part of the insert, including contact retention mechanisms and the sealing members, using the applicable tool in accordance with MIL-I-81969/14 or MIL-I-81969/30.

3.4.2.2.1 Inserts (series 2, class H). Class H receptacle inserts shall be so designed and constructed with proper sections and radii that they will not readily chip, crack or break during normal assembly or service. The inserts shall be nonremovable from the shell and shall meet the requirements of this specification.

3.4.2.2.2 Inserts (series 2, class N). The inserts shall be bonded assembly forming a single unit; the front shall be of a vitreous material with a resilient face and the back shall be rigid plastic. The inserts shall be so designed and constructed with proper-sections and radii that they will not chip, crack or break during normal assembly or service. Hollow-type inserts shall not be used. The insert assembly shall be nonremovable such that all air paths between cavities are eliminated. The insert engaging connector interfaces shall be designed and constructed such that all air paths between cavities at the connector interfaces shall be eliminated when the connectors are mated. The inserts shall be so designed that positive locking of the crimp terminals in the rigid plastic is provided.

3.4.2.2.3 Contact insertion and extraction (series 2, except class H). The connector design shall permit individual insertion and extraction of contacts without removing the insert or sealing numbers. Insertion of the contacts into and extraction of the contacts from the insert shall be accomplished from the wire side of the connector and with the aid of tools specified in 3.4.1.4.3. Insertion/extraction shall be possible with a full complement of maximum outside diameter (OD) wire (see table IV).



Source: https://assist.dla.mil -- Downloaded: 2016-11-16T06:09Z
Check the source to verify that this is the current version before use.

TABLE IV. Maximum wire diameter. 1/ 2/

| Contact size | Maximum OD |
|---|---|
| 20 | .083 (2.11) |
| 16 | .103 (2.62) |
| 12 | .158 (4.01) |

1/ Dimensions are in inches.
2/ Metric equivalents are given for information only.

3.4.2.2.4 Contact arrangement identification. The contact positions shall be permanently designated in contrasting color on the front face of the insert and on the rear face of the wire sealing grommet as noted on the insert arrangement in accordance with MIL-STD-1669, and on figure 8.

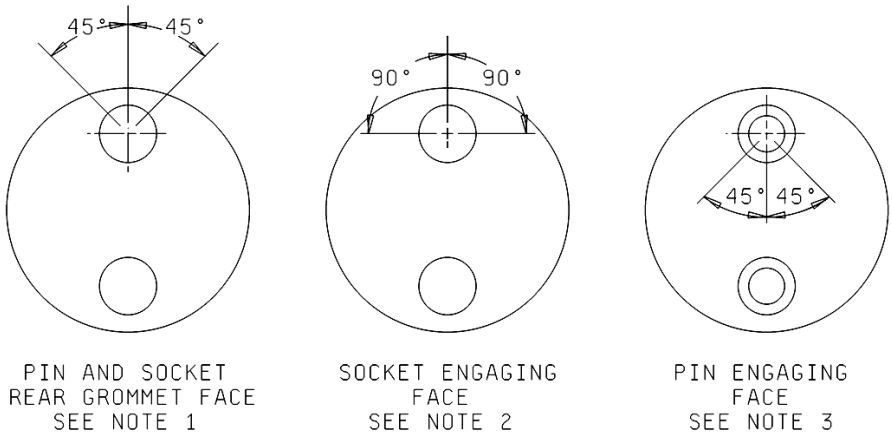


NOTES:
1. Contact identification letters on rear grommet face of socket and pin insert shall be within 45° either side of vertical centerline above the contact cavity.
2. Letters shall be placed on socket insert engaging face as shown. The letters shall be above the horizontal centerline of the chamfered lead-ins. Where space precludes the application of letters an ever expanding orbital line is permissible.
3. Letters on the engaging face of the pin insert shall be on the raised seal barrier or at the base of the raised seal barrier above or beside the pin contact cavity. Letters shall not extend into the lower sector of the raised seal barrier which extends 45° to either side of the vertical centerline. Where space precludes their application an expanding orbital line is permissible.
4. On outer row of contacts individual cavity identification may be deleted from those cavities where space precludes its application.
5. Underscoring of lower case letters is optional.

FIGURE 8. Insert cavity identification locations (series 2).

3.4.2.2.5 Insert position (series 2). The inserts shall be positioned with respect to the shell within the tolerance specified on figure 5.



Source: https://assist.dla.mil -- Downloaded: 2016-11-16T06:09Z
Check the source to verify that this is the current version before use.

3.4.2.2.6 Alternate insert position (series 2). Alternate insert position shall be in accordance with MIL-STD-1669.

3.4.2.2.7 Contact alignment (series 2). The alignment of pin contacts assembled into either plug or receptacle shall be in accordance with MIL-STD-1669 when measured at the engaging end of the contacts.

3.4.2.2.8 Contact float (series 2). Socket contacts assembled in either plug or receptacle shall allow for contact float of 0.0025 to 0.0075 inch (0.063 to 0.190 mm) from true alignment position.

3.4.3 Shell design (except classes H and N). The connector shells shall be seamless and shall retain their inserts in a positive manner. The shells for the connectors shall be designed to accept and retain a cable support or other accessory as shown in the applicable MS standard. Connectors shall be designed in such a manner as to incorporate a static peripheral seal located within the receptacles.

3.4.3.1 Jam nut receptacle shells. Jam nut mounting connectors shall be provided with a mounting nut and an O-ring seal.

3.4.3.2 Connector shell (series 2). The connector shell shall have a blue color band in accordance with EIA-359 indicating a rear release connector. The location of the color band shall be as specified (see 3.1).

3.4.3.3 Backshell accessories (series 2). Backshells shall conform to requirements specified (see 3.1). The backshells shall have provision for safety wiring. In addition, they shall have wire sealing grommet compression capability. Backshells shall be free of any sharp edges or other configurations that could cause damage to wire extending through them. In addition, the RFI backshell shall provide metal-to-metal bottoming of the follower to the rear face of the connector shell. Interchangeability dimensions shall be as specified in MS3155.

3.4.3.4 RFI finger spring (series 2) (RFI plugs). Grounding springs shall have a minimum of six fingers per inch. Spring fingers shall be designed to make electrical contact with the mating shell without interfering with proper engagement. The grounding springs shall be permanently fixed to the shell periphery.

3.4.4 Engagement of connectors. Counterpart connectors of any arrangement and accessories shall be capable of being fully engaged and disengaged without the use of tools. Engagement of connectors shall be defined as full insertion of pins into sockets and proper sealing of the mating insert faces. Full engagement shall be indicated by an audible sound at the completion of the coupling cycle, and a positive detent shall be included in the coupling mechanism to lock connectors in the engaged position.

3.4.4.1 Coupling. Connectors shall be coupled to counterpart connectors by means of bayonet coupling rings. Coupling shall be accomplished by clockwise rotation of the coupling ring; uncoupling by counterclockwise rotation. The bayonet coupling rings shall be knurled to provide a gripping surface. Coupling pins on the receptacle shall have end surfaces of contrasting color to the coupling ring (see 3.3.10). The ends of the pins shall be visible through suitable holes in the coupling ring when the connectors are fully engaged and the coupling ring is in the locked position.

3.4.4.2 Shell polarization. Polarization of connectors shall be accomplished by matched integral key(s) and keyway(s) of counterpart connectors. The polarization of counterpart connectors shall take place before coupling rings are engaged, and before any pin contacts can touch the opposing insert face or socket of the counterpart connector.



Source: https://assist.dla.mil -- Downloaded: 2016-11-16T06:09Z
Check the source to verify that this is the current version before use.

3.4.4.3 Lubrication. Bayonet coupling slots shall be coated with a suitable lubricant. Features which are intended to provide potting compound anchorage shall be free of lubricant. Accessory threads of series 1 shall be coated with a suitable lubricant.

3.4.4.4 Engagement seal. Connectors shall contain sealing means so that engaged connectors comply with the requirements specified herein. The design of the seal shall be such that in mated connectors all paths between adjacent contacts and between contacts and shells are eliminated. There shall be interfacial mating of the engaged connector insert to provide dielectric under compression of .005 inch (0.13 mm) minimum.

3.4.4.5 Protective covers and storage receptacles (series 1). When mated to counterpart connectors, the protective covers and storage receptacles shall maintain the connector free of moisture, shall prevent air leakage, and shall comply with the applicable requirements of this specification.

3.4.5 Wire sealing.

3.4.5.1 Classes E and F connectors (series 1). Class E and F connectors, except MS3112, MS3119, MS3122 and MS3127 shall be provided with a wire-sealing resilient grommet and gland nut capable of sealing on wires of the sizes specified in table II.

3.4.5.1.1 Solder contact connectors (series 1). Class E solder contact connectors shall be provided with a removable resilient grommet and retaining feature. The grommet shall be designed to fit firmly against the rear face of the insert and around each contact and wire termination so that any air path from each contact termination to all other terminations and the shell is interrupted by dielectric material under compression of .005 inch (0.13 mm) minimum.

3.4.5.1.2 Crimp contact connectors (series 1). Crimp contact connectors shall be provided with an integral grommet and insert.

3.4.5.2 Class P connectors (series 1). Class P connectors shall be provided with a plastic potting form suitable to accept and bond to MIL-PRF-8516 potting material. Inserts of class P connectors shall be so designed that potting material will adhere to the shell and insert without treatment by the user.

3.4.5.3 Class H connectors (series 1). Class H connectors shall not be supplied with wire sealing grommet; however, the shells and inserts shall be so designed that MIL-PRF-8516 potting material will adhere to the insert without treatment by the user.

3.4.5.4 Class J connectors (series 1). Class J connectors shall be provided with a resilient gland and gland nut capable of sealing on appropriate single-jacketed multi-conductor cables.

3.4.5.5 Grommet sealing plugs (series 1). The grommets of classes E and F connectors shall be designed to accept sealing plugs in accordance with MS3187 or MS27488, in lieu of wire where unwired contacts are employed. Fifteen percent of the number of contacts but not less than one, shall be included in the unit package. Unless otherwise specified, connectors shall be supplied with grommet sealing plugs (see 6.3).

3.4.5.6 Wire sealing members (rear grommet) (series 2, classes A, D, L, T, W and Z). The wire sealing member shall provide suitable sealing for overall wire diameters listed in table II, and shall not be removable from the shell. The seal shall accept a full complement of wire approaching the minimum OD or a full complement of wire approaching the maximum OD.



Source: https://assist.dla.mil -- Downloaded: 2016-11-16T06:09Z
Check the source to verify that this is the current version before use.

3.4.5.7 Grommet sealing plugs (series 2, classes A, D, L, T, W and Z). Grommet sealing plugs for unused contact cavities shall be in accordance with MS3187 or MS27488. The same sealing plugs shall be utilized in both connector plugs and receptacles. Fifteen percent of the number of contacts, but not less than one, shall be enclosed in the unit package. Unless otherwise specified, connectors shall be supplied with grommet sealing plugs (see 6.3).

3.4.6 Receptacle mounting. Receptacle mounting shall be one of the following as specified (see 3.1):

a. Flange mounting.
b. Jam nut mounting.
c. Solder mounting.

3.5 Intermateability and interchangeability.

3.5.1 Intermateability. Connectors conforming to this specification shall be intermateable. When different series of connectors or different types of contacts (crimp or solder) are used in a mated pair of connectors, the minimum performance requirements (temperature, sealing, etc) shall be met.

3.5.2 Interchangeability. All connectors and accessories having the same MS standard PIN shall be completely interchangeable with each other with respect to installation (physical) and performance (function) as specified herein.

3.6 Performance. Connectors shall perform as follows when subjected to the conditions and tests specified. Unless otherwise specified, class A connectors must meet the performance requirements of class L.

3.6.1 Maintenance aging (crimp contact connectors). After being tested as specified in 4.6.2, all crimp contact connectors shall be capable of conforming to this specification. Contact retention (see 4.6.32), shall be performed on contacts subjected to the maintenance aging test.

3.6.2 Mating and unmating forces (coupling torque) (series 1). When tested as specified in 4.6.3, mating and unmating of protective covers and of counterpart connectors with the maximum number of contacts installed, shall meet the torque requirements in table V.

TABLE V. Coupling torque (series 1).

| Shell size | Torque, inch pounds (Newton-meters) | |
|---|---|---|
| | Maximum engagement and disengagement | Minimum disengagement |
| 8 | 8 (.904 N-m) | 1 (.113 N-m) |
| 10 | 12 (1.36 N-m) | |
| 12 | 16 (1.81 N-m) | 2 (.226 N-m) |
| 14 | 20 (2.26 N-m) | 4 (.452 N-m) |
| 16 | 24 (2.71 N-m) | |
| 18 | 28 (3.16 N-m) | |
| 20 | 32 (3.61 N-m) | 6 (.678 N-m) |
| 22 | 36 (4.07 N-m) | 7 (.791 N-m) |
| 24 | 44 (4.97 N-m) | |



Source: https://assist.dla.mil -- Downloaded: 2016-11-16T06:09Z
Check the source to verify that this is the current version before use.

3.6.3 Mating and unmating forces (coupling torque) (series 2). When tested as specified in 4.6.4, completely assembled connectors, except RFI plugs, shall meet the torque requirements in table VI. Mating and unmating forces for RFI shielded plugs shall not exceed the values specified in table VI by more than 20 percent.

TABLE VI. Coupling torque (series 2).

| Shell size | Torque, inch-pounds (Newton-meters) | |
|---|---|---|
| | Maximum engagement and disengagement | Minimum disengagement |
| 8 | 8 (.904 N-m) | 1 (.113 N-m) |
| 10 | 10 (1.13 N-m) | |
| 12 | 14 (1.58 N-m) | 2 (.226 N-m) |
| 14 | 17 (1.92 N-m) | 4 (.452 N-m) |
| 16 | 23 (2.60 N-m) | |
| 18 | 26 (2.94 N-m) | |
| 20 | 31 (3.50 N-m) | 6 (.678 N-m) |
| 22 | 38 (4.29 N-m) | 7 (.791 N-m) |
| 24 | | |

3.6.4 Contact resistance (series 1). When tested as specified in 4.6.5, solder contacts in the mated condition or mated contacts consisting of crimp contacts mated to solder contacts shall meet the contact resistance requirements specified in table VII. Crimp contacts in the mated condition shall meet the contact resistance requirements specified in SAE-AS39029.

TABLE VII. Contact resistance limits (series 1).

| Connector class | Wire barrel size | Wire size | Maximum voltage drop | | | |
|---|---|---|---|---|---|---|
| | | | Initial mV | | After corrosion mV | |
| E, F, J, and P | 20 | 24<br>22<br>20 | 45<br>45<br>55 | | 55<br>55<br>65 | |
| | 16 | 20<br>18<br>16 | 45<br>45<br>50 | | 55<br>55<br>60 | |
| | 12 | 14<br>12 | 45<br>50 | | 55<br>60 | |
| H | 20<br>16<br>12 | 20<br>16<br>12 | Maximum voltage drop | | | |
| | | | Initial | | After corrosion | |
| | | | Avg mV | Indiv mV | Avg mV | Indiv mV |
| | | | 70<br>65<br>65 | 105<br>95<br>95 | 90<br>80<br>80 | 165<br>165<br>165 |



Source: https://assist.dla.mil -- Downloaded: 2016-11-16T06:09Z
Check the source to verify that this is the current version before use.

3.6.5 Contact resistance (series 2).

3.6.5.1 Contact resistance (series 2, classes A, D, L, T, W and Z). Crimp contacts in the mated condition shall meet the contact resistance requirements specified in SAE-AS39029.

3.6.5.2 Contact resistance (series 2, classes H and N). When tested as specified in 4.6.6, the contact resistance of receptacle shall not exceed that specified in table VIII by more than 700 percent.

TABLE VIII. Contact resistance limits (series 2).

| Contact | Wire size | Maximum voltage drop (mV) |
|---|---|---|
| 20 | 24 | 45 |
| | 22 | 45 |
| | 20 | 55 |
| 16 | 20 | 45 |
| | 18 | 45 |
| | 16 | 50 |
| 12 | 14 | 45 |
| | 12 | 50 |

3.6.6 Insulation resistance (series 1). Insulation resistance versus temperature shall be as shown on figure 1.

3.6.6.1 Insulation resistance at ambient temperature (series 1). When connectors are tested as specified in 4.6.7.1 at 25°C, the insulation resistance shall be greater than 5,000 megohms.

3.6.6.2 Insulation resistance at elevated temperature – short time (series 1). When connectors are tested as specified in 4.6.7.2 at 125°C, the insulation resistance shall be greater than 3 megohms.

3.6.6.3 Insulation resistance at elevated temperature – long time (series 1). When connectors are tested as specified in 4.6.7.3 at 105°C, the insulation resistance shall be greater than 12 megohms.

3.6.7 Insulation resistance (series 2). Insulation resistance versus temperature shall be as shown on figure 3.

3.6.7.1 Insulation resistance at ambient (series 2). The insulation resistance shall be greater than 5,000 megohms when connectors are tested as specified in 4.6.8.1 at 25°C.

3.6.7.2 Insulation resistance (high temperature) (series 2). The insulation resistance shall be greater than 500 megohms when classes A and L are tested as specified in 4.6.8.2 at 200°C, and when classes H, N, W, D, T and Z are tested as specified in 4.6.8.2 at 175°C,.

3.6.8 Dielectric withstanding voltage (series 1). When tested as specified in 4.6.9.1 and 4.6.9.2, connectors shall show no evidence of breakdown or flashover when subjected to the test voltages and altitudes specified.



Source: https://assist.dla.mil -- Downloaded: 2016-11-16T06:09Z
Check the source to verify that this is the current version before use.

3.6.8.1 Working voltages. Maximum working voltages are as shown in table IX.

TABLE IX. Working voltage, ac, rms (series 1 and 2).

| Condition | Service rating I | Service rating II | Service rating shielded |
|---|---|---|---|
| Sea level | 600 | 1,000 | 500 volts, dc |
| 70,000 ft | 300 | 450 | -- |

3.6.9 Dielectric withstanding voltage (series 2).

3.6.9.1 Dielectric withstanding voltage (sea level). When tested as specified in 4.6.10.1, maximum leakage current shall be 2 milliamperes and there shall be no evidence of electric breakdown or flashover. The service rating is on the applicable military standard.

3.6.9.2 Dielectric withstanding voltage (altitude). When tested as specified in 4.6.10.2, maximum leakage current shall be 2 milliamperes and there shall be no evidence of electric breakdown or flashover.

3.6.10 Contact insertion and removal forces (crimp contact connectors) (series 1). The contact insertion forces and the forces required to remove unlocked contacts shall not exceed the values specified in table X when subjected to the maintenance aging test (see 4.6.11).

TABLE X. Contact insertion and removal forces (pounds, maximum) (series 1).

| Contact size | Insertion and removal forces |
|---|---|
| 20 | 20 |
| 16 | 20 |
| 12 | 30 |

3.6.11 Contact insertion and removal forces (series 2) (except class H). When tested as specified in 4.6.11, the insertion force for any individual contact shall not exceed 15 pounds. The removal force shall not exceed 10 pounds.

3.6.12 Thermal shock (temperature cycling) (series 1). When tested as specified in 4.6.12, there shall be no evidence of damage detrimental to the operation of connectors.

3.6.13 Thermal shock (temperature cycling) (series 2). After testing as specified in 4.6.13, connectors shall meet the subsequent test requirements listed in the applicable test sequence table.

3.6.14 Water pressure (series 1) (applicable to solder-type contact connectors, class E receptacles and class J plugs). When tested as specified in 4.6.14, receptacle inserts and panel seals shall show no leakage. In addition, there shall be no evidence of leakage at the connector interface of mated connectors, neither shall there be evidence of water penetration into the J adapters of the mated and unmated plugs; and the insulation resistance of mated connectors at the end of 48 hours, while still immersed, shall be 100 megohms minimum. After removal of unmated connectors from the immersion tank, the insulation resistance shall be 100 megohms minimum.



Source: https://assist.dla.mil -- Downloaded: 2016-11-16T06:09Z
Check the source to verify that this is the current version before use.

3.6.15 Air leakage (series 1).

3.6.15.1 Solder contact receptacles (except class H), through-bulkhead receptacles, class J plugs, stowage receptacles, and protective covers. When tested as specified in 4.6.15, the air leakage rate shall be no greater than 1 atmospheric cubic inch per hour ($4.55 \times 10^{-3}$ $cm^3/s$), including the flange O-ring seal of all jam nut receptacles.

3.6.15.2 Class H connectors. When tested as specified in 4.6.15.2, the air leakage rate shall not exceed 0.1 micron cubic foot per hour ($1 \times 10^{-6}$ $cm^3/s$). The specified leakage rate shall apply only through the connector and not through the flange and mounting surface area, unless solder mounted.

3.6.16 Air leakage (series 2, classes H and N). When receptacles are tested as specified in 4.6.16, the leakage rate shall not exceed 0.1 micron cubic foot per hour ($1 \times 10^{-6}$ $cm^3/s$) when subjected to a differential pressure of $14.7 \pm 0.3$ pounds force per square inch ($lb_f/in^2$), $1.033 \pm .02$ kgs per square centimeter ($kg/cm^2$).

3.6.17 Durability (series 1). When tested as specified in 4.6.17, counterpart connectors shall show no mechanical or electrical defects detrimental to the operation of the connector, after 500 cycles of coupling and uncoupling.

3.6.18 Durability (series 2, except RFI plugs). When tested as specified in 4.6.18, connectors shall meet the subsequent test requirements after 500 cycles of mating and unmating.

3.6.18.1 Durability (series 2) (RFI plugs). When tested as specified in 4.6.18, connectors shall meet the subsequent test requirements after 250 cycles of mating and unmating.

3.6.19 Salt spray (corrosion) (series 1). When tested as specified in 4.6.19, unmated connectors, stowage receptacles, protective covers and accessories shall show no exposure of basic metal, which will adversely affect performance when evaluated in accordance with SAE-AIR4789. The connector shall meet all subsequent test requirements.

3.6.20 Salt spray (corrosion) (series 2). When tested as specified in 4.6.20, there shall be no exposure of the basic metal which will adversely affect performance when evaluated in accordance with SAE-AIR4789. The connector shall meet all subsequent test requirements.

3.6.21 Vibration (series 1). When tested as specified in 4.6.21, mated connectors shall not be damaged and there shall be no loosening of parts. Counterpart connectors shall be retained in full engagement, and there shall be no interruption of electrical continuity longer than 10 microseconds.

3.6.22 Random vibration (series 2). When tested as specified in 4.6.22, mated connectors shall not be damaged and there shall be no loosening of parts. The coupling ring shall not loosen and there shall be no interruption of electrical continuity longer than 1 microsecond.

3.6.23 Shock (specified pulse) (series 1). When tested as specified in 4.6.23, mated connectors shall not be damaged and there shall be no interruption of electrical continuity longer than 10 microseconds.

3.6.24 Shock (specified pulse) (series 2). When tested as specified in 4.6.24, mated connectors shall not be damaged and there shall be no interruption of electrical continuity longer than 1 microsecond.



Source: https://assist.dla.mil -- Downloaded: 2016-11-16T06:09Z
Check the source to verify that this is the current version before use.

3.6.25 Humidity (series 1). When tested as specified in 4.6.25, mated connectors shall maintain an insulation resistance of 100 megohms or greater at 25°C.

3.6.26 Humidity (series 2). When tested as specified in 4.6.26, insulation resistance shall be at least 100 megohms. The connector shall meet the subsequent tests listed in the applicable test sequence table.

3.6.27 Fluid immersion (series 1). When tested as specified in 4.6.27, connectors shall mate within the forces specified in table V.

3.6.28 Fluid immersion (series 2).

3.6.28.1 Classes D, H, L, N, T, W and Z. After being tested as specified in 4.6.28.1, connectors shall mate properly and shall meet the requirements of all subsequent tests.

3.6.28.2 Retention system fluid immersion (series 2). When tested as specified in 4.6.28.2, connectors shall meet the requirements of subsequent tests as specified herein. (Effects of fluids on resilient sealing members shall not be a consideration of this test.)

3.6.29 Insert retention (series 1) (except class H). When tested as specified in 4.6.29, inserts shall not be dislocated from their original positions. The effective pressure differential shall be 75 $lb_f/in^2$ (5.3 $kg/cm^2$).

3.6.29.1 Insert retention (series 1) (class H). When tested as specified in 4.6.29, class H inserts shall not be disclosed from the original positions. The effective pressure differential shall be 200 $lb_f/in^2$ (14.06 $kg/cm^2$).

3.6.30 Insert retention (series 2, except classes H and N). When connectors are tested as specified in 4.6.30, inserts shall withstand an applied minimum pressure of 150 $lb_f/in^2$ (10.54 $kg/cm^2$).

3.6.30.1 Insert retention (series 2, classes H and N). When tested as specified in 4.6.30.1, receptacles shall support a minimum differential pressure in either direction of 100 $lb_f/in^2$ (7.03 $kg/cm^2$) for shell sizes 8 through 24 static loading for a minimum of 5 minutes. The receptacle shall meet the subsequent test requirements of the applicable test sequence table.

3.6.31 Gage location and retention (crimp type contacts). The axial location of series 1 pin contacts and series 2 pin and socket contacts shall be measured as specified in 4.6.31 using test gages in accordance with MS3460, MS3461, or MS3462, as applicable. Gage location measurements shall fall within the range specified on figure 5. Test gages in accordance with MS3460, MS3461, or MS3462, as applicable, shall be retained in the pin and socket cavities of series 1 and series 2 crimp contact connectors, and in the rear termination cavities of class N connectors, with the axial loads specified in table XI applied. The axial displacement of the test gages while under load shall not exceed 0.015 inch (0.38 mm).

3.6.32 Contact retention. When tested as specified in 4.6.32, contacts shall be retained in their inserts at the axial loads specified in table XI. The axial displacement of crimp contacts with respect to the shell shall not exceed .012 inch (0.30 mm) while under load with the accessory tightened or .015 inches (0.38 mm) while under load with the accessory removed. The axial displacement of solder contacts with respect to the shell shall not exceed .012 inch (0.30 mm) within one minute after the load has been removed.



Source: https://assist.dla.mil -- Downloaded: 2016-11-16T06:09Z
Check the source to verify that this is the current version before use.

TABLE XI. Axial loads for contact retention.

| Contact size | Axial load (pounds-minimum) | |
|---|---|---|
| | Series 1 | Series 2 |
| 20 | 15 | 20 |
| 16 | 25 | 25 |
| 12 | 25 | 30 |
| 8 | 40 | 40 |

3.6.33 Contact engaging and separating forces (series 1). When tested as specified in 4.6.33, socket contacts shall comply with the engagement and separation forces in table XII.

3.6.34 Probe damage (series 1). When tested as specified in 4.6.34, socket contacts shall meet the requirements of 3.6.33.

3.6.35 Cover chain, tensile strength (series 1). When tested as specified in 4.6.35, protective covers with chains shall withstand a 25-pound (11.34 kg) tensile test without damage.

3.6.36 Altitude immersion (series 2). When connectors are tested as specified in 4.6.36, the insulation resistance shall not be less than 1,000 megohms and the connector shall show no evidence of breakdown, flashover or corona when subjected to a minimum of 1,500 volts root mean square (rms). Maximum leakage current during the dielectric withstanding voltage test shall be 2 milliamperes.

3.6.37 Temperature life (series 2, class H). Following the test as specified in 4.6.37, the contact resistance shall meet the requirements of 3.6.5.2.

3.6.37.1 Temperature life with contact loading (series 2, classes D, N, T, W and Z). When tested as specified in 4.6.37.1, the contacts shall maintain their specified locations as shown on figure 13 and there shall be no electrical discontinuity in excess of 1 microsecond.

3.6.38 Ozone exposure (series 2). When connectors are tested as specified in 4.6.38, there shall be no evidence of cracking of materials or other damage that will adversely affect the subsequent performance of the connectors in the applicable test sequence.

TABLE XII. Contact engaging and separating forces (series 1).

| Mating end size | Initial | | |
|---|---|---|---|
| | Minimum separation force (ounces) | Maximum average engagement force (ounces) | Maximum engagement force (ounces) |
| | Minimum diameter SAE-AS31971 pin | Maximum diameter SAE-AS31971 pin | Maximum diameter SAE-AS31971 pin |
| 12 | 3 | 24 | 30 |
| 16 | 2 | 24 | 30 |
| 20 | 0.7 | 12 | 18 |



Source: https://assist.dla.mil -- Downloaded: 2016-11-16T06:09Z
Check the source to verify that this is the current version before use.

TABLE XII. Contact engaging and separating forces (series 1) - Continued.

| Mating end size | After conditioning | | |
|---|---|---|---|
| | Minimum separation force (ounces) | Maximum average engagement force (ounces) | Maximum engagement force (ounces) |
| | Minimum diameter SAE-AS31971 pin | Maximum diameter SAE-AS31971 pin | Maximum diameter SAE-AS31971 pin |
| 12 | 2.5 | 29 | 36 |
| 16 | 1.5 | 29 | 36 |
| 20 | 0.6 | 14 | 22 |

3.6.39 Shell-to-shell conductivity (series 2, except class A). When tested as specified in 4.6.39, the probes shall not puncture or otherwise damage the connector finish and the maximum measured potential drop across assemblies shall be as follows:

a. With spring fingers: 5 millivolts.
b. Without spring fingers: 200 millivolts.

3.6.40 Insert grommet bonding (series 2, all classes, except hermetics). Specimens of the insert grommet bonded assembly and the insert interfacial seal bonded assembly shall be subjected to the test specified in 4.6.40. There shall be evidence of cohesive failure of the insert face seal, grommet or insert material rather than complete adhesive failure of bond. The test shall be conducted using only the complete insert assemblies in their final form prior to assembly into the connector shell.

3.6.41 External bending moment (series 2, all classes, except hermetics). When tested as specified in 4.6.41 using the applicable bending moment shown in table XIII, connectors shall show no evidence of damage detrimental to their normal operation, nor shall there be any interruption of electrical continuity.

TABLE XIII. External bending moment (series 2).

| Shell size | Bending moment, inch-pounds (N-m) 2 inch lever |
|---|---|
| 8 | 55 (6.2 N-m) |
| 10 | 61 (6.9 N-m) |
| 12 | 115 (13.0 N-m) |
| 14 | 134 (15.14 N-m) |
| 16 | 154 (17.40 N-m) |
| 18 | 199 (22.48 N-m) |
| 20 | 245 (27.68 N-m) |
| 22 | 270 (30.50 N-m) |
| 24 | 328 (37.04 N-m) |



Source: https://assist.dla.mil -- Downloaded: 2016-11-16T06:09Z
Check the source to verify that this is the current version before use.

3.6.42 Pin contact stability (series 2, all classes, except hermetics). When tested as specified in 4.6.42, the total displacement of the contact tip end shall not exceed the amount shown in table XIV.

TABLE XIV. Contact stability (series 2).

| Contact size | Total displacement in inches (mm) 1/ 2/ |
|---|---|
| 20 | .038 (0.96) |
| 16 | .052 (1.32) |
| 12 | .062 (1.57) |

1/ Dimensions are in inches.
2/ Metric equivalents are given for information only.

3.6.43 RFI shielding (series 2, RFI plugs only, except class A). When tested as specified in 4.6.43, the RFI shielding capabilities of the shells shall not be less than that specified in table XV at the specified frequencies.

TABLE XV. RFI shielding effectiveness.

| Frequency MHz | Leakage attenuation dB |
|---|---|
| 100 | 65 |
| 150 | 60 |
| 200 | 60 |
| 300 | 55 |
| 400 | 55 |
| 600 | 50 |
| 800 | 45 |
| 1,000 | 45 |

3.6.44 RFI finger spring force (series 2, except class A). When tested as specified in 4.6.44, the plug and receptacle axial mating force shall be as specified in table XVI.

TABLE XVI. RFI finger spring force (series 2, class L).

| Shell size | Axial force | |
|---|---|---|
| | Maximum lbs | Minimum lbs |
| 8 and 10 | 15 (6.8 kg) | 2 (.907 kg) |
| 12 and 14 | 20 (9.07 kg) | |
| 16 thru 24 | 30 (13.60 kg) | |

3.6.45 Insertion and removal tool abuse (series 2, all classes, except hermetics). When tested as specified in 4.6.45, there shall be no damage to the contacts, the connector insert, or the contact retaining mechanism. The connectors shall meet the requirements of subsequent testing.

3.6.46 Contact walk-out (series 2, classes D, L, N, T, W and Z). When tested as specified in 4.6.46, contacts shall not become dislodged from their normal position.



Source: https://assist.dla.mil -- Downloaded: 2016-11-16T06:09Z
Check the source to verify that this is the current version before use.

3.6.47 Accessory thread strength (series 2, all classes, except hermetics). When tested as specified in 4.6.47, the accessory threads and portion of the connector that accepts connector accessories shall be capable of withstanding torques as specified in table XXVIII.

3.6.48 Impact (drop) (qualification only) (series 2 only). When connectors are tested as specified in 4.6.50, there shall be no breaking or cracking of inserts, bending of pins, nor any other damage which prevents the connectors from being mated or renders them unfit to continue further testing. Any chipping of the inserts which affects its polarization or retention in the shell shall be considered a failure.

3.6.49 Solder contact plating thickness (except class H) (series 1). When measured as specified in 4.6.51, the plating thickness, except for corners, shall be as specified in 3.3.5. All other plated surfaces shall be plated to a thickness to assure specified performance of the contact.

3.6.50 Humidity-temperature cycling (series 1, solder contact with localized finish only) (except class H). When tested as specified in 4.6.52, there shall be no evidence of defects detrimental to the electrical performance.

3.7 Marking.

3.7.1 Connector marking (series 1 and series 2). Connectors and accessories shall be permanently marked on the shell or coupling ring with the PIN, date code, manufacturer and assembly plant when applicable (see 1.2.1 and 3.1). The manufacturer and assembly plants may be identified by the use of Commercial or Government Entity Number (CAGE code), name, trademark or symbol and shall be as specified in SAE-AIR1351. Stamping shall be in accordance with MIL-STD-1285 where space permits, in the location specified (see 3.1). Marking shall remain legible following completion of all inspections. Marking shall be nonfading. The characters shall be a minimum of .037 inch (0.94 mm) in height. The minimum character height does not apply to shell sizes 8, 10, and 12. In addition, all connectors shall be marked around the periphery of the shell with a blue color band to identify the connectors as having the rear release contact system. The location of the blue band shall be as specified (see 3.1). A single digit shell size and/or insert arrangement shall be marked with a single digit (example: shell size 8 shall be marked “8” not “08”), however, to allow existing stock to be exhausted, the use of 2 digits is allowed (example: shell size “8” maybe marked “08”) for a period of one year from the date of this specification.

3.7.2 Insert marking. Inserts shall be marked in accordance with MIL-STD-1669. Raised or depressed characters shall not be used on mating faces.

3.7.2.1 Contact designation. Contact locations shall be designated by identifiable characters of contrasting color on the front and rear faces of the insert or insert assembly. Positioning and arrangement of the characters shall be such that the appropriate contact cavity is readily identifiable. On the rear face of solder contact inserts, those individual contact designations may be omitted where space limitations render identifiability marginal. Eighty percent of the characters on any face of the connectors shall remain identifiable after completion of the tests specified in the qualification tables.

3.7.3 Grommet marking. Wire openings on the rear face of grommets shall be marked with legible characters corresponding to the insert contact designators. On grommets of solder contact connectors, it is permissible to identify, where space limitations dictate, only those wire openings which are located on the vertical centerline.

3.7.4 JAN brand. The United States Government has adopted and is exercising legitimate control over the certification marks "JAN" and "J", respectively, to indicate that items so marked or identified are manufactured to, and meet all the requirements of specifications. Accordingly, items acquired to, and meeting all of the criteria specified herein and in applicable specifications shall bear the certification mark



Source: https://assist.dla.mil -- Downloaded: 2016-11-16T06:09Z
Check the source to verify that this is the current version before use.

"JAN" except that items too small to bear the certification mark "JAN" shall bear the letter "J". The "JAN" or "J" shall be placed immediately before the part number except that if such location would place a hardship on the manufacturer in connection with such marking, the "JAN" or "J" may be located on the first line above or below the part number. Items furnished under contracts or orders which either permit or require deviation from the conditions or requirements specified herein or in applicable specifications shall not bear "JAN" or "J". In the event an item fails to meet the conditions or requirements of this specification or in applicable specification sheets, the manufacturer shall remove completely military part number and the "JAN" or the "J" from the sample tested and also from all items represented by the sample. The "JAN" or "J" certification mark shall not be used on products acquired to contractor drawings or specifications. The United States Government has obtained Certificate of Registration Number 504,860 for the certification mark "JAN" and Registration Number 1,586,261 for the certification mark “J”.

Note: The “JAN” or “J” is not part of the PIN but indicates a certification.

3.8 Workmanship. Connectors and accessories shall meet all design dimensions and intermateability requirements of this specification. Loose contacts, poor molding fabrication, loose materials, defective bonding, damaged or improperly assembled contact, peeling, or chipping of plating or finish, galling of mating parts and post molding warpage will be considered adequate basis for rejection of items of quality inferior for the purpose intended. The connector shall be fabricated in a manner such that the criteria for appearance, fit and adherence to specified tolerances are observed. Particular attention shall be given to neatness and thoroughness of marking parts, plating, welding, soldering, riveting, staking, and bonding. The visual examination under three power (3X) magnification shall include examination of each retention cavity for molding discrepancies, retention features, and excessive adhesive. The connectors shall be free from crazing, cracks, voids, pimples, chips, blisters, pinholes, sharp cutting edges, nicks, burrs, and other defects that will adversely affect life, serviceability, or appearance.

3.9 Change effectivity. Unless otherwise specified by the preparing activity and/or the qualifying activity, all changes from the previous revision of MIL-DTL-26482 shall become effective within 90 days from the date of publication of the latest revision. If unable to implement changes within the 90 day time period, additional time shall be requested from the qualifying activity. Manufacturers that are QPL listed and have concerns regarding possible changes to retention reporting requirements should contact the qualifying activity for clarification.

3.10 Disposition of stock. Unless otherwise specified by the preparing activity and/or the qualifying activity, qualified manufacturers and their selling agents or distributors may ship from stock; connectors and accessories which were manufactured in accordance with the previous revision of MIL-DTL-26482 for a period of 18 months from the date of the latest revision, provided that form, fit and function requirements are not affected.

3.11 Pure tin. The use of pure tin, as an underplate or final finish, is prohibited both internally and externally. Tin content of connectors, their components and solder shall not exceed 97 percent, by mass. Tin shall be alloyed with a minimum of 3 percent lead, by mass (see 6.12).

## 4. VERIFICATION

4.1 Classification of inspection. The inspection requirements specified herein are classified as follows:

a. Qualification inspection (see 4.3).
b. Conformance inspection (see 4.4).

4.1.1 Inspection of product for delivery. Inspection of product for delivery shall consist of Groups A and B inspection.



Source: https://assist.dla.mil -- Downloaded: 2016-11-16T06:09Z
Check the source to verify that this is the current version before use.

4.1.2 Inspection conditions. Unless otherwise specified, tests and examinations required by this specification shall be performed under any combination of conditions within the following ranges. Any specified condition shall not affect the other two ambient ranges.

Temperature: 15° to 35°C (59° to 95°F).
Relative humidity: 30 to 80 percent.
Barometric pressure: 650 to 800 mm of mercury

4.1.2.1 Test equipment and inspection facilities. Test and measuring equipment and inspection facilities of sufficient accuracy, quality and quantity to permit performance of the required inspection shall be established and maintained by the supplier. The establishment and maintenance of a calibration system to control the accuracy of the measuring and test equipment shall be in accordance with NCSL Z540.1.

4.1.2.2 Established reliability assurance program. A reliability assurance program shall be established and maintained in accordance with MIL-STD-790. Evidence of such compliance shall be verified by the qualifying activity of this specification as a prerequisite for qualification and continued qualification.

4.1.2.3 Statistical process control (SPC). A SPC program shall be established and maintained in accordance with EIA-557. Evidence of such compliance shall be verified by the qualifying activity as a prerequisite for qualification and retention of qualification.

4.1.3 Assembly plants. Assembly plants must be listed on or approved for listing on the applicable Qualified Products List. The qualified connector manufacturer shall certify that the assembly plant is approved for the distribution of the manufacturer's parts. The assembly plant shall use only piece parts supplied by the qualified connector manufacturer. No testing other than visual examination is required of certified piece parts obtained from the qualified connector manufacturer, except when there is cause for rejection. Assemblies produced at the assembly plant shall be subjected to inspection to assure that the assembly process conforms with that established at the qualified manufacturing plant. Quality control requirements, including Government inspection surveillance, shall be the same as required for the qualified connector manufacturer.

4.2 Fungus resistance certification. Certification to method 508.6 of MIL-STD-810 is required (see 3.3.1).

4.3 Qualification inspection. Qualification inspection shall be performed at a laboratory acceptable to the qualifying activity (see 6.5) on sample units produced with equipment and procedures normally used in production. After receipt of the letter of authorization from the activity responsible for qualification, the applicant shall submit to the qualifying activity three copies of his test reports (certified by the Government inspector indicating the extent to which the tests were witnessed), together with samples required by the qualifying activity.

4.3.1 Qualification of additional connectors. For connectors of the same series which have identical contacts and finish, and differ only in shell size and/or configuration from those which have been previously qualified (or are currently being qualified), the qualifying activity may grant qualification upon successful completion of inspections and tests as specified in 4.3.2, provided that the manufacturer submits test data necessary to validate the differing feature(s). In addition, connectors which differ only in shell size shall be subjected to the following tests and the results shall be forwarded to the qualifying activity:



Source: https://assist.dla.mil -- Downloaded: 2016-11-16T06:09Z
Check the source to verify that this is the current version before use.

| Test | Requirement paragraph | Test paragraph |
|---|---|---|
| Examination of product | 3.1, 3.3, 3.5, 3.7 and 3.8 | 4.6.1 |
| Operating forces | 3.6.3 | 4.6.4 |
| Final examination of product | 3.7.1 | 4.6.49 |
| External bending moment (series 2, except hermetics) | 3.6.41 | 4.6.41 |

4.3.2 Qualification samples. Samples of each class for which qualification is desired shall be tested in the sequence specified in table XVIII or table XIX, as applicable. Each connector subjected to qualification testing shall be provided with a counterpart connector for those tests requiring mating assemblies. The counterpart connectors provided for this purpose shall be new, previously qualified connectors or new connectors submitted for qualification testing. Manufacturers not producing mating connectors shall submit data substantiating that tests were performed with approved counterpart connectors. Specific details on preparation of samples shall be as follows:

4.3.2.1 Series 1. A sufficient number of connectors shall be supplied to provide a minimum of 110 contact cavities of the size of contacts for which qualification of the crimp contact retention feature is desired.

4.3.2.1.1 Wire-to-contact assembly. Where wired contacts are required, terminations shall be accomplished as applicable (see 4.3.2.1.1.1 and 4.3.2.1.1.2).

4.3.2.1.1.1 Solder contacts. Solder contacts wire terminations shall be tested in accordance with MIL-STD-202, method 208.

4.3.2.1.1.2 Crimp contacts. A class I crimping tool conforming to M22520/I-01 or M22520/2-01 in accordance with MIL-DTL-22520 shall be used as applicable.

4.3.2.1.2 Connector assemblies (classes E, F and P). Three complete connector assemblies, class E wall-mount receptacles and class F straight plugs, with insert arrangements in the densest configuration of each voltage rating for which qualification is desired, in each shell size and each finish, shall be provided. Separate samples are required for crimp-contact connectors and solder-contact connectors. Crimp contacts shall be supplied but shall not be installed in connectors submitted for qualification testing.

a. One sample shall have pin contacts in the plug and socket contacts in the receptacle. Both halves shall be wired with approximately 3 feet (0.91 m) of wire approaching the minimum OD specified in table II. These samples shall be subjected to the tests in table XVIII, group 1.

b. The other samples shall have socket contacts in the plug and pin contacts in the receptacle. Both halves shall be wired with approximately 3 feet of wire approaching the maximum OD specified in table II. These samples shall be divided into two groups and shall be subjected to all the tests in table XVIII, groups 2 and 3. One group of connectors is to be assigned to each test sequence.

c. Qualification of these samples shall admit qualification of other types and the balance of insert patterns in classes E, F and P by similarity. If qualification of class E or F is not sought, samples of class P shall be substituted for class E or F in the foregoing, except that nominal gage wire may be used.



Source: https://assist.dla.mil -- Downloaded: 2016-11-16T06:09Z
Check the source to verify that this is the current version before use.

4.3.2.1.3 Connector assemblies (class H). Three class H receptacles, with insert arrangements in the densest configuration of each voltage rating for which qualification is desired, in each shell size and contact style shall be provided, together with counterpart class E straight plugs.

a. All halves shall be wired with approximately 3 feet of wire of nominal gage.

b. The samples shall be divided into three equal groups and shall be subjected to all the tests in table XVIII, groups 4, 5, and 6, one group of connectors to be assigned to each test sequence. Qualification of these samples will admit qualification of other types and the balance of insert patterns in class H by similarity.

4.3.2.1.4 Connector assemblies (class J). One mated pair of class J connector assemblies, in each shell size, shall be subjected to the tests in table XVIII, group 10.

a. The connectors need not be wired but shall be assembled using a solid polychloroprene cylinder of suitable length and OD in table XVII. The Shore A durometer of the test cylinder shall be from 75 to 85.

b. Qualification of these samples will admit qualification of all class J assemblies if class E are being qualified at the same time or have previously been qualified to this specification. If not, class J assemblies shall be subjected to all of the tests in table XVIII, test groups 1 and 2.

TABLE XVII. Test cylinder OD sizes.

| Shell size | Diameter ± .016 inch (± 0.41 mm) |
|---|---|
| 8 | .214 (5.43) |
| 10 | .250 (6.35) |
| 12 | .384 (9.75) |
| 14 | .462 (11.73) |
| 16 | .596 (15.14) |
| 18 | .646 (16.1) |
| 20 | .681 (17.30) |
| 22 | .716 (18.20) |
| 24 | .817 (20.75) |

4.3.2.1.5 Solder contacts (series 1). A sufficient number of series 1 solder contact connectors and contacts shall be provided as follows:

a. Fifty of each socket contact configuration shall be subjected to the tests in table XVIII, group 7. Sockets which are not completely assembled prior to installation in the insert (e.g. class H, socket style), may be provided and tested in connectors.

b. Two pin contacts and two socket contacts, uninstalled but representative of each contact configuration supplied assembled in the insert, shall be provided for inspection of contact finish in accordance with 3.3.5 and 4.6.51 (table XVIII, group 12).



Source: https://assist.dla.mil -- Downloaded: 2016-11-16T06:09Z
Check the source to verify that this is the current version before use.

c. Eight pin contacts and eight socket contacts (localized finish only) (see 3.3.5.1.2) of each configuration, installed into inserts, shall be provided. Samples shall be wired as required and subjected to the tests in table XVIII, group 11.

4.3.2.1.6 Protective covers. Two protective covers of each shell size with mating class E connectors, shall be subjected to the tests in table XVIII, group 8.

4.3.2.1.7 Stowage receptacles. Two stowage receptacles of each size, with mating class E connectors, shall be subjected to the tests in table XVIII, group 8.

4.3.2.1.8 Crimp connectors. Connectors supplied in accordance with 4.3.2.1 shall be subjected to the tests specified in table XVIII, group 9.

4.3.2.2 Series 2.

4.3.2.2.1 Connector assemblies (classes A, D, L, T, W and Z ). Eight complete connector assemblies shall be provided for test groups 1 through 6 and group 8 in table XIX. Samples for group 7 shall be as specified in 4.3.2.2.4, and samples for group 9 shall be as specified in 4.3.2.2.1.1. Connectors shall be wired with approximately three feet of wire and provided with suitable backshells. A class I crimping tool conforming to M22520/1-01 or M22520/2-01 shall be used for termination of the wire to the crimp contacts. One RFI plug of each size together with a suitable counterpart receptacle (one with inserts and bayonet pins and one without) shall be provided for test groups 6 and 8 in table XIX. Group 10, consisting of 12 mated connector assemblies to go thru fluid immersion (1 assembly per fluid). The full complement of contacts shall be installed but need not be wired. Individual sample assemblies shall be as follows:

| Test group | Wire diameter (approaching) | Plug contacts | Receptacle contacts | Backshells (plugs and receptacles) |
|---|---|---|---|---|
| 1 | minimum | socket | pin | 90° |
| 2 | maximum | socket | pin | 90° |
| 3 | minimum | pin | socket | straight with strain relief |
| 4 | maximum | socket | pin | 90° |
| 5 | minimum | pin | socket | straight |
| 6 | maximum | pin | socket | straight |
| 7 | none | none | none | none |
| 8 | as specified | as specified | as specified | none |
| 9 | nominal | socket | pin | none |
| 10 | as specified | as specified | as specified | none |

4.3.2.2.1.1 Intermateability samples (classes A, D, L, T, W and Z). One complete series 2 connector assembly shall be provided along with a complete counterpart series 1 connector assembly for test group 9 in table XIX. The series 2 plug shall be mated with the series 1 receptacle and the series 1 plug with the series 2 receptacle. The samples shall have socket contacts in the plugs and pin contacts in the receptacles, and shall be fully wired with applicable nominal diameter wire (approximate).



Source: https://assist.dla.mil -- Downloaded: 2016-11-16T06:09Z
Check the source to verify that this is the current version before use.

4.3.2.2.2 Hermetic receptacles (classes H and N) (Initial qualification only). Forty two hermetic receptacles together with suitable counterpart mating plugs shall be provided for test groups 1 through 7 in table XX as follows: 21 receptacles for class H and 21 receptacles for class N. For each test group in each class, provide 3 receptacles; 1 small, 1 medium and 1 large shall size (that is a total of 42 receptacles and 42 mating plugs). Three additional hermetic receptacles (1 small, 1 medium and 1 large, in either class H or class N or a mix of the two) together with their suitable counterpart series 1 mating plugs shall be provided for test group 9 in table XIX. Twenty four additional connectors (12 from class H and 12 from class N for a ratio of 1 sample per fluid) shall be provided for the fluid immersion test of 4.6.28.1. All samples shall be fully wired with applicable nominal diameter wire (approximate). Termination of wire to class H receptacles shall be accomplished with solder in accordance with J-STD-006. Termination of wire to crimp contacts of class N receptacles shall be accomplished with a class 1 crimping tool conforming to M22520/1-01 or M22520/2-01.

4.3.2.2.3 Samples for retention system tests (non-metallic contact retention systems only). Seven complete connector assemblies shall be provided for test groups 1 through 7 in table XXI. (Wire sealing grommets may be removed at the option of the test facility.) Class N samples shall consist of receptacles only. Contacts shall be wired with nominal diameter wire unless otherwise specified in the test paragraph.

4.3.2.2.4 Qualification of insert grommet bonding (class L). Two bonded insert grommet assemblies and two bonded insert interface seal assemblies which have not been assembled into the connector shell shall be tested. The assemblies shall be of the size and contact arrangement for which qualification is to be conducted. These assemblies shall meet the requirements of 3.6.40.

4.3.3 Qualification rejection. There shall be no failures during any examination or tests of the connectors or accessories submitted for qualification tests. After notification of any failure, the activity responsible for qualification testing shall receive details of corrective action from the manufacturer before initiating any further tests deemed necessary to assure compliance with connector requirements.



Source: https://assist.dla.mil -- Downloaded: 2016-11-16T06:09Z
Check the source to verify that this is the current version before use.

TABLE XVIII. Qualification inspection (series 1).

| Examination or test | Requirement paragraph | Test paragraph |
|---|---|---|
| Group 1 – Connector assemblies- (except class H, all finishes) | | |
| Examination of product | 3.1, 3.3 thru 3.5, 3.7, & 3.8 | 4.6.1 |
| Maintenance aging | 3.6.1 | 4.6.2 |
| Contact insertion and removal forces | 3.6.10 | 4.6.11 |
| Contact retention | 3.6.32 | 4.6.32 |
| Mating and unmating forces | 3.6.2 | 4.6.3 |
| Insulation resistance at ambient temperature | 3.6.6.1 | 4.6.7.1 |
| DWV at sea level | 3.6.8 | 4.6.9.1 |
| Thermal shock (temperature cycling) | 3.6.12 | 4.6.12 |
| Air leakage | 3.6.15.1 | 4.6.15.1 |
| Durability | 3.6.17 | 4.6.17 |
| Vibration | 3.6.21 | 4.6.21 |
| Shock (specified pulse) | 3.6.23 | 4.6.23 |
| Humidity | 3.6.25 | 4.6.25 |
| Salt spray (corrosion) | 3.6.19 | 4.6.19 |
| Contact resistance | 3.6.4 | 4.6.5 |
| Mating and unmating forces | 3.6.2 | 4.6.3 |
| Contact retention (crimp contacts) | 3.6.32 | 4.6.32.2 |
| Contact retention (solder contacts) | 3.6.32 | 4.6.32.1 |
| Insert retention | 3.6.29 | 4.6.29 |
| Final examination of product | 3.7.1 | 4.6.49 |
| Group 2 – Connector assemblies- (except class H, all finishes) | | |
| Examination of product | 3.1, 3.3 thru 3.5, 3.7, & 3.8 | 4.6.1 |
| Mating and unmating forces | 3.6.2 | 4.6.3 |
| Insulation resistance at ambient temperature | 3.6.6.1 | 4.6.7.1 |
| DWV at sea level | 3.6.8 | 4.6.9.1 |
| DWV at altitude | 3.6.8 | 4.6.9.2 |
| Contact resistance | 3.6.4 | 4.6.5 |
| Insulation resistance at elevated temperature Short time | 3.6.6.2 | 4.6.7.2 |
| Fluid immersion, lubricating oil | 3.6.27 | 4.6.27 |
| Mating and unmating forces | 3.6.2 | 4.6.3 |
| DWV at sea level | 3.6.8 | 4.6.9.1 |
| Contact retention (crimp contacts) | 3.6.32 | 4.6.32.2 |
| Contact retention (solder contacts) | 3.6.32 | 4.6.32.1 |
| Insert retention | 3.6.29 | 4.6.29 |
| Final examination of product | 3.7.1 | 4.6.49 |



Source: https://assist.dla.mil -- Downloaded: 2016-11-16T06:09Z
Check the source to verify that this is the current version before use.

TABLE XVIII. Qualification inspection (series 1) - Continued.

| Examination or test | Requirement paragraph | Test paragraph |
|---|---|---|
| Group 3– Connector assemblies- (except class H, all finishes) | | |
| Examination of product | 3.1, 3.3 thru 3.5, 3.7, & 3.8 | 4.6.1 |
| Mating and unmating forces | 3.6.2 | 4.6.3 |
| Insulation resistance at ambient temperature | 3.6.6.1 | 4.6.7.1 |
| DWV at sea level | 3.6.8 | 4.6.9.1 |
| DWV at altitude | 3.6.8 | 4.6.9.2 |
| Contact resistance | 3.6.15.2 | 4.6.15.2 |
| Insulation resistance at elevated temperature Long time | 3.6.6.3 | 4.6.7.3 |
| Fluid immersion, hydraulic fluid | 3.6.27 | 4.6.27 |
| Mating and unmating forces | 3.6.2 | 4.6.3 |
| DWV at sea level | 3.6.8 | 4.6.9.1 |
| Contact retention (crimp contacts) | 3.6.32 | 4.6.32.2 |
| Contact retention (solder contacts) | 3.6.32 | 4.6.32.1 |
| Insert retention | 3.6.29 | 4.6.29 |
| Final examination of product | 3.7.1 | 4.6.49 |
| Group 4– Connector assemblies-(class H only) | | |
| Examination of product | 3.1, 3.3 thru 3.5, 3.7, & 3.8 | 4.6.1 |
| Mating and unmating forces | 3.6.2 | 4.6.3 |
| Insulation resistance at ambient temperature | 3.6.6.1 | 4.6.7.1 |
| DWV at sea level | 3.6.8 | 4.6.9.1 |
| DWV at altitude | 3.6.8 | 4.6.9.2 |
| Thermal shock (temperature cycling) | 3.6.12 | 4.6.12 |
| Air leakage (hermetic) | 3.6.15.2 | 4.6.15.2 |
| Durability | 3.6.17 | 4.6.17 |
| Vibration | 3.6.21 | 4.6.21 |
| Shock (specified pulse) | 3.6.23 | 4.6.23 |
| Humidity | 3.6.25 | 4.6.25 |
| Salt spray (corrosion) | 3.6.19 | 4.6.19 |
| Contact resistance | 3.6.4 | 4.6.5 |
| Mating and unmating forces | 3.6.2 | 4.6.3 |
| Insert retention (hermetic) | 3.6.29.1 | 4.6.29 |
| Final examination of product | 3.7.1 | 4.6.49 |



Source: https://assist.dla.mil -- Downloaded: 2016-11-16T06:09Z
Check the source to verify that this is the current version before use.

TABLE XVIII. Qualification inspection (series 1) - Continued.

| Examination or test | Requirement paragraph | Test paragraph |
|---|---|---|
| Group 5- (class H only) | | |
| Examination of product | 3.1, 3.3 thru 3.5, 3.7, & 3.8 | 4.6.1 |
| Mating and unmating forces | 3.6.2 | 4.6.3 |
| Insulation resistance at ambient temperature | 3.6.6.1 | 4.6.7.1 |
| DWV at sea level | 3.6.8 | 4.6.9.1 |
| DWV at altitude | 3.6.8 | 4.6.9.2 |
| Contact resistance | 3.6.4 | 4.6.5 |
| Fluid immersion, lubricating oil | 3.6.27 | 4.6.27 |
| Mating and unmating forces | 3.6.2 | 4.6.3 |
| DWV at sea level | 3.6.8 | 4.6.9.1 |
| Contact retention (crimp contacts) | 3.6.32 | 4.6.32.2 |
| Insert retention (hermetic) | 3.6.29.1 | 4.6.29 |
| Final examination of product | 3.7.1 | 4.6.49 |
| Group 6- (class H only) | | |
| Examination of product | 3.1, 3.3 thru 3.5, 3.7, & 3.8 | 4.6.1 |
| Mating and unmating forces | 3.6.2 | 4.6.3 |
| Insulation resistance at ambient temperature | 3.6.6.1 | 4.6.7.1 |
| DWV at sea level | 3.6.8 | 4.6.9.1 |
| DWV at altitude | 3.6.8 | 4.6.9.2 |
| Contact resistance | 3.6.4 | 4.6.5 |
| Fluid immersion, hydraulic fluid | 3.6.27 | 4.6.27 |
| Mating and unmating forces | 3.6.2 | 4.6.3 |
| DWV at sea level | 3.6.8 | 4.6.9.1 |
| Insert retention (hermetic) | 3.6.29.1 | 4.6.29 |
| Final examination of product | 3.7.1 | 4.6.49 |



Source: https://assist.dla.mil -- Downloaded: 2016-11-16T06:09Z
Check the source to verify that this is the current version before use.

TABLE XVIII. Qualification inspection (series 1) - Continued.

| Examination or test | Requirement paragraph | Test paragraph |
|---|---|---|
| Group 7 – Solder contacts | | |
| Examination of product | 3.1, 3.3 thru 3.5, 3.7, & 3.8 | 4.6.1 |
| Contact engaging and separating forces | 3.6.33 | 4.6.33 |
| Probe damage | 3.6.34 | 4.6.34 |
| Contact engaging and separating forces | 3.6.33 | 4.6.33 |
| Group 8 – Protective covers and stowage receptacles | | |
| Examination of product | 3.1, 3.3 thru 3.5, 3.7, & 3.8 | 4.6.1 |
| Mating and unmating forces | 3.6.2 | 4.6.3 |
| Humidity | 3.6.25 | 4.6.25 |
| Salt spray (corrosion) | 3.6.19 | 4.6.19 |
| Cover chains, tensile strength | 3.6.35 | 4.6.35 |
| Air leakage | 3.6.15.1 | 4.6.15.1 |
| Group 9 – Crimp contact retention feature | | |
| Examination of product | 3.1, 3.3 thru 3.5, 3.7, & 3.8 | 4.6.1 |
| Gage location and retention | 3.6.31 | 4.6.31 |
| Maintenance aging (contacts only) | 3.6.1 | 4.6.2 |
| Gage location and retention | 3.6.31 | 4.6.31 |
| Group 10 – Connector assemblies – class J | | |
| Examination of product | 3.1, 3.3 thru 3.5, 3.7, & 3.8 | 4.6.1 |
| Thermal shock (temperature cycling) | 3.6.12 | 4.6.12 |
| Water pressure | 3.6.14 | 4.6.14 |
| Air leakage | 3.6.15.1 | 4.6.15.1 |
| Group 11 – Localized finish solder contacts only | | |
| Examination of product | 3.1, 3.3 thru 3.5, 3.7, & 3.8 | 4.6.1 |
| Contact resistance (25°C) | 3.6.4 | 4.6.5 |
| Humidity – temperature cycling | 3.6.50 | 4.6.52 |
| Contact resistance (25°C) | 3.6.4 | 4.6.5 |
| Group 12 – Contact finish | | |
| Contact finish | 3.3.5 | 4.6.53 |



Source: https://assist.dla.mil -- Downloaded: 2016-11-16T06:09Z
Check the source to verify that this is the current version before use.

TABLE XIX. Qualification inspection (series 2).

| Examination or test | Requirement paragraph | Test paragraph |
|---|---|---|
| Group 1 (except hermetics) | | |
| Examination of product | 3.1, 3.3 thru 3.5, 3.7, & 3.8 | 4.6.1 |
| Magnetic permeability | 3.3.3 | 4.6.48 |
| Maintenance aging | 3.6.1 | 4.6.2 |
| Contact insertion and removal force | 3.6.11 | 4.6.11 |
| Gage location and retention | 3.6.31 | 4.6.42 |
| RFI finger spring force | 3.6.43 | 4.6.44 |
| Mating and unmating forces 1/ | 3.6.3 | 4.6.4 |
| DWV at sea level | 3.6.9.1 | 4.6.10.1 |
| Insulation resistance at ambient | 3.6.7.1 | 4.6.8.1 |
| Shell-to-shell conductivity | 3.6.39 | 4.6.39 |
| Thermal shock (temperature cycling) | 3.6.13 | 4.6.13 |
| Vibration | 3.6.22 | 4.6.22 |
| Altitude immersion | 3.6.36 | 4.6.36 |
| Mating and unmating forces 1/ | 3.6.3 | 4.6.4 |
| Contact retention | 3.6.32 | 4.6.32 |
| DWV at altitude | 3.6.9.2 | 4.6.10.2 |
| Shell-to-shell conductivity | 3.6.39 | 4.6.39 |
| Insulation resistance at elevated temperature | 3.6.7.2 | 4.6.8.2 |
| Contact resistance | 3.6.5 | 4.6.6 |
| Accessory thread strength | 3.6.46 | 4.6.47 |
| Final examination of product | 3.7.1 | 3.6.49 |

See footnotes at end of table.



Source: https://assist.dla.mil -- Downloaded: 2016-11-16T06:09Z
Check the source to verify that this is the current version before use.

TABLE XIX. Qualification inspection (series 2) – Continued.

| Examination or test | Requirement paragraph | Test paragraph |
|---|---|---|
| Group 2 (except hermetics) | | |
| Examination of product | 3.1, 3.3 thru 3.5, 3.7, & 3.8 | 4.6.1 |
| Contact insertion and removal force | 3.6.11 | 4.6.11 |
| Gage location and retention | 3.6.31 | 4.6.31 |
| Mating and unmating forces 1/ | 3.6.3 | 4.6.4 |
| DWV at sea level | 3.6.9.1 | 4.6.10.1 |
| Insulation resistance at ambient | 3.6.7.1 | 4.6.8.1 |
| Shell-to-shell conductivity | 3.6.39 | 4.6.39 |
| Thermal shock (temperature cycling) | 3.6.13 | 4.6.13 |
| Physical shock (specified pulse) | 3.6.24 | 4.6.24 |
| Altitude immersion | 3.6.36 | 4.6.36 |
| Mating and unmating forces 1/ | 3.6.3 | 4.6.4 |
| Contact retention (class L) | 3.6.32 | 4.6.32 |
| DWV at altitude | 3.6.9.2 | 4.6.10.2 |
| Shell-to-shell conductivity | 3.6.39 | 4.6.39 |
| Insulation resistance at elevated temperature | 3.6.7.2 | 4.6.8.2 |
| Contact resistance | 3.6.5 | 4.6.6 |
| Final examination of product | 3.7.1 | 3.6.49 |

See footnotes at end of table.



Source: https://assist.dla.mil -- Downloaded: 2016-11-16T06:09Z
Check the source to verify that this is the current version before use.

TABLE XIX. Qualification inspection (series 2) – Continued.

| Examination or test | Requirement paragraph | Test paragraph |
|---|---|---|
| Group 3 (except hermetics) | | |
| Examination of product | 3.1, 3.3 thru 3.5, 3.7, & 3.8 | 4.6.1 |
| Contact insertion and removal force | 3.6.11 | 4.6.11 |
| Gage location and retention | 3.6.31 | 4.6.31 |
| Mating and unmating forces 1/ | 3.6.3 | 4.6.4 |
| DWV at sea level | 3.6.9.1 | 4.6.10.1 |
| Insulation resistance at ambient | 3.6.7.1 | 4.6.8.1 |
| Shell-to-shell conductivity | 3.6.39 | 4.6.39 |
| Thermal shock (temperature cycling) | 3.6.13 | 4.6.13 |
| Temperature life with contact loading | 3.6.37.1 | 4.6.37.1 |
| Humidity | 3.6.26 | 4.6.26 |
| Insert retention | 3.6.30 | 4.6.30 |
| Mating and unmating forces 1/ | 3.6.3 | 4.6.4 |
| Contact retention (class L) | 3.6.32 | 4.6.32 |
| DWV at sea level (class L) | 3.6.9.1 | 4.6.10.1 |
| DWV at altitude | 3.6.9.2 | 4.6.10.2 |
| Shell-to-shell conductivity | 3.6.39 | 4.6.39 |
| Insulation resistance at Elevated temperature | 3.6.7.2 | 4.6.8.2 |
| Contact resistance | 3.6.5 | 4.6.6 |
| Final examination of product | 3.7.1 | 3.6.49 |

See footnotes at end of table.



Source: https://assist.dla.mil -- Downloaded: 2016-11-16T06:09Z
Check the source to verify that this is the current version before use.

TABLE XIX. Qualification inspection (series 2) – Continued.

| Examination or test | Requirement paragraph | Test paragraph |
|---|---|---|
| Group 4 (except hermetics) | | |
| Examination of product | 3.1, 3.3 thru 3.5, 3.7, & 3.8 | 4.6.1 |
| Contact insertion and removal force | 3.6.11 | 4.6.11 |
| Gage location and retention | 3.6.31 | 4.6.31 |
| Mating and unmating forces 1/ | 3.6.3 | 4.6.4 |
| DWV at sea level | 3.6.9.1 | 4.6.10.1 |
| Insulation resistance at ambient | 3.6.7.1 | 4.6.8.1 |
| Shell-to-shell conductivity | 3.6.39 | 4.6.39 |
| Thermal shock (temperature cycling) | 3.6.13 | 4.6.13 |
| Vibration | 3.6.22 | 4.6.22 |
| Physical shock (specified pulse) | 3.6.24 | 4.6.24 |
| Insert retention | 3.6.30 | 4.6.30 |
| Mating and unmating forces 1/ | 3.6.3 | 4.6.4 |
| DWV at altitude | 3.6.9.2 | 4.6.10.2 |
| Shell-to-shell conductivity | 3.6.39 | 4.6.39 |
| Insulation resistance at elevated temperature | 3.6.7.2 | 4.6.8.2 |
| Contact resistance | 3.6.5 | 4.6.6 |
| Final examination of product | 3.7.1 | 3.6.49 |

See footnotes at end of table.



Source: https://assist.dla.mil -- Downloaded: 2016-11-16T06:09Z
Check the source to verify that this is the current version before use.

TABLE XIX. Qualification inspection (series 2) – Continued.

| Examination or test | Requirement paragraph | Test paragraph |
|---|---|---|
| Group 5 (except hermetics) | | |
| Examination of product | 3.1, 3.3 thru 3.5, 3.7, & 3.8 | 4.6.1 |
| Contact insertion and removal force | 3.6.11 | 4.6.11 |
| Gage location and retention | 3.6.31 | 4.6.31 |
| Mating and unmating forces 1/ | 3.6.3 | 4.6.4 |
| DWV at sea level | 3.6.9.1 | 4.6.10.1 |
| Insulation resistance at ambient | 3.6.7.1 | 4.6.8.1 |
| Shell-to-shell conductivity | 3.6.39 | 4.6.39 |
| Thermal shock (temperature cycling) | 3.6.13 | 4.6.13 |
| Humidity | 3.6.26 | 4.6.26 |
| Mating and unmating forces 1/ | 3.6.3 | 4.6.4 |
| DWV at altitude | 3.6.9.2 | 4.6.10.2 |
| Shell-to-shell conductivity | 3.6.39 | 4.6.39 |
| Insulation resistance at elevated temperature | 3.6.7.2 | 4.6.8.2 |
| Contact resistance | 3.6.5 | 4.6.6 |
| Final examination of product | 3.7.1 | 3.6.49 |

See footnotes at end of table.



Source: https://assist.dla.mil -- Downloaded: 2016-11-16T06:09Z
Check the source to verify that this is the current version before use.

TABLE XIX. Qualification inspection (series 2) – Continued.

| Examination or test | Requirement paragraph | Test paragraph |
|---|---|---|
| Group 6 (except hermetics) | | |
| Examination of product | 3.1, 3.3 thru 3.5, 3.7, & 3.8 | 4.6.1 |
| Contact insertion & removal force | 3.6.11 | 4.6.11 |
| Gage location and retention | 3.6.31 | 4.6.31 |
| Mating and unmating forces 1/ | 3.6.3 | 4.6.4 |
| DWV at sea level | 3.6.9.1 | 4.6.10.1 |
| Insulation resistance at ambient | 3.6.7.1 | 4.6.8.1 |
| Shell-to-shell conductivity | 3.6.39 | 4.6.39 |
| Thermal shock (temperature cycling) | 3.6.13 | 4.6.13 |
| Durability (except RFI plugs) 2/ | 3.6.18 | 4.6.18 |
| Durability (RFI plugs) 2/ | 3.6.18.1 | 4.6.18 |
| Vibration | 3.6.30 | 4.6.30 |
| Salt spray (corrosion) 2/ | 3.6.20 | 4.6.20 |
| Salt spray (dynamic test, classes W,P, T and Z) | 3.6.20 | 4.6.20.1 |
| Ozone exposure | 3.6.38 | 4.6.38 |
| Mating and unmating forces 1/ | 3.6.3 | 4.6.4 |
| Contact retention (class L) | 3.6.32 | 4.6.32 |
| DWV at altitude | 3.6.9.2 | 4.6.10.2 |
| Shell-to-shell conductivity | 3.6.39 | 4.6.39 |
| Insulation resistance | 3.6.7.1 | 4.6.8.1 |
| Insulation resistance at elevated temperature | 3.6.7.2 | 4.6.8.2 |
| Contact resistance | 3.6.5 | 4.6.6 |
| Final examination of product | 3.7.1 | 3.6.49 |

See footnotes at end of table.



Source: https://assist.dla.mil -- Downloaded: 2016-11-16T06:09Z
Check the source to verify that this is the current version before use.

TABLE XIX. Qualification inspection (series 2) – Continued.

| Examination or test | Requirement paragraph | Test paragraph |
|---|---|---|
| Group 7- Insert grommet bonding- (all classes, except hermetics) | | |
| Examination of product | 3.1, 3.3 thru 3.5, 3.7, & 3.8 | 4.6.1 |
| Pin contact stability | | |
| Contact retention (class L) | 3.6.41 | 4.6.42 |
| DWV at sea level (class L) | 3.6.32 | 4.6.32 |
| Insert grommet bonding | 3.6.9.1 | 4.6.10.1 |
| External bending moment | 3.6.39 | 4.6.40 |
| Final examination of product | 3.6.40 | 4.6.41 |
| | 3.7.1 | 3.6.49 |
| Group 8 (except hermetics) | | |
| Examination of product | 3.1, 3.3 thru 3.5, 3.7, & 3.8 | 4.6.1 |
| RFI finger spring force | 3.6.43 | 4.6.44 |
| Mating and unmating forces 1/ | 3.6.3 | 4.6.4 |
| Shell-to-shell conductivity | 3.6.39 | 4.6.39 |
| Thermal shock (temperature cycling) | 3.6.13 | 4.6.13 |
| Durability (RFI plugs) | 3.6.18.1 | 4.6.18 |
| Mating and unmating forces 1/ | 3.6.3 | 4.6.4 |
| Shell-to-shell conductivity | 3.6.39 | 4.6.39 |
| RFI shielding (RFI plugs) | 3.6.43 | 4.6.43 |
| Final examination of product | 3.7.1 | 3.6.49 |

See footnotes at end of table.



Source: https://assist.dla.mil -- Downloaded: 2016-11-16T06:09Z
Check the source to verify that this is the current version before use.

TABLE XIX. Qualification inspection (series 2)- Continued.

| Examination or test | Requirement paragraph | Test paragraph |
|---|---|---|
| Group 9 – Intermateability test (series 2 with series 1) (see 3.5.1) | 3.1, 3.3 thru 3.5, 3.7, & 3.8 | |
| Examination of product | | 4.6.1 |
| Mating and unmating forces | 3.6.3 | 4.6.4 |
| Durability | 3.6.18 | 4.6.18 |
| Mating and unmating forces | 3.6.3 | 4.6.4 |
| Vibration | 3.6.22 | 4.6.22 |
| Impact | 3.6.48 | 4.6.50 |
| Shock (specified pulse) | 3.6.23 | 4.6.23 |
| Humidity | 3.6.24 | 4.6.24 |
| DWV at altitude | 3.6.9.2 | 4.6.10.2 |
| Examination of product | 3.1, 3.3 thru 3.5, 3.7, & 3.8 | 4.6.1 |
| Group 10 - (except hermetics) | | |
| Examination of product | 3.1, 3.3 thru 3.5, 3.7, & 3.8 | 4.6.1 |
| Ozone exposure | 3.6.38 | 4.6.38 |
| Insulation resistance at ambient | 3.6.7.1 | 4.6.8.1 |
| DWV at sea level | 3.6.9.1 | 4.6.10.1 |
| Fluid immersion | 3.6.28 | 4.6.28 |
| DWV at sea level | 3.6.9.1 | 4.6.10.1 |
| Mating and unmating forces | 3.6.3 | 4.6.4 |
| Insert retention | 3.6.30 | 4.6.30 |
| Examination of product | 3.1, 3.3 thru 3.5, 3.7, & 3.8 | 4.6.1 |

1/ Conditioning mating and unmating cycles are not required for this test. Conduct torque measurement only.
2/ Except classes D, T, W and Z.



Source: https://assist.dla.mil -- Downloaded: 2016-11-16T06:09Z
Check the source to verify that this is the current version before use.

TABLE XX. Qualification inspection (series 2, classes H and N).

| Examination or test | Requirement paragraph | Test paragraph |
|---|---|---|
| Group 1 | | |
| Examination of product | 3.1, 3.3 thru 3.5, 3.7 & 3.8 | 4.6.1 |
| Contact insertion and removal forces 1/ | 3.6.11 | 4.6.11 |
| Contact retention | 3.6.32 | 4.6.32 |
| Mating and unmating forces | 3.6.3 | 4.6.4 |
| Insulation resistance | 3.6.7.1 | 4.6.8.2 |
| Shell-to-shell conductivity | 3.6.39 | 4.6.39 |
| Thermal shock (temperature cycling) | 3.6.13 | 4.6.13 |
| Durability | 3.6.18 | 4.6.18 |
| Vibration | 3.6.22 | 4.6.22 |
| Fluid immersion 2/ | 3.6.28 | 4.6.28 |
| Altitude immersion | 3.6.36 | 4.6.36 |
| Mating and unmating forces 3/ | 3.6.3 | 4.6.4 |
| Contact retention | 3.6.32 | 4.6.32 |
| DWV at altitude | 3.6.9.2 | 4.6.10.2 |
| Shell-to-shell conductivity | 3.6.39 | 4.6.39 |
| Insulation resistance –high temperature | 3.6.7.2 | 4.6.8.2 |
| Contact resistance | 3.6.5.2 | 4.6.6 |
| Final examination of product | 3.7.1 | 4.6.49 |
| Air leakage | 3.6.16 | 4.6.16 |

See footnotes at end of table.



Source: https://assist.dla.mil -- Downloaded: 2016-11-16T06:09Z
Check the source to verify that this is the current version before use.

TABLE XX. Qualification inspection (series 2, classes H and N) - Continued.

| Examination or test | Requirement paragraph | Test paragraph |
|---|---|---|
| Group 2 | | |
| Examination of product | 3.1, 3.3 thru 3.5, 3.7 & 3.8 | 4.6.1 |
| Contact insertion and removal forces 1/ | 3.6.11 | 4.6.11 |
| Contact retention | 3.6.32 | 4.6.32 |
| Mating and unmating forces | 3.6.3 | 4.6.4 |
| DWV at sea level | 3.6.9.1 | 4.6.10.1 |
| Insulation resistance | 3.6.7.1 | 4.6.8.2 |
| Shell-to-shell conductivity | 3.6.39 | 4.6.39 |
| Thermal shock (temperature cycling) | 3.6.13 | 4.6.13 |
| Durability | 3.6.18 | 4.6.18 |
| Physical shock | 3.6.24 | 4.6.24 |
| Fluid immersion 2/ | 3.6.28 | 4.6.28 |
| Altitude immersion | 3.6.36 | 4.6.36 |
| Mating and unmating forces 3/ | 3.6.3 | 4.6.4 |
| DWV at altitude | 3.6.9.2 | 4.6.10.2 |
| Shell-to-shell conductivity | 3.6.39 | 4.6.39 |
| Insulation resistance –high temperature | 3.6.7.2 | 4.6.8.2 |
| Contact resistance | 3.6.5.2 | 4.6.6 |
| Final examination of product | 3.7.1 | 4.6.49 |
| Air leakage | 3.6.16 | 4.6.16 |

See footnotes at end of table.



Source: https://assist.dla.mil -- Downloaded: 2016-11-16T06:09Z
Check the source to verify that this is the current version before use.

TABLE XX. Qualification inspection (series 2, classes H and N) - Continued.

| Examination or test | Requirement paragraph | Test paragraph |
|---|---|---|
| Group 3 | | |
| Examination of product | 3.1, 3.3 thru 3.5, 3.7 & 3.8 | 4.6.1 |
| Contact insertion and removal forces 1/ | 3.6.11 | 4.6.11 |
| Contact retention | 3.6.32 | 4.6.32 |
| Mating and unmating forces | 3.6.3 | 4.6.4 |
| DWV at sea level | 3.6.9.1 | 4.6.10.1 |
| Insulation resistance | 3.6.7.1 | 4.6.8.2 |
| Shell-to-shell conductivity | 3.6.39 | 4.6.39 |
| Thermal shock (temperature cycling) | 3.6.13 | 4.6.13 |
| Temperature life (class H) | 3.6.37 | 4.6.37 |
| Temperature life with contact loading (class N) | 3.6.37.1 | 4.6.37.1 |
| Humidity | 3.6.26 | 4.6.26 |
| Insert retention | 3.6.30.1 | 4.6.30.1 |
| Fluid immersion 2/ | 3.6.28 | 4.6.28 |
| Mating and unmating forces 3/ | 3.6.3 | 4.6.4 |
| Contact retention | 3.6.32 | 4.6.32 |
| DWV at altitude | 3.6.9.2 | 4.6.10.2 |
| Shell-to-shell conductivity | 3.6.39 | 4.6.39 |
| Insulation resistance –high temperature | 3.6.7.2 | 4.6.8.2 |
| Contact resistance | 3.6.5.2 | 4.6.6 |
| Final examination of product | 3.7.1 | 4.6.49 |
| Air leakage | 3.6.16 | 4.6.16 |

See footnotes at end of table.



Source: https://assist.dla.mil -- Downloaded: 2016-11-16T06:09Z
Check the source to verify that this is the current version before use.

TABLE XX. Qualification inspection (series 2, classes H and N) - Continued.

| Examination or test | Requirement paragraph | Test paragraph |
|---|---|---|
| Group 4 | | |
| Examination of product | 3.1, 3.3 thru 3.5, 3.7 & 3.8 | 4.6.1 |
| Contact insertion and removal forces 1/ | 3.6.11 | 4.6.11 |
| Contact retention | 3.6.32 | 4.6.32 |
| Mating and unmating forces | 3.6.3 | 4.6.4 |
| DWV at sea level | 3.6.9.1 | 4.6.10.1 |
| Insulation resistance | 3.6.7.1 | 4.6.8.2 |
| Shell-to-shell conductivity | 3.6.39 | 4.6.39 |
| Thermal shock (temperature cycling) | 3.6.13 | 4.6.13 |
| Vibration | 3.6.22 | 4.6.22 |
| Physical shock | 3.6.24 | 4.6.24 |
| Insert retention | 3.6.30.1 | 4.6.30.1 |
| Fluid immersion 2/ | 3.6.28 | 4.6.28 |
| Mating and unmating forces 3/ | 3.6.3 | 4.6.4 |
| DWV at altitude | 3.6.9.2 | 4.6.10.2 |
| Shell-to-shell conductivity | 3.6.39 | 4.6.39 |
| Insulation resistance –high temperature | 3.6.7.2 | 4.6.8.2 |
| Contact resistance | 3.6.5.2 | 4.6.6 |
| Final examination of product | 3.7.1 | 4.6.49 |
| Air leakage | 3.6.16 | 4.6.16 |

See footnotes at end of table.



Source: https://assist.dla.mil -- Downloaded: 2016-11-16T06:09Z
Check the source to verify that this is the current version before use.

TABLE XX. Qualification inspection (series 2, classes H and N) - Continued.

| Examination or test | Requirement paragraph | Test paragraph |
|---|---|---|
| Group 5 | | |
| Examination of product | 3.1, 3.3 thru 3.5, 3.7 & 3.8 | 4.6.1 |
| Contact insertion and removal forces 1/ | 3.6.11 | 4.6.11 |
| Contact retention | 3.6.32 | 4.6.32 |
| Mating and unmating forces | 3.6.3 | 4.6.4 |
| DWV at sea level | 3.6.9.1 | 4.6.10.1 |
| Insulation resistance | 3.6.7.1 | 4.6.8.2 |
| Shell-to-shell conductivity | 3.6.39 | 4.6.39 |
| Thermal shock (temperature cycling) | 3.6.13 | 4.6.13 |
| Durability | 3.6.18 | 4.6.18 |
| Humidity | 3.6.26 | 4.6.26 |
| Fluid immersion 2/ | 3.6.28 | 4.6.28 |
| Mating and unmating forces 3/ | 3.6.3 | 4.6.4 |
| DWV at altitude | 3.6.9.2 | 4.6.10.2 |
| Insulation resistance –high temperature | 3.6.7.2 | 4.6.8.2 |
| Contact resistance | 3.6.5.2 | 4.6.6 |
| Final examination of product | 3.7.1 | 4.6.49 |
| Air leakage | 3.6.16 | 4.6.16 |

See footnotes at end of table.



Source: https://assist.dla.mil -- Downloaded: 2016-11-16T06:09Z
Check the source to verify that this is the current version before use.

TABLE XX. Qualification inspection (series 2, classes H and N) - Continued.

| Examination or test | Requirement paragraph | Test paragraph |
|---|---|---|
| Group 6 | | |
| Examination of product | 3.1, 3.3 thru 3.5, 3.7 & 3.8 | 4.6.1 |
| Contact insertion and removal forces 1/ | 3.6.11 | 4.6.11 |
| Contact retention | 3.6.32 | 4.6.32 |
| Mating and unmating forces | 3.6.3 | 4.6.4 |
| DWV at sea level | 3.6.9.1 | 4.6.10.1 |
| Insulation resistance | 3.6.7.1 | 4.6.8.2 |
| Shell-to-shell conductivity | 3.6.39 | 4.6.39 |
| Thermal shock (temperature cycling) | 3.6.13 | 4.6.13 |
| Durability | 3.6.18 | 4.6.18 |
| Vibration | 3.6.22 | 4.6.22 |
| Salt spray (corrosion) | 3.6.20 | 4.6.20 |
| Ozone exposure | 3.6.38 | 4.6.38 |
| Fluid immersion 2/ | 3.6.28 | 4.6.28 |
| Mating and unmating forces 3/ | 3.6.3 | 4.6.4 |
| DWV at sea level | 3.6.9.1 | 4.6.10.1 |
| DWV at altitude | 3.6.9.2 | 4.6.10.2 |
| Shell-to-shell conductivity | 3.6.39 | 4.6.39 |
| Insulation resistance – room ambient | 3.6.7.1 | 4.6.8.1 |
| Insulation resistance –high temperature | 3.6.7.2 | 4.6.8.2 |
| Contact resistance | 3.6.5.2 | 4.6.6 |
| Final examination of product | 3.7.1 | 4.6.49 |

See footnotes at end of table.



Source: https://assist.dla.mil -- Downloaded: 2016-11-16T06:09Z
Check the source to verify that this is the current version before use.

TABLE XX. Qualification inspection (series 2, classes H and N) - Continued.

| Examination or test | Requirement paragraph | Test paragraph |
|---|---|---|
| Group 7 | | |
| Examination of product | 3.1, 3.3 thru 3.5, 3.7 & 3.8 | 4.6.1 |
| DWV at sea level | 3.6.9.1 | 4.6.10.1 |
| Fluid immersion 2/ | 3.6.28 | 4.6.28 |
| Contact resistance | 3.6.5.2 | 4.6.6 |

1/ Class N only.
2/ Counterpart plugs may be exempted or suitably protected. Only 12 of the 21 samples shall be required to be tested.
3/ Conditioning mating and unmating cycles are not required for this test. Conduct torque measurement only.

TABLE XXI. Retention system qualification (series 2). 1/

| Examination or test | Requirement paragraph | Test paragraph |
|---|---|---|
| Group 1 | | |
| Examination of product | 3.1, 3.3 thru 3.5, 3.7 & 3.8 | 4.6.1 |
| Retention system fluid immersion | 3.6.28.1 | 4.6.28.2 |
| Contact insertion and removal forces | 3.6.11 | 4.6.11 |
| Contact retention | 3.6.32 | 4.6.32 |
| Final examination of product | 3.7.1 | 4.6.49 |
| Group 2 | | |
| Examination of product | 3.1, 3.3 thru 3.5, 3.7 & 3.8 | 4.6.1 |
| Retention system fluid immersion | 3.6.28.1 | 4.6.28.2 |
| Contact insertion and removal forces | 3.6.11 | 4.6.11 |
| Contact retention | 3.6.32 | 4.6.32 |
| Final examination of product | 3.7.1 | 4.6.49 |

See footnote at end of table.



Source: https://assist.dla.mil -- Downloaded: 2016-11-16T06:09Z
Check the source to verify that this is the current version before use.

TABLE XXI. Retention system qualification (series 2, classes L and N) – Continued. 1/

| Examination or test | Requirement paragraph | Test paragraph |
|---|---|---|
| Group 3 | | |
| Examination of product | 3.1, 3.3 thru 3.5, 3.7 & 3.8 | 4.6.1 |
| Retention system fluid immersion | 3.6.28.1 | 4.6.28.2 |
| Contact insertion and removal forces | | |
| Contact retention | 3.6.11 | 4.6.11 |
| Final examination of product | 3.6.32 | 4.6.32 |
| | 3.7.1 | 4.6.49 |
| Group 4 | | |
| Examination of product | 3.1, 3.3 thru 3.5, 3.7 & 3.8 | 4.6.1 |
| Retention system fluid immersion | 3.6.28.1 | 4.6.28.2 |
| Contact insertion and removal forces | 3.6.11 | 4.6.11 |
| Contact retention | 3.6.32 | 4.6.32 |
| Final examination of product | 3.7.1 | 4.6.49 |
| Group 5 | | |
| Examination of product | 3.1, 3.3 thru 3.5, 3.7 & 3.8 | 4.6.1 |
| Retention system fluid immersion | 3.6.28.1 | 4.6.28.2 |
| Contact insertion and removal forces | 3.6.11 | 4.6.11 |
| Contact retention | 3.6.32 | 4.6.32 |
| Final examination of product | 3.7.1 | 4.6.49 |

See footnote at end of table.



Source: https://assist.dla.mil -- Downloaded: 2016-11-16T06:09Z
Check the source to verify that this is the current version before use.

TABLE XXI. Retention system qualification (series 2, classes L and N) – Continued. 1/

| Examination or test | Requirement paragraph | Test paragraph |
|---|---|---|
| Group 6 | | |
| Examination of product | 3.1, 3.3 thru 3.5, 3.7 & 3.8 | 4.6.1 |
| Retention system fluid immersion | 3.6.28.1 | 4.6.28.2 |
| Contact insertion and removal forces | 3.6.11 | 4.6.11 |
| Insertion/removal tool abuse | 3.6.44 | 4.6.45 |
| Contact retention | 3.6.32 | 4.6.32 |
| Final examination of product | 3.7.1 | 4.6.49 |
| Group 7 | | |
| Examination of product | 3.1, 3.3 thru 3.5, 3.7 & 3.8 | 4.6.1 |
| Retention system fluid immersion | 3.6.28.1 | 4.6.28.2 |
| Contact insertion and removal forces | 3.6.11 | 4.6.11 |
| Insertion/removal tool abuse | 3.6.44 | 4.6.45 |
| Contact retention | 3.6.32 | 4.6.32 |
| Contact walk-out | 3.6.45 | 4.6.46 |
| Final examination of product | 3.7.1 | 4.6.49 |

1/ Applicable to non-metallic contact retention systems only.

4.4 Conformance inspection.

4.4.1 Inspection of product for delivery. Inspection of product for delivery shall consist of groups A and B inspection.

4.4.1.1 Inspection lot. An inspection lot shall consist of all connectors of the same shell size, covered by the same MS standard, produced under essentially the same conditions, and offered for inspection at one time.

4.4.1.1.1 Group A inspection. Connectors shall be subjected to the individual tests shown in table XXII for group A inspection. Except for referee purposes, the documentation and standard test conditions of EIA-364 do not apply.



Source: https://assist.dla.mil -- Downloaded: 2016-11-16T06:09Z
Check the source to verify that this is the current version before use.

TABLE XXII. Group A inspection.

| Test | Requirement paragraph | Test paragraph |
|---|---|---|
| Examination of product 1/ | 3.1, 3.3 thru 3.5, 3.7 & 3.8 | 4.6.1 |
| Insulation resistance (series 1) 1/ 2/ 3/ | 3.6.6.1 | 4.6.7.4 |
| Insulation resistance (series 2 ambient temperature) 1/ 2/ 3/ | 3.6.7.1 | 4.6.8.3 |
| Dielectric withstanding voltage (series 1) 1/ 3/ | 3.6.8 | 4.6.9.3 |
| Dielectric withstanding voltage (series 2) 1/ 3/ | 3.6.9 | 4.6.10.3 |
| Air leakage (class H, series 1) 1/ 3/ | 3.6.15 | 4.6.15.2 |
| Air leakage (classes H and N, series 2) 1/ 3/ | 3.6.16 | 4.6.16 |

1/ One hundred percent inspection.
2/ Test between two adjacent contacts and between two peripheral contacts and the shell.
3/ The contractor may use in-process controls for this requirement.

4.4.1.1.1.1 Visual examination. Each connector shall be visually examined for completeness, workmanship, and identification requirements. Missing, twisted, buckled, kinked, or damaged gaskets shall be cause for rejection.

4.4.1.1.2 Rejected lots (group A). Table XXII tests shall be performed on a production lot basis. If one or more defects are found, the lot shall be rescreened for that particular defect and defective parts shall be removed. If one or more defects are found, a new sample shall be randomly selected in table XXIV. If one or more defects are found, the lot shall be rejected and shall not be supplied to this specification. When defects have no effect on the use or performance of the subject parts, reworking of the parts may be permitted upon approval of the qualifying activity.

4.4.1.2 Group B inspection. Group B inspection shall consist of the applicable tests specified in table XXIII, and shall be made on sample units which have been subjected to and have passed the group A inspection. For group B, except for referee purposes, the documentation and standard test conditions of EIA-364 do not apply.

4.4.1.2.1 Sampling plan (group B). A sample size shall be randomly selected as specified in table XXIV. If one or more defects are found, the lot shall be rescreened and defects removed. If one or more defects are found, a new sample shall be randomly selected in table XXIV. If one or more defects are found, the lot shall not be supplied to this specification.

4.4.1.2.2 Lot definition (group B inspection). The production lot definition in accordance with MIL-STD-790 is further defined as follows:

a. A production lot consists of all connectors covered under one military specification or standard, manufactured from the specified raw materials, processed under the same specification and procedures, produced by the same type of equipment, and submitted for inspection at one time. Each production lot of assembled connectors shall be a group identified by a common manufacturing record through all significant assembly operations.
b. Traceability of connectors to specific physical/chemical test reports of incoming raw material is not required.
c. Common manufacturing records and traceability shall begin with machining and molding and shall include connector assembly.



Source: https://assist.dla.mil -- Downloaded: 2016-11-16T06:09Z
Check the source to verify that this is the current version before use.

TABLE XXIII. Group B inspection.

| Test | Requirement paragraph | Test paragraph |
|---|---|---|
| Examination of product | 3.1, 3.3 thru 3.5, 3.7, & 3.8 | 4.6.1 |
| Gage location and retention 1/ 2/ | 3.6.31 | 4.6.31 |

1/ The contractor may use in-process controls for this requirement, when that is not related to lot sizes of finished connectors, provided an equivalent or tighter quality level is maintained.

2/ For series 2, insert position can be assured by checking dimension FF on the plug and dimension CC on the receptacle.

TABLE XXIV. Sampling plan for group B.

| Lot size | Sample size |
|---|---|
| 1 to 13 | 100 percent |
| 14 to 150 | 13 units |
| 151 to 280 | 20 units |
| 281 to 500 | 29 units |
| 501 to 1200 | 34 units |
| 1200 to 3200 | 42 units |

4.4.1.2.3 Disposition of sample units. Sample units which have passed group B inspection may be delivered on the contract or purchase order if the lot is accepted and sample units are still within specified tolerances.

4.5 Periodic inspection. Qualification verification inspection shall consist of group C. Except when the results of these inspections show noncompliance with the applicable requirements (see 4.5.1.1.5), delivery of products which have passed group B shall not be delayed pending the results.

4.5.1 Group C inspection. Group C inspection shall consist of the tests specified in table XXV and table XXVI in the order shown. Group C inspection shall be performed every 24 months, which must be accomplished within this period after notification of qualification. Group C inspection shall be performed on sample units selected from inspection lots which have passed the groups A and B inspection.

4.5.1.1 Sampling plan. Every 24 months, mated connector sample units which have passed groups A and B inspections shall be subjected to the tests specified in table XXV and table XXVI. Samples shall be selected in sufficient quantity to provide two samples per applicable test group (table XXV and table XXVI), as determined by the series (series 1 or series 2) and the class of the samples to be tested.



Source: https://assist.dla.mil -- Downloaded: 2016-11-16T06:09Z
Check the source to verify that this is the current version before use.

TABLE XXV. Group C inspection (series 1).

| Test | Requirement paragraph | Test paragraph |
|---|---|---|
| Group 1 | | |
| Contact retention (solder contacts) | | |
| Durability | 3.6.32 | 4.6.32.1 |
| Humidity | 3.6.17 | 4.6.17 |
| Air leakage (solder contacts) | 3.6.25 | 4.6.25 |
| Mating and unmating forces | 3.6.15.1 | 4.6.15.1 |
| | 3.6.2 | 4.6.3 |
| Group 2 | | |
| Contact retention (solder contacts) | | |
| Air leakage (solder contacts) | 3.6.32 | 4.6.32.1 |
| Salt spray (corrosion) | 3.6.15.1 | 4.6.15.1 |
| Mating and unmating forces | 3.6.19 | 4.6.19 |
| | 3.6.2 | 4.6.3 |
| Group 3 | | |
| Durability | 3.6.17 | 4.6.17 |
| Humidity | 3.6.25 | 4.6.25 |
| Group 4 | | |
| Salt spray (corrosion) | 3.6.19 | 4.6.19 |
| Group 5 | | |
| Contact retention (solder contacts) | | |
| Durability | 3.6.32 | 4.6.32.1 |
| Water pressure | 3.6.17 | 4.6.17 |
| Air leakage (solder contacts) | 3.6.14 | 4.6.14 |
| Mating and unmating forces | 3.6.15.1 | 4.6.15.1 |
| | 3.6.2 | 4.6.3 |



Source: https://assist.dla.mil -- Downloaded: 2016-11-16T06:09Z
Check the source to verify that this is the current version before use.

TABLE XXV. Group C inspection (series 1) - Continued.

| Test | Requirement paragraph | Test paragraph |
|---|---|---|
| Group 6 | | |
| Contact retention (solder contacts) | | |
| Air leakage (solder contacts) | 3.6.32 | 4.6.32.1 |
| Salt spray (corrosion) | 3.6.15.1 | 4.6.15.1 |
| Mating and unmating forces | 3.6.19 | 4.6.19 |
| | 3.6.2 | 4.6.3 |

TABLE XXVI. Group C inspection (series 2).

| Test | Requirement paragraph | Test paragraph |
|---|---|---|
| Group 1 | | |
| Gage location and retention | 3.6.31 | 4.6.31 |
| Durability | 3.6.18 | 4.6.18 |
| Mating and unmating forces | 3.6.3 | 4.6.4 |
| Humidity | 3.6.26 | 4.6.26 |
| Mating and unmating forces | 3.6.3 | 4.6.4 |
| Group 2 | | |
| Gage location and retention | 3.6.31 | 4.6.31 |
| Salt spray (corrosion) | 3.6.20 | 4.6.20 |
| Mating and unmating forces | 3.6.3 | 4.6.4 |
| Group 3 | | |
| Durability | 3.6.18 | 4.6.18 |
| Humidity | 3.6.26 | 4.6.26 |



Source: https://assist.dla.mil -- Downloaded: 2016-11-16T06:09Z
Check the source to verify that this is the current version before use.

TABLE XXVI. Group C inspection (series 2) - Continued.

| Test | Requirement paragraph | Test paragraph |
|---|---|---|
| Group 4 | | |
| Mating and unmating forces | 3.6.3 | 4.6.4 |
| Salt spray (corrosion) | 3.6.20 | 4.6.20 |
| Mating and unmating forces | 3.6.3 | 4.6.4 |
| Group 5 | | |
| RFI finger spring force | 3.6.44 | 4.6.44 |
| Shell conductivity | 3.6.39 | 4.6.39 |
| Durability | 3.6.18 | 4.6.18 |
| Mating and unmating forces | 3.6.3 | 4.6.4 |
| Salt spray (corrosion) | 3.6.20 | 4.6.20 |
| Mating and unmating forces | 3.6.3 | 4.6.4 |
| Group 6 | | |
| Mating and unmating forces | 3.6.3 | 4.6.4 |
| Salt spray (corrosion) | 3.6.20 | 4.6.20 |
| Mating and unmating forces | 3.6.3 | 4.6.4 |

4.5.1.1.1 Connector samples (series 1). For group C testing, series 1 connectors shall be provided as follows:

a. Class E, F or P – Separate samples (complete connector assemblies or mated pairs) are required for crimp-contact connectors and solder-contact connectors. Four mated pairs with each type finish shall be provided. Two mated pairs shall have pin contacts in the plug and socket contacts in the receptacle, and shall be wired with approximately three feet of wire approaching the minimum OD specified in table II. The other two mated pairs shall have socket contacts in the plug and pin contacts in the receptacle, and shall be wired with approximately 3 feet (.9144 m) of wire approaching the maximum OD specified in table II. Two of the mated pairs (one with minimum wire and one with maximum wire) shall be subject to test group 1 in table XXV. The other two mated pairs shall be subjected to test group 2 in table XXV.



Source: https://assist.dla.mil -- Downloaded: 2016-11-16T06:09Z
Check the source to verify that this is the current version before use.

b. Class H – Four mated pairs shall be provided together with counterpart class E straight plugs. The connectors shall be wired with approximately three feet of wire of nominal gage specified in table II. The mated pairs shall be subjected to test groups 3 and 4 in table XXV.

c. Class J – Four mated pairs of class J connectors, assembled as specified in 4.3.2.1.4a, shall be divided into two equal groups and shall be subjected to test groups 5 and 6 in table XXV.

4.5.1.1.2 Connector samples (series 2). For group C testing, series 2 connectors shall be provided as follows:

a. Class D, L, T, W, Z – Four complete connector assemblies (or mated pairs) of each finish shall be provided. Two mated pairs shall have pin contacts in the plug and socket contacts in the receptacle, and shall be wired with approximately 3 feet (.9144 m) of wire approaching the applicable minimum OD specified in table II. The remaining mated pairs shall have socket contacts in the plug and pin contacts in the receptacle, and shall be wired with approximately 3 feet (.9144 m) of wire approaching the applicable maximum OD specified in table II. Fifty percent of the samples with pin contacts in the plug and fifty percent of the samples with socket contacts in the plug shall be subjected to the tests in table XXVI, group 1. The balance of the samples shall be subjected to the tests in table XXVI, test group 2.

b. Classes H and N – Four samples of each class shall be provided, together with counterpart class L plugs. Two mated pairs of each class shall be wired with wire of nominal gage within the applicable range of table II and subjected to the tests in table XXVI, group 3. The balance of the samples shall have the full complement of contacts installed in the plugs but need not be wired. These shall be subjected to the tests in table XXVI, test group 4.

c. RFI plugs – Four samples of class D, L, T, W, Z shall be provided, together with counterpart receptacles. These samples shall have a full complement of contacts installed but need not be wired. The mated pairs shall be divided into two equal groups and shall be subjected to the tests in table XXVI, test groups 5 and 6. In addition, two receptacle connectors without inserts and with the bayonet pins removed shall be provided for test aids for group 5 (RFI finger spring force).

4.5.1.1.3 Failures. If one or more sample units fail to pass group C inspection, the sample shall be considered to have failed, and corrective action shall be taken in accordance with 4.5.1.1.5.

4.5.1.1.4 Disposition of sample units. Sample units which have been subjected to group C inspection shall not be delivered on the contract or purchase order.

4.5.1.1.5 Noncompliance. If a sample fails to pass group C inspection, the supplier shall take corrective action on the materials or processes, or both, as warranted, and on all units of product which can be corrected and which were manufactured with essentially the same materials, processes, etc., and which are considered subject to the same failure. Acceptance of the product shall be discontinued until corrective action, acceptable to the qualifying activity, has been taken. After the corrective action has been taken, group C inspection shall be repeated on additional sample units (all inspections, or beginning with the inspection which the original sample failed, at the option of the qualifying activity). Groups A and B inspections may be reinstituted; however, final acceptance shall be withheld until the group C reinspection has shown that the corrective action was successful. In the event of failure after reinspection, information concerning the failure and corrective action taken shall be furnished to the cognizant inspection activity and the qualifying activity.



Source: https://assist.dla.mil -- Downloaded: 2016-11-16T06:09Z
Check the source to verify that this is the current version before use.

4.6 Methods of examination and tests.

4.6.1 Examination of product. The connectors, accessories, and piece parts shall be examined to ensure conformance with this specification and the applicable detail documents not covered by the performance requirements of 3.6. In-process controls of component parts, unrelated to lot sizes of finished connectors, may be utilized in lieu of examination of these components in the finished connectors to assure conformance of these component parts. Visual inspection of each molded contact retention device for molding discrepancies shall be a required in process control for all removable contact connectors.

Examination in a continuing manner shall be performed to assure compliance with the following requirements:

a. Applicable MS standard.
b. Materials.
c. Design and construction.
d. Interchangeability.
e. Finish.
f. Marking.
g. Workmanship.

4.6.2 Maintenance aging (crimp contacts only) (see 3.6.1). Connectors shall be tested in accordance with test procedure EIA-364-24. The following details shall apply:

a. Contacts shall be removed and reinserted once using the appropriate MIL-I-81969/17 and MIL-I-81969/19 tools for series 1 and MIL-I-81969/14 for series 2.
b. Connectors shall be mated and unmated 10 times. A minimum of 20 percent but not less than three of the contacts shall be removed and reinserted nine times.
Maximum forces shall be as specified in table X.

4.6.3 Mating and unmating forces (series 1) (see 3.6.2). Mating connectors shall be tested in accordance with test procedure EIA-364-13. The following details shall apply:

a. Rate of mating and unmating shall be one inch-pound per second.
b. Torque requirements shall be as specified in table V.

4.6.4 Mating and unmating forces (series 2) (see 3.6.3). Mating connectors shall be tested in accordance with test procedure EIA-364-13. The following details shall apply:

a. Rate of mating and unmating shall be one inch-pound per second.
b. There shall be 10 cycles of mating and unmating and torque shall be measured on the first and last cycle.
c. Torque requirements shall be as specified in table VI.

4.6.5 Contact resistance (series 1) (see 3.6.4). Contact resistance shall be measured in accordance with test procedure EIA-364-06. For class H contacts, test current for sizes 20, 16, and 12 shall be 5.0, 10.0, 17.0 amperes, respectively.

4.6.6 Contact resistance (series 2, hermetic connector contacts only) (see 3.6.5). Contact resistance shall be measured in accordance with test procedure EIA-364-06. For class H and N contacts, test current for sizes 20, 16, and 12 shall be 5.0, 10.0, 17.0 amperes, respectively.



Source: https://assist.dla.mil -- Downloaded: 2016-11-16T06:09Z
Check the source to verify that this is the current version before use.

4.6.7 Insulation resistance (series 1) (see 3.6.6). Unmated connectors shall be tested in accordance with test procedure EIA-364-21.

4.6.7.1 At ambient temperature (see 3.6.6.1). The following details shall apply:

Measurement shall be made between all, but not more than 6, pairs of adjacent contacts and between all, but not more than 6, contacts adjacent to the shell, and the shell. Contacts selected shall be those having the closest spacing between measuring points. Temperature shall be 25° ± 3°C.

4.6.7.2 At elevated temperature (short time) (see 3.6.6.2). The details of 4.6.7.1 and the following details shall apply:

Connectors shall be exposed to a temperature of 125° ± 3°C for 250 hours. During this period, at least eight measurements shall be recorded at intervals of not less than 24 hours. After the completion of the 250 hours and while at 125° ± 3°C, measurements shall be recorded on all samples.

4.6.7.3 At elevated temperature (long time) (see 3.6.6.3). The details of 4.6.7.1 and the following details shall apply:

The connectors shall be exposed to a temperature of 105°± 3°C for 1,000 hours. At the end of this period and while the connectors are still at elevated temperature, measurements shall be recorded.

4.6.7.4 Insulation resistance for Group A inspection (series 1). The procedure of 4.6.7.1 shall apply except simulated contacts may be used and measurements need only be made between at least one pair of adjacent contacts and between one peripheral contact and the shell.

4.6.8 Insulation resistance (series 2) (see 3.6.7). Wired, unmated connectors shall be tested in accordance with test procedure EIA-364-21.

4.6.8.1 At ambient temperature (see 3.6.7.1). The following details shall apply:

Measurements shall be made between each wired contact and all other wired contacts and the shell electrically connected together.

4.6.8.2 At elevated temperature (see 3.6.7.2). The details of 4.6.8.1 and the following details shall apply:

Connectors shall be exposed to a temperature of 200° ± 3°C (classes D, H, N, T, W and Z 175° ± 3°C) for a minimum of 30 minutes. Measurements shall then be recorded while the connectors are still at the elevated temperature.

4.6.8.3 Insulation resistance for Group A inspection (series 2). The procedure of 4.6.8.1 shall apply except simulated contacts may be used and the measurements shall be made between at least one pair of adjacent contacts and between one peripheral contact and the shell.

4.6.9 Dielectric withstanding voltage (series 1) (see 3.6.8). Unmated connectors shall be tested in accordance with test procedure EIA-364-20, test method A.



Source: https://assist.dla.mil -- Downloaded: 2016-11-16T06:09Z
Check the source to verify that this is the current version before use.

4.6.9.1 At sea level (see 3.6.8). The following details shall apply:

The applicable test voltage in table XXVII shall be applied between all adjacent contacts and between the shell and each peripheral contact for a minimum of five seconds. If an insert possesses two service ratings, similar connections shall be made for the different test voltages, as necessary.

4.6.9.2 At altitude (see 3.6.8). The details of 4.6.9.1 and the following details shall apply:

a. Connectors shall be tested after 30 minutes at the simulated altitude in table XXVII.
b. Only the engaging face of classes H and J shall be subjected to the high altitude. The rear faces shall be suitably protected.

4.6.9.3 Dielectric withstanding voltage for Group A inspection (series 1). The procedure of 4.6.9.1 shall apply except simulated contacts may be used and the period of application of test voltage shall be one second minimum.

4.6.10 Dielectric withstanding voltage (series 2) (see 3.6.9). Unmated, wired connectors shall be tested in accordance with test procedure EIA-364-20, test method A.

4.6.10.1 At sea level (see 3.6.9.1). The following details shall apply:

The applicable test voltage in table XXVII shall be applied between each contact and each adjacent contact and the shell for a minimum period of one minute at the standard test conditions. Switching transient potentials in excess of the specified test voltage shall not be permitted.

4.6.10.2 At altitude (see 3.6.9.2). The details of 4.6.10.1 and the following details shall apply:

a. Connectors shall be placed in a suitable chamber and stabilized for a minimum period of one minute at each altitude specified in table XXVII prior to the application of test voltages.
b. The rear faces of classes H and N connectors shall be suitably protected.

TABLE XXVII. Dielectric withstanding voltage.

| Altitude (ft) | Minimum test voltages, ac (rms) | |
|---|---|---|
| | Service rating I | Service rating II |
| Sea level | 1,500 | 2,300 |
| 50,000 | 500 | 750 |
| 70,000 | 375 | 500 |
| 110,000 | 200 | 200 |

4.6.10.3 Dielectric withstanding voltage for Group A inspection (series 2). The procedure of 4.6.10.1 shall apply except simulated contacts may be used and the period of application of test voltage shall be one second minimum.

4.6.11 Contact insertion and removal forces (removable crimp contacts) (see 3.6.10 or 3.6.11). Unmated, wired connectors shall be tested in accordance with test procedure EIA-364-05. The following details shall apply:

a. Backshells shall be removed.
b. Applicable wire in accordance with SAE-AS22759 shall be used.



Source: https://assist.dla.mil -- Downloaded: 2016-11-16T06:09Z
Check the source to verify that this is the current version before use.

4.6.12 Thermal shock (temperature cycling) (series 1) (see 3.6.12). Unmated connectors shall be tested in accordance with test procedure EIA-364-32. The following details shall apply:

Test condition letter A, minimum temperature -55ºC and maximum temperature 125ºC.

4.6.13 Thermal shock (temperature cycling) (series 2) (see 3.6.13). Mated, wired connectors, shall be tested in accordance with test procedure EIA-364-32, condition I, 5 cycles, with the following exceptions:

a. Classes L and A minimum temperature -55°C (-67°F), maximum temperature 200°C (392°F).
b. Classes D, H, N, T, W and Z minimum temperature -55°C (-67°F), maximum temperature 175°C (392°F).

4.6.14 Water pressure (series 1) – (Applicable to solder-type contact connectors, class E receptacles and class J plugs) (see 3.6.14). The connectors shall be immersed in tap water to a depth of 6 feet for a period of 48 hours in the following manner:

a. Plugs with "J" adapters shall be assembled to test cylinders (see table XVII) which simulate jacketed cables.
b. Class E receptacles shall be mounted by their normal mounting means, with mounting flange gaskets. Jam nut mounting receptacle flanges shall be sealed only with O-ring seals provided as accompanying hardware. One-half of the wall mounting receptacles shall be front mounted and the remaining half shall be back mounted. The terminal ends of the receptacles shall be external to the tank.
c. Fifty percent of the connectors tested shall be mated, and insulation resistance of the mated immersed connectors shall be measured and values recorded at the end of the 48-hour period. The other fifth percent of the connectors shall be tested unmated. Upon completion of the test, the connectors shall be removed from the tank, all external moisture removed from the connectors by shaking them at room temperature, and insulation resistance measured and recorded within one-half hour after removal from the water. All mated connectors shall be inspected for internal leakage of water at the connector interface and cable housing. All unmated plugs with "J" adapters shall be inspected for water penetration into the adapter. Class E receptacles, mated and unmated shall be inspected for leakage through or around the insert and for leakage of the panel seals.

4.6.15 Air leakage (series 1) (see 3.6.15).

4.6.15.1 Classes E, F, J, and P. Solder contact receptacles and class J plugs shall be mounted in a manner suitable for application of a 30 $lb_f/in^2$ (2.11 $Kg/cm^2$) pressure differential across the connectors. The leakage rates shall be measured in both in either direction after the connector has been exposed to -55º ± 3ºC (-67ºF) for 30 minutes, and allowed to return to room temperature.

4.6.15.2 Class H. Class H receptacles shall be mounted in a manner suitable for the application of 1atmosphere pressure differential across the receptacles and tested in accordance with test procedure EIA-364-02, except the minimum period of measurement shall be 10 seconds. The leakage rate shall be determined while pressurized air or gas, containing not less than 10 percent of helium by volume, is applied to the receptacle.

4.6.15.3 Stowage receptacles and protective covers. Stowage receptacles and protective covers shall be mated to connectors having either contacts or inserts removed so that a pressure of 10 $lb_f/in^2$ (.703 $Kg/cm^2$) can be applied against the insides of the protective covers or stowage receptacles.



Source: https://assist.dla.mil -- Downloaded: 2016-11-16T06:09Z
Check the source to verify that this is the current version before use.

4.6.16 Air leakage (series 2, classes H and N) (see 3.6.16). Classes H and N receptacles shall be mounted in a suitable test apparatus for the application of specified test pressure across the connector. Wires attached to receptacles for any of the previous tests may be removed for this test. A suitable means shall be used for determining the leakage of air, or gas containing not less than 10 percent helium by volume through the connector while the specified test pressures are maintained for a minimum period of 1 minute.

4.6.17 Durability (series 1) (see 3.6.17). Counterpart connectors shall be mated and unmated 500 times at a rate of 200 ± 100 cycles per hour with the coupling rings operated in a manner to simulate actual service.

4.6.18 Durability (series 2) (see 3.6.18). The wired, assembled plugs and receptacles shall be subjected to the number of cycles of mating and unmating specified in 3.6.18 and 3.6.18.1, at the rate of 200 ± 100 cycles per hour. The coupling rings shall be operated in a manner to simulate actual service. The plug and receptacle shall be completely separated during each cycle.

4.6.19 Salt spray (corrosion) (series 1, class H ) (see 3.6.19). Unmated connectors and protective covers shall be tested in accordance with test procedure EIA-364-26. The following details shall apply:

a. Test condition letter – B.
b. Connectors shall not be dipped in water after exposure.
c. Prior to all subsequent tests, corrosion tested connectors shall be engaged and disengaged for one cycle to remove free salt deposits. Contact resistance shall be measured on the first mating of the connector.

4.6.20 Salt spray (corrosion) (series 2, classes A, H, L and N) (see 3.6.20). Unmated, wired connectors shall be tested in accordance with test procedure EIA-364-26. The following details shall apply:

a. Test condition letter – B. Four hundred fifty-two (452) hours mated followed by forty-eight (48) hours unmated.
b. Class N connectors shall have their rear faces suitably protected.

4.6.20.1 Salt spray (corrosion) (dynamic test, series 1, finishes D, T, W and Z, and series 2, classes D, T, W and Z) (see 3.6.20). The wired assembled plugs and receptacles shall be mated and unmated 50 cycles of durability at a rate of 200 ± 100 cycles per hour. The details specified in 4.6.18 shall apply. The sample connectors shall then be subjected to the spray test in accordance with test procedure EIA-364-26, the following details and exceptions shall apply:

a. Four hundred fifty-two (452) hours mated followed by forty-eight (48) hours unmated.
b. The samples shall not be mounted, but shall be suspended from the top using waxed twine or string, glass rod or glass cord.
c. Wire ends must be protected to prevent salt migration.

After salt spray exposure, the remaining number of durability cycles specified in 3.6.18 or 3.6.18.1 shall be completed. Requirements of 3.6.18 or 3.6.18.1 and 3.6.20 shall apply.

4.6.21 Vibration (series 1) (see 3.6.21). Mated connectors shall be tested in accordance with test procedure EIA-364-28. The following details shall apply:

a. Test condition number – III.
b. All contacts shall be wired in series.
c. Discontinuity shall be 10 microseconds maximum.



Source: https://assist.dla.mil -- Downloaded: 2016-11-16T06:09Z
Check the source to verify that this is the current version before use.

4.6.22 Random vibration (series 2) (see 3.6.22). Wired, mated connectors shall be tested in accordance with test procedure EIA-364-28. The following details shall apply:

a. The connector shall be mounted on the table by normal means.
b. Test condition IV- letter J.
c. The duration of test shall be 8 hours in the longitudinal direction and 8 hours in the perpendicular direction (see table XXVIII for the breakdown in duration and temperature). All contacts shall be wired in a series circuit and 100 to 150 milliamperes shall be caused to flow during vibration.

TABLE XXVIII. Vibration duration and temperature requirement (series 2).

| Class | Duration | Standard temperature | Duration | Low temperature | Duration | High temperature |
|---|---|---|---|---|---|---|
| H,L,N | 50% | 15°C to 35°C (59°F to 95°F) | 25% | -55° ± 3°C (-67° ± 3°F) | 25% | 200°C ± 3° (392°F ± 3°) |

4.6.23 Shock (specified pulse) (series 1) (see 3.6.23). Mated, wired connectors shall be tested in accordance with test procedure EIA-364-27. The following details shall apply:

a. Test condition letter – A.
b. One shock in each direction of the three major axes.
c. All contacts shall be wired in series with 100 ± 10 milliamperes of current flowing through the contacts during the test.
d. Discontinuity shall be 10 microseconds maximum.

4.6.24 Shock (specified pulse) (series 2) (see 3.6.24). Mated, wired connectors shall be tested in accordance with test procedure EIA-364-27. The following details shall apply:

a. The pulse shall be an approximate half sine wave of 300 G ± 15 percent magnitude, with a duration of 3 ± 1 milliseconds.
b. One shock in each direction of the three major axes.
c. All contacts shall be wired in series with 100 ± 10 milliamperes of current flowing through the contacts during the test.
d. Discontinuity shall be 1 microsecond maximum.

4.6.25 Humidity (series 1) (see 3.6.25).

4.6.25.1 Crimp contact connectors. Mated connectors shall be tested in accordance with test procedure EIA-364-31. The following details shall apply:

a. 100 volt dc polarization voltage during steps 1 through 6 applied between alternate contacts connected together electrically and the remaining contacts and metal connector shell connected together electrically. Polarity of the metal shell shall be negative.
b. Mated test samples.
c. Method IV, temperature cycling test.
d. The insulated conductors used for measurements of insulation resistance shall have an insulation resistance greater than 100 kilohms.
e. After a minimum of 3 hours at step 7 of the tenth cycle, insulation resistance shall be measured while connectors are subjected to high humidity conditions. Following the tenth cycle measurements, the connectors shall be maintained at a temperature of 25°C ± 2°C and 50 percent relative humidity for 24 hours. Insulation resistance shall again be measured while at this environment.



Source: https://assist.dla.mil -- Downloaded: 2016-11-16T06:09Z
Check the source to verify that this is the current version before use.

4.6.25.2 Solder contact connectors. Mated solder contact connectors shall be subjected to the following test. The test chamber shall consist of a box approximately 12 inches (.305 meters) deep by 16 inches (.406 meters) wide by 24 inches (.610 meters) long, capable of being sealed, and shall be constructed of materials that will not, in the presence of water, affect deterioration of the samples.

A suitable open screen tray shall be provided to support the test specimens approximately 8 inches (.203 meters) below the top of the box. Provisions shall be made to bring out wires for measurement purposes through vapor-tight seals near the top of the box. Suitable controls shall be provided that will cause the chamber air temperature to vary 5°C (9°F) once each hour for 20 days, from any temperature between 22° and 28°C (72°F and 82°F), causing heavy condensation to form on the samples once each hour. The bottom of the test chamber shall be covered with approximately .250 inch (6.35 millimeter) of tap water to start the test. The heat application to supply the temperature variation shall be radiant in nature and shall be applied to the underside of the test chamber.

4.6.26 Humidity (series 2) (see 3.6.26). Wired, mated connectors shall be tested in accordance with test procedure EIA-364-31. The following details shall apply:

a. Test procedure (b).
b. The test sample shall be mounted horizontally with the wires descending into the backshell.
c. Wires shall be brought out of the chamber through vapor tight seals.
d. There shall be no wire splices in the chamber.
e. Connectors without rear seal grommets (classes H and N) shall have their rear terminals suitably protected.
f. After completion of step 6 of the final cycle, insulation resistance shall be measured while the connectors are subjected to the high humidity condition.

4.6.27 Fluid immersion (series 1) (see 3.6.27). Unmated connectors shall be immersed fully in the fluids specified below for the required periods. At least one connector shall be immersed in each fluid. After removal from the fluid, each connector shall remain for 1 hour in free air at room conditions. Subsequent testing shall be performed on connectors mated with mating connectors that had been immersed simultaneously.

a. Hydraulic fluid in accordance with MIL-PRF-5606 – 20 hours.

b. Lubricating oil in accordance with MIL-PRF-7808 – 20 hours.

4.6.28 Fluid immersion (series 2) (see 3.6.28).

4.6.28.1 Classes D, H, L , N, T, W, and Z (see 3.6.28.1). At least twelve connectors (one for each fluid as detailed in table XXIX) of each class shall be subjected to each of the tests in table XXIX. After testing in accordance with the individual test procedure, the connectors shall be visually (no magnification) inspected for cracks and tears and shall be mated by hand.

4.6.28.2 Retention system fluid immersion (series 2, classes D, L, N, T, W and Z) (see 3.6.28.2). Connectors shall be unmated and contacts shall be removed. Connectors shall be immersed in the following fluids (one sample per fluid) for 20 hours at room temperature (applicable to non-metallic contact retention systems only).



Source: https://assist.dla.mil -- Downloaded: 2016-11-16T06:09Z
Check the source to verify that this is the current version before use.

| Sample number | Test fluid |
|---|---|
| 1 | MIL-DTL-5624 (grade JP-5) |
| 2 | Coolanol 25 or equivalent |
| 3 | MIL-PRF-5606 |
| 4 | MIL-PRF-7808 |
| 5 | MIL-PRF-23699 |
| 6 | Methyl alcohol |
| 7 | Isopropyl alcohol |

After removal, excess fluid shall be allowed to drain from the connectors for 4 hours and the contacts shall be reinstalled. The connectors shall then be subjected to the subsequent tests specified in table XXI.

TABLE XXIX. Test fluids (series 2, classes D, H, L, N, T, W and Z).

| Test no. | Test fluid | Test procedure |
|---|---|---|
| 1 | MIL-PRF-7808 | Immerse unmated connectors in fluid at 120º ± 3ºC (248º ± 5ºF) for 5 minutes. Remove connectors and allow to drain for 1 hour at room temperature. Fluid shall be drained from all recesses. Mate connectors and expose to 125º ± 3ºC (257º ± 5ºF) in an air circulating oven for 6 hours. Remove connectors and allow to stabilize at room temperature for 1 hour minimum. Repeat procedure for a total of seven cycles. |
| 2 | MIL-PRF-23699 | Identical procedure to sample 1. |
| 3 | MIL-PRF-5606 | Immerse unmated connectors in fluid at 85º ± 3ºC (185º ± 5ºF)for 5 minutes. Remove connectors and allow to drain for a minimum of 1 hour at room temperature. Fluid shall be drained from all recesses. Mate connectors and expose to 100º ± 3ºC (212º ± 5ºF) in an air circulating oven for 6 hours. Remove connectors and allow to stabilize at room temperature for a minimum of 1 hour. Repeat procedure for a total of seven cycles. |
| 4 | Hydraulic fluid 1/ | Identical procedure to sample 3. |
| 5 | SAE-AMS1424 (or ethylene glycol) | Immerse mated connectors in fluid at 65º ± 3ºC (149º ± 5ºF) for 5 minutes. Remove connectors and allow to drain for 1 hour minimum at room temperature. Fluid shall be drained from all recesses. Unmate and expose connectors to 100º ± 3ºC (212º ± 5ºF) in an air circulating oven for 6 hours. Remove connectors and allow to stabilize at room temperature for a minimum of 1 hour. Repeat procedure for a total of seven cycles. |
| 6 | MIL-PRF-87937 (diluted for cleaning) | Identical procedure to sample 5. |
| 7 | MIL-DTL-5624 (grade JP-5) | Immerse unmated connectors in fluid at room temperature for 5 minutes. Remove connectors and allow to drain for 1 hour at room temperature. Fluid shall be drained from all recesses. Mate connectors and expose to 55º ± 3ºC (131º ± 5ºF) in an air circulating oven for 6 hours. Remove connectors and allow to stabilize at room temperature for a minimum of 1 hour. Repeat procedure for a total of seven cycles. |

See notes at end of table.



Source: https://assist.dla.mil -- Downloaded: 2016-11-16T06:09Z
Check the source to verify that this is the current version before use.

TABLE XXIX. Test fluids (series 2, classes D, H, L, N, T, W and Z) - Continued.

| Test no. | Test fluid | Test procedure |
|---|---|---|
| 8 | Coolant-dielectric fluid synthetic silicate ester base 2/ | Unmated connectors shall be preconditioned at 175° ± 3°C (347° ± 5°F) for 30 minutes. Immerse connectors fully in room temperature fluid for 1 minute. Remove connectors and allow to stabilize at room temperature for a minimum of 1 hour. Fluid shall be drained from all recesses. |
| 9 | ASTM D4814 (type 1) (or equivalent gasoline) | The wired assembled unmated connectors shall be immersed in the fluid at 25° ± 3°C (77° ± 5°F) for a minimum of 5 minutes, removed from the fluid and exposed to free air for 24 ± 2 hours. This conditioning cycle shall be repeated until the connector has been subjected to 5 complete cycles; for a maximum of one cycle, the exposure to free air may be extended to 75 hours. |
| 10 | Solvent (a) specified in method 215 of MIL-STD-202 | Identical procedure to sample 9. |
| 11 | Solvent (c) specified in method 215 of MIL-STD-202 | Identical procedure to sample 9. |

1/ M2-V Chevron oil or equivalent.
2/ Coolanol 25 or equivalent.

4.6.29 Insert retention (series 1) (see 3.6.29). Connectors, less insert removable grommets or insert supporting accessories, shall be tested in accordance with test procedure EIA-364-35.

4.6.30 Insert retention (series 2, class D, L, T, W and Z) (see 3.6.30). Unmated, wired connectors, with backshells removed, shall be tested in accordance with test procedure EIA 364-35. The following details shall apply:

Samples shall be divided into two equal groups and designated A and B. Group A shall have an axial load applied to the mating face and group B shall have an axial load applied to the rear face.

4.6.30.1 Insert retention (series 2, classes H and N) (see 3.6.30.1). Unmated receptacles shall be tested in accordance with test procedure EIA-364-35. The following details shall apply:

a. Pressure to be applied shall be 100 $lb_f/in^2$ ± 1 (7.03 $Kg/cm^2$) percent.
b. Pressure shall be applied to the mating face and then to the rear face.

4.6.31 Gage location and retention (crimp type contacts) (see 3.6.31). Applicable test gages shall be installed in 3 randomly selected cavities of each connector. Accessory rear hardware shall be removed, and remaining cavities shall have contacts in place. With the test gages fully seated back against the contact retention device, the axial location of the front end of the gages shall be measured relative to the reference point indication on figure 5.



Source: https://assist.dla.mil -- Downloaded: 2016-11-16T06:09Z
Check the source to verify that this is the current version before use.

The axial load specified in table XI shall then be applied to individual test gages in both directions. The load shall be applied at a rate of approximately 1 pound (.453 kg) per second until the specified load has been reached. Gage displacement shall be measured with respect to the connector shell after an initial load of 2 pounds (.907 kg) has been applied to assure that all slack between the gage and the retention device has been removed. For group B inspection, gage displacement (retention) measurements are not required, and remaining contact cavities may be empty.

4.6.32 Contact retention (see 3.6.32). Connectors shall be tested in accordance with test procedure EIA-364-29. Axial loads shall be as specified in table XI. The following details shall apply:

a. Number of samples – The test shall be performed on 20 percent of the contact complement; but not less than three contacts in each connector half.
b. Applied axial load – Preload to 3 pounds (1.36 kg) maximum. Apply load as specified in table XI.
c. Special requirements – Where the test sequence requires maintenance aging prior to contact retention, the contacts which were subjected to maintenance aging shall also be selected for contact retention.
d. Axial direction – The applicable forces shall be applied along the longitudinal axes of individual contacts in the direction tending to displace the contacts to the rear.
e. Only the contacts to be tested need be installed in the connector.

4.6.32.1 Solder type and class N. Contact displacement shall be measured after the axial load has been removed. For class N connectors, the test shall apply to the pin contact members only.

4.6.32.2 Crimp types. Contact displacement shall be measured with the contact under load, after the load has been applied for a minimum of 5 seconds. Retention of the crimp terminals of class N connectors shall be similarly tested.

4.6.33 Contact engaging and separating forces (series 1) (see 3.6.33). Socket contacts shall be tested in accordance with the contact engagement and separation test in accordance with SAE-AS39029. Solder contacts may be tested installed in the connectors.

4.6.34 Probe damage (series 1) (see 3.6.34). Socket contacts shall be tested in accordance with test procedure EIA-364-25. The following detail shall apply:

Probe depth shall be .50 inch (12.7 mm), .750 inch (19.05 mm), and full.

4.6.35 Cover chain, tensile strength (series 1) (see 3.6.35). The protective cover shall be securely held and a tensile static load of 25 pounds (11.34 kg) shall be applied to the end of the chain for 5 minutes in each of the following directions as specified:

a. With the axis of the chain at right angles to the axis of the holding fastener.
b. With the axis of the chain in the same axis as that of the fastener.

4.6.36 Altitude immersion (series 2) (see 3.6.36). Mated, wired connectors shall be tested in accordance with test procedure EIA-364-03. The following details shall apply:

Dielectric withstanding voltage and insulation resistance shall be measured as specified in 4.6.10 and 4.6.8 after the third cycle with the connectors still submerged in the solution.



Source: https://assist.dla.mil -- Downloaded: 2016-11-16T06:09Z
Check the source to verify that this is the current version before use.

4.6.37 Temperature life (series 2, class H) (see 3.6.37). Mated, wired connectors shall be tested in accordance with test procedure EIA-364-17. The following details shall apply:

a. Temperature test condition – 6, except contacts shall not carry current.
b. Test time condition – D.
c. Contact resistance shall be measured in accordance with 4.6.6 at the conclusion of exposure.

4.6.37.1 Temperature life with contact loading (series 2, classes L (at 200°C) (392°F), D, N, T, W and Z (at 175°C) (347°F)). Connectors with removable contacts shall have one mating pair of contacts removed and replaced with contacts crimped to steel core copper wire (copperweld or equivalent) of the appropriate size. The axial location of these contacts shall be measured for conformance with the applicable dimensions shown on figure 5 and a load of 2 pounds (.907 kg) applied to seat the contact back against the retention device. The connector shall then be mounted in a fixture as shown on figure 14. A weight equal to 50 percent of the axial load specified in table XI for the applicable contact size shall be suspended freely from each steel core wire. A current of 100 ± 10 milliamperes supplied from a 10.0 Vdc maximum power source shall be applied to the test contacts and a suitable instrument shall be used to monitor the circuit for discontinuity in excess of one microsecond. The connector mounted as shown on figure 13 shall then be subjected to the temperature life test of 4.6.37. After the connectors return to ambient temperature, they shall be unmated and the contact locations remeasured (see figure 5) with 2 pounds (.907 kg) axial load applied to seat the contact back against the retention device. The tested contacts shall then be replaced with unwired contacts and sealing plugs, and those cavities shall be exempted from subsequent testing.

4.6.38 Ozone exposure (series 2) (see 3.6.38). Unmated, wired connectors shall be tested in accordance with test procedure EIA-364-14.

4.6.39 Shell-to-shell conductivity (series 2, except class A) (see 3.6.39). The dc resistance of the wired, mated, assembled connectors shall be measured from a point on the rear accessory thread of the plug to the mounting flange of the receptacle, or the rear thread of a cable connecting receptacle. The point of measurement on the square flange receptacle shall be adjacent to the mounting holes and adjacent to the O-ring on the front or mounting side of the flange for the single hole amount receptacle. The dc resistance shall not exceed the values specified in 3.6.39 when measured by the voltmeter-ammeter method. The applied potential shall be 1.5 Vdc maximum. A resistance shall be inserted in the circuit to limit the current to 1 ± .01 ampere. Probes with spherical ends of .05 inch (1.27 millimeter) minimum radius shall be used to make the voltage measurements on the connectors. The probes shall not puncture or otherwise damage the connector finish.

4.6.40 Insert grommet bonding (series 2, classes D, L, T, W and Z) (see 3.6.40). The insert assemblies shall be placed in a circulating air oven for a minimum period of 100 hours. The ambient temperature of the air circulating past the assemblies shall be 200º +3º -0ºC (392º +5º -0ºF) for class L, and 175º ± 3°C (347º +5º -0º F) for classes D, T, W and Z. At the end of this conditioning period the bonded assemblies shall be cooled to room temperature and the resilient grommets and interfacial seal shall be pulled or torn from the hard dielectric disk. The assemblies shall meet the requirements of 3.6.40.

4.6.41 External bending moment (series 2, classes D, L, T, W and Z) (see 3.6.41). The receptacle connector shall be mounted as in normal service to a rigid panel. Before mating the plug connector to the receptacle, an adapter or test torque arm shall be attached as shown on figure 9. After mating the plug and receptacle connectors, the distance “L” from the point of load application “P” shall then be determined as the bending moment listed in table XIII divided by the level arm “L”. This load shall be applied at a rate of approximately 10 pounds per second until the required load is achieved. The load so applied shall be held for a period of 1 minute after which the load shall be released. Continuity of the contacts shall be



Source: https://assist.dla.mil -- Downloaded: 2016-11-16T06:09Z
Check the source to verify that this is the current version before use.

monitored during the test. The test circuit used to monitor this test shall be capable of detecting any discontinuity of 1 microsecond or greater.

4.6.42 Pin contact stability (series 2, classes D, L, T, W and Z) (see 3.6.42). The unmated connectors shall have 10 percent (but not less than one) of their pin contacts subjected to this test. Gage pins shall be used to measure displacement. The gage pins shall be in accordance with MS3461. The connector shall be held in a holding device. A force of 3 pounds (1.36 kg) shall be applied to the exposed rod as shown on figure 10. The rate of load application shall not exceed one inch per minute. The total pin tip displacement shall be measured as shown on figure 10.

4.6.43 RFI shielding (series 2, RFI plugs only, except class A) (see 3.6.43). The RFI shielding effectiveness of mated connectors with RFI backshells shall be measured in a triaxial radio frequency leakage fixture. The RFI leakage from the conductor inside the connector in the inner coaxial line into the outer coaxial line shall be measured at the frequencies specified in table XV within a frequency accuracy of ± 5 percent. The level of detected signal power shall be indicated by a tunable radio frequency field intensity meter isolated from the test circuit by a 10 dB pad. Care shall be taken to ensure that the signal is a result of RFI leakage from within the mated connector and not due to a faulty termination inside the fixture. All terminations inside the fixture, whether to the RFI backshells or between internal conductors, shall have a leakage at least 10 dB less than the test requirement. The test arrangement shall be as shown on figure 11 and figure 12. The signal source shall be set to the desired frequency. The signal shall be fed through a 10 dB isolation pad to a parallel circuit consisting of a coaxial switch (double pole, double throw or DPDT) so connected that the signal can be manually or electronically fed alternately to the fixture and to a variable 100 dB reference attenuator. The attenuator shall be adjustable in 1 dB steps and calibrated to ± 3 dB.

a. The inserts may be removed from the connectors under test or the contacts removed and a hole drilled through the inserts to accommodate a center conductor of suitable geometry to provide a good 50 ohm impedance match with the ID of the mated connector shells and RFI backshells. Tapered transitions may be used to provide a means of changing diameters without introducing significant discontinuities in the line. The maximum VSWR in the inner coaxial line shall be 1.5. The outer shall of the test fixture shall be so constructed as to provide a good 50 ohm impedance match with the OD of the mated connector shells, coupling ring and RFI backshells. The maximum VSWR of the outer coaxial line shall be 1.5.

b. A sliding circumferential short shall be positioned behind the connector on the signal input end of the fixture to provide for tuning the outer coaxial line for maximum output at each test frequency. The allowable travel of this short shall be greater than ½ wave length at the lowest test frequency or 1.5 meters minimum for 100 MHz. The inner coaxial line shall be terminated in a fixed 50 ohm load impedance behind the connector at the output end of the fixture.

c. The connectors used to couple together the various elements of the test system shall be of a low leakage type which have a nominal impedance of 50 ohms, a VSWR of less than 1.5, and a minimum leakage attenuation of 100 dB. The output impedance of the signal source and the input impedance of the detector shall be nominally 50 ohms with a maximum VSWR of 1.5. the input and output VSWR of the standard attenuator shall be less than 1.5 in the 20 to 100 dB range.

d. The relative signal level in the variable attenuator shall be equaled to that through the leakage fixture by adjusting the attenuator. The signal loss in the fixture can then be read from the setting on the variable attenuator.



Source: https://assist.dla.mil -- Downloaded: 2016-11-16T06:09Z
Check the source to verify that this is the current version before use.

4.6.44 RFI finger spring force (series 2, classes D, L, T, W and Z, except class A) (see 3.6.44). RFI plugs shall be completely mated and unmated with counterpart receptacles less bayonet pins and inserts. On the initial mating and unmating the axial forces necessary to engage and separate shall be within the values listed in table XVI.

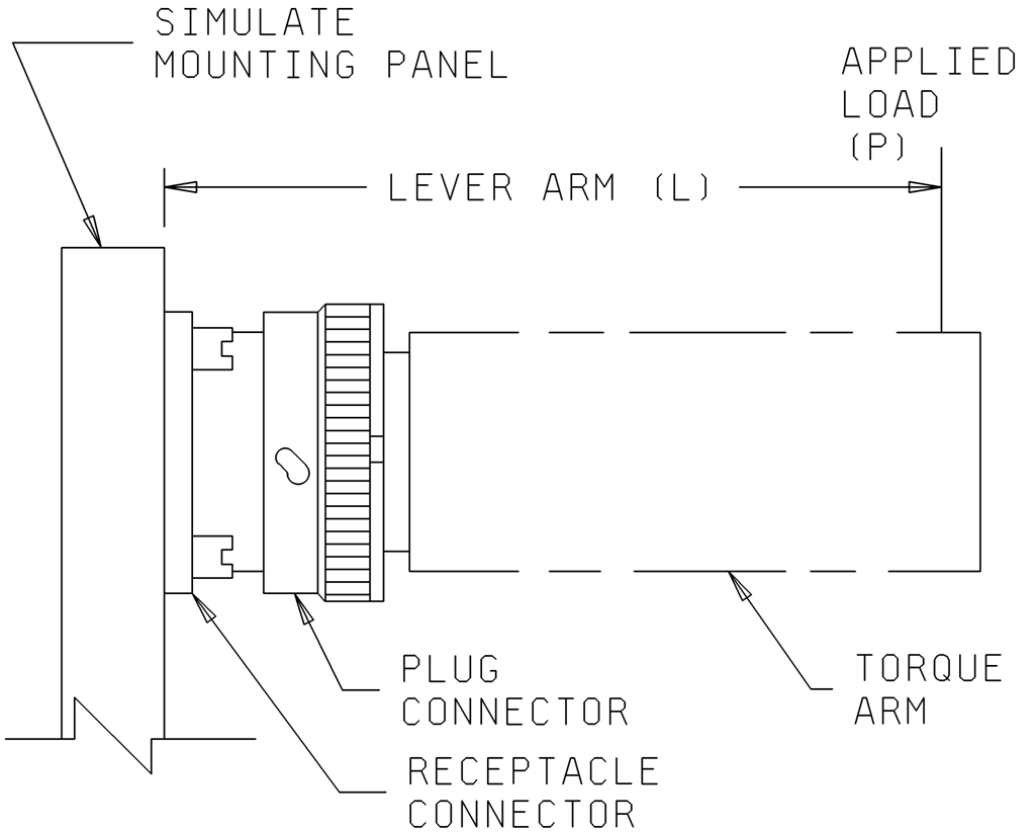


FIGURE 9. External bending moment test setup.



Source: https://assist.dla.mil -- Downloaded: 2016-11-16T06:09Z
Check the source to verify that this is the current version before use.

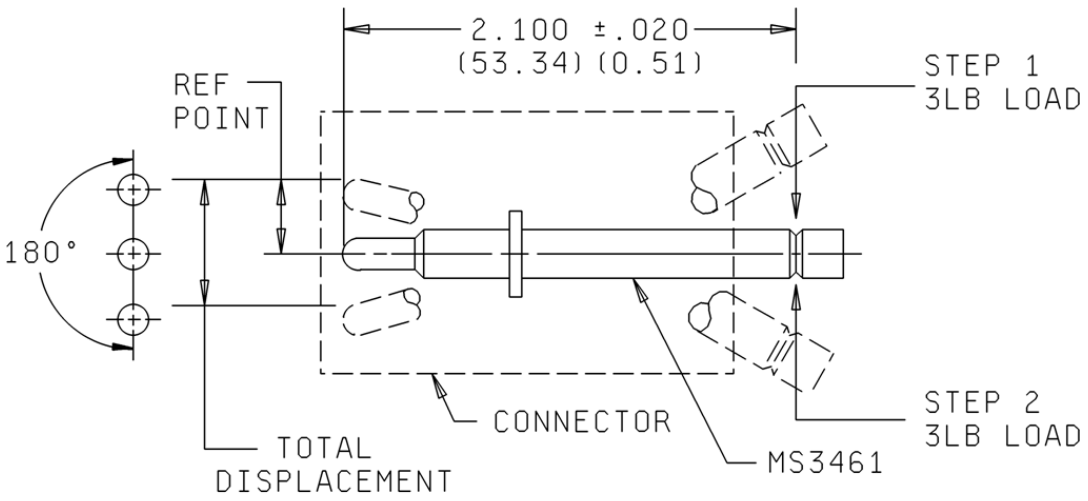


Step 1 – Apply load to determine reference point.
Step 2 – Apply load in opposite direction (180°) and measure total deflection.

NOTES:
1. Dimensions are in inches.
2. Metric equivalents are given for information only.

FIGURE 10. Pin contact stability test.

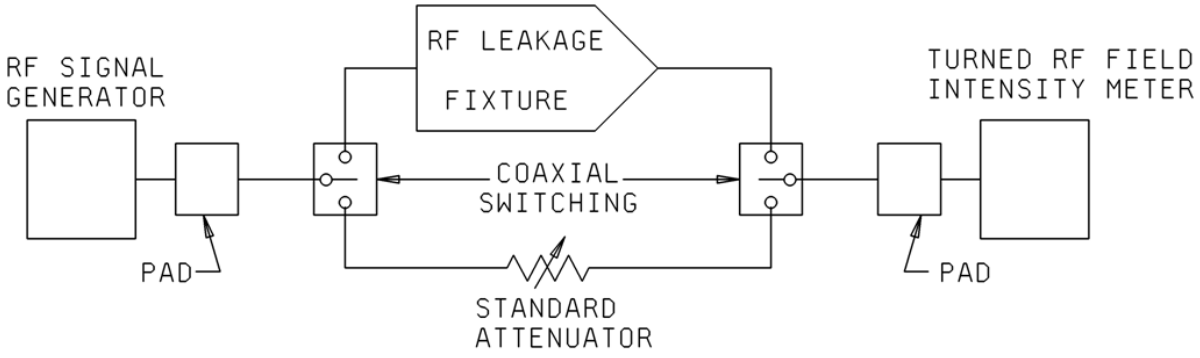


FIGURE 11. Test system for RFI leakage test.



Source: https://assist.dla.mil -- Downloaded: 2016-11-16T06:09Z
Check the source to verify that this is the current version before use.

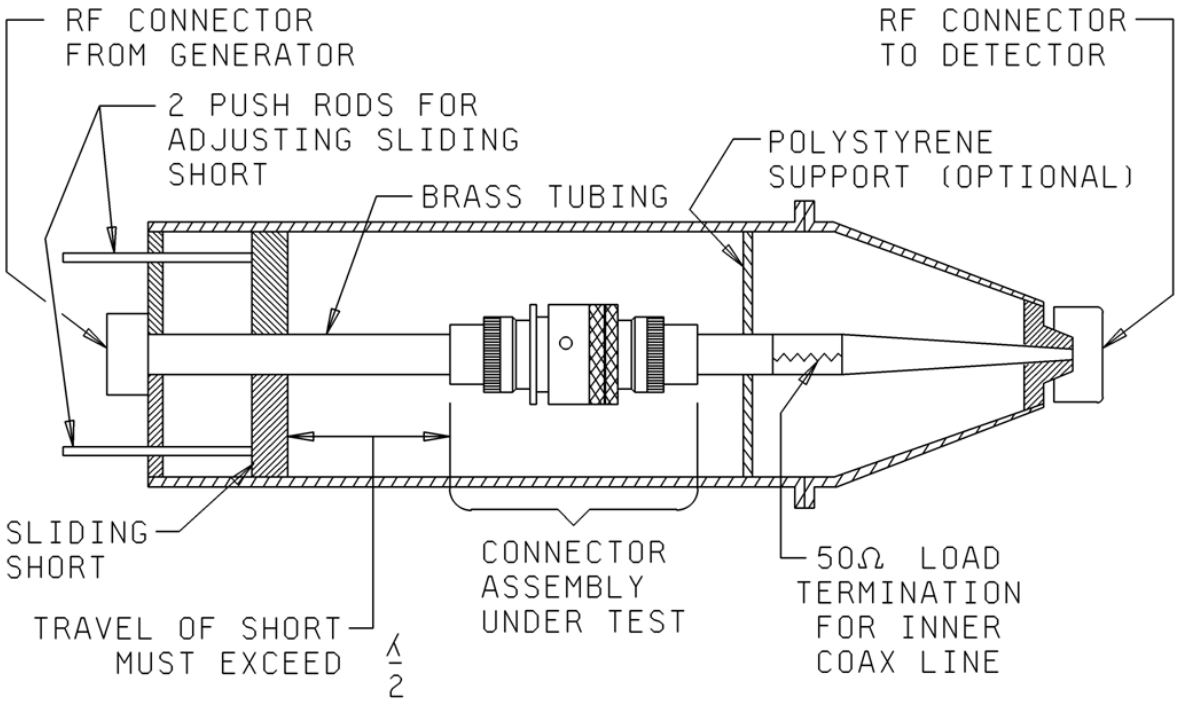


FIGURE 12. RFI leakage test fixture.

4.6.45 Insertion and removal tool abuse (series 2, classes D, L, N, T, W and Z) (see 3.6.45). Steps a, b, c, and d shall be performed. Separate groups of 5 connect cavities each shall be used for each step.

a. Removal tool – The tool shall be inserted as if to remove a contact and a total of 3 pounds (1.36 kg) axial load shall be applied. With the force applied, the tool shall be rotated 180° and then removed, also removing the contact. The contact shall be reinserted. These steps shall be repeated three times on each of the five contacts selected.
b. Insertion tool – The contact shall first be removed. With the insertion end of the tool, insert the contact and continue to press until an axial load of 3 pounds (1.36 kg) is applied. With the force applied, the tool shall be rotated 180° and then removed. These steps shall be repeated three times on each of the five contacts selected.
c. Insertion tool – The contact shall first be removed. With the insertion end of the tool, the contact shall be inserted and an axial load of 10 pounds (4.53 kg) applied to the tool. These steps shall be performed only once on each of the five contacts selected. A new tool shall be used for each contact.
d. Removal tool – The tool shall be inserted as if-to remove a contact and a total of 10 pounds (4.53 kg) axial load shall be applied. The tool shall then be removed, also removing the contact. These steps shall be performed only once on each of the five contacts selected. A new tool shall be used for each contact.



Source: https://assist.dla.mil -- Downloaded: 2016-11-16T06:09Z
Check the source to verify that this is the current version before use.

4.6.46 Contact walk-out (series 2, classes D, L, N, T, W and Z) (see 3.6.46). Two contacts in each plug and receptacle shall be tested. The contacts shall be crimped to stranded steel cable of an appropriate size and installed in the connector. The unmated connector shall be mounted in a test fixture as shown on figure 14. A 3 pound (1.36 kg) load shall be applied to the cable. One 360° rotation of the fixture with the connector mounted shall constitute one cycle. The connector shall be subjected to 100 cycles at a rate of 10 to 20 cycles per minute.

4.6.47 Accessory thread strength (series 2, classes D, L, T, W and Z) (see 3.6.47). The mated connector shall be mounted as in normal service to a rigid panel. The torque wrench shall be attached as shown on figure 13. After mating the plug and receptacle connectors, a torque shall be applied to the accessory end of the plug and receptacle connectors as shown on figure 15, a torque shall be applied to the accessory end of the plug at a rate of approximately 10 pounds (4.53 kg) per second until the required torque is achieved (see table XXX). The load so applied shall be held for a period of 1 minute after which the load shall be released. The test shall be repeated on the accessory end of the receptacle. The connectors shall then be unmated and inspected to 3X magnification for damage or breakage.

TABLE XXX. Accessory thread strength.

| Shell size | Minimum torque, Inch-pound (Newton meters) |
|---|---|
| 8 | 75 (8.47 N-m) |
| 10 | 100 (11.30 N-m) |
| 12 | 140 (15.82 N-m) |
| 14 | 150 (16.95 N-m) |
| 16 | 150 (16.95 N-m) |
| 18 | 150 (16.95 N-m) |
| 20 | 175 (19.77 N-m) |
| 22 | 175 (19.77 N-m) |
| 24 | 175 (19.77 N-m) |

4.6.48 Magnetic permeability (see 3.3.3). The wired, assembled, and fully mated connectors shall be measured for relative permeability with an indicator in accordance with ASTM A342/A342M.

4.6.49 Final examination of product. The marking on connectors and accessories shall be legible after all tests specified in table XVIII, table XIX, table XX and table XXI.

4.6.50 Impact (drop) (see 3.6.48). The connector shall be wired as intended for normal service, complete with accessories and tested in accordance with test procedure EIA 364-42 at a drop height of 4 feet, service class, light with a total of eight drops.

4.6.51 Finish thickness (series 1 solder contacts) (see 3.6.49).

4.6.51.1 Overall finish (see 3.3.5.1.1). Minimum finish thickness shall be measured in accordance with ASTM B488. Measurements shall be made on the external surfaces of the contact body at the locations shown on figure 16.

4.6.51.2 Localized finish (see 3.3.5.1.2). Minimum finish thickness shall be measured in accordance with ASTM B488 . Measurements shall be made at point A or D on figure 17, as applicable.



Source: https://assist.dla.mil -- Downloaded: 2016-11-16T06:09Z
Check the source to verify that this is the current version before use.

4.6.52 Humidity - temperature cycling (series 1, localized gold finish contacts only (see 3.6.50). Wired mated contacts shall meet the requirements of 3.6.49 when tested in accordance with test procedure EIA-364-31, method IV, test condition A. Current applied to contacts during exposure shall be 100 ±10 milliamps.

4.6.53 Contact finish. Contact finish shall be measured by any method which will give results within ±10% of the true finish thickness (see 3.3.5 and 4.6.51.2).

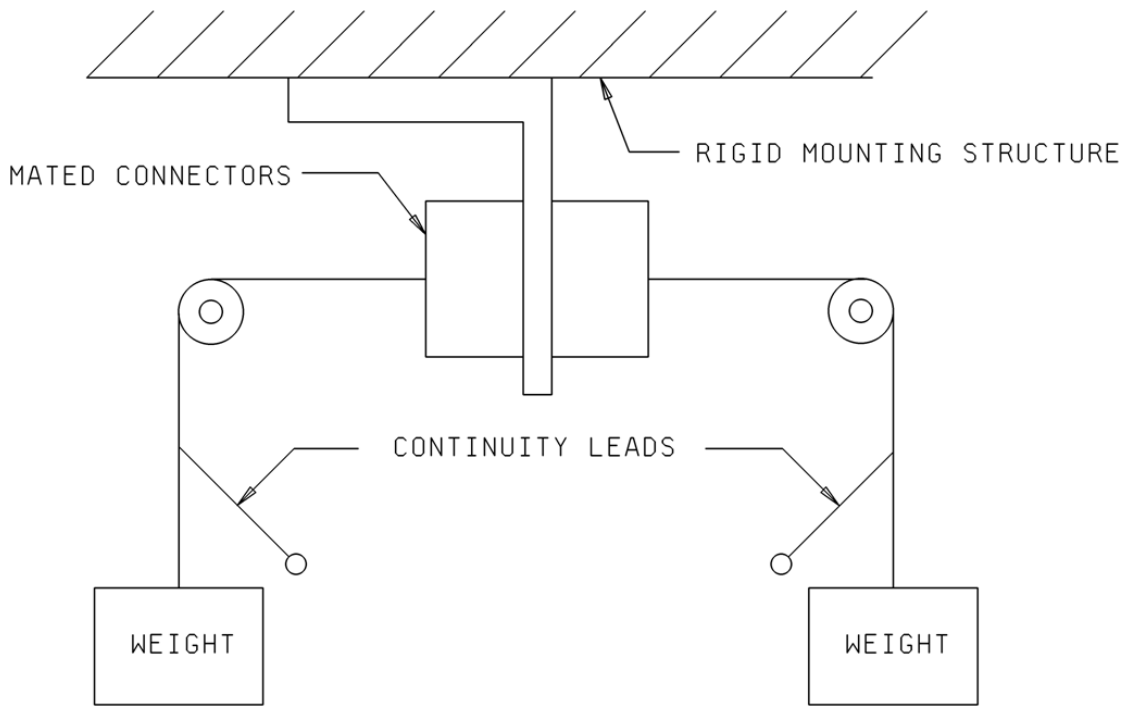


FIGURE 13. Temperature life with contact retention.



Source: https://assist.dla.mil -- Downloaded: 2016-11-16T06:09Z
Check the source to verify that this is the current version before use.

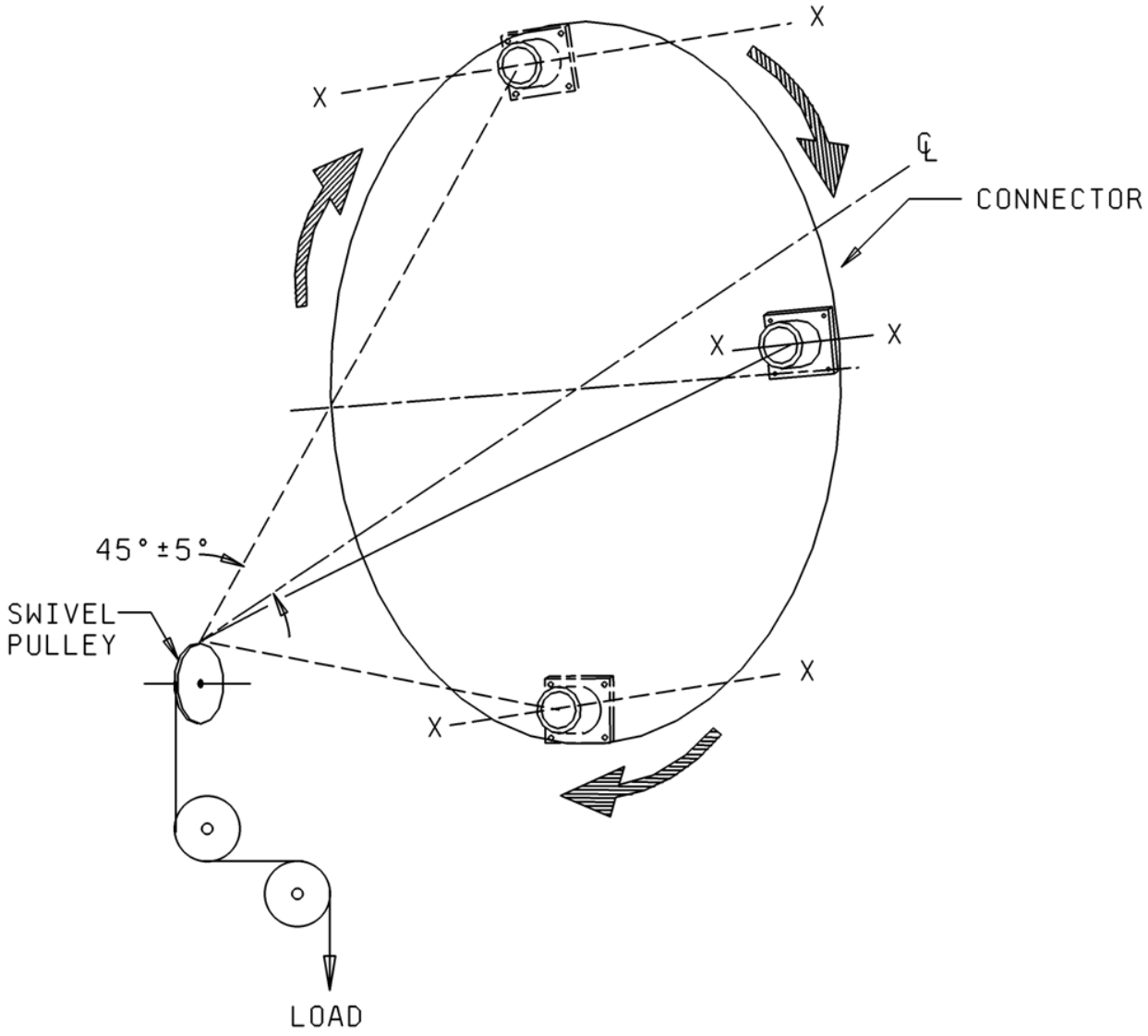


NOTE: Connector axis (ref X-X) to remain constant during rotation.

FIGURE 14. Contact walk-out.



Source: https://assist.dla.mil -- Downloaded: 2016-11-16T06:09Z
Check the source to verify that this is the current version before use.

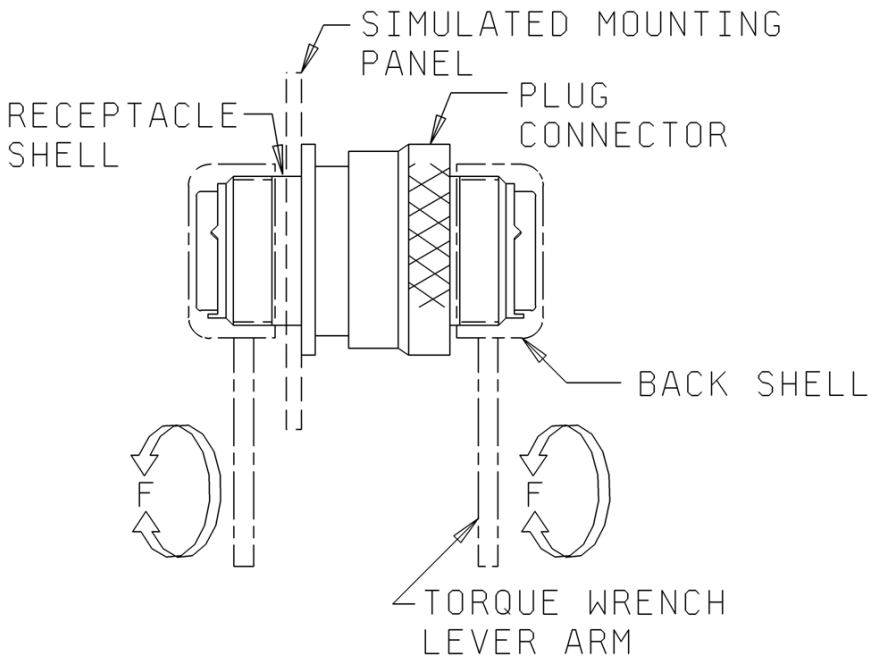


FIGURE 15. Rear accessory thread torque test setup.

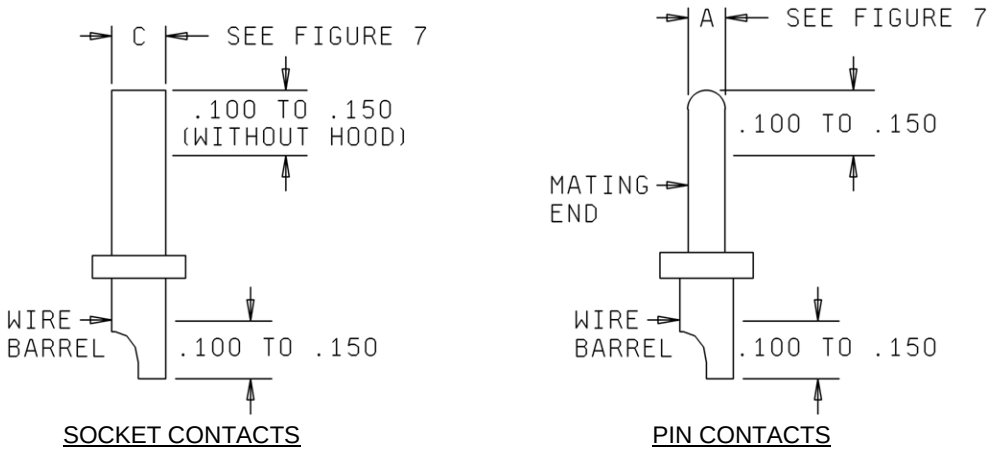


| Inches | mm |
|---|---|
| .100 | 2.54 |
| .150 | 3.81 |

NOTES:
1. Dimensions are in inches.
2. Metric equivalents are given for information only.

FIGURE 16. Plating thickness measurement – overall finish (series I, solder).



Source: https://assist.dla.mil -- Downloaded: 2016-11-16T06:09Z
Check the source to verify that this is the current version before use.

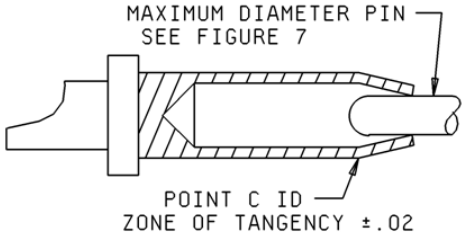


SOCKET CONTACTS WITH INTEGRAL PRESSURE MEMBER

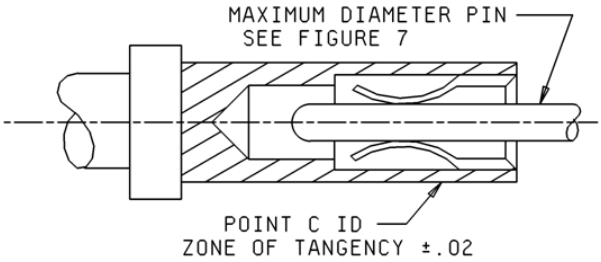


SOCKET CONTACT WITH SEPARATE PRESSURE MEMBER AS PRIMARY CURRENT CARRYING INTERFACE

FIGURE 17. Plating thickness measurement - localized finish (series 1, solder).

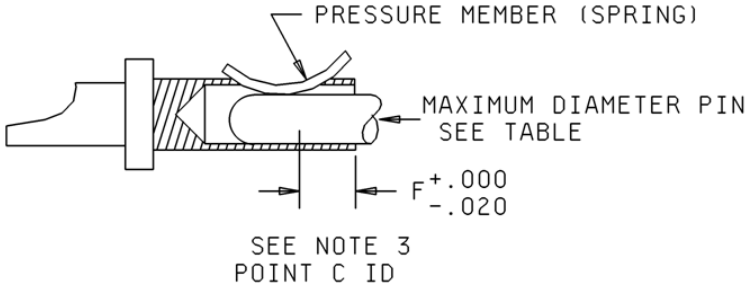


| Inches | mm |
|---|---|
| .02 | 0.5 |

SOCKET CONTACT WITH SEPARATE PRESSURE MEMBERS

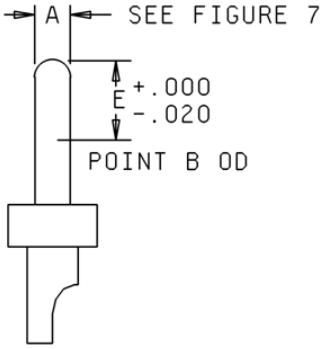


PIN CONTACTS

NOTES:
1 Dimensions are in inches.
2. Metric equivalents are given for information only.
3. F = .290 inches (7.37 mm) minimum and E = .290 inches (7.37 mm) minimum; F equals length of maximum electrical contact (wiping) area +.000, -.020 inches (0.51 mm). Maximum wipe shall be equal to maximum E of mating pin engagement minus the spherical radius.

FIGURE 17. Plating thickness measurement - localized finish (series 1, solder) – Continued.



Source: https://assist.dla.mil -- Downloaded: 2016-11-16T06:09Z
Check the source to verify that this is the current version before use.

## 5. PACKAGING

5.1 Packaging. For acquisition purposes, the packaging requirements shall be as specified in the contract or order (see 6.2). When packaging of materiel is to be performed by DoD or in-house contractor personnel, these personnel need to contact the responsible packaging activity to ascertain packaging requirements. Packaging requirements are maintained by the Inventory Control Point's packaging activities within the Military Service or Defense Agency, or within the military service's system commands. Packaging data retrieval is available from the managing Military Department's or Defense Agency's automated packaging files, CD-ROM products, or by contacting the responsible packaging activity.

## 6. NOTES

(This section contains information of a general or explanatory nature that may be helpful, but is not mandatory.)

6.1 Intended use (series 1). The various classes and types of connectors are intended for application as follows:

a. Classes E, F, J, and P connectors are intended for use in environment-resisting applications where the operating temperature range of -55º to 125ºC (-67º to 257ºF) is experienced. Crimp contact connectors have the additional advantage of possessing removable crimp-type contacts. Class J connectors are intended for use with light-weight, single-jacketed cable.
b. Class H receptacles are intended for use in applications wherein pressures must be contained by the connectors across the walls or panels on which they are mounted.
c. Crimp contact connectors should have contacts installed in all positions when the connector is wired. Sealing plugs should be installed in the grommet holes when no wire is attached to the contact in grommet sealed connectors.
d. The potting form should remain with the connector after potting.
e. Counterpart solder and crimp contact connectors are intended to the intermateable. Moisture resistance capability is then reduced to that of the solder contact connector.
f. If air leakage requirements are critical, a resilient insert, solder contact receptacle, a through bulkhead receptacle, or class H receptacle should be used, or the connector should be potted.
g. For finished wire diameters less than specified in table II, shrink-fit sleeving should be used over the wire.
h. Where two or more wires are used in a solder cup or wire barrel, grommet sealing is not obtainable. Wires should be potted if sealing is required.
i. Connectors are available with finishes D, T, W and Z for corrosion protection.

6.2 Intended use (series 2).

a. Connector backshells must be installed to meet the specified moisture sealing requirements.
b. Class A connectors are intended for use in application where 200ºC temperature, grommet seal, and nonconductive finish are required.
c. Class L connectors are intended for use in environment resisting applications at 200ºC temperature and are fluid resistant. These connectors have wire sealing grommets.
d. Class H and N receptacles are intended for use in applications wherein pressure must be contained by the connectors across walls or panels on which they are mounted. They have fluid resistant insert face seals. In addition, class N receptacles have crimp type terminations.
e. Mechanical strain reliefs are intended for use where a saddle type clamp is desired.



Source: https://assist.dla.mil -- Downloaded: 2016-11-16T06:09Z
Check the source to verify that this is the current version before use.

f. Shielded contacts are intended for use with shielded and jacketed single conductor cables, and may be used with certain coaxial cables when impedance matching is not required. Shielded contacts are not furnished with connectors, and must be ordered separately when required. Shielded contacts will not intermate with standard size 12 contacts or with series 1 shielded contacts. It is the user's responsibility to assure mating contact compatibility at time of contact installation.
g. RFI backshell and grounding fingers on plug are available in class L and provide RFI shielding.
h. Classes D, T, W and Z connectors are intended for use in salt spray environments providing a corrosive resistant shell, conductive finish, and fluid resistance at 175°C (347ºF) service temperature.

6.3 Acquisition requirements. Acquisition documents should specify the following:

a. Title, number, and date of the specification.
b. Title, number, and date of the applicable MS standard and the complete PIN.
c. For indirect shipment, these connectors may be furnished without contacts, grommet sealing plugs or insertion and removal tools (see 3.4.1, 3.4.1.2.3, 3.4.1.4.3, and 3.4.5.7).
d. Special finish.
e. Shielded contacts.

6.3.1 Accessory hardware. Accessory hardware, such as dust covers or mounting hardware especially designed for these connectors, is shown on the separate drawings.

6.3.2 Crimp contacts. Crimp contacts may be ordered in bulk in accordance with SAE-AS39029.

6.4 Definitions.

6.4.1 Alternate insert position. The inner position illustrated in accordance with MIL-STD-1669 should be termed "normal" position. Where possible, the order of design selection of insert position should be "normal" first. This should be followed by the alternate positions as needed in the order in which they are presented in the tabulation included in the detail document covering the arrangement.

6.4.2 Backshell. The backshell consists of an accessory nut end follower. The accessory nut is captivated to the follower and is used to attach the backshell to the connector (except the RFI backshell).

6.4.3 Overall finish. A finish having a specified minimum thickness applied (i.e., barrel plating techniques, non-selective types, etc.) on all external plating surface diameters except for corners, which assures the specified performance of the contact.

6.5 Qualification. With respect to products requiring qualification, awards will be made only for products which are, at the time of award of contract, qualified for inclusion in the Qualified Products List QPL No. 26482, whether or not such products have actually been so listed by that date. The attention of the contractors is called to these requirements, and manufacturers are urged to arrange to have products that they propose to offer to the Federal Government tested for qualification in order that they may be eligible to be awarded contracts or orders for the products covered by this specification. Information pertaining to qualification of products may be obtained from Defense Supply Center Columbus, ATTN: DSCC-VQ, P.O. Box 3990, Columbus, Ohio 43218-3990 or email vq.chief@dla.mil. An online listing of products qualified to this specification may be found in the Qualified Products Database (QPD) at https://assist.daps.dla.mil.



Source: https://assist.dla.mil -- Downloaded: 2016-11-16T06:09Z
Check the source to verify that this is the current version before use.

6.5.1 Copies of "Provisions Governing Qualification SD-6". Copies of the "Provisions Governing Qualification SD6" may be found online at https://assist.daps.dla.mil.

6.5.2 Application information. The information shown on figure 18 is for guidance in design and application. The flashover voltages shown on figure 18 do not include corona or any safety factor.

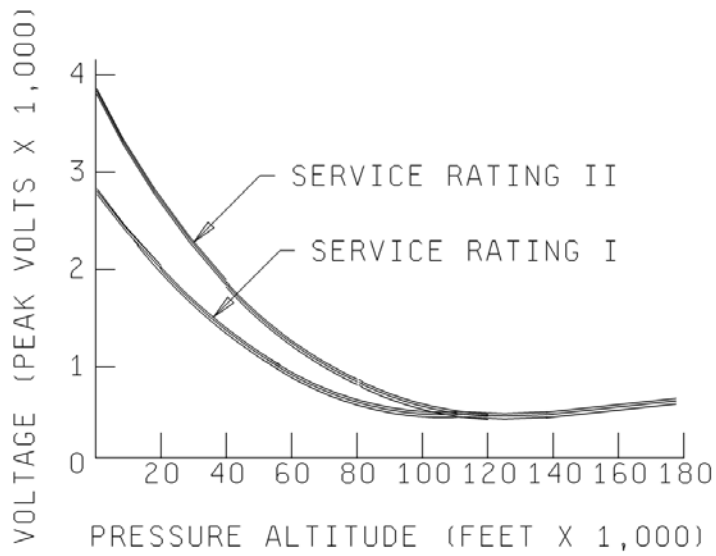


FIGURE 18. Typical flashover voltage vs altitude on unmated miniature connectors (see 6.6).

6.6 Intermetallic contact. The finishing of metallic areas to be placed in intimate contact by assembly presents a special problem, since intermetallic contact of dissimilar metals results in electrolytic couples which promote corrosion through galvanic action. To provide the required corrosion protection, intermetallic couples are restricted to those specified in table XXXI. Table XXXI shows metals and alloys (or plates) by groups which have common electromotive forces (EMF) within 0.05 volt when coupled with a saturated calomel electrode in sea-water at room ambient temperatures. All members of a group are considered as completely compatible, one with the other. Compatible couples between groups have been specified in table XXXI based on a potential difference of 0.25 volt maximum. To simplify any arithmetic involved, table XXXI shows, in addition to EMF against a calomel electrode, a derived "anodic index" with group 1 (gold, etc) as 0 and group 18 (magnesium, etc) as 175. Subtraction of a lower group anodic index gives the EMF difference in hundredths of a volt.

6.6.1 Groups. Table XXXI sets up 18 primary groups. It may be noted that neither the metallurgical similarity or dissimilarity of metals is the parameter for selection of compatible couples. All members within a group, regardless of metallurgical similarity, are considered inherently non-susceptible to galvanic action, when coupled with any member within the group; for example, such dissimilar metals as platinum and gold. Similarly, such basically dissimilar alloys as austenitic stainless steel, silver-solder, and low brass (all members of group 5) are inherently non-susceptible when coupled together.

6.6.2 Selection of compatible couples. Proper selection of metals in the design of equipment will result in fewer intermetallic contact problems. For example, for sheltered exposure, neither silver nor tin require protective finishes. However, since silver has an anodic index of 15 and tin 65, the EMF generated as a couple is 0.50 volt, which is not allowable as specified in table XXXI. In this case, other metals or plates will be required. It should be noted that, in intermetallic couples, the member with the higher anodic index is anodic to the member with the lower anodic index and will be susceptible to corrosion in the presence



Source: https://assist.dla.mil -- Downloaded: 2016-11-16T06:09Z
Check the source to verify that this is the current version before use.

of an electrolytic medium. If the surface area of the cathodic part is significantly greater than that of the anodic part, the corrosive attack on the contact area of the anodic part may be greatly intensified. Material selection for intermetallic contact parts, therefore; should establish the smaller part as the cathodic member of the couple, whenever practicable.

6.6.3 Plating. When base metals intended for intermetallic contact form couples not allowed by table XXXI, they are to be plated with those metals which will reduce the potential difference to that allowed as specified in table XXXI.

6.7 Patent notice. The Government has a royalty-free license under the following listed patents for the benefit of manufacturers of the item either for the Government or for use in equipment to be delivered to the Government.

U. S. patent numbers
2,563,712
2,984,811.
Patents 2,563,712 and 2,984,811.

6.8 Military unique statement. This connector is military unique because it is an environment resisting, miniature, quick disconnect circular connector, capable of operating in high shock, high vibration and high temperature environments as well as meeting the salt spray corrosion requirements of this specification.

TABLE XXXI. Compatible couples (see 6.7). 1/

| Group no. | Metallurgical category | EMF (volt) | Anodic Index (0, 01 v) | Compatible couples (Group no.) |
|---|---|---|---|---|
| 1 | Gold, solid and plated; gold-platinum alloys/ wrought platinum (most cathodic) | +0.15 | 0 | 1, 2, 3 |
| 2 | Rhodium plated on silver-plated copper | +0.05 | 10 | 2, 3, 4, 5 |
| 3 | Silver, solid or plated; high silver alloys | 0 | 0 | 3, 4, 5, 6 |
| 4 | Nickel, solid or plated; monel metal, high nickel-copper alloys | -0.15 | 30 | 4, 5, 6, 7, 8 |
| 5 | Copper, solid or plated; low brasses or bronzes; silver solder; German silver; high copper-nickel alloys; nickel-chromium alloys; austenitic corrosion-resistant steels | -0.20 | 35 | 5, 6, 7, 8, 9 |
| 6 | Commercial yellow brasses and bronzes. | -0.25 | 40 | 6, 7, 8, 9, 10 |
| 7 | High brasses and bronzes; naval brass; Muntz metal | -0.30 | 45 | 7, 8, 9, 10, 11 |
| 8 | 18 percent chromium type corrosion-resistant steels | -0.35 | 50 | 8, 9, 10, 11, 12 |
| 9 | Chromium, plated; tin, plated; 12 percent chromium type corrosion-resistant steels | -0.45 | 60 | 9, 10, 11, 12, 13 |
| 10 | Tin-plate; terneplate; tin-lead solder | -0.50 | 65 | 10, 11, 12, 13, 14 |
| 11 | Lead, solid or plated; high lead alloys | -0.55 | 70 | 11, 12, 13, 14, 15 |
| 12 | Aluminum, wrought alloys of the duralumin type | -0.60 | 75 | 12, 13, 14, 15 |



Source: https://assist.dla.mil -- Downloaded: 2016-11-16T06:09Z
Check the source to verify that this is the current version before use.

TABLE XXXI. Compatible couples (see 6.7) - Continued. 1/

| Group no. | Metallurgical category | EMF (volt) | Anodic Index (0, 01 v) | Compatible couples (Group no.) |
|---|---|---|---|---|
| 13 | Iron, wrought, gray, or malleable; plain carbon and low alloy steels, Armco iron | -0.70 | 85 | 13, 14, 15 |
| 14 | Aluminum, wrought alloys other than duralumin type; aluminum, case alloys of the silicon type | -0.75 | 90 | 14, 15 |
| 15 | Aluminum, cast alloys other than silicon type; cadmium, plated and chromated | -0.80 | 95 | 15, 16 |
| 16 | Hot-dip-zinc plate; galvanized steel | -1.05 | 120 | 16, 17 |
| 17 | Zinc, wrought; zinc-base die-casting alloys; zinc, plated | -1.10 | 125 | |
| 18 | Magnesium and magnesium-base alloys, cast or wrought (most anodic) | -1.60 | 175 | |

1/ Compatible couples – potential difference of 0.25 volt maximum between groups.

6.9 Environmentally preferable material. Environmentally preferable materials should be used to the maximum extent possible to meet the requirements of this specification. As of the dating of this document, the U.S. Environmentally Protection Agency (EPA) is focusing efforts on reducing 31 priority chemicals. The list of chemicals is available on their web site http://www.epa.gov/epaoswer/hazwaste/minimize/chemlist.htm. Further information is available at the following EPA site: http://www.epa.gov/epaoswer/hazwaste/minimize/. Included in the EPA list of 31 priority chemicals are cadmium, lead, and mercury. Use of the materials on the list should be minimized or eliminated unless needed to meet the requirements specified herein (see section 3).

6.10 Guidance on use of alternative parts with less hazardous or nonhazardous materials. This specification provides for a number of alternative plating materials via the PIN. Users should select the PIN with the least hazardous material that meets the form, fit and function requirements of their application.

6.11 Subject term (keyword) listing.

Contact
Coupling, bayonet
Crimp
Front release
Jam-nut
Localized finish
Overall finish
Rear release
Solder



Source: https://assist.dla.mil -- Downloaded: 2016-11-16T06:09Z
Check the source to verify that this is the current version before use.

6.12 Tin whisker growth. The use of alloys with tin content greater than 97 percent, by mass, may exhibit tin whisker growth problems after manufacture. Tin whiskers may occur anytime from a day to years after manufacture and can develop under typical operating conditions, on products that use such materials. Conformal coatings applied over top of a whisker-prone surface will not prevent the formation of tin whiskers. Alloys of 3 percent lead, by mass, have shown to inhibit the growth of tin whiskers. For additional information on this matter, refer to ASTM-B545 (Standard Specification for Electrodeposited Coatings of Tin) (see 3.11).

6.13 Suppression data. See table XXXIII.

TABLE XXXIII. Cross reference. 1/

| MIL-DTL-83723 series I and MIL-DTL-26482 connectors cross reference table | | |
|---|---|---|
| MIL-DTL-83723 specification sheet no. | Class | Superseded by |
| 1 | R | MS3470L |
| 2 | R | MS3470L |
| 3 | R | MS3472L |
| 4 | R | MS3472L |
| 5 | R | MS3474L |
| 6 | R | MS3474L |
| 7 | R | MS3471L |
| 8 | R | MS3471L |
| 9 | H | MS3440H |
| 10 | H | MS3440H |
| 11 | H | MS3443H |
| 12 | H | MS3443H |
| 13 | R | MS3476L |
| 14 | R | MS3476L |
| 42 | R | MS3475L |
| 43 | R | MS3475L |

1/ Class R superseded by class L.

6.14 International Standardization Agreements. This specification implements NATO STANAG 7067 ED.2(2). When amendment, revision or cancellation of this specification is proposed, the preparing activity must coordinate the action with the U.S National Point of Contact for the international standardization agreement, as identified in the ASSIST database at: https://assist.daps.dla.mil.

6.15 Amendment notations. The margins of this specification are marked with vertical lines to indicate modifications generated by this amendment. This was done as a convenience only and the Government assumes no liability whatsoever for any inaccuracies in these notations. Bidders and contractors are cautioned to evaluate the requirements of this document based on the entire content irrespective of the marginal notations.



Source: https://assist.dla.mil -- Downloaded: 2016-11-16T06:09Z
Check the source to verify that this is the current version before use.

CONCLUDING MATERIAL

Custodians:
Army - CR
Navy - AS
Air Force - 85
DLA - CC

Review activities:
Army - AR, AV
Navy - EC, SH, TD
Air Force - 99

Preparing activity:
DLA - CC

(Project 5935-2007-156)

NOTE: The activities listed above were interested in this document as of the date of this document. Since organizations and responsibilities can change, you should verify the currency of the information above using the ASSIST Online database at https://assist.daps.dla.mil.



Source: https://assist.dla.mil -- Downloaded: 2016-11-16T06:09Z
Check the source to verify that this is the current version before use.