U.S. General Services Administration

Federal Specification for the Star-of-Life Ambulance

KKK-A-1822F
August 1, 2007

Source: https://assist.dla.mil -- Downloaded: 2016-12-11 08:17Z
Check the source to verify that this is the current version before use.

TABLE OF CONTENTS

1. **SCOPE, PURPOSE, AND CLASSIFICATION** 1
2. **APPLICABLE DOCUMENTS** 3
3. **REQUIREMENTS** 6
4. **QUALITY ASSURANCE PROVISIONS** 55
5. **DELIVERY** 58
6. **NOTES** 59

Table 1:
Emergency Lighting 24

Figure 1:
Certification & Payload Signage 62

Figure 2:
Payload Calculation Form 63

Figure 3:
12-Volt DC Electrical System 64

Figure 4:
125-Volt AC Electrical System 65

Figure 5:
Portable Equipment Battery Charging Circuit 66

Source: https://assist.dla.mil -- Downloaded: 2016-12-11T08:17Z
Check the source to verify that this is the current version before use.

1. Scope, Purpose, and Classification

1.1 SCOPE.

This specification identifies the minimum requirements for new automotive Emergency Medical Services (EMS) ambulances (except military field ambulances) built on Original Equipment Manufacturer's Chassis (OEM) that are prepared by the OEM for use as an ambulance.

The ambulances are front or rear wheel driven (4x2) and minimally warranted as specified in Section 6.

Refurbishing and remounted vehicles are not covered by this standard. This standard applies to new vehicles only.

By definition an ambulance is a vehicle used for emergency medical care and patient transport. This specification is for the construction of ambulances, not for vehicles intended for use as fire apparatus. National and international standards exist for automotive fire apparatus. These standards can be obtained from organizations such as the National Fire Protection Association (NFPA).

Section 3 of this specification contains:

- Optional configurations.
- A worksheet to assist the purchaser in developing their procurement requirements.

1.1.1 DEFINITION OF AMBULANCE.

The ambulance is defined as a vehicle used for emergency medical care that provides:

- A driver's compartment.
- A patient compartment to accommodate an emergency medical services provider (EMSP) and one patient located on the primary cot so positioned that the primary patient can be given intensive life-support during transit.
- Equipment and supplies for emergency care at the scene as well as during transport.
- Safety, comfort, and avoidance of aggravation of the patient's injury or illness.
- Two-way radio communication.
- Audible and Visual Traffic warning devices.

1.1.2 PURPOSE.

The purpose of this document is to describe ambulances that are authorized to display the "Star of Life" symbol. It establishes minimum specifications, performance parameters and essential criteria for the design of ambulances and to provide a practical degree of standardization. The object is to provide ambulances that are nationally recognized, properly constructed, easily maintained, and, when professionally staffed and provisioned, will function reliably in pre-hospital or other mobile emergency medical service.

Source: https://assist.dla.mil -- Downloaded: 2016-12-11T08:17Z
Check the source to verify that this is the current version before use.

1.1.3 "STAR OF LIFE" CERTIFICATION.

The final stage ambulance manufacturer (FSAM) shall furnish to a purchaser an authenticated certification and label stating that the ambulance and equipment comply with this specification and applicable change notices in effect on the date the ambulance is contracted for. FSAMs making this certification are permitted to use the "Star of Life" symbol to identify an ambulance as compliant with the Federal specifications for ambulances. Use of the symbol must be in accordance with the purpose and use criteria set forth in published guidelines (Document Number DOT HS 808 721, Rev. June 1995) by the National Highway Traffic Safety Administration, an operating administration of the U.S. Department of Transportation.

Source: https://assist.dla.mil -- Downloaded: 2016-12-11T08:17Z
Check the source to verify that this is the current version before use.

2. Applicable Documents

2.1 THE FOLLOWING STANDARDS AND REGULATIONS FORM A PART OF THIS SPECIFICATION, TO THE EXTENT SPECIFIED OR REQUIRED BY LAW. UNLESS A SPECIFIC ISSUE OF A STANDARD OR REGULATION IS IDENTIFIED, THE ISSUE IN EFFECT, ON THE DATE THE AMBULANCE IS CONTRACTED FOR, SHALL APPLY.

FEDERAL SPECIFICATIONS:
RR-C-901C — CYLINDERS, COMPRESSED GAS: HIGH PRESSURE, STEEL DOT 3AA AND ALUMINUM APPLICATIONS

FEDERAL STANDARDS:
Federal Standard No. 297 — Rustproofing of Commercial (Nontactical) Vehicles

MILITARY STANDARDS:
MIL-STD-461 Requirements for the Control of Electromagnetic Interference Characteristics of Subsystems and Equipment.
MIL-STD-1223 Non-tactical Wheeled Vehicles, Painting, Identification Marking, and Data Plate Standards.

LAWS AND REGULATIONS:
29 CFR 1910.1030: Blood borne Pathogens
29 CFR 1910.7 Definition and Requirements for a Nationally Recognized Testing Laboratory
21 CFR 820: Quality System Regulation
40 CFR 86: Control of Air Pollution from New Motor Vehicles and New Motor Vehicle Engines.
47 CFR, PART 90: Public Safety Radio Services (FCC)
49 CFR 393: Federal Motor Carrier Safety Regulations (FMCSR)
49 CFR 571: Federal Motor Vehicle Safety Standards (FMVSS)

2.2 OTHER PUBLICATIONS.

The following documents form a part of this specification to the extent specified. Unless a specific issue is identified, the issue in effect, on the date the ambulance is contracted for, shall apply.

THE TIRE AND RIM ASSOCIATION, INC.
Yearbook

NATIONAL FIRE PROTECTION ASSOCIATION
70 – National Electric Code
1901 – Standard for Automotive Fire Apparatus

Source: https://assist.dla.mil -- Downloaded: 2016-12-11T08:17Z
Check the source to verify that this is the current version before use.

SOCIETY OF AUTOMOTIVE ENGINEERS (SAE), INC., STANDARDS, AND RECOMMENDED PRACTICES:

J163 Low Tension Wiring and Cable Terminals and Splice Clips
J537 Storage Batteries
J541 Voltage Drop for Starting Motor Circuits
J553 Circuit Breakers
J561 Electrical Terminals, Eyelet, and Spade Type
J575 Tests for Motor Vehicle Lighting Devices & Components
J576 Plastic Materials, For Use In Optical Parts Such As Lenses and Reflectors of Motor Vehicle Lighting Devices
J578 Color Specification for Electric Signal Lighting Devices
J595 Flashing Warning Lamps for Authorized Emergency, Maintenance, and Service Vehicles
J638 Test Procedure and Ratings for Hot Water Heaters for Motor Vehicles
J639 Safety Practices for Mechanical Vapor Compression Refrigeration Equipment or Systems Used To Cool Passenger Compartment of Motor Vehicles
J689 Approach, Departure, and Ramp Break over Angles
J682 Rear Wheel Splash and Stone Throw Protection
J683 Tire Chain Clearance
J858 Electrical Terminals, Blade Type
J928 Electrical Terminals, Pin, and Receptacle Type
J994 Backup Alarms, Performance Test and Application
J1054 Warning Lamp, Alternating Flashers
J1127 Battery Cable
J1128 Low Tension Primary Cable
J1292 Automobile, Truck, Truck-Tractor, Trailer, and Motor Coach Wiring
J1349 Engine Power Test Code, Spark Ignition and Diesel
J1318 Strobe Warning Lights
J2498 Minimum Performance of the Warning Light System Used on Emergency Vehicles

NATIONAL TRUCK EQUIPMENT ASSOCIATION / AMD:

AMD STANDARD 001 – AMBULANCE BODY STRUCTURE STATIC LOAD TEST
AMD STANDARD 002 – BODY DOOR RETENTION COMPONENTS TEST
AMD STANDARD 003 – OXYGEN TANK RETENTION SYSTEM STATIC TEST
AMD STANDARD 004 – LITTER RETENTION SYSTEM STATIC TEST
AMD STANDARD 005 – 12-VOLT DC ELECTRICAL SYSTEM TEST
AMD STANDARD 006 – PATIENT COMPARTMENT SOUND LEVEL TEST
AMD STANDARD 007 – PATIENT COMPARTMENT CARBON MONOXIDE LEVEL TEST
AMD STANDARD 008 – PATIENT COMPARTMENT GRAB RAIL STATIC LOAD TEST
AMD STANDARD 009 – 125V AC ELECTRICAL SYSTEMS TEST
AMD STANDARD 010 – WATER SPRAY TEST
AMD STANDARD 011 – EQUIPMENT TEMPERATURE TEST
AMD STANDARD 012 – INTERIOR CLIMATE CONTROL TEST
AMD STANDARD 013 – WEIGHT DISTRIBUTION GUIDELINES
AMD STANDARD 014 – ENGINE COOLING SYSTEM TEST
AMD STANDARD 015 – AMBULANCE MAIN OXYGEN SYSTEM TEST
AMD STANDARD 016 – PATIENT COMPARTMENT LIGHTING LEVEL TEST
AMD STANDARD 017 – ROAD TEST

Source: https://assist.dla.mil -- Downloaded: 2016-12-11T08:17Z
Check the source to verify that this is the current version before use.

AMD STANDARD 018 – REAR STEP AND BUMPER STATIC LOAD TEST
AMD STANDARD 019 – MEASURING GUIDELINES: CABINETS & COMPARTMENTS
AMD STANDARD 020 – FLOOR DISTRIBUTED LOAD TEST
AMD STANDARD 021 – ASPIRATOR SYSTEM TEST, PRIMARY PATIENT
AMD STANDARD 022 – COLD ENGINE START TEST
AMD STANDARD 023 – SIREN PERFORMANCE TEST
AMD STANDARD 024 – PERIMETER ILLUMINATION TEST
AMD STANDARD 025 – MEASURING GUIDELINES: OCCUPANT HEAD CLEARANCE ZONES

AMERICAN COLLEGE OF EMERGENCY PHYSICIANS (ACEP):
Guidelines for Ambulance Equipment

AMERICAN SOCIETY FOR TESTING AND MATERIALS (ASTM) STANDARDS:

F 920	Standard Specification for Minimum Performance and Safety Requirements for Resuscitators Intended for Use with Humans
F 960	Standard Specification for Medical and Surgical Suction and Drainage Systems
D 4956	Standard Specification for Retroreflective Sheeting for Traffic Control
D6210	Standard Specification for Fully-Formulated Glycol Base Engine Coolant for Heavy-Duty Engines
B117	Standard Practice for Operating Salt Spray (Fog) Apparatus
IPC-610D	Acceptability of Electronic Assemblies

NATIONAL EMSC (EMERGENCY MEDICAL SERVICES FOR CHILDREN) RESOURCE ALLIANCE:
COMMITTEE ON AMBULANCE EQUIPMENT AND SUPPLIES
Guidelines for pediatric equipment and supplies for Basic and Advanced life support ambulances

AUTOMOTIVE MANUFACTURERS EQUIPMENT COMPLIANCE AGENCY(AMECA):
Approval of Motor Vehicle Safety Equipment (emergency lights and sirens)

AMERICAN NATIONAL STANDARDS INSTITUTE:
Z535.1 American National Standard for Safety Colors

For assistance in obtaining the referenced documents, contact the Department of Commerce, National Technical Information Service (NTIS).

2.3 ORDER OF PRECEDENCE.

In the event of a conflict between the text of this specification and the references cited, the text of this specification shall take precedence.

Source: https://assist.dla.mil -- Downloaded: 2016-12-11T08:17Z
Check the source to verify that this is the current version before use.

3. REQUIREMENTS

3.1 GENERAL VEHICULAR DESIGN, TYPES, AND CONFIGURATION.

3.1.1 DESIGN.

The ambulance and the allied equipment furnished under this specification shall be the OEM's current model year commercial vehicle of the Type and Configuration specified. The ambulance shall be complete with the operating accessories, as specified. The design of the vehicle and the specified equipment shall permit accessibility for servicing, replacement, and adjustment of component parts and accessories with minimum disturbance to other components and systems. The term "heavy-duty," as used to describe an item, shall mean in excess of the standard quantity, quality, or capacity and represents the best, most durable, strongest, etc., part, component, system, etc., that is commercially available on the OEM chassis.

3.1.2 TYPE I AMBULANCE (10,001 TO 14,000 GVWR).

Type I vehicle shall be a cab chassis furnished with a modular ambulance body.

3.1.2.1 TYPE I - AD (ADDITIONAL DUTY) AMBULANCE (14,001 GVWR OR MORE).

Type I-AD shall be a Cab-Chassis with modular ambulance body, increased GVWR, storage, and payload.

3.1.3 TYPE II AMBULANCE (9201 – 10,000 GVWR).

Type II ambulance shall be a long wheelbase Van, with Integral Cab-Body.

3.1.4 TYPE III AMBULANCE (10,001 TO 14,000 GVWR).

Type III shall be a Cutaway Van with integrated modular ambulance body.

3.1.4.1 TYPE III- AD (ADDITIONAL DUTY) AMBULANCE (14,001 GVWR OR MORE).

Type III-AD shall be a Cutaway Van with integrated modular body, and increased GVWR, storage, and payload.

3.1.5 CONFIGURATION OF PATIENT COMPARTMENT.

Primary cot shall be loaded to position the patient's head forward in the ambulance. The primary cot shall be mounted to provide maximum access from the EMSP seat.

3.2 VEHICLE, AMBULANCE COMPONENTS, EQUIPMENT, AND ACCESSORIES.

The emergency medical care vehicles; including chassis, ambulance body, equipment, devices, medical accessories, and electronic equipment shall be standard commercial products, tested and certified to meet or exceed the requirements of this specification. The ambulance shall comply with all Federal Motor Vehicle Safety Standards (FMVSS) and other Federal and state regulations applicable or specified for the year of manufacture. The chassis, components, and optional items shall be as rep-

Source: https://assist.dla.mil -- Downloaded: 2016-12-11T08:17Z
Check the source to verify that this is the current version before use.

resented in the OEM's current technical data. The ambulance body, equipment, and accessories shall be as represented in their respective FSAM's current technical data. The FSAM shall provide total standardization and interchangeability between similar vehicles, equipment, items, and accessories specified for all ambulance units under each contract.

3.2.1 MEDICAL DEVICES.

All medical devices furnished must be marketed in compliance with Food and Drug Administration (FDA) regulatory requirements.

3.3 RECOVERED MATERIALS.

All equipment, material, and articles required under this specification are to be new or fabricated from new materials produced from recovered materials. The term "recovered materials" means materials that have been collected or recovered from solid waste and reprocessed to become a source of raw materials, as opposed to virgin raw materials. None of the above shall be interpreted to mean that the use of used or rebuilt products is allowed.

3.4 VEHICLE OPERATION, PERFORMANCE, AND PHYSICAL CHARACTERISTICS.

3.4.1 OPERATION AND PERFORMANCE.

All requirements in Section 3.4 shall be met with the ambulance loaded at curb weight plus total usable payload. The vehicle shall be capable of operating safely and efficiently under the environmental conditions outlined.

3.4.2 TEMPERATURE CONDITIONS.

3.4.2.1 EXTERIOR.

The ambulance and equipment shall be operable in ambient temperature ranging from 0°F to 95°F.

3.4.2.2 INTERIOR.

The interior of the ambulance patient compartment must be maintained at a minimum temperature of 50°F when the ambulance is prepared for immediate response. This requirement does not apply to ambulances that are fully operational but being held in reserve or ambulances that are not fully operational.

3.4.3 NOISE AND SOUND LEVEL LIMITS, EXTERIOR.

Unless more stringent sound levels are regulated by the states and municipalities where the ambulance will be based, the exterior noise level produced by the vehicle, except siren, shall not exceed federal regulations.

3.4.4 VEHICLE PERFORMANCE.

The ambulance shall provide a smooth, stable ride. When available from the OEM, automatic vehicle stability control (AVSC) shall be furnished.

Source: https://assist.dla.mil -- Downloaded: 2016-12-11T08:17Z
Check the source to verify that this is the current version before use.

3.4.5 SPEED.

The vehicles shall be capable of a sustained speed of not less than 65 mph over dry, hard surfaced, level roads, at sea level, and passing speeds of 70 mph when tested under normal ambient conditions.

3.4.6 ACCELERATION.

Vehicle shall have a minimum average acceleration, at sea level, of 0-55 mph within 25 seconds. Test shall be performed under normal ambient conditions.

3.4.7 GRADEABILITY.

The vehicle shall be capable of meeting the following performance requirements. The determination shall be made by actual test or OEM's certified computer prediction.

3.4.7.1 GRADEABILITY AT SPEED.

Minimum gradeability at speed shall be 55 mph on a 3% (1.72°) grade.

3.4.7.2 MINIMUM LOW SPEED GRADEABILITY.

The minimum low speed gradeability shall be 5 mph on a 35% (19.3°) grade.

3.4.8 FUEL RANGE.

The ambulance shall be capable of being driven for at least 250 miles without refueling.

3.4.9 FORDING.

The vehicle shall be capable of three fordings, without water entering patient and equipment compartments while being driven through a minimum of 8" of water, at speeds of 5 mph, for a distance of at least 100'.

3.4.10 VEHICLE PHYSICAL DIMENSIONAL REQUIREMENTS.

3.4.10.1 LENGTH.

Overall length of the ambulance (OAL) shall be specified by the purchaser, including bumpers, rear step and bumper guards.

3.4.10.2 WIDTH.

The overall width of ambulance bodies having dual rear wheels shall be a maximum of 96", excluding mirrors, lights, and other safety appurtenances.

The ambulance body sides, on a chassis with dual rear wheels, shall be symmetrical and within +/- 2.5" of the overall width of the tires (outside sidewalls). The 2.5" allowance is not cumulative; it applies individually to each side. Tires shall not extend beyond the fenders.

3.4.10.3 HEIGHT.

The purchaser shall specify the overall height of the ambulance when loaded to curb weight. This includes roof-mounted equipment, but excludes two-way radio antenna(s).

Source: https://assist.dla.mil -- Downloaded: 2016-12-11T08:17Z
Check the source to verify that this is the current version before use.

3.4.10.4 ANGLE OF APPROACH, RAMP BREAKOVER AND DEPARTURE.

With the exception of the OEM's furnished and installed components, the ambulance shall provide not less than the following clearance, measured in accordance with SAE J689.

Approach angle 20°
Ramp breakover 10°
Departure angle 10°

3.4.10.5 TURNING RADIUS.

Turning radius shall not be greater than the OEM standard.

3.4.10.6 FLOOR HEIGHT.

The finished floor (loading) height shall be a maximum of 34".

3.5 VEHICLE WEIGHT RATINGS AND PAYLOAD.

3.5.1 CURB WEIGHT.

Non-permanently mounted equipment is considered to be part of the payload, not the curb weight.

3.5.2 PAYLOAD CAPACITY.

Each ambulance's payload capacity shall be determined by completing the payload calculation form in Figure 2. The payload value of Figure 2, item 9 shall be displayed on the certification and payload signage as shown in Figure 1. The label shall be located in a conspicuous location in the ambulance.

The required minimum payload per vehicle without optional equipment shall be as follows:

1. Single rear wheeled, van ambulances (Type II)—1500 lbs.
2. Dual rear wheeled, modular ambulances (Type I or III)—1750 lbs.
3. Additional duty modular ambulances (Type I AD or III AD)—2,250 lbs.

The ambulance shall not be operated in an overloaded condition. EMSPs should determine that the actual load, to be placed on the vehicle, does not exceed the total usable payload as manufactured. Any additional items attached to, or carried on the vehicle by the EMSP will reduce the combined weight of occupants and cargo that comprise the total usable payload.

Additional weight added, resulting from specified options, will reduce the available minimum payload per vehicle.

Occupant weight shall be accommodated at 150 lbs. for each designated seating position and the primary patient.

Source: https://assist.dla.mil -- Downloaded: 2016-12-11T08:17Z
Check the source to verify that this is the current version before use.

FIGURE 1 – Certification & Payload Signage

The label shall be mounted on the body (module) interior in a conspicuous location.

- The label shown here is suggested format.
- Deviations in dimensions are acceptable.
- All text must be included.

CERTIFIED "STAR OF LIFE" AMBULANCE

Date of Manufacture _____

Mfg By _____

Address _____

City _____ State _____ Zip _____

This ambulance conforms to Federal Specification KKK-A-1822 in effect on the date the ambulance was contracted for.

Final Stage Ambulance Manufacturers ID Number _____

VIN _____

OEM Chassis Model, Year of Manufacture _____

Vehicle Type _____

NOTICE: THIS VEHICLE, AS MANUFACTURED, CONFORMS TO THE PAYLOAD REQUIREMENTS OF THE FEDERAL AMBULANCE SPECIFICATION KKK-A-1822. USERS SHALL NOT LOAD VEHICLES ABOVE THE GVWR, GAWRs OR EXCEED THE TOTAL USABLE PAYLOAD LISTED BELOW.

TOTAL USABLE PAYLOAD _____ lbs.
(TOTAL REMAINING WEIGHT CAPACITY OF OCCUPANTS AND CARGO USER MAY ADD)

FIGURE 2 – Payload Calculation Form

The completed form shall be included in the handbook of instructions.

- The form shown here is suggested format.
- Deviations in dimensions are acceptable.
- All text must be included.

CUSTOMER USABLE PAYLOAD INFORMATION

Final Stage Ambulance Manufacturer's Name: _____

OEM Chassis Year, Make, Model: _____

1) Ambulance Model, Type, Prod. #: _____
2) OEM GAWR – Front: _____ lbs
3) OEM GAWR – Rear: _____ lbs
4) OEM GVWR: _____ lbs
5) Minimum Payload Per KKK-A-1822: _____ lbs
6) Curb Weight – **AS BUILT** – Front Axle: _____ lbs
7) Curb Weight – **AS BUILT** – Rear Axle: _____ lbs
8) Total Curb Weight – **AS BUILT**: _____ lbs
9) **CUSTOMER USABLE** Total Payload **AS BUILT** (item 4 minus item 8): _____ lbs
10) **CUSTOMER USABLE** Front Axle Payload **AS BUILT** (item 2 minus item 6): _____ lbs
11) Total Weight of Permanently mounted Options Specified (only required if item 9 does not meet or exceed item 5): _____ lbs
12) Payload of Basic KKK Vehicle (item 9 plus item 11) (only required if item 9 does not meet or exceed item 5): _____ lbs

Source: https://assist.dla.mil -- Downloaded: 2016-12-11T08:17Z
Check the source to verify that this is the current version before use.

3.5.3 GROSS VEHICLE WEIGHT RATING (GVWR).

The combination of the vehicle's curb weight and total usable payload weight shall not exceed the ambulance GVWR.

3.5.4 WEIGHT DISTRIBUTION.

Purchasers and FSAMs shall locate vehicle-mounted components, equipment, and supplies to provide a vehicle that is laterally balanced and within the GVWR and each gross axle weight rating (GAWR). The right and left wheel(s) of each axle of a completed ambulance shall be weighed to determine horizontal and lateral weight distribution. The weight distribution of a properly loaded ambulance on a level surface shall permit conformance to the FMVSS braking requirements in accordance with the statements provided by the OEM. All specifications and requirements for weight distribution and center of gravity of the OEM shall take precedence over the requirements contained in this section where the OEM's requirements are more restrictive or comprehensive.

- The weight between the right and left side of a given axle, when on a level surface, shall be within 5%.
- When loaded to the GVWR and within the GAWR for each axle, the front to rear weight distribution shall have not less than 20% of the total weight on the front axle, and not less than 50% nor more than 80% on the rear axle.
- The FSAM shall locate the center of gravity (CG) of the vehicle according to the requirements set by the OEM to determine and assure that the CG of the completed ambulance does not exceed any maximum horizontal and/or vertical limits.

To meet the above weight distribution requirements, consideration shall be given by the purchaser and FSAM to locate equipment and components to permit inherently proper lateral balance, front/rear axle loading, and center of gravity position.

3.5.5 RATINGS.

Vehicle and component ratings shall be the OEM's published ratings and shall not be raised above the OEM's rating.

3.5.6 CAB TO AXLE (CA), TYPE I AND III VEHICLES.

Cab to axle (CA) dimension of the vehicle chassis shall permit a minimum of 50% of the outside body length (including cab extensions) forward of the rear axle centerline, in addition to any cab to body clearance. Bodies designed with wheel openings shall have the rear wheels centered, within +/- 2" of those openings.

Source: https://assist.dla.mil -- Downloaded: 2016-12-11T08:17Z
Check the source to verify that this is the current version before use.

3.6 CHASSIS, POWER UNIT, AND COMPONENTS.

3.6.1 CHASSIS-FRAME.

The chassis shall include the OEM's ambulance preparation package when available. The chassis-frame and components shall be constructed to withstand the strains of on-off road service and any special service and equipment requirements specified. All chassis (including cab) components shall be as represented in the OEM's technical data.

3.6.2 VEHICLE LUBRICATION.

The chassis components, devices, accessories, and added equipment requiring lubrication shall be fully equipped with lubrication fittings, as provided by the OEM or equipment manufacturer.

3.6.3 POWER UNIT, ENGINE.

3.6.3.1 POWER UNIT.

The power unit shall meet or exceed the required vehicle performance specified at not more than the engine manufacturer's recommended operating engine speed. The OEM's diesel engine and power train shall be provided. The OEM's block heater shall also be furnished.

3.6.3.2 ENGINE LOW TEMPERATURE STARTING.

The engine shall start satisfactorily without the aid of engine block preheating devices (except glow plugs) or combustion air preheater at 0°F. The determination shall be made by actual test or OEM's certification.

3.6.4 POWER UNIT COMPONENTS.

3.6.4.1 OIL FILTER.

The oil filter shall be the OEM's standard for the engine offered.

3.6.4.2 AIR FILTER.

The air filter shall be the OEM's standard for the engine offered.

3.6.4.3 AIR POLLUTION CONTROL.

Vehicles destined for the 50 states, the District of Columbia, Puerto Rico, the Virgin Islands, Guam and American Samoa shall comply with the Environmental Protection Agency (EPA) regulations governing Control of Air Pollution from New Motor Vehicles and New Motor Vehicle Engines in effect on date of manufacture of the engine.

3.6.4.4 FUEL SYSTEM.

The fuel system shall conform to all applicable FMVSS, FMCSR, CARB, and EPA requirements.
The fuel system components shall be installed, connected, and routed in accordance with all OEM's guidelines. A permanent label at the fuel filler opening shall be furnished specifying the specific type of fuel required.

Source: https://assist.dla.mil -- Downloaded: 2016-12-11T08:17Z
Check the source to verify that this is the current version before use.

3.6.4.5 COOLING SYSTEM.

A coolant overflow recovery tank and compensating system shall be furnished. The cooling system shall be protected with an OEM solution of extended life antifreeze/coolant. Coolant to be the OEM's recommended type and mixture. The FSAM shall provide the OEM maximum size cooling system for the engine provided. The cooling system design shall maintain the engine at safe operating temperatures at all drivable altitudes and grades encountered during on and off road vehicle use.

3.6.4.6 EXHAUST SYSTEM.

The exhaust shall discharge at the vertical side(s) of the ambulance at a maximum distance of 1" beyond the side of the module and be angled /positioned to project the exhaust away from the door(s) to minimize fumes and contaminants entering the interior. On modular vehicles, the tailpipe outlet shall not terminate within 12" of the vertical axis of the fuel tank filler opening(s) when located on the same side. Modifications or extensions made to the OEM exhaust system shall meet or exceed OEM's requirements in terms of backpressure, components, design, and workmanship.

3.6.5 DRIVE TRAIN.

3.6.5.1 DRIVE TRAIN COMPONENTS.

The drive train and component's torque capacity shall meet or exceed the maximum torque developed in the lowest gear ratio by the engine.

3.6.5.2 AUTOMATIC TRANSMISSION.

The OEM's automatic transmission shall be provided. The transmission shall provide not less than four speeds forward and one reverse and shall be equipped with the OEM's heaviest duty transmission fluid cooler.

3.6.5.3 DRIVELINE.

The driveline (driveshaft, U-joints, etc.) shall be balanced and supported to perform throughout the design speed range without whipping or vibrating.

3.6.5.4 BRAKE SYSTEMS, SERVICE AND PARKING.

OEM's heaviest duty, power assisted brakes, linings, and parking brake shall be furnished on the OEM chassis offered. Antilock brake systems shall be furnished when available from the OEM.

3.6.5.5 SPECIAL TRACTION (REAR END) DIFFERENTIAL.

All ambulances shall have a positive traction, limited slip differential or automatic, locking type differential, unless not furnished with the OEM's AVSC system.

3.6.5.6 SUSPENSION.

Vehicle shall be equipped with laterally matched sets (front and rear) of spring, torsion, or air suspension system components. Components shall have a rated capacity in excess of the load imposed on each member. Only corrections permitted by the OEM to compensate for lean due to normal spring tolerance variations are permitted. Correction of lean due to imbalance is not permitted.

Source: https://assist.dla.mil -- Downloaded: 2016-12-11T08:17Z
Check the source to verify that this is the current version before use.

3.6.5.7 SPRING STOPS.

The OEM's standard spring bumpers and axle stops shall be furnished. The stops/bumpers shall prevent the wheel and axles from striking the engine, oil pan, fenders, and body under all conditions of operation.

3.6.5.8 SHOCK ABSORBERS.

Shock absorbers, double-acting type, heaviest duty available from OEM for model offered, shall be furnished on the front and rear axles.

3.6.6 STEERING.

The OEM's standard, power assisted steering shall be furnished.

3.6.7 WHEELS.

Types I, I AD, III & III AD ambulances shall be equipped with dual rear wheels and single front wheels. Type II ambulances shall be equipped with single, front and rear wheels. Wheels shall conform to the recommendations of the Tire and Rim Association, Inc., and shall be identical in type, size, and load rating for all wheels on the ambulance.

3.6.8 TIRES.

Tires shall be as furnished by the OEM and shall be OEM tubeless, steel belted radials.

3.6.9 TIRE CHAINS AND CLEARANCE.

Tire chain clearance on the furnished body shall be provided for all driving wheels per SAE J683. Sufficient chain clearance shall be provided to permit off road operation with the ambulance loaded to the maximum payload.

3.6.10 WHEEL TIRE BALANCING.

Wheel/tire, hubs, and brake drum assemblies of the vehicle shall be dynamically balanced to a minimum of 70 mph.

3.6.11 HUBCAPS.

When available from the OEM standard hubcaps or wheel covers shall be furnished on Type II ambulances.

Source: https://assist.dla.mil -- Downloaded: 2016-12-11T08:17Z
Check the source to verify that this is the current version before use.

3.7 ELECTRICAL SYSTEM AND COMPONENTS.

3.7.1 ELECTRICAL SYSTEM.

The ambulance electrical system shall be equipped with, but not limited to, the following:

1. Dual, OEM's batteries.
2. Generating, starting, lighting, visual and audible warning systems.
3. Specified electronics equipment and devices (including master consoles located in the cab and patient compartment).
4. Other specified accessory wiring.
5. All electrical system components and wiring shall be readily accessible through access panels.
6. All switches, indicators, and controls shall be located and installed in a manner that facilitates easy removal and servicing.
7. All exterior housings of lamps, switches, electronic devices, connectors, and fixtures shall be corrosion resistant and weatherproofed.
8. Electrical fixtures attached to the exterior sides of the ambulance below the 75" level shall be near flush mounted and not protrude more than 2", except for such items as spotlights and ventilators.
9. All electrical devices and equipment installed, including the electromagnetic coils of high current solenoids, and relays etc, which produce RFI, shall include filters, suppressers, or shielding to prevent electromagnetic radiation and the resultant interference to radios and other electronic equipment.
10. Vehicles shall be immune from interference caused by radio transmissions.

3.7.1.1 WARNING INDICATORS.

The electrical system shall incorporate a warning light panel located in the driver's compartment. It shall provide indicator lights for:

1. Open patient compartment entry doors.
2. Open cab entry doors (when available from the OEM).
3. Open equipment compartment door(s).
4. Extended devices (flood lights, etc).

The "Door/Equipment Open" indicator in the driver's compartment can be either a warning incandescent light with at least 0.2 sq. in. of lighted surface, an electronic text message visible in all ambient lighting conditions, or LED's with equal intensity as an incandescent light source.

Electronic displays that are visible in all ambient light, that projects narrative information may be used in lieu of discrete, colored, indicator/ warning lights provided the projected message is at least as visible as the basic required warning light.

3.7.2 WIRING INSTALLATION.

1. The ambulance body and accessory electrical equipment shall be served by circuit(s) separate and distinct from vehicle chassis circuits.
2. All wiring provided by the FSAM shall be copper.
3. All wiring shall have type SXL or GXL high temperature cross-linked polyethylene, or better, insulation.
4. The use of multi conductor or ribbon cables are permitted provided they are not exposed to under hood or under vehicle temperatures/conditions.
5. The wiring shall be permanently color coded or marked the entire length of the wire.

Source: https://assist.dla.mil -- Downloaded: 2016-12-11T08:17Z
Check the source to verify that this is the current version before use.

6. Wiring shall be routed in conduit or high temperature looms with a rating of 300°F.
7. When cables are supplied by a component manufacturer to interconnect system components, these cables need not be continuously color coded/identified. They shall be coded/identified at the termination or interconnection points.
8. All added wiring shall be located in accessible, enclosed, protected locations and kept at least 6" away from exhaust system components.
9. Electrical wiring and components shall not terminate in the oxygen storage compartment except for the oxygen controlled solenoid, compartment light, and switch plunger or trigger device.
10. Wiring necessarily passing through an oxygen compartment shall be protected from damage.
11. All conduits, looms, and wiring shall be secured to the body or frame with insulated metal cable straps.
12. All apertures on the vehicle shall be properly grommeted for passing wiring.
13. All items used for protecting or securing the wiring shall be appropriate for the specific application and be standard automotive, aircraft, marine, or electronic hardware.
14. Cable ties shall not be used to support harnesses, but may be used for bundling purposes.
15. Electrical panels that are accessible to accidental contact shall have a protective cover, shield, etc. to prevent shorts that can result in injury, fire, or damage to the electrical system.

3.7.2.1 WIRING CRITERIA.

1. All wiring (including grounds), devices, switches, outlets, etc., except circuit breakers, shall be rated to carry at least 125% of the maximum ampere load.
2. A service loop of wire or harness shall be provided at all electrical components, terminals, and connection points.
3. All splices and terminals provided shall comply with SAE J163, J561, or J928 as applicable.
4. All terminals shall be permanently numbered or coded.
5. Terminal strip(s) block(s), or multi-pin connector(s) shall be readily accessible for checking and service.
6. All exterior wiring to lights or any other component shall utilize sealed connectors or splices.
7. The ambulance electrical system shall incorporate a master circuit breaker panel with circuit breakers or other electronic, non-disposable, current protection devices, in each circuit, which comply with SAE J553 Type I, or Type III (if circuit breaker is readily accessible for resetting by the driver or EMSP).
8. When multiconductor cables/ribbon cables are used for low current (self limiting) circuits, additional fuses/circuit breakers are not required.
9. One extra 15-ampere circuit breaker shall be provided for future use.
10. For high current circuits, where SAE Type I breakers are not commercially produced, protection for these circuits may be provided with other types of circuit breakers.
11. All circuit breakers shall be securely mounted, easily removable, and readily accessible for inspection and service.
12. All electrical and electronic components, switches, connectors, circuit breakers, lamps, and indicators, including the vehicle batteries, shall be marked with an easily read identification code number and/or letter.

Source: https://assist.dla.mil -- Downloaded: 2016-12-11T08:17Z
Check the source to verify that this is the current version before use.

3.7.2.2 PRINTED CIRCUITS.

When printed circuits are utilized, they shall conform to IPC A-610D standards, "Acceptability of Electronic Assemblies." Printed circuit assemblies provided must qualify under Classification 1.4.1 as class 3 for "Life Support or other Critical Assemblies." Printed circuit board connections and components shall conform to all other specification requirements.

3.7.3 GROUNDING.

Dedicated grounds for all appliances, circuits, etc. shall be furnished. The use of appliance mounting screws/hardware shall not be used for grounding purposes unless specifically designed for such use by the appliance manufacturer.

3.7.3.1 RF GROUNDING.

To provide RF grounding and minimize potential interference with OEM's computers, the module and chassis cab shall be connected to the chassis frame with a separate dedicated minimum 3/4", braided ground strap with soldered ends that are secured to cleaned metal surfaces on the body and frame with lock washers. To prevent corrosion, both ends of the attached ground strap shall then be sealed with either rust proofing compounds or non-hardening battery terminal sealer. Regular stranded copper wire, while providing a DC ground, does not provide RF grounding and does not meet this requirement.

3.7.4 WINDSHIELD WIPERS AND WASHERS.

Vehicle shall be equipped with OEM intermittent windshield wipers.

3.7.5 HORNS.

The OEM's dual electric horns shall be furnished.

3.7.6 LOW VOLTAGE ELECTRICAL SYSTEM.

The ambulance shall, when available from the OEM, be equipped with standard or optional generating system designed for ambulance applications, and shall be nominally rated at 14 volts, with a minimum under hood temperature of 200°F. As a minimum, the generating system shall be capable of supplying at its regulated voltage, at 200°F, the continuous electrical load, which consists of the following electrical equipment and systems:

1. Engine/transmission control system.
2. Headlights (low beam).
3. All FMVSS 108 lights.
4. Windshield wipers (low speed).
5. Cab air conditioning (at coldest setting with highest blower speed).
6. Radio in receiving mode (or equal load, if not equipped).
7. Patient module dome lighting (in the high intensity setting).
8. Patient module air conditioning (at coldest setting with highest blower speed).
9. Emergency warning lighting system (in the daytime "primary" mode).
10. 20 amp medical load or equal.

Source: https://assist.dla.mil -- Downloaded: 2016-12-11T08:17Z
Check the source to verify that this is the current version before use.

The generating system shall supply the maximum electrical load, at the regulated voltage, at 200°F under hood temperature, and with an engine speed not exceeding of the furnished engine manufacturer's high idle setting in order to maintain battery charge at the regulated voltage. The throttle control device shall control the engine RPM necessary to maintain the heating and air conditioning systems, at full operating capacity, and to maintain the generating system's required output when the vehicle is stationary and the parking brake is set. The 12-volt electrical system shall incorporate a voltmeter and low voltage warning device which is functionally connected as shown in Figure 3. The FSAM shall test each ambulance prior to delivery and provide, to the purchaser, a written certification indicating the amount of generating capacity remaining, at the regulated voltage, at 200°F, after supplying the total electrical load as manufactured (including the purchaser options).

3.7.6.1 ENGINE HIGH-IDLE SPEED CONTROL.

The OEM Engine High-Idle speed control shall be furnished. The control shall be set to automatically increase the engine speed (RPM) to the engine manufacturer's recommended setting to sustain the ambulance's total continuous electrical load at the regulated voltage and provide maximum heating/air conditioning output.

The device shall operate only when switched to the "ON" position and the transmission is in "PARK" or "NEUTRAL." The parking brake shall be applied at all times when the Engine High-Idle speed control is in use.

The device shall disengage high idle operation according to OEM and/or engine manufacturer disablement strategy, or if not specified, when the operator depresses the service brake pedal or the transmission is placed in gear.

3.7.6.2 VOLTMETER AND VOLTAGE MONITOR.

A voltmeter illuminated for nighttime operation shall be furnished. The electrical system shall be monitored by a system that provides an audible and visual warning in case of the low voltage to persons in the ambulance of an impending electrical system failure caused by the excessive discharge of the batteries. The charge status of the battery shall be determined by direct measurement of the battery voltage. The alarm shall sound if the system voltage at the battery drops below 11.8 V for 12 V nominal systems for more than 120 seconds.

3.7.7 BATTERY SYSTEM.

Two batteries (or additional batteries as required by the OEM) for ambulance use shall be furnished. The batteries shall be equivalent to the OEM batteries. Batteries shall be located in a ventilated area, sealed off from occupant compartments, and shall be readily accessible for servicing and removal. When batteries are mounted in the engine compartment, they shall be provided with a heat shield as a safeguard against high under hood temperatures when relocating batteries; the OEM shall approve the method of relocation.

Source: https://assist.dla.mil -- Downloaded: 2016-12-11T08:17Z
Check the source to verify that this is the current version before use.

3.7.7.1 AUTOMATIC CHARGER/CONDITIONER.

An automatic charger/conditioner shall be provided.

1. The charger/conditioner shall be connected to the 12-volt DC battery system as shown in Figure 3.
2. The charger/conditioner shall be capable of supplying a minimum of 10 amperes charging current.
3. The charger/conditioner shall be permanently mounted, in the vehicle, in a properly ventilated, accessible location and wired to the 125-volt AC utility power as shown in Figure 4.
4. The battery conditioner shall monitor the battery state of charge and, as necessary, automatically charge or maintain the batteries without gassing, depleting fluid level, overheating, or overcharging.
5. A permanently mounted decal or engraved plate shall be furnished in a conspicuous location in the cab stating:

"This vehicle is equipped with a battery conditioner to maintain batteries in a full state of charge, and a dedicated 12-volt recharging circuit for portable battery powered equipment. For operation, vehicle shall be plugged into 125-volt AC shore power during periods of non-use."

3.7.7.2 PORTABLE EQUIPMENT CHARGING CIRCUIT.

A circuit shall be furnished (Figure 5) for charging all portable battery powered devices, i.e. suction units, hand lights, portable radios, etc. This circuit shall prevent discharge of chassis batteries by only permitting the charging of portable devices when the vehicle is either running or the optional battery conditioner is connected to shore power. Circuit breaker protection shall be provided and shall have a minimum 10 amp capacity. An additional tagged, identified lead shall be furnished in both the cab and module for connection of additional (future) portable equipment that requires recharging.

3.7.7.3 INTERNAL 12-VOLT DC POWER (REFERENCE FIGURE 3).

Two automotive "Power Point" type connectors shall be furnished, in the patient compartment. Each connector shall be rated for 12-volt DC, 20 ampere capacity, and be on a separately protected circuit. This circuit shall also include a (low voltage drop) "Schottky" diode to isolate medical equipment batteries from any electrical loads that the remainder of the ambulance electrical system may impose. The "Schottky" diode shall be heat-sink mounted, have an inverse voltage rating of at least 45 volts and also be rated to carry the maximum short circuit current, until the circuit breaker opens. The diode shall be physically located in an accessible location and be electrically connected between the circuit breaker and the "action wall" mounted connectors.

3.7.7.4 MASTER MODULE DISCONNECT SWITCH OR DEVICE.

An illuminated "Module Disconnect" switch shall control all electrical loads added by the FSAM, or an illuminated switch controlled solenoid as shown in Figure 3. This switch shall be located in the driver's compartment, be legibly marked, illuminated when "ON," and rated to carry at least 125% of the circuit's maximum current. The module disconnect switch or device shall be different in feel from other switches, or be physically isolated from them.

Source: https://assist.dla.mil -- Downloaded: 2016-12-11T08:17Z
Check the source to verify that this is the current version before use.

3.7.8 125-VOLT AC UTILITY POWER (REFERENCE FIGURE 4)

The ambulance shall be furnished with a 2-wire plus ground 125-volt AC wiring system that is separate and distinct from the vehicle's DC wiring system(s). Listing shall be by a nationally recognized testing laboratory, recognized by OSHA under Appendix A to 29 CFR 1910.7. The AC system is to be utilized while the vehicle is stationary for powering maintenance devices, medical equipment and battery chargers. The AC system shall not be utilized for operational ambulance interior lighting, such as dome and cot lights.

3.7.8.1 UTILITY POWER CONNECTOR.

A 125-volt AC flanged inlet conforming to NEMA 5-15, with spring loaded cover assembly suitable for wet locations, shall be installed on the driver's side of the ambulance body in close proximity to driver's door. The connection shall be permanently labeled with the following:

THIS CONNECTION IS FOR 125-VOLT AC, 60 Hz, 15-AMPERE SUPPLY.

This receptacle shall energize the vehicle's internal AC circuit from an external power source (utility power). The purchaser's stationary utility power circuit supplying the ambulance's 125-volt AC power should incorporate ground fault protection. A proper mating, weatherproof, 15 ampere connector body conforming to NEMA 5-15 shall also be furnished without cable and tagged specifying the size, type of wire necessary, and the polarity of the future hookup.

3.7.8.2 ELECTRICAL 125-VOLT AC RECEPTACLES.

The patient compartment shall be furnished with two (2) 125-volt AC duplex receptacles conforming to NEMA 5-15. Receptacles shall be near flush, vertically mounted. All interior outlets shall be installed in accordance with Section 210-7 (Receptacles and Cord Conductors) of the NEC. One outlet shall be located on the primary patient action wall and the other shall be located in the right front cabinet/storage area. Both outlets shall be at least 12 in from any oxygen outlet. An indicator shall be located within each 125-volt AC receptacle as a line monitor indicating a live (hot) circuit. The receptacles shall be labeled with the following: "125-VOLT AC."

3.7.8.3 125-VOLT AC SYSTEMS.

1. The electrical equipment and material indicated for connection to a wiring system rated 125 volts, nominal, 2-wire with ground shall incorporate a minimum 15 ampere circuit breaker which can be used as a master AC disconnect switch.
2. The AC wiring shall utilize stranded wire, Type SO or Type SEO cord with a WA suffix, rated at 600V and 194°F, covered with a minimum 300°F flame retardant wire loom, or approved wire in conduit.
3. All products shall be used only in the manner for which they were tested and found suitable.
4. Other sources of AC power shall be wired in full conformity with the requirements of this standard.
5. Grounding shall be in accordance with Section 250-6 [Portable and Vehicle Mounted Generators] of the National Electrical Code (NEC).
6. All 125-volt AC receptacle outlets of the ambulance shall have ground fault circuit interrupter protection.

Source: https://assist.dla.mil -- Downloaded: 2016-12-11T08:17Z
Check the source to verify that this is the current version before use.

7. Where rigid metal conduit or intermediate metal conduit is terminated at an enclosure with a lock nut and bushing connection; two lock nuts shall be provided, one inside and one outside of the enclosure. All cut ends of conduit shall be reamed or otherwise finished to remove rough edges.
8. Boxes are required for all inlets and/or outlets.
9. Non-metallic boxes shall be acceptable only with non-metallic conduit.
10. Boxes shall be mounted in accordance with Article 370 [OUTLET, DEVICE, PULL AND JUNCTION BOXES, CONDUIT BODIES AND FITTINGS] of the NEC.
11. No bend shall have a radius of less than five times the cable or conduit diameter, whichever is greater.
12. Tubing, conduit and loom shall be supported with clamps at the outlet boxes, distribution panel boards and splice boxes on appliances. Supports shall be provided every 24".
13. Where subject to physical damage, exposed type SO cable will be protected by guard strips, raceways or other means.
14. The branch circuit over current devices shall be rated:
    a) Not more than the circuit conductors and
    b) Not more than 150% of the rating of a single appliance rated 13.3 amperes or more and supplied by an individual branch circuit, or according to the appliance manufacturer, but
    c) Not more than the over current protection size marked on motor-operated appliances

3.7.8.4 DISTRIBUTION BOX.

1. The distribution box shall be of the dead-front type and shall be installed in a readily accessible location.
2. The distribution panel board shall have a grounding bus with sufficient terminals for all chassis grounding and separate neutral grounding conductors or other approved grounding means.
3. The grounded circuit conductor (neutral) shall be insulated from the equipment grounding conductors and from equipment enclosures and other grounded parts. The grounded (neutral) circuit terminals in the distribution panel board and in appliances shall be insulated from the equipment enclosure.

3.7.8.5 INTERIOR EQUIPMENT GROUNDING.

1) In the electrical system, all exposed metal parts, enclosures, frames, fixtures, canopies, etc., shall be effectively bonded to the grounding terminals or enclosure of the distribution panel board.
2) Only bare wires, green colored or green wires with yellow stripes shall be used for equipment grounding conductors.
3) Grounding of electrical equipment shall be provided as follows:
    a) Connection of metal raceway, i.e., conduit or electrical metallic tubing.
    b) A connection between the one or more equipment grounding conductor and a metal box by means of a grounding screw (which shall be used for no other purpose) or a listed grounding device.
    c) The equipment grounding conductor shall be permitted to be secured under a screw threaded into the fixture canopy other than a mounting screw or cover screw or attached to a listed grounding means (plate) in a non-metallic outlet box for fixture mounting (grounding means shall also be permitted for fixture attachment screws).
    d) A connection between the one or more equipment grounding conductors brought into a non-metallic outlet box shall be so arranged that a connection can be made to any fitting or device in that box which requires grounding.

Source: https://assist.dla.mil -- Downloaded: 2016-12-11T08:17Z
Check the source to verify that this is the current version before use.

e) Where more than one equipment grounding conductor or branch circuit enters a box, all such conductors shall be in good electrical contact with each other and the arrangement shall be such that the disconnection or removal of a receptacle, fixture, or other device fed from the box will not interfere with or interrupt the grounding continuity.

f) Cord-connected appliances shall be grounded by means of an approved cord with equipment grounding conductor and grounding attachment plug.

3.7.8.6 BONDING OF NON-CURRENT-CARRYING METAL PARTS.

1) All exposed non-current carrying metal parts that may become energized shall be effectively bonded to the grounding terminal or enclosure of the distribution panel board.
2) A bonding conductor shall be connected between the distribution panel board and an accessible terminal on the chassis. Aluminum or coppered aluminum conductors SHALL NOT be used. Any ambulance that employs a unitized metal chassis-frame construction to which the distribution panel is securely fastened with a bolt and nut shall be considered to be bonded.
3) Grounding terminals may be of the solderless type and listed as pressure terminal connectors recognized for the wire size used. The bonding conductor shall be copper strand and equal in amperage capacity to the main supply cables.
4) The ambulance body and exterior covering shall be considered bonded where:
   a) The metal panels overlap one another and are securely attached to the metal frame parts by metal fasteners or welding and
   b) The lower panel of the metal exterior covering is secured by metal fasteners at each cross member of the chassis, or the lower panel is bonded to the chassis by a metal strap.
   c) Metal circulating air ducts shall be bonded.
   d) The compressed gas pipes shall be considered bonded if they are bonded to the chassis.

3.7.8.7 APPLIANCE ACCESSIBILITY AND FASTENING.

All electrical appliances shall be accessible for inspection, service, repair, and replacement without removal of permanent construction. Appliances shall be fastened in accordance with the manufacturer's directions.

3.7.9 DRIVER COMPARTMENT CONTROLS.

In addition to the left-hand drive controls and switches, the FSAM shall provide and locate, within easy normal reach and view of the driver, the specified controls, and instruments.

3.7.10 PATIENT COMPARTMENT CONTROLS.

The patient compartment controls, switches, and instruments shall be panel mounted and located within normal reach of the seated EMSP.

3.7.11 MARKING OF SWITCHES, INDICATORS, AND CONTROL DEVICES.

All switches, indicators, and control devices supplied by the FSAM shall be clearly visible to the EMSP. They shall be perceptively and permanently identified with at least 12 point letters for the noun or function, and 8 point letters for the remainder of the legend. The identifications shall be contrasting colors etched or engraved in plastic or metal, or printed and laminated in see through plastic, and grouped according to function, and mounted in illuminated or backlit panel(s) or the console.

Source: https://assist.dla.mil -- Downloaded: 2016-12-11T08:17Z
Check the source to verify that this is the current version before use.

3.7.12 ELECTROMAGNETIC RADIATION AND SUPPRESSION.

In addition to OEM chassis, all added electrically operated or electrical generating devices, including alternators, air conditioning, warning light systems, electromagnetic coils of high current solenoids and relays, and medical equipment, shall be electromagnetic radiation suppressed, filtered, or shielded to prevent interference to radios and telemetry equipment aboard the vehicle and the surrounding area and shall not exceed MIL-STD 461 limits. Type certification for these devices is acceptable.

3.8 LIGHTING, EXTERIOR AND INTERIOR.

3.8.1 AMBULANCE EXTERIOR LIGHTING.

The basic exterior ambulance lighting shall include daytime running lights when available from the OEM. The lower front and rear side marker lights shall flash in conjunction with the directional signals. The FSAM shall furnish light assemblies that are manufactured with weather resistant materials that are installed in a manner that will not cause electrolysis of light housings or vehicle body.

3.8.2 AMBULANCE EMERGENCY LIGHTING.

An emergency lighting system shall provide the ambulance with 360° of conspicuity for safety during its missions. The system shall display highly perceptible and attention getting signals that function in a modal system, and convey the message in the "PRIMARY MODE" — "Clear the Right-of-Way" and in the "SECONDARY MODE" — "Hazard, Vehicle Stopped on Right-of-Way." The ambulance standard warning light system shall not impose a continuous average electrical load exceeding 40 amperes at 14.2 volts.

Warning light systems shall not impair the effectiveness of the ambulance's exterior lighting with conformity to the requirements of FMVSS No. 108.

3.8.2.1 EMERGENCY LIGHTING SYSTEM CONFIGURATION.

The ambulance standard emergency warning light system shall contain twelve fixed red lights, one fixed clear light and one fixed amber light. These lights shall function in a dual mode system as shown in Table 1 and meet the physical and photometric requirements. The upper body warning lights shall be mounted at the extreme upper corner areas of the ambulance body, below the horizontal roofline. The single clear light shall be centered between the two front facing, red, upper corner lights or in a dedicated housing mounted forward of the body on the cab roof. If due to limited body dimensions and physical size of the outboard forward facing lights, the lights may also be mounted in dedicated housings on the cab roof. Doors or other ancillary equipment shall not obstruct the standard warning lights. The amber light shall be symmetrically located between the two rear facing red lights. The red "grille" lights shall be located at least 30" above the ground and below the bottom edge of the windshield and be laterally separated by at least 18", measured from centerline to centerline of each lamp. The lateral facing intersection lights shall be mounted as close as possible to the front upper edge of each front fender and may be angled forward a maximum of 30°. All warning lights furnished shall be mounted to project their highest intensity beams on the horizontal plane.

Alternate approved lighting systems are NFPA 1901 compliant or SAE J2498 compliant.

Source: https://assist.dla.mil -- Downloaded: 2016-12-11T08:17Z
Check the source to verify that this is the current version before use.

TABLE 1 – Emergency Lighting

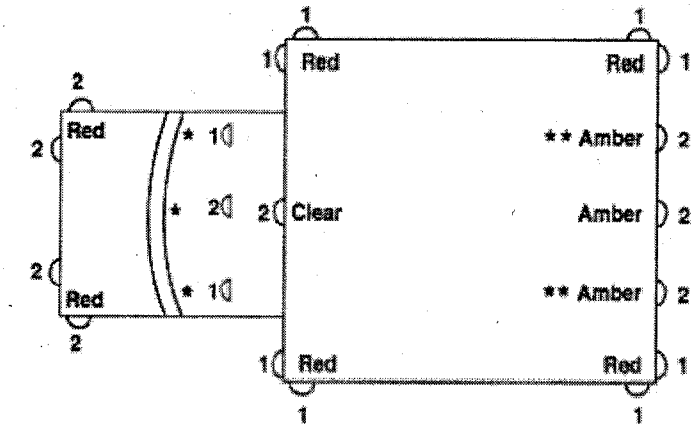

FLASH PATTERN

* Optional forward facing light locations on cab roof for two red and single center clear lights.

** Optional rear amber lights in lieu of single center light.

1 - Indicates lights flashing at the same time.
2 - Indicates lights flashing 180 degrees out of phase with 1.

MINIMUM FLASH ENERGY, Cd-S PER FLASH, PER FIXTURE				
COLOR	RED		CLEAR	AMBER
LOCATION	GRILL & FENDERS	UPPER BODY CORNERS	FRONT CENTER	REAR CENTER*
DAY	160 Cd-S @ HV	240 Cd-S @ HV	900 Cd-S @ HV	600 Cd-S @ HV
	80 Cd-S @ ± 5° H Points	120 Cd-S @ ± 5° H Points	450 Cd-S @ ± 5° H Points	300 Cd-S @ ± 5° H Points
	12 Cd-S @ All 5° V - 45° H Points	32 Cd-S @ All 5° V - 45° H Points	96 Cd-S @ All 5° V - 45° H Points	72 Cd-S @ All 5° V - 45° H Points
NIGHT	10 - 30% of the above			

* Single center rear or combined dual rear (Optional)

MODAL EMERGENCY LIGHTING SYSTEM				
COLOR & LOCATION / MODE OF OPERATION	RED	CLEAR	AMBER	RED
	Front and Rear Corners	Front Upper Center	Rear Center	Grille and Fender
PRIMARY "Clear the Right-of-Way"	ON	ON	ON	ON
SECONDARY "Hazard-Vehicle Stopped on Right-of-Way""	ON	OFF	ON	OFF

Source: https://assist.dla.mil -- Downloaded: 2016-12-11T08:17Z
Check the source to verify that this is the current version before use.

3.8.2.2 PHOTOMETRIC, CHROMATICITY, AND PHYSICAL REQUIREMENTS.

Each emergency light shall flash 75 to 125 times per minute. The chromaticity values of the lights shall conform to SAE J578, for their respective color, except for the red lights, which may conform to the following expanded boundary limits of: y =0.34; y = 0.32; x = 0.62. All warning lights shall project a beam spread of at least 5° up and 5° down and at least 45° left and right of H-V. Each light shall produce flash energy, (Cd-s) per flash, measured from the H-V to all the extreme test point coordinates and shall be tested at all 5° increments. At no point shall the Cd-s values drop to less than the minimum values as shown in Table 1 when tested at 14.2 volts. Flash energy shall be determined in accordance with the SAE J845 method for determining the flash energy of a light. Testing shall be conducted on the device(s) as manufactured including use of the actual light source and all other related system components.

3.8.2.3 SWITCHING ARRANGEMENTS.

The emergency light switches shall be wired and arranged to provide the warning light signal modes and combinations as specified. All emergency light switches shall be labeled and each Primary/ Secondary mode switch shall have indicator light to show the driver which mode is activated.

3.8.2.4 HARDWARE CONSTRUCTION AND INSTALLATION.

The emergency lighting system shall be comprised of components and devices that comply with the general requirements and tests of SAE J575, J576, J578, and J551, as applicable for the unit. Warning lights shall be firmly fastened to reinforced body surfaces in accordance with the lighting manufacturer's requirements and recommendations and include aiming wedges to compensate for sloped body surfaces, grill, hood and fender angles or mold release angles on roof caps. The FSAM shall aim the lights to assure that all lighting performance requirements herein are met. The lights shall be aimed either mechanically or optically on the horizontal axis with a tolerance of +0° to -3°.
All switches, connectors, and wiring shall be rated to carry a minimum of 125% of their maximum ampere load. When halogen or other long duty cycle light source is used, the duty cycle of any device shall not exceed 50%. When strobe lights are furnished, all high voltage leads and connections shall be insulated and enclosed, or weatherproof connectors, with the proper voltage rating shall be used.

3.8.2.5 TESTS, WARNING LIGHT SYSTEM.

The lighting manufacturers shall furnish and certify or the FSAM shall measure and record the total average current load of the standard emergency warning light system on the vehicle as manufactured at the regulated voltage of 14.2 volts, when operated in the mode which draws maximum current. The warning light system and related components and devices shall be tested and approved by an Automotive Manufacturers Equipment Compliance Agency (AMECA) accredited laboratory independent from the lighting device manufacturer's own labs and listed with the AMECA for compliance with the requirements in this specification.

3.8.3 FLOOD AND LOADING LIGHT (EXTERIOR).

Flood and loading lights shall be not less than 75" above the ground and unobstructed by open doors. Floodlights shall be located on the sides, and a patient loading light on the rear of the ambulance. They shall be firmly fastened to reinforced body surfaces, below the roofline. These floodlights shall be mounted on fixed body surfaces. Floodlight switches shall be located on the cab console and control each side independently. Loading light(s) shall automatically be activated when rear doors are opened.

Source: https://assist.dla.mil -- Downloaded: 2016-12-11T08:17Z
Check the source to verify that this is the current version before use.

3.8.4 AMBULANCE INTERIOR LIGHTING.

The basic interior ambulance lighting configuration shall be designed to minimize electrical loads and include: A driver's compartment dome light; instrument panel lights; master switch panel; and console light(s). Lighting shall be designed and located so that no glare is reflected into the driver's eyes or his line of vision, from switch control panels or other areas that are illuminated while the vehicle is in motion. The EMSP's control panel shall be separately illuminated. All lights shall have lampshells and housings grounded.

3.8.4.1 PATIENT COMPARTMENT ILLUMINATION.

The patient compartment floor shall not be less than 15 foot candles intensity, measured along the centerline of the clear floor. The primary cot shall be provided with a minimum of 35 foot candles of illumination measured on at least 90% of the cot's surface area.

Blue light(s) or lenses shall not be used. Patient compartment lights shall not be powered by the vehicle's AC system if so equipped. The patient compartment dome lighting (in the dim setting) and exterior corresponding loading lamp(s) shall be automatically activated when the side entry or rear entry patient compartment doors are opened. All interior dome lighting, including "checkout" lights, shall be near flush mounted and not protrude more than 1.5".

Dome lighting shall not consume more than 25 amps in the bright setting and shall have two separately protected and controlled circuits. Switches, electronic controls, or fireproofed rheostats may be used to control lighting.

3.9 CAB-BODY DRIVER COMPARTMENT AND EQUIPMENT.

3.9.1 DRIVER'S COMPARTMENT, CAB-BODY STRUCTURE.

All cab compartments shall be of sufficient size to accommodate a driver and passenger, with space to perform driving and control activities. The cab shall be organized and designed with the specified and required equipment and accessories for ease of operation and safety. There shall be a console convenient to driver in the drivers cab. The console shall contain all added switches for operation of the ambulance.

3.9.2 CAB-BODY PROVISIONS.

An OEM two door cab shall be furnished that is suitable for the subsequent mounting of various ambulance equipment and bodies.

Driver's cab section shall provide:

a. Forward hinged doors.
b. Opening side windows.
c. Door stops.
d. External key operated door locks with two sets of keys.
e. Trim or closed panels and headliner (washable vinyl upholstery, or flooring type materials).
f. Floor covering (OEM's heat, noise and appearance trim packages).
g. Panel mounted instruments.
n. All exposed interior surfaces shall be painted.
h. Armrests, mounted on each side door.

Source: https://assist.dla.mil -- Downloaded: 2016-12-11T08:17Z
Check the source to verify that this is the current version before use.

i. Key operated ignition/starter switch.
j. Fuel gauge(s).
k. Oil pressure gauge.
l. Engine temperature gauge.
m. Speedometer with odometer.
n. Environmental controls (heater-defroster/air conditioner, etc.).
o. Type II Seatbelts and shoulder harness for driver and passenger.
p. Cab lighting and controls.
q. Tinted windshield.
r. Dual electric horn(s).

3.9.3 CAB COMPARTMENT DRIVER AND PASSENGER SEAT.

The driver's compartment shall be OEM two individual bucket-type seats (driver and passenger). The seats shall be frame constructed with cushioned springs or foam rubber, padded and upholstered to provide riding comfort. The seats shall be covered with fire-retardant, washable, nonabsorbent material. Driver's seat shall have the OEM's full, unobstructed seat track travel range of longitudinal adjustment, and a minimum of 30% of the range of inclination, but not less than the angle furnished on the OEM's standard non-reclining high back seat.

3.9.4 CONTROLS AND OPERATING MECHANISM.

All controls and operating mechanisms shall be located for left-hand drive. Lever controls, equipment, items, and devices shall be installed, located, and stowed for the convenience of the purpose intended and shall not interfere with the EMSP or patient's ingress or egress of respective compartments.

3.9.5 OUTSIDE REARVIEW MIRRORS.

Dual rearview OEM mirrors having a combination flat/convex mirror system, shall be furnished. The mirrors shall be the largest available from the OEM. When available from the OEM, all four mirror head faces shall be independently adjustable. Hardware and mirror heads shall have a corrosion resistant exterior finish.

3.9.6 BUMPERS AND STEPS.

OEM's standard chrome bumper shall be furnished in the front of the chassis. The rear of the ambulance shall be furnished with a sturdy, full-width, rear bumper, with step secured to the vehicle's chassis-frame. The bumper-step shall be designed to prevent the accumulation of mud, ice, or snow and made of anti-skid open grating metal. These steps shall not be located or exposed to the interior of the ambulance when the door(s) are closed. All necessary steps shall be at least the width of the door opening for which they are provided. The step's tread shall have a minimum depth of 5" and a maximum depth of 10". If the step protrudes more than 7" from the rear of the vehicle, a fold up step shall be furnished. The rear bumper and step shall be adequate to support a test weight of 500 lbs. without flexing. The height of the rear step shall not exceed 22".

3.9.7 BODY PROTECTION.

3.9.7.1 FENDERS.

Fenders and wheel housings shall be provided to cover all tires.

Source: https://assist.dla.mil -- Downloaded: 2016-12-11T08:17Z
Check the source to verify that this is the current version before use.

3.9.7.2 MUD FLAPS.

Mud flaps, at least as wide as the tire(s), shall be provided behind the front and rear wheels and shall be reinforced at the point of attachment to the vehicle. Mud flaps may be incorporated into the running boards.

3.9.7.3 FUEL FILL SPLASH PLATES.

The painted surface of the ambulance body shall be protected from discoloration due to spilled fuel during refueling. Protection shall be provided by a drain in the fuel fill housing(s) or by splash plate(s) under the fuel fill opening.

3.9.8 ENGINE HOOD.

Engine hood and cowl shall be fitted to prevent precipitation, heat, odors, and noise from entering the interior of the cab and body. Cab compartment engine covers shall be removable for easy access to engine and components.

3.9.9 CAB CONNECTING BELLOWS FOR TYPE I & I AD VEHICLE.

A flexible, weather-tight bellows, fabricated from EPDM, Hypalon, sheet or molded rubber, or other durable materials that meet the temperature requirements herein and resist ozone, sunlight, oil, fungus, and will not crack, rot or deteriorate, shall be provided between the cab and the modular body. Bellows shall be designed for proper fit and finish and be able to absorb lateral, vertical, and torsional displacement due to body/cab movement.

3.10 AMBULANCE BODY AND PATIENT AREA.

3.10.1 BODY ACCOMMODATIONS.

The ambulance body and patient compartment shall be sufficient in size to transport occupants and all specified stretchers, cots, and litters. There shall be space around the patient(s) to permit an EMSP to administer life support treatment to the primary patient during transit.

3.10.2 CAB/PATIENT COMPARTMENT ACCESS WINDOW.

The ambulance and body bulkheads shall have an aligned window opening of at least 150 sq. in., for visual checking and voice communications between the cab and the patient's compartment for non-walk through vehicles. The window in the cab or body shall be of the sliding type, shall be aligned, and connect with the modular body window opening and shall conform to requirements of the partition. The window shall be latchable from the cab side and shall be an adjustable, transparent, shatterproof panel.

3.10.3 EMERGENCY MEDICAL SERVICES PROVIDER (EMSP) SEATING.

The EMSP shall be provided with a seat conforming to all applicable FMVSS Standards, and be equipped with a safety belt and a padded back and a padded headrest. The seat shall be not less than 15" deep by 18" wide and a minimum distance of 43" from the top of the padded seat to any overhead obstruction. The EMSP seat shall be located to allow for the care of the primary patient.

Source: https://assist.dla.mil -- Downloaded: 2016-12-11T08:17Z
Check the source to verify that this is the current version before use.

3.10.4 PATIENT COMPARTMENT INTERIOR DIMENSIONAL PARAMETERS.

The patient compartment shall provide a minimum of 325 cubic feet of space (275 cubic feet of space for a Type II), less volume for cabinets, while complying with the following:

a. The length measured from the partition to the inside edge of the rear loading doors at the floor, shall be at least 122". The compartment configuration shall provide at least 25" of unobstructed space at the head of the primary patient, measured from the face of the backrest of the EMSP seat to the nearest edge of the cot. A minimum of 10" shall be provided, from the rear edge of the cot mattress to the rear loading doors, to permit clearance for traction or long board splints.

b. The compartment shall provide a minimum of 12" of clear aisle walkway between the edge of the primary patient cot and base of the nearest vertical feature measured along the floor.

c. The patient compartment shall provide at least 60" height, over the primary patient area, measured from floor to ceiling panels.

3.10.5 BODY, GENERAL CONSTRUCTION.

For modular construction, the body shall be all welded aluminum or, other lightweight, inherently corrosion resistant materials of equal, or greater, strength. The exterior of the body shall be finished smooth with symmetrically radius corners and edges, and shall include doors and windows specified herein. Ambulance body, as a unit, shall be designed and built to provide impact and patient compartment penetration resistance and shall be of sufficient strength to support the entire weight of the fully loaded vehicle on its top or side, if overturned, without separation of joints or permanently deforming roof bow or reinforcements, body posts, doors, stringers, floor, inner linings, outer panels, rub-rails, and other reinforcements. Wood, or wood products, shall not be used for structural framing. As evidence that the ambulance body meets the above criteria, the FSAM's body (fabricated, modified, or converted), excluding the conventional cab, shall furnish for each body model (Type) a certification that the ambulance body meets AMD Standards No. 001, 020 & 007. Additionally, the roof structure, liner, and outer skin or cap shall be designed and constructed to prevent separation.

Any absorbent material such as carpeting, fabric, or inside/outside plastic type carpeting, etc. That resists cleaning and decontamination shall not be used.

3.10.6 AMBULANCE BODY STRUCTURE.

All parts of the ambulance body and attachments shall be fastened in a manner that will preclude loosening. All fasteners shall be of the corrosion resistant type. Cabinets, benches, partitions, oxygen cylinder holders, guide rails, and cot holders shall be attached to metal tapping plates and/or framing welded to the body structure. These components shall be fastened by welding, bolting, or self-tapping (threading) machine screws, on a minimum of 18" centers. Sheet metal, self-tapping wood/metal screws, nails, staples, etc. shall not be used in assembling the ambulance structure, except for self-threading sheet metal screws used for light trim panels and for retention of wood or composite sub-flooring. Ambulance bodies with an extended roof shall have the roof structural members permanently fastened to structural members of the body. Drip rail(s) shall be provided around the entire modular body and have drain points at each corner. Drip rails shall also be furnished over each entry and compartment door. The body, roof, and panel joints shall be watertight. All openings between the chassis-body and occupant carrying compartments shall be sealed to prevent intrusion of water, dust, and exhaust gases.

Source: https://assist.dla.mil -- Downloaded: 2016-12-11T08:17Z
Check the source to verify that this is the current version before use.

3.10.7 BODY MOUNTING.

On modular ambulance bodies, to reduce stress on body and frame, minimize height above the frame, and isolate the patient compartment from noise and vibration, full floating, automotive style, rubber body mounts shall be furnished. A minimum four body mounts per frame rail not to exceed the mechanical properties of the body mounts and fasteners shall be furnished. Fasteners shall be a minimum of Grade 8.

3.10.8 DOORS.

Two patient compartment door openings shall be provided.

1) There shall be a door opening on the right forward side and at the rear of the body for loading a patient on a cot.
   a) The side opening shall have a single forward hinged door for modular bodies.
   b) Double hinged doors for Type II, shall be furnished.
   c) Door(s) shall provide a minimum right side clear opening of 30" wide and of 63" high for modular bodies.
   d) The OEM's standard opening for Type II vehicles.
2) There shall be a door opening at the rear of the body for loading a patient on a cot.
   a) Rear loading door(s) shall cover a clear opening of not less than 46" in height for modular bodies.
   b) Minimum width of 44" for modular bodies.
   c) The OEM's standard rear door width opening for Type II vehicles.
3) All ambulance body doors shall be equipped with not less than 250 sq. in. of safety glass area per door.
4) Each door shall have effective compression or overlapping seals to prevent leakage of exhaust fumes, dust, water, and air.
5) Patient compartment doors, on modular bodies, shall be flush or near flush style.
   a) Shall be full box type construction.
   b) Have removable inner panel.
   c) Inner panel shall be finished with a durable, washable type material.
   d) Shall include trim moldings around all unfinished, exposed edges.
6) A reflective device shall be furnished in any color meeting the reflector or conspicuity systems requirements of FMVSS 108.
   a) Have at least 60 sq. in. of total reflective area.
   b) Shall be installed on the interior of all patient compartment entry doors.
   c) The reflective device shall be so positioned as to provide maximum visibility when the doors are in the fully open position.

3.10.8.1 PROTECTION OF PATIENTS AND CREW.

Upholstered padding/cushions shall be provided at the upper interior areas of the doorframes.

Source: https://assist.dla.mil -- Downloaded: 2016-12-11T08:17Z
Check the source to verify that this is the current version before use.

3.10.9 DOOR LATCHES, HINGES, AND HARDWARE.

1) Door latches, hinges, and hardware furnished by OEM and FSAMs shall comply with FMVSS 206.
2) When doors are open, the hinges, latches, and door-checks shall not protrude into the access area.
3) All doors shall have hardware or devices to prevent inadvertent closing.
4) To facilitate entry and exit from the vehicle, a minimum 6", tubular or semi-oval, minimum 3/4" wide (diameter), grab handle shall be provided on the inside of each door or the adjacent body structure (in addition to a door operating handle).
5) Door shall be equipped with hold opens or stops.
6) One external operated lock, with key per door opening, shall be provided.
7) All patient compartment door locks shall be identically keyed.
8) Hardware shall be weather resistant.

3.10.10 FLOOR.

1) The floor shall be flat, except when the area near the rear entrance door is sloped for a lower entering height.
2) With the exception of cot related hardware, shall be unencumbered in the door(s) access and work area.
3) Shall support a "Distributed Loads" Medium footprint of 400 lbs.
4) Metal floors shall be reinforced to eliminate "oil canning."
5) Floors shall be insulated against outside heat and cold.
6) The sub floor of the modular body patient compartment shall be water resistant.
7) When plywood is utilized, it shall be water resistant.
   a) Not less than 1/2" thick, 5 ply minimum.
   b) Shall be supported by body framework.
8) Under the sub floor of the modular body shall be an aluminum heat shield/splash pan, minimum 0.050", sealed with silicone or other non-hardening sealant evenly distributed around its perimeter.
9) The sub floor of the Type II patient compartment shall be not less than 1/2" thick density, marine or exterior grade plywood.
10) Fiberglass, aluminum, or other non-hydroscopic composites, with at least the equivalent strength of plywood may be used as the sub floor.
11) Particleboard or equivalent type materials are not acceptable.
12) Voids or pockets, where water or moisture can become trapped to cause rotting and unsanitary conditions, are not acceptable.
13) Voids and pockets shall be filled with sealer or caulking compound.
14) Flooring shall extend the full length and width of the patient compartment or body (including space under the cabinets, unless otherwise insulated) or prevented by exterior compartment bodies or wheel wells that extend above floor level.

Source: https://assist.dla.mil -- Downloaded: 2016-12-11T08:17Z
Check the source to verify that this is the current version before use.

3.10.11 FLOOR COVERINGS AND COLOR.

Floor covering shall be easily cleaned, sanitized, and harmonize with the interior color and décor of the patient compartment. The floor covering shall be seamless, one piece, no wax type, solid linoleum, vinyl, or poured epoxy or acrylic not less than 1/16" thick and permanently applied to the sub floor. The floor material shall cover the entire length and width of the compartment's working area. The covering of joints (corners, etc.), where the sidewalls and covering meet, shall be sealed and bordered with corrosion resistant cove molding or the covering shall extend at least 3" up the sidewalls.

3.10.12 STEP WELL (SIDE DOOR).

Steps shall be provided in the door openings. Step well shall be the enclosed two-step type. Height of the bottom step shall not exceed 22". Step wells shall be lighted, and all step surfaces shall be constructed with anti-slip material.

3.10.13 WHEEL HOUSINGS.

Wheel housings of modular bodies shall include metal or plastic splash shields between the body wheel housing and the wheels extending over the top of the tires to the bottom of the body side skirting. Wheel house openings shall allow for tire chain usage and easy tire removal and service. OEM's standard wheel housings will be acceptable.

3.10.14 BULKHEAD/ PARTITION FOR TYPE II, III, AND III AD VEHICLES.

A full height and width partition or bulkhead (with or without compartments), with a walkthrough opening with a door shall be placed between the driver and patient's compartment. This partition shall be located directly behind the driver and companion seats when in the rearmost position. The partition shall be secured on the sides, ceiling, and floor by welding or bolting to tapping plates.

3.10.14.1 DOOR / WALKTHROUGH FOR TYPE II, III, AND III AD VEHICLES.

The door opening shall be at least 17" wide and 46" high and shall provide an aisle between the compartments. The door shall have at least a 150 sq. in., transparent, shatterproof viewing panel in the center section at the driver's eye level. The door shall be secured with a driver's side self-latching device in the open and closed positions.

3.10.15 INSULATION.

The entire body, sides, ends, and roof of the patient's compartment shall be completely insulated to enhance the performance of the environmental systems and prevent external noise from entering the vehicle interior. The insulation shall be a non-settling type, vermin-proof, mildew-proof, fire retardant, non-toxic, and non-hygroscopic. If fiberglass insulation is used, it shall not be exposed to water, e.g. door panels.

Source: https://assist.dla.mil -- Downloaded: 2016-12-11T08:17Z
Check the source to verify that this is the current version before use.

3.10.16 INTERIOR SURFACES.

The interior of the body shall be free of all sharp projections. All hangers or supports for equipment and devices shall be mounted as flush as possible with the surrounding surface. Interior body lining and cabinetry materials, excluding the cab compartment, shall be selected to minimize dead weight.

The finish of the entire patient compartment, including interiors of storage cabinets, shall be:

1. impervious to soap, water and disinfectants.
2. mildew resistant.
3. fire resistant.
4. easily cleaned/disinfected (carpeting, cloth, and fabrics are not acceptable).

3.11 STORAGE COMPARTMENTS.

Storage compartments shall be furnished for all items required by this specification and/or specified by the purchaser and include storage for, but not be limited to; backboards, portable cots/litters, stair chairs, and any other specified patient handling devices. Any absorbent material such as carpeting, fabric, or inside/outside plastic type carpeting, etc. that resists cleaning and decontamination shall not be used in any storage or patient compartment.

3.11.1 INTERIOR STOWAGE ACCOMMODATIONS.

The interior of the patient compartment shall provide a minimum volume of 35 cubic feet of enclosed stowage cabinetry, compartment space, and shelf space which shall be conveniently located for medical supplies, devices, and installed systems as applicable for the service intended. The 35 cubic feet of enclosed stowage cabinetry requirement does not apply to type II ambulances. Enclosed compartments and spaces shall be located at, in, or on the partition, sidewalls, overhead, seating areas, and doors. Compartment(s) under the floor, with opening panel(s) inside the patient compartment, shall not be acceptable. When furnished, top opening squad bench lids shall be fitted with an automatic hold open device and a quick release slam type latching device when closed.

3.11.1.1 LOCATION OF MEDICAL EQUIPMENT AND SUPPLIES.

Supplies, devices, tools, etc., shall be stored in enclosed compartments and drawers designed to accommodate the respective items. All medical devices and equipment shall be stowed or properly fastened in/on the action area according to the medical device manufacturer's directions.

3.11.1.2 WASTE AND SHARPS DISPOSAL.

The following shall be furnished: A trash receptacle compartment, with closure over opening, for general waste shall be furnished with a plastic/rubber trash can and disposable plastic liners, with 12 spare liners. The trash compartment shall be accessible to the EMSP seat. A sharps receptacle compartment/storage or a commercially available container mounted in a convenient area shall be furnished for retention of a sharps container that meets OSHA requirements.

3.11.2 EXTERIOR STORAGE ACCOMMODATIONS.

Ambulance exterior storage compartments shall be weather resistant Exterior compartment doors and hardware shall be flush or near flush style construction. All doors shall have spring or gas tube type, hold open devices that permit one hand closure. Hardware (hinges, locks, latches, etc.) shall be rust resistant. All exterior compartments shall have latches with locks and shall be keyed alike. All exterior compartments shall be automatically lighted when opened.

Source: https://assist.dla.mil -- Downloaded: 2016-12-11T08:17Z
Check the source to verify that this is the current version before use.

3.11.3 STORAGE COMPARTMENTS AND CABINETS DESIGN.

Storage cabinets, drawers, and kits shall be easily opened but shall not come open in transit. For rapid identification of contents, medical supply cabinets above the litter patient shall have shatter-proof, transparent or lightly tinted, sliding doors.

1) Doors shall be provided with near flush grip, or low profile handles.
2) Storage compartments shall be divided into sections.
   a) Drawers shall be marine style slide or tilt.
   b) All shelves shall be removable.
3) Sliding doors for cabinets designed to carry lightweight items such as dressings, bandages, etc. shall be furnished.
   a) Shall automatically latch or be fitted with friction holding devices when in a closed position.
4) Doors shall have positively locked latches that are bolted to the door and the door frame structure and are designed to remain closed during transports.
5) All cabinets shall be firmly anchored (bolted or welded) to tapping plates of the body structure.
   a) Use of sheet metal or wood screws is not acceptable.
6) Tops of the cabinets and shelves shall be surrounded by a lip of not less than 1/2" in height covered in a soft, pliable molding.
7) Storage for the main oxygen cylinder shall be accessible for replacement from an outside position.
8) The oxygen compartment shall be provided with at least a 9 sq. in. of open vent to dissipate/vent leaking oxygen to the outside of the ambulance.
9) Oxygen cylinder compartment shall not be utilized for storage of any other equipment.
10) Oxygen cylinder(s) shall be mounted with a restraining device(s).

3.11.4 PATIENT COMPARTMENT SEATING.

All seats in the patient compartment shall conform to applicable FMVSS Standards, will be padded and have the largest practical padded back and headrests. Padding material shall be rubber or polyester urethane foam of a medium to firm density, with a minimum finished thickness (padding and upholstery) of 2.5" for seat pads, and 2" for head and backrests. All padding and upholstery shall be fire retardant. The upholstery shall be non-absorbent, washable and impervious to disinfectants. Non-OEM seats shall have 40 oz. (minimum) reinforced vinyl upholstery. To facilitate cleaning and disinfecting, all seats furnished and installed by the FSAM shall be cleanable to OSHA standards, and all exposed surfaces shall be free of vent devices that would permit the entrapment of biological contaminates.

All seating positions in the patient compartment shall be provided with a vertical overhead clearance measurement of 43".

3.11.4.1 PATIENT SEATING.

The seats shall provide seating space for two persons and shall not be less than 15" deep by 18" wide (per seating position), and the seat backs shall be a minimum of 18" wide by 7" tall. The requirement to provide patient seating space for two persons shall not apply to Type II ambulances.

3.11.5 SEAT SAFETY BELTS AND ANCHORAGES.

All designated seating positions in the patient compartment shall be equipped with safety restraint systems appropriate for each type of seating configuration.

Source: https://assist.dla.mil -- Downloaded: 2016-12-11T08:17Z
Check the source to verify that this is the current version before use.

3.11.6 LITTER FASTENERS AND ANCHORAGES.

A cot fastener assembly with quick release latch shall be furnished. The installed cot fastener device(s) for wheeled cots shall be installed per the manufacturer's directions. At a minimum, the litter retention system, anchorages, and litter fastener(s) shall not fail or release when subjected to a force of 2,200 pounds applied in the longitudinal, lateral, and vertical direction. Should the manufacturer of the cot fastener assembly specify a greater force, the litter retention system, anchorages, and litter fastener(s) shall be tested to that greater force.

ALL COTS AND INFANT TRANSPORTERS SHOULD ONLY BE USED WITH THE REQUIRED FASTENER ASSEMBY AS PRESCRIBED BY THE COT/TRANSPORTER MANUFACTURER.

3.11.7 IV HOLDER FOR INTRAVENOUS FLUID CONTAINERS.

One ceiling mounted "hook" style device specifically designed for holding IV containers shall be provided, including Velcro type straps to adequately secure an IV bag/bottle. The device shall not protrude more than 1", and shall be located adjacent to, or on the cabinetry near the head of the primary patient. Swing down IV hangers with rigid support arms that can cause injury shall not be specified or furnished.

3.12 OXYGEN, MAIN SUPPLY AND INSTALLATION.

The ambulance shall have a piped medical oxygen system capable of storing and supplying a minimum of 3,000 liters of medical oxygen. The installed medical oxygen piping and outlet system shall be leak tested to 200 PSI. After the successful completion of tests, the system shall be capped then tagged with date and signature of person and firm performing the tests.

The main oxygen supply shall be from a single compressed gas cylinder that the consignee will provide and install at the time the vehicle is placed in service. A cylinder changing wrench shall be furnished. The wrench shall be chained and clipped within the oxygen cylinder compartment.

The cylinder controls shall be accessible from the inside the vehicle. A device shall be visible from the EMSP's seat that indicates cylinder pressure. The use of remote high pressure lines and gauges are not allowed. The oxygen cylinder shall be accessible for changing from the exterior of the body.

The purchaser shall specify the type of quick disconnect, to be used. The FSAM shall install all other components and accessories required for the piped oxygen system which shall include as a minimum:

- A pressure regulator.
- Low pressure, electrically conductive, hose approved for medical oxygen.
- Oxygen piping concealed and not exposed to the elements, securely supported to prevent damage, and be readily accessible for inspection and replacement.
- Oxygen piped to a self-sealing duplex oxygen outlet station for the primary patient with a minimum flow rate of 100 LPM at the outlet.
- Outlets shall be adequately marked and identified and not interfere with the suction outlet.

Source: https://assist.dla.mil -- Downloaded: 2016-12-11T08:17Z
Check the source to verify that this is the current version before use.

3.12.1 OXYGEN PRESSURE REGULATOR.

The medical, oxygen pressure reducing, and regulating valve with inlet filter at the cylinder shall have line relief valve set at 200 psi maximum, and a gauge or digital monitor with a minimum range of 0 to 2,500 psi with the gauge or display scale graduated in not more than 100 PSI increments. The regulator shall be easy to connect and preset, with a locking adjustment, at 50 +/- 5 psi line pressure, permitting a minimum 100 LPM flow rate at a bottle pressure of 150 psi.

3.12.2 SUCTION ASPIRATOR, PRIMARY PATIENT.

An electrically powered suction aspirator system shall be furnished with an illuminated switch and a panel mounted, labeled, quick disconnect inlet device on the EMSP panel. The electric type aspirator system shall be connected per Figure 3. The suction pump shall be located in an area that is accessible but sound and vibration insulated from the patient compartment.

1) The pump shall be vented to the vehicle's exterior.
2) A vacuum control and a shut-off valve, or combination thereof, shall be provided to adjust vacuum levels.
3) A vacuum indicator gauge of 3" +/-0.5" in diameter, with numerical markers at least every 100 mm Hg and a total range of 0 to 760 mm Hg, shall be provided.
4) The collection bottle or bag shall be non-breakable and transparent with a minimum 1,000 ml capacity.
5) The minimum inside diameter for the suction tubing connectors shall be at least 1/4". The end user shall provide any suctioning catheters desired.
(6) The suction aspirator system shall provide a minimum of 30 LPM flow at the catheter tip.

3.13 ENVIRONMENTAL: CLIMATIC AND NOISE PARAMETERS.

3.13.1 ENVIRONMENTAL SYSTEMS.

All ambulances will be equipped with a complete heating, ventilating, and air conditioning system(s) (HVAC) to supply and maintain clean air conditions and specified level of inside temperature in both driver and patient compartments. The system(s) may be separate or a combination system, which will permit independent control of the environment within the driver's cab and patient compartment. All ambulances will be equipped with HVAC that can be made to collectively operate using re-circulated air and outside ambient air and will be capable of maintaining a patient compartment temperature of 68°F to 78°F while patients are in the patient compartment. The air systems will be high volume capacity with low velocity delivery for minimum draft circulation. Environmental system components will be readily accessible for servicing at the installed location(s). Connecting hoses for heating and the air conditioning system will be supported by rubber-insulated metal clamping devices at least every 18".

3.13.2 HEATING CRITERIA.

The heating system(s) will have sufficient capacity to maintain the temperature in the patient compartment at a minimum dry bulb temperature of 68°F. Heater(s) will, to the maximum extent possible, be connected to the OEM's furnished interconnection points.

Source: https://assist.dla.mil -- Downloaded: 2016-12-11T08:17Z
Check the source to verify that this is the current version before use.

3.13.3 AIR CONDITIONING CRITERIA.

The air conditioning system(s) will have sufficient capacity to maintain the temperature in the patient compartment at a maximum dry bulb temperature of 78°F. When available, OEMs' interconnection points will be utilized.

3.13.4 VENTILATION CRITERIA.

Ventilation system(s) of the driver and patient compartments will provide a complete change of ambient air within both compartments at least every two minutes with the vehicle stationary. Ventilation will be separately controlled within the cab and patient compartments. Fresh air intakes will be located towards the front of the vehicle and exhaust vents will be located on the upper rear of the vehicle. Exhaust vents may be located on the rear lower half of the module/body, provided the vent/device incorporates a reverse flow damper to prevent back draft and intrusion of vehicle engine exhaust, dust, dirt, or road spray. The patient compartment will be ventilated by the air delivery system of the environmental equipment (heater-air conditioner) or by separate system(s), such as power intake, exhaust ventilator(s).

3.13.5 ENVIRONMENTAL CONTROLS.

Adjustable, manual or thermostatically operative controls will permit heating and/or air conditioning and ventilation in either compartment without affecting the other compartment. Switches and controls will be located in "action area" panel and/or remote panel and identified for function and operating position. Blower or fan system will have at least three speeds (excluding "OFF"). Separate non-corroding brass, bronze, stainless steel, plastic or other inherently corrosion proof shutoff valves, for the patient compartment hot water heating system, will be provided. The use of vacuum or electrically operated shutoff valves is acceptable provided it will meet the above criteria and the valve provides inherent sealing when vacuum is removed. This sealing will prevent engine cooling system pressure and water pump pressure from causing any leakage when vacuum is removed. Air systems will have adjustable louvers to direct the flow of air.

3.13.6 PATIENT COMPARTMENT SOUND LEVEL CRITERIA.

The patient compartment sound level shall not exceed 80 dBA at any time.

3.14 COMMUNICATIONS.

3.14.1 COMMUNICATION EQUIPMENT.

Any two way radio equipment shall be installed by a licensed installer approved by the radio manufacturer. Communications equipment will meet the applicable FCC rules and required state and local area EMS radio communication protocols.

3.14.2 RADIO (MOBILE) PROVISIONS.

All ambulances will be provided with sufficient ventilated space for a two-way radio (including convenience features), antenna openings, ground plane, terminal wiring for 12V power and ground.

Source: https://assist.dla.mil -- Downloaded: 2016-12-11T08:17Z
Check the source to verify that this is the current version before use.

3.14.3 ANTENNA CABLE, AND ACCESS.

The FSAM shall provide each ambulance with a ground plane, and coaxial lead-in wire from the ventilated radio storage area/compartment to the centerline of the patient compartment roof. An antenna wiring access/port shall be provided in the patient's compartment directly under the coaxial leads. The port shall provide a least a 16 sq. in. clear access. All nonmetallic roofs will be equipped with at least a 40" x 40" metal ground plane molded into the roof. The ground plane then shall be properly grounded to the chassis ground. The antenna cable (lead-in) shall be provided and clearly labeled with RG/58U or equal cable. Approximately 18" of extra cable shall be provided at the roof and approximately 36" at/in the radio area/compartment.

3.14.4 SIREN – PUBLIC ADDRESS SYSTEM.

A combination electronic siren with integral public address system including radio interface capability shall be provided. A "Horn/Siren" switch shall be provided on the driver's console. When on shall activate or change the siren tone when the horn button is pushed. The "Horn/Siren" switch shall be illuminated (in siren mode). Dual speakers shall be installed, outside the vehicle, in the bumper/hood area. Speakers shall not protrude beyond the face of the bumper or bumper guards. The siren shall be capable of producing a continuous warning sound at a minimum level of 123 dB, A-weighted, at 10'.

3.15 ADDITIONAL SYSTEMS, EQUIPMENT, ACCESSORIES, AND SUPPLIES.

3.15.1 ADDITIONAL AND OPTIONAL EQUIPMENT.

This specification provides the minimum technical requirements that new ambulances are required to meet. Some purchasers will require features in excess of these minimum requirements to complete their mission(s). Completing the worksheet in this section will assist purchasers in determining the optimum type, configuration and optional equipment required.

Purchasers may wish to consider some of the following criteria before completing the worksheet:

1. Operating environments such as inner city, rural areas, length of responses
2. Exposure to extreme ambient temperatures
3. Size of ambulance crew
4. State and/or local jurisdiction required medical equipment
5. State licensure requirements
6. Vehicle size and weight limitations in the response area
7. Expected service life of the ambulance
8. Additional non EMS equipment that must be carried on the ambulance
9. Future equipment requirements
10. Additional state or local requirements
11. Export requirements

In no event shall the specified or furnished optional item(s) reduce the quality and intent of the ambulance but shall enhance its design and purpose.

Source: https://assist.dla.mil -- Downloaded: 2016-12-11T08:17Z
Check the source to verify that this is the current version before use.

3.15.2 STANDARD MANDATORY MISCELLANEOUS EQUIPMENT.

Each ambulance shall be equipped with, but not limited to the following:

1. Fire extinguishers: Two, (ABC dry chemical or carbon dioxide) minimum 5 lb. unit, in a quick-release bracket, one mounted in the driver/cab compartment or in the body reachable from outside the vehicle and one in the patient compartment.
2. "No Smoking Oxygen Equipped" and "Fasten Seat Belts" signs: Conspicuously placed in the cab and patient compartment.
3. Overhead grab rail, minimum 60" long, maximum 4" depth, on the ceiling over the primary patient. Grab rail shall be stainless steel, aluminum, or other corrosion resistant material, and have padded or curved up ends, and rounded corners. Mounting brackets shall be chromed, stainless steel, polished cast aluminum or other corrosion resistant materials. The grab rail shall be tested to 300 lbs.
4. Backup alert alarm, (audible warning device) activated when the vehicle is shifted into reverse. Device shall be rated (SAE) for 97 dB-a at 4'.

Source: https://assist.dla.mil -- Downloaded: 2016-12-11T08:17Z
Check the source to verify that this is the current version before use.

3.15.3 CONFIGURATION WORKSHEET.

Reference Section 3.0 – REQUIREMENTS

This ambulance is to be a:

- ☐ BLS
- ☐ ALS
- ☐ Walkthrough
- ☐ Infrequent Transport

It is essential that the ambulance not be operated in an overloaded or unbalanced condition. The following information must be made available to properly design the interior and exterior compartmentalization of the ambulance per Section 3.5. Attach:

a. A list of medical and rescue equipment to be supplied by the FSAM with the ambulance stating the item, quantity, where it is to be mounted or carried, the weight of each item, and its dimensions (L x W x H).

b. A list of medical and rescue equipment to be supplied by the purchaser to be carried on the ambulance stating the item, quantity, where it is to be mounted or carried, FSAM's responsibility for mounting, the weight of each item, and its dimensions (L x W x H).

c. A list of medical and rescue equipment that might be carried on the ambulance in the future stating the item, quantity, the desired mounting location or compartment where it is likely to be carried, the weight of each item, and its dimensions (L x W x H).

d. A list of permanently mounted equipment required on the ambulance showing the item, quantity, weight of each, and dimensions (L x W x H), who is to furnish the equipment as well as the location where it is to be carried.

1. Specify the maximum number of seated positions on the ambulance if more than five for modular bodies, or more than three for Type II units (Standard seating is two in the cab, two on the side and one in the EMSP seat for modular bodies and two in the cab and one in the EMSP seat for Type II units):

2. Describe the usage duty cycle that the ambulance will be subjected to: _____

_____

3. If design approval drawings and/or a copy of the FSAM's work order are required to validate the design criteria in 3.1, the type and quantity must be detailed here. _____

_____

4. Careful consideration must be given to the ambient conditions the ambulance will operate in. Auxiliary heating and/or air conditioning may be required. If different than 3.4.2 and/or 3.13.1, state the minimum and/or maximum operating temperatures in °F. _____

5. If different than 3.4.4, state the required ride performance requirements: _____

_____

6. If different than 3.4.5, state the required min/max road speed required: _____

_____

7. If different than 3.4.7, state the required gradeability: _____

Source: https://assist.dla.mil -- Downloaded: 2016-12-11T08:17Z
Check the source to verify that this is the current version before use.

8. If different than 3.4.8, state the required fuel range:_____

9. Per 3.4.10.1, state the maximum overall length in inches:_____

10. If different than 3.4.10.2, state the maximum overall width in inches:_____

11. Per 3.4.10.3, state the maximum overall height in inches:_____

12. If different than 3.4.10.4, state the required angles:_____

13. Per 3.5.2, the average weight of an occupant is calculated at 150 lbs. per NHTSA. If your average occupant weight is greater, specify here:_____

_____

14. If a specific OEM's chassis is required in Section 3.6, list the OEM here:

_____

_____

15. If all-wheel drive (AWD) or all-wheel drive conversion (AWDC) is required specify here. (It should be noted that AWD and AWDC will reduce the available payload and will increase the floor loading height. In some cases the floor loading height may be increased beyond the 34" maximum).

_____

_____

16. A diesel engine is furnished as standard per 3.6.3. If other than a diesel engine is to be used, specify here. If a specific engine type is required, specify here: _____

_____

17. The OEM standard exhaust location and piping configuration is required per 3.6.4.6. If an alternate location of type of piping termination is required, specify here: _____

_____

18. An automatic transmission is furnished as standard per 3.6.5.2. If a specific transmission type is required, specify here: _____

_____

19. The OEM standard braking system is required per 3.6.5.4. If an optional type braking system is required (air brakes, retarder, exhaust brake, etc.), specify here: _____

_____

20. The OEM standard tires are furnished per Section 3.6.8. If an optional type tire is required, specify here. If a spare tire is required, specify mounting location here: _____

_____

21. If automatic or manual tire chains are to be furnished to operate in the space required by 3.6.9, specify here: _____

_____

Source: https://assist.dla.mil -- Downloaded: 2016-12-11T08:17Z
Check the source to verify that this is the current version before use.

22. If different than 3.7.5, specify the type of horn (air horn, etc.) required: _____

23. Specify any electrical loads beyond those defined in 3.7.6 that are to be part of the minimum continuous electrical load. If a load management system is required, specify the sequence of control (shutdown). If functional enhancements (OEM or non OEM) are required to the high-idle system (interlock capabilities, automatic re-engagement, etc) specify here: _____

24. The OEM standard batteries are furnished per Section 3.7.7. If an optional type battery is required, specify here. If a specific mounting location is required, specify here: _____

25. Specify any portable equipment charging provisions required in excess of those required by 3.7.7.2: _____

26. If different than 3.7.7.3, specify the number and type of power points required: _____

27. Specify any AC utility power requirements that are in excess of those required in 3.7.8: _____

28. If an on board AC power system is required to operate with the system described in 3.7.8, the following must be specified:

Wattage of power source: _____
Voltage of power source: _____
Purity of power source: _____
(allowable total harmonic distortion, voltage variation, power factor, frequency variation, etc)

Type of power source (shall be listed by a nationally recognized testing laboratory UL, CSA, etc):

- ☐ Portable Generator
- ☐ Hydraulically Driven Generator
- ☐ Direct Drive Generator
- ☐ Auxiliary Engine Driven Generator
- ☐ Belt Driven Generator or Alternator
- ☐ Derived From Ambulance Low Voltage Power Supply System (Inverter)
- ☐ Other: _____

Make, model, or other details of power source: _____

Panelboard location: _____

Source: https://assist.dla.mil -- Downloaded: 2016-12-11T08:17Z
Check the source to verify that this is the current version before use.

AC Powered Receptacle Information

Quantity	NEMA Conf	Location

AC Powered Lighting Information

Style/Make	Location	Wattage/Bulb	Type Mounting

An automatic transfer switch shall be furnished which turns off this onboard AC supply (interlock) and disconnects its output, when the AC utility power is applied. Transfer equipment, if not integral with the listed power source, shall be installed to ensure that the current carrying conductors from the on board 125-volt AC power source and from the 125-volt AC utility power source are not connected to ambulance electrical circuit at the same time. Generators shall comply with Article 445, "Generators," of NFPA 70, National Electrical Code.

The following shall be wired so that they can be energized only from the utility power, and not the onboard AC supply:

1. DC battery conditioner
2. Engine block heater

29. If different than 3.7.8.1, specify the location for the utility power connector: _____

_____

30. If known, specify the equipment that is to be powered by the receptacles specified in 3.7.8.2:

_____

31. If different than 3.7.10, specify the location(s) for the patient compartment controls: _____

_____

32. If a specific manufacturer's DOT lighting system is required in Section 3.8.1, list the manufacturer here. State if a specific lighting system is required (such as all LED, etc.): _____

_____

Source: https://assist.dla.mil -- Downloaded: 2016-12-11T08:17Z
Check the source to verify that this is the current version before use.

33. If a specific manufacturer's emergency lighting system is required in Section 3.8.2, list the manufacturer and type (i.e.: strobe, LED, halogen) here. State if an alternate approved lighting system is required (such as NFPA 1901 compliant or SAE J2498 compliant). State if there are specific state or local jurisdiction requirements (such as California steady burning red, etc): _____

34. Specify any work lighting required beyond those defined in 3.8.3: _____

35. Specify any interior lighting required beyond that defined in 3.8.4 (map light, high intensity cot light, etc.): _____

36. The FSAM's standard cab console will be provided per 3.9.1. If an optional type console is required (specific switch locations, specific size, etc.) specify here: _____

37. The OEM largest mirror system is required per 3.9.5. If an optional type mirror system is required (power, heated, etc) specify here: _____

38. If different than 3.10.4, state the required increase to the patient compartment interior length, width and height in inches: _____

39. A cab/patient compartment access window is required per 3.10.2. On vehicles over 14,000 lbs. GVWR the opening may be expanded to permit a walk through opening in lieu of the window. If a walk through opening is required, specify the door type and size here: _____

40. An aluminum modular body is required per 3.10.5. If an optional type body material is required specify here: _____

41. Hinged doors are required per 3.10.8. If an optional type door system is required (sliding, etc) specify here: _____

42. If a specific manufacturer's latch, locking system, grab handle system, etc. is required in Section 3.10.9, list the manufacturer and type here: _____

43. The floor is designed to carry a cot load of 400 pounds per 3.10.10. If a heavier load is to be applied to the floor (Bariatrics, etc) specify here: _____

44. If a specific manufacturer's flooring is required in Section 3.10.11, list the manufacturer and flooring type here: _____

Source: https://assist.dla.mil -- Downloaded: 2016-12-11T08:17Z
Check the source to verify that this is the current version before use.

45. Windows are required per 3.10.5. If an optional window and/or tint is required specify here:

_____

46. All exterior compartments must be lighted per 3.11.2. If additional compartment lighting is required, specify here: _____

_____

47. Removable shelving is required per 3.11.3. If optional type shelving is required (adjustable, quick loading, etc) specify here: _____

_____

48. Patient compartment seating is required per 3.11.4. If an optional type seating is required (captain's chair, integral child safety seat, etc) specify here: _____

_____

49. A cot fastener assembly is required per 3.11.6. Specify the type of cot to be fastened by manufacturer and model number. If a cot is to be furnished by the FSAM, specify the manufacturer and model number of the cot to be furnished: _____

_____

50. A medical oxygen system is required per 3.12. Specify the type of outlets (DISS, NCG, Chemtron, Ohmeda, Puritan Bennett, etc) to be furnished. Specify the type and size of oxygen cylinder that will be furnished by the end user. If additional oxygen equipment is to be furnished by the FSAM, specify the manufacturer and model number to be furnished. If additional oxygen storage (more than 3000 liters) is required, specify here: _____

_____

51. The patient compartment interior sound levels are not to exceed 80 dB per 3.13.6. If lower sound levels are required specify here: _____

_____

52. If electronic communication between the patient compartment and the cab (silent intercom, voice intercom, headsets integrated with the radio system, etc) are required specify here: _____

_____

53. Provisions for mobile radio equipment are defined in 3.14.2. Complete the following:
Is the FSAM to provide the radio? ☐ Yes ☐ No
Is the FSAM to install the radio? ☐ Yes ☐ No
Make and model: _____
Power requirements for radio: _____
Mounting location for radio: _____
Mounting location for control(s) and speaker(s): _____

54. Are there provisions required for computer equipment, drive camera, or other electronics? If so, list here:

_____

Source: https://assist.dla.mil -- Downloaded: 2016-12-11T08:17Z
Check the source to verify that this is the current version before use.

55. If a specific manufacturer's siren and/or control system is required in Section 3.14.4, list the manufacturer here: _____

_____

56. Specify any additional backup assist systems required beyond those defined in 3.15.2-4:

_____

_____

57. The ambulance will be painted and marked per 3.16. State if an alternate approved painting and/or marking system is required (such as NFPA compliant and/or specific state or local jurisdiction requirements). A graphic design meeting the reflectivity requirements of 3.16.4 shall be permitted to replace the required striping material if the design covers at least the same perimeter length and total area of coverage in sq. in. required by 3.16: _____

_____

58. Each ambulance comes with an instruction manual and handbook of construction per 3.18. These documents are designed to insure that the operator of the ambulance can properly operate and perform required operator level maintenance specific to the ambulance purchased. If additional operational instruction and/or maintenance instruction is required, those requirements should be detailed here. If actual service and parts manuals are required, those requirements should be detailed here. With a few exceptions, the manual and handbook of instruction will be in electronic form. If other media is required (all paper, etc.) specify here: _____

_____

Reference Section 4.0 – QUALITY ASSURANCE PROVISIONS

The type of inspection (source and/or destination) needs to be specified as well as where and when the acceptance inspection is to occur. _____

Section 4.0 details the minimum testing requirements for acceptance. If additional or alternative testing is required, specify here: _____

_____

Section 4.3.3 requires 3rd party testing. If an alternate form of 3rd party validation of the testing is required, specify here: _____

_____

Reference Section 5.0 – PREPARATION FOR DELIVERY

If a different mode of delivery or preparation for delivery than is specified in Section 5.0 the requirements should be detailed here along with the delivery address for the ambulance. _____

_____

Reference Section 6.0 – NOTES

If an extended warranty (beyond what is required in 6.2.1) on the entire vehicle or specific components is required, indicate which component(s) and the length and scope of the warranty:

_____

_____

Source: https://assist.dla.mil -- Downloaded: 2016-12-11T08:17Z
Check the source to verify that this is the current version before use.

3.15.4 DEFINED OPTIONS (OPTION CODES).

The following Option Code detailed requirements are offered for selected ambulance options.

3.15.4.1 CODE "SL" SPOTLIGHT.

A hand held spotlight shall be provided with a minimum 100,000 CP lamp, corrosion proof housing with momentary switch, and minimum 8 ft. heavy-duty coiled cord. It shall be hard wired to the vehicle 12-volt DC system (for anti-theft reasons) and stowed in a holder in a compartment/area, accessible to the driver and passenger.

3.15.4.2 CODE "HPL" PADDLE HANDLE DOOR LATCHES.

When code HPL is specified, a large automotive paddle style door handle shall be furnished for the patient entry and exterior compartment doors. The handle shall be chrome or bright metal finished and shall have a black outer trim gasket. Each handle shall be easily gripped with a gloved hand. The patient entry doors and exterior compartment doors shall be keyed alike.

3.15.4.3 CODE "K40" SERVICE BEFORE OVERSEAS.

When option K40 is specified, vehicles scheduled for overseas delivery shall be shipped to the FSAM's service center closest to the port of shipment. The service center shall ensure that the following services are performed:

1. A 3000 mile chassis service.
2. The OEM and Conversion equipment functions on the predelivery check list shall be successfully completed.
3. All open warranty items discovered as a part of this service shall be resolved.
4. The dealer shall deliver the vehicle to the port of shipment when the required services have been completed.

3.15.4.4 CODE "PLV" POWER LOCKS ON BODY.

When code PLV is specified, the side and rear patient entry doors as well as the front exterior ALS access door shall be equipped with electrically activated locks. These locks shall be interconnected to the OEM electric locks so that patient compartment and ALS access areas may be secured anytime the cab is locked. There shall further be a momentary activation switch located to the rear of the side wall adjacent to the rear patient entry doors. Switch shall be labeled Door Locks. Additionally there will be a rubber covered, weatherproof "stealth" switch that will unlock both the cab entry doors as well as the patient compartment entry doors. Switch shall be located in the front grille area.

3.15.4.5 CODE "PSM & PSME" PARTS AND SERVICE MANUALS.

When PSM or PSME is specified, the FSAM shall furnish all parts lists and service publications for the vehicle and all equipment furnished.

When PSM is specified, the publications furnished shall be printed documents.

When PSME is specified, the publications shall be electronic (CD or web-based).

NOTE: The publications may be shipped separately from the vehicle. The publications may be shipped to the consignee mailing address as shown on the Motor Vehicle Delivery Order (MVDO).

Source: https://assist.dla.mil -- Downloaded: 2016-12-11T08:17Z
Check the source to verify that this is the current version before use.

3.15.4.6 CODE "SROV" REVERSE OBSTACLE SENSOR.

When code SROV is specified, the vehicle shall be furnished with a sensor system that is installed on the rear of the body or rear bumper of the vehicle and detects the proximity of objects and transmits an audible signal to the driver. A switch shall be furnished that allows the driver to turn this device on/off.

3.15.4.7 CODES "AWD & K02" OEM ALL WHEEL DRIVE.

When Option AWD is specified, the OEM 4X4 chassis shall be furnished per specification. When Option K02A is additionally specified, the chassis shall have OEM automatic electric "shift on the fly" system.

3.15.4.8 CODE "K11" REAR AIR RIDE SUSPENSION.

When Option K11 is specified, OEM's furnished or approved rear air suspension, with electrically operated dump valve, shall be furnished. The air ride suspension system shall incorporate an interlock system that prevents the vehicle from moving while the system is in the "dumped" configuration.

3.15.4.9 CODE "K37" ADDITIONAL 12-VOLT POWER LEAD.

When K37 is specified, an additional lead shall be furnished to a specified location. All leads shall be tagged.

3.15.4.10 CODE "K32" ADDITIONAL ANTENNA & POWER LEAD.

When Option K32 is specified, an additional antenna and an additional power lead shall be furnished to a specified location. All leads shall be tagged.

3.15.4.11 CODE "K27" TEMPERATURE CONTROLLED DRUG COMPARTMENT.

When K27 is specified, a temperature controlled drug compartment shall be furnished to maintain temperatures 77°F +or– 10°F. with the vehicle exposed to the ambient temperatures in 3.4.2. The electrical power for the cooling/heating shall be from the power output in Figure 3 and Figure 4.

3.15.4.12 CODE "K49" AC/12-VOLT HEAT & AC COMB.

When code K49 is specified, the climate control system in the patient compartment shall be capable of operating from either AC power supplied by a shoreline input or the 12-volt D.C. power supplied by the OEM chassis. The AC portion of the system shall include an auto-eject shoreline input outlet located on the street side of the vehicle and adjacent to the standard shoreline outlet. The AC input shall activate an additional air conditioning compressor and condenser as well as an AC to 12-volt converter that will power the air conditioner blower motors inside the patient compartment. The AC portion of the heating and cooling system shall be connected to the interior heat/cool thermostat located in the action area.

3.15.4.13 CODE "K28" CAST ALUMINUM EMERGENCY LIGHT HOUSINGS.

When code K28 is specified, all exterior emergency and flood lights shall be flush mounted in cast, polished, aluminum housings and recessed to the maximum extent possible.

3.15.4.14 CODE "FTH" FRONT TOW HOOKS.

When code FTH is specified, the OEM's front recovery hooks shall be frame mounted on the front of the vehicle. The OEM's front recovery hooks shall be provided on all 4x4 vehicles.

Source: https://assist.dla.mil -- Downloaded: 2016-12-11T08:17Z
Check the source to verify that this is the current version before use.

3.15.4.15 CODE "PT" POWER TAKEOFF OPENING.

When code PT is specified, the designated transmission or transfer case shall be provided with a usable PTO opening. When a PTO unit is provided on a vehicle, a caution plate or decal reading, "Do not operate vehicle at highway speeds with PTO engaged," shall be installed in the cab, readily visible to the driver. Controls to operate the power takeoff shall be located in the truck cab accessible to the seated driver. The PTO unit shall have a rated capacity to operate the provided equipment.

3.15.4.16 CODE "PWL" POWER WINDOWS AND LOCKS.

When code PWL is specified, the OEM power windows and power locks option shall be provided.

3.15.4.17 CODES "RA, RAD & RACD".

When code RA is specified, the OEM AM/FM radio with integrated clock shall be provided.

When code RAD is specified, the OEM AM/FM/clock radio with integrated compact disc player shall be provided.

When code RACD is specified, the OEM AM/FM/clock radio with integrated compact disc and cassette player shall be provided.

3.15.4.18 CODE "RKE" REMOTE KEYLESS ENTRY.

When code RKE is specified, the OEM optional remote keyless entry system shall be furnished.

3.15.4.19 CODES "T5", AND "T6", FIVE, AND SIX SPEED MANUAL TRANSMISSION.

When code T5, or T6 is specified, a five, or six speed manual transmission, respectively, shall be furnished. The transmission shall be furnished with a PTO opening(s) in accordance with SAE J704, unless an exception is noted under the code.

3.15.4.20 CODE "AWDC" FOUR WHEEL DRIVE (4X4) CONVERSION.

(From OEM Pass-Through Approved Dealers Only)

When code AWDC is specified, an OEM pass-through four-wheel drive conversion shall be furnished. The conversion (4x4) shall be a professionally engineered conversion from a two-wheel drive (4x2) to a four-wheel drive (4x4) meeting or exceeding all applicable requirements of the OEM. Note that available payload will likely be reduced by the weight of the conversion and all payload requirements must be reviewed accordingly prior to contract.

The transfer case selector shall have a readily visible shift diagram, if applicable, and a position indicator. A yellow, dash mounted four-wheel drive warning light shall be provided in close proximity to permanent warning decal or metal plate advising conditions under which four-wheel drive shall not be used. A dash mounted metal plate or permanent decal indicating the proper procedure for engaging and disengaging the four-wheel drive shall be provided. The front drive axle hubs shall be manually engaged. Each vehicle's rear axle shall be furnished with chassis manufacturer's special traction differential (option code D3) when available.

The 4x4 converter shall provide to the purchaser a full parts and labor warranty covering all added 4x4 parts and materials, including workmanship and design. The warranty shall also cover all OEM components affected or modified by the conversion process. This warranty shall be at least equivalent, in mileage and time, to the chassis manufacturer's original warranty, including any extended warranties required or furnished.

Source: https://assist.dla.mil -- Downloaded: 2016-12-11T08:17Z
Check the source to verify that this is the current version before use.

3.15.4.21 CODE "RBV" RUNNING BOARD.

When code RBV is specified, OEM running boards (Code RB) or FSAM running boards shall be furnished. The FSAM running boards shall be securely mounted to the frame of the vehicle to prevent flexing when used by vehicle occupants during entry and exit.

3.15.4.22 CODE "LEDV" BODY EXTERIOR DOT LIGHTING, LED.

When code LEDV is specified, the exterior DOT lighting furnished, other than the backup lamp(s), shall be LED. The lighting system shall include sealed wiring harness with return ground wiring.

The LED lights shall have a five year warranty as a minimum.

3.15.4.23 CODE "SRP" RUSTPROOFING PER FED-STD 297E.

When code SRP is specified, the vehicle shall be rust proofed in accordance with FED-STD 297E

3.15.4.24 CODE "CPT" PAINT-CUSTOM COLOR.

This option must be specified when ordering paint colors other than the standard white. The required color(s) must be stated.

3.15.4.25 CODE "UCT" UNDERCOATING.

When code UCT is specified, the vehicle shall be undercoated be undercoated for sound deadening, corrosion, and stone damage protection. A commercial, sandless, undercoating or other materials providing equivalent protection, shall be applied to the underbody and under chassis sheet metal surfaces to a thickness of 1/16" to 1/8", except to the drive shafts, drain holes, lubrication points, engine/transmission oil pans, fuel tanks, heavy castings, suspension components, heat shields, heat diffusing devices, catalytic converters, and areas 12" or less from the exhaust system(s) as well as other areas specifically excluded by the chassis OEM. These areas shall be kept free of coating material. Chassis frame, underside of engine compartment hood, and underbody surfaces in excess of 1/8" thickness, or that is inaccessible without removing vehicle fuel tank(s) or other major components shall not require undercoating

3.15.4.26 CODE "K01" ALS CONFIGURATION.

When K01 is specified, the ALS configuration shall be furnished. It Includes:

a. Locked drug compartment.
b. High intensity cot light.
c. Two (2) Extra IV hangers
d. CPR Side Seat w/ occupant restraint device

3.15.4.27 CODE "K12" AUXILIARY AIR CONDITIONING CONDENSER.

When K12 is specified, an auxiliary condenser shall be provided which will allow for maximum system performance, based on the air conditioning and FSAM's recommendations. If the condenser is located above the cab, it shall not block the emergency lights. All added refrigeration lines and fittings shall be mechanical fittings compatible with OEM components furnished by the OEM.

Source: https://assist.dla.mil -- Downloaded: 2016-12-11T08:17Z
Check the source to verify that this is the current version before use.

3.15.4.28 CODE "SP" SKID PLATES.

When code SP is specified, OEM protective plates, or shields, shall be provided when available. The skid plate(s) shall provide protection for at least the transfer case. The skid plates shall be demountable for service of the components they protect. Sufficient openings shall be provided to enable draining of transmission and servicing the underside of the engine.

3.15.4.29 CODE "WR" INCREASED GVWR.

When code WR Is specified, the GVWR shall be increased by the OEM to the maximum level available.

3.15.4.30 CODE "K46" FURNISH "H" O2 CYLINDER IN LIEU OF "M" CYLINDER.

When code K46 is specified, an "H" O2 Cylinder shall be furnished in lieu of an "M" Cylinder.

3.15.4.31 CODE "DVE2" FURNISH EXTRA INTERIOR HEIGHT.

When code DVE2 is specified, the patient compartment interior height shall be increased to a minimum of 72".

3.15.4.32 CODE "K15C" REFLECTIVE CHEVRON.

When code K15C is specified, a minimum of 50% of the rear vertical surfaces of the exterior of the ambulance shall be covered with 4" alternating yellow and red chevron reflective striping sloping downward at an angle of 45° from the center of the vehicle

3.15.4.33 CODE "FFP" COOLANT HEATER – FUEL FIRED.

When code FFP is specified, a fuel fired coolant heater shall be furnished to assist in heating the patient compartment.

3.16 PAINTING, COLOR, AND MARKINGS.

3.16.1 PREPARATION FOR PAINTING.

Ambulance body and all attached equipment exterior surfaces, except polished metal parts, shall be thoroughly cleaned, treated, and coated with a firm primer and preservative with rust inhibiting properties, and painted in the finish color as specified. Ferrous metal interior surfaces shall be painted or, when not exposed for painting, shall be treated or coated to resist corrosion. Chassis and chassis frame components shall be preserved and finished in accordance to industry's standard practice.

3.16.2 COLOR, PAINT, AND FINISH.

The exterior color of the ambulance shall be gloss white in combination with a solid uninterrupted orange stripe and blue lettering and emblems. The stripe should be as close to parallel as possible with the road but a stripe transition angle is acceptable to connect the module beltline stripe with the chassis stripe. The exterior finish on painted metal modular bodies and metal roofs on Type II ambulances shall be an acrylic composition urethane or polyurethane paint. The FSAM's painted components shall have a paint film not less than 1.8 mils thick and a minimum total thickness of 2.6 mils including primers. The orange stripe shall not be less than 6" wide, nor more than 14" wide and shall encircle the entire ambulance body at the belt line below the bottom edge of cab windows but may exclude the front of the hood panel. The orange stripe shall be reflective tape. This single, solid band (except when interrupted by windows, locks, etc.), when viewed horizontally, shall appear as a stripe near parallel to the road. The interior finish shall be the FSAM's standard light color harmonizing with the color of upholstery. After application of the final film of paint, the surfaces shall be smooth and uniform.

Source: https://assist.dla.mil -- Downloaded: 2016-12-11T08:17Z
Check the source to verify that this is the current version before use.

3.16.2.1 COLOR STANDARDS AND TOLERANCES.

The exterior surface including the wheels shall be FSAM's standard gloss white.

3.16.3 SALT SPRAY RESISTANCE.

Treated exterior sheet metal of the ambulance body (except OEM Type II van) shall be capable of withstanding 250 hours of salt spray tested in accordance with ASTM B 117. The specimen used for the salt spray test shall be run through all steps of the cleaning and treating process, including priming. The primed specimen shall be scored from corner to corner using a sharp knife. After the test, the specimen panels shall exhibit no failure and not more than 1/8" rust or blister creepage from the scored lines.

3.16.4 REFLECTIVE EMBLEMS AND MARKINGS.

The material for the emblems and markings shall be applied using reflective material that has a coefficient of retroreflection measured in accordance with ASTM E 810 of 100 for White and 10 for Blue using 4° entrance angle and a 0.2° observation angle. The reflective color used shall be blue (color a) and white (color i) when applicable. The orange and blue markings shall be as specified Orange and Blue in American National Standard Z535.1, Safety Color Code. They shall comply with the tolerances expressed in terms of Munsell hue, value (lightness), and chroma (saturation). The emblems and markings shall be of the type, size, color, and location as follows:

A. Front markings
   1. The word "AMBULANCE," mirror imaged, shall be in block, blue, die cut style letters, not less than 4" high, centered above the grille, on the orange or white background. The placement of the word ambulance on the curved surface of the hood or on a flat plastic type bugscreen is permitted.
   2. A "Star of Life" in 3", blue, die cut style, with a white border; shall be located both to the right and left of the word "AMBULANCE."

B. Side and rear markings
   1. The word "AMBULANCE" shall be in block, blue, die cut style letters of not less than 6" in height, centered, with a white border, alongside or under the "Star of Life" on each side and rear of the vehicle body.
   2. A "Star of Life," not less than 16", in blue, die cut style, with a white border, on the right and left side panels. A "Star of Life" emblem, shall be provided on each rear door.

C. Top markings

A "Star of Life," of not less than 32" in blue, die cut style (may be without the white Staff of Aesculapius), shall be provided on the ambulance rooftop.

Source: https://assist.dla.mil -- Downloaded: 2016-12-11T08:17Z
Check the source to verify that this is the current version before use.

3.17 MARKINGS, AND CAUTION AND IDENTIFICATION PLATES.

FSAM's caution plates and identification plates shall be conspicuously installed for all equipment, etc., furnished requiring such notices. The FSAM's "Star of Life" certification shall be provided on a placard or label permanently affixed and easily visible.

Other than the manufacturer's trademark(s) names, no other identification than that specified shall be shown on exterior of the vehicle.

3.18 MANUALS, AND HANDBOOK OF INSTRUCTION.

The FSAM shall furnish with each ambulance one copy of a handbook of instruction in electronic media. This handbook shall contain all information and safety precautions to insure that the operator of the ambulance can properly operate and perform required operator level maintenance specific to the ambulance purchased. As a minimum, this handbook of instruction shall contain.

1. Table of contents
2. Copy of FSAM's invoice showing date of delivery and conditions of sale
3. FSAM's "Star of Life" certification of compliance statement
4. Copy of the FSAM's predelivery Inspection/test form signed by FSAM's inspector
5. Copy of FSAM's final (as built) work order.
6. Shipping papers.
7. List of the FSAM's service points
8. FSAM's components and equipment information (hardware, fixture, etc.) including part numbers specific to the ambulanced purchased
9. Complete wiring diagrams and schematics for wiring added to the OEM chassis by the FSAM
10. OEM's operator manual (may be in printed form if electronic form is not available from OEM)
11. Equipment manufacturer's operator manual(s) for any equipment furnished with, or as a part of the ambulance (may be in printed form if electronic form is not available from OEM)
12. All warranty information
13. Weight documents from a certified scale showing actual loading on the front axle, rear axle, and overall ambulance at curb weight
14. Payload Calculation Form
15. Certification of successful completion of the tests in AMD stds 5, 9, 10, 15, 21 & 25 by the FSAM for the ambulance listed in the FSAM's as built work order

If complete parts and service manuals are required for the ambulance, option PSM or PSME must be ordered.

Source: https://assist.dla.mil -- Downloaded: 2016-12-11T08:17Z
Check the source to verify that this is the current version before use.

3.19 PREDELIVERY INSPECTION AND SERVICING.

The FSAM prior to the acceptance and inspection of the ambulance(s) shall service and inspect each vehicle in accordance with the OEM's approved predelivery form, and the FSAM's predelivery (test, inspection, and road test) form. A signed copy of these forms (check sheets) shall be furnished with the vehicle. Servicing shall comply with ambient temperatures and conditions applicable with the route of transport to the consignee's ultimate destination. Servicing shall include all tank(s) full of fuel; checking to determine satisfactory and complete operation of all mechanical and electrical features, equipment and system; elimination of rattles, noises, and squeaks; cleaning the interior and exterior. Thus the vehicle shall be delivered ready to use.

3.20 WORKMANSHIP.

1. Vehicles shall be free from defects that may impair their serviceability or detract from appearance.
2. All bodies, systems, equipment, and interfaces with the chassis shall be done in accordance with the OEM Body Builders Book.
3. Defective components shall not be furnished. Parts, equipment, and assemblies that have been repaired or modified to overcome deficiencies shall not be furnished without the approval of the purchaser. Component parts and units shall be manufactured to definite standard dimensions with proper fits, clearances, and uniformity. General appearance of the vehicle shall not show any evidence of poor workmanship.
4. The following shall be reason for rejection:
   a) Rough, sharp, or unfinished edges, burrs, seams, corners, and joints.
   b) Grit, seeds, orange peel, fish eyes, streaks, running, sagging, wrinkles, pin holes, craters in paint, failure to meet minimum thickness requirements and non uniformity of specified color.
   c) Body panels or components that are uneven, unsealed, or contain cracks and dents.
   d) Misalignment of body fasteners, glass, viewing panels, light housings, other items with large or uneven gaps, spacing, etc., such as door, body panels, and hinged panels.
   e) Improperly fabricated and routed wiring or harness.
   f) Improperly supported or secured hoses, wires, wiring harnesses, mechanical controls, etc.
   g) Interference of chassis components, body parts, doors, etc.
   h) Leaks of any gas, vacuum, or fluid lines (air conditioning, coolant, oil, etc.).
   i) Noise, panel vibrations, etc.
   j) Inappropriate or incorrect use of hardware, fasteners, components, or methods of construction.
   k) Incomplete or improper welding, riveting, or bolting.
   l) Lack of uniformity and symmetry where applicable.

Source: https://assist.dla.mil -- Downloaded: 2016-12-11T08:17Z
Check the source to verify that this is the current version before use.

4. Quality Assurance Provisions

4.1 RESPONSIBILITY FOR INSPECTION AND TESTS.

The FSAM is responsible for the performance of all inspections and test requirements specified. The FSAM may use their own or any other facilities suitable for the predelivery and acceptance inspections unless disapproved by the purchaser. The purchaser reserves the right to perform any of the inspections and tests set forth in the specification where such inspections are deemed necessary to assure supplies and service conform to the specification and contract. The FSAM shall provide the purchaser's inspection representatives with the FSAM's readily available instruments and all such assistance as they may find necessary.

4.1.1 PURCHASER VERIFICATION.

Quality assurance operations performed by the FSAM will be subject to purchaser verification at unscheduled intervals. Verification will consist of observation of the operations to determine that practices, methods, and procedures of the FSAM's inspection are being properly applied. Failure of the FSAM to promptly correct observed deficiencies shall be cause for suspension of acceptance of the ambulance(s) until conformance to specification criteria has been demonstrated.

4.2 INSPECTION FOR ACCEPTANCE.

4.2.1 QUALITY CONFORMANCE INSPECTION.

Quality conformance inspection applies to all ambulance(s) offered for acceptance under the contract. Quality conformance inspection shall consist of:

1. Workmanship inspection
2. Operational checks
3. Examination of the ambulance handbook
4. Verification of successful completion of AMD tests 001-025

4.2.2 OPERATION CHECKS.

Operational checks of the ambulance shall cover all controls, electrical systems, and devices, doors, windows, cabinets, accessories, in and outside the ambulance. Ambulance shall be driven at highway speeds, turns made at minimum radii, brakes tested for dependability, checked for rattles and squeaks. All controls and mechanisms shall function and operate as intended at the time of delivery.

4.2.3 INSPECTION FAILURE OF AMBULANCE (S).

Failure of a production ambulance to have the certifications required or successfully complete the examinations and tests shall be cause for non-acceptance of any of the contract quantity, until deficiencies are corrected and evidence of the corrective action preclude recurrence of similar deficiencies. Failure of the ambulance to successfully complete inspection shall not constitute an excusable delay in meeting scheduled deliveries.

Source: https://assist.dla.mil -- Downloaded: 2016-12-11T08:17Z
Check the source to verify that this is the current version before use.

4.3 "STAR OF LIFE" CERTIFICATION REQUIREMENTS.

4.3.1 QUALIFYING PROVISIONS.

The FSAM is obligated to certify to the Government/ purchasers that the ambulance bearing the "Star of Life," its components, and equipment meet or exceed all the requirements and tests set forth in this specification. The certification and "Star of Life" label, verify that the ambulance conforms to the version of this specification in effect on the date the ambulance was contracted for. Compliance for a "Star of Life" label is defined as certification backed by confirmed verifications of inspections and tests. The verifications shall be in possession of the issuer and presented if and when challenged. For the benefit of purchaser's procuring activity evaluation and review, prior to or with each proposed bid (solicitation), the FSAM shall provide and forward representative material of their "Star of Life" ambulance(s). This material shall include: a letter certified by a company officer, stating that the delivered ambulance(s) shall comply with paragraphs 4.3.2 thru 4.3.5. Failure to provide certification, at the time the vehicle is presented for inspection, will deem the vehicle unacceptable and shall constitute grounds for termination in accordance with the terms of the contract. Also included shall be: general specification data, exterior and interior pictures, dimensional drawings/data, etc., and other information as requested.

4.3.2 DOCUMENTATION OF "STAR OF LIFE" CERTIFICATION.

The FSAM shall compile complete certified documentation of verifications for all the tests required under 4.4 conforming to 4.3.3 and 4.3.5 for each Type of ambulance intended to be marketed to the Emergency Medical Care industry as a "Star of Life" ambulance.

4.3.3 CRITERIA OF CERTIFICATIONS.

The initial testing and inspections required for certification shall be performed by a nationally recognized independent testing facility. The individual certifications will remain valid for five years as long as the type of ambulance tested remains in production. Design changes during the five year certification period must be tested at the time of production release.

Certifications that appear on the ambulance need not be re-submitted (i.e.; DOT, EPA, etc.). Certification(s) will be acceptable in lieu of actual verification test during inspections providing supporting verifying data complying with 4.3.3 is on file for examination.

Certification from OEM and individual equipment manufacturers are acceptable providing they are not part of a system(s) or altered and in accordance with 4.3.4.

Type certifications of individual components and equipment products are acceptable.

Each ambulance constructed shall be tested by the FSAM to demonstrate compliance with AMD Standards 5, 9, 10, 15, 21 & 25. This is in addition to the initial type testing certification required.

Source: https://assist.dla.mil -- Downloaded: 2016-12-11T08:17Z
Check the source to verify that this is the current version before use.

4.3.4 CERTIFICATION LETTER FORMAT.

Certification letters submitted for the ambulance model, components, and equipment being certified shall contain the following information on FSAM's letterhead stationery in electronic format (pdf files):

1. To whom certifying.
2. Date.
3. Units or items.
4. FSAM and address.
5. Date product tested.
6. Model number and specification data.
7. Applicable specification references and test requirement.
8. Summary of the test report.
9. A certifying statement w/ official signature.

4.3.5 CERTIFICATION VERIFICATION DATA REPORTS.

The testing facility for each certification shall supply supportive verification data and information on letterhead stationery in electronic format (pdf files):

1. For whom tested.
2. Report date.
3. Name of sample product or device.
4. FSAM's address.
5. Serial and model number(s).
6. Specification referral and amendment number(s), and test requirement(s).
7. Test facilities used and location.
8. Test equipment used.
9. Test procedure.
10. Test results.
11. Verifying test data.
12. Photographs.
13. Test conclusion(s).
14. Witness(es), and authorized signature.

4.4 TESTS.

4.4.1 TEST CRITERIA.

The ambulance shall be prepared for operation in accordance with OEM's recommendations, and AMD Standards 001-025. The ambulance shall successfully complete all parts of the quality conformance inspection.

Source: https://assist.dla.mil -- Downloaded: 2016-12-11T08:17Z
Check the source to verify that this is the current version before use.

5. DELIVERY

5.1 PREPARATION FOR DELIVERY.

The ambulance(s) shall be preserved and packaged for mobile delivery in accordance with the FSAM's standard commercial practice, insuring carrier acceptance and safe delivery to destination in compliance with regulations applicable to the mode of transportation.

5.2 GOVERNMENT/PURCHASER RESPONSIBILITY.

The FSAM shall deliver the vehicle to the consignee delivery address designated on the motor vehicle delivery/purchase order.

The Government/Purchaser is responsible for:

1. Notifying the FSAM of the delayed delivery date and the in-transit mileage accumulation as applicable.
2. In the presence of the delivering driver, immediately inspecting the vehicle for damage, abuse, loss or theft that may have occurred during transit. Any such findings should be accurately described on the delivery receipt the driver presents for signature. If the vehicle(s) are covered with snow, Ice or dirt so as to prevent a complete inspection at the time of delivery, this is to be noted on the delivery receipt. The driver is required to acknowledge any notification on the delivery receipt by signature.
3. Notifying the FSAM of any damages or shortages found within 24 hours.
4. Obtaining local safety and emission testing that may be required.
5. Obtaining the title and license plates that may be required.
6. Retuning the warranty registration card(s) to the FSAM. The FSAM's warranty does not go in effect until the ambulance is registered with the FSAM by the Government/Purchaser.

Source: https://assist.dla.mil -- Downloaded: 2016-12-11T08:17Z
Check the source to verify that this is the current version before use.

6. NOTES

6.1 INTENDED USE OF SPECIFICATION.

The intended use of this specification is to define and procure certified "Star of Life" ambulances for use by the federal government. The use of this specification by State and local Governments is permitted.

Since the use of this specification is voluntary for State Governments, each State Department of Health will generally determine if their state wishes to use this specification.

6.1.1 FEDERAL SPECIFICATION COVERAGE.

This federal specification covers only the ambulances approved to display the "Star of Life" symbols for use by the federal, state and local governments of the United States.

6.1.2 PRECAUTIONS AND OBSERVATIONS.

Purchasers should read the entire document before requisitioning an ambulance, in order to be knowledgeable of just what equipment is standard, and which options need to be exercised. Due to the variety of ambulance equipment or features, some options may be incompatible with the model desired (reference OEM and FSAM's data books).

6.1.3 DEFINITION OF GOVERNMENT-PURCHASER.

Government or purchaser as used in the context of this document means the federal, state, or local government.

6.2 WARRANTY.

6.2.1 WARRANTY COVERAGE.

The FSAM shall warrant the ambulance and furnished equipment against parts failure or malfunction due to design, construction, or installation errors, defective workmanship, and missing or incorrect parts for a minimum period of 12 months or 12,000 miles (which ever occurs first) for domestic use, and 15 months or 12,000 miles (which ever occurs first) for foreign use from date of acceptance*, exclusive of any authorized accumulated driveway mileage.

However, if the FSAM received from any supplier or subcontractor additional warranty on the whole or any component of the ambulance, in the form of time and/or mileage, including any prorate arrangements, or the FSAM generally extends to their commercial customers a greater or extended warranty coverage, the Government/purchaser shall receive corresponding warranty benefits.

*The warranty begins when the Government/purchaser accepts the ambulance from the FSAM FOB point of destination.

Source: https://assist.dla.mil -- Downloaded: 2016-12-11T08:17Z
Check the source to verify that this is the current version before use.

6.2.1.1 DOMESTIC USE.

When vehicles are used within the 50 States of the United States, the District of Columbia, the Commonwealth of Puerto Rico, American Samoa, Guam, the Commonwealth of the Northern Mariana Islands, the Trust Territory of the Pacific islands, and the Virgin Islands, the warranty shall include furnishing, without cost to the Government (FOB FSAM's nearest dealer or branch to vehicle's location or station), new parts and assemblies to replace any that failed or malfunctioned within the warranty period. In addition, when the Government elects to have the work performed at the FSAM's plant, branch, or dealer, or with the FSAM's approval (i) to correct the vehicle itself or (ii) to have the vehicle corrected by a commercial garage facility, the cost of the labor involved in the replacement of the failed or malfunctioned parts or assemblies shall be borne by the FSAM.

6.2.1.2 FOREIGN USE.

When vehicles are used outside the 50 States of the United States, the District of Columbia, the Commonwealth of Puerto Rico, American Samoa, Guam, the Commonwealth of the Northern Mariana Islands, the Trust Territory of the Pacific islands and the Virgin Islands, the warranty shall include the furnishing of new parts or assemblies to replace any returned to the FSAM by the Government which failed or malfunctioned within the warranty period. The replacement parts or assemblies shall be delivered by the FSAM to the port of embarkation in the United States designated by the Government. The FSAM shall not be required to bear the cost of the labor involved in correcting defects in vehicles operated in foreign countries.

6.2.2 WARRANTY EXCLUSIONS: OEM PROVISIONS APPLY.

The following items are considered normal maintenance and repair for which the FSAM need not assume liability for reimbursing the Government/purchaser regardless of the ambulance age or mileage:

1. Abuse, negligence, or un-approved alteration of original parts.
2. Damage from accidents.
3. Standard brake and clutch adjustments.
4. General tightening, headlamp adjustments.
5. Wheel alignment or tire balancing.
6. Tires, batteries, medical supplies and equipment, and radio(s) (if warranted by their manufacturers.
7. Miscellaneous expense such as fuel, towing, telephone, travel, lodging, or loss of personal property.

6.3 REPAIR PARTS AND SERVICE.

As continuous operation of the ambulance described by this specification is of utmost importance for the successful FSAM to be in a position to render prompt service and to furnish replacement parts. Accordingly, FSAMs shall indicate the extent of their ability to render prompt service by furnishing a list of branch offices or agencies where complete stocks of repair parts are maintained and can be secured within a reasonable time after ordering by part number from the FSAM's part book and at such discount as may be quoted from year to year by the FSAM purchased under this specification.

Source: https://assist.dla.mil -- Downloaded: 2016-12-11T08:17Z
Check the source to verify that this is the current version before use.

6.4 STATEMENT OF ORIGIN OR BILL OF SALE.

A FSAM's Statement of Origin or Bill of Sale showing the applicable purchase order number is required for each ambulance procured under this specification. Such documents shall be forwarded to the consignee's mailing address.

6.5 CHANGES AND AMENDMENTS.

When a using agency or purchaser considers that this specification requires revision, a written request for change or additions to the document supported by adequate justification should be filed on the General Services Administration, Automotive Center, Engineering Branch (QMDAA)'s electronic comment collector. The agency will be informed of action taken. New and revised information regarding this specification may be issued from time to time under an amendment to the federal specification. These amendments are identified by the same number and title as the document. Amendments should be retained until such time as the entire document is revised.

Custodian & Preparing Activity:
GSA-FAS-QMDAA

Source: https://assist.dla.mil -- Downloaded: 2016-12-11T08:17Z
Check the source to verify that this is the current version before use.

FIGURE 1

Certification & Payload Signage

The label shall be mounted on the body (module) interior in a conspicuous location.

- The label shown here is suggested format.
- Deviations in dimensions are acceptable.
- All text must be included.

CERTIFIED "STAR OF LIFE" AMBULANCE

Date of Manufacture _____

Mfg By _____

Address _____

City_____State_____Zip _____

This ambulance conforms to Federal Specification KKK-A-1822 in effect on the date the ambulance was contracted for.

Final Stage Ambulance Manufacturers ID Number _____

VIN _____

OEM Chassis Model, Year of Manufacture _____

Vehicle Type _____

NOTICE: THIS VEHICLE, AS MANUFACTURED, CONFORMS TO THE PAYLOAD REQUIREMENTS OF THE FEDERAL AMBULANCE SPECIFICATION KKK-A-1822. USERS SHALL NOT LOAD VEHICLES ABOVE THE GVWR, GAWRs OR EXCEED THE TOTAL USABLE PAYLOAD LISTED BELOW.

TOTAL USABLE PAYLOAD _____lbs.
(TOTAL REMAINING WEIGHT CAPACITY OF OCCUPANTS AND CARGO USER MAY ADD)

Source: https://assist.dla.mil -- Downloaded: 2016-12-11T08:17Z
Check the source to verify that this is the current version before use.

FIGURE 2

Payload Calculation Form

The completed form shall be included in the handbook of instructions.
- The form shown here is suggested format.
- Deviations in dimensions are acceptable.
- All text must be included.

CUSTOMER USABLE PAYLOAD INFORMATION

Final Stage Ambulance Manufacturer's Name:_____

OEM Chassis Year, Make, Model: _____

1) Ambulance Model, Type, Prod. #: _____

2) OEM GAWR – Front: _____ lbs

3) OEM GAWR – Rear: _____ lbs

4) OEM GVWR: _____ lbs

5) Minimum Payload Per KKK-A-1822: _____ lbs

6) Curb Weight – **AS BUILT** – Front Axle: _____ lbs

7) Curb Weight – **AS BUILT** – Rear Axle: _____ lbs

8) Total Curb Weight – **AS BUILT**: _____ lbs

9) **CUSTOMER USABLE** Total Payload **AS BUILT** (item 4 minus item 8): _____ lbs

10) **CUSTOMER USABLE** Front Axle Payload **AS BUILT** (item 2 minus item 6): _____ lbs

11) Total Weight of Permanently mounted Options Specified (only required if item 9 does not meet or exceed item 5): _____ lbs

12) Payload of Basic KKK Vehicle (item 9 plus item 11) (only required if item 9 does not meet or exceed item 5): _____ lbs

Source: https://assist.dla.mil -- Downloaded: 2016-12-11T08:17Z
Check the source to verify that this is the current version before use.

FIGURE 3

12-Volt DC Electrical System

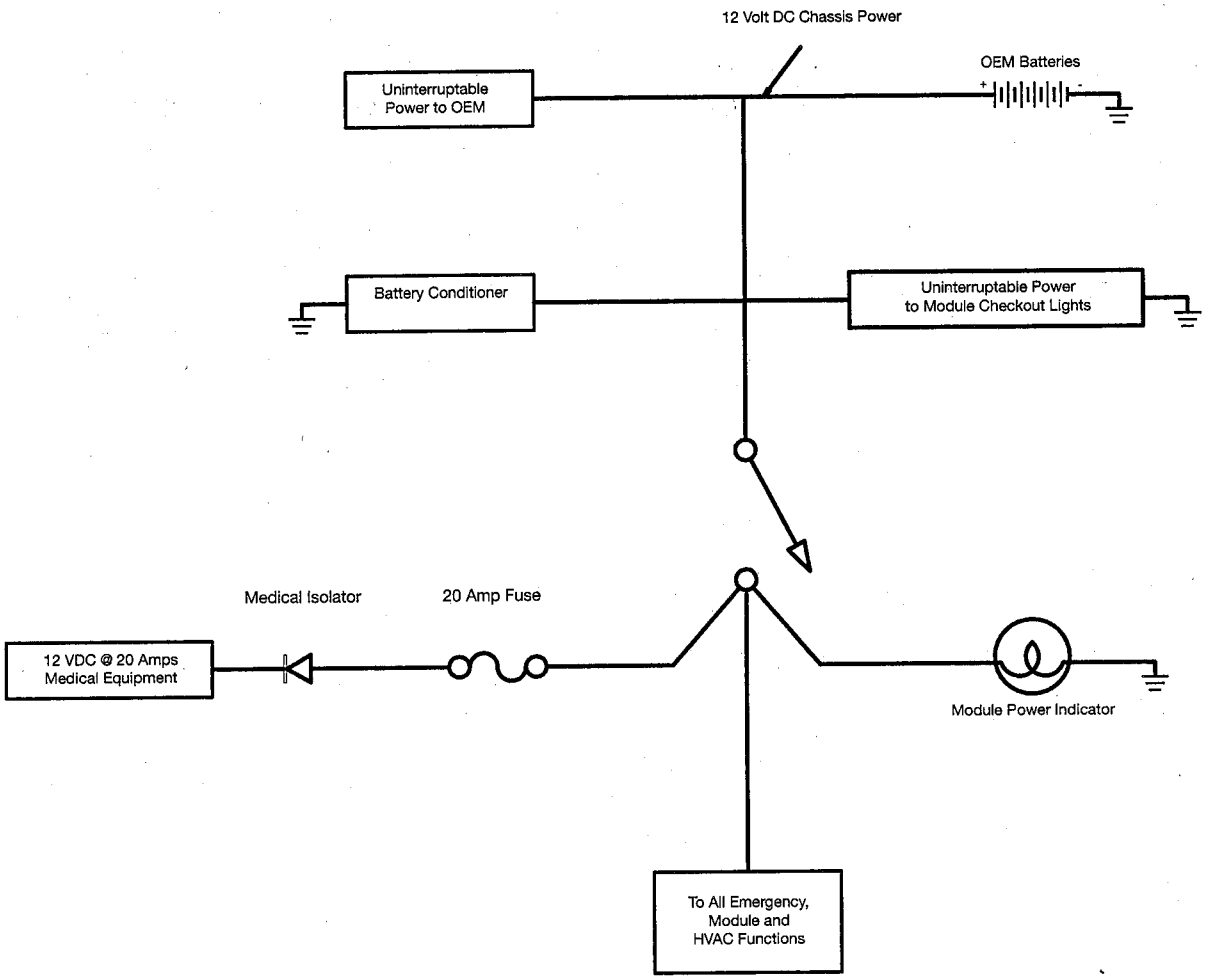

Source: https://assist.dla.mil -- Downloaded: 2016-12-11T08:17Z
Check the source to verify that this is the current version before use.

FIGURE 4

125-Volt AC Electrical System

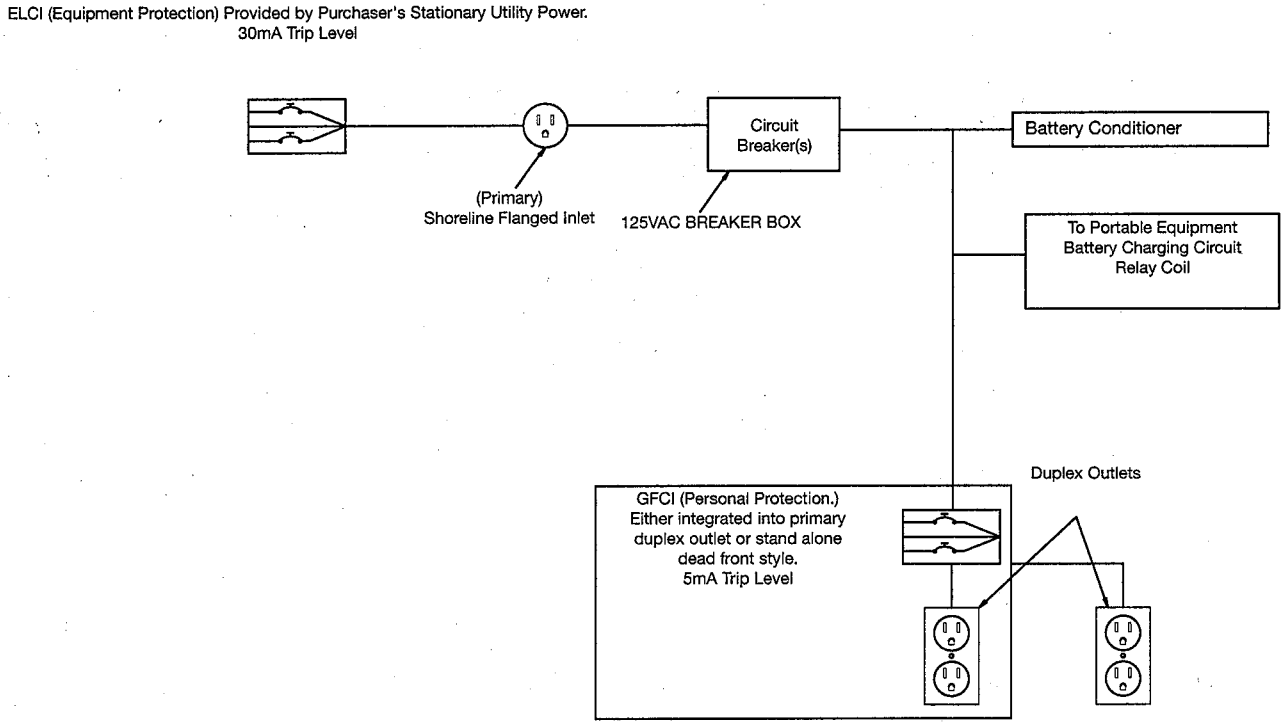

Source: https://assist.dla.mil -- Downloaded: 2016-12-11T08:17Z
Check the source to verify that this is the current version before use.

FIGURE 5

Portable Equipment Battery Charging Circuit

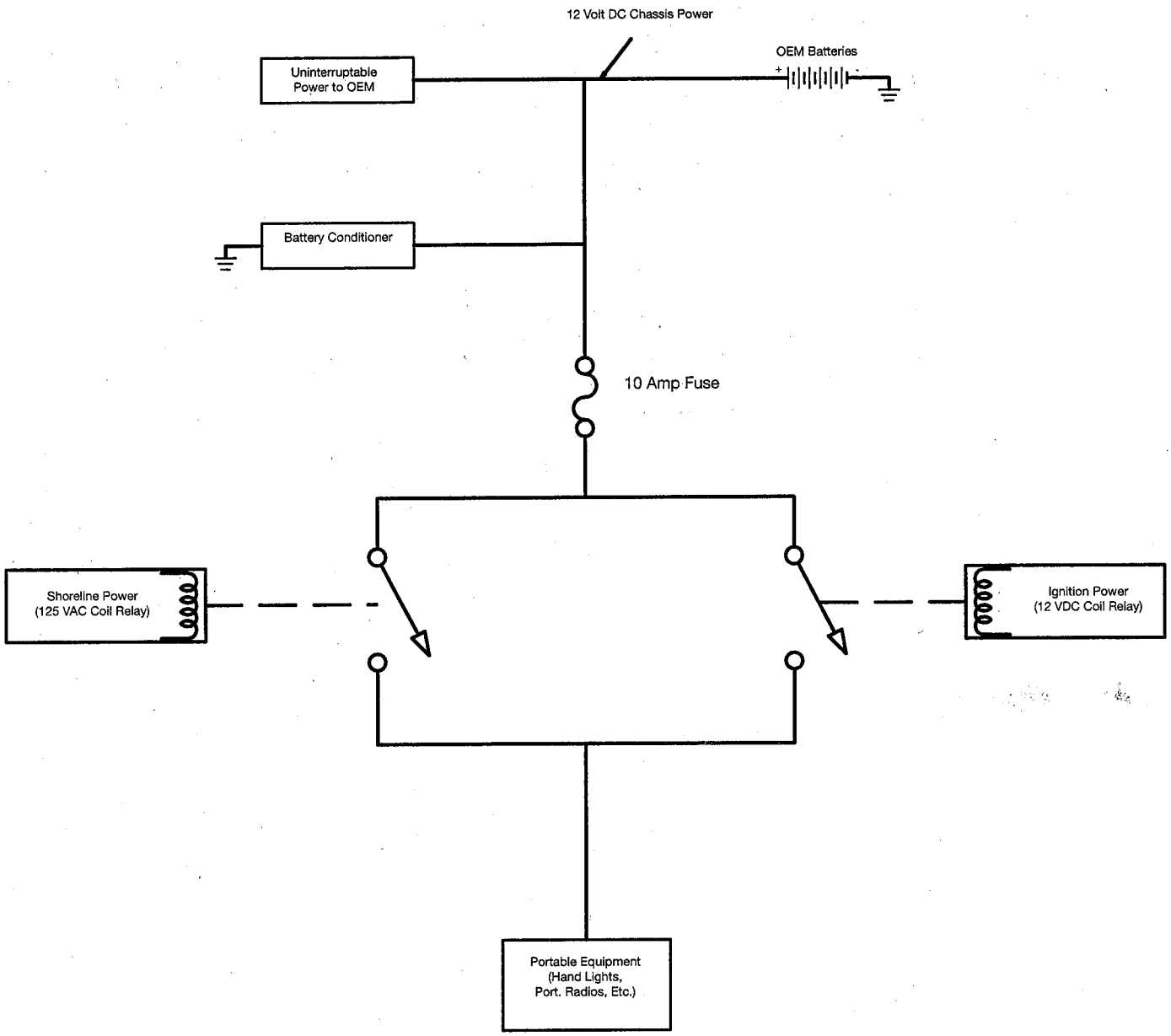

Source: https://assist.dla.mil -- Downloaded: 2016-12-11T08:17Z
Check the source to verify that this is the current version before use.