MIL-S-19500/268C
25 June 1971
SUPERSEDING
MIL-S-19500/268B(NAVY)
1 July 1965

MILITARY SPECIFICATION

SEMICONDUCTOR DEVICE, TRANSISTOR, NPN, SILICON SWITCHING TYPES 2N2481 AND TX2N2481

This specification is mandatory for use by all Departments and Agencies of the Department of Defense.

1. SCOPE

1.1 Scope. This specification covers the detail requirements for a NPN, silicon, high-speed switching transistor. The prefix "TX" is used on devices submitted to and passing the special process-conditioning, testing, and screening specified in 4.5 through 4.5.9.1.

1.2 Physical dimensions. See figure 1 (TO-18).

1.3 Maximum ratings.

P_T 1/ $T_A = 25°C$	P_T 2/ $T_C = 25°C$	V_{CBO}	V_{EBO}	V_{CEO}	V_{CES}	T_{stg} and T_{op}	T_J
W	W	Vdc	Vdc	Vdc	Vdc	°C	°C
0.36	1.2	40	5.0	15	30	-65 to +200	+200

1/ Derate 2.06 mW/°C for $T_A > 25$ C.
2/ Derate 6.85 mW/°C for $T_C > 25$ C.

1.4 Primary electrical characteristics.

	h_{FE} $V_{CE} = 1$ Vdc $I_C = 10$ mAdc	$\|h_{fe}\|$ $V_{CE} = 10$ Vdc $I_C = 10$ mAdc f = 100 mHz	$V_{CE(sat)}$ $I_C = 10$ mAdc $I_B = 1$ mAdc	t_{on} $I_C = 10$ mAdc $I_{B1} = 1$ mAdc $V_{BE(O)} = 2$ Vdc	t_{off} $I_C = 10$ mAdc $I_{B1} = 1$ mAdc $I_{B2} = 0.5$ mAdc
			Vdc	ns	ns
Min	40	3.0	---	---	---
Max	120	12	0.25	75	45

2. APPLICABLE DOCUMENTS

2.1 The following documents, of the issue in effect on date of invitation for bids or request for proposal, form a part of the specification to the extent specified herein.

FSC 5961

Source: https://assist.dla.mil -- Downloaded: 2016-12-03T23:47Z
Check the source to verify that this is the current version before use.

SPECIFICATION

MILITARY

MIL-S-19500 - Semiconductor Devices, General Specification for.

STANDARDS

MILITARY

MIL-STD-202 - Test Methods for Electronic and Electrical Component Parts.
MIL-STD-750 - Test Methods for Semiconductor Devices.

(Copies of specifications, standards, drawings, and publications required by suppliers in connection with specific procurement functions should be obtained from the procuring activity or as directed by the contracting officer.)

3. REQUIREMENTS

3.1 General. Requirements shall be in accordance with MIL-S-19500, and as specified herein.

3.2 Abbreviations, symbols, and definitions. The abbreviations, symbols, and definitions used herein are defined in MIL-S-19500.

3.3 Design, construction, and physical dimensions. Transistors shall be of the design, construction, and physical dimensions shown on figure 1.

* 3.3.1 Lead material and finish. Lead material shall be Kovar or alloy 52. Lead finish shall be gold-plated. (Leads may be tin-coated if specified in the contract or order, and this requirement shall not be construed as adversely affecting the qualified-product status of the device, or applicable JAN marking, see 6.2.)

* 3.3.1.1 Selectivity of lead material. Where choice of lead material (see 3.3.1 above) is desired, it shall be specified in the contract or order (see 6.2).

3.4 Performance characteristics. Performance characteristics shall be as specified in tables I, II, and III, and as follows:

3.4.1 Process-conditioning, testing, and screening for "TX" type. Process-conditioning, testing, and screening for the "TX" type shall be as specified in 4.5.

3.5 Marking. The following markings specified in MIL-S-19500 may be omitted from the body of the transistor at the option of the manufacturer:

(a) Country of origin.
(b) Manufacturer's identification.

3.5.1 "TX" marking. Devices in accordance with the "TX" requirements shall be marked with "TX" immediately following the JAN or J prefix.

4. QUALITY ASSURANCE PROVISIONS

4.1 Sampling and inspection. Sampling and inspection shall be in accordance with MIL-S-19500, and as specified herein.

4.2 Qualification inspection. Qualification inspection shall consist of the examinations and tests specified in tables I, II, and III.

Source: https://assist.dla.mil -- Downloaded: 2016-12-03T23:47Z
Check the source to verify that this is the current version before use.

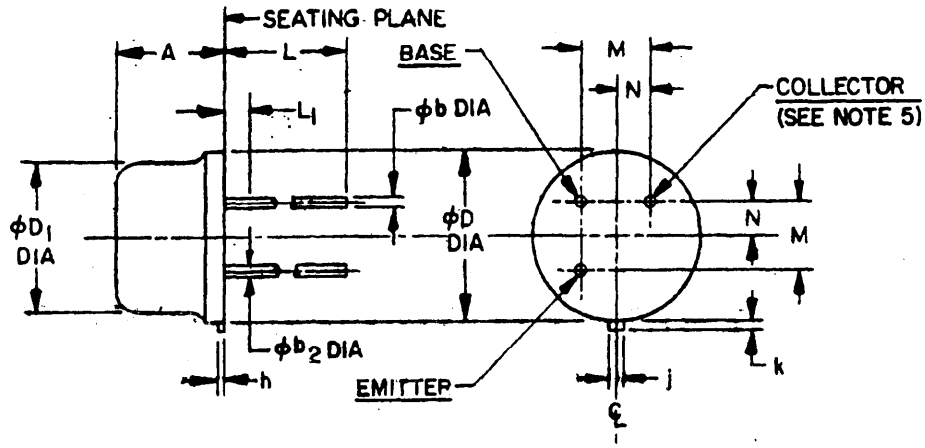

LTR	DIMENSIONS INCHES MIN	INCHES MAX	MILLIMETERS MIN	MILLIMETERS MAX	NOTES
ØD	.209	.230	5.31	5.84	
ØD1	.178	.195	4.52	4.95	
A	.170	.210	4.32	5.33	
L	.500	.750	12.70	19.05	7
L1		.050		1.27	8
Øb	.016	.021	.41	.53	2, 7
Øb2	.016	.019	.41	.48	3, 7
k	.028	.048	.71	1.22	6
j	.036	.046	.91	1.17	
h		.020		.51	
M	.0707 Nom		1.80 Nom		4
N	.0354 Nom		.90 Nom		4

NOTES:
1. Metric equivalents (to the nearest .01 mm) are given for general information only and are based upon 1 inch = 25.4 mm.
2. Measured in the zone beyond .250(6.35 mm) from the seating plane.
3. Measured in the zone .050(1.27 mm) and .250(6.35 mm) from the seating plane.
4. When measured in a gaging plane .054+.001, -.000 (1.37+.03, -.00 mm) below the seating plane of the transistor, maximum diameter leads shall be within .007(.18 mm) of their true location relative to a maximum width tab. Smaller diameter leads shall fall within the outline of the maximum diameter lead tolerance. Figure 2 shows the preferred measurement method.
5. The collector shall be electrically connected to the case.
6. Measured from the maximum diameter of the actual device.
7. All three leads. (See 3.3.1).
8. Diameter of leads in this zone is not controlled.

FIGURE 1. Physical dimensions of transistor types 2N2481 and TX2N2481 (TO-18).

Source: https://assist.dla.mil -- Downloaded: 2016-12-03T23:47Z
Check the source to verify that this is the current version before use.

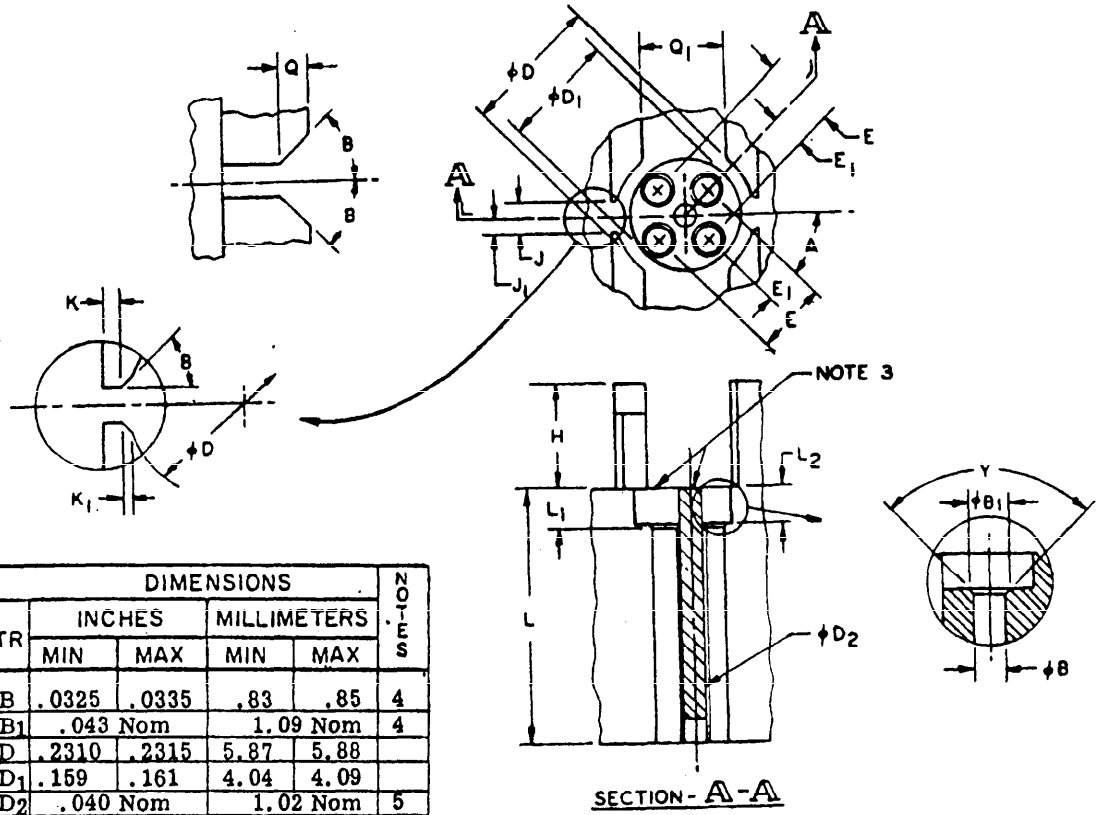

LTR	DIMENSIONS INCHES MIN	INCHES MAX	MILLIMETERS MIN	MILLIMETERS MAX	NOTES
ØB	.0325	.0335	.83	.85	4
ØB1	.043 Nom		1.09 Nom		4
ØD	.2310	.2315	5.87	5.88	
ØD1	.159	.161	4.04	4.09	
ØD2	.040 Nom		1.02 Nom		5
E	.0995	.1005	2.53	2.55	
E1	.0495	.0505	1.26	1.28	
H	.145	.155	3.68	3.94	
J	.0470	.0475	1.19	1.21	
J1	.0235	.0245	.60	.62	
K	.009	.011	.23	.28	
K1	.005 Nom		.127 Nom		
L	.372	.378	9.45	9.60	
L1	.054	.055	1.37	1.40	
L2	.043 Nom		1.09 Nom		
Q	.040 Nom		1.02 Nom		
Q1	.123	.127	3.12	3.23	
A	44.90°	45.10°	---	---	
B	45° Nom		---	---	
Y	90° Nom		---	---	

NOTES:

1. Metric equivalent (to the nearest .01 mm) are given for general information only and are based upon 1 inch = 25.4 mm.
2. The following gaging procedure shall be used: The device being measured shall be inserted until its seating plane is .125 (3.18 mm) +.010 (.254 mm) from the seating surface of the gage. A force of 8 ±.5 oz. shall then be applied parallel and symmetrical to the device's cylindrical axis. When examined visually after the force application (the force need not be removed) the seating plane of the device shall be seated against the gage.
   The use of a pin straightener prior to insertion in the gage is permissible.
   A spacer may be used to obtain the .125 (3.18 mm) distance from the gage seat prior to force application.
3. These surfaces to be parallel and in same plane within ±.001 (.025 mm).
4. Four holes.
5. Pressed in.

FIGURE 2. Gage for lead and tab location for transistor type 2N2481 and TX2N2481.

Source: https://assist.dla.mil -- Downloaded: 2016-12-03T23:47Z
Check the source to verify that this is the current version before use.

4.2.1 Qualification testing. The non-TX type shall be used for qualification testing. Upon request to the qualifying activity, qualification will be extended to include the "TX" type of the device.

4.3 Quality conformance inspection. Quality conformance inspection shall consist of group A, B, and C inspections. When specified in the contract or order, one copy of the quality conformance inspection data, pertinent to the device inspection lot shall be supplied with each shipment by the device manufacturer (see 6.2).

4.3.1 Group A inspection. Group A inspection shall consist of the examinations and tests specified in table I.

4.3.2 Group B inspection. Group B inspection shall consist of the examinations and tests specified in table II.

4.3.3 Group C inspection. Group C inspection shall consist of the examinations and tests specified in table III. This inspection shall be conducted on the initial lot and thereafter every 6 months during production.

* 4.3.4 Group B and C life-test samples. Samples that have been subjected to group B, 340-hours life-test, may be continued on test to 1,000 hours in order to satisfy group C life-test requirements. These samples shall be predesignated, and shall remain subjected to the group C 1,000-hour acceptance evaluation after they have passed the group B, 340-hour acceptance criteria. The cumulative total of failures found during 340-hour test and during the subsequent interval up to 1,000 hours shall be computed for 1,000-hour acceptance criteria, see 4.3.3.

TABLE I. Group A inspection.

Examination or test	MIL-STD-750		LTPD		Symbol	Limits		Unit
	Method	Details	Non TX	TX		Min	Max	
Subgroup 1			10	10				
Visual and mechanical examination	2071				---	---	---	---
Subgroup 2			5	2				
Breakdown voltage, collector to emitter	3011	Bias cond. D; I_C = 30 mAdc; pulsed (see 4.4.1)			BV_{CEO}	15	---	Vdc
Breakdown voltage, collector to emitter	3011	Bias cond. C; I_C = 1.0 μAdc			BV_{CES}	30	---	Vdc
Breakdown voltage, collector to base	3001	Bias cond. D; I_C = 10 μAdc			BV_{CBO}	40	---	Vdc
Breakdown voltage, emitter to base	3026	Bias cond. D; I_E = 100 μAdc			BV_{EBO}	5.0	---	Vdc
Collector to base cutoff current	3036	Bias cond. D; V_{CB} = 20 Vdc			I_{CBO}	---	50	nAdc
Emitter to base cutoff current	3061	Bias cond. D; V_{EB} = 4 Vdc			I_{EBO}	---	100	nAdc

Source: https://assist.dla.mil -- Downloaded: 2016-12-03T23:47Z
Check the source to verify that this is the current version before use.

TABLE I. Group A inspection - Continued

Examination or test	MIL-STD-750		LTPD		Symbol	Limits		Unit
	Method	Details	Non TX	TX		Min	Max	
Subgroup 3			5	3				
Forward-current transfer ratio	3076	V_{CE} = 1.0 Vdc; I_C = 1.0 mAdc; pulsed (see 4.4.1)			h_{FE}	25	---	---
Forward-current transfer ratio	3076	V_{CE} = 1.0 Vdc; I_C = 10 mAdc; pulsed (see 4.4.1)			h_{FE}	40	120	---
Forward-current transfer ratio	3076	V_{CE} = 1.0 Vdc; I_C = 150 mAdc; pulsed (see 4.4.1)			h_{FE}	20	---	---
Subgroup 4			5	3				
Collector to emitter voltage (saturated)	3071	I_C = 10 mAdc; I_B = 1.0 mAdc; pulsed (see 4.4.1)			V_{CE}(sat)	---	0.25	Vdc
Collector to emitter voltage (saturated)	3071	I_C = 100 mAdc; I_B = 10 mAdc; pulsed (see 4.4.1)			V_{CE}(sat)	---	0.4	Vdc
Base emitter voltage (saturated)	3066	Test cond. A; I_C = 10 mAdc; I_B = 1.0 mAdc; pulsed (see 4.4.1)			V_{BE}(sat)	0.7	0.82	Vdc
Base emitter voltage (saturated)	3066	Test cond. A; I_C = 100 mAdc; I_B = 10 mAdc; pulsed (see 4.4.1)			V_{BE}(sat)	---	1.25	Vdc
* Subgroup 5			7	5				
Magnitude of common-emitter small-signal short-circuit forward-current transfer ratio	3306	V_{CE} = 10 Vdc; I_C = 10 mAdc; f = 100 MHz			$\|h_{fe}\|$	3	12	---
Open circuit output capacitance	3236	V_{CB} = 5.0 Vdc; I_E = 0; 100 kHz $\leq$ f $\leq$ 1 MHz			C_{obo}	---	5.0	pF
Input capacitance (output open circuited)	3240	V_{EB} = 0.5 Vdc; I_C = 0; 100 kHz $\leq$ f $\leq$ 1 MHz			C_{ibo}	---	7.0	pF
Real part of small-signal short-circuit input impedance	3266	V_{CE} = 10 Vdc; I_C = 10 mAdc; f = 250 MHz			RE_{hie}	---	60	ohms
Subgroup 6			7	5				
Switching parameters:								
Turn-on time	3251	Test cond. A; V_{CC} = 10 Vdc; I_C = 100 mAdc; I_{B1} = 10 mAdc; $V_{BE(O)}$ = 2.0 Vdc			t_{on}	---	40	ns

Source: https://assist.dla.mil -- Downloaded: 2016-12-03T23:47Z
Check the source to verify that this is the current version before use.

TABLE I. Group A inspection - Continued

Examination or test	MIL-STD-750		LTPD		Symbol	Limits		Unit
	Method	Details	Non TX	TX		Min	Max	
Subgroup 6 - Continued								
Switching parameters (Cont):								
Turn-on time	3251	Test cond. A; V_{CC} = 3.0 Vdc; I_C = 10 mAdc; I_{B1} = 1.0 mAdc; $V_{BE(O)}$ = 2.0 Vdc			t_{on}	---	75	ns
Turn-off time	3251	Test cond. A; V_{CC} = 10 Vdc; I_C = 100 mAdc; I_{B1} = 10 mAdc; I_{B2} = 5.0 mAdc			t_{off}	---	55	ns
Turn-off time	3251	Test cond. A; V_{CC} = 3.0 Vdc; I_C = 10 mAdc; I_{B1} = 1.0 mAdc; I_{B2} = 0.5 mAdc			t_{off}	---	45	ns
Storage time	3251	Test cond. A; V_{CC} = 10 Vdc; I_C = 10 mAdc; I_{B1} = 10 mAdc; I_{B2} = 10 mAdc			t_s	---	20	ns
* Subgroup 7			15	10				
High-temperature operation:		T_A = +150°C						
Collector to base cutoff current	3036	Bias cond. D; V_{CB} = 20 Vdc			I_{CBO}	---	50	µAdc
Low-temperature operation:		T_A = -65°C						
Forward-current transfer ratio	3076	I_C = 10 mAdc; V_{CE} = 1.0 Vdc; pulsed (see 4.4.1)			h_{FE}	20	---	---

TABLE II. Group B inspection.

Examination or test	MIL-STD-750		LTPD		Symbol	Limits		Unit
	Method	Details	Non TX	TX		Min	Max	
Subgroup 1			20	20				
Physical dimensions	2066	(See figure 1)			---	---	---	---
* Subgroup 2			15	15				
Solderability	2026				---	---	---	---

Source: https://assist.dla.mil -- Downloaded: 2016-12-03T23:47Z
Check the source to verify that this is the current version before use.

TABLE II. Group B inspection - Continued.

Examination or test	MIL-STD-750		LTPD		Symbol	Limits		Unit
	Method	Details	Non TX	TX		Min	Max	
Subgroup 2 - Continued								
Thermal shock (temperature cycling)	1051	Test cond. C; 10 cycles; time at temperature extremes = 15 minutes (minimum)			---	---	---	---
Thermal shock (glass strain)	1056	Test cond. A			---	---	---	---
Hermetic seal	1071	Test cond. G or H for fine leaks; test cond. A, C, D, or F for gross leaks			---	---	$1x10^{-7}$	atm cc/s
Moisture resistance	1021				---	---	---	---
End points:								
Collector to base cutoff current	3036	Bias cond. D; V_{CB} = 20 Vdc			I_{CBO}	---	50	nAdc
Forward-current transfer ratio	3076	I_C = 10 mAdc; V_{CE} = 1.0 Vdc; pulsed (see 4.4.1)			h_{FE}	40	120	---
Subgroup 3			15	15				
Shock	2016	Nonoperating; 1,500 G; 0.5 ms; 5 blows in each orientation: X_1, Y_1, Y_2, and Z_1			---	---	---	---
Vibration, variable frequency	2056				---	---	---	---
Constant acceleration	2006	20,000 G in each orientation: X_1, Y_1, Y_2, and Z_1			---	---	---	---
End points:								
(Same as subgroup 2)								
* Subgroup 4			20	20				
Terminal strength (lead fatigue)	2036	Test cond. E			---	---	---	---
End points:								
Hermetic seal	1071	Test cond. G or H for fine leaks; test cond. A, C, D, or F for gross leaks			---	---	$1x10^{-7}$	atm cc/s
Subgroup 5			20	20				
Salt atmosphere (corrosion)	1041				---	---	---	---
* Subgroup 6			5	λ=5				
High-temperature life (nonoperating) (TX types only)	1031	T_{stg} = +200°C			---	---	---	---

Source: https://assist.dla.mil -- Downloaded: 2016-12-03T23:47Z
Check the source to verify that this is the current version before use.

TABLE II. Group B inspection - Continued.

Examination or test	MIL-STD-750		LTPD		Symbol	Limits		Unit
	Method	Details	Non TX	TX		Min	Max	
Subgroup 6 - Continued								
High-temperature life (nonoperating) (Non-TX types only)	1032	T_{stg} = +200°C; time = 340 hours (see 4.3.4)			---	---	---	---
End points:								
Collector to base cutoff current	3036	Bias cond. D; V_{CB} = 20 Vdc			I_{CBO}	---	100	nAdc
Forward-current transfer ratio	3076	I_C = 10 mAdc; V_{CE} = 1.0 Vdc; pulsed (see 4.4.1)			Δh_{FE}	---	±25	% of initial recorded value
* Subgroup 7			5	λ=5				
Steady-state operation life (TX types only)	1026	T_A = +25°C; P_T = 360 mW; V_{CB} = 15 Vdc			---	---	---	---
Steady-state operation life (Non-TX types only)	1027	T_A = +25°C; P_T = 360 mW; V_{CB} = 15 Vdc; time = 340 hours (see 4.3.4)			---	---	---	---
End points:								
(Same as subgroup 6)								

TABLE III. Group C inspection.

Examination or test	MIL-STD-750		LTPD		Symbol	Limits		Unit
	Method	Details	Non TX	TX		Min	Max	
* Subgroup 1			10	10				
Resistance to solvents	---	MIL-STD-202, Method 215 (see 4.4.2)			---	---	---	---
Subgroup 2			λ= 7	---				
High-temperature life (non-operating) (Non-TX type only)	1031	T_{stg} = +200°C (see 4.3.4)			---	---	---	---
End points: (Same as subgroup 6 of group B)								
* Subgroup 3			λ= 7	---				
Steady-state operation life (Non-TX type only)	1026	T_A = 25°C; V_{CB} = 15 Vdc; P_T = 360 mW (see 4.3.4)			---	---	---	---
End points: (Same as subgroup 6 of group B)								

Source: https://assist.dla.mil -- Downloaded: 2016-12-03T23:47Z
Check the source to verify that this is the current version before use.

4.4 Methods of examination and test. Methods of examination and test shall be as specified in tables I, II, and III, and as follows:

4.4.1 Pulse measurements. Conditions for pulse measurement shall be as specified in section 4 of MIL-STD-750.

* 4.4.2 Resistance to solvents. Transistors shall be subjected to tests in accordance with Method 215 of MIL-STD-202. The following details shall apply:

(a) All areas of the transistor body where marking has been applied shall be brushed.
(b) After subjection to the tests there shall be no evidence of mechanical damage to the device and markings shall have remained legible.

4.5 Process-conditioning, testing, and screening for "TX" types. The procedure for process-conditioning, testing, and screening for "TX" types shall be in accordance with MIL-S-19500 and 4.5.1 through 4.5.9.1.

4.5.1 Quality assurance (lot verification). Quality assurance shall be in accordance with MIL-S-19500 except lot records shall be kept for 1 year minimum.

4.5.2 High-temperature storage. All devices shall be stored for at least 24 hours at a minimum temperature (T_A) of 200°C.

4.5.3 Thermal shock (temperature cycling). All devices shall be subjected to thermal shock (temperature cycling) in accordance with MIL-STD-750, method 1051, test condition C, except that 10 cycles shall be continuously performed and the time at the temperature extremes shall be 15 minutes, minimum.

4.5.4 Acceleration. All devices shall be subjected to acceleration test in accordance with MIL-STD-750, method 2006, with the following exceptions: The test shall be performed one time in the Y_1 orientation only, at a peak level of 20,000 G, minimum. The one-minute hold-time requirement shall not apply.

* 4.5.5 Hermetic seal tests. All devices shall be subjected to hermetic seal tests (fine leak followed by gross leak) with test conditions as specified in 4.5.5.1 and 4.5.5.2. Failed devices from either test shall be removed from the lot.

4.5.5.1 Fine-leak test. All devices shall be fine-leak tested in accordance with MIL-STD-750, method 1071, test condition G or H; except the leak-rate rejection criterion shall be 1×10^{-7} cubic centimeters of helium per second when measured at a differential pressure of one atmosphere.

4.5.5.2 Gross-leak test. All devices shall be tested for gross-leaks in accordance with MIL-STD-750, method 1071, test condition A, C, D or F.

* 4.5.6 Reverse bias. All devices shall be subjected to reverse bias with the following test sequence and end point measurements:

(a) V_{CB} = 15 Vdc, I_E = 0 for 48 hours (minimum) at T_A = +150°C (heat sink may be used).
(b) At the end of the high temperature test time, the case temperature shall be lowered until T_C = 30 ±5°C is attained. This case temperature shall be maintained prior to removal of reverse bias voltage.
(c) No other voltages or temperatures shall be applied to the devices before taking the end point measurements.
(d) Within 24 hours following bias removal, measure I_{CBO} as specified in table IV. The manufacturer, at his option, may use a 72 hour maximum criteria if it is demonstrated (at 72 hours) for three consecutive lots to the qualifying activity that readings of 99% of all devices remain stable within + 10% of the 24 hour reading.

Source: https://assist.dla.mil -- Downloaded: 2016-12-03T23:47Z
Check the source to verify that this is the current version before use.

4.5.7 Preburn-in tests. The parameters I_{CBO} and h_{FE} of table IV shall be measured and the data recorded for all devices in the lot. All devices shall be handled or identified such that the delta end points can be determined after the burn-in test. All devices which fail to meet these requirements shall be removed from the lot and the quantity removed shall be noted on the lot history.

TABLE IV. Burn-in test measurements.

Test	MIL-STD-750		Symbol	Limits		Unit
	Method	Details		Min	Max	
Collector to base cutoff current	3036	Bias cond. D; V_{CB} = 20 Vdc	I_{CBO}	---	50	nAdc
Forward-current transfer ratio	3076	V_{CE} = 1.0 Vdc I_C = 10 mAdc pulsed (see 4.4.1)	h_{FE}	40	120	---

4.5.8 Burn-in test. All devices shall be operated for 168 hours minimum under the following conditions:

T_A = 25 ±3°C V_{CB} = 12 Vdc P_T = 360 mW

(No heat sink or forced air directly on the devices shall be permitted.)

4.5.9 Post burn-in tests. The parameters I_{CBO} and h_{FE} of table IV shall be retested after burn-in and the data recorded for all devices in the lot. The parameters measured shall not have changed during the burn-in test from the initial value by more than the specified amount as follows:

ΔI_{CBO} = 100 percent or 5 nanoampere, whichever is greater

Δh_{FE} = ±15 percent

4.5.9.1 Burn-in test failures (screening). All devices that exceed the delta (Δ) limits of 4.5.9 or the limits of table IV after burn-in, shall be removed from the inspection lot and the quantity removed shall be noted on the lot history. If the quantity removed after burn-in should exceed 10 percent of the number of devices subjected to the burn-in test, the entire inspection lot shall be unacceptable for the "TX" types.

5. PREPARATION FOR DELIVERY

5.1 See MIL-S-19500, section 5.

6. NOTES

6.1 Notes. The notes specified in MIL-S-19500 are applicable to this specification.

6.2 Ordering data.

(a) Lead finish if other than gold-plated (see 3.3.1).
(b) Lead material (see 3.3.1.1).
(c) Inspection data (see 4.3).

* 6.3 Changes to previous issue. The margins of this specification are marked with an asterisk to indicate where changes (additions, modifications, corrections, deletions) from the previous issue were made. This was done as a convenience only and the Government assumes no liability whatsoever for any inaccuracies in these notations. Bidders and contractors are cautioned to evaluate the requirements of this document based on the entire content irrespective of the marginal notations and relationship to the last previous issue.

Source: https://assist.dla.mil -- Downloaded: 2016-12-03T23:47Z
Check the source to verify that this is the current version before use.

Custodians:
Army - EL
Navy - EC
Air Force - 17

Review activities:
Army - MI
Navy -
Air Force - 11, 70, 80
DSA - ES

User activities:
Army - SM
Navy - CG, MC, OS, AS, SH
Air Force - 13, 15, 19, 80

Preparing activity:
Navy - EC

Agent:
DSA - ES

(Project 5961-0226)

Source: https://assist.dla.mil -- Downloaded: 2016-12-03T23:47Z
Check the source to verify that this is the current version before use.

SPECIFICATION ANALYSIS SHEET

Form Approved
Budget Bureau No. 22-R255

INSTRUCTIONS: This sheet is to be filled out by personnel, either Government or contractor, involved in the use of the specification in procurement of products for ultimate use by the Department of Defense. This sheet is provided for obtaining information on the use of this specification which will insure that suitable products can be procured with a minimum amount of delay and at the least cost. Comments and the return of this form will be appreciated. Fold on lines on reverse side, staple in corner, and send to preparing activity. Comments and suggestions submitted on this form do not constitute or imply authorization to waive any portion of the referenced document(s) or serve to amend contractual requirements.

SPECIFICATION

ORGANIZATION

CITY AND STATE

CONTRACT NUMBER

MATERIAL PROCURED UNDER A

☐ DIRECT GOVERNMENT CONTRACT ☐ SUBCONTRACT

1. HAS ANY PART OF THE SPECIFICATION CREATED PROBLEMS OR REQUIRED INTERPRETATION IN PROCUREMENT USE?

A. GIVE PARAGRAPH NUMBER AND WORDING.

B. RECOMMENDATIONS FOR CORRECTING THE DEFICIENCIES

2. COMMENTS ON ANY SPECIFICATION REQUIREMENT CONSIDERED TOO RIGID

3. IS THE SPECIFICATION RESTRICTIVE?

☐ YES ☐ NO *(If "yes", in what way?)*

4. REMARKS *(Attach any pertinent data which may be of use in improving this specification. If there are additional papers, attach to form and place both in an envelope addressed to preparing activity)*

SUBMITTED BY *(Printed or typed name and activity - Optional)*

DATE

DD FORM 1 JAN 66 1426

REPLACES EDITION OF 1 OCT 64 WHICH MAY BE USED.

S/N-0102-014-1801 C-25254

Source: https://assist.dla.mil -- Downloaded: 2016-12-03T23:47Z
Check the source to verify that this is the current version before use.

FOLD

DEPARTMENT OF THE NAVY
NAVAL ELECTRONIC SYSTEMS COMMAND
WASHINGTON, D. C. 20360

POSTAGE AND FEES PAID
NAVY DEPARTMENT

OFFICIAL BUSINESS

COMMANDER
NAVAL ELECTRONIC SYSTEMS COMMAND
DEFENSE STANDARDIZATION PROGRAM BRANCH
DEPARTMENT OF THE NAVY
WASHINGTON, D. C. 20360

FOLD

Source: https://assist.dla.mil -- Downloaded: 2016-12-03T23:47Z
Check the source to verify that this is the current version before use.