METRIC

MIL-STD-1678-5B
12 February 2016
SUPERSEDING
MIL-STD-1678-5A
6 April 2015

DEPARTMENT OF DEFENSE
STANDARD PRACTICE

FIBER OPTIC CABLING SYSTEMS REQUIREMENTS AND MEASUREMENTS

(Part 5: DESIGN PHASE, SUPPLEMENTAL AND LEGACY MEASUREMENTS)

(PART 5 OF 6 PARTS)

AMSC N/A

AREA 60GP

Source: https://assist.dla.mil -- Downloaded: 2016-12-31T21:08Z
Check the source to verify that this is the current version before use.

FOREWORD

1. This Department of Defense Standard Practice is approved for use by the DLA Land and Maritime Columbus, Defense Logistics Agency, and is available for use by all Departments and Agencies of the Department of Defense.

2. Comments, suggestions or questions on this document should be addressed to DLA Land and Maritime Columbus, ATTN: VAT, Post Office Box 3990, Columbus, OH 43218-3990, or emailed to FiberOpticGroup@dla.mil. Since contact information can change, you may want to verify the currency of this address information using the ASSIST Online database at https://assist.dla.mil.

3. This standard practice provides detailed information and guidance to personnel concerned with ensuring standardization of fiber optic cable topologies (optical fiber cabling and associated components) on military mobile vehicles used in air, land, and sea applications. In general, the requirements and methods specified herein are not identifiable to any specific mobile vehicle class or type, but are intended to standardize and minimize variations in requirements, test setups, test measurement procedures, test sample fabrication configurations, and other aspects that must be addressed for completeness. Where specified, constrains for usage or platform types will be listed. The term "platform" will be used to refer to the military mobile vehicles in general or, where designated, one particular class (such as "aircraft platform") or one particular type within that class (such as "F-35").

4. In order to provide flexibility in the use and update of the different aspects for requirements and methods, this standard practice is issued in five parts; as follows:

Part 1: Design, installation and maintenance requirements. This part addresses design requirements for platforms that use cable harnesses as the means to transport data through optical fiber among communication network and end user equipment. Larger platforms that route trunk cables through cableways and drop cables to the end user (application equipment), can cite applicable requirements in Part 1 of the Standard Practice and augment them with use of MIL-HDBK-2051 and MIL-STD-2042 as appropriate. Surface ships and submarines, are to use MIL-HDBK-2051 and MIL-STD-2042 in lieu of Part 1 of this Standard Practice.

Part 2 Optical measurements. Part 2 of this standard practice addresses further details to refine or bound (constrain) the performance of each optical test measurement addressed. The test methods, such as those in a TIA-455 series standard or military standard/specification, are cited already. This part of the standard practice augments the test method in the standard or specification to ensure consistency with setup and measurement procedure. This consistency minimizes variations when comparing data obtained from different test laboratories (including commercial, vendor, Government and Government contractor).

Part 3 Environmental, mechanical and physical measurements. Part 3 of this standard practice addresses further details to refine or bound (constrain) the performance of each environmental (including material), mechanical and physical test measurement or inspection addressed. The test methods, such as those in a TIA-455 series standard or military standard/specification, are cited already. This part of the standard practice augments the test method to ensure consistency with setup, measurement procedure, data recording/analysis and other factors critical to conducting or evaluating test performance. This consistency minimizes variations when comparing data obtained from different test laboratories (including commercial, vendor, Government, and Government contractor).

Part 4 Test sample preparation/fabrication requirements. Part 4 of this standard practice addresses further details to refine or bound (constrain) the preparation and fabrication of test samples for the fiber optic components addressed. Fabrication methods, such as those in the Shipboard installation standard, MIL-STD-2042, or in the general series aircraft maintainer's manual, NAVAIR 01-1A-505-4/TO 1-1A-14-1, are cited already. This part of the standard practice augments the fabrication method to ensure consistency with use of the same components (such as cable types) and processes.

Source: https://assist.dla.mil -- Downloaded: 2016-12-31T21:08Z
Check the source to verify that this is the current version before use.

Part 5 Design phase, supplemental and legacy measurements. Tests that are more unique to the design phase or tests and inspections that are not just primarily for qualification (supplemental measurement) are addressed in Part 5 of this standard practice. Also, legacy test methods and legacy criteria measurements are provided in part of the standard practice with the recommended replacement method for the former (legacy) DOD-STD-1678 test methods. These former DOD-STD-1678 test methods are listed under the constraint that they be used only with the specific military specifications or commercial standards in which they are cited. The intent is to delete each DOD-STD-1678 test method from that standard practice in Part 5 once its reference from military specification or commercial standard is removed.

Part 6 Parts and support equipment commonality and standardization requirements This part of the Standard Practice addresses component part and support equipment standardization requirements for platforms that transport data through optical fiber among communication network and end user equipment. Surface ships and submarines are to use the Navy Shipboard Fiber Optic Recommended Components Parts List in addition to part 6 of this Standard Practice. Likewise, larger platforms that route trunk cables through cableways and drop cables to the end user (application equipment), can cite applicable requirements in Part 6 of the Standard Practice, cite the Navy shipboard Fiber Optic Recommended Components Parts List, or both, as appropriate. The Navy shipboard Fiber Optic Recommended Components Parts List can be obtained at the Navy Shipboard fiber optic website. Due to the dynamic nature of web addresses, the current website URL can be obtained by e-mailing DLGR_NSWC_FOWEB@navy.mil with the subject line 'WEBSITE URL REQUEST". An automated reply will contain the current web address.

Source: https://assist.dla.mil -- Downloaded: 2016-12-31T21:08Z
Check the source to verify that this is the current version before use.

CONTENTS

PARAGRAPH		PAGE
1.	SCOPE	1
1.1	Scope	1
1.1.1	Applicability	1
1.2	Intended uses for Part 5	1
1.2.1	Primary uses of Part 5	1
1.2.2	Supplemental use	1
1.2.3	Constraints on use	1
2.	APPLICABLE DOCUMENTS	2
2.1	General	2
2.2	Government documents	2
2.2.1	Other Government documents	2
2.3	Non-Government documents	2
2.4	Order of precedence	2
3.	DEFINITIONS	3
3.1	General fiber optics terms	3
3.2	Acronyms	3
3.3	Parameter, application	3
3.4	Qualification testing, general	3
3.5	Qualification testing, QPL process	3
3.6	Single parameter testing	3
4.	GENERAL REQUIREMENTS	4
4.1	Test sample configurations	4
4.2	Environmental conditions	4
4.3	Test conditions	4
4.4	Laser and fiber optic safety compliance	4
4.5	Use of a standardize approach	4
4.5.1	Design (developmental) testing	4
4.5.2	Legacy support processes	4
4.5.3	Residual DOD-STD-1678 content	4
4.5.3.1	Restrictions on use	4
4.5.4	Supplemental measurements and inspections	5
4.6	Inspection by attributes	5
5.	DETAILED REQUIREMENTS	5
5.1	Design phase measurements	5
5.1.1	Temperature-altitude	5
5.1.2	Accelerated stress (vibration with temperature stimuli)	5
5.2	Supplemental measurements and inspections	5
5.2.1	End face geometry inspection	5
5.2.2	Ferrule end face inspection	5
5.3	Supplemental support processes	5
5.3.1	Preconditioning thermal cycling of temperature range 2 cable	5
5.4	Legacy criteria for measurements and support processes	5
5.4.1	Launch conditions	5
5.4.2	Change in optical transmittance	5
5.4.3	Attenuation rate legacy criteria	5
5.5	Legacy measurements, residual DOD-STD-1678 Methods	5
5.5.1	Low temperature flexibility (cold bend), Method 2020	6
5.5.2	Power transmission versus temperature, Method 4010	6
5.5.3	Power transmission versus humidity, Method 4030	6
5.5.4	Freezing water immersion – ice crush, Method 4050	6

Source: https://assist.dla.mil -- Downloaded: 2016-12-31T21:08Z
Check the source to verify that this is the current version before use.

PARAGRAPH		PAGE
6.	NOTES	7
6.1	Intended use	7
6.2	Acquisition requirements	7
6.3	Subject term (key word) listing	7
6.4	Changes from previous issue	7
6.5	Single versus multiple parameter testing	7
6.5.1	Approach for qualification	7
6.5.2	Approach for design phase (developmental) testing	7
6.6	Superseding document	7
DESIGN PHASE MEASUREMENTS		
5101	Temperature-altitude	9
5102	Accelerated stress (vibration with temperature stimuli)	15
SUPPLEMENTAL MEASUREMENTS AND INSPECTIONS		
5201.1	End face geometry inspection	31
5202	Ferrule end face visual inspection	42
5203	FOVIS with display/automated capture and analysis software evaluation criteria	50
SUPPLEMENTAL SUPPORT PROCESSES		
5301	Precondition thermal cycling of temperature range 2 cable	59
LEGACY CRITERIA FOR MEASUREMENTS AND SUPPORT PROCESSES		
5401	Launch conditions legacy criteria	62
5402	Change in optical transmittance	68
5403	Attenuation rate legacy criteria	70
5404	Ferrule end face visual inspection legacy alternate criteria	79
LEGACY MEASUREMENTS, RESIDUAL DOD-STD-1678 METHODS		
5501	Low temperature flexibility (cold bend), Method 2020	73
5502	Power Transmission vs. temperature, Method 4010	92
5503	Power Transmission vs. humidity, Method 4030	98
5504	Freezing water immersion – ice crush, Method 4050	103

Source: https://assist.dla.mil -- Downloaded: 2016-12-31T21:08Z
Check the source to verify that this is the current version before use.

1. SCOPE

1.1 Scope. Part 5 of this standard practice provides further details to refine or bound (constrict) the performance of each legacy measurement addressed.

1.1.1 Applicability. Part 5 of this Standard Practice was developed to retain applicable legacy test requirements, test methods, and support processes to be used for performing testing of fiber optic components. The rapidly changing state of the art in fiber optic technology makes it essential that some degree of flexibility be exercised in enforcing this document. When there is a conflict between this document and the platform specification or contract, the platform specification or contract shall take precedence. Where obsolescence or other issues are such that the measurement requirements specified for the refinement or bound (constraint) herein cannot be implemented, users shall submit a description of the issue along with a request for clarification or with proposal for redefining the requirement to consider for incorporation into this standard practice to: DLA Land and Maritime Columbus, ATTN: VAT, Post Office Box 3990, Columbus, OH 43218-3990, or emailed to FiberOpticGroup@dla.mil.

1.2 Intended uses for Part 5.

1.2.1 Primary use of Part 5. Part 5 of this standard practice was prepared primarily to augment developmental testing performed prior to qualification. Also, Part 5 has evolved to include both (1) supplemental tests and inspections that are more general (not only a part of design(including development), qualification or both) and (2) similar criteria (requirements) for different applications than ones listed in other parts of this standard practice.

1.2.2 Supplemental use. Part 5 of this standard practice is intended to retain measurements or their support processes that were once cited in other parts of this standard practice, or their precursors, and are relevant to retain for legacy purposes.

1.2.2.1 Residual DOD-STD-1678 content. Part 5 addresses some test methods cited in former DOD-STD-1678. Although the test methods cited in DOD-STD-1678 are considered obsolete, a few military specifications and commercial standards still refer to some of the test methods. This residual DOD-STD-1678 content is provided under the restrictions listed in 4.5.3.1.

1.2.3 Constraints on use. Part 5 of this standard practice is not intended to be used in lieu of a test laboratory developing test procedures specific to their test instrumentation and test equipment/apparatus.

Source: https://assist.dla.mil -- Downloaded: 2016-12-31T21:08Z
Check the source to verify that this is the current version before use.

2. APPLICABLE DOCUMENTS

2.1 General. The documents listed in this section are specified in sections 3, 4, and 5 of this standard practice. This section does not include documents cited in other sections of this standard practice or recommended for additional information or as examples. While every effort has been made to ensure the completeness of this list, document users are cautioned that they must meet all specified requirements of documents cited in sections 3, 4, and 5 of this standard practice, whether or not they are listed.

2.2 Government documents.

2.2.1 Other Government documents, drawings, and publications. The following other Government documents, drawings, and publications form a part of this standard practice to the extent specified herein. Unless otherwise specified, the issues are these documents are those cited in the solicitation or contract.

NAVAIR 01-1A-505-4/T.O.1-1A-14-4/ TM 1-1500-323-24-4 - Installation and Testing Practices Aircraft Fiber Optic Cabling.

(A copy of this document is available online at: https://mynatec.navair.navy.mil. NATEC has three difference processes to obtain the manual, depending on if you are Government personnel (military and civilians), Contractors with a Government contract, or everyone else. If unable to access this Web Site or require further assistance, contact (1) NATEC Customer Service: 619.545.1888, (2) NATEC Website Status Hotline: 619.545.1706, or (3) NATEC Customer Service E-mail: nani_customerservice@navy.mil.)

2.3 Non-Government publications. The following documents form a part of this document to the extent specified herein. Unless otherwise specified, the issues of these documents are cited in the solicitation or contract.

LASER INSTITUTE of AMERICA (LIA)

LIA Z136.1 - Safe Use of Lasers.

(Copies are available from http://www.laserinstitute.org or the Laser Institute of America, 12424 Research Parkway, Suite 125, Orlando, FL 32826.)

TELECOMMUNICATIONS INDUSTRY ASSOCIATION (TIA)

TIA-440 - Fiber Optic Terminology.
TIA/EIA-455 Standard Test Procedure for Fiber Optic Fibers, Cables, Transducers, Sensors, Connecting and Terminating Devices, and Other Fiber Optic Components

(Copies are available from http://www.global.ihs.com or to Global Engineering Documents, 1990 M Street NW, Suite 400, Washington, DC 20036.)

2.4 Order of precedence. Unless otherwise noted herein or in the contract, in the event of a conflict between the text of this document and the references cited herein, the text of this document takes precedence. Nothing in this document, however, supersedes applicable laws and regulations unless a specific exemption has been obtained.

Source: https://assist.dla.mil -- Downloaded: 2016-12-31T21:08Z
Check the source to verify that this is the current version before use.

3. DEFINITIONS

3.1 General fiber optics terms. Definitions for general fiber optic terms used din this standard practice are in accordance with TIA440 “except as otherwise specified in 3.1.1 and herein”. Definitions for other terms as they are used in this standard practice are given in the following paragraphs.

3.1.1 Standard ization for usage of terms (spelling).

a. Fiber optic. The word "optic" appears without an "s"' when the term "fiber optic" is used as an adjective, such as "fiber optic cable", "fiber optic component". Example of a usage is "The fiber optic system is comprised of fiber optic cable with fiber optic connectors, but without any fiber optic splices."
b. Fiber optics. The word "optics" appears with an "s"' when the term "fiber optics" is used as a noun, such as " fully fiber optics". Example of a usage is "The system is comprised of both wiring media and fiber optics."
c. Multimode. The word "multimode" appears as one word as opposed to two words or two words separated by a hyphen. Example of a usage is "The cable in the system is comprised of fiber optic, multimode cable."
d. Single mode. The word "single mode" appears as two words as opposed to one word or two words separated by a hyphen. Example of a usage is "The cable in the system is comprised of fiber optic, single mode cable."

3.2 Acronyms. The following acronyms are used in this standard practice:

DUT	Device under test
FOCT	Fiber optic cable topology

3.3 Parameter, application. One criterion (a performance parameter) specified for a physical, mechanical, environmental, or material condition as a performance requirement of a FOCT (fiber optic cable topology) component. A value and unit of measure is included as part of the performance requirement for each criterion. Physical conditions include dimensional/geometry, weight, markings, and fabrication technique/workmanship. Mechanical conditions include pull (elongate/compress), twist, bend, incline, crush, vibrate, impact/shock. Environmental conditions include temperature, humidity, and altitude/pressure. Material conditions include conductivity and expose to or immersion in flame, fluids, fungus, simulated salt air (with and without combustion products) and ozone.

3.4 Qualification testing, general. Formal testing designed to demonstrate that the software and hardware of a system meet specified requirements. Qualification testing may be accomplished at any time during the life of a system, such as during prototype development, manufacturing, shipment, storage, installation, and operation. Most often the qualification testing is conducted to determine the extent to which a system passes a specified set of performance criteria.

3.5 Qualification testing, QPL process. For purposes of this standard practice, qualification testing is refined and bounded to the term as used for Government Qualified Products List (QPL) testing or inspection. This testing is performed to determine if the FOCT (fiber optic cable topology) component or DUT (device under test) meets the requirements specified in the fiber optic component applicable military specification. Physical, optical, mechanical, environmental and material testing is performed in specified test sequences. One parameter is tested at a time. Successful completion places the DUT onto the QPL for that FOCT component military specification. Other terminology is to be used in lieu of qualification for any prototype development, manufacturing, shipment, storage, installation, and operational testing.

3.6 Single parameter testing. A test performed where only one mechanical, environmental or material application parameter is applied.

Source: https://assist.dla.mil -- Downloaded: 2016-12-31T21:08Z
Check the source to verify that this is the current version before use.

4. GENERAL REQUIREMENTS

4.1 Test sample configurations. Unless otherwise specified, test sample configurations shall comply with 4.1 in Part 2 of this standard practice.

4.2 Environmental conditions. Test equipment to perform the optical test measurements must be placed in an area in which specified ambient temperature and humidity conditions are maintained. "Standard Ambient" conditions (23 ±5°C/73 ±9°F and 20 percent to 70 percent RH), in accordance with TIA/EIA-455, is acceptable if the test equipment is built to operate throughout that ambient temperature and humidity range. If not, then the "Controlled Ambient" conditions (23 ±2°C/73 ±4°F and 45 percent to 55 percent RH) are to be followed. Testing can be performed only when the acceptable conditions exist for uncontrolled spaces where local weather is normally within the "Standard Ambient" range (or the specified test equipment operating ambient conditions, whichever is more conservative).

4.3 Test conditions. Unless otherwise specified, test sample conditions shall comply with 4.5 in Part 2 of this standard practice. These test conditions include test interruption, test recording requirements for environmental chambers, multiple channel optical monitoring, and recording and verifying pass/fail criteria.

4.4 Laser and fiber optic safety compliance. At a minimum, compliance should include the precautions of 4.5 cited in Part 2 of this standard practice. Refer to LIA Z136.1 for full technical definitions. Refer to NAVAIR 01-1A-505-4/T.O. 1-1A-14-4/TM 1.1500-323-24-4 for a laser safety refresher summary and tailor to application.

4.5 Use of a standardized approach. Part 5 of this Standard Practice was developed to retain applicable legacy test requirements, test methods, and support processes to be used for performing testing of fiber optic components. In addition, Part 5 was developed to standardize on testing that may be performed that is unique to the design phase of the product development or are more general supplemental tests and inspections. It became evident that standardization must be maintained to ensure that the risk to the Government of accepting bad test/measurement data was low. Without standardization; setup, testing, and data extraction/analysis did not provide consistent conditions or were of questionable stability. To minimize test variations and permit more accurate comparison of test results from multiple sources, a "standardized" approach evolved. Use of the legacy measurements in lieu of the standardized or "prescription" approach, as cited in the other parts of this standard practice, shall be used only when specified in the contract or military specification. The three applications where design phase and legacy testing shall be used are cited in 4.5.1 through 4.5.4.

4.5.1 Design phase (developmental) testing. Unless otherwise specified, standardize on setup and contents of testing performed for component development and prototype efforts. Where applicable, testing specified for qualification shall be used or included. As required, multiple parameter testing specified as the applicable measurements under design phase testing in Part 5 of this standard practice shall be considered to augment the design phase test or test sequence.

4.5.2 Legacy support processes. Unless otherwise specified, the measurements and support processes cited in the other parts of this standard shall be used. For purposes of supporting already performed legacy testing and where suitability for developmental testing necessitates its use, the legacy support processes in Part 5 of this standard practice shall be considered to support verification of legacy test results and to complete an otherwise lacking developmental test setup or test process.

4.5.3 Residual DOD-STD-1678 content. Unless otherwise specified, the test methods cited in DOD-STD-1678 are considered obsolete; however, a few military specifications and commercial standards still refer to some of the test methods. These test methods are provided in this part of the standard with the recommended replacement method.

4.5.3.1 Restrictions on use. These residual DOD-STD-1678 test methods are contained in Part 5 of this standard practice under the constraint that they be used only with the specific military specifications or commercial standards in which they are cited. The intent is to delete each DOD-STD-1678 test method from that standard practice in Part 5 once its reference from current military specifications or commercial standards is removed completely.

Source: https://assist.dla.mil -- Downloaded: 2016-12-31T21:08Z
Check the source to verify that this is the current version before use.

4.5.4 Supplemental measurements and inspections. Measurements and inspections that are general, and do not neatly fit into developmental tests, qualification tests, or both may be placed in Part 5 rather than other parts of this standard practice. Likewise, measurements and inspections that are similar to those in other parts of this standard practice, but for different applications, are included in Part 5. Unless otherwise specified, standardize on measurements in other parts of this standard practice when there is a similar measurements cited in both part 5 and another part.

4.6 Inspection by attributes. The random sampling alternative and inspection by attributes are applicable for the specified quality conformance inspections only. For design phase (or developmental) testing, for qualification and for initial validation of the process, inspection shall be performed on 100 percent of samples with data supplied. Data includes a value and unit of measure for each measurement required on each sample. Inspection by attributes is inspection in which each sample is measured then rated as conforming or nonconforming with respect to a given specification requirement or set of requirements.

5. DETAILED REQUIREMENTS

5.1 Design phase measurements. Measurements shall be implemented as specified in 5.1.1 and 5.1.2.

5.1.1 Temperature-altitude. Measurements shall be performed to Measurement 5101.

5.1.2 Accelerated stress (vibration with temperature stimuli). Measurement shall be performed to Measurement 5102.

5.2 Supplemental measurements and inspections. Measurements and inspections shall be implemented as specified in 5.2.1 through 5.2.3.

5.2.1 End face geometry inspection. Measurement inspections shall be performed to Measurement 5201.

5.2.2 Ferrule end face visual inspection. Measurement inspections shall be performed to Measurement 5202.

5.2.3 FOVIS with display/automated capture and analysis software evaluation criteria. Measurement inspections shall be performed to Measurement 5203.

5.3 Supplemental support processes. Supplemental support process shall be implemented as specified in 5.3.1.

5.3.1 Preconditioning thermal cycling of temperature range 2 cable. Process shall be performed to Supplemental Support Process 5301.

5.4 Legacy criteria for measurements and support processes. Legacy measurements and support processes shall be implemented as specified or defined for historical purposes as listed in 5.3.1 through 5.3.3.

5.4.1 Launch conditions. Measurement support criteria contents shall be listed only for historical information as Measurement Support Process 5401.

5.4.2 Change in optical transmittance. Measurement criteria contents shall be listed only for historical information as Measurement 5402.

5.4.3 Attenuation rate legacy criteria. Measurement criteria contents shall be listed only for historical information as Measurement 5403.

5.5 Legacy measurements, residual DOD-STD-1678 methods. Alternative processes for measurements or the original methods, as applicable, shall be implemented as specified in 5.3.1 through 5.3.4 (see table I, Original DOD-ST-D678 methods and MIL-STD-1678-5 alternative methods).

Source: https://assist.dla.mil -- Downloaded: 2016-12-31T21:08Z
Check the source to verify that this is the current version before use.

TABLE I. Original DOD-STD-1678 methods and MIL-STD-1678-5 alternative methods.

DOD-STD-1678 legacy test method	MIL-STD-1678-5 alternative test method
2020	5501
4010	5502
4030	5503
5040	5504

5.5.1 Low power flexibility (cold bend), Method 2020. Alternative process for measurements or the original Method 2020, as applicable, shall be performed to Measurement 5501.

5.5.2 Power transmission versus temperature, Method 4010. Alternative process for measurements or the original Method 4010, as applicable, shall be performed to Measurement 5502.

5.5.3 Power transmission versus humidity, Method 4030. Alternative process for measurements or the original Method 4030, as applicable, shall be performed to Measurement 5503.

5.5.4 Freezing water immersion – ice crush, Method 4050. Alternative process for measurements or the original Method 4050, as applicable, shall be performed to Measurement 5504.

6. NOTES

(This section contains information of a general or explanatory nature that may be helpful, but is not mandatory.)

6.1 Intended use. The measurements depicted in this standard practice are intended for qualification testing; however, they are applicable for other types of test or evaluation programs that require these specific measurements for fiber optic cabling components used on military mobile vehicles (such as platforms).

6.2 Acquisition requirements. Acquisition documents should specify the following:

a. Title, number, and date of this standard practice.

6.3 Subject term (key word) listing.

Fiber optic cabling
Legacy optical measurements

6.4 Change notations. The margins of this specification are marked with vertical lines to indicate modifications generated by this change. This was done as a convenience only and the Government assumes no liability whatsoever for any inaccuracies in these notations. Bidders and contractors are cautioned to evaluate the requirements of this document based on the entire content irrespective of the marginal notations.

6.5 Single versus multiple parameter testing. The different philosophies for qualification versus developmental testing are elaborated further in 6.5.1 and 6.5.2. Methods to perform selected multiple parameter tests as part of the component development cycle are included as measurements in Part 5 of this standard practice.

Source: https://assist.dla.mil -- Downloaded: 2016-12-31T21:08Z
Check the source to verify that this is the current version before use.

6.5.1 Approach for qualification. For Qualified Products List (QPL) testing (hereinafter, qualification testing) of fiber optic cable topology (FOCT) components, the approach, in general, is to test one parameter at a time. For mechanical testing, the test sequence is performed from least severe to most severe. For environmental testing, a test sequence was selected based on service conditions and impact from previous tests. The same components go through the entire mechanical or the entire environmental test sequence. In this manner, the components are subjected to a pseudo accelerating aging or lifetime usage. This sequence is done to provide a “more confidence” factor while still testing one parameter at a time. FOCT components tested to date that meet this single parameter testing have performed successfully in the intended application. No justification exists to impose multiple parameter testing requiring more elaborate test apparatus for purposes of verifying each performance requirement is met.

6.5.2 Approach for design phase (developmental) testing. For the design phase of new components, performance under a variety of conditions may be imposed. This is done to ensure potential failure mechanisms are not accelerated significantly when induced with conditions from multiple parameters. This testing is done to assess impact on a component type, not for vendor specific product. Once verified in the design phase testing cycle, multiple parameter testing is excluded in component qualification.

6.6 Superseding document. The five parts of the standard practice replaces superseded DOD-STD-1678 with completely new fiber optic requirements and measurements. With the exception of some legacy material in Part 5 of this standard practice, none of the fiber optic test and measurement material comprising superseded DOD-STD-1678 has been included. Also, no methods in superseded DOD-STD-1678 have been revised in this standard practice. With the exceptions noted in Part 5 of this standard practice, this standard practice should be applied in lieu of the legacy methods in superseded DOD-STD-1678.

Source: https://assist.dla.mil -- Downloaded: 2016-12-31T21:08Z
Check the source to verify that this is the current version before use.

DESIGN PHASE MEASUREMENTS

5101 - 5102

Source: https://assist.dla.mil -- Downloaded: 2016-12-31T21:08Z
Check the source to verify that this is the current version before use.

TEMPERATURE-ALTITUDE.

1. Purpose. This multiple parameter measurement is performed when there is the requirement to subject the FOCT (fiber optic cable topology) component or device under test (DUT) to cyclic effect for the two stimuli of temperature and altitude. This multiple parameter test is not intended to be used as part of qualification testing. Measurement 5101 is intended to standardize on the multiple parameter testing when the two test parameters or stimuli are temperature and altitude as part of prototype or developmental test effort. The applicable commercial test standards cited are for temperature cycling (TIA-455-3) and altitude (TIA-455-15) with imposing further refinements or boundaries (constraints). To ensure that the risk to the Government of accepting bad optical measurement data is low, to minimize test variations and to permit more accurate comparison of test results from multiple sources, a “standardized” approach is specified to perform this measurement.

2. APPLICABLE DOCUMENTS

2.1 General. The documents listed in this section are specified in sections 3, 4, and 5 of this specification. This section does not include documents cited in other sections of this specification or recommended for additional information or as examples. While every effort has been made to ensure the completeness of this list, document users are cautioned that they must meet all specified requirements of documents cited in sections 3, 4, and 5 of this specification, whether or not they are listed.

2.2 Non-Government publications. The following documents form a part of this document to the extent specified herein. Unless otherwise specified, the issues of these documents are those cited in the solicitation or contract.

TELECOMMUNICATIONS INDUSTRY ASSOCIATION (TIA)

TIA-455-3-	Procedure to Measure Temperature Cycling Effects on Optical Fibers Units, Optical Cable, and Other Passive Fiber Optic Components.
TIA-455-15-	Altitude/Immersion of Fiber Optic Components.
TIA-455-20-	Optical Fibres 1-46: Measurement Methods and Test Procedures: Monitoring of Changes in Optical Transmittance.

(Copies are available from http://www.global.ihs.com or to Global Engineering Documents, 1990 M Street NW, Suite 400, Washington, DC 20036.)

2.3 Order of precedence. Unless otherwise noted herein or in the contract, in the event of a conflict between the text of this document and the references cited herein, the text of this document takes precedence. Nothing in this document, however, supersedes applicable laws and regulations unless a specific exemption has been obtained.

3. DEFINITIONS.

3.1 Altitude test. A test performed to determine the integrity of a DUT sealing surfaces/devices and operational capability when simulating rapid descents from a high altitude.

3.2 Temperature cycling test. A test performed to determine the capability of an operational DUT when simulating temperature changes in the surrounding environment.

4. Test setup.

4.1 DUT submergence. The test samples shall not be submerged in a water tank within the chamber as specified in TIA-455-15.

Source: https://assist.dla.mil -- Downloaded: 2016-12-31T21:08Z
Check the source to verify that this is the current version before use.

4.2 DUT cabling connections. DUT cabling connections that interface with the ports on optical measurement instrumentation shall not be submerged and shall be either routed outside the chamber or to an optical interface port (at a plugged port hole in the chamber wall) so that during test, optical measurements can be obtained. The change in optical transmittance shall be measured during and after the test.

4.3 Test fixture and other non DUT masses inside the chamber.

4.3.1 Test fixture. If used, test fixture must be of minimum mass and approved by the Government technical authority.

4.3.2 Non DUT masses. No other mass (item that causes significant thermal lag) shall be added inside the chamber.

5. Test procedure.

5.1 Test method. DUT (test samples) shall be tested in accordance with TIA-455-3 for temperature and in accordance with TIA-455-15 for altitude using the number of cycles, test condition schedule, and ramp/soak times in accordance with table 5101-I. The first 166 minutes of the profile shown in figure 5101-1 is one cycle (one and a half cycles shown in the figure for clarity). This test shall consist of a total of 1,000 cycles.

5.1.1 Modification of the temperature cycle. The temperature cycling limits may be modified for conformance with the operating temperature range. If done, durations for both temperature and altitude cycles shall be modified also so that the same ramp rates occur and the same temperature cycling soak times are maintained. The checklist in appendix A is provided to ensure compliance for inspection purposes.

5.2 Optical measurements.

5.2.1 Change in optical transmittance The change in optical transmittance shall be measured during and after the test (from a baseline obtained before each test) in accordance with TIA-455-20 for transmitted power adhering strictly to the setup and test procedure specified in Measurement 2102 from MIL-STD-1678 part 2. At a minimum for the "during test" measurements, an optical transmittance measurement shall be performed towards the end of each high temperature and low temperature soak period (maintain step in table 5101-I) and at the ambient soak period while at altitude after every 50 cycles.

5.2.2 Optical instrumentation capacity. This optical monitoring assumes that an optical measurement system is available with a sufficient channel measurement capacity. This capability reduces the number of both optical sources and monitoring channels required to one (one monitoring channel is needed for monitoring and compensating for drift in each optical source used).

5.2.3 Insertion loss. If more than the specified number of test samples is used (or that size exceeds test channel capacity), then test samples not selected for the change in optical transmittance measurement shall be measured for insertion loss. Insertion loss measurements shall be performed before the test sequence and after the conclusion of the test sequence.

5.3 Post test visual examination. Inspection of the DUT shall reveal no leakage or other apparent loss of sealing capability, no surface or identification marking impairment, nor any damage detrimental to the operation of the test samples.

5.4 End face geometry. When test samples are comprised of connectors or termini, the ferrule end face of each connector/termini mated pair shall be inspected for end face geometry. Inspection for end face geometry shall be performed before the test sequence and after the conclusion of the test sequence. Ferrule end face geometry shall be inspected as specified in Measurement 5201.

Source: https://assist.dla.mil -- Downloaded: 2016-12-31T21:08Z
Check the source to verify that this is the current version before use.

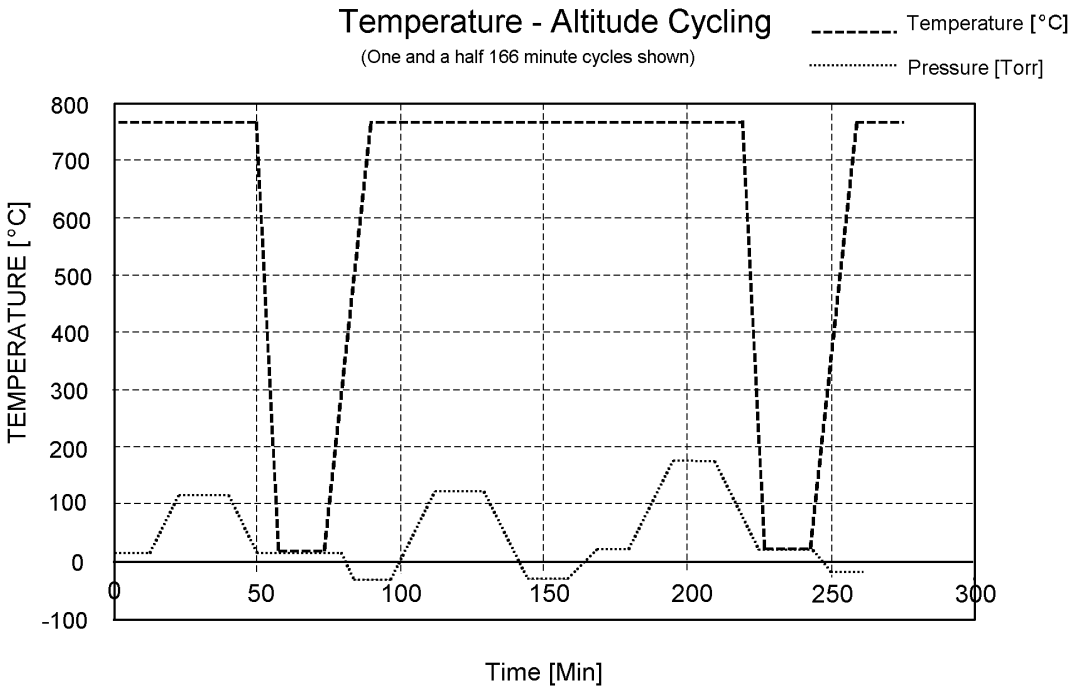

FIGURE 5101-1. Temperature and altitude profiles.

TABLE 5101-I. Ramp and soak limits for one cycle, profiles for temperature-altitude cycling.

Time (minutes)	Temperature (^{o}C) 1/	Altitude (Torr)
0	25	760
15	25	760
25	125	760
40	125	760
50	25	760
55	25	33
70	25	33
75	25	760
81.5	-40	760
96.5	-40	760
113	125	760
128	125	760
144.5	-40	760
159.5	-40	760
166	25	760

1/ Ramp rate for temperature is 10°C per minute, soak time (maintain step) is 15 minutes at high and low temperature plateaus.

2/ Ramp rate for altitude is 5 minutes from atmosphere (760 Torr) to altitude (70,000 ft).Soak time (maintain step) is 15 minutes at altitude. Temperature during altitude ramp and soak is 25°C (for this 25 minute duration).

Source: https://assist.dla.mil -- Downloaded: 2016-12-31T21:08Z
Check the source to verify that this is the current version before use.

5.5 Contamination. When test samples are comprised of connectors or termini, the ferrule end face of each connector/termini mated pair shall be inspected for cleanliness after the completion of the test or during specified points during and after the completion of the test, as specified. Inspection shall be performed using a Fiber Optic Video Inspection System (FOVIS). As an option, each end face shall be captured using software provided with the FOVIS. For each cleaning operation performed, a table is requested to summarize the number of cleaning steps, cleaning device, cycle used, and result.

6. NOTES.

6.1 Intended use, developmental testing and evaluations. This test is to be used for developmental test and evaluation purposes only. Testing of a new design in development or performed as part of an evaluation is meant to discover flaws or defects. Multiple parameter testing (such as parameters of temperature and altitude) may uncover flaws more readily than single parameter testing; however, the parameter most critical to the failure is not identified. Also, multiple parameter testing may induce combined stresses or a degree of combined stresses not found in-service. The most significant stress conditions must be identified during developmental testing. These conditions are then incorporated into single parameter testing for qualification to show compliance with specification requirements.

6.2 Source for profiles. The temperature and altitude profiles for aircraft applications were developed by representatives from the reliability, wiring, and standards & technology communities.

Source: https://assist.dla.mil -- Downloaded: 2016-12-31T21:08Z
Check the source to verify that this is the current version before use.

APPENDIX A

MINIMUM ESSENTIAL CHECKLIST FOR TEMPERATURE ALTITUDE MEASUREMENTS

A.1 Purpose. This appendix addresses a checklist of the minimum essentials for the temperature-altitude measurement.

A.2 Usage. Table 5101 A-I is the checklist of minimum essentials for Government auditors, or their representatives, use during inspections. This checklist should be expanded at the auditor's discretion.

TABLE 5101 A-I. Minimum essential checklist for temperature-altitude measurements.

Item	Category	Description	Requirement	Compliance
1	Test sample configuration	Cable assembly length:	10 meters minimum (13 m if 3 cut-backs)	
		Connectors & splices	Complies with Part 4 of this standard practice	
2	Room ambient environmental condition	Standard Ambient (if test equipment built to operate in this range, if not-then controlled ambient)	23 ±5°C/73 ±9°F and 20 percent to 70 percent RH	
		Controlled Ambient	23 ±2°C/73 ±4°F and 45 percent to 55 percent RH	
3	Test condition	Test setup cable routing	Bend diameters ≥ min long term bend diameter	
			Sharp twists and bends avoided	
			Avoid protrusions/other obstacles	
4	Environmental chamber charts	Temperature & altitude profiles recorded	Chart, stored data on disk, other approved means	
			Includes chamber model and serial, date of test	
	Test equipment	Pertains to items 5 to 6		
5	Environmental chamber	Temperature rate of change	Meets 10°C/min minimum, both heating and cooling	
		Altitude rate of change	Meets 760 to 33 Torr in 5 minutes minimum	
		Programmable to perform cycles show in table 1	1,000 cycles at 166 minutes/cycle	
6	Optical measurements	Change in optical transmittance	Compliance with Measurement 2101	
		Insertion loss	Compliance with Measurement 2102	
		Optical signal discontinuity	Compliance with Measurement 2104	
7	Sample size	Determined by statistical analysis and reliability	Sample size shown to be sufficient by Chi-square, student-t, normal distribution or other statistical/reliability means.	
8	Examinations	Visual inspection	No leakage, loss of sealing capacity, damage detrimental to operation.	
		Ferrule end face contamination	FOVIS inspected and cleaned. Table provided summarizing cleaning steps, cleaning device, cycle used, and result.	
		Ferrule end face geometry	Compliance with Measurement 5201	

Source: https://assist.dla.mil -- Downloaded: 2016-12-31T21:08Z
Check the source to verify that this is the current version before use.

TABLE 5101 A-I. Minimum essential checklist for temperature-altitude measurements - Continued.

Item	Category	Description	Requirement	Compliance
9	Test setup	Optical fiber connections	Routed outside chamber or to an optical interface port at chamber wall	
		Test fixture, if used	Minimize mass	
			Approved by Government tech authority	
			No other mass inside chamber	
		Items to minimize variation in test	Secure/tie down cables (no move at instrument ports)	
10	Test	Test processes	Compliance with Measurement 5101	
		Maintain setup during test (source end)	No disconnection allowed until after testing completed (see measurements 2101, 2102, 2104)	
		Temperature-altitude cycle	Graph or electronic means to verify cycles per table 5101-I are obtained	
		Alteration in temperature cycle limits, if altered	Same ramp rates occur	
			Same temperature soak times maintained	
11	Calculation	Electronically calculated	Verify proper equation in program	
		Operator performed calculations	Verify correct method used and calculated properly	
12	Data sheet	Approved data sheet	Compliance with Measurement 2201	
		Added data sheet requirement	Chamber heating and cooling rates	
			Chamber atmosphere to altitude ramp rates	
		Temperature & altitude instrumentation	Equipment information and calibration data	
13	Pass/fail criteria	Proper criteria specified	Conforms with SPEC/contract parameters and values	
		Proper criteria implemented	Test operators knows if fail and to verify result	

A.3 NOTES.

A.3.1 Intended use.

A.3.1.1 Audit team. This checklist is intended to assist Government auditors or their representatives during inspections of the optical measurement system. This checklist may be augmented at the auditor's discretion; however, it is not to be reduced.

A.3.1.2 Test laboratories. When test laboratories prepare to perform optical measurements or audits, this checklist should be used to supplement Measurement 5101, not replace it.

Source: https://assist.dla.mil -- Downloaded: 2016-12-31T21:08Z
Check the source to verify that this is the current version before use.

ACCELERATED STRESS (VIBRATION WITH TEMPERATURE STIMULI)

1. Purpose. This multiple parameter measurement is performed when there is the requirement during the design phase to identify design weaknesses in the FOCT (fiber optic cable topology) component or device under test (DUT). This multiple parameter test is not intended for use as part of qualification testing. Measurement 5102 is intended to standardize on the multiple parameter testing when the two test parameters or stimuli are multiple axes vibration and temperature cycling as part of prototype or developmental test effort. The applicable commercial test standards cited are for vibration (TIA-455-11) and temperature cycling (TIA-455-3) with imposing further refinements or boundaries (constraints) as tailored below. To minimize test variations and to permit more accurate comparison of test results from multiple sources, a "standardized" approach to induce the stimuli is specified for stressing the DUT.

2. APPLICABLE DOCUMENTS. See appendix A and appendix B.

3. DEFINITIONS.

3.1 Accelerated stress test. Testing performed in which higher levels of stimuli (such as single axis vibration, multiple axes vibration, constant temperature, temperature cycling, humidity, and altitude) than seen in the actual operating environment are applied to stress a DUT over a shortened time. This application of the stimuli is made with the assumption that the DUT will produce the same weaknesses (such as failure mechanisms) as would occur when the same stimuli profiles are applied at lower levels over a longer timeframe.

3.2 HALT (Highly Accelerated Life Test). Stimuli expected to most weaken or induce failure mechanisms in the DUT are applied at higher levels over a shorter duration then seen in the DUT operating environment. The intent of performing a HALT is to find DUT weaknesses in the design stage of the product. The key point is that HALT is performed during the design stage, not for product screening or qualification. When the step stress tests to determine the limits for applied stimuli are grouped with the accelerated stress test (as done in Measurement 5102), this grouping (or combination testing) may be considered a HALT.

3.3 Operational limit (operating limit) for an applied stimulus. The highest stimulus level at which a DUT shows no degradation in operation. This stimulus level is found by increasing the level of the stimulus until degradation in DUT operation is obtained, then decreasing this stimulus level to the previous working level. If the DUT returns to operation after a decrease to the previous stimulus level, then this previous working level is specified as the operational vibration limit. If degraded operation is obtained at the previous vibration stimulus level, then the failure mode must be determined and corrective action take place before further testing to determine the limit.

3.4 Operational limit (operating limit) for multiple applied stimuli. The last stimuli levels at which a DUT shows no degradation in operation. Applied stimuli for temperature are at the determined upper temperature limit and lower temperature limit. The vibration stimulus is increased until degradation in DUT operation is obtained. Next, this vibration stimulus level is decreased to previous working level. If the DUT returns to operation after a decrease to the previous vibration stimulus level, then this previous working level is specified as the operational vibration limit. If degraded operation is obtained at the previous vibration stimulus level, then the failure mode must be determined and corrective action take place before further testing to determine the limit.

3.5 Specification limit. Limit defined in the contract requirements or the military specification.

3.6 Temperature test. Testing performed to determine the capability of an operational DUT when stimulating the added thermal stress of temperature in a vibration environment.

3.7 Vibration test. Testing performed to determine the integrity (such as structural or sealing) and operational capability when simulating vibrations that may be encountered with sinusoidal and random vibration profiles. Alternately, testing performed to determine the integrity (structural or sealing) and operational capability when stimulating vibrations at a specified Grms level with an uncontrolled vibration envelop (spectrum) in multiple axes using a repetitive shock impacts.

Source: https://assist.dla.mil -- Downloaded: 2016-12-31T21:08Z
Check the source to verify that this is the current version before use.

4. Test setup.

4.1 DUT configuration. The test samples and cable assemblies shall be prepared as specified in the military specification or applicable contractual document. If a housing is included as part of the DUT, holes shall be made to maximize air flow and heat transfer.

4.2 DUT optical measurements. DUT cabling connections shall be connected to the optical measurement instrumentation and measurements performed in accordance with Measurement 2102 (for Change in Optical Transmittance) and Measurement 2104 (for Optical Signal Discontinuity) in MIL-STD-1678 part 2.

4.2.1 Optical signal discontinuity. Monitor a minimum of four channels per DUT for optical signal discontinuity during the test.

4.2.2 Change in optical transmittance. Monitor all DUT channels for change in optical transmittance before and after each test condition.

4.3 Instrumentation used. Refer to Measurement 1202 (for change in optical transmittance) and Measurement 1024 (for optical signal discontinuity) in MIL-STD-1678 part 2.

4.3.1 Vibration isolation for optical measurement instrumentation. Ensure that optical equipment is isolated from vibration. Surface vibration transmitted from the test apparatus can adversely affect instrumentation and connections at the optical ports. One method for isolation is to place optical instrumentation on foam pads or other type of resilient surface.

4.4 Test fixture and other non-DUT masses inside the chamber.

4.4.1 Test fixture mass. If used, test fixture must be of minimum mass and approved by the Government technical authority.

4.4.2 Non-DUT masses. Minimum other mass (item that causes significant thermal lag) shall be added inside the chamber.

4.5 Methods to employ during vibration setup for connectors.

4.5.1 Test fixture integrity. The test fixture must be tested prior to fiber optic component qualification to verify no resonance occurs within the frequency range being tested.

4.5.2 Location of cable supports. The first set of cable supports after exiting the connector shall be located a minimum of 20.23 cm (8 inches) from the back end (tip) of a connector strain relief. A set implies cable supports at each end of a connector mated pair.

4.5.3 Tension in cables exiting the connector. Portion of cabling exiting the connector and secured to the cable support is to be kept straight (parallel to the axial, versus radial, direction of the connector) but allow up to 3.81 cm (1.5 inch) deflection or movement (deflect cable 3.81 cm (1.5 inch) from horizontal or straight run).

4.5.4 Isolated cable supports. The first set of cable supports after exiting the connector shall be isolated from (not affixed to or supported by) the vibration table.

Source: https://assist.dla.mil -- Downloaded: 2016-12-31T21:08Z
Check the source to verify that this is the current version before use.

4.5.5 External cable support structure. For large vibration machines where the table length exceeds the location where the first cable supports, an external cable support structure may be constructed. In one configuration, the first cable support may be affixed to the external cable support structure and suspended from above the vibration table. The external cable support structure must be isolated from the vibration table (machine).

4.5.6 Securing cable from DUT to cable supports. Cable that is exiting the connector is as straight as feasible before placement onto the cable support. Cable may be secured to the cable support by means of tie wraps. Tie wraps are to be snug so that movement of the cable is restricted, but tie wrap exerts minimum pressure on the cables. If alternate means to secure the cables are used, this same restricted movement with minimum pressure on the cables is to be observed. For most applications, 101 mm (4-inch) long tie wraps may be used. SAE-AS33671 electrical tie down straps, adjustable, plastic, type I, class 1, miniature, 18 pound, minimum tensile strength (such as P/N MS3367-4-9, NSN 5975-00-727-5153 or P/N MS3367-4-0, NSN 5957-00-903-2284) or other equivalent commercial self-locking cable ties.

4.5.7 Maintain minimum bend diameter. No cable bend is to exceed (be smaller than) the long term, minimum bend diameter of cable either at or after the cable support.

4.6 Accelerometer setup.

4.6.1 Accelerometer orientation. Orient accelerometer along the 3 principal axes of the DUT. The accelerometer shall be rigidly secured and located on the test fixture foundation as near as possible to the DUT, but not on the DUT itself.

4.6.2 Accelerometer mounting. Stud mounting accelerometer to supplemental fixture is preferred mounting method. Mount accelerometer to fixture using supplied mounting studs or supplied screws (such as Allen head cap screws). When used, tighten Allen head cap screws to torque specified on the accelerometer parameter sheet.

4.6.3 Cleaning microdot connector signal pins. Clean microdot connector signal pins using isopropyl alcohol. Connect one end to the appropriate accelerometer for axis under test. Connect the remaining end to the charge amp input.

4.6.4 Data acquisition connection. Connect the accelerometer amplifier BNC output to the data acquisition interface box using suitable BNC-BNC cable. Connect to appropriate data acquisition channel.

4.6.5 Amplifier setup. Set the amplifier sensitivity and set amplifier settings to provide a recording capability at 80 percent of the data acquisition card range.

a. Set the lower frequency limit at 2 Hz or as applicable.

b. Set the upper frequency limit at 1 kHz or as applicable.

c. Move power switch to “On”.

d. Verify that batteries, if used, are charged. Replace or recharge batteries as required.

4.6.6 Accelerometer parameters. The accelerometer shall be calibrated to at least ± 5 percent over the frequency range of 5 to 2000 Hz. The amplitude of the accelerometer shall be calibrated to at least ±5 percent over the frequency range of 5 to 2000 Hz. The accelerometer selected for a vibration sensor should have a fundamental resonant frequency that is not less than 10,000 Hz.

4.6.7 Data acquisition setup for accelerometer. Ensure acceptable optical signal trace by verifying that no saturation of the optical trace has occurred. Flat horizontal lines in the signal trace close to the baseline (0 dB) or close to optical signal peaks is an indication of amplifier saturation. For example, using a -10 volt to +10 volt signal, a data acquisition board would clip (become saturated) at ±10 volts. A flat line signal is a voltage level greater than +10 volts or less than –10 volts and is beyond the capability of the data acquisition system to measure it.

MEASUREMENT 5102

Source: https://assist.dla.mil -- Downloaded: 2016-12-31T21:08Z
Check the source to verify that this is the current version before use.

4.7 Torque. For multiple termini connectors with coupling rings, apply specified torque and mark position as indicated below.

4.7.1 Applying torque. Prior to testing, initial mate and apply specified torque value.

4.7.2 Marking coupling ring position. Mark position after torque applied and check/record position after each axis. The performance of the connector assembly is based upon the dimensions that exist with the connector tightened properly and the mating components completely seated. This is especially true in connectors that use spring loaded inserts and elastic environmental seals/gaskets that must be properly preloaded/pre-stressed to function according to design parameters. Either the tightening torque should be specified, a final dimension or check mark established, or the connector tightened until no free play exists between the receptacle and the plug portion. Since the condition of "no free play" is somewhat indefinable and usually no marks are provided, the tightening torque specified for the connector must be used. The marking is also critical in determining if the change in measured performance is caused by the connector becoming loose. Vibration is a mechanical test and the energy imparted should not create any movement any of the connector components, which could degrade the optical performance of the assembly (including loosening). Usually, accelerometers or other instrumentation is used to determine the response of items under test. However, due to the size and shape of connectors this is difficult to accomplish. Visual observation of alignment marks is an easy and efficient method to determine if the impact is causing an undesirable condition. Consideration should be given to identifying/specifying the amount of looseness that is acceptable. Ideally there should be no loosening whatsoever.

4.7.3 Connectors with ratchet mechanism. For a mating connector containing a coupling ring ratchet mechanism or where specified for a particular connector type, do not tighten during testing.

4.8 Controller temperature sensor.

4.8.1 Temperature parameters. Accuracy of the temperature sensor shall be at least ±1°C. Response time shall be no greater than 5 seconds from 0°C to 100°C.

4.8.2 Measurement point. The temperature sensor used in the control of the environmental chamber (cabinet) temperature shall be located as close to the DUT as feasible.

4.8.3 Temperature offset parameter. An offset parameter may be used to compensate for measuring the temperature within the DUT versus the air within the environmental chamber. For instance, to achieve an 85°C temperature within a particular DUT at a specified ramp rate, the temperature offset was determined to be 115°C (a 30°C offset). When a temperature offset is used, this offset shall not cause the DUT to be exposed above any material limit that comprises the DUT.

4.9 Temperature chamber temperature. Test charts are required for tests performed in environmental chambers and contain recordings of the environmental conditions (such as temperature and vibration) inside the chamber. The test chart is to include the environmental chamber manufacturer, model, and serial number with the date of the recording. In lieu of test charts, objective evidence that test requirements were achieved whether it be circular chart, stored data on disk or by other means approved by the applicable Government activity. Any stored data must be retained and made available at Government request.

5 Test procedure.

5.1 Determine limits for applied stimuli. When limits for the applied stimuli are not specified, these limits shall be determined in accordance with 5.1.1 through 5.1.4. Applicable limits used shall comply with 3.3 and 3.4.

5.1.1 Low temperature limit. A step stress test shall be performed to determine the operational limit for the applied stimulus of low temperature. Starting at an "ambient" temperature of 20°C +/ 2°C, the temperature (stimulus) shall be decreased in steps of 10°C +/ 2°C until the limit for an applied stimulus is found (see 3.3). The soak time at each temperature step shall be a minimum of 5 minutes once the target temperature is obtained. The soak time may be increased when a longer duration is needed to obtain measurements. The low temperature shall not be reduced below any material limit that compromises the DUT.

MEASUREMENT 5102

Source: https://assist.dla.mil -- Downloaded: 2016-12-31T21:08Z
Check the source to verify that this is the current version before use.

5.1.2 High temperature limit. A step stress test shall be performed to determine the operational limit for the applied stimulus of high temperature. Starting at an "ambient" temperature of 20°C ± 2°C, the temperature (stimulus) shall be increased in steps of 10°C ± 2°C until the limit for an applied stimulus is found (see 3.3). The soak time at each temperature step shall be a minimum of 5 minutes once the target temperature is obtained. The soak time may be increased when a longer duration is needed to obtain measurements. The high temperature shall not be raised above any material limit that compromises the DUT.

5.1.3 Temperature stress test. The low temperature and high temperature limits shall be the limits determined in 5.1.1 and 5.1.2. The test shall consist of 5 cycles at each ramp rate until the applied stimulus for the ramp rate limit is found (see 3.3). Each cycle shall consist of a ramp to and hold (such as soak time) at one temperature limit, followed by a ramp to and hold at the other temperature limit, then return. Ramp at the maximum rate that the chamber can perform.

5.1.4 Vibration limit. Perform either 5.1.4.1 (optional) or 5.1.4.2 (optional), then 5.1.4.3.

5.1.4.1 Exploratory vibration (optional test). Purpose is to identify frequencies at which resonance occurs to test at these frequencies in the endurance test. No damage is expected. Perform a quick-look preliminary sweep to identify critical frequencies. Corrective measures or specific instrumentation can be implemented before proceeding to 5.1.4.3. The exploratory vibration shall be performed in accordance with appendix A.

5.1.4.2 Single axis vibration. Purpose is to perform a repeatable test that can accurately reproduce a vibration profile. Corrective measures or specific instrumentation can be implemented before proceeding to 5.1.4.3. The single axis vibration shall be performed in accordance with appendix B.

5.1.4.3 Multiple axes vibration. Purpose is to induce vibration in multiple axes at the same time while controlling (limiting) the acceleration (Grms) in one particular axis. The multiple axes vibration shall be performed in accordance with appendix C.

5.2 Accelerated stress test. Perform accelerated stress test using multiple axes vibration. Purpose is to induce the DUT with multiple stimuli (in this test the stimuli are vibration in multiple axes with temperature cycling). The accelerated stress test shall be performed in accordance with appendix D.

5.3 Data sheet. In addition to the items for the standard data sheet specified in MIL-STD-1678 part 2 Measurement 2201, the data sheet shall list the items in 5.3.1 through 5.3.4.

5.3.1 Type of vibration machine.

5.3.2 Type of mounting fixture. Mounting fixture includes not only means to secure the DUT to the vibration table but also any supplemental mounting plates used to secure the DUT to the test fixture, and mounting plates used to secure the test fixture to the vibration machine.

5.3.3 Axis/direction. Axis/direction for the maximum applied Grms if not in the vertical axis.

5.4 Safety. Safety items include, but are not limited to, those listed in 5.4.1 through 5.4.3.

5.4.1 Sign. Post sign stating "VIBRATION TEST IN PROGRESS" where appropriate.

5.4.2 Ear protection. Verify all personnel in the facility are wearing their ear protection in a proper manner as required.

5.4.3 Setup Inspection. Inspect setup to ensure that torque on applicable bolts is to proper values and mechanical components are locked/in proper position prior to performing the test.

5.5 Relevant failures. A listing of relevant failures for the DUT is provided in appendix E.

5.6 Compliance verification. The checklist in appendix F is provided to ensure compliance for inspection purposes.

MEASUREMENT 5102

Source: https://assist.dla.mil -- Downloaded: 2016-12-31T21:08Z
Check the source to verify that this is the current version before use.

6 NOTES

6.1 Intended use, developmental testing during design phase. This test is to be used for developmental test and evaluation purposes only. Testing of a new design in development or performed as part of an evaluation is meant to discover design defects. Multiple parameter testing (such as parameters of temperature and vibration) may uncover flaws more readily than single parameter testing; however, the parameter most critical to the failure is not identified. Also, multiple parameter testing may induce combined stresses or a degree of combined stresses not found in-service. The purpose of the accelerated stress testing is to determine the weak links and make the design as robust as feasible within cost and other constraints. These features are then incorporated into the applicable military specifications allowing single parameter testing for qualification to show compliance with specification requirements.

Source: https://assist.dla.mil -- Downloaded: 2016-12-31T21:08Z
Check the source to verify that this is the current version before use.

APPENDIX A

PROCESS FOR EXPLORATORY VIBRATION.

A.1 Purpose. This appendix supplements 5.1.4.1 of Measurement 5102 by providing the process to perform the exploratory vibration.

A.2. APPLICABLE DOCUMENTS

A.2.1 General. The documents listed in this section are specified in section A.3 of this specification. This section does not include documents cited in other sections of this specification or recommended for additional information or as examples. While every effort has been made to ensure the completeness of this list, document users are cautioned that they must meet all specified requirements of documents cited in sections A.3 of this specification, whether or not they are listed.

A.2.2 Non-Government publications. The following documents form a part of this document to the extent specified herein. Unless otherwise specified, the issues of these documents are those cited in the solicitation or contract.

TELECOMMUNICATIONS INDUSTRY ASSOCIATION (TIA)

TIA-455-11 - Vibration Test Procedure for Fiber Optic Components and Cables.

(Copies are available from http://www.global.ihs.com or to Global Engineering Documents, 1990 M Street NW, Suite 400, Washington, DC 20036.)

A.2.3 Order of precedence. Unless otherwise noted herein or in the contract, in the event of a conflict between the text of this document and the references cited herein (except for related specification sheets), the text of this document takes precedence. Nothing in this document, however, supersedes applicable laws and regulations unless a specific exemption has been obtained.

A.3 Sine (swept sine) vibration. Sine (swept sine) vibration in accordance TIA-455-11, test condition III tailored using the vibration input (amplitude) versus frequency range in table 5102 A-I and modified durations specified herein. Vibration shall be performed at ambient temperature only. This cycle shall be performed 12 times in each of three mutually perpendicular directions at ambient temperature. This results in a total of 36 cycles being applied for approximately 12 hours. The sequence shall be repeated twice (36 hours total at ambient temperature). Interruptions are permitted provided the requirements for rate of change and test duration are met. Completion of cycling within any separate band is permissible before proceeding to the next band.

TABLE 5102 A-I. Sine vibration parameter inputs.

Frequency range	Vibration Input
10 – 50 Hz	254 mm/sec
50 – 140 Hz	1.5 mm double amplitude
140 – 2000 Hz	60 G

Source: https://assist.dla.mil -- Downloaded: 2016-12-31T21:08Z
Check the source to verify that this is the current version before use.

APPENDIX B

PROCESS FOR SINGLE AXIS VIBRATION

B.1 Purpose. This appendix supplements 5.1.4.2 of Measurement 5102 by providing the process to perform the single axis vibration.

B.2. APPLICABLE DOCUMENTS

B.2.1 General. The documents listed in this section are specified in sections B.3 of this specification. This section does not include documents cited in other sections of this specification or recommended for additional information or as examples. While every effort has been made to ensure the completeness of this list, document users are cautioned that they must meet all specified requirements of documents cited in sections B.3 of this specification, whether or not they are listed.

B.2.2 Non-Government publications. The following documents form a part of this document to the extent specified herein. Unless otherwise specified, the issues of these documents are those cited in the solicitation or contract.

TELECOMMUNICATIONS INDUSTRY ASSOCIATION (TIA)

TIA-455-11 - Vibration Test Procedure for Fiber Optic Components and Cables.

(Copies are available from http://www.global.ihs.com or to Global Engineering Documents, 1990 M Street NW, Suite 400, Washington, DC 20036.)

B.2.3 Order of precedence. Unless otherwise noted herein or in the contract, in the event of a conflict between the text of this document and the references cited herein (except for related specification sheets), the text of this document takes precedence. Nothing in this document, however, supersedes applicable laws and regulations unless a specific exemption has been obtained.

B.3 Random vibration. Random vibration shall be performed in accordance with TIA-455-11, test condition VII - letter J. Duration shall be 8 hours in the longitudinal direction (orientation parallel to the optical fiber length and designated at the z axis) and 8 hours in the radial or transverse direction (orientation parallel to the optical fiber end cross section and in the x-y plane) for a total of 16 hours. For a DUT that is not symmetrical in two axes, testing shall be performed in the third orthogonal axis. Vibration test shall be done at the low temperature limit in accordance with 5.1.1. Vibration test shall be repeated at the high temperature limit in accordance with 5.1.2. Calculated overall Grms value from vibration machine controller shall be provided for the test at each temperature. This test shall then be repeated, except instead of using “Letter J”, testing shall be done at 1.1, 1.3, and 1.5 times the specified power spectrum density.

Source: https://assist.dla.mil -- Downloaded: 2016-12-31T21:08Z
Check the source to verify that this is the current version before use.

APPENDIX C

PROCESS FOR MULTIPLE AXES VIBRATION.

C.1 Purpose. This appendix supplements 5.1.4.3 of Measurement 5102 by providing the process to perform the multiple axes vibration.

C.2 Step stress test. A step stress test shall be performed to determine the limit for the applied stimulus for vibration. Starting at an applied acceleration of 5 Grms, the vibration (stimulus) shall be increased in steps of 5 Grms until the limit for an applied stimulus is found (see 3.3). The hold time at each vibration step shall be a minimum of 10 minutes. The hold time may be increased when a longer duration is needed to obtain measurements. Vibration shall be induced by repetitive shock impacts (such as by striking the vibration table with pneumatic impact hammers). The vertical axis (the axis towards and away from the center of the earth) shall be used as the control axis and the axis in which the maximum acceleration occurs.

Source: https://assist.dla.mil -- Downloaded: 2016-12-31T21:08Z
Check the source to verify that this is the current version before use.

APPENDIX D

PROCESS FOR ACCELERATED STRESS TEST WITH MULTIPLE AXES VIBRATION.

D.1 Purpose. This appendix supplements 5.2 of Measurement 5102 by providing the process to perform the multiple axes vibration.

D.2 Accelerated stress test. An accelerated stress test shall be performed to determine the operating limit for the applied stimulus for multiple axes vibration and temperature cycling. Vibration cycling and temperature cycling shall be conducted simultaneously.

D.2.1 Vibration. Start at one-fifth the maximum Grms level (determined in 5.1.4.3) and go through one full temperature cycle. Increase the Grms level by another one-fifth the maximum Grms level and perform another full temperature cycle. Repeat this sequence until the maximum Grms level is obtained or until a fault (failure) is induced. Vibration shall be induced by repetitive shock impacts (such as by striking the vibration table with pneumatic impact hammers). The vertical axis (the axis towards and away from the center of the earth) shall be used as the control axis and the axis in which the maximum acceleration occurs.

D.2.2 Temperature. Temperature cycle shall be performed as specified in 5.1.3.

Source: https://assist.dla.mil -- Downloaded: 2016-12-31T21:08Z
Check the source to verify that this is the current version before use.

APPENDIX E

DUT RELEVANT FAILURES FOR ACCELERATED STRESS TEST

E.1 Purpose. This appendix provides the definition of relevant failures for the DUT.

E.2 Operation parameters.

E.2.1 Mechanical deterioration. Inability to mechanically uncouple. For instance, the inability of a connector plug and receptacle to properly mate and un-mate during or after the completion of the test shall be cause for failure of the DUT.

E.2.2 Physical deterioration. Evidence of any of the following defects after the test shall be cause for failure of the DUT:

a. Broken or excessively worn engaging hardware.

b. Uneven wear or galling of hardware, guide pins, or mating surfaces.

c. Excessive debris from worn surfaces.

d. Damage or wear to seals, if applicable.

e. Displaced, bent, broken, or chipped parts.

f. Scratching of the interface area.

g. Leaking of filling of potting compounds.

h. Relative motion between cable and connector/splice parts.

i. Physical distortion/wear resulting in fatigue or failure.

j. Separation of bonded surfaces.

k. Connectors shall not exhibit loosening of parts for the range of frequencies tested (unless otherwise specified).

NOTE: Unless damage causes unacceptable impairment of equipment performance, results in a hazard, or results in substantially shortened equipment useful life, minor physical damage to the tested item, such as small cracks, minor yielding of structure, out of tolerance clearances, and similar damage may not be cause for test disapproval if such damage is accepted by the technical agent for the Government acquisition authority.

E.2.3 Optical performance.

a. Maximum allowed change (discontinuity) in optical signal amplitude during vibration (in dB).

b. Maximum allowed duration of optical signal discontinuity for multimode DUT/channels.

c. Maximum allowed duration of optical signal discontinuity for single mode DUT/channels.

d. Maximum allowed change in optical transmittance after each test condition (in dB).

Source: https://assist.dla.mil -- Downloaded: 2016-12-31T21:08Z
Check the source to verify that this is the current version before use.

E.2.4 End face geometry. When test samples are comprised of connectors or termini, the ferrule end face of each connector/termini mated pair shall be inspected for end face geometry. Inspection for end face geometry shall be performed before the test sequence and after the conclusion of the test sequence. Ferrule end face geometry shall be inspected as specified in Measurement 5201.

E.2.5 Contamination. When test samples are comprised of connectors or termini, the ferrule end face of each connector/termini mated pair shall be inspected for cleanliness after the completion of the test or during specified points during and after the completion of the test, as specified. Inspection shall be performed using a Fiber Optic Video Inspection System (FOVIS). As an option, each end face shall be captured using software provided with the FOVIS. For each cleaning operation performed, a table is requested to summarize the number of cleaning steps, cleaning device, cycle used, and result.

E.2.6 Non-relevant failures. Examples of non-relevant failures include, but are not limited to, damage caused by maintenance error or operating error, secondary failures caused by test equipment, and failures due to improper installation or setup.

Source: https://assist.dla.mil -- Downloaded: 2016-12-31T21:08Z
Check the source to verify that this is the current version before use.

APPENDIX F

MINIMUM ESSENTIAL CHECKLIST FOR ACCELERATED STRESS MEASUREMENTS
(MULTIPLE AXES VIBRATION WITH TEMPERATURE CYCLING)

F.1. Purpose. This appendix addresses a checklist of the minimum essentials for the temperature-altitude measurement.

F.2. Usage. Table 5102 F-I is the checklist of minimum essentials for Government auditors, or their representatives, use during inspections. This checklist should be expanded at the auditor's discretion.

TABLE 5102 F-I. Minimum essential checklist for accelerated stress measurements.

Item	Category	Description	Requirement	Compliance
1	Test sample configuration	Cable assembly length:	10 meters minimum (13 m to do 3 cut-backs)	
		Connectors and splices	Complies with Part 4 of this standard practice	
2	Room ambient environmental condition	Standard Ambient (if test equipment built to operate in this range, if not-then controlled ambient)	23°C ± 5°C/73°F ± 9°F and 20 percent to 70 percent RH	
		Controlled ambient	23°C ± 2°C/73°F ± 4°F and 45 percent to 55 percent RH	
3	Test condition	Test setup cable routing	Bend diameters ≥ min long term bend diameter	
			Sharp twists & bends avoided	
			Avoid protrusions/other obstacles	
4	Environmental chamber charts	Temperature profiles and vibration responses recorded	Chart, stored data on disk, other approved means	
			Includes chamber model & serial, date of test	
	Test equipment	Pertains to items 5 to 6		
5	Environmental chamber	Programmable to perform specified temperature steps and cycles and vibration steps	Temperature steps: 10 °C step increases and decreases	
			Temperature cycles: ramp done at maximum rate for chamber to max and min op temperature limits	
			Vibration only steps: 5 Grms step increases	
			Vibration with temp cycling steps: 1/5 max Grms step increases with full temp cycle at each vibration step	
6	Optical measurements	Change in optical transmittance	Compliance with measurement 2101	
		Optical signal discontinuity	Compliance with measurement 2104	
7	Sample size	Determined by statistical analysis and reliability	Sample size shown to be sufficient by Chi-square, student-t, normal distribution or other statistical/reliability means	

Source: https://assist.dla.mil -- Downloaded: 2016-12-31T21:08Z
Check the source to verify that this is the current version before use.

TABLE 5102 F-I. Minimum essential checklist for accelerated stress measurements - Continued.

Item	Category	Description	Requirement	Compliance
8	Examinations	Visual inspection	No leakage, loss of sealing capacity, damage detrimental to operation, etc. (see appendix E)	
		Ferrule end face contamination	FOVIS inspected & cleaned. Table provided summarizing cleaning steps, cleaning device, cycle used, & result. (see appendix E)	
		Ferrule end face geometry	Compliance with measurement 5201	
9	Test setup	Optical fiber connections	Routed outside chamber or to an optical interface port at chamber wall	
		Test fixture, if used	Minimize mass	
			Approved by Government tech authority	
			No other mass inside chamber	
		Cable supports	First set exiting DUT 20.32 cm (8 inch) min distance, 1.27 cm (.5 inch) max deflection	
		Items to minimize variation in test	Secure/tie down cables (no move at instr. ports)	
		Vibration measurement: accelerometer parameters	Amplitude: ±5percent from 5-2000 Hz fund resonant freq: ≥ 10 kHz Placement: vertical axis, near DUT, secure rigidly	
		Temperature measurement: Sensor parameters	Accuracy: ± 1°C Response time: ≤ 5 sec at 0°C -100°C	
		Temperature measurement: Sensor location	Within DUT, close to center. Not measure chamber air temp	
10	Test	Test processes	Compliance with Measurement 5102	
		Maintain setup during test (source end)	No disconnection allowed until after testing completed (see measurements 2102 and 2104)	
		Limits for applied stimuli part determined (if not specified as part of spec/contract)	Low temp limit: step stress	
			High temp limit: step stress	
			Temp stress test: temp cycling	
			Vibration resonance search: single axis vibration	(optional)
			Vibration only limit: multiple axes vibration	
			Accelerated stress test: multiple axes vibration with temperature cycling	
11	Calculation	Electronically calculated	Verify proper equation in program	
		Operator performed calculations	Verify correct method used and calculated properly	

Source: https://assist.dla.mil -- Downloaded: 2016-12-31T21:08Z
Check the source to verify that this is the current version before use.

TABLE 5102 F-I. Minimum essential checklist for accelerated stress measurements - Continued.

Item	Category	Description	Requirement	Compliance
12	Data sheet	Approved data sheet	Compliance with Measurement 2201	
		Added data sheet requirement	Type of vibration machine	
			Type of mounting fixtures	
			Axis for max applied Grms	
		Temperature & vibration instrumentation	Equipment information and calibration data	
13	Pass/fail criteria	Proper criteria specified	Conforms with SPEC/contract parameters & values	
		Proper criteria implemented	Test operators knows if fail & to verify result	

F.3. NOTES.

F.3.1. Intended use.

F.3.1.1 Audit team. This checklist is intended to assist Government auditors or their representatives during inspections of the optical measurement system. This checklist may be augmented at the auditor's discretion; however, it is not to be reduced.

F.3.1.2 Test laboratories. When test laboratories prepare to perform optical measurements or audits, this checklist should be used to supplement Measurement 5102, not replace it.

Source: https://assist.dla.mil -- Downloaded: 2016-12-31T21:08Z
Check the source to verify that this is the current version before use.

SUPPLEMENTAL MEASUREMENTS AND INSPECTIONS

5201-5203

Source: https://assist.dla.mil -- Downloaded: 2016-12-31T21:08Z
Check the source to verify that this is the current version before use.

END FACE GEOMETRY INSPECTION

1. Purpose. This measurement is performed when there is the requirement to inspect the FOCT (fiber optic cable topology) component or device under test (DUT) for compliance to the connector/terminus ferrule end face geometry. Measurement method addressed is one using an interferometer. This measurement is intended to be used as part of qualification testing in addition to developmental, prototype, production, rework and modification programs on military platform fiber optic cable assemblies. To ensure that the risk to the Government of accepting bad end face geometry measurement data is low, to minimize test variations and to permit more accurate comparison of test results from multiple sources, a “standardized” approach is specified to perform this measurement. Setup parameters and measurement (acceptance) criteria for ferrule end face geometry are addressed for domed end face ferrules (configured with either a physical contact, PC, an angled physical contact, APC, or a non-contact, NC, polish) and for flat end face ferrules (with a NC polish only).

2. APPLICABLE DOCUMENTS

2.1 General. The documents listed in this section are specified in sections 3, 4, and 5 of this standard practice. This section does not include documents cited in other sections of this standard practice or recommended for additional information or as examples. While every effort has been made to ensure the completeness of this list, document users are cautioned that they must meet all specified requirements of documents cited in sections 3, 4, and 5 of this standard practice, whether or not they are listed.

2.2 Government documents.

Source: https://assist.dla.mil -- Downloaded: 2016-12-31T21:08Z
Check the source to verify that this is the current version before use.

2.3 Order of precedence. Unless otherwise noted herein or in the contract, in the event of a conflict between the text of this document and the references cited herein, the text of this document takes precedence. Nothing in this document, however, supersedes applicable laws and regulations unless a specific exemption has been obtained.

3. Definitions.

3.1 General fiber optics terms. Definitions for general fiber optic terms used in this standard practice are in accordance with TIA440 "except as otherwise specified in 3.1.1 and herein". Definitions for other terms as they are used in this standard practice are given in the following paragraphs.

3.1.1 Standardization for usage of terms (spelling).
a. Fiber optic. The word "optic" appears without an "s"' when the term "fiber optic" is used as an adjective, such as "fiber optic cable", "fiber optic component". Example of a usage is "The fiber optic system is comprised of fiber optic cable with fiber optic connectors, but without any fiber optic splices."
b. Fiber optics. The word "optics" appears with an "s"' when the term "fiber optics" is used as a noun, such as " fully fiber optics". Example of a usage is "The system is comprised of both wiring media and fiber optics."
c. Multimode. The word "multimode" appears as one word as opposed to two words or two words separated by a hyphen. Example of a usage is "The cable in the system is comprised of fiber optic, multimode cable."
d. Single mode. The word "single mode" appears as two words as opposed to one word or two words separated by a hyphen. Example of a usage is "The cable in the system is comprised of fiber optic, single mode cable."

3.2 Angle physical contact polish. See 3.3.

3.3 APC polish. A PC polish (see 3.15) in which the end face surface is polished on an angle with the intent to further reduce back reflection from the mating surface.

3.4 Domed ferrule. See 3.5.

3.5 End face,domed. A ferrule in which the mating connection surface has a radius (or domed) shape (see figure 5201 A-1).

3.6 End face, ferrule. Ferrule surface contacting the mating ferrule and/or the mating fiber. Also, the surface that is perpendicular to the longitudinal axis of the optical fiber.

3.7 End face, flat. Ferrule surface contacting the mating ferrule and which the connection surface has essentially a planar (flat) shape with a very limited degree of tilt.

3.8 End face, geometry. Measurement of the ferrule end face for radius of curvature, measurement of the fiber from a defined surface for fiber height, and measurement of the highest point on the surface contour from the center of the fiber for offset.

3.9 Fiber height, domed end face. The height of the fiber is compared to the region of the sphere over the fiber that is formed by an ideally polished connector end face. The difference is the fiber height. The fiber height is measured as the degree of fiber protrusion or undercut from this region of the sphere.

3.10 Fiber height, flat end face. The height of the fiber is compared to the planar surface determined from predetermined distances on the connector end face. The difference is the fiber height. The fiber height is measured as the degree of fiber protrusion or undercut from the planar surface.

3.11 Flat ferrule. See end face, flat.

3.12 NC polish. Ferrule end face is polished in a manner so that the ferrules are the first to make contact when connection surfaces are mated together without the fibers coming into contact.

3.13 Non-contact polish. See NC polish.

Source: https://assist.dla.mil -- Downloaded: 2016-12-31T21:08Z
Check the source to verify that this is the current version before use.

3.14 Offset. The polish offset is the distance between the highest point on the connector end face (where the center of the bull's eye pattern is observed) and the center of the fiber. This offset is also referred to as the linear offset, eccentricity or apex offset.

3.15 Offset, angular. The angle formed between the following two lines. One line is a radial line from the center of the spherical surface to the high point of the polish. The other line is a line through the longitudinal axis in the center of the fiber.

3.16 PC polish. Ferrule end face is polished in a manner so that the fibers first make contact when connection surfaces are mated together.

3.17 Physical contact polish. See 3.16.

3.18 Radius of curvature, domed end face. An ideally polished connector end face should have the fiber and the connector form a uniform, spherical surface with the fiber at the highest point (apex). The radius of this sphere formed by the polished connector is called the radius of curvature.

3.19 Spherical surface. Different term but reference to the same surface as the term "domed end face". For calculation purposes, the surface is defined as a sphere. Equation developers and programmers tend to refer to the surface as the "spherical surface". Users refer to the same surface as a "domed end face" (see 3.5).

4. Parameters. Setup parameter values and limits on measurement parameters (acceptance criteria), measurement instrumentation considerations and measurement parameter interpretations are provided for domed end face ferrules (configured with either a physical contact, PC, or an angle physical contact, APC) and for flat end face ferrules (with a non-contact, NC polish only).

4.1 End face geometry configurations. There are two types of end faces for the ferrule (either domed or flat) and three types of polishes (either physical contact, PC, angle physical contact, APC, or non-contact, NC) addressed. Possible configurations, for the ferrule and polish, end face geometry, are summarized in table 5201-I. Measurement 5201.1 addresses the ferrules with four of the five end face configurations (see table 5201-I note 4/).

TABLE 5201-I. Possible Configurations for End Face Geometry.

Ferrule end face	Polish	Comments
Domed	PC	1/, 2/
Domed	NC	1/, 3/
Flat	PC	4/
Flat	NC	1/, 5/
Domed	APC	1/, 6/

1/ Configuration covered in Measurement 5201.1.
2/ Recommended for use in communications systems. Preferred for most test jumpers (MQJ).
3/ Recommended for use with test jumpers (MQJ) only.
4/ Not addressed in Measurement 5201.1. End face geometry measurements are less meaningful for the configuration of a ferrule with a flat end face containing a PC polish. No meaningful parameter limits can be established to ensure that fiber-to-fiber contact will always be obtained.
5/ Addressed, but for legacy systems only.
6/ Recommended for use in communication systems only when the optical transmitter cannot tolerate back reflection levels found with a domed end face, PC polish configuration.

4.2 Setup parameters. Setup parameters for curve fitting diameters, lighting source and lighting level shall conform to appendix A.

MEASUREMENT 5201.1

Source: https://assist.dla.mil -- Downloaded: 2016-12-31T21:08Z
Check the source to verify that this is the current version before use.

4.3 Measurement criteria. The three parameters measured for end face geometry are fiber height, radius of curvature and offset. There are different ways to determine the offset as detailed in appendix B. Recommended measurement conditions used will differ depending on the end face geometry. Measurement criteria shall conform to appendix B.

5. Implementation. Cable topologies utilizing fiber optics shall adopt these endface geometry inspection requirements and implement them in a timely and cost-effective manner. This includes obtaining cost estimates associated with the implementation on existing contracts.

5.1 Preferred end face geometry. Unless otherwise specified, the end face geometry shall conform to domed ferrules with a Physical Contact (PC) polish.

5.2 Endface geometry sampling. Inspection requirements for endface geometry utilizing an interferometer shall be 100 percent until statistical methods and process controls indicate that classical sampling methodology can be applied. Metrics shall be available to demonstrate a capable sustained process.

6. NOTES

6.1 Lessons learned.

6.1.1 Costly not to inspect initially. Failure to inspect for end face geometry as part of the post fabrication/assembly inspections can be costly. It is more costly to remove cabling and/or equipment when determined after installation that improper end face geometry cause or one factor of problem under investigation.

6.2 Intended use. On these platforms, the fiber optic cable assemblies intended to be inspected include (1) cable harnesses, (2) equipment (electronic module/package) such as a WRA, LRM or LRU with internal fiber optics, (3) circuit card modules and assemblies with internal fiber optics, (4) fiber optic test jumpers, and (5) other miscellaneous cabling.

6.3 Rationale for APC/PC polish requirement selection, single mode. These requirements were selected to ensure that the end face geometry measurement parameters are common among different ferrule diameters used in military application (specifically, ferrule diameters of 1.25, 1.58, 2.0, and 2.5 mm).

6.3.1 Undercut. Formulas in GR-326 and in IEC 61755-3-1, IEC 61755-3-2 provide same curve shape and similar values at each radius of curvature for the IEC formula calculated with an apex offset of 50 micrometers (µm). The IEC formula for a 2.5 mm diameter ferrule provides slightly less conservative (larger) values than GR-326. The IEC formula for a 1.25 mm diameter ferrule provides slightly more conservative (smaller) values than GR-326. When the limit of 50 µm is imposed for the apex offset, then GR-326 criteria fall between those of IEC 61755-3-1, IEC 61755-3-2 criteria for the 1.25 and 2.5 mm diameter ferrules. For commonality with industry, the table for the undercut limits has been revised to specify the IEC 61755-3-1, IEC 61755-3-2 criteria for the 1.25, 1.58, 2.0 and 2.5 mm diameter ferrules. For the domed end face with a PC polish the requirement for a maximum apex offset of 50 µm is retained versus citing the IEC requirement of 70 um.

6.3.2 Apex offset. GR-326 specifies a maximum limit for the apex offset of 50 µm, whereas, IEC 61755-3-1, IEC 61755-3 -2 limit is 70 µm. Current and former military polishing procedures (such as in MIL-STD-2042) for domed ferrule end faces with a PC polish have been developed to date using 50 µm as the limit for the apex offset. As a result, 50 um will continue to be specified for this limit when used with a PC polish. For the APC polish, the additional variable to the apex offset accounting for the polishing angle must be included. An apex offset of 70 microns is specified.

6.3.3 Development of APC polishing processes. Polishing processes are developed using IEC 61755-3-1, IEC 61755-2 criteria (with a limit for the apex offset of 70 µm). Table 1 is used for all ferrule diameters (specifically, the 1.25 mm 1.58, 2.0 and 2.5 mm diameter). This selection is made due to table 1 providing for larger contact force over that of table 2.

MEASUREMENT 5201.1

Source: https://assist.dla.mil -- Downloaded: 2016-12-31T21:08Z
Check the source to verify that this is the current version before use.

6.3.4 Acceptance criteria for end face geometry, domed end face with PC polish for single mode fiber. Acceptance criteria for undercut are to use table 1 of IEC 61755-3-1 for the 1.25, 1.58, 2.0 and 2.5 mm diameter ferrule sizes.

6.3.5 Acceptance criteria for end face geometry, domed end face with APC polish for single mode fiber. Acceptance criteria for undercut are to use table 1 of IEC 61755-3-2 criteria (with a limit for the apex offset of 70 µm) for the 1.25 mm, 1.58, 2.0 mm and 2.5 mm diameter ferrule sizes.

6.4 Rationale for APC/PC polish requirement selection, multimode. Industry recognizes that the end face geometry requirements for a polish with multimode fiber are different than that for single mode. To date, these requirements have not been defined. The end face geometry requirements for multimode fiber selected are to be used until industry standards are developed. Once developed, these standards will be tailored for suitability to different ferrule diameters (specifically, ferrule diameters of 1.25, 1.58, 2.0, and 2.5 mm), surface contact forces, etc. used in military applications.

MEASUREMENT 5201.1

Source: https://assist.dla.mil -- Downloaded: 2016-12-31T21:08Z
Check the source to verify that this is the current version before use.

APPENDIX A

SETUP PARAMETERS FOR END FACE GEOMETRY MEASUREMENT

A.1 Purpose. This appendix provides the values for parameters required to setup the interferometer prior to obtaining measurements for the DUT ferrule end face geometry. .

A.2 APPLICABLE DOCUMENTS.

A.2.1 General. The documents listed in this section are specified in sections 3, 4, and 5 of this standard practice. This section does not include documents cited in other sections of this standard practice or recommended for additional information or as examples. While every effort has been made to ensure the completeness of this list, document users are cautioned that they must meet all specified requirements of documents cited in sections 3, 4, and 5 of this standard practice, whether or not they are listed.

A.2.2 Government documents.

A.2.2.1 Non-Government publications. The following document forms a part of this document to the extent specified herein. Unless otherwise specified, the issues of these documents are those cited in the solicitation or contract.

INTERNATIONAL ELECTROTECHNICAL COMMISSION (IEC)

IEC 61300-3-47 - Fibre Optic Interconnecting Devices and Passive Components-Basic Test and Measurement Procedures – Part 3-47: Examinations and Measurements- End Face Geometry of PC/APC Spherically Polished Ferrules Using Interferometry

IEC 61755-3-1 - Fibre Optic Connector Optical Interfaces - Part 3-1: Optical Interface, 2,5 mm and 1,25 mm Diameter Cylindrical Full Zirconia Pc Ferrule, Single Mode Fibre.

IEC 61755-3-2 - Fibre Optic Connector Optical Interfaces - Part 3-2: Optical Interface, 2,5 mm and 1,25 mm Diameter Cylindrical Full Zirconia Ferrules For 8 Degrees Angled-PC Single Mode Fibres.

(Copies are available from http://webstore.iec.ch/webstore/webstore.nsf/$$search?openform or ANSI Customers Service, 25 West 4th Street, 4th Floor, New York, NY 10036.)

A.2.3 Order of precedence. Unless otherwise noted herein or in the contract, in the event of a conflict between the text of this document and the references cited herein, the text of this document takes precedence. Nothing in this document, however, supersedes applicable laws and regulations unless a specific exemption has been obtained.

A.3 Curve fitting parameters. Measurements shall be obtained with the interferometers setup using the curve fitting diameters specified in table 5201 A-I. The curve fitting dimensions are those specified in A.3.1 through A.3.3.

A.3.1 Diameter F. The outside diameter of the averaging area, an area of a circle that is centered on the fiber surface. The center of the fiber is considered to be concentric with the center of the ferrule (see table 5201 A-I).

A.3.2 Diameter E. The outside diameter of the extracting area, an area of a circle that includes the fiber end face and the adhesive region around the ferrule hole diameter.

Source: https://assist.dla.mil -- Downloaded: 2016-12-31T21:08Z
Check the source to verify that this is the current version before use.

A.3.3 Diameter D. The outer diameter of the fitting area, an area centered on the ferrule surface and defined by a donut shaped area with outer diameter D and inside diameter E. The outer diameter of the fitting area is also referred to as the region of interest width.

TABLE 5201 A-I. Standardized diameters for the curve fitting areas.

Diameter (microns)	Cladding		Polyimide coating
	125 1/	140	100/140/172
Diameter F – averaging area OD 2/	50	50	50
Diameter E – extracting area OD 3/	140	155	185
Diameter D – fitting area OD 4/	250	270	300

1/ IEC 61300-3-47 lists the "suggested" diameters for D, E & F for the 125 micron, nominal fiber diameter and an ROC of 8 to 25 mm. Other size fiber diameters D, E & F are proportional based on these values as indicated in the following notes.
2/ Diameter F is not increased for larger fiber sizes since fiber height is calculated at the center of the fiber and is not the average height of the total fiber. A 50 micron diameter provides a more robust measurement for the center of the fiber (more pixels).
3/ Use an outer diameter that is 15 microns greater than the cladding diameter or coating diameter, as applicable.
4/ Use an outer diameter that is about 110 microns above the extraction diameter.

A.4 Interferometer light source selection. Measurements can be obtained using either a broad band or a narrow band measurement and the fiber height calculated based on the domed end face (spherical surface, see 3.18) or the planar surface. For the ferrule with an end face geometry addressed in Measurement 5201, the measurement conditions shall conform to A.4.1, A.4.2 and table 5201 A-II.

A.4.1 Narrow band (monochromatic light). In general, use for connectors with a PC polish. Use where there will be less dispersion from the end face, such as with a "sharper" radius of curvature (smaller value). Monochromatic light (such as red light) provides a measurement with better resolution.

A.4.2 Broad band (white light). In general, use for connectors with a non-contact polish. Use to eliminate ambiguity for a configuration with a step height. White light provides a coarser measurement.

TABLE 5201 A-II. Measurement conditions for end face geometry addressed.

Configurations for end face geometry		Measurement conditions	
Ferrule end face	Polish	Measurement type	Calculated fiber height
Domed	PC	Narrow band	From spherical surface
Domed	NC	Broad band	From spherical surface
Flat	NC	Broad band	From planar surface
Domed	APC	Narrow band	From spherical surface

A.5 Surface reflectivity. Adjust lighting level (such as camera gain, image and contrast) to prevent light saturation of the detector/camera.

A.5.1 Ceramic surface. Adjust for a lower reflectivity.

A.5.2 Metal ferrule with ceramic (jeweled) insert. Adjust for a lower reflectivity (similar reflectance level as for ceramic ferrule since region being detected is within the ceramic insert).

A.5.3 Metal ferrule. Adjust for a higher reflectivity.

Source: https://assist.dla.mil -- Downloaded: 2016-12-31T21:08Z
Check the source to verify that this is the current version before use.

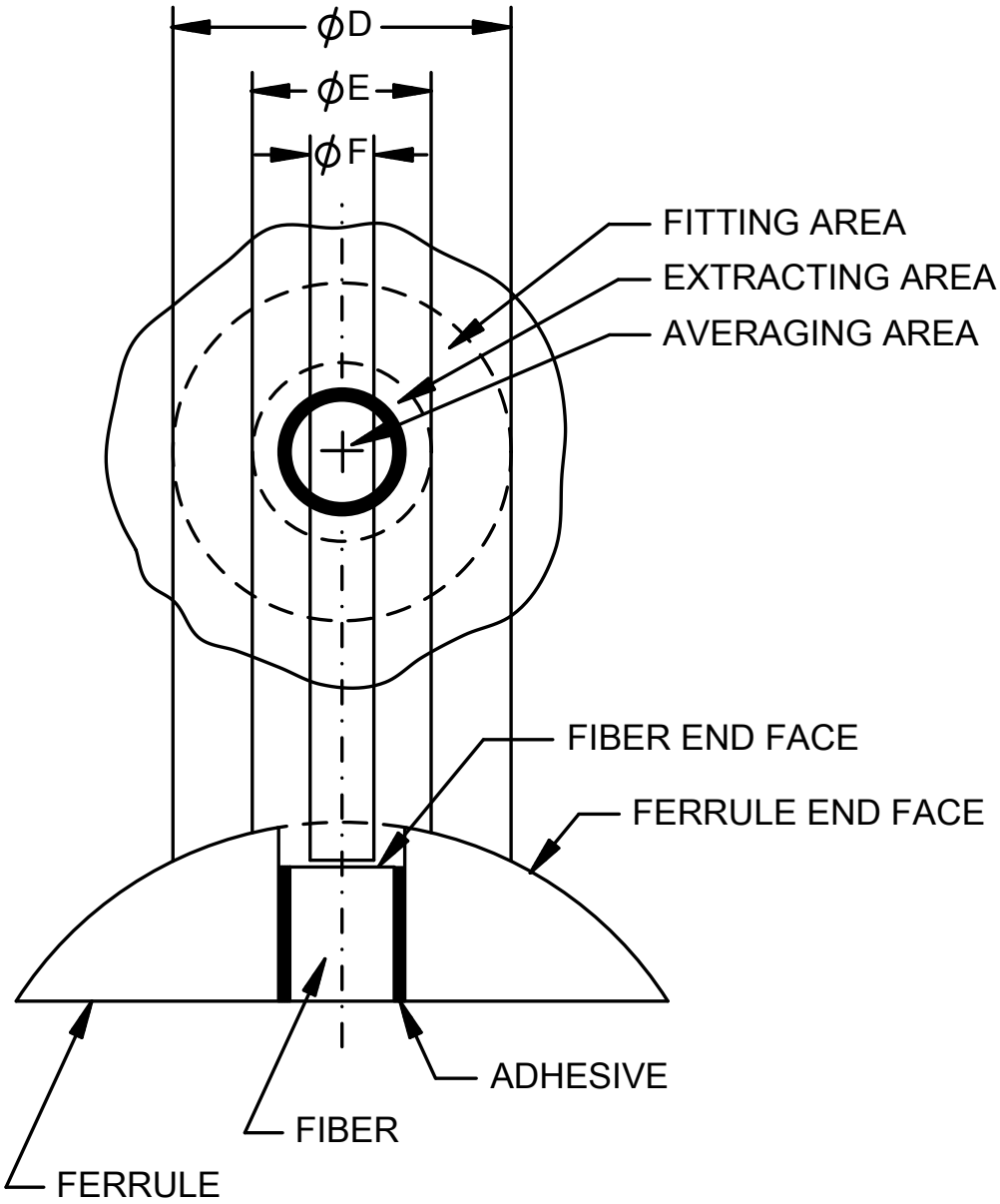

FIGURE 5201 A-1. Curve fitting diameters.

Source: https://assist.dla.mil -- Downloaded: 2016-12-31T21:08Z
Check the source to verify that this is the current version before use.

APPENDIX B

MEASUREMENT CRITERIA FOR END FACE GEOMETRY MEASUREMENT

B.1 Purpose. This appendix provides the acceptance criteria for parameters generated by the interferometer software for calculated measurements of radius of curvature, apex offset and fiber height for the DUT ferrule end face geometry.

B.2 Relationship of fiber height to surface of ferrule.

B.2.1 Spherical surface. Protrusion (i.e., spherical protrusion) is the positive distance above the spherical surface. Undercut (i.e., spherical undercut) is positive distance below the domed end face (spherical surface, see 3.18). Only a partial region of the spherical surface is used for the fiber height measurement. This region is limited to the portion of the surface directly over the fiber.

B.2.2 Planar surface. The planar surface is to be determined from an ideal sphere after mapping the ferrule end face. From this best fit/ideal sphere, a plane shall be mapped using the points on the ideal sphere at diameter E, the outer diameter of the extraction area (see curve fitting areas for interferometer measurement calculations in appendix A of Measurement 5201.1).

B.3 Polarity (+ or -) for fiber height measurements. Interferometers traditionally provided the extended/ protracted fiber measurement in terms of fiber height. With respect to the distance above the spherical surface, a particular interferometer may provide the fiber height as either a positive or negative value. Refer to the operating manual for the particular interferometer. Some recent interferometers provide the extended/protracted fiber measurement either in terms of protrusion or in terms of undercut.

B.3.1 Spherical surface, negative sign for protrusion. If the interferometer provides either a measurement of fiber height with a positive distance below the spherical surface or of undercut, use the applicable undercut value in the table as the upper/positive limit. Use the value for protrusion as the lower/negative limit (for example, a 0.05 micron protrusion, as the lower limit, would be specified as -0.05 microns).

B.3.2 Spherical surface, positive sign for protrusion. If the interferometer provides either a measurement of fiber height with a positive distance above the spherical surface or of protrusion, use the applicable undercut value in the table as the lower/negative limit. Use the value for protrusion as the upper/positive limit (for example, a 0.05 micron protrusion, as the upper limit, would be specified as +0.05 microns).

B.3.3 Planar surface. Replace the words “spherical surface” with “planar surface” in B.3.1 and B.3.2 and the polarity for the fiber height applies to a measurement calculated based on a planar surface.

B.4 Radius of curvature (ROC). Acceptable limits for ROC shall conform to table 5201 B-I.

TABLE 5201 B-I. Acceptable limits for radius of curvature (ROC).

Surface	Acceptable ROC
Spherical, PC polish	7 mm to 25 mm
Planar	$\leq$ -80 mm and $\geq$ + 80 mm 1/
Spherical, APC polish	5 mm to 12 mm

1/ Inspect to ensure consistency of a flat surface contour rather than specifying stringent pass/fail criteria. The criteria provided are to ensure there is not an overly concave or overly convex surface contour (i.e., not have a sharp/steep radius of curvature (ROC)).

Source: https://assist.dla.mil -- Downloaded: 2016-12-31T21:08Z
Check the source to verify that this is the current version before use.

B.4.1.1. Positive ROC. Positive radius of curvature is convex to a flat ferrule end face. A flat/gradual convex radius of curvature is considered to be from +80 to positive infinity.

B.4.1.2 Negative ROC. Negative radius of curvature is concave to a flat ferrule end face. A flat/gradual concave radius of curvature is considered to be from –80 to $-\infty$.

B.4.2 Specific relationships of radius of curvature for planar surfaces.

B.4.2.1 Convex to concave. As the radius of curvature goes from a gradual convex contour to a gradual concave contour, the values go from + 80 mm up to positive infinity, inverts from positive infinity to negative infinity, then goes down from $-\infty$ to – 80 mm.

B.4.2.2 Close to flat surface. Note: The radius of curvature of a close to flat surface may change readily from one measurement to the next from a large positive value (such as + 20,000 mm) to a large negative value (such as -20,000 mm).

B.5 Offset. Acceptable limits for offset shall conform to table 5201 B-II.

TABLE 5201 B-II. Acceptable limits for offset.

Surface	Type offset	Acceptable offset
Spherical, PC polish	Apex	≤ 50 microns
Planar	Angular	≤ 0.5 degrees 1/
Spherical, APC polish	Apex	≤ 70 microns

1/ Inspect to ensure consistency of a near perpendicular surface rather than specifying stringent pass/fail criteria. The criteria provided are to ensure there is not an overly steep angle on the surface contour.

B.6 Fiber height. Acceptable limits for fiber height shall conform to table 5201 B-III.

TABLE 5201 B-III. Acceptable limits for fiber height.

Surface	Acceptable protrusion	Acceptable undercut
Spherical, PC polish	≤ 0.05 microns (≤ 50 nm)	See table 5201 B-IV
Planar 1/	None	65 nm minimum 400 nm maximum
Spherical, APC polish	≤ 0.1 microns (≤ 100 nm)	See table 5201 B-IV

1/ Fiber height for a ferrule with a flat end face shall be measured from a planar surface as opposed to the apex of a spherical surface.

B.7 Fiber undercut for a spherical surface. Acceptable limits for fiber undercut for a domed end face with either a PC polish or with an APC polish with single mode fiber shall conform to table 5201 B-IV. Acceptable limits for fiber undercut for a domed end face with an APC polish for multimode fiber shall conform to table 5201 B-IV. Acceptable limits for fiber undercut for a domed end face with a PC polish for multimode fiber shall conform to table 5201 B-V.

Source: https://assist.dla.mil -- Downloaded: 2016-12-31T21:08Z
Check the source to verify that this is the current version before use.

TABLE 5201 B-IV. Acceptable limits for undercut.

Type polish	Type fiber	Maximum acceptable limit for undercut (nanometers) 1/,2/, 3/, 4/
PC	SM	$U = (1988 \times R^{-0.795}) - (R \times 10^6) + (R^2 \times 10^6 \times O^2)^{.5} \times 10^3 - 60$
PC	MM	See table 5201 B-V
APC	SM	$U = (1988 \times R^{-0.795}) - (R \times 10^6) + (R^2 \times 10^6 \times O^2)^{.5} \times 10^3 - 60$
APC	MM	$U = (-0.0076 \times R^3) + (0.567 \times R^2) – (15.603 \times R) + 170.33$

1/ Abbreviations: SM = single mode, MM = multimode, U = maximum undercut, R = radius of curvature, O = apex offset.
2/ Formulas provided are applicable and common to 1.25, 1.58, 2.0 and 2.5 mm diameter ferrule sizes for MIL-PRF-29504 termini and MIL-DTL-83522/16 connectors.
3/ Single mode formula specified for domed end face with both PC and APC polish is based on 2006 version of IEC 61755-3 documentation.
4/ Formula for a domed end face and PC polish with multimode fiber is valid for an end face geometry with an apex offset of 50 microns or less, a maximum protrusion of 100 nanometers, and a radius of curvature between 5 to 30 mm.

Source: https://assist.dla.mil -- Downloaded: 2016-12-31T21:08Z
Check the source to verify that this is the current version before use.

TABLE 5201 B-V. Acceptable limits for undercut, PC polish, with multimode fiber.

End face	Domed 1/	Domed 2/,3/	Domed 2/,3/	Domed 2/,3/
Ferrule hole	N/A	125 µm	140 µm	172 µm
ROC (mm)	PC polish (nm)	NC polish (nm)	NC polish (nm)	NC polish (nm)
7	125	329	400	578
8	125	294	356	512
9	125	267	322	461
10	125	245	295	420
11	115	228	273	386
12	106	213	254	358
13	98	200	238	334
14	91	190	225	314
15	85	180	213	297
16	80	172	203	281
17	75	165	194	268
18	72	159	186	255
19	68	153	179	245
20	65	148	173	235
21	62	143	167	226
22	59	139	161	218
23	56	135	157	211
24	53	131	152	204
25	50	128	148	198

1/ Domed end face with PC polish. The maximum value (limit) for the spherical undercut is dependent upon the radius of curvature measured for the connector under test. Current commercial equation is as follows: U = -0.02R3 + 1.3R2 - 31R + 325, where U is the maximum acceptable undercut in nanometers and R is the radius of curvature in mm. This equation is used for a radius of curvature between 10 to 25 mm. A constant value for the maximum acceptable undercut of 125 nm is used with a radius of curvature between 7 to 10 nm. This table lists the maximum acceptable undercut for every mm of the radius of curvature (ROC).

2/ Domed end face with NC polish. The minimum value (limit) for the spherical undercut for ferrules with a NC polish is dependent upon the radius of curvature measured and on the ferrule hole diameter for the connector/terminus under test. This table lists the maximum acceptable undercut for every mm of the radius of curvature (ROC).

3/ Rationale for note 2. These minimum acceptable undercut values versus the radius of curvature for ferrules with a NC polish are based on a fiber height of 50 nm below the surface of the ferrule. Calculations for the tables are based on a geometric approach utilizing the Pythagorean Theorem.

Source: https://assist.dla.mil -- Downloaded: 2016-12-31T21:08Z
Check the source to verify that this is the current version before use.

FERRULE END FACE VISUAL INSPECTION

1. Purpose. This inspection establishes visual inspection criteria for ferrule end face conditions (such as for any contamination or damage) versus ferrule end face geometry (as addressed in Measurement 5202) to be used when viewed with a compliant Fiber Optic Video Inspection System (FOVIS). This inspection pertains to ferrules on both fiber optic termini and single ferrule connectors. This inspection is intended for visual inspections at beginning-of-life (including developmental, prototype, production), after maintenance and after repair (including rework and modification programs) on military platform fiber optic cable assemblies (including those interfaces on cable harnesses and those on the exterior of equipment modules). This inspection is for platforms and systems in which the ferrule end face must be returned to beginning of life inspection criteria after depot/intermediate level maintenance and after both operational level and depot/intermediate level repair. Measurement 5202 is used for Navy shipboard and other specified applications (see 6.2).

2. APPLICABLE DOCUMENTS

2.1 General. The documents listed in this section are specified in sections 3, 4, and 5 of this standard practice. This section does not include documents cited in other sections of this standard practice or recommended for additional information or as examples. While every effort has been made to ensure the completeness of this list, document users are cautioned that they must meet all specified requirements documents cited in sections 3, 4, and 5 of this standard practice, whether or not they are listed.

2.2 Government documents.

2.2.1 Specifications, standards and handbooks. The following specifications, standards and handbooks form a part of this document to the extent specified herein. Unless otherwise specified, the issues of these documents are those cited in the solicitation or contract.

DEPARTMENT OF DEFENSE STANDARD

MIL-STD-2042	Fiber Optic Topology Installation Standard Methods for Naval Ships

(Copies of these documents are available online at http://quicksearch.dla.mil/ or from the Standardization Document Order Desk, 700 Robbins Avenue, Building 4D, Philadelphia, PA 19111-5094.)

DEPARTMENT OF DEFENSE PUBLICATION

NAVAIR 01-1A-505-4/ T.O. 1-1A-14-4/ TM 1-1500-323-24-4	Installation and Testing Practices Aircraft Fiber Optic Cabling.

(A copy of this document is available online at: https://mynatec.navair.navy.mil. NATEC has three difference processes to obtain the manual, depending on if you are Government personnel (military and civilians), Contractors with a Government contract, or everyone else. If unable to access this Web Site or require further assistance, contact (1) NATEC Customer Service: 619.545.1888, (2) NATEC Website Status Hotline: 619.545.1706, or (3) NATEC Customer Service E-mail: nani_customerservice@navy.mil.)

2.3 Order of precedence. Unless otherwise noted herein or in the contract, in the event of a conflict between the text of this document and the references cited herein, the text of this document takes precedence. Nothing in this document, however, supersedes applicable laws and regulations unless specific exemption has been obtained.

3. DEFINITIONS (see 6.3).

3.1 Backlit (back lighting) inspection. The ferrule end face is observed visually (on a monitor) while the other end of the optical fiber is illuminated with a white (visible) light source (such as a small flashlight). This illumination enables identification of the core size (visibility of the core) and distinguishes any subsurface cracks from other defects.

Source: https://assist.dla.mil -- Downloaded: 2016-12-31T21:08Z
Check the source to verify that this is the current version before use.

3.2 Beginning of life. This refers to when a fiber optic terminus is first put into service. Also, this applies to when a platform or equipment, such as an avionics box, is first acquired.

3.3 Cable assembly, single segment (fiber optic). Single fiber assemblies consist of cabling with connectors on each end. Different configurations for this cable assembly may be multiple termini connector cable assemblies (such as plug-to-plug or plug-to-receptacle configurations) and multiple termini plug/receptacle-to-single fiber connector assemblies.

3.4 Cable assembly, multiple segment (fiber optic). Two or more single segment cable assemblies mated together at the fiber optic connectors.

3.5 Cable assembly (fiber optic). One segment or an assembly constructed from a fiber optic cable with connectors on each end.

3.6 Catastrophic damage. An unacceptable defect found in the glass or optical fiber, which can result in a failure under stress or inability to see a reasonable image of a polished end face. Failure occurs when there is no transmission or a considerable loss of light through the optical fiber. Stress may be induced by environmental factors such as temperature, vibration or shock. Catastrophic damage at the surface (on the end face) is identified as cracks, hackle and shattering or the inability to see a reasonable image. Catastrophic damage below the surface (subsurface) is identified as cracks.

3.7 Contamination. The existence of particulates and/or fluids on the surface of a ferrule end face.

3.8 Crack. Defect being, typically linear, that is of very narrow width relative to length and that is of considerable depth. Crack may be on the surface or internal to the material. A crack presents a potential risk to the structural integrity of the material.

3.9 Damage. Any end face fault or imperfection in the optical fiber. Damage can be the result of the cleaving, curing and polishing processes during fabrication/termination and as a result of mechanical (such as mating, impact) and environmental (such as temperature, vibration) induced stresses. Damage includes scratches, cracks, pits, chips, embedded debris, hackle and shattered area.

3.10 Defects. Damage, other than a scratch, and contamination, not able to be removed by cleaning that is on a magnified ferrule end face observed under direct lighting.

3.11 Defects, backlit. Damage that is on a magnified ferrule end face observed under back lighting. This damage includes cracks in the interior of the optical fiber (see 3.1).

3.12 Depot level maintenance and repair. A depot level action (maintenance or repair) is one performed at a facility other than on-site. The depot level facilities include that of an intermediate maintenance facility (potentially where used) as well as off-site entities such as the factory and cable assembly fabrication houses.

3.13 End face, ferrule. Surface that makes contact with the mating ferrule. Ferrule end face is the surface perpendicular to the optical fiber longitudinal axis. The ferrule end face with an APC polish is at an 80 angle for the surface perpendicular to the optical fiber longitudinal axis.

3.14 Fluids. Liquids or other low flow resistant materials that deposit thin layer films (contaminant) on the ferrule end face. The fluid type contaminants include oils, solvents, coolants, lubricants and their dried residues.

Source: https://assist.dla.mil -- Downloaded: 2016-12-31T21:08Z
Check the source to verify that this is the current version before use.

3.15 FOVIS − Fiber Optic Video Inspection System. The FOVIS can display a magnified view of the optical fiber on the ferrule end face of a connector or terminus. Different adapters are provided to facilitate use with different ferrule diameters, for termini within a multiple termini connector and for connectors behind various bulkhead adapters. This system consists of a probe (camera with probe tip), display (that may include a computer with automated capture and analysis software) and interconnecting cabling. Single or dual magnification allows for general or fiber inspection or both. General inspection (at a lower magnification and sometimes “generically” referred to as 200X) is used to view the end face for cleanliness. A larger area of the ferrule is displayed (larger field of view) with the resulting smaller image size. Fiber inspection (at a higher magnification and sometimes “generically” referred to as 400X) is used to view the end face for fiber imperfections. A smaller area of the ferrule is displayed (smaller field of view) with the resulting larger image size.

3.16 Hackle. A fracture in the optical fiber with roughly cut, jagged edges on the surface of the optical fiber end face.

3.17 Magnification, 400X, optical. Intent is to cite a magnification value based on requirements for detection, field of view and fiber image and approximately equivalent to the magnification of a 400X optical microscope. This magnification term is intended more for legacy reference and the term “Polish Quality Inspection” is preferred and used to cite performance limits (see table 5203-I in MIL-STD-1678-5 Measurement 5203) to be met for the intended application .

3.18 Magnification, 200X, optical. Intent is to cite a magnification value based on requirements for detection, field of view and fiber image size and approximately equivalent to the magnification of a 200X optical microscope. This magnification term is intended more for legacy reference. The term “General Inspection” is preferred and used to cite performance limits (see table 5203-I in MIL-STD-1678-5 Measurement 5203) to be met for the intended application.

3.19 Microscope, optical. Inspection device in which an image is focused, magnified and directed to observer's eye through optical lenses.

3.20 Microscope, video. See FOVIS.

3.21 Operational level maintenance, repairs. The operational level is defined as maintenance done on site, in the field, wherever the platform is located typically performed by field/fleet maintainers.

3.22 Scratches. Linear or curvilinear defect found on the surface that is of shallow depth, very narrow width, and relatively long length. No risk assessed as to compromising the structural integrity of the material.

3.23 Particulates. Trace or minuscule amounts of specks or solid debris that is sufficient in size to be visible under magnification. Particulates can include dirt, dust, shavings from vibration/chaffing of parts and other debris.

4. General requirements. Ferrule end face inspection shall include those at beginning-of-life (including developmental, prototype, production, and replacement), after maintenance and after repair (including rework and modification programs), on military platform fiber optic cable assemblies (including those interfaces on cable harnesses and those on the exterior of equipment modules). Inspection criteria for maintenance differs dependent upon if the action occurs at the depot/intermediate or at operational level. A graphical representation of the ferrule end face for operational level maintenance with maximum allowed defect coverage and scratch width, single mode fiber size, 50/125 micron fiber size, 62.5/125 micron fiber size, and 100/140/172 micron fiber size with polyimide coating is shown in figure 5202-1, figure 5202-2, figure 5202-3, and figure 5202-4, respectively.

MEASUREMENT 5202

Source: https://assist.dla.mil -- Downloaded: 2016-12-31T21:08Z
Check the source to verify that this is the current version before use.

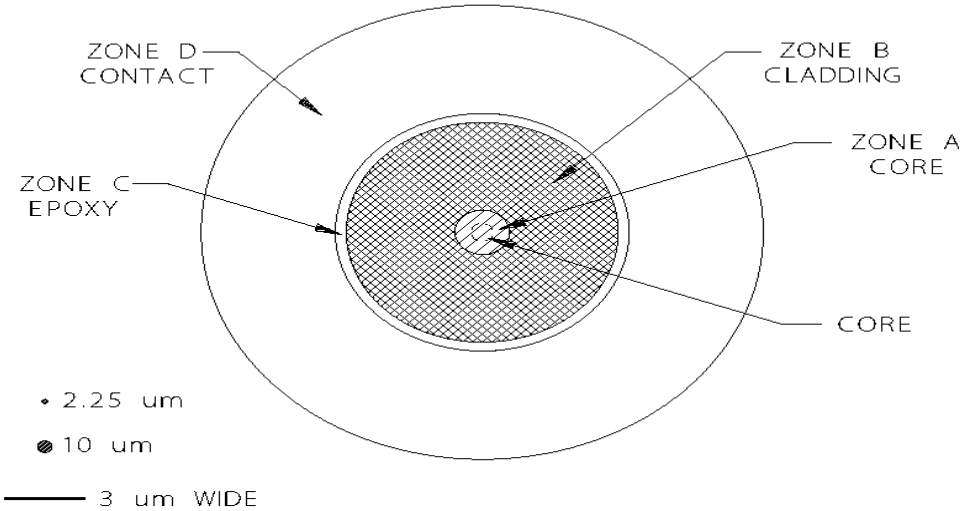

FIGURE 5202-1. Inspection zones for single mode fiber with diameters/width as acceptance criteria (operational level maintenance).

Source: https://assist.dla.mil -- Downloaded: 2016-12-31T21:08Z
Check the source to verify that this is the current version before use.

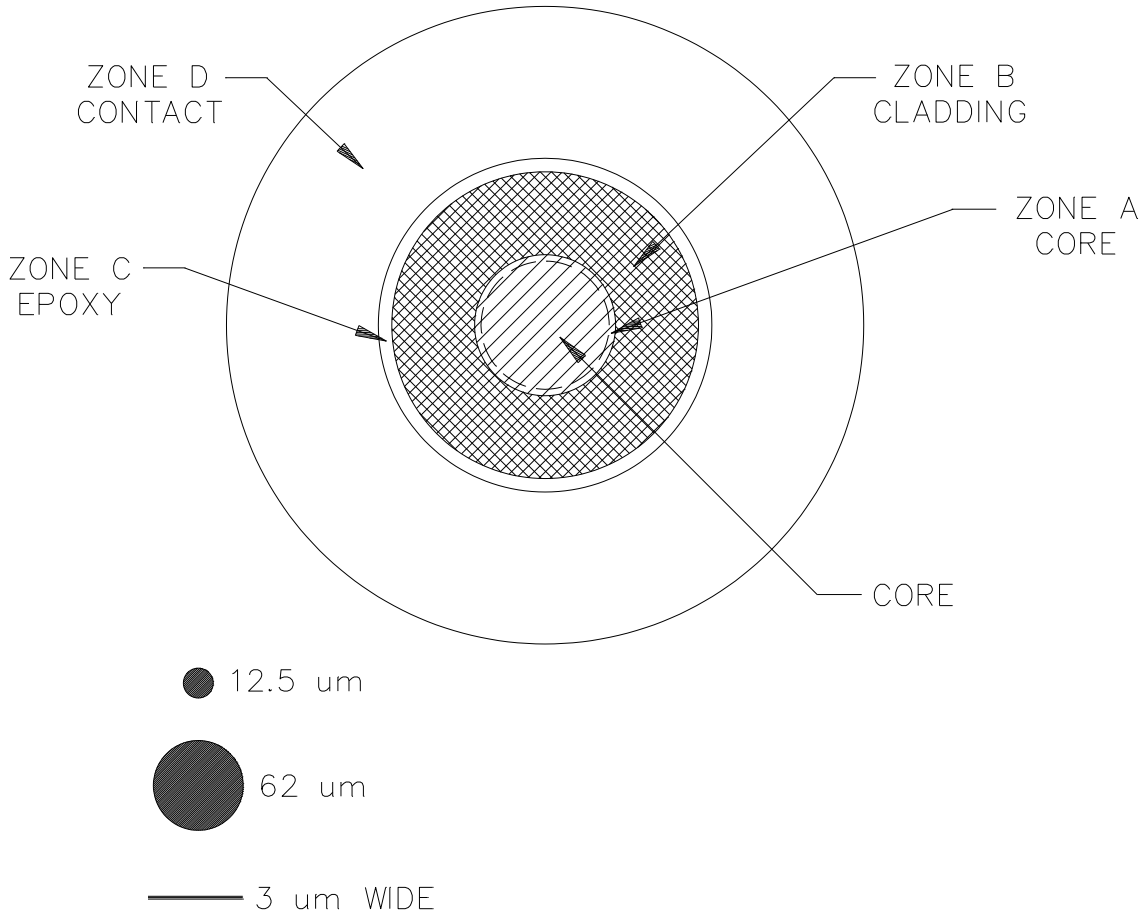

FIGURE 5202-2. Inspection zones for 50/125 micron fiber with diameters/width as acceptance criteria (operational level maintenance).

Source: https://assist.dla.mil -- Downloaded: 2016-12-31T21:08Z
Check the source to verify that this is the current version before use.

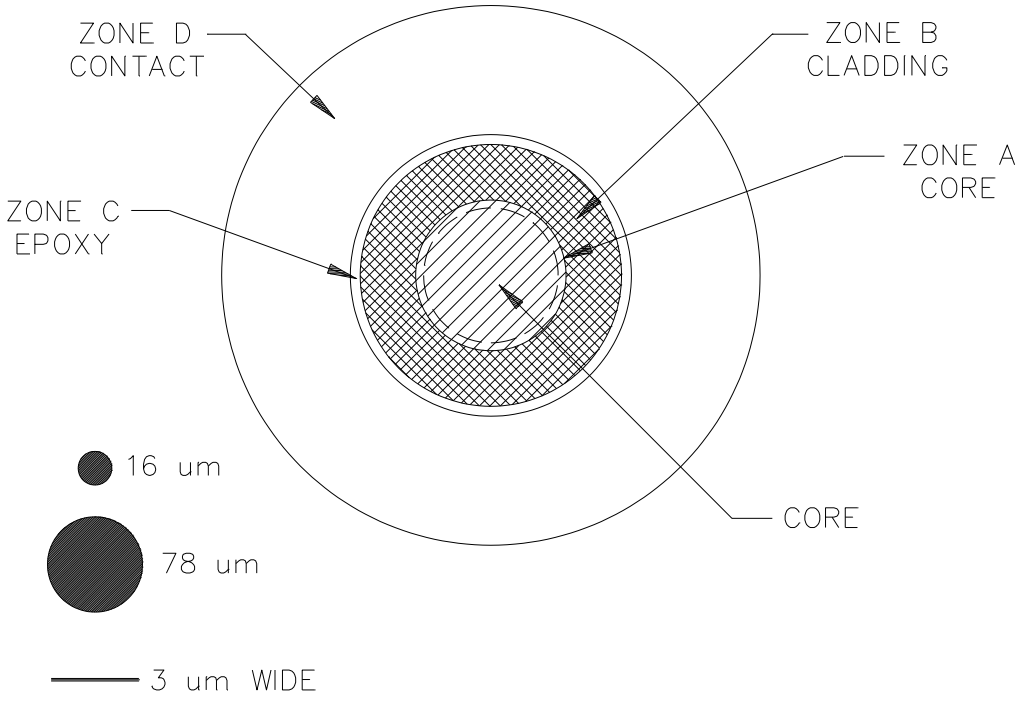

FIGURE 5202-3. Inspection zones for 62.5/125 micron fiber with diameters/width as acceptance criteria (operational level maintenance).

Source: https://assist.dla.mil -- Downloaded: 2016-12-31T21:08Z
Check the source to verify that this is the current version before use.

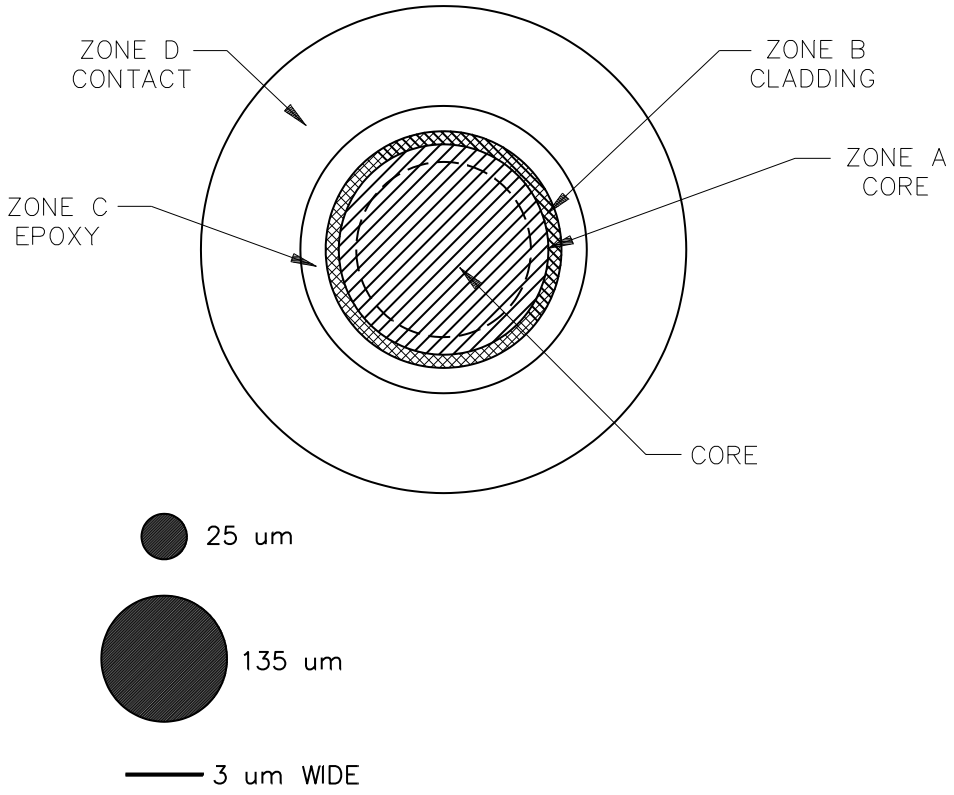

FIGURE 5202-4. Inspection zones for 100/140 fiber with diameters/width as acceptance criteria (operational level maintenance).

Source: https://assist.dla.mil -- Downloaded: 2016-12-31T21:08Z
Check the source to verify that this is the current version before use.

TABLE 5202-I. End face visual inspection acceptance criteria, except operational level maintenance. (for beginning of life, operational level repair, depot/intermediate level maintenance and repair) 1/, 5/, 7/.

Zone letter	Zone name	Allowed defects at beginning-of-life	Allowed scratches at beginning-of-life
A 6/	Core	None	None
B 6/	Cladding	None	None
C	Epoxy	2/	No Limit
D	Contact	None 4/	10 percent of zone D 3/,4/

1/ Inspections are based on the use of a FOVIS with the specified optical microscope equivalent magnification (see 5.1.1).
2/ Epoxy zone width is insufficient to specify criteria.
3/ Less than 10 percent of contact zone area allowed for new field fabrications with ceramic ferrules.
4/ No limits apply to this inspection criterion for a metal ferrule, a plastic ferrule, and a metal ferrule with a ruby jeweled insert.
5/ See 5.2 for additional allowance granted when using automated capture and analysis software.
6/ It is recognized that the visual inspection acceptance criteria for the core and for the cladding zones are the same. To maintain consistency with industry standards, separate zones are listed for the core and cladding.
7/ See 3.2.

TABLE 5202-II. End face visual inspection acceptance criteria, operational level maintenance. 1/, 8/

Zone letter	Zone name	Allowed defects operational level maintenance	Allowed scratches operational level maintenance
A	Core	< 5 percent of core area 2/	None
B	Cladding	< 5 percent of core area 3/	None > 3 micron width, 5 or less ≤ 3 micron width 9/
C	Epoxy	4/	No limit
D	Contact	< 125 percent of core area 3/, 5/	10 percent of zone D 6/, 7/

1/ Inspections are based on the use of a FOVIS with the specified optical microscope equivalent magnification (see 5.1.1).
2/ Defects found in the core zone must total less than 5 percent of the core area to pass inspection (see note 10/). For the single mode fiber sizes with a nominal mode field of 9 microns, use a maximum allowable diameter of 10 (instead of 25) microns to calculate the core area. Likewise for the single mode fiber sizes with a mode field with a nominal of 5 microns, use a maximum allowable diameter of 7 microns to calculate the core area.
3/ The amount of defects found in the core and cladding zones collectively also must be less than 5 percent of the core area (see note 10/).
4/ Epoxy zone width is insufficient to specify criteria.
5/ Defects found in the core, cladding, epoxy and contact zones collectively also must total less than 125 percent of the core area. For the single mode fiber, use a maximum allowable diameter of 9 (instead of 25) microns to calculate the core area.
6/ Less than 10 percent of contact zone area allowed with ceramic ferrules.
7/ No limits apply to this inspection criterion for a metal ferrule, a plastic ferrule, and a metal ferrule with a ruby jeweled insert.
8/ See 5.2 for additional allowance granted when using automated capture and analysis software.
9/ Scratch with less than a 3 micron width allowed within cladding zone as long as does not extend into the core zone.
10/ It is recognized that the visual inspection acceptance criteria for the core and for the cladding zones are the same. To maintain consistency with industry standards, separate zones are listed for the core and cladding.

MEASUREMENT 5202

Source: https://assist.dla.mil -- Downloaded: 2016-12-31T21:08Z
Check the source to verify that this is the current version before use.

TABLE 5202-III. Maximum allowed defect diameters (based on defect area) in microns, operational level maintenance. 1/, 6/

Fiber type/size	Core zone 1/, 5/		Cladding zone 1/		Contact zone 2/	
	Diameter range	Max defect diameter	Diameter range 4/	Max defect diameter	Diameter range	Max defect diameter
Single mode	0 to 25	2.25	25 to 120	2.25	130 to 250	10
50/125 micron	0 to 55	12.5	55 to 120	12.5	130 to 250	62
62.5/125 micron	0 to 70	16	70 to 120	16	130 to 250	78
100/140 micron 3/	0 to 120	25	120 to 135	25	165 to 280	135

1/ Maximum allowed defect coverage area is based on 5 percent of the core area. For the single mode fiber sizes with a nominal mode field of 9 microns, use a maximum allowable diameter of 10 (instead of 25) microns to calculate the core area. Likewise for the single mode fiber sizes with a nominal mode field of 5 microns, use a maximum allowable diameter of 7 microns to calculate the core area.
2/ Maximum allowed defect coverage area is based on 125 percent of core area. For the single mode fiber, use a maximum allowable diameter of 9 (instead of 25) microns to calculate the core area.
3/ Specified for fiber with polyimide coating.
4/ Inspection encompass maximum allowed coverage area of defect for both core and cladding, but diameter range is given for cladding only. See second column to left in table for core diameter range.
5/ It is recognized that the visual inspection acceptance criteria for the core and for the cladding zones are the same. To maintain consistency with industry standards, separate zones are listed for the core and cladding.
6/ Based on a FOVIS with adequate magnification (see 5.1.1).

TABLE 5202-IV. Maximum allowed defect diameters (based on defect area) in microns, (for beginning of life, operational level repair, depot/intermediate level maintenance and repair). 1/, 6/

Fiber type/size	Core zone 1/, 5/		Cladding zone 1/		Contact zone 2/	
	Diameter range	Max defect diameter	Diameter range 4/	Max defect diameter	Diameter range	Max defect diameter
Single mode	0 to 25	0	25 to 120	0	130 to 250	10
50/125 micron	0 to 55	0	55 to 120	0	130 to 250	62
62.5/125 micron	0 to 70	0	70 to 120	0	130 to 250	78
100/140 micron 3/	0 to 120	0	120 to 135	0	165 to 280	135

1/ Maximum allowed defect coverage area of 2.5 percent of core area equates to a maximum allowed defect coverage diameter of 16 percent of the core diameter or the diameter as listed in this table.
2/ Maximum allowed defect coverage area of 125 percent of core area equates to a maximum allowed defect coverage diameter of 160 percent of core diameter or the diameter as listed in this table.
3/ Specified for fiber with polyimide coating.
4/ Inspection encompasses maximum allowed coverage area of defect for both core and cladding, but diameter range is given for cladding only. See second column to left in table for core diameter range.
5/ It is recognized that the visual inspection acceptance criteria for the core and for cladding are the same. To maintain consistency with industry standards, separate zones are listed for the core and cladding.
6/ Based on a FOVIS with adequate magnification (see 5.1.1).

4.1 Inspection coverage. Inspections shall be performed in search of defects, scratches, catastrophic surface damage, and when specified, for catastrophic subsurface damage. The acceptance criteria for defects and scratches in each environment shall be as specified in 4.1.1. Rejection criteria for catastrophic damage at the surface and below the surface (subsurface) shall be as specified in 4.1.2 and 4.1.3, respectively.

Source: https://assist.dla.mil -- Downloaded: 2016-12-31T21:08Z
Check the source to verify that this is the current version before use.

4.1.1 Defects and scratches. Acceptance criteria shall vary by zones and by the type of action taken. Suitability of any defects found shall be determined by the percent area within each zone. Defects shall include any contamination (both particulate, fluid and any combination of the two) and damage other than scratches (flaws such as pits, chips, embedded debris; catastrophic damage such as cracks, hackle and shatter). Different types of actions include those for beginning of life, depot/intermediate level maintenance, depot/intermediate level repair, operational level maintenance, and operational level repair. The specific acceptance criteria that shall be used for defects and scratches in each action taken are specified in 4.2 or 4.3, as applicable.

4.1.2 Catastrophic surface damage. This inspection shall be done only by direct visual observation of the FOVIS display. Inspection is to determine if there are any cracks, hackle or shattering on the surface of the optical fiber. Catastrophic surface damage is any crack, hackle or shattering observed. Also, the inability to focus on the ferrule end face or part of the ferrule end face is considered a result of catastrophic surface damage. Any catastrophic surface damage requires replacement of that single ferrule connector or terminus. Surface flaws such as pits, chips and embedded debris shall not be included as catastrophic surface damage.

4.1.3 Catastrophic subsurface damage. This inspection shall be done only by direct observation of the FOVIS display. Inspection shall determine if there are any cracks below the surface of the optical fiber. Any cracks below the surface require replacement of that single ferrule connector or terminus. Like those on the surface, subsurface cracks can propagate resulting in the complete loss of transmitted light in that optical fiber. Technique to be performed is addressed in 5.1.2.

Source: https://assist.dla.mil -- Downloaded: 2016-12-31T21:08Z
Check the source to verify that this is the current version before use.

4.2 Level of inspection. Requirements for inspection shall apply for the specific action taken (4.2.1 through 4.2.3).

4.2.1 Inspection, beginning-of-life. The criteria for acceptable level of defects and scratches shall be as specified in table 5202-I with the acceptance criteria for the beginning-of-life. Inspection for both catastrophic surface damage and catastrophic subsurface damage (subsurface cracks) shall be performed at the beginning of life (during initial fabrication or termination).

4.2.2 Inspection, after operational level maintenance. The criteria for acceptable level of defects and scratches shall be as specified in table 5202-II. Inspection for catastrophic surface damage shall be performed. A catastrophic subsurface inspection is not done (required) as part of a field/fleet connector mating operation. The subset of maintenance actions in which the impact to the fiber optic connection is limited to fiber optic connector mating operations is addressed in 4.2.2. Otherwise, the same inspection requirement for catastrophic subsurface damage as specified in 4.2.3 shall apply.

4.2.3 Inspection, after operational level repair, depot/intermediate level maintenance and repair. The criteria for acceptable level of defects and scratches shall be as specified in table 5202-I for both operational level repair and depot/intermediate level maintenance and repair. A replacement of fiber optic single ferrule connectors or termini and the substitution of a new cable are considered a restoration. A restoration shall be done to achieve beginning-of-life requirements. Inspection for catastrophic surface damage shall be performed during operational level repair and during depot/intermediate level maintenance and repair. In addition, inspection for catastrophic subsurface damage shall be performed when both ends of the cable assembly are accessible. Access to both ends may be through a single fiber optic link or a series of links.

4.2.4 Inspection, after mating operation. The criteria for acceptable level of scratches and defects shall be as specified in table 5202-II with the acceptance criteria for the operational level maintenance. Inspection for catastrophic surface damage shall be performed also. A catastrophic subsurface inspection is not done (required) as a part of a field/fleet connector mating operation.

4.3 Coverage area for allowed diameters. For convenience, the maximum allowed diameter for a specified maximum allowable coverage area is provided in table 5202-III for operational level maintenance and in table 5202-IV for beginning of life, for operational repair and for depot level maintenance and repair.

4.3.1 Beyond the contact zone. No acceptance criteria are specified beyond the contact zone (diameters larger than the maximum for the contact zone).

5. Implementation. Ferrule end face visual inspection is intended to be implemented (1) at the beginning–of-life, (2) after operational level maintenance and repair, and (3) after depot/intermediate level maintenance and repair. It is recommended that the impact be accessed for implementation on existing contracts.

5.1 Inspection method. Method of inspection shall conform to or be equivalent to that specified in Part 5 of MIL-STD-2042 for shipboard applications. Method of inspection shall conform to or be equivalent to that specified in subordinate Work Package 008 01 of NAVAIR 01-1A-505-4/T.O. 1-1A-14-4/TM 1-1500-323-24-4 for aircraft applications. For other (general) applications, the method of inspection shall conform to or be equivalent to that specified in either subordinate Work Package 008 01 of NAVAIR 01-1A-505-4/T.O. 1-1A-14-4/TM 1-1500-323-24-4 or to that specified in part 5 of MIL-STD-2042.

5.1.1 Magnification.

5.1.1.1 Navy shipboard. Inspections shall be performed with the microscope equivalent magnification of 400X (see 3.17).

5.1.1.2 General applications. These inspections are for non-Navy shipboard and other applications where a magnification is not specified. Inspections shall be performed with the microscope equivalent magnification of 200X (see 3.18).

5.1.2 Visual inspection tool.

Source: https://assist.dla.mil -- Downloaded: 2016-12-31T21:08Z
Check the source to verify that this is the current version before use.

5.1.2.1 Navy shipboard. Inspections shall be performed using either an optical microscope or a Fiber Optic Video Inspection System (FOVIS) on single ferrule connectors and termini that are not inserted into a multiple termini connector. Inspections shall be performed using a Fiber Optic Video Inspection System (FOVIS) for termini inserted into a multiple termini connector.

5.1.2.2 General applications. These inspections are for non-Navy shipboard and other applications where the visual inspection tool is not specified. Inspections shall be performed using a Fiber Optic Video Inspection System (FOVIS).

5.1.2.3 Conformance. The Fiber Optic Video Inspection System (FOVIS) shall meet Measurement 5203. For Navy shipboard use, the FOVIS shall be approved by the Naval Sea Systems Command (NAVSEA).

5.1.3 Backlit technique, catastrophic subsurface damage. Surface observation of a dark or discolored area may indicate a subsurface crack (in addition to contamination). To distinguish the subsurface damage (crack), the optical fiber shall, when specified, be backlit (or back lighted). This shall be done by shinning white (visible spectrum) light into the other end of the optical fiber. A flash light or other white light source shall be used to “illuminate” the other end of the optical fiber. This “illumination” requires that the other end of the optical fiber is accessible.

5.1.4 Beyond the contact zone. Removal of any loose debris before final inspection shall be implemented as part of normal practice.

Source: https://assist.dla.mil -- Downloaded: 2016-12-31T21:08Z
Check the source to verify that this is the current version before use.

5.2 Automated capture and analysis software. This inspection is applicable when automated analysis is specified and, when required, captured using a Fiber Optic Video Inspection System (FOVIS). Inspection of ferrule end face defects and scratches shall be performed using automated capture and analysis software that meets or exceeds the allowed inspection criteria listed in table 5202-I or table 5202-II, as applicable. The Fiber Optic Video Inspection System (FOVIS) shall meet Measurement 5203. For Navy shipboard use, the FOVIS shall be approved by the Naval Sea Systems Command (NAVSEA). It is on the onus of the inspection facility or manufacturer to demonstrate software inspection criteria meets or exceeds the allowed inspection criteria in these tables and Measurement 5203. Diameters for the zones in the automated capture and analysis software shall conform to table 5202-III.

6. NOTES

6.1 Lessons learned.

6.1.1 Cleaning is paramount. Military maintainer experience has shown that about 80 percent of fiber optic maintenance actions are traced back to cleaning at fiber optic connection interfaces. Use of an inspect-clean-inspect process (such as the one found in the General Series Technical Manual) ensures proper operation once maintenance action is complete.

6.1.2 Verification for requirement to clean. Cleaning of ferrule end faces on connector termini make a substantial difference as verified by mating durability testing. Regular mating and de-mating of connectors causes end face contamination. Contamination that occurs in a clean environment is primarily internal to the connector. Internal contamination includes the “residue” resulting from connector wear (friction). Findings are that pitting and other permanent defects result from not cleaning before each mating. This contamination can lead to fiber cracks, fractures, and in some instances chips that require terminus replacement.

6.2 Intended use. On these platforms, the fiber optic cable assemblies intended to be measured for optical loss include (1) cable harnesses, (2) other type constructions of a cable assembly, (3) equipment (electronic module/package) such as a WRA, LRM, LRU, or LRC with internal fiber optics, (4) other miscellaneous cabling. As noted in the purpose (see 1.0), this inspection is for platforms and systems in which the ferrule end face must be returned to beginning of life inspection criteria after depot/intermediate level maintenance and after both operational level and depot/intermediate level repair. This is the intent for most platforms and systems. For platforms and systems in which the ferrule end face does not need to be returned to beginning of life inspection criteria after maintenance or repair, the alternate tables in Measurement 5404 is used instead. Measurement 5404 involves more risk and as such has been relegated to a legacy measurement.

6.3 Interpretation of undesired ferrule end face features The ferrule end face (including area with optical fiber) can be grouped by either classifying the undesired features or by inspection features. An explanation of these grouping is provided in 6.3.1 and 6.3.2.

6.3.1 Classification of undesired features. Undesirable features found on the ferrule end face (including optical fiber) are classified as either damage or contamination.

6.3.1.1 Damage. Damage is any end face flaw, fault or imperfection in the optical fiber and ferrule end face as a result of the cleaving, curing and polishing processes during fabrication/termination and as a result of mechanical (such as mating, impact) and environmental (such as temperature, vibration) induced stresses. Damage includes scratches, cracks, pits, chips, embedded debris, hackle and areas of observed shatter.

MEASUREMENT 5202

Source: https://assist.dla.mil -- Downloaded: 2016-12-31T21:08Z
Check the source to verify that this is the current version before use.

6.3.1.2 Contamination. Contamination is the unwanted existence of particulates and/or fluids on the surface of a ferrule end face. Particulates consist of trace or minuscule amount of specks or solid debris that is sufficient in size to be visible under magnification. Particulates can include dirt, dust and shavings from vibration/chaffing of parts. Fluids are liquids or other low flow resistant materials that deposit thin layer film (contaminant) on the ferrule end face. The fluid type contaminants include oils, solvents, coolants, lubricants and their dried residues.

6.3.1.3 Application. A failure analysis relies on successful identification of the type damage that occurred. Classification of features by damage or contamination is useful for purposes of evaluation and failure analysis. Cleaning systems and cleaning agents are evaluated by their effectiveness on different contaminants. Representative particulates, fluids, and combinations of the two are used in the evaluation. One criterion in polishing an end face is to successfully remove damage while simultaneously not imparting damage to the ferrule end face.

6.3.2 Inspection features. Inspection features to observe on the ferrule end face are listed in two groups, defects and scratches.

6.3.2.1 Defects. Defects include both damage and contamination with some exceptions. The exception to damage is a scratch. The exception to contamination is that it applies only to contaminants that are not able to be removed by cleaning.

6.3.2.2 Scratches. Scratches, typically linear, found on the surface that are of shallow depth, very narrow width, and relatively long length. No risk assessed as to compromising the structural integrity of the material.

6.3.2.3 Application. Classification of features by defects or scratches is useful for purposes of inspection. This classification does not require that the end user (observer) or end face analysis software make a determination if an undesirable feature present is either damage or contamination. The determination (other than scratches) is based on the location and coverage. For a human observer, coverage is more effectively defined in terms of allowed total area. For an end face analysis software computation, coverage is more effectively defined in terms of quantities of allowed defects and maximum diameters; however, for consistency, the same percent area coverage is used as when a direct observation is made.

Source: https://assist.dla.mil -- Downloaded: 2016-12-31T21:08Z
Check the source to verify that this is the current version before use.

MEASUREMENT 5203

FOVIS WITH DISPLAY/AUTOMATED CAPTURE AND ANALYSIS SOFTWARE EVALUATION CRITERIA

1. Purpose. This requirement establishes the criteria for determining (evaluating) the suitability of a Fiber Optic Video Inspection System (FOVIS) with a display (screen), with automated capture and analysis software, or both. The FOVIS is used to perform a ferrule end face visual inspection for contamination and damage. The evaluation criteria are based on detection rather than on measuring specific dimensions or geometries (see 6.5.5).

2. APPLICABLE DOCUMENTS.

2.1 General. The documents listed in this section are specified in sections 3, 4, and 5 of this standard practice. This section does not include documents cited in other sections of this standard practice or recommended for additional information or as examples. While every effort has been made to ensure the completeness of this list, document users are cautioned that they must meet all specified requirements documents cited in sections 3, 4, and 5 of this standard practice, whether or not they are listed.

2.2 Government documents.

2.2.1 Specifications, standards and handbooks. The following specifications, standards and handbooks form a part of this document to the extent specified herein. Unless otherwise specified, the issues of these documents are those cited in the solicitation or contract.

DEPARTMENT OF DEFENSE STANDARD

MIL-STD-2042 - Fiber Optic Cable Topology Installation Standard Methods for Naval Ships

(Copies of this document are available online at http://quicksearch.dla.mil/ or from the Standardization Document Order Desk, 700 Robbins Avenue, Building 4D, Philadelphia, PA 19111-5094.)

DEPARTMENT OF DEFENSE PUBLICATION

NAVAIR 01-1A-505-4/ T.O. 1-1A-14-4/ TM 1-1500-323-24-4 - Aircraft Fiber Optic Cabling, Technical Manual, Installation and Testing Practices.

(A copy of this document is available online at: https://mynatec.navair.navy.mil. NATEC has three different processes to obtain the manual, depending on if you are Government personnel (military and civilians), Contractors with a Government contract, or everyone else. If unable to access this Web Site or require further assistance, contact (1) NATEC Customer Service: 619.545.1888, (2) NATEC Website Status Hotline: 619.545.1706, or (3) NATEC Customer Service E-mail: nani_customerservice@navy.mil.)

2.3 Order of precedence. Unless otherwise noted herein or in the contract, in the event of a conflict between the text of this document and the references cited herein, the text of this document takes precedence. Nothing in this document, however, supersedes applicable laws and regulations unless specific exemption has been obtained.

3. Definitions (see 6.3).

3.1 Chip. The separation or removal of a small piece of material parallel to the end face surface. Such removal on the optical fiber end face may result in impeding the transmission of light. This type of chip may also be referred to as a parallel type fracture (see 3.13).

3.2 Cladding. A layer in the optical fiber that is of a lower refractive-index material, surrounds the optical fiber core (i.e., a core of higher refractive-index material), and is used to achieve reflection of light waves back into the optical fiber core. Besides confining light waves to the core, the cladding provides some protection to the core, and also transmits evanescent waves that are usually bound to waves in the core. These evanescent waves will propagate in the cladding and even extend beyond. The evanescent waves will not radiate away if the cladding is sufficiently thick. They will radiate away if the fiber is bent too sharply, that is, bent sharper than a certain radius called the critical radius.

Source: https://assist.dla.mil -- Downloaded: 2016-12-31T21:08Z
Check the source to verify that this is the current version before use.

3.3 Contamination. The existence of particulates and/or fluids on the surface of a ferrule end face.

3.4 Core. The center region of an optical fiber through which light is transmitted. In a dielectric waveguide, such as an optical fiber, the refractive index of the core must be higher than that of the cladding. Most of the optical power is confined to the core.

3.5 Crack. Defect, that is typically linear, that is of very narrow width relative to length and that is of considerable depth. Crack may be on surface or internal to the material. Potential risk assessed for crack to impact the structural integrity of the material. This type of crack may also be referred to as a perpendicular type fracture (see 3.13).

3.6 Damage. Any end face fault or imperfection in the optical fiber as a result of the cleaving, curing and polishing processes during fabrication/termination and as a result of mechanical (such as mating, impact) and environmental (such as temperature, vibration) induced stresses. Damage includes scratches, cracks, pits, chips, embedded debris, hackle and shattered area.

3.7 Debris. A substance or article not part of the ferrule end face that may cause potential damage to the ferrule end face or imped (including totally block) the transmission of light from the ferrule end face though the remainder of the optical path. Debris is a substance that can be removed by proper cleaning.

3.8 Defect. Damage, other than a scratch, and contamination, not able to be removed by cleaning, on a magnified ferrule end face observed under direct lighting.

3.9 End face, ferrule. Surface that makes contact with the mating ferrule. Ferrule end face is the surface perpendicular to the optical fiber longitudinal axis. The ferrule end face with an APC polish is at and 8^0 angle for the surface perpendicular to the optical fiber longitudinal axis.

3.10 End face, fiber. Part of the ferrule end face that consists of the exposed radial area (or end face) of the optical fiber core and cladding.

3.11 Fluids. Liquids or other low flow resistant materials that deposit thin layer film (contaminant) on the ferrule end face. The fluid type contaminants include oils, solvents, coolants, lubricants and their dried residues.

3.12 FOVIS − Fiber Optic Video Inspection System. The FOVIS can view the optical fiber on the ferrule end face of a connector or terminus. Different adapters are provided to allow viewing for different ferrule diameters, for termini within a multiple termini connector and for connectors behind various bulkhead adapters. This system consists of a probe (camera with probe tip), display (that may include a computer with automated capture and analysis software) and interconnecting cabling. Single or dual magnification allows for general or fiber inspection. General inspection (at a lower magnification and sometimes “generically” referred to as 200X) is used to view the end face for cleanliness. A larger area of the ferrule is displayed (larger field of view) with the resulting smaller image size. Fiber inspection (at a higher magnification and sometimes “generically” referred to as 400X) is used to view the end face for fiber imperfections. A smaller area of the ferrule is displayed (smaller field of view) with the resulting larger image size.

3.13 Fracture. The separation of optical fiber material perpendicular to the end face surface, results in impeding the transmission of light and may propagate resulting in complete light transmission path blockage. This type of fracture may also be referred to as a crack (see 3.5). Alternatively, a fracture may also be the separation or removal of a small piece of material parallel to the end face surface. This type of fracture may also be referred to as a chip (see 3.1).

3.14 Hackle. A fracture in the optical fiber with roughly cut, jagged edges on the surface of the optical fiber end face.

MEASUREMENT 5203

Source: https://assist.dla.mil -- Downloaded: 2016-12-31T21:08Z
Check the source to verify that this is the current version before use.

3.15 Inspection, polish quality. Critically review the optical fiber end face to assess the degree (quality) of fabrication (especially polishing) features (flaws) in terms of scratches and defects.

3.16 Inspection, general. Critically review the optical fiber end face to assess the degree of cleanliness.

3.17 Magnification, 200X, optical. Intent is to cite a magnification value based on requirements for detection, field of view and fiber image size and approximately equivalent to the magnification of a 200X optical microscope. This magnification term is intended more for legacy reference. The term “General Inspection” is preferred and used to cite performance limits (see table 5203-I) to be met for the intended application (see 3.16).

3.18 Magnification, 400X, optical. Intent is to cite a magnification value based on requirements for detection, field of view and fiber image and approximately equivalent to the magnification of a 400X optical microscope. This magnification term is intended more for legacy reference and the term “Polish Quality Inspection” is preferred and used to cite performance limits (see table 5203-I) to be met for the intended application (see 3.15).

3.19 Microscope, optical. Inspection device in which image is focused, magnified and directed to observer’s eye through optical lenses.

3.20 Microscope, video. See FOVIS.

3.21 Particulate. Trace or minuscule amount of specks or solid debris that is sufficient in size to be visible under magnification. Particulates can include dirt, dust, shavings from vibration/chaffing of parts and other debris.

3.22 Pit. An indentation, in the ferrule end face, observed as either an irregular or an approximately circular light or dark area and detected as a defect (see 3.8).

3.23 Scratch. Linear or curvilinear defect found on the surface that is of shallow depth, of very narrow width, and relative long length. No risk assessed as to compromising the structural integrity of the material.

3.24 Shatter. The breakage of the optical fiber into multiple fractures (see 3.13).

4. General requirements. The pass/fail criteria for a polish quality inspection shall be applied to a FOVIS with a 400X magnification. The pass/fail criteria for a general inspection shall be applied to a FOVIS with a 200X magnification.

4.1 Acceptance criteria, FOVIS with display (screen). If ferrule end face visual inspection portion for defects and scratches is performed by observing the FOVIS display and is found to meet or exceed the allowed inspection criteria listed in table 5203-I, then it is acceptable to use this alternative inspection tool. It is on the onus of the inspection facility or manufacturer to demonstrate that the visually observed raised features, recessed features and image characteristics meets or exceeds the allowed inspection criteria in this table.

4.2 Acceptance criteria, FOVIS with automated capture and analysis software. If ferrule end face visual inspection portion for defects and scratches is performed using automated capture and analysis software and is found to meet or exceed the allowed inspection criteria listed in table 5203-I, then it is acceptable to use this alternative inspection tool. It is on the onus of the inspection facility or manufacturer to demonstrate software inspection criteria meets or exceeds the allowed inspection criteria in table 5203-I.

MEASUREMENT 5203

Source: https://assist.dla.mil -- Downloaded: 2016-12-31T21:08Z
Check the source to verify that this is the current version before use.

4.3 Inspection ferrule set configurations. This inspection ferrule set is used to verify Fiber Optic Video Inspection System (FOVIS) conformance per MIL-STD-1678-5 Measurement 5203 paragraphs 5.1.1 through 5.1.3 and table 5203-I. This set is to include five inspection ferrules. The five inspection ferrules in the set are to have the recessed (etched, see 5.1.1), raised (deposited, see 5.1.2), and recessed impacted (indented, see 5.1.3) features (one type of feature per inspection ferrule). The features on two of the five inspection ferrules are to be of the polish quality inspection (see table 5203-I) and the features on another two of the five inspection ferrules are to be of the general inspection (see table 5203-I). The fifth inspection ferrule feature (raised) is common between the polish quality and general inspections.

4.3.1 Inspection ferrule set with a PC polish. Each inspection ferrule in this five inspection ferrule set is to consist of features placed on the PC polished ferrule end face of a ST connector.

4.3.2 Inspection ferrule set with a APC polish. Each inspection ferrule in this five inspection ferrule set is to consist of features placed on the APC polished ferrule end face of a FC connector.

TABLE 5203-I. Requirements to determine measurement/analysis suitability.

Parameter 1/, 2/	Pass/Fail Criteria		Verification
	Polish quality inspection	General inspection	
Detection of recessed feature using mechanically etched line width 3/	0.4 micron width minimum, low contrast 8/	2 micron width minimum, low contrast 8/	See 5.1.1
Detection of recessed features using multiple mechanically etched lines 3/, 5/	0.4 micron width minimum 8/, separation 2 micron maximum, low contrast	2 micron width minimum 8/, separation 2 micron maximum, low contrast	See 5.1.1
Detection of raised feature using deposited solid circle	2 micron diameter minimum, high contrast		See 5.1.2
Detection of recessed feature using impact indentation	0.5 micron diameter minimum, low contrast	2 micron diameter minimum, low contrast	See 5.1.3
Detection of recessed feature using impact indentation	0.5 micron diameter minimum, four at corner of 50 micron square and fifth in center, low contrast	2 micron diameter minimum, four at corner of 50 micron square and fifth in center, low contrast	See 5.1.3
Detection of deposited fluids	fluid detected	fluid detected	See 5.2
Field of View (FOV): Length and width (or diameter) appearing on display (screen) 4/	140 microns minimum 500 microns maximum	500 microns minimum 1000 microns maximum	See 5.3
Screen size 4/	7 x 7 cm (3 x 3 inch) minimum 13 x 13 cm (5 x 5 inch) maximum	7 x 7 cm (3 x 3 inch) minimum 13 x 13 cm (5 x 5 inch) maximum	See 5.4
Automated analysis software defect area calculated	≥ 0.2 square microns	≥ 3 square microns	See 5.5
Automated analysis software scratch surface area calculated	≥ 5 square microns	≥ 30 square microns	See 5.6
Auto centering	6/	6/	See 5.7
Auto focusing	7/	7/	See 5.8
Auto focusing with focus stacking	7/	7/	See 5.9

1/ Recessed features are for damage (lines for scratches, indentations for pits). Raised features are for contamination (deposited solid circles for particulates.
2/ Parameters more representing desired detection geometries (such as indentations and solid circles) are used in lieu of traditional features such as deposited lines and multiple deposited lines.
3/ This mechanically etched feature is a long, narrow depression with more rounded corners between the floor and walls. The rounded corners will act to scatter light (versus a square trench with a highly reflective geometry to light).
4/ This parameter is evaluated only with use of a display (done manually or through a visual observation) instead of automatically (through FOVIS automated capture and analysis software).
5/ A set of parallel lines separated by no more than the specified distance.
6/ Optical fiber or ferrule hole appears at the middle of the field of view with no manual adjustment performed along the x and y axes.
7/ Meets 5.1.1, 5.1.2, 5.1.3, 5.2, 5.3 and 5.4 with no manual adjustment performed along the z axis.
8/ Also meets a length/width ratio ≥ 30:1.

MEASUREMENT 5203

Source: https://assist.dla.mil -- Downloaded: 2016-12-31T21:08Z
Check the source to verify that this is the current version before use.

5. Verification. An evaluation shall be performed on the Fiber Optic Video Inspection System (FOVIS). Determination of acceptance criteria (pass/fail criteria) suitability for each of the first six parameters listed in table 5203-I shall be included in the evaluation when done manually (through a visual observation on a display). Determination of acceptance criteria (pass/fail criteria) suitability for each of the last three parameters listed in table 5203-I shall be included in the evaluation when done automatically (through FOVIS automated capture and analysis software). Both acceptance criteria (pass/fail criteria) suitability apply to a FOVIS with both display and automated capture and analysis software.

5.1 Inspection ferrule set. The inspection ferrule set shall be used to determine suitability of the FOVIS to meet (1) Detection of recessed feature simulating a scratch using etched line, (2) Detection of raised feature simulating particulate contamination using a deposited solid circle, and (3) Detection of recessed feature simulating non-scratch type damage (such as pits) using impacted indentations.

5.1.1 Etched line inspection ferrules. Markings/lines shall be etched onto glass fiber surface to create a long, narrow depression with edges between the depression floor and walls that will act to scatter (versus be a highly reflective to) light. Depth of the etching shall be between 3 and 8 nm. Glass surface on which the etched line is etched shall be polished to obtain an optical return loss of at least 43 dB. Line width shall conform to table 5203-I. An alternate term for an etched line is a scratched line. Inspection ferrule shall consist of one etched line (see 5.1.1.1) and multiple etched lines (see 5.1.1.2). Two single etched line inspection ferrules shall be used. One etched line inspection ferrule shall contain the etched lines corresponding to the width and length/width ratio for the polish quality inspection. The other etched line inspection ferrule shall contain the width and length/width ratio corresponding to the diameter for the general inspection. Each etched line shall be of low contrast with the glass surface.

5.1.1.1 Single etched line on inspection ferrule. A single etched line with the specified minimum line width and length/width ratio shall be located in the center of the upper half on the glass surface (see table 5203-I).

5.1.1.2 Multiple etched lines on inspection ferrule. There shall be a minimum of three etched lines for the specified minimum line width and length/width ratio (see table 5203-I). This minimum of three etched lines shall be adjacent to and separated from each other by no more than two line widths. The multiple etched lines shall be located in the center of lower half on the glass surface.

5.1.2 Deposited solid circle inspection ferrules. A solid circle shall be deposited onto the glass fiber surface with a metallic type material. This solid circle is used to verify contrast. Height of deposit above the glass surface shall be between 60 to 80 nm. This metallic deposited solid circle shall have a highly reflective (mirrored) surface. Glass surface on which the solid circle is deposited shall be polished to obtain an optical return loss of at least 43 dB. This deposited solid circle with high contrast to the glass surface shall be detected. Circle diameter shall conform to table 5203-I.

5.1.2.1 Single deposited solid circle on inspection ferrule. A single deposited solid circle inspection ferrule with the specified minimum diameter shall be located in the center of the glass surface (see table 5203-I).

5.1.3 Impacted indentation inspection ferrule. Diameter of impact on the glass surface shall conform to table 5203-I. Depth of each impacted indentation shall be between 60 and 80 nm. Glass surface on which the indentations are impacted shall be polished to obtain an optical return loss of at least 43 dB. Inspection ferrule shall consist of a single impact indentation (see 5.1.3.1) and multiple impact indentations (see 5.1.3.2). Two single impacted indentation inspection ferrules shall be used. One single impacted indentation inspection ferrule shall contain the impacted indentation corresponding to the diameter for the polish quality inspection. The other single impacted indentation inspection ferrule shall contain the impacted indentation corresponding to the diameter for the general inspection. Each impacted indentation shall be of low contrast with the glass surface.

Source: https://assist.dla.mil -- Downloaded: 2016-12-31T21:08Z
Check the source to verify that this is the current version before use.

5.1.3.1 Single impacted indentation on inspection ferrule. Each single impacted indentation inspection ferrule shall have one, approximately circular, indentation in the center of the upper half on the glass surface. The diameter of the impacted indentation is defined from the smallest circle able to circumscribe the impacted indentation. This diameter shall not exceed the specified diameter (see table 5203-I).

5.1.3.2 Multiple impacted indentations on inspection ferrule. There shall be five impacted indentations each of them approximately circular. Four of the impacted indentations shall be placed at the corners of a square of 50 micron length with the fifth impacted indentation in the center. This pattern of five impacted indentations shall be located on the lower half of the glass surface. The diameter of each impacted indentation is defined from the smallest circle able to circumscribe the impacted indentation. This diameter shall not exceed the specified diameter (see table 5203-I).

5.2 Fluids. Each of the fluids listed in table 3409-AI in Measurement 3409 of MIL-STD-1678-3 shall be visible on the FOVIS display and shall be detected, using the automated analysis software. Each fluid shall be applied to a ferrule with a glass fiber and inserted into the FOVIS. The ferrule shall be cleaned before each subsequent fluid is applied.

5.3 Field of View (FOV). The method to determine the field of view specified in 5.3.1 assumes no magnification errors in linearity.

5.3.1 Measurement method 1. Insert a ferrule into the probe with a known value, in microns, for the cladding diameter. Measure the diagonal of the FOVIS display and the cladding diameter on the display in millimeters. Measuring device (such as a scale/ruler placed on the FOVIS video monitor) is to have an accuracy of at least 0.5 mm (0.02 inch) or use a scale containing, at a minimum, 0.5 mm (0.2 inch) intervals.

5.3.2 Calculation for measurement method 1. Calculate the field of view by multiplying the known value for the cladding diameter in microns by the diagonal of the FOVIS display in millimeters and divide this product by the cladding diameter in millimeters that was measured on the FOVIS display.

5.3.3 Measurement method 2. An alternate measurement method allowed shall be to use an inspection ferrule in which two circles containing the diameters for the minimum and maximum limits for the field of view are deposited onto the glass fiber surface with a metallic type material.

5.4 Screen size.

5.4.1 Measurement method. Measuring device (such as a scale/ruler placed on the FOVIS video monitor or screen) is to have an accuracy of at least 0.5 mm (0.02 inch).

5.5 Automated analysis software defect surface area calculation (pass/fail). The inspection ferrule set shall be used to determine suitability of the FOVIS to detect and disqualify a larger than acceptable area when the pass/fail criteria are set to do so (see 6.5.7). The inspection ferrule specified in 5.1.2 shall be used and repeated using the inspection ferrule specified in 5.1.3 for this verification.

5.6 Automated analysis software scratch surface area calculation (pass/fail). The inspection ferrule set shall be used to determine suitability of the FOVIS to detect and disqualify a scratch when the pass/fail criteria are set to do so. The inspection ferrule specified in 5.1.1 shall be used for this verification. Analysis software is expected to distinguish and eliminate scratch area when the width is less than the specified detection width (i.e., minimize potential of rejecting good product or having false positives).

5.7 FOVIS auto centering feature (x and y plane positioning). When specified, the FOVIS shall include a feature to position the ferrule hole in the center of the field of view (i.e., positioning by movement within the x and y plane, plane of the ferrule end face, or by other means) to place the optical fiber (or ferrule hole) in the middle of the field of view. The means to perform this positioning shall require no manual adjustment and be integral to or within the FOVIS housing. The FOVIS may be designed to allow this feature to be enabled or disabled.

5.8 FOVIS auto focusing feature (z axis positioning). When specified, the FOVIS shall include a feature to position the sensor relative to the ferrule end face (i.e., positioning by movement along the z axis or by other means) to obtain maximum convergence or clarity (such as a maximum contrast) of the image. The means to perform this positioning shall require no manual adjustment and be integral to or within the FOVIS housing. The FOVIS may be designed to allow this feature to be enabled or disabled.

MEASUREMENT 5203

Source: https://assist.dla.mil -- Downloaded: 2016-12-31T21:08Z
Check the source to verify that this is the current version before use.

5.9 FOVIS auto focusing feature (z axis positioning) with focus stacking (see 6.5.6). When specified (and in lieu of 5.8), the FOVIS shall include a feature to position the sensor relative to the ferrule end face (i.e., positioning by movement along the z axis or by other means) to obtain maximum convergence or clarity (such as a maximum contrast) of the image. In addition, the FOVIS shall include a focus stacking technique to combine the results of images taken at different focal distances. The additional steps shall be accomplished by increasing the sharpness (convergence or clarity) of blurred objects in both the foreground and background. Increasing the sharpness of these blurred objects shall be used to further identify recessed scratches and both raised and recessed defects in analysis of the focus stacking technique. The means to perform this positioning shall require no manual adjustment and be integral to or within the FOVIS housing. The FOVIS may be designed to allow this feature to be enabled or disabled.

6. NOTES.

6.1 Lessons learned.

6.1.1 Variation in acceptance among inspectors. Significant variation was found among inspectors in determining if the ferrule end face met the visual inspection criteria for contamination and damage. One approach to reduce this variation is to more quantitatively specify the visual inspection criteria (as done in Measurement 5203). A further reduction in variation is the use of a FOVIS augmented with automated capture and analysis software. An evaluation must first be performed to verify that the acceptance criteria can be suitably measured (analyzed) using the FOVIS augmented with automated capture and analysis software.

6.2 Intended use. On these platforms, the fiber optic cable assemblies intended to be measured for optical loss include (1) cable harnesses, (2) other type constructions of a cable assembly, (3) equipment (electronic module/package) such as a ATR, LRC, LRM, LRU or WRA with internal fiber optics, (4) other miscellaneous cabling.

6.3 Interpretation of undesired ferrule end face features. Undesired features on the ferrule end face (including area with optical fiber) can be grouped depending upon intent of use. Inspection features to observe on the ferrule end face are listed in two groups, defects and scratches. Classification of features by flaws and debris on the ferrule end face (such as for cleaning effectiveness systems evaluation) is listed in two groups, damage and contamination. An explanation of these grouping is provided in 6.3.1 and 6.3.2.

6.3.1 Classification of undesired features. Undesirable features found on the ferrule end face (including optical fiber) are classified as either damage or contamination.

6.3.1.1 Damage. Damage is any end face flaw, fault or imperfection in the optical fiber and ferrule end face as a result of the cleaving, curing and polishing processes during fabrication/termination and as a result of mechanical (such as mating, impact) and environmental (such as temperature, vibration) induced stresses. Damage includes scratches, cracks, pits, chips, embedded debris, hackle and areas of observed shatter.

6.3.1.2 Contamination. Contamination is the unwanted existence of particulates and/or fluids on the surface of a ferrule end face. Particulates consist of trace or minuscule amount of specks or solid debris that is sufficient in size to be visible under magnification. Particulates can include dirt, dust and shavings from vibration/chaffing of parts. Fluids are liquids or other low flow resistant materials that deposit thin layer film (contaminant) on the ferrule end face. The fluid type contaminants include oils, solvents, coolants, lubricants and their dried residues.

6.3.1.3 Application. A failure analysis relies on successful identification of the type damage that occurred. Classification of features by damage or contamination is useful for purposes of evaluation and failure analysis. Cleaning systems and cleaning agents are evaluated by their effectiveness on different contaminants. Representative particulates, fluids, and combinations of the two are used in the evaluation. One criterion in polishing and end face refurbishment processes or methods is to successfully remove damage while simultaneously not imparting damage to the ferrule end face.

6.4 Inspection features. Inspection features to observe on the ferrule end face are listed in two groups, defects and scratches.

6.4.1 Defects. Defects include both damage and contamination with some exceptions. The exception to damage is other than a scratch. The exception to contamination is that it applies only to contaminants that are not able to be removed by cleaning.

6.4.2 Scratches. Scratches, typically linear, found on the surface that is of shallow depth, of very narrow width, and relative long length. No risk assessed as to compromising the structural integrity of the material.

Source: https://assist.dla.mil -- Downloaded: 2016-12-31T21:08Z
Check the source to verify that this is the current version before use.

6.4.2.1 Application. Classification of features by defects or scratches is useful for purposes of inspection. This classification does not require that the end user (observer) or end face analysis software make a determination if an undesirable feature present is either damage or contamination. The determination (other than scratches) is based on the location and coverage. For a human observer, coverage is more effectively defined in terms of allowed total area. For an end face analysis software computation, coverage is more effectively defined in terms of quantities of allowed defects and maximum diameters; however, for consistency, the same percent area coverage is used as when a direct observation is made.

6.4.2.2 Zones. To apply inspection criteria (see Measurement 5202), the fiber end face is separated into different zones (Core, Cladding, Adhesive, Contact). Each zone is allowed a certain coverage area of defects and a certain number of scratches (if any) before a connector to determine if the ferrule end face meets the polish/cleaning inspection criteria. Depending on when in the life cycle the inspection is performed, different criteria are applied for each zone. Basically, the closer to the fiber core, the more stringent the acceptance criteria for defects and scratches.

6.5 Requirement clarifications.

6.5.1 Benefit to detect multiple etched lines. The benefit is the ability to detect two scratches side-by-side that is separated by a specified distance versus having the two scratches blurred together as one big scratch. The latter could result in rejection of an acceptable polish. The latter would result in two smaller scratches (of lesser surface area) being detected as one larger scratch (of greater surface area).

6.5.2 Benefit to detect recessed features under both high and low contrast. The benefit is the ability to detect a recessed feature such as a pit. Some recessed features are only visible at either a high or a low level of contrast. The ability to view under both a high and a low contrast level will allow detection of recessed features that may have otherwise been missed.

6.5.3 Benefit to auto focusing feature with stacking. The benefit of stacking is that focusing at multiple points along the z axis would allow detection of subsurface features (such as a hairline crack) or large surface protrusions. These features could be missed with a focus restricted to a surface focus only.

6.5.4 Benefit to detect raised and recessed features under a polish with a specified return loss. The benefit is being able to detect a scratch on an optical fiber with an enhanced polish. Since the optical fiber is polished to obtain this degree of return loss, scratches on the optical fiber must be detected using a FOVIS with this level of polishing.

6.5.5 Evaluation criteria based on detection. To ensure compliance to the detection criterion, it is necessary to specify minimum defect and scratch dimensions. The assumption is made that if the minimum features are detected (recognized, and properly measured if automated analysis software is used), then larger features will be likewise detected.

6.5.6 Auto focusing with focus stacking. This technique is performed manually with laboratory grade microscopes and imaging systems to ensure all features at the surface are detected. In previous handheld field FOVIS evaluations, this technique was performed manually also to ensure detection of all features. It is the intent to foster development of this enhanced capability to current handheld field FOVIS products offered for sale by including this requirement as an option (when specified) along with the evaluation criteria.

6.5.7 Software defect surface area calculation. Preference is to perform a software analysis with a sufficient number of pixels to adequately determine the surface area of the defect. A more conservative approach is to determine the surface area by the smallest circle able to circumscribe the defect. There is a disadvantage of an analysis using this latter conservative approach. Such an analysis may fail ferrules that could have otherwise passed using a more accurate analysis (greater number of pixels used to determine shape of defect surface).

Source: https://assist.dla.mil -- Downloaded: 2016-12-31T21:08Z
Check the source to verify that this is the current version before use.

6.5.8 Human determination required if defect is catastrophic. Some types of defects may or may not be catastrophic in terms of preventing the transmission of light. These types of defects include and may be classified as chip (see 3.1), crack (see 3.5), fracture (see 3.13), hackle (see 3.14), pits (see 3.22) and shatter (see 3.24). The defect must be observed and a human determination made if a particular defect or a portion of the defect is catastrophic. The fiber end face of a catastrophic defect may need to be rejected even if the total area of the defect is within the acceptable limit.

6.5.9 Human determination required when characteristic of optic fiber. The end face for some types of optical fibers contains microstructures. An example of a microstructure being a characteristic of the optic fiber and not a defect is for a polarization maintaining fiber. The defect must be observed and a human determination made if total area of the defect or a portion of the defect is instead a characteristic of the optical fiber.

Source: https://assist.dla.mil -- Downloaded: 2016-12-31T21:08Z
Check the source to verify that this is the current version before use.

SUPPLEMENTAL SUPPORT PROCESSES
5301

Source: https://assist.dla.mil -- Downloaded: 2016-12-31T21:08Z
Check the source to verify that this is the current version before use.

PRE-CONDITION THERMAL CYCLING OF TEMPERATURE RANGE 2 CABLE

1. Purpose. This supplemental support process covers the preconditioning of commercially available fiber optic cable with a test operating temperature range of -55 ^{0}C to 165 ^{0}C that is used in design phase or qualification testing. This preconditioning of the fiber optic cable is to occur prior to the fabrication of test samples in which the cable is apart or prior to the testing of the cable. A standardized precondition is being imposed for less variability in the test data. See 4.2 and 4.3 for restrictions on and applicable usage.

2. APPLICABLE DOCUMENTS.

2.1 General. The documents listed in this section are specified in sections 3, 4, and 5 of this standard practice. This section does not include documents cited in other sections of this standard practice or recommended for additional information or as examples. While every effort has been made to ensure the completeness of this list, document users are cautioned that they must meet all specified requirements of documents cited in sections 3, 4, and 5 of this standard practice, whether or not they are listed.

2.2 Government documents.

2.2.1 Specifications, standards, and handbooks. The following specifications, standards, and handbooks form a part of this document to the extent specified herein. Unless otherwise specified, the issues of these documents are those cited in the solicitation or contract.

DEPARTMENT OF DEFENSE SPECIFICATION

MIL-PRF-85045 - Cables, Fiber Optics, (Metric), General Specification For

(Copies of this document are available online at http://quicksearch.dla.mil/ or from the Standardization Document Order Desk, 700 Robbins Avenue, Building 4D, Philadelphia, PA 19111-5094.)

2.3 Order of precedence. Unless otherwise noted herein or in the contract, in the event of a conflict between the text of this document and the references cited herein, the text of this document takes precedence. Nothing in this document, however, supersedes applicable laws and regulations unless a specific exemption has been obtained.

3. Definitions.

3.1 Cable, fiber optic. A fiber optic cable is a cable that contains optical fibers. The cable may be of a tight buffer or a loose tube design.

3.2 Cable bundle, fiber optic. Single fiber cables grouped together and usually secured by lacing tape. The cable bundle can be placed in convoluted tubing, used in various protected harness configurations or used as is in an open cable harness configuration.

3.3 Cable, loose tube. A fiber optic cable design is one configured with one or more optical fibers are fitted loosely within a tube, giving the optical fibers freedom to move. This mobility and isolation from the tube minimizes the effects of external forces on the performance of the link. The isolation allows cable expansion and contraction with temperature independent of the optical fibers.

3.4 Cable, tight buffer. A fiber optic cable design is one configured with an additional protective coating (additional buffer layer) is applied directly over a coated (buffered) fiber. Buffer material helps preserve the fiber's inherent strength and provides increased mechanical protection. A tight buffer cable allows cable placement in tighter bends, and allows for more roughed handling (such as better crush and impact resistance).

3.5 Cabling, fiber optic. Fiber optic cabling is a term used to include single fiber cable, multiple fiber cable, fiber optic cable bundles and fiber optic cable harnesses. The (optical) fiber is the optical conduit or waveguide transmission media, whereas metallic conductor (wire) is used in an electrical cable. Cable structure is added to make the fibers easier to handle and maintain. The fiber is a thin piece of glass (with a diameter usually around 125 micrometers) that contains and transports the light signals.

Source: https://assist.dla.mil -- Downloaded: 2016-12-31T21:08Z
Check the source to verify that this is the current version before use.

4. General requirements.

4.1 Point in the test cycle. Preconditioning shall be performed prior to test sample fabrication or prior to the start of cable testing.

4.2 Restrictions on usage. This supplemental support practice shall not be used for cable that meets a military specification, such as MIL-PRF-85045. Military cables, such as MIL-PRF-85045 contain a requirement that the cable shall not require preconditioning. This supplemental practice shall not be used for cable being used as part of a test sample or prior to testing of cable for a Naval shipboard application.

4.3 Applicable usage. This supplemental support practice may be used for commercial cable already installed in a military mobile platform when the performance limit was exceeded during one test (thermal shock) and when this cable was used in testing while qualifying other components or the cable. Since this cable has both a test history and is used in service, addressing the known optical performance issue rather than identifying a new cable with potentially unknown flaws is the direction to be taken.

5. Implementation.

5.1 Preconditioning method. Perform 80 thermal cycles from -30 degrees C to 165 degrees C using a ramp rate (for both high and low temperatures) of 2 degrees C per minute with a 1 hour dwell time at both the high and low temperature extremes. The cable must be cut to the test lengths (such as 10 meters) prior to being preconditioned.

5.2 Test sequence performance after preconditioning. The thermal shock test shall be performed early in the test sequence. For instance, for other cabling components, the thermal shock test should be performed after test samples are fabricated and the initial insertion loss and return loss are performed. Performing thermal shock at this point in the test sequence may determine if the preconditioning is successful.

6. NOTES.

6.1 Lessons learned.

6.1.1 Use of commercial versus military specification cable. Test experience has shown that most commercially available cable should be preconditioned prior to test sample fabrication or prior to cable testing. Cable that meets most military specifications have a requirement that the cable shall not be preconditioned prior to testing and can meet the cable requirements without preconditioning.

6.2 Approach. The approach used for preconditioning is based on a cable preconditioning technical paper written by NASA Goddard Space Flight Center. The technical paper is titled “Fiber optic thermal preparation to ensure stable operation” by William J. Thomes Jr., Richard F. Chuska, Melanie N. Ott, Frank V. LaRocca, Robert C. Switzer, Shawn L. MacMurphy.

6.3 Constraints. This constraint for preconditioning applies only to the currently selected commercially available cable. Once similar cable that meets a military specification and requires no preconditioning becomes available, any need for preconditioning must be done by the cable manufacturer prior to sale of the cable. No preconditioning is to be done for the military specification cable containing a requirement that preconditioning shall not be performed prior to testing.

Source: https://assist.dla.mil -- Downloaded: 2016-12-31T21:08Z
Check the source to verify that this is the current version before use.

LEGACY CRITERIA FOR MEASUREMENTS AND SUPPORT PROCESSES

5401 – 5404

Source: https://assist.dla.mil -- Downloaded: 2016-12-31T21:08Z
Check the source to verify that this is the current version before use.

LAUNCH CONDITION LEGACY CRITERIA

1. Purpose. The legacy criteria for launch conditions is that criteria contained in the Optical test Measurement Guide that is not incorporated into MIL-STD-1678 part 2 Measurement Support Process 2203. These legacy criteria are provided for historical purposes only. The replacement of different TIA standards invalidated some of the legacy criteria from being specified in Measurement Support 2203. Also, the implementation of a prescription approach nullified other legacy criteria from being specified in Measurement Support Process 2203. There is no intention to incorporate the legacy criteria into a future revision of Measurement Support Process 2203.

2. APPLICABLE DOCUMENTS

2.1 General. The documents listed in this section are specified in sections 3, 4, and 5 of this standard practice. This section does not include documents cited in other sections of this standard practice or recommended for additional information or as examples. While every effort has been made to ensure the completeness of this list, document users are cautioned that they must meet all specified requirements of documents cited in sections 3, 4, and 5 of this standard practice, whether or not they are listed.

2.2 Non-Government publications. The following documents form a part of this document to the extent specified herein. Unless otherwise specified, the issues of these documents are those cited in the solicitation or contract.

TELECOMMUNICATIONS INDUSTRY ASSOCIATION (TIA)

TIA/EIA-455-34	-	Interconnection Device Insertion Loss Test.
TIA-455-58	-	Core Diameter Measurement of Graded-Index Optical Fibers.
TIA-455-78	-	Optical Fibres - Part 1-40: Measurement Methods and Test Procedures: Attenuation.
TIA-455-176	-	Optical Fibres Part 1-20, Measurement Methods and Test Procedures, Fibre Geometry.
TIA-455-177	-	IEC-60793-1-43 Optical Fibres – Part 1-43: Measurement Methods and Test Procedures – Numerical Aperture.
TIA-526-14	-	Fiber Optic Power Loss Measurements of Installed Multimode Cable Plant.

(Copies are available from http://www.global.ihs.com or to Global Engineering Documents, 1990 M Street NW, Suite 400, Washington, DC 20036.)

2.3 Order of precedence. Unless otherwise noted herein or in the contract, in the event of a conflict between the text of this document and the references cited herein, the text of this document takes precedence. Nothing in this document, however, supersedes applicable laws and regulations unless a specific exemption has been obtained.

3. Definitions.

3.1 Far field/near field distributions, overfilled launch condition. An overfilled launch condition is one that produces a nominal launch spot of diameter greater than or equal to the nominal core diameter of the test fiber and a nominal launch condition numerical aperture (NA) greater than or equal to the nominal NA. Due to measurement precision, a tolerance of ±5 percent may be applied to this definition.

3.2 Mandrel wrap, multimode. Multimode cable may be wrapped to deplete power from the higher order modes with the result of minimizing transient effects from causing variations in the optical power level.

3.3 Mandrel wrap, single mode. Single mode cable is mandrel wrapped to increase the attenuation coefficient in the second and third order modes (used as the means of mode conditioning to filter out higher order modes).

Source: https://assist.dla.mil -- Downloaded: 2016-12-31T21:08Z
Check the source to verify that this is the current version before use.

3.4 Mandrel wraps, single mode detector end. Mandrel wraps attenuate power in the second and third order modes introduced into the test sample cable assembly by the test sample. If the loss of the test sample is low, then higher order modes are not being generated in the test sample. Detector end mandrel wraps are usually not necessary since a few meters of fiber also attenuate the second and third order modes.

3.5 Mandrel wraps, single mode, launch end. Mandrel wraps attenuate power in the second and third order modes launched into the test sample by the source.

4. Setup.

4.1 Methods to obtain a restricted launch condition. Mandrel wrap, restricted launch cables and beam optics are listed as acceptable approaches.

4.1.1 Mandrel wrap. The mandrel diameters listed will not provide a 70/70 restricted launch nor will any other practical mandrel wraps. The mandrel diameters listed in TIA/EIA-455-34 provide a more conservative launch condition than the 70/70 restricted launch. These mandrel diameters are acceptable for use. No verification for Near Field and Far Field optical power distributions of restricted launch conditions are required as long as the optical source used provides an overfilled launch condition.

4.1.1.1 Restricted launch condition for 50/125 micron fiber size. Place a 25 mm (.98 inch) mandrel at the launch end of each channel of the DUT to simulate the TIA restricted launch condition for the 50/125 micron fiber size.

4.1.1.2 Restricted launch condition for 62.5/125 micron fiber size. Place a 20 mm (.98 inch) mandrel at the launch end of each channel of the DUT to simulate the TIA restricted launch condition for the 62.5/125 micron fiber size.

4.1.2 Launch cables. Launch cables with the fiber sizes listed as a suitable alternative means to provide a restricted launch condition. No verification, such as using for Near Field and Far Field optical power distributions, are required as long as the optical source used provides an overfilled launch condition.

4.1.2.1 Restricted launch condition for 50/125 micron fiber size. Use of a specialty fiber (such as 42/125 micron fiber for the 50/125 micron fiber size) with a minimum length of 2 meters (6.5 feet) may be placed in front of each channel of the DUT to simulate a more restrictive launch condition.

4.1.2.2 Restricted launch condition for 62.5/125 micron fiber size. Use of a 50/125 micron fiber with a minimum length of 2 meters (6.5 feet) may be placed in front of each channel of the DUT to simulate a 70/70 restricted launch condition.

4.1.2.3 Restrictions for use of other specialty fibers. Near field and far field measurements are to be performed to verify conformance to restricted launch specifications on any specialty fiber used. Restricted launch condition shall not be more restrictive than that for a 70/70 launch condition. For the tolerance on the launch condition, use a tolerance of +10/-5 percent to obtain upper and lower limits. The compliance for a 70/70 restricted launch condition is evaluated at the minimum and maximum tails of the intensity curve at the indicated percent of the peak intensity.

4.1.3 Beam optics. Use beam optics with a spot restrictor and a NA restrictor.

4.2 Overfilled launch condition, multimode.

4.2.1 Use of launch cables. Launch conditioning cables are not commonly used to provide an overfilled launch condition. Launching from a larger core into a smaller core does not necessarily provide an overfilled launch if the optical source has a restricted launch condition. The launch condition from the optical source should be obtained and provided in the test procedure or with the list of test equipment.

4.2.2 Tests requiring a multimode overfilled launch condition. This is a more conservative launch condition and the vendor assumes a risk by using it. Measurements, using an overfilled launch condition, are required only for the initial insertion loss test. Power meter measurements, used for obtaining the overfilled launch condition, must have a sufficient detector area for capturing the higher order, loosely guided modes.

MEASUREMENT 5401

Source: https://assist.dla.mil -- Downloaded: 2016-12-31T21:08Z
Check the source to verify that this is the current version before use.

5. Procedure.

5.1 Verification, multimode launch condition. Certification using Coupled Power Ratio (CPR) or Near Field/Far Field power distributions shall be provided or measurements shall be performed to obtain CPR or Near Field/Far Field power distributions. Verify how the adjustments to the optical setup will be done to provide the required restricted launch condition for specific tests to be performed. CPR for multimode, 62.5/125 fiber size launch conditions and 1,300 nm wavelength is provided in 4.1.1 and 4.1.2.

5.1.1 Overfilled launch condition. For purposes of performing a CPR measurement for optical source acceptability, an acceptable overfilled launch condition is one within the range with a CPR from 20.5 to 22.5. Typical laboratory grade LED launch condition has a CPR from 20.5 to 22.5. Annex A of TIA-526-14 specifies the CPR limits for overfilled launch conditions (category 1) of multimode fibers.

5.1.2 Restricted launch condition. A 20 mm (6.5 feet) mandrel wrap launch condition has a CPR of approximately 21.0.

5.2 Verification, single mode launch condition. No verification is required if a mandrel is used in conjunction with a Fabry Perot type laser source.

5.3 Corrective action, loss of mandrel wrap. If the mandrel wrap becomes undone during testing, a determination must be made if the data is valid. If there is no difference in the optical power, with and without the mandrel, then the test data is valid. If the change in optical transmittance is less than 0.1 dB, there is no concern. If the change in optical transmittance approaches 0.5 dB, then a determination cannot be made if the test sample passes, fails, or is on the borderline. The test should be redone with a mandrel wrap.

5.4 Verification in terms of power distribution. Numerical Aperture (NA) is defined in terms of a worst case (overfilled) far field, power intensity distribution. Core diameter is defined in terms of a worst case (overfilled) near field, power intensity distribution. If the launch condition is not specified in the component specification or applicable test standard, a 70/70 restricted launch condition (70 percent of core diameter and 70 percent of the NA) may be used. Restricted launch condition shall not be more restrictive than that for a 70/70 launch condition. The compliance for a 70/70 restricted launch condition is evaluated at the minimum and maximum tails of the intensity curve at 5 percent of the peak intensity (see table 5401-I and table 5401-II).

5.4.1 Tolerance on power distribution. Launch condition tolerance for a 70/70 restricted launch. Use a tolerance of +10/-5 percent to obtain upper and lower limits for the tolerance. An example is provided for a 70/70 restricted launch condition tolerance for 62.5/125 micron (um) optical fiber in 5.4.2.1 for near field and 5.4.2.2 for far field distributions.

5.4.2 Example. An example is provided for a 70/70 restricted launch condition tolerance for 62.5/125 micron (um) optical fiber.

5.4.2.1 Near field. Use a tolerance of +10/-5 percent to obtain lower and upper limits of 40.6 to 50.0 um for core diameter.

Calculations: 70 percent - 5 percent of core diameter = 0.65 x core diameter = 0.65 x 62.5 µm = 40.6 µm.

Likewise, a 70 percent + 10 percent of core diameter = 0.8 x core diameter = 0.8 x 62.5 µm = 50 µm.

5.4.2.2 Far field. Use a tolerance of ±5 percent to obtain upper and lower limits of 0.18 to 0.22 for NA.

Calculations: Where the NA for a far field, overfilled launch condition is 0.275, then a 70 percent - 5 percent of NA = 0.65 x NA = 0.65 x 0.275 = 0.178 ~ 0.18.

Likewise a 70 percent + 10 percent of NA = 0.8 x NA = 0.8 x 0.275 = 0.22.

5.4.3 Restricted launch condition for 50/125 micron fiber size (see TABLE 5401-I). Specified measurement procedure shall be used except pattern type shall be evaluated at the intensity levels specified in table 5401-I.

Source: https://assist.dla.mil -- Downloaded: 2016-12-31T21:08Z
Check the source to verify that this is the current version before use.

TABLE 5401-I. Restricted launch tolerances for 50/125 micron fiber size with a NA of 0.20.

Pattern type	Intensity level (from peak value)	Minimum tolerance	Maximum tolerance	Measurement procedure
Far Field	50 percent	0.125	0.155	TIA-455-177
Near Field	50 percent	39	48	TIA-455-58

5.4.4 Restricted launch condition for 62.5/125 micron fiber size (see table 5301-II).

TABLE 5401-II. 70/70 restricted launch tolerances for one common 62.5/125 micron fiber size with a NA of 0.275.

Pattern type	Intensity level (from peak value)	Minimum tolerance	Maximum tolerance	Measurement procedure
Far Field	5 percent	0.18	0.22	TIA-455-177
Near Field	2.5 percent	40.6	50.0	TIA-455-176

6. Notes

6.1 Mandrel wraps.

6.1.1 Constrain for the 50/125 micron fiber. A 50/125 micron optical fiber has an 80 percent aperture of the 62.5/125 micron optical fiber, but it has a parabolic versus constant transmittance over the cross-sectional area. Additional constraints applied to the 50 micron fiber (such as mandrel wraps) tend to restrict the launch conditions beyond acceptable limits.

6.1.2 Comparison of restricted launch conditions, mandrel wrap versus 70/70. The launch conditions resulting from a 20 mm mandrel wrap for the 62.5/125 micron fiber size falls somewhere between an overfilled and a 70/70 restricted launch condition (closer to the overfilled). With a 20 mm mandrel wrap, a non worst-case, value is obtained. Using a 20 mm mandrel wrap, the transient loss and loss due to highest order modes in the connector/test sample will not be observed.

6.1.3 Guidance for single mode selection. It is acknowledged that it is optimum to use the largest possible mandrel size that produces repeatable results. In this manner, bending loss is minimized. Smaller than optimum mandrel sizes were selected that will provide measurement consistency while more conservatively ensuring adequate mode conditioning for covering products from different vendors. Additional optical loss from bending will occur.

6.1.4 Single mode source jumper and mode filtering criteria. Ensure that there is a 2 meter minimum length of fiber between the optical source and the test sample. Mode conditioning for filtering out higher order modes shall be performed by mandrel wrapping.

6.2 Launch fiber constraints.

Source: https://assist.dla.mil -- Downloaded: 2016-12-31T21:08Z
Check the source to verify that this is the current version before use.

6.2.1 Simulating overfilled launch conditions, multimode. There are several cases where overfilled or less restrictive launch conditions are required than available with existing test instrumentation. One case is where a transition from smaller to larger core fiber is required (such as when using an existing source switch on a multimode measurement system pigtailed with 50 micron fiber to test 100 micron fiber). Another is when the optical source does not provide an overfilled launch condition or this launch condition is not maintained through the measurement/ switching system. Launch conditioning cables with larger core fiber may be used to simulate the required launch condition with the constraints noted in this section. Launch conditioning cables with mixing may be required to achieve the required launch condition (smaller to larger requires mixing with a mode scrambler versus filtering by a mandrel). Verification of achieving the proper launch condition by acceptable methods stated in the section (Coupled Power Ratio or near field/far field distribution) must be performed. In cases where profiles for near field/far field distributions are given, approval for compliance only with a specified point on that profile must be obtained. It is the responsibility of the test activity to determine the launch conditioning cable to be used (with mandrel size if wrapping is necessitated to achieve an overfill without being overly conservative or a desired, less restrictive launch). Note that the launch condition verification must be done using the fiber under test. Any measures taken on the launch conditioning cable only are not appropriate.

6.2.2 Launch into smaller fiber sizes, single mode. An optical source with a standard 9/125 micron fiber pigtail may be used to launch light into a fiber with a smaller single mode core size. This will incur a loss, but the single mode should reestablish itself in the smaller mode field diameter fiber. It should be noted that care needs to be taken on the output end to ensure that all of the light exiting the test sample be captured by the detection system. The numerical aperture of some small mode field diameter fiber designs may be larger than the acceptance angle of the detection system or that of standard multimode fiber that might be used as pigtails on the detector. Light from a single mode fiber with a smaller mode field diameter cannot be transmitted to the detector through single mode fiber with a larger mode field diameter. From the smaller core fiber, no detector end switch, switch-to-detector jumper or detector with a larger core fiber pigtail can be used. The preference is to not do the mismatch on the detection end. Alternately, it is possible for development of a system that performs accurate measurements with a mismatch present, but this requires careful implementation and characterization before test results should be considered acceptable.

6.3 Optical source guidance.

6.3.1 Recommendation for purchasing a new source. Purchase LED optical sources with an overfilled launch condition and place mandrel wraps on the launch end of the cable assemblies under test. This configuration will allow for maximum flexibility of different launch condition requirements.

6.3.2 Disconnects. The light launch conditions at the optical source end must be maintained throughout the test (no disconnects permitted) for all measurements taken with that fiber as the active channel.

6.3.3 Centerline wavelength. The centerline wavelength of the optical source used shall be 1,300 nm ± 20 nm. Some tests in the military specifications contain a typographical error that states 1,330 nm ± 20 nm.

MEASUREMENT 5401

Source: https://assist.dla.mil -- Downloaded: 2016-12-31T21:08Z
Check the source to verify that this is the current version before use.

MEASUREMENT 5402

CHANGE IN OPTICAL TRANSMITTANCE LEGACY CRITERIA.

1. Purpose. The legacy criteria for the change in optical transmittance measurement are that criteria contained in the Optical test Measurement Guide that is not incorporated into Measurement 2101 in MIL-STD-1678 part 2. These legacy criteria are provided for historical purposes only. The implementation of a prescription approach nullified or invalidated the legacy criteria from being specified in Measurement 2102. There is no intention to incorporate the legacy criteria into a future revision of Measurement 2102. In the initial version of this document, this content was listed under Measurement 5202.

2. APPLICABLE DOCUMENTS

2.1 General. The documents listed in this section are specified in sections 3, 4, and 5 of this standard practice. This section does not include documents cited in other sections of this standard practice or recommended for additional information or as examples. While every effort has been made to ensure the completeness of this list, document users are cautioned that they must meet all specified requirements of documents cited in sections 3, 4, and 5 of this standard practice, whether or not they are listed.

2.2 Government documents.

2.2.1 Other Government documents, drawings, and publications. The following other Government documents, drawings, and publications form a part of this standard practice to the extent specified herein. Unless otherwise specified, the issues are these documents are those cited in the solicitation or contract.

NSWCCD-SSES ltr. 9504 Ser 963210/026 - Optical Test Measurement Guide, Test Suitability for Fiber Optic Cable Topology Components of 1 March 2005

(A copy of this letter can be obtained at NSWC DD Web Site in in the Policy and Guidance section under Testing Information. This NSWC Dahlgren fiber optic web site houses additional shipboard fiber optic information and policy letters that may be applicable to the requirements in this standard. Due to the dynamic nature of web addresses the current website URL can be obtained by e-mailing DLGR_NSWC_FOWEB@navy.mil with the subject line "WEBSITE URL REQUEST". An automated reply will contain the current web address.) (

2.3 Non-Government publications. The following documents form a part of this document to the extent specified herein. Unless otherwise specified, the issues of these documents are those cited in the solicitation or contract.

TELECOMMUNICATIONS INDUSTRY ASSOCIATION (TIA)

TIA-455-20	-	Measurement of Change in Optical Transmittance.
TIA/EIA-455-34	-	Interconnection Device Insertion Loss Test.
TIA-455-78	-	Optical Fibres Part 1-40 Measurements Methods and Test Procedures: Attenuation.

(Copies are available from http://www.global.ihs.com or to Global Engineering Documents, 1990 M Street NW, Suite 400, Washington, DC 20036.)

2.4 Order of precedence. Unless otherwise noted herein or in the contract, in the event of a conflict between the text of this document and the references cited herein, the text of this document takes precedence. Nothing in this document, however, supersedes applicable laws and regulations unless a specific exemption has been obtained.

3. Definitions.

3.1 Baseline measurement. The measurement to obtain the optical power level (optical transmittance) that is taken before the start of the test.

3.2 Change in optical transmittance. The calculation of each test measurement relative to a baseline measurement.

Source: https://assist.dla.mil -- Downloaded: 2016-12-31T21:08Z
Check the source to verify that this is the current version before use.

3.3 Test measurement. The measurement to obtain the optical power level (optical transmittance) that is taken at a point during the test or at the conclusion of the test. In reference to the baseline measurement, this measurement may be referred to as a “subsequent” measurement.

4. Setup.

4.1 Test jumpers.

4.1.1 Use at the launch end switch. Theoretically, a larger core fiber may be used at the launch end switch; however, difficultly in demonstrating adequate stability precludes its allowance.

4.1.2 Use at the detector end switch. Test jumper with a larger fiber size than the detector end switch may be used if it can be demonstrated that all light emitted from the fiber will be captured by the detector. To ensure all light emitted from the fiber is captured, a power meter with a wide area detector must be used.

4.2 Launch conditions. Historical background is provided on replaced standards for informational purposes only.

4.2.1 Multimode. The change in optical transmittance is to be performed using the specified restricted launch condition. For a restricted launch condition, a 70/70 launch condition or equivalent shall be used as defined in NSWCCD-SSES ltr. 9504 Ser 963210/026, Section XI. Note that an exception for the 100/140 micron fiber size is listed in NSWCCD-SSES ltr. 9504 Ser 963210/026, Section XI. The optical source used must provide an overfilled launch condition into the device used to restrict the launch condition. One exception is an optical source built to provide a particular restrictive launch.

NOTE: TIA-455-50, replaced by TIA-455-78, specified two methods to achieve restrictive launch. Method A specifies 5 turns around a smooth mandrel of different diameter for each core size (same as specified in TIA/EIA-455-34). Method B specified producing a 70/70 launch condition by the use of beam optics. See NSWCCD-SSES ltr. 9504 Ser 963210/026, Section XI to implement compliance for this launch condition.

4.2.2 Single mode. For components with single mode fiber, light launch conditions (mode conditioning for filtering out higher order modes), as listed in NSWCCD-SSES ltr. 9504 Ser 963210/026, Section XI shall be used.

NOTE: TIA-455-78 references TIA-455-77 (withdrawn 1/2003) for the higher order mode filter. Mandrel wrap mode filters include those that have a sufficient insertion loss (about 4 dB) or a determined cutoff wavelength. TIA-455-78 (IEC 60793-1-40) states the same two methods as TIA-455-50 (withdrawn 1/1998) for multimode, but is vague for single mode. An example of a higher order mode filter is given as a single loop of radius sufficiently small to shift cut-off wavelength below the minimum wavelength of interest. See NSWCCD-SSES ltr. 9504 Ser 963210/026, Section XI to implement compliance for the single mode launch condition.

4.3 Coupler (splitter).

4.3.1 Mode filtering. A coupler cannot be used as a mode filter. Specifically, a coupler must have the same core size as the fiber with the component being tested. For example to provide a restricted launch condition, a coupler with 50/125 micron fiber is not to be used when the fiber size for the component being tested (DUT) is 62.5/125 micron.

4.3.2 Modal dependence. A fused biconnic coupler is typically more mode sensitive than a substrate filter coupler.

4.3.3 Splitting or branching effect on launch condition. Couplers do not necessarily pass the launch condition through unchanged. Some legs may be more restrictive, one or more legs may be more fully filled (lower order modes may split down one or more legs whereas higher order modes down other legs).

4.3.4 Fiber size for acceptable usage. Use of a coupler with the same fiber size as the fiber for the component being tested is acceptable. This acceptance is contingent upon verification of acceptable launch conditions at the output legs of the coupler/acceptable launch conditioning after the coupler.

Source: https://assist.dla.mil -- Downloaded: 2016-12-31T21:08Z
Check the source to verify that this is the current version before use.

ATTENUATION RATE LEGACY CRITERIA.

1. Purpose. The legacy criteria for attenuation rate are that criteria contained in the Optical test Measurement Guide that is not incorporated into MIL-STD-1678 part 2 Measurement 2106. These legacy criteria are provided for historical purposes only. The replacement of different TIA standards invalidated the legacy criteria from being specified in Measurement 2106. There is no intention to incorporate the legacy criteria into a future revision of Measurement 2106. In the initial version of this document, this content was listed under Measurement 5203.

2. APPLICABLE DOCUMENTS

2.1 General. The documents listed in this section are specified in sections 3, 4, and 5 of this standard practice. This section does not include documents cited in other sections of this standard practice or recommended for additional information or as examples. While every effort has been made to ensure the completeness of this list, document users are cautioned that they must meet all specified requirements of documents cited in sections 3, 4, and 5 of this standard practice, whether or not they are listed.

2.2.1 Non-Government publications. The following documents form a part of this document to the extent specified herein. Unless otherwise specified, the issues of these documents are those cited in the solicitation or contract.

TELECOMMUNICATIONS INDUSTRY ASSOCIATION (TIA)

TIA/EIA-455-34	-	Interconnection Device Insertion Loss Test.
TIA-455-78	-	Optical Fibres: Part 1 - 40: Measurement Methods and Test Procedures: Attenuation.
TIA-455-133	-	Optical Fibres: Part 1-22: Measurement Methods and Test Procedures Length Measurement

(Copies are available from http://www.global.ihs.com or to Global Engineering Documents, 1990 M Street NW, Suite 400, Washington, DC 20036.)

2.3 Order of precedence. Unless otherwise noted herein or in the contract, in the event of a conflict between the text of this document and the references cited herein, the text of this document takes precedence. Nothing in this document, however, supersedes applicable laws and regulations unless a specific exemption has been obtained.

3. Definitions.

3.1 Attenuation. In an optical fiber or fiber optic cable, the decrease in power of an optical signal measured from input to output, such as measured over the entire length of an optical fiber. The attenuation can be in absolute power units, a fraction of a reference value, or in decibels. Attenuation in a fiber occurs as a result of absorption, reflection, scattering, deflection, dispersion, or diffusion rather than as a result of geometric spreading.

3.2 Attenuation rate. Attenuation for an optical fiber or fiber optic cable is usually expressed as an attenuation rate, that is, in the units of decibels/kilometer (dB/km). The attenuation is the loss in the optical signal or power level that occurs per unit of distance along its length. In dB/km, the attenuation rate, α, is given by the relation:

$$\alpha = [10 \log10(Pi/P0)]/L$$

Where: L is a given length of the DUT in kilometers,
Pi is the input power for the length L and
P0 is the output power for the length L.

In this form, the attenuation rate will be a positive value because Pi is the larger of the two powers.

Source: https://assist.dla.mil -- Downloaded: 2016-12-31T21:08Z
Check the source to verify that this is the current version before use.

4. Initial qualification test. Initial qualification: Measurement was performed to obtain the spectral attenuation. Legacy test method for performance of attenuation rate is listed in 6.1. The measurement was performed using a 30 mm mandrel for single mode and a 70/70 restricted launch condition for multimode fiber optic cable.

4.1. Multimode, initial qualification. Specific processes performed for legacy test methods are detailed in 6.1.1.

4.2 Single mode initial qualification. Specific processes performed for legacy test methods are detailed in 6.1.2.

5. Quality conformance test. When quality conformance testing was performed for attenuation rate at specified wavelength, one of two methods was allowed. The first method was to perform a spectral attenuation test using the test method cited for initial qualification. The alternative test method was using an Optical Time Domain Reflectometer (OTDR) measurement. Specific procedure for legacy test method is cited in 6.2. This measurement used a 30 mm mandrel for single mode and a restricted launch condition. This method of measurement is acceptable only when attenuation rate measurement is restricted to the transmission window of interest. As an alternative, a spectral attenuation test is allowed for conformance testing in lieu of the OTDR testing.

Note: TIA-455-61 was withdrawn in August 2003 and replaced by TIA-455-78B.

5.1 Test standard. TIA/EIA-455-78A included only the spectral attenuation test using beam optics using a cut back. TIA-455-78B is a shared IEC standard (IEC 60793-1-40) that includes tests as listed in 5.1a through 5.1c.

a. Beam optics with a 2 meter cut back (cut-back method, method A),

b. Beam optics with a 2 meter substitution fiber instead of a destructive cut back (insertion loss method, method B),

c. An OTDR (backscattering, method C).

6. NOTES

(This section contains information of a general or explanatory nature that may be helpful, but is not mandatory.)

6.1 Legacy test method, initial qualification test. Attenuation rate was performed in accordance with TIA-455-46 for test samples with multimode fiber and in accordance with TIA-455-78 for those with single mode fiber.

6.1.1 Legacy test method, multimode, initial qualification. Test was to be performed per TIA-455-46, procedure B (using beam optics) to obtain the restricted launch condition as shown in figure 1. The light launch conditions were in accordance with TIA/EIA-455-50, light launch conditions for spectral attenuation measurements, using beam optics to obtain the specified restricted launch condition (method B). The other method (method A) in TIA/EIA-455-50 uses beam optics to obtain an overfilled condition followed by a mandrel wrap mode filter to obtain the specified restricted condition. Be advised that TIA/EIA-455-50 was withdrawn and replaced by TIA-455-78B in June 2003. Also, A.1.3.2 of TIA-455-78B cites using beam optics to obtain the specified restricted launch condition. TIA-455-46A was withdrawn in January 2003. Currently, the test is performed per TIA-455-78, method A or annex A. This method is equivalent to the method in TIA-455-46, procedure B.

6.1.2 Legacy test method, single mode initial qualification. Test was performed per TIA-455-78, method A or annex A. The test method is equivalent in EIA/TIA-455-78A, the version replaced by TIA-455-78. Also, the test method is equivalent as the one in TIA-455-46, procedure B for multimode fiber. One means of removing higher order modes is cited by specifying EIA/TIA-455-77 which was withdrawn in January 2003.

6.2 Legacy method, quality conformance test. When the attenuation rate was performed on multimode or single mode using an OTDR, the test method is in accordance with TIA/EIA-455-61.

6.2.1 Limitations on legacy test standard cited for using an OTDR. TIA-455-61 had been withdrawn in August 2003 and replaced by TIA-455-78B. EIA/TIA-455-78A included only the spectral attenuation test using beam optics using a cut back.

MEASUREMENT 5403

Source: https://assist.dla.mil -- Downloaded: 2016-12-31T21:08Z
Check the source to verify that this is the current version before use.

FERRULE END FACE VISUAL INSPECTION LEGACY ALTERNATE CRITERIA

1. Purpose. This measurement establishes visual inspection criteria for ferrule end face condition (such as for any contamination or damage) versus ferrule end face geometry (as addressed in Measurement 5404). This inspection pertains to ferrules on both fiber optic termini and single ferrule connectors. This inspection is intended for visual inspections at beginning-of-life (including developmental, prototype, or production), after maintenance, and after repair (including rework and modification programs) on military platform fiber optic cable assemblies (including those interfaces on cable harnesses and those on the exterior of equipment modules). This measurement is for platforms and systems in which the ferrule end face does not need to be returned to beginning of life inspection criteria after maintenance or repair. For applications that return to beginning of life inspection criteria and for Navy shipboard applications, Measurement 5202 is used instead. Measurement 5202 is used for most applications as, except for operational level maintenance, the ferrule end face must meet the visual inspection requirements for the beginning of life criteria. Measurement 5404 was revised to be used as an adjunct with Measurement 5202 for applications in which the beginning of life criteria does not need to be met after operational level maintenance, operational level repair, depot/intermediate level maintenance, and depot/intermediate level repair. Lessons learned have found that increased risk negated potential cost savings. This measurement has been relegated to a legacy measurement.

2. Applicable documents.

2.1 General. The documents listed in this section are specified in sections 3, 4, and 5 of this standard practice. This section does not include documents cited in other sections of this standard practice or recommended for additional information or as examples. While every effort has been made to ensure the completeness of this list, document users are cautioned that they must meet all specified requirements of documents cited in sections 3, 4, and 5 of this standard practice, whether or not they are listed.

2.2 Other Government documents, drawings, and publications. The following other Government documents, drawings, and publications form a part of this standard practice to the extent specified herein. Unless otherwise specified, the issues are these documents are those cited in the solicitation or contract.

NAVAIR 01-1A-505-4/ T.O. 1-1A-14-4/ TM 1-1500-323-24-4	Installation and Testing Practices Aircraft Fiber Optic Cabling.

(A copy of this document is available online at: https://mynatec.navair.navy.mil. NATEC has three different processes to obtain the manual, depending on if you are Government personnel (military and civilians), Contractors with a Government contract, or everyone else. If unable to access this Web Site or require further assistance, contact (1) NATEC Customer Service: 619.545.1888, (2) NATEC Website Status Hotline: 619.545.1706, or (3) NATEC Customer Service E-mail: nani_customerservice@navy.mil.)

2.3 Order of precedence. Unless otherwise noted herein or in the contract, in the event of a conflict between the text of this document and the references cited herein, the text of this document takes precedence. Nothing in this document, however, supersedes applicable laws and regulations unless a specific exemption has been obtained.

3. Definitions (see 6.3). Definitions shall be in accordance with those found in 3.0 of MIL-STD-1678-1 Measurement 5202 except as noted below.

3.1 Action. Efforts expended at beginning of life, operational level maintenance, operational level repair, depot/intermediate level maintenance, or depot/intermediate level repair. The ferrule end face of a fiber optic single ferrule connector or terminus must conform to specified visual inspection criteria for defects and scratches after one of the cited actions are performed.

Source: https://assist.dla.mil -- Downloaded: 2016-12-31T21:08Z
Check the source to verify that this is the current version before use.

4. General requirements. Ferrule end face visual inspection shall include those at beginning-of-life (including developmental, prototype, production, and replacement), after maintenance, and after repair (including rework and modification programs), on military platform fiber optic cable assemblies (including those interfaces on cable harnesses and those on the exterior of equipment modules). Inspections shall conform to 4.1 through 4.3.1 of MIL-STD-1678-1 Requirement 1305 except that the visual inspection criteria shall conform to table 5404-I for each of the five specified beginning of life, maintenance and repair actions (see 3.1) versus those cited in Measurement 5202. Column 2 of table 5404-I pertains to visual inspection criteria in Measurement 5202 (return to beginning of life criteria except for operational level maintenance), whereas, column 3 of table 5404-I pertains to visual inspection criteria in Measurement 5404 (return to criteria less conservative than that specified for beginning of life).

TABLE 5404-I. Comparison of requirements for each action.

Action	Measurement 5202	Measurement 5404
Beginning of life	Measurement 5202, table 5202-I	Measurement 5202, table 5202-I
Operational level repair	Measurement 5202, table 5202-I	Measurement 5202,table 5202-II
Depot/intermediate level maintenance	Measurement 5202,table 5202-I	Measurement 5404, Table 5404-II
Depot/intermediate level repair	Measurement 5202, table 5202-I	Measurement 5202, Table 5404-II
Operational level maintenance	Measurement 5202, table 5202-II	Measurement 5202, table 5202-II

4.1 Inspection, after operational level maintenance and repair. The criteria for acceptable level of defects and scratches shall be as specified in table 5202-II with the acceptance criteria for depot/intermediate level maintenance and repair.

TABLE 5404-II. End face visual inspection acceptance criteria, depot/intermediate level maintenance, and repair.1/, 8/, 10/, 12/

Zone letter	Zone name	Allowed defects, maintenance, repairs 10/ ,11/	Allowed scratches, maintenance, repairs
A	Core	< 2.5 % of core area 2/	None
B	Cladding	< 2.5 % of core area 3/	None > 3 micron width, 5 or less ≤ 3 micron width 9/
C	Epoxy	4/	No limit
D	Contact	< 125 % of core area 3/, 5/	10 percent of zone D 6/, 7/

1/ Inspections are based on the use of a FOVIS with the specified optical microscope equivalent magnification (see 5.1.1).
2/ Defects found in the core zone must total less than 2.5 percent of the core area to pass inspection (see note 10/). For the single mode fiber sizes with a nominal mode field of 9 microns, use a maximum allowable diameter of 10 (instead of 25) microns to calculate the core area. Likewise for the single mode fiber sizes with a mode field with a nominal of 5 microns, use a maximum allowable diameter of 7 microns to calculate the core area.
3/ The amount of defects found in the core and cladding zones collectively also must be less than 2.5 percent of the core area (see note 10/).
4/ Epoxy zone width is insufficient to specify criteria.
5/ Defects found in the core, cladding, epoxy and contact zones collectively also must total less than 125 percent of the core area. For the single mode fiber, use a maximum allowable diameter of 9 (instead of 25) microns to calculate the core area.
6/ Less than 10 percent of contact zone area allowed with ceramic ferrules.
7/ No limits apply to this inspection criterion for a metal ferrule, a plastic ferrule, and a metal ferrule with a ruby jeweled insert.
8/ See 5.2 for additional allowance granted when using automated capture and analysis software.
9/ Scratch with less than a 3 micron width allowed within cladding zone as long as does not extend into the core zone.
10/ It is recognized that the visual inspection acceptance criteria for the core and for the cladding zones are the same. To maintain consistency with industry standards, separate zones are listed for the core and cladding.
11/ If a terminus or single ferrule connector is replaced on the end of a fiber optic cable or the external connector for an equipment module (such as an avionics box), then the beginning of life acceptance criteria applies.
12/ Platform specific requirements. In case of conflict between the platform specific acceptance criteria and this table, the platform specific acceptance criteria shall take precedence.

MEASUREMENT 5404

Source: https://assist.dla.mil -- Downloaded: 2016-12-31T21:08Z
Check the source to verify that this is the current version before use.

5. Implementation. Ferrule end face visual inspection is intended to be implemented (1) at the beginning–of-life, (2) after operational level maintenance and repair, and (3) after depot/intermediate level maintenance and repair. It is recommended that the impact be accessed for implementation on existing contracts.

5.1 Inspection method. Method of inspection shall conform to or be equivalent to that specified in subordinate Work Package 008 01 of NAVAIR 01-1A-505-4/T.O. 1-1A-14-4/TM 1-1500-323-24-4.

5.1.1 Backlit technique, catastrophic subsurface damage. Surface observation of a dark or discolored area may be that for a subsurface crack (in addition to contamination). To distinguish the subsurface damage (crack), the optical fiber shall, when specified, be backlit (or back lighted). This shall be done by shining white (visible spectrum) light from the other end of the optical fiber. A flash light or other white light source shall be used to “illuminate” the other end of the optical fiber. This “illumination” requires that the other end of the optical fiber is accessible.

5.1.2 Beyond contact zone. Removal of any loose debris before final inspection shall be implemented as part of normal practice.

5.1.3 Magnification. These inspections are for non-Navy shipboard and other applications where a magnification is not specified. Inspections shall be performed with the microscope equivalent magnification of 200X (see 3.18 of Measurement 5202).

5.2 Automated capture and analysis software. If ferrule end face defects and scratch inspection is performed using automated capture and analysis software that meets or exceeds the allowed inspection criteria listed in table 5404-I (as reference is made to Measurement 5202 table 5202-I, Measurement 5202 table 5202-II and Measurement 5404 table 5202-II, as applicable), then it is acceptable to use this alternative inspection tool. The onus is on the inspection facility or manufacturer to demonstrate that software inspection criteria meet or exceed the allowed inspection criteria in this table. Diameters for the zones in the automated capture and analysis software shall conform to Measurement 5202 table 5202-III, Measurement 5202 table 5202-IV, and table 5404-III, as applicable.

TABLE 5404-III. Maximum allowed defect diameters (based on defect area) in microns, depot level maintenance and repair. 1/, 6/, 7/, 8/

Fiber type/size	Core zone 1/, 5/		Cladding zone 1/		Contact zone 2/	
	Diameter range	Max defect diameter	Diameter range 4/	Max defect diameter	Diameter range	Max defect diameter
Single mode	0 to 25	1	25 to 130	1.5	130 to 250	10
50/125 micron	0 to 55	5	55 to 130	9	130 to 250	62
62.5/125 micron	0 to 70	7	70 to 130	10	130 to 250	78
100/140 micron 3/	0 to 145	14	120 to 145	16	165 to 280	135

1/ Maximum allowed defect coverage area of 2.5 percent of core area equates to a maximum allowed defect coverage diameter of 16 percent of the core diameter or the diameter as listed in this table.
2/ Maximum allowed defect coverage area of 125 percent of core area equates to a maximum allowed defect coverage diameter of 160 percent of core diameter or the diameter as listed in this table.
3/ Specified for fiber with polyimide coating.
4/ Inspection encompasses maximum allowed coverage area of defect for both core and cladding, but diameter range is given for cladding only. See second column to left in table for core diameter range.
5/ It is recognized that the visual inspection acceptance criteria for the core and for cladding are the same. To maintain consistency with industry standards, separate zones are listed for the core and cladding.
6/ Based on a FOVIS with adequate magnification (see 5.1.1 of Measurement 5202).
7/ If a terminus or single ferrule connector is replaced on the end of a fiber optic cable or the external connector for an equipment module (such as an avionics box), then the beginning of life acceptance criteria applies.
8/ Platform specific requirements. In case of conflict between the platform specific acceptance criteria and this table, the platform specific acceptance criteria shall take precedence.

MEASUREMENT 5404

Source: https://assist.dla.mil -- Downloaded: 2016-12-31T21:08Z
Check the source to verify that this is the current version before use.

6. Notes.

6.1 Lessons learned.

6.1.1 Cleaning is paramount. Military maintainer experience has shown that about 80 percent of fiber optic maintenance actions are traced back to cleaning at fiber optic connection interfaces. Use of an inspect-clean-inspect process (such as the one found in the General Series Maintenance Manual) ensures proper operation once maintenance action is complete.

6.1.2 Verification for requirement to clean. Cleaning of ferrule end faces on connector termini make a substantial difference as verified by mating durability testing. Regular mating and de-mating of connectors causes end face contamination. Contamination that occurs in a clean environment is primarily internal to the connector. Internal contamination includes the “residue” resulting from connector wear (friction). Findings are that pitting and other permanent defects result from not cleaning after each mating. This contamination can lead to fiber cracks, fractures, and in some instances, chips that require terminus replacement.

MEASUREMENT 5404

Source: https://assist.dla.mil -- Downloaded: 2016-12-31T21:08Z
Check the source to verify that this is the current version before use.

LEGACY MEASUREMENTS, RESIDUAL DOD-STD-1678 METHODS

5501 - 5504

Source: https://assist.dla.mil -- Downloaded: 2016-12-31T21:08Z
Check the source to verify that this is the current version before use.

LOW TEMPERATURE FLEXIBILITY (COLD BEND)

1. Purpose. A legacy measurement, listed as Method 2020 in DOD-STD-1678, is provided as an appendix to this measurement since Method 2020 is referenced in several military specifications and commercial standards. To aid in expediting the replacement of Method 2020 with a commercial standard and more updated test process, this test process is provided. This updated process is the one being used in fiber optic component military specifications. The placement of this updated variation in Measurement 5501 is a means to standardize how this measurement is performed. To minimize test variations and to permit more accurate comparison of test results from multiple sources, a "standardized" approach is specified. Method 2020 is provided in appendix A.

2. APPLICABLE DOCUMENTS

2.1 General. The documents listed in this section are specified in sections 3, 4, and 5 of this specification. This section does not include documents cited in other sections of this specification or recommended for additional information or as examples. While every effort has been made to ensure the completeness of this list, document users are cautioned that they must meet all specified requirements of documents cited in sections 3, 4, and 5 of this specification, whether or not they are listed.

2.2 Government documents.

2.2.1 Specifications, standards, and handbooks. The following specifications, standards, and handbooks form a part of this document to the extent specified herein. Unless otherwise specified, the issues of these documents are those cited in the solicitation or contract.

DEPARTMENT OF DEFENSE SPECIFICATION

MIL-STD-2042 - Fiber Optic Cable Topology Installation, Standard Methods for Naval Ships, Parts 1 to 6.

(Copies of this document are available online at http://quicksearch.dla.mil/ or from the Standardization Document Order Desk, 700 Robbins Avenue, Building 4D, Philadelphia, PA 19111-5094.)

2.2.2 Other Government documents, drawings, and publications. The following other Government documents, drawings, and publications form a part of this standard practice to the extent specified herein. Unless otherwise specified, the issues are these documents are those cited in the solicitation or contract.

NAVAIR 01-1A-505-4/T.O. 1-1A-14-4/ TM 1-1500-232-24-4- Installation and Testing Practices, Aircraft Fiber Optic Cabling.

(A copy of this document is available online at: https://mynatec.navair.navy.mil. NATEC has three difference processes to obtain the manual, depending on if you are Government personnel (military and civilians), Contractors with a Government contract, or everyone else. If unable to access this Web Site or require further assistance, contact (1) NATEC Customer Service: 619.545.1888, (2) NATEC Website Status Hotline: 619.545.1706, or (3) NATEC Customer Service E-mail: nani_customerservice@navy.mil.)

2.3 Non-Government publications. The following documents form a part of this document to the extent specified herein. Unless otherwise specified, the issues of these documents are those cited in the solicitation or contract.

TELECOMMUNICATIONS INDUSTRY ASSOCIATION (TIA)

TIA-455-13 - Visual and Mechanical Inspection of Fiber Optic Components, Devices, and Assemblies.
TIA-455-20 - Optical Fibres - Part 1-46: Measurement Methods and Test Procedures - Monitoring of. Changes in Optical Transmittance.
TIA-455-37 - Low or High Temperature Bend Test for Fiber Optic Cable.
TIA-455-57 - Preparation and Examination of Optical Fiber Endface for Testing Purposes.

(Copies are available from http://www.global.ihs.com or to Global Engineering Documents, 1990 M Street NW, Suite 400, Washington, DC 20036.)

Source: https://assist.dla.mil -- Downloaded: 2016-12-31T21:08Z
Check the source to verify that this is the current version before use.

2.4 Order of precedence. Unless otherwise noted herein or in the contract, in the event of a conflict between the text of this document and the references cited herein, the text of this document takes precedence. Nothing in this document, however, supersedes applicable laws and regulations unless a specific exemption has been obtained.

3. Tailoring of test from Method 2020 (see appendix A). Recommend that the low temperature (cold) bend test in accordance with TIA-455-37 as stated in paragraph 5 be performed in lieu of Method 2020. The low temperature flexibility (cold bend) test in accordance with procedure II of TIA-455-37 is essentially the same "double end" configuration test as the low temperature flexibility test in accordance with procedure III of Method 2020. Three variations are that the test (tensioning) masses are slightly different for some cable diameters, the preconditioning time is longer in Method 2020 (48 hours) than in TIA-455-37 (24 hours) and conditioning time is longer in Method 2020 (20 hours) than in TIA-455-37 (4 hours). In Method 2020, the radiant power measurement is performed before and after the test. The change in optical transmittance shall be performed in lieu of the radiant power measurement (see 4.2.2).

4. Test procedure.

4.1 Perform in accordance with TIA-455-37. DUT shall be tested in accordance with procedure II of TIA-455-37 with the test conditions listed in 4.1.1 through 4.1.6. The change in optical transmittance shall be measured during and after the test (from a baseline obtained before each test) in accordance with TIA-455-20 for transmitted power adhering strictly to the setup and test procedure specified in MIL-STD-1678 part 2 Measurement 2102. The DUT shall be visually examined in accordance with TIA-455-13 after the test.

4.1.1 Mandrel diameter. Equal to the minimum bend diameter of the cable rounded up to the nearest centimeter.

4.1.2 Conditioning temperature. Low operating temperature ± 2°C.

4.1.3 Tensioning masses. Test masses specified in TIA-455-37.

4.1.4 Number of mandrel turns. Three turns.

4.1.5 Examination magnification. Inspection DUT visually under ten power magnification.

4.1.6 Test times for optical measurements. Optical loss measurements at the low conditioning temperature prior to and after bending are not required. Post test loss or transmittance measurements are required after the sample has been returned to room temperature and the bends removed. The post test loss or transmittance values shall be compared to the loss or transmittance values obtained prior to the low temperature conditioning.

4.2 Substitution for measurement support processes cited in legacy method 1040.

4.2.1 Number of transmitting fibers, legacy method 1040. This support process is performed only if it is required by the specification sheet. Legacy method 1040 shall not be performed and no substitute support process is specified. The change in optical transmittance measurement (see MIL-STD-1678 part 2 Measurement 2102) is considered to be a more quantitative means to determine the same information. Method 1040 consists of illuminating one cabling (fiber bundle) end with white light. The other cabling end is photographed and the light intensity of each fiber compared.

4.2.2 Radiant power measurement, legacy method 6010. The change in optical transmittance measurement (see MIL-STD-1678 part 2 Measurement 2102) shall be substituted for legacy method 6010, the radiant power measurement. This temperature test measurement shall cite: "The change in optical transmittance shall be measured during and after the test (from a baseline obtained before each test) in accordance with TIA-455-20 for transmitted power adhering strictly to the setup and test procedure specified in Measurement 2102 in Part 2 of MIL-STD-1678."

Source: https://assist.dla.mil -- Downloaded: 2016-12-31T21:08Z
Check the source to verify that this is the current version before use.

APPENDIX A

METHOD 2020

LOW TEMPERATURE FLEXIBILITY (COLD BEND)

A.1 Purpose. This appendix provides Method 2020 as formerly specified in DOD-STD-1678. Method 2020 describes a procedure for determining the ability of a fiber optics cable to withstand bending around a mandrel at low temperature by measuring either the fiber breakage or the Changes in Optical Transmittance and by visual examination.

A.2. APPLICABLE DOCUMENTS

A.2.1 General. The documents listed in this section are specified in sections 3, 4, and 5 of this standard practice. This section does not include documents cited in other sections of this standard practice or recommended for additional information or as examples. While every effort has been made to ensure the completeness of this list, document users are cautioned that they must meet all specified requirements of documents cited in sections 3, 4, and 5 of this standard practice, whether or not they are listed.

A.2.2 Government documents.

A.2.2.1 Specifications, standards, and handbooks. The following specifications, standards, and handbooks form a part of this document to the extent specified herein. Unless otherwise specified, the issues of these documents are those cited in the solicitation or contract.

FEDERAL STANDARD

FED-STD-228 - Cable and Wire, Insulated; Methods of Testing.

(Copies of these documents are available online at http://quicksearch.dla.mil/or from the Standardization Document Order Desk, 700 Robbins Avenue, Building 4D, Philadelphia, PA 19111-5094.)

A.2.2.2 Non-Government publications. The following documents form a part of this document to the extent specified herein. Unless otherwise specified, the issues of these documents are those cited in the solicitation or contract.

TELECOMMUNICATIONS INDUSTRY ASSOCIATION (TIA)

TIA-455-20 - Optical Fibres - Part 1-46: Measurement Methods and Test Procedures - Monitoring of. Changes in Optical Transmittance.

(Copies are available from http://www.global.ihs.com or to Global Engineering Documents, 1990 M Street NW, Suite 400, Washington, DC 20036.)

A.2.3 Order of precedence. Unless otherwise noted herein or in the contract, in the event of a conflict between the text of this document and the references cited herein, the text of this document takes precedence. Nothing in this document, however, supersedes applicable laws and regulations unless a specific exemption has been obtained.

A.3 Specimen. The specimen shall be a representative sample of fiber optics cable whose length is at least 150 times the finished outside diameter of the cable. It shall be prepared for testing in accordance with TIA-455-20.

Source: https://assist.dla.mil -- Downloaded: 2016-12-31T21:08Z
Check the source to verify that this is the current version before use.

A.4 Setup.

A.4.1 Bending apparatus The bending apparatus shall be as specified in method 2011 of FED-STD-228 except for the mandrel sizes which shall be specified in the individual specification sheet. The change in optical transmittance measurement shall be substituted for Method 6010, the radiant power measurement. This low temperature flexibility (cold bend) test measurement shall cite: “The change in optical transmittance shall be measured [during and] after the test (from a baseline obtained before each test) in accordance with TIA-455-20 for transmitted power adhering strictly to the setup and test procedure specified in Measurement 2102 from MIL-STD-1678.”

A.4.2 Test mandrels, masses, and clamping method. The test mandrels, masses, and clamping method shall be as shown in figure 5501 A-1 for procedures I and II and in figure 5501 A-2 for procedure III. The clamps shall not damage the specimen. The length of the specimen between the mandrel and the mass shall be sufficient to permit the required number of turns (the masses shall be of values shown in figure 5501 A-2.) or (the masses shall be sufficient to keep specimen taut and to permit bending without handling.)

A.5 Test procedures.

A.5.1 Procedure I.

Step 1 - Unless otherwise specified, the specimen shall be preconditioned for 48 hours at 23°C ± 2°C and 50 percent ±5 percent relative humidity.

Step 2 - Prior to bending the total number of transmitting fibers shall be determined accordance with MIL-STD-1678 part 2 Measurement 2102.

Step 3 - The specimen shall be ”installed on the applicable standard mandrel listed in FED-STD-228, method 2011 and placed in the cold chamber.

Step 4 - Unless otherwise specified, the specimen shall be conditioned for 20 hours. The conditioning temperature and mass shall be as specified in the applicable specification.

Step 5 - At the end of the conditioning period and while at the conditioning temperature the specimen shall be wound at a rate of 2 turns of, the mandrel per minute.

Step 6 - The specimen and mandrel shall be removed, from the conditioning chamber and allowed to return to room temperature. The jacket or outer covering of the specimen shall be visually examined under 10X magnification for cracks or other defects caused by bending.

Step 7 - Within one hour from the removal from the chamber of the specimen, it shall be straightened and removed from the mandrel. The total number of transmitting fibers shall be determined again.

A.5.2 Procedure II.

Step 1 - Unless otherwise specified, the specimen shall be preconditioned for 48 hours at 23°C ± 2°C and50 ± 5 percent relative humidity.

Step 2 - Prior to bending the bending test, change in optical transmittance, Φ_1, of the specimen shall be measured according with TIA-455-20. The change in optical transmittance measurement shall be substituted for Method 6010, the radiant power measurement. This low temperature flexibility (cold bend) measurement shall cite: “The change in optical transmittance shall be measured [during and] after the test (from a baseline obtained before each test) in accordance with TIA-455-20 for transmitted power adhering strictly to the setup and test procedure specified in Measurement 2102 from MIL-STD-1678 part 2.”

Source: https://assist.dla.mil -- Downloaded: 2016-12-31T21:08Z
Check the source to verify that this is the current version before use.

Step 3 - The specimen shall be removed from the measurement apparatus, installed on theapplicable standard mandrel listed in FED-STD-228, method 2011 and placed in the cold chamber.

Step 4 - Unless otherwise specified, the specimen shall be conditioned for 20 hours. The conditioning temperature and mass shall be as specified in the specification sheet.

Step 5 - At the end of the conditioning period and while at the conditioning temperature the entire specimen shall be wound at a rate of 2 turns of the mandrel per minute.

Step 6 - The specimen and mandrel shall be allowed to return to room temperature. The jacket or outer covering of the specimen shall be visually examined under 10x magnification for cracks or other defects caused by bending.

Step 7 - Within one hour after reaching room temperature the specimen shall be straightened and removed from the mandrel. The change in optical transmittance, Φ_1, of the specimen shall then be measured in accordance with TIA-455-20. The change in optical transmittance measurement shall be substituted for Method 6010, the radiant power measurement. This low temperature flexibility (cold bend) measurement shall cite: "The change in optical transmittance shall be measured [during and] after the test (from a baseline obtained before each test) in accordance with TIA-455-20 for transmitted power adhering strictly to the setup and test procedure specified in Measurement 2102 from MIL-STD-1678 part 2."

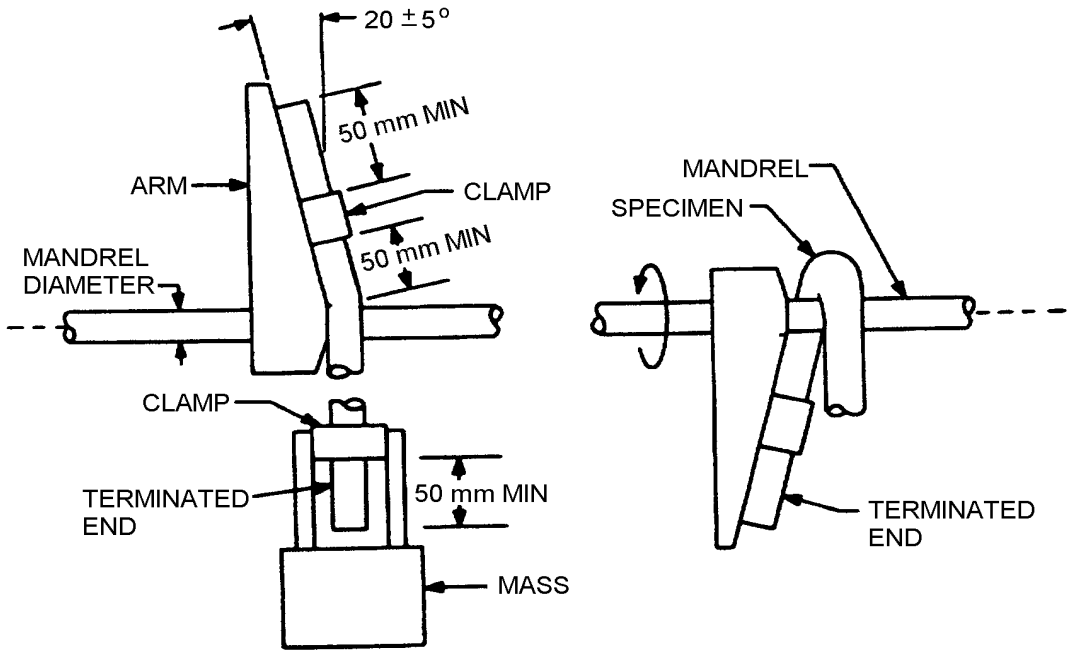

FIGURE 5501 A-1. Test mandrels and mass (Procedures I and II).

Source: https://assist.dla.mil -- Downloaded: 2016-12-31T21:08Z
Check the source to verify that this is the current version before use.

A.5.3 Procedure III.

Step 1 – Unless otherwise specified, the specimen shall be preconditioned for 48 hours at 23°C ±2°C and50 ±5 percent relative humidity.

Step 2 – Prior to bending the change in optical transmittance, Φ_1 of the specimen shall be measured in accordance with TIA-455-20. The change in optical transmittance measurement shall be substituted for Method 6010, the radiant power measurement. This low temperature flexibility (cold bend) test measurement shall cite: "The change in optical transmittance shall be measured [during and] after the test (from a baseline obtained before each test) in accordance with TIA-455-20 for transmitted power adhering strictly to the setup and test procedure specified in Measurement 2102 from MIL-STD-1678 part 2."

Step 3 – With the specimen connected to the power measurement apparatus, the cable shall be installed on the applicable mandrel and placed in the cold chamber. The specimen shall be clamped to the mandrel at two points adequately separated and a loop provided to avoid bending losses (see figure 5501 A-2). Specimen length outside the chamber will be kept to a minimum.

Step 4 – In order to verify that the looping and clamping procedure does not cause excess loss, the change in optical transmittance, Φ_1, shall be measured before and after installation on the mandrel.

Step 5 - Unless otherwise specified, the specimen shall be conditioned for 20 hours. The conditioning temperature and mass shall be as specified in the specification sheet.

Step 6 – At the end of the conditioning period and while at the conditioning temperature the entire specimen shall be wound at a rate of 2 turns of the mandrel per minute. The total number of turns shall be determined by the specification sheet.

Step 7 – The specimen and mandrel shall be allowed to return to room temperature. The jacket or outer covering of the specimen shall be visually examined under 10x magnification for cracks or other defects caused by bending.

Step 8 – Within one hour after reaching room temperature the specimen shall be straightened and removed from the mandrel. The change in optical transmittance, Φ_2, of the specimen shall then be measured accordance with TIA-455-20. The change in optical transmittance measurement shall be substituted for Method 6010, the radiant power measurement. This low temperature flexibility (cold bend) test measurement shall cite: "The change in optical transmittance shall be measured [during and] after the test (from a baseline obtained before each test) in accordance with TIA-455-20 for transmitted power adhering strictly to the setup and test procedure specified in Measurement 2102 from MIL-STD-1678 part 2."

Source: https://assist.dla.mil -- Downloaded: 2016-12-31T21:08Z
Check the source to verify that this is the current version before use.

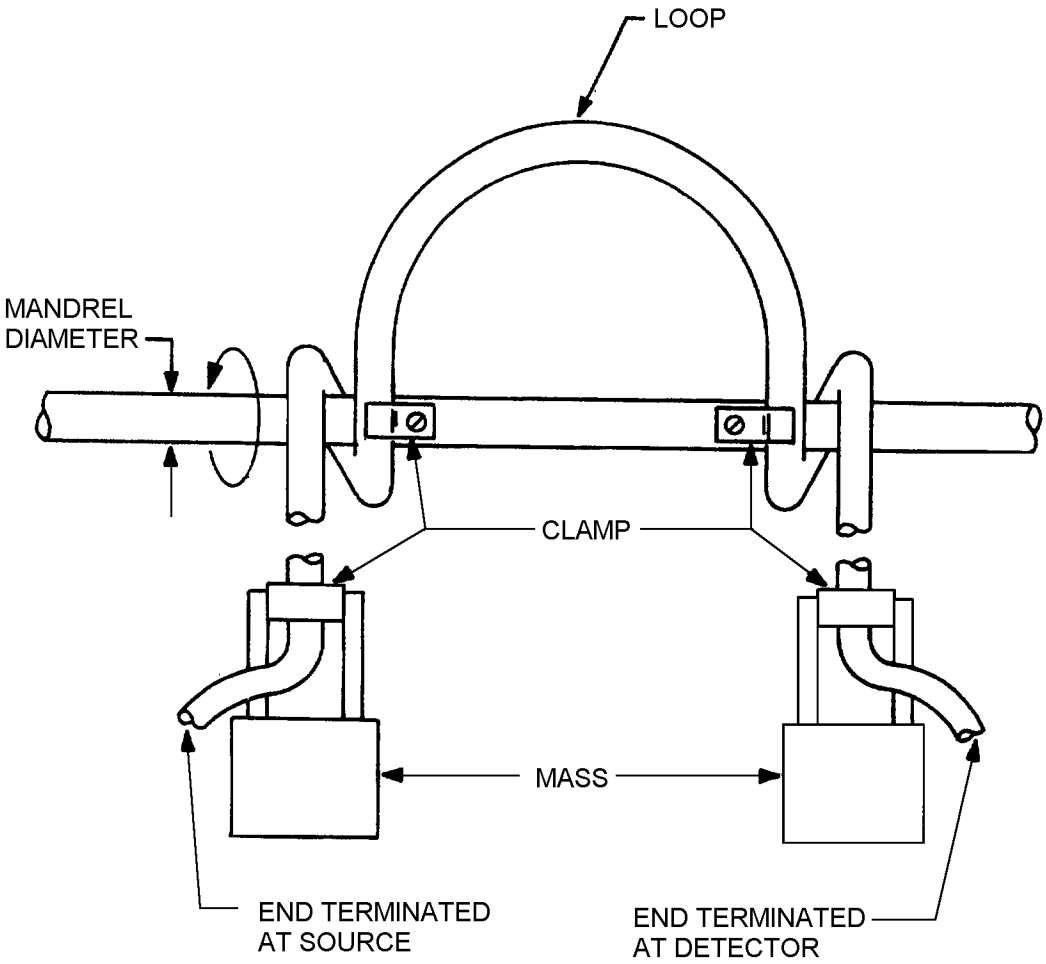

Cable nominal diameter (mm)	Test mass (kg)
2.5 and less	5
2.6 to 6.4	10
6.5 to 12.7	12.5
14.0 to 15.0	15
15.3 to 17.8	17.5
18.0 to 20.0	20
20.3 to 22.8	22.5
22.9 and over	25

FIGURE 5501 A-2. Test mandrels and mass (Procedure III).

Source: https://assist.dla.mil -- Downloaded: 2016-12-31T21:08Z
Check the source to verify that this is the current version before use.

A.5.4 Results. The following details shall be specified in the equipment specification:

a. Procedure number.

b. Pre test data required.

c. Failure criteria.

d. The percentage, P_N, of the fibers broken in the bending test (Procedure I) shall be reported and calculated from:

$$P_N = \frac{N_1 - N_2}{N_1} \times 100$$

e. The diameter of the mandrel and the mass (Procedure I).

f. Any cracking or splitting of the insulation (Procedure I).

g. The ratio (Procedure II and III) of output power, R, shall be reported and calculated from:

$$\mathrm{R} = \frac{\Phi_1}{\Phi_2}$$

Where Φ_1 is the change in optical transmittance before bending and Φ_2 is the change in optical transmittance after bending.

h. The length of the specimen (Procedure II and III).

i. The diameter of the mandrel and the mass (Procedure II and III).

j. Any cracking or splitting of the insulation (Procedure II and III).

k. The total number of turns on the mandrel.

Source: https://assist.dla.mil -- Downloaded: 2016-12-31T21:08Z
Check the source to verify that this is the current version before use.

POWER TRANSMISSION VERSUS TEMPERATURE

1. Purpose. A legacy measurement, listed as method 4010 in DOD-STD-1678, is provided as appendix A to this measurement since method 4010 is referenced in several military specifications and commercial standards. To aid in expediting the replacement of method 4010 with a commercial standard and more updated test process, this test process is provided. This updated process is the one being used in fiber optic component military specifications. The placement of this updated variation in Measurement 5502 is a means to standardize how this measurement is performed. To minimize test variations and to permit more accurate comparison of test results from multiple sources, a "standardized" approach is specified. Method 4010 is provided in appendix A.

2. APPLICABLE DOCUMENTS

2.1 General. The documents listed in this section are specified in sections 3, 4, and 5 of this standard practice. This section does not include documents cited in other sections of this standard practice or recommended for additional information or as examples. While every effort has been made to ensure the completeness of this list, document users are cautioned that they must meet all specified requirements of documents cited in sections 3, 4, and 5 of this standard practice, whether or not they are listed.

2.2 Government documents.

2.2.1 Specifications, standards, and handbooks. The following specifications, standards, and handbooks form a part of this document to the extent specified herein. Unless otherwise specified, the issues of these documents are those cited in the solicitation or contract.

DEPARTMENT OF DEFENSE SPECIFICATIONS

MIL-STD-2042 - Fiber Optic Cable Topology Installation, Standard Methods for Naval Ships, Parts 1 to 6.

(Copies of these documents are available online at http://quicksearch.dla.mil/ or from the Standardization Document Order Desk, 700 Robbins Avenue, Building 4D, Philadelphia, PA 19111-5094.)

2.2.2 Other Government documents, drawings, and publications. The following other Government documents, drawings, and publications form a part of this standard practice to the extent specified herein. Unless otherwise specified, the issues are these documents are those cited in the solicitation or contract.

NAVAIR 01-1A-505-4/T.O. 1-1A-14-4/ TM 1-1500-232-24-4- Installation and Testing Practices, Aircraft Fiber Optic Cabling.

(A copy of this document is available online at: https://mynatec.navair.navy.mil. NATEC has three different processes to obtain the manual, depending on if you are Government personnel (military and civilians), Contractors with a Government contract, or everyone else. If unable to access this Web Site or require further assistance, contact (1) NATEC Customer Service: 619.545.1888, (2) NATEC Website Status Hotline: 619.545.1706, or (3) NATEC Customer Service E-mail: nani_customerservice@navy.mil.)

Source: https://assist.dla.mil -- Downloaded: 2016-12-31T21:08Z
Check the source to verify that this is the current version before use.

2.2.3 Non-Government publications. The following documents form a part of this document to the extent specified herein. Unless otherwise specified, the issues of these documents are those cited in the solicitation or contract.

TELECOMMUNICATIONS INDUSTRY ASSOCIATION (TIA)

TIA-455-3	-	Procedure to Measure Temperature Cycling Effects on Optical Fibers, Optical Cable, and Other Passive Fiber Optic Components.
TIA/EIA-455-4	-	Fiber Optic Component Temperature Life Test.
TIA-455-13	-	Visual and Mechanical Inspection of Fiber Optic Components, Devices, and Assemblies.
TIA-455-20	-	Optical Fibres - Part 1-46: Measurement Methods and Test Procedures – Monitoring of Changes in Optical Transmittance.
TIA-455-57	-	Preparation and Examination of Optical Fiber Endface for Testing Purposes.

(Copies are available from http://www.global.ihs.com or from Global Engineering Documents, 1990 M Street NW, Suite 400, Washington, DC 20036.)

2.3 Order of precedence. Unless otherwise noted herein or in the contract, in the event of a conflict between the text of this document and the references cited herein, the text of this document takes precedence. Nothing in this document, however, supersedes applicable laws and regulations unless a specific exemption has been obtained.

3. Tailoring of test from Method 4010. Recommend that the soak at elevated temperature in accordance with TIA/EIA-455-4 (see 4.1) or the temperature cycling in accordance with TIA-455-3 (see 4.2) be performed in lieu of Method 4010. In Method 4010, the DUT is exposed to the elevated temperature for the duration of only 4 hours before the optical measurement is performed. In contrast, TIA/EIA-455-4 is performed to determine the optical and mechanical effects of the Device Under Test (DUT) when exposed to an elevated temperature for a specified duration. This longer duration is preferred since the optical performance is monitored for an extended period to simulate the life of the DUT. Performance of the test as listed in paragraph 4 below is recommended; however, the test can be tailored. This tailored test may cite an alternative elevated temperature, a 4 hour soak at the elevated temperature prior to the performing an optical measurement, and completion of the test upon completion of the optical measurement.

4. Test procedure.

4.1 Soak at elevated temperature (intent of test). DUT shall be tested in accordance with TIA/EIA-455-4. The specimens shall be exposed to dry air at the specified elevated temperature for the specified duration. The change in optical transmittance shall be monitored after the test in accordance with Measurement 2102 in Part 2 of this Standard Practice. The DUT shall be visually examined in accordance with TIA-455-13 after the test.

4.2 Temperature cycling (expansion on intent of test). DUT shall be tested in accordance with TIA-455-3 using the test condition schedule and soak times specified. (See table A and table B in TIA-455-3 or specify otherwise as applicable. An alternative is to list a table for the temperature cycle with the durations and temperatures of ramp rates and soaks/plateaus.) The change in optical transmittance shall be measured during and after the test in accordance with Measurement 2102 in Part 2 of this Standard Practice. The DUT shall be visually examined in accordance with TIA-455-13 after the test.

4.3 Substitution for measurement support processes cited in Method 4010.

4.3.1 Number of transmitting fibers, Method 1040. This support process is performed only if it is required by the specification sheet. Method 1040 shall not be performed and no substitute support process is specified. The change in optical transmittance measurement (see 4.3.2) is considered to be a more quantitative means to determine the same information. Method 1040 consists of illuminating one cabling (fiber bundle) end with white light. The other cabling end is photographed and the light intensity of each fiber compared.

Source: https://assist.dla.mil -- Downloaded: 2016-12-31T21:08Z
Check the source to verify that this is the current version before use.

4.3.2 Radiant power measurement, Method 6010. The change in optical transmittance measurement shall be substituted for Method 6010, the radiant power measurement. This temperature test measurement shall cite: “The change in optical transmittance shall be measured [during and] after the test (from a baseline obtained before each test) in accordance with TIA-455-20 for transmitted power adhering strictly to the setup and test procedure specified in Measurement 2102 from MIL-STD-1678.”

4.3.3 Fiber and bundle end preparation, Method 8040. In lieu of Method 8040, cable preparation and fiber termination shall be performed in accordance with the applicable installation or maintenance document, such as MIL-STD-2042 Part 5 or NAVAIR 01-1A-505-4/T.O. 1-1A-14-4/TM 1-1500-232-24-4. Examination of cleaved end faces shall be performed to TIA-455-57. Examination of ferrule end faces for imperfections shall be performed in accordance with the applicable installation or maintenance document, such as MIL-STD-2042 Part 5 or NAVAIR 01-1A-505-4/T.O. 1-1A-14-4/TM 1-1500-232-24-4. Inspection of a polished ferrule end face for proper end face geometry shall be performed in accordance with Measurement 5201 herein.

Source: https://assist.dla.mil -- Downloaded: 2016-12-31T21:08Z
Check the source to verify that this is the current version before use.

APPENDIX A

METHOD 4010

POWER TRANSMISSION VERSUS TEMPERATURE

A.1. Purpose. This appendix provides Method 4010 as formerly specified in DOD-STD-1678.

A.2. APPLICABLE DOCUMENTS

A.2.1 General. The documents listed in this section are specified in sections 3, 4, and 5 of this standard practice. This section does not include documents cited in other sections of this standard practice or recommended for additional information or as examples. While every effort has been made to ensure the completeness of this list, document users are cautioned that they must meet all specified requirements of documents cited in sections 3, 4, and 5 of this standard practice, whether or not they are listed.

A.2.2 Government documents.

A.2.2.1 Specifications, standards, and handbooks. The following specifications, standards, and handbooks form a part of this document to the extent specified herein. Unless otherwise specified, the issues of these documents are those cited in the solicitation or contract.

DEPARTMENT OF DEFENSE SPECIFICATION

MIL-STD-2042 - Fiber Optic Cable Topology Installation, Standard Methods for Naval Ships, Parts 1 to 6.

(Copies of this document are available online at http://quicksearch.dla.mil/ or from the Standardization Document Order Desk, 700 Robbins Avenue, Building 4D, Philadelphia, PA 19111-5094.)

A.2.2.2 Other Government documents, drawings, and publications. The following other Government documents, drawings, and publications form a part of this standard practice to the extent specified herein. Unless otherwise specified, the issues are these documents are those cited in the solicitation or contract.

NAVAIR 01-1A-505-4/T.O. 1-1A-14-4/ TM 1-1500-232-24-4- Installation and Testing Practices, Aircraft Fiber Optic Cabling.

(A copy of this document is available online at: https://mynatec.navair.navy.mil. NATEC has three difference processes to obtain the manual, depending on if you are Government personnel (military and civilians), Contractors with a Government contract, or everyone else. If unable to access this Web Site or require further assistance, contact (1) NATEC Customer Service: 619.545.1888, (2) NATEC Website Status Hotline: 619.545.1706, or (3) NATEC Customer Service E-mail: nani_customerservice@navy.mil.)

A.2.3 Order of precedence. Unless otherwise noted herein or in the contract, in the event of a conflict between the text of this document and the references cited herein, the text of this document takes precedence. Nothing in this document, however, supersedes applicable laws and regulations unless a specific exemption has been obtained.

A.3 Scope. This method describes a procedure for determining the effect of the temperature upon the transmitted power of a fiber optics cable. The temperature effect on transmitted power is defined as:

$$R = \frac{\phi_2}{\phi_1}$$

Where Φ_2 is the radiant power at temperature T_2 and Φ_1 is the radiant power at T_1 (Note: $T_2 > T$,). Unless otherwise specified T_1=25 C.

Source: https://assist.dla.mil -- Downloaded: 2016-12-31T21:08Z
Check the source to verify that this is the current version before use.

A.4. APPARATUS.

A.4.1 The apparatus shall be as specified herein and in the change in optical transmittance measurement TIA-455-20 shall be substituted for Method 6010, the radiant power measurement. This power transmission versus temperature test measurement shall cite: "The change in optical transmittance shall be measured [during and] after the test (from a baseline obtained before each test) in accordance with TIA-455-20 for transmitted power adhering strictly to the setup and test procedure specified in Measurement 2102 from MIL-STD-1678 part 2."

A.4.2 Chamber. The volume of the test chamber shall be of sufficient size so that the specimen within it will not interfere with the generation and maintenance of the test conditions. The heat source shall be located so that the radiant heat will not fall directly on the specimen. Unless otherwise specified, thermocouples or equivalent temperature sensors shall be used to determine the temperature within the chamber and to control the chamber temperature.

A.5. PROCEDURE.

Step 1 - The output of the source shall be adjusted to the center wavelength, bandwidth and intensity of interest.

Step 2 – In lieu of Method 8040 of DOD-STD-1678, both ends of a long length of the specimen shall either be prepared in accordance with the applicable installation or maintenance document, such as MIL-STD-2042 Part 5 or NAVAIR 01-1A-505-4/T.O. 1-1A-14-4/TM 1-1500-232-24-4 and polished so that the end faces are perpendicular to the axis of the specimen, or index matching fluid shall be used to couple the optical power between source and specimen and specimen and detector. Examination of cleaved end faces shall be performed to TIA-455-57. The total length (L_4) of the specimen shall be determined.

Step 3 – The specimen shall be placed in the test chamber as shown in figure 5502 A-1. Unless otherwise specified, the length of the specimen shall be loosely coiled and the diameter of the coil shall be no less than 300 mm (11.8 inches). The coil shall be supported in such a manner as to facilitate free movement of air through it. The length, L_2, within the chamber shall be determined. The lengths outside the chamber, (L_1 and L_3) shall be as short as practical.

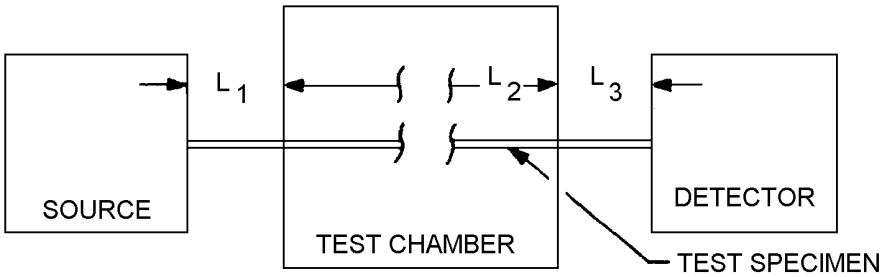

FIGURE 5502 A-1. Test chamber.

Step 4 – One end of the specimen shall be placed in the specified radiation beam so that the entire end is uniformly illuminated with the launch cone specified in the specification sheet.

Step 5 – The other end shall be placed so that the axis of the output cone of radiation is perpendicularly incident on the detector and all of the radiation impinges on the detector. If an integrating sphere is used, the end shall be placed within the sphere.

Step 6 - A cladding mode stripper, if used, shall be applied to the fiber(s) in the specimen.

Source: https://assist.dla.mil -- Downloaded: 2016-12-31T21:08Z
Check the source to verify that this is the current version before use.

Step 7 - With the specimen and test chamber at room ambient conditions measure the temperature, T_1, of the specimen.

Step 8 - The change in optical transmittance, Φ_1, shall be measured in accordance with TIA-455-20 for transmitted power adhering strictly to the setup and test procedure specified in measurement 2102 from MIL-STD-1678 part 2 at the specified wavelength(s). If required by the specification sheet, the number of transmitting fibers shall be determined by change in optical transmittance measurement TIA-455-20. Method 1040 shall not be performed and no substitute support process is specified. The change in optical transmittance measurement TIA-455-20 is considered to be a more quantitative means to determine the same information. Method 1040 consists of illuminating one cabling (fiber bundle) end with white light. The other cabling end is photographed and the light intensity of each fiber compared.

Step 9 - The temperature of the chamber (and specimen) shall be raised to the temperature specified in the specification sheet. Unless otherwise specified, the specimen shall be conditioned for 4 hours. At the end of the conditioning period the temperature, T_2, shall be measured.

Step 10 - While still within the chamber and at temperature T_2, the change in optical transmittance, Φ_2, shall be measured in accordance with TIA-455-20 for transmitted power adhering strictly to the setup and test procedure specified in measurement 2102 from MIL-STD-1678 part 2 at the specified wavelength(s). If required by the specification sheet, the number of transmitting fibers shall be determined by the change in optical transmittance measurement TIA-455-20. Method 1040 shall not be performed and no substitute support process is specified. The change in optical transmittance measurement TIA-455-20 is considered to be a more quantitative means to determine the same information. Method 1040 consists of illuminating one cabling (fiber bundle) end with white light. The other cabling end is photographed and the light intensity of each fiber compared.

Step 11 - The ratio of transmitted power, R, shall be calculated according to the formula in A.3 for each of the wavelengths and temperatures specified.

A.6. RESULTS. The following details shall be as specified in the equipment specification:

a. Procedure number.
b. Pre test data required.
c. Failure criteria.
d. The ratio, wavelength(s) and temperature(s) where the transmitted power was measured.
e. The radiation source, center wavelength(s), band pass at the wavelength(s) and numerical aperture of the launched radiation cone.
f. The total length of the specimen, L_4, and the length of the specimen in the conditioning chamber, L_z.
g. The number of transmitting fibers before and after heat conditioning if required.
h. The identity and refractive index at the wavelength(s) of interest of index matching fluids, if used.
i. The type of cladding mode stripper, if used.
j. The type, size and responsivity of the detector at the wavelength(s) of interest.

MEASUREMENT 5502

Source: https://assist.dla.mil -- Downloaded: 2016-12-31T21:08Z
Check the source to verify that this is the current version before use.

POWER TRANSMISSION VS. HUMIDITY

1. Purpose. A legacy measurement, listed as method 4030 in DOD-STD-1678, is provided as an appendix to this measurement since Method 4030 is referenced in several military specifications and commercial standards. To aid in expediting the replacement of method 4030 with a commercial standard and more updated test process, this test process is provided. This updated process is the one being used in fiber optic component military specifications. The placement of this updated variation in Measurement 5503 is a means to standardize how this measurement is performed. To minimize test variations and to permit more accurate comparison of test results from multiple sources, a "standardized" approach is specified. Method 4030 is provided in appendix A.

2. APPLICABLE DOCUMENTS

2.1 General. The documents listed in this section are specified in sections 3, 4, and 5 of this standard practice. This section does not include documents cited in other sections of this standard practice or recommended for additional information or as examples. While every effort has been made to ensure the completeness of this list, document users are cautioned that they must meet all specified requirements of documents cited in sections 3, 4, and 5 of this standard practice, whether or not they are listed.

2.2 Government documents.

2.2.1 Specifications, standards, and handbooks. The following specifications, standards, and handbooks form a part of this document to the extent specified herein. Unless otherwise specified, the issues of these documents are those cited in the solicitation or contract.

DEPARTMENT OF DEFENSE STANDARDS

MIL-STD-202	-	Electronic and Electrical Component Parts.
MIL-STD-2042	-	Fiber Optic Cable Topology Installation, Standard Methods for Naval Ships, Parts 1 to 6.

(Copies of these documents are available online at http://quicksearch.dla.mil/or from the Standardization Document Order Desk, 700 Robbins Avenue, Building 4D, Philadelphia, PA 19111-5094.)

2.2.2 Other Government documents, drawings, and publications. The following other Government documents, drawings, and publications form a part of this standard practice to the extent specified herein. Unless otherwise specified, the issues are these documents are those cited in the solicitation or contract.

NAVAIR 01-1A-505-4/T.O. 1-1A-14-4/ TM 1-1500-232-24-4-	Installation and Testing Practices, Aircraft Fiber Optic Cabling.

(A copy of this document is available online at: https://mynatec.navair.navy.mil. NATEC has three different processes to obtain the manual, depending on if you are Government personnel (military and civilians), Contractors with a Government contract, or everyone else. If unable to access this Web Site or require further assistance, contact (1) NATEC Customer Service: 619.545.1888, (2) NATEC Website Status Hotline: 619.545.1706, or (3) NATEC Customer Service E-mail: nani_customerservice@navy.mil.)

Source: https://assist.dla.mil -- Downloaded: 2016-12-31T21:08Z
Check the source to verify that this is the current version before use.

2.2.3 Non-Government publications. The following documents form a part of this document to the extent specified herein. Unless otherwise specified, the issues of these documents are those cited in the solicitation or contract.

TELECOMMUNICATIONS INDUSTRY ASSOCIATION (TIA)

TIA/EIA-455-5	-	Humidity Test Procedure for Fiber Optic Components.
TIA-455-13	-	Visual and Mechanical Inspection of Fiber Optic Components, Devices, and Assemblies.
TIA-455-20	-	Optical Fibres – Part 1-46: Measurement Methods and Test Procedures – Monitoring of Changes in Optical Transmittance.
TIA-455-57	-	Preparation and Examination of Optical Fiber Endface for Testing Purposes.

(Copies are available from http://www.global.ihs.com or to Global Engineering Documents, 1990 M Street NW, Suite 400, Washington, DC 20036.)

2.3 Order of precedence. Unless otherwise noted herein or in the contract, in the event of a conflict between the text of this document and the references cited herein, the text of this document takes precedence. Nothing in this document, however, supersedes applicable laws and regulations unless a specific exemption has been obtained.

3. Tailoring of test from method 4030. Recommend that the temperature humidity cycling in accordance with TIA/EIA-455-5 as stated in paragraph 4 below be performed in lieu of method 4020. The moisture resistance conditioning in accordance with method 106 of MIL-STD-202 without vibration (cited in method 4030) is the same test as the temperature humidity cycling in accordance with Method B of TIA/EIA-455-5. In method 4030, the radiant power measurement is performed before and after the test. The change in optical transmittance shall be performed in lieu of the radiant power measurement (see 4.2.2).

4. Test procedure.

4.1 Perform in accordance with TIA/EIA-455-5. DUT shall be tested in accordance with method B of TIA/EIA-455-5. The subcycle shall be included in the testing. The change in optical transmittance shall be measured during and after the test (from a baseline obtained before each test) in accordance with TIA-455-20 for transmitted power adhering strictly to the setup and test procedure specified in Measurement 2102 from Part 2 of this standard. The DUT shall be visually examined in accordance with TIA-455-13 after the test.

4.2 Substitution for measurement support processes cited in method 4010.

4.2.1 Number of transmitting fibers, method 1040. This support process is performed only if it is required by the specification sheet. Method 1040 shall not be performed and no substitute support process is specified. The change in optical transmittance measurement (see 4.2.2) is considered to be a more quantitative means to determine the same information. Method 1040 consists of illuminating one cabling (fiber bundle) end with white light. The other cabling end is photographed and the light intensity of each fiber compared.

4.2.2 Radiant power measurement, method 6010. The change in optical transmittance measurement shall be substituted for Method 6010, the radiant power measurement. This temperature test measurement shall cite: “The change in optical transmittance shall be measured during and after the test (from a baseline obtained before each test) in accordance with TIA-455-20 for transmitted power adhering strictly to the setup and test procedure specified in Measurement 2102 from MIL-STD-1678 part 2.”

4.2.3 Fiber and bundle end preparation, method 8040. In lieu of Method 8010, cable preparation and fiber termination shall be performed in accordance with the applicable installation or maintenance document, such as MIL-STD-2042 Part 5 or NAVAIR 01-1A-505-4/T.O. 1-1A-14-4/TM 1-1500-232-24-4. Examination of cleaved end faces shall be performed to TIA-455-57. Examination of ferrule end faces for imperfections shall be performed in accordance with the applicable installation or maintenance document, such as MIL-STD-2042, Part 5 or NAVAIR 01-1A-505-4/T.O. 1-1A-14-4/TM 1-1500-232-24-4. Inspection of a polished ferrule end face for proper end face geometry shall be performed in accordance with Measurement 5201 of MIL-STD-1678 part 5.

Source: https://assist.dla.mil -- Downloaded: 2016-12-31T21:08Z
Check the source to verify that this is the current version before use.

APPENDIX A

METHOD 4030: POWER TRANSMISSION VERSUS HUMIDITY

A.1. Purpose. This appendix provides Method 4030 as formerly specified in DOD-STD-1678.

A.2 Scope. This method describes a procedure for determining the effect of the humidity upon the transmitted power of a fiber or bundle. The humidity effect on transmitted power is defined as:

$$R = \frac{\phi_2}{\phi_1}$$

Where Φ_2 is the change in optical transmittance at the final condition measured in accordance with TIA-455-20. Provisions are made for continuously monitoring transmitted power.

A.3. TEST.

A.3.1 Specimen. The specimen shall be taken from a representative sample of fiber optics cable.

A.3.2 Apparatus. The apparatus shall be as specified herein and in TIA-455-20. The change in optical transmittance measurement shall be substituted for Method 6010, the radiant power measurement. This power transmission versus humidity test measurement shall cite: “The change in optical transmittance shall be measured [during and] after the test (from a baseline obtained before each test) in accordance with TIA-455-20 for transmitted power adhering strictly to the setup and test procedure specified in Measurement 2102 from MIL-STD-1678 part 2.”

A.3.3 Chamber. The volume of the test chamber shall be such that the specimen will not interfere with the generation and maintenance of the test conditions. The heat source of the test chamber shall be so located that radiant heat will not fall directly on the specimen. The chamber shall be constructed so that condensation which may occur on the inside walls of the chamber will not drop or flow onto the specimen.

A.3.4 Test procedure.

Step 1 - The output of the source shall be adjusted to the center wavelength, bandwidth and intensity of interest.

Step 2 - In lieu of Method 8040 of DOD-STD-1678, both ends of a long length of the specimen shall either be prepared in accordance with the applicable installation or maintenance document, such as MIL-STD-2042 Part 5 or NAVAIR 01-1A-505-4/T.O. 1-1A-14-4/TM 1-1500-232-24-4 and polished so that the end faces are perpendicular to the axis of the specimen, or index matching fluid shall be used to couple the optical power between source and specimen and specimen and detector. Examination of cleaved end faces shall be performed to TIA-455-57. The total length (L_4) of the specimen shall be determined.

Step 3 - The specimen shall be placed within the test chamber as shown in figure 5503 A-1 and pre-conditioned at 25 °C± 2°C and 50 percent ± 5 percent R.H. for 48 hours. Unless otherwise specified, the length of specimen inside the chamber shall be loosely coiled and the diameter of the coil shall be no less than 300 mm (11.8 inches). The coil shall be supported in such a manner as to facilitate free movement of air through it. The length, L_2, within the chamber shall be determined. The lengths, L_1 and L_3, outside the chamber shall be as short as practical.

Source: https://assist.dla.mil -- Downloaded: 2016-12-31T21:08Z
Check the source to verify that this is the current version before use.

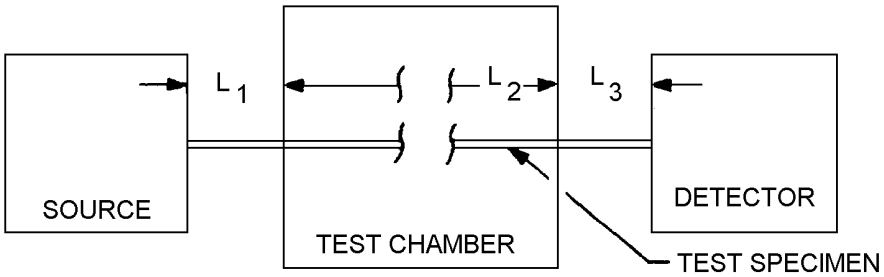

FIGURE 5503 A-1. Test chamber.

Step 4 - One end of the specimen shall be placed in the specified radiation beam so that the entire end is uniformly illuminated with the launch cone specified in the specification sheet.

Step 5 - The other end shall be placed so that the axis of the output cone of radiation is perpendicularly incident on the detector and all of the radiation impinges on the detector. If an integrating sphere is used, the end shall be placed within the sphere.

Step 6 - A cladding mode stripper, if used, shall be applied to the fiber(s) in the specimen.

Step 7 - At the end of the pre conditioning period the change in optical transmittance, Φ_1, shall be measured in accordance with TIA-455-20 at the specified wavelengths.

Step 8 - Without removing the specimen, it shall be subjected to moisture resistance conditioning according to method 106 of MIL-STD-202 except that the specimen shall not be vibrated.

Step 9 - At the end of the 10th cycle and while still at 25°C and 95 percent R.H. the change in optical transmittance, Φ_2, shall be measured. When specified, the transmitted power shall be continuously recorded throughout the 10 cycles and during an additional post conditioning of 48 hours at 50 percent R.H. If required by the specification sheet, the number of transmitting fibers shall be determined by the change in optical transmittance measurement, TIA-455-20. This is considered to be a more quantitative means to determine the same information. Method 1040 consists of illuminating one cabling (fiber bundle) end with white light. The other cabling end is photographed and the light intensity of each fiber compared.

Step 10 - The ratio of transmitted power, R, shall be calculated according to the formula in section 1 for each of the wavelengths specified.

A.4. RESULTS. The following details shall be as specified in the equipment specification:

a. Procedure number.
b. Pre test data required.
c. Failure criteria.
d. The ratio of the transmitted power, R, and wavelength(s) where the transmitted power was measured.
e. The radiation source, center wavelength(s), band pass at the wavelength(s) and numerical aperture of the launched radiation cone.

MEASUREMENT 5503

Source: https://assist.dla.mil -- Downloaded: 2016-12-31T21:08Z
Check the source to verify that this is the current version before use.

f. The total length of the specimen, L_4, and the length of the specimen in the conditioning chamber, L_2.
g. The identity and refractive index at the wavelength(s) of interest of index matching fluids, if used.
h. The type of cladding mode stripper, if used.
i. The type, size and responsivity of the detector at the wavelength(s) of interest.
j. If required, the minimum ratio of transmitted power, R min, shall be reported according to:

$$R\ \min = \frac{\phi\ \min}{\phi_1}$$

Where Φ min is the minimum value of optical power (change in optical transmittance) observed during continuous monitoring.

k. The relative humidity and temperature where Φ min was observed.

Source: https://assist.dla.mil -- Downloaded: 2016-12-31T21:08Z
Check the source to verify that this is the current version before use.

FREEZING WATER IMMERSION - ICE CRUSH

1. Purpose. A legacy measurement, listed as method 4050 in DOD-STD-1678, is provided as an appendix to this measurement since Method 4050 is referenced in several military specifications and commercial standards. To aid in expediting the replacement of method 4050 with a commercial standard and more updated test process, this test process is provided. This updated process is the one being used in fiber optic component military specifications. The placement of this updated variation in Measurement 5504 is a means to standardize how this measurement is performed. To minimize test variations and to permit more accurate comparison of test results from multiple sources, a "standardized" approach is specified. Method 4050 is provided in appendix A.

2. APPLICABLE DOCUMENTS

2.1 General. The documents listed in this section are specified in sections 3, 4, and 5 of this standard practice. This section does not include documents cited in other sections of this standard practice or recommended for additional information or as examples. While every effort has been made to ensure the completeness of this list, document users are cautioned that they must meet all specified requirements of documents cited in sections 3, 4, and 5 of this standard practice, whether or not they are listed.

2.2 Non-Government publications. The following documents form a part of this document to the extent specified herein. Unless otherwise specified, the issues of these documents are those cited in the solicitation or contract.

TELECOMMUNICATIONS INDUSTRY ASSOCIATION (TIA)

TIA-455-13	-	Visual and Mechanical Inspection of Fiber Optic Components, Devices, and Assemblies.
TIA-455-20	-	Optical Fibres - Part 1-46: Measurement Methods and Test Procedures - Monitoring of Changes in Optical Transmittance.
EIA/TIA-455-98	-	Fiber Optic Cable External Freezing Test.

(Copies are available from http://www.global.ihs.com or to Global Engineering Documents, 1990 M Street NW, Suite 400, Washington, DC 20036.)

2.3 Order of precedence. Unless otherwise noted herein or in the contract, in the event of a conflict between the text of this document and the references cited herein, the text of this document takes precedence. Nothing in this document, however, supersedes applicable laws and regulations unless a specific exemption has been obtained.

3. Tailoring of test from method 4050. Recommend that the freezing water immersion in accordance with EIA/TIA-455-98 as stated in paragraph 4 below to be performed in lieu of method 4050. The EIA/TIA-455-98 test may be conducted to simulate either the icing effect of immersion or the crushing effect of ice as detailed in 3.1 and 3.2. In Method 4030, the radiant power measurement is performed before and after the test. The change in optical transmittance shall be performed in lieu of the radiant power measurement (see 4.6.1).

3.1 Simulate icing effect of immersion. This test simulates water pooling to full immersion of the DUT then freezing. This is the method to standardize the testing of fiber optic cabling components. The test cited in paragraph 4 is based on this type of simulation.

3.2 Simulate crush effect of ice. This test simulates water fully filling a confined and sealed space then freezing. The confinement results in an expanding and crushing effect on the DUT once the water freezes. Method 4050 is a test to simulate this crush effect of ice. Method 4030 is essentially the same test as the simulated crush effect of ice in accordance with method B, procedure 1 of EIA/TIA-455-98. Paragraph 4 should be tailored to cite method B in lieu of method A if the intent is to simulate the crush effect when the DUT is in a confined and sealed space.

Source: https://assist.dla.mil -- Downloaded: 2016-12-31T21:08Z
Check the source to verify that this is the current version before use.

4. Test procedure. DUT shall be tested in accordance with method A, procedure 1 of EIA/TIA-455-98. The change in optical transmittance shall be measured during and after the test (from a baseline obtained before each test) in accordance with TIA-455-20 for transmitted power adhering strictly to the setup and test procedure specified in Measurement 2102 from MIL-STD-1678 part 2. The DUT shall be visually examined in accordance with TIA-455-13 after the test.

4.1 Cable as the DUT. Cable shall be loosely coiled in the water vessel. The size of the water vessel shall allow for a loosely coiled cable that is not in violation of the minimum bend diameter and that comes into contact only with the vessel floor.

4.2 Connector as the DUT. The size of the water vessel shall be such that, when the mated connectors are placed in the center of the vessel, the mated connectors are within 150 mm of the sides, top, and bottom.

4.3 General DUT placement. Place each DUT assembly in a separate vessel so that it is within 150 mm of sides, water line and bottom. Keep evenly spaced, top-to-bottom and on both sides, so don't get a differential pressure from the ice. Keep within 150 mm (5.9 inches) of the wall so don't get a higher pressure from the ice. Axial direction (front and back) can be sufficiently long to allow cables to protrude from top of vessel (Center DUT in vessel in the axial direction).

4.4 Use and placement of a temperature sensor. A temperature sensor (such as thermocouple, resistance thermometer, or thermistor) shall be used to determine when the ice has been frozen to a temperature of -10°C. The sensing tip of the temperature sensor shall be placed the center of the water and as close to the DUT as feasible.

4.5 Criterion for the water being considered "completely frozen". This criterion applies when the chamber temperature is at the -10°C soak temperature. Once the temperature sensor (see 4.4) measures a temperature of -2°C or below, the frozen water is considered to be "completely frozen". At this point, an optical transmittance measurement can be obtained (if required). The temperature chamber temperature can be raised from -10°C to -2°C for the next step in the test.

4.6 Measurement substitution. Substitution for measurement support processes cited in Method 4010.

4.6.1 Radiant power measurement, method 6010. The change in optical transmittance in accordance with TIA-455-20 adhering strictly to the setup and test procedure specified in Measurement 2102 of MIL-STD-1678 part 2 shall be substituted for method 6010, the radiant power measurement. This freezing water immersion - ice crush test measurement shall cite: "The change in optical transmittance shall be measured during and after the test (from a baseline obtained before each test) in accordance with TIA-455-20 for transmitted power adhering strictly to the setup and test procedure specified in Measurement 2102 of MIL-STD-1678 part 2."

Source: https://assist.dla.mil -- Downloaded: 2016-12-31T21:08Z
Check the source to verify that this is the current version before use.

APPENDIX A

METHOD 4050

FREEZING WATER IMMERSION – ICE CRUSH

A.1. Purpose. This appendix provides method 4050 as formerly specified in DOD-STD-1678.

A.2 Order of precedence. Unless otherwise noted herein or in the contract, in the event of a conflict between the text of this document and the references cited herein, the text of this document takes precedence. Nothing in this document, however, supersedes applicable laws and regulations unless a specific exemption has been obtained.

A.3. SCOPE.

A.3.1 Crush force.-This method describes a procedure for determining the effect of crush force caused by freezing water upon the transmitted power of a fiber optics cable immersed in the freezing water. The ice crush effect on transmitted power is defined as.

$$R = \frac{\phi_2}{\phi_1}$$

Where Φ_1 and Φ_2 are the change in optical transmittance measured before and after freezing respectively.

A.4. TEST.

A.4.1 Specimen. The specimen shall be taken from a representative sample of fiber optics cable.

A.4.2 Apparatus. The apparatus shall be as specified herein.

A.4.2.1 Cable housing.-The housing shall consist of a 100 mm (3.9 inches) i.d. steel pipe of 6.4 mm (.25 inch) wall thickness. The length of the pipe shall be at least 380 mm (14.9 inches). A 150 mm (5.9 inches square steel flange of 6.4 mm (.25 inch) thickness shall be welded to each end and then capped with a 150 mm (5.9 inches) square steel plate of 6.4 mm (.25 inch) thickness bolted to it with four 6.4 mm (.25 inch) diameter bolts. Each end cap shall have a centrally located hole of diameter slightly larger than the cable diameter to accept the cable and a grommet or similar effective sealing device. The mating faces of the flange and plate shall be sealed using a neoprene O-ring under compression in matching circular grooves on these faces. Water shall be introduced into the housing through a 9.5 mm (.37 inch) diameter hole in the side of the housing. This hole shall be filled with an effective sealing plug or valve.

A.4.2.2 Freezing chamber. An environmental chamber capable of maintaining the housing and specimen at the required temperature ±1°C shall be used for temperature control.

A.4.3 PROCEDURE.

Step 1. The output of the source shall be adjusted to the center wavelength, bandwidth and intensity of interest.

Step 2. Both ends of the specimen shall either be prepared with standard terminations and finished so that the end faces are perpendicular to the axis of the specimen, or index matching fluid shall be used to couple the optical power between source and specimen and specimen and detector. The total length (L_k) of the specimens shall be determined.

Source: https://assist.dla.mil -- Downloaded: 2016-12-31T21:08Z
Check the source to verify that this is the current version before use.

Step 3. The specimen shall be placed in the cable housing and the ends and end caps sealed (see figure 5504 A-1).The housing shall be completely filled with water and placed horizontally in the chamber. The length, L_2, within the housing shall be determined. The lengths, L_1 and L_3, outside the chamber shall be as short as practical.

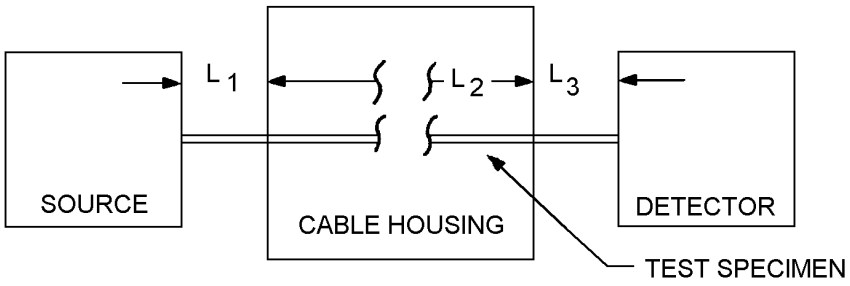

FIGURE 5504 A-1. Freezing chamber test apparatus.

Step 4. One end of the specimen shall be placed in the specified radiation beam so that the entire end is uniformly illuminated with the launch cone specified in the specification sheet.

Step 5. The other end shall be placed so that the axis of the output cone of radiation is perpendicularly incident on the detector and all of the radiation impinges on the detector. If an integrating sphere is used, the end shall be place with the sphere.

Step 6. A cladding mode stripper, if used, shall be applied to the fiber(s) in the specimen.

Step 7. The radiant power, Φ_1, shall be measured in accordance with the change in optical transmittance measurement shall be substituted for Method 6010, the radiant power measurement. This temperature test measurement shall cite: "The change in optical transmittance shall be measured [during and] after the test (from a baseline obtained before each test) in accordance with TIA-455-20 for transmitted power adhering strictly to the setup and test procedure specified in Measurement 2102 from MIL-STD-1678 part 2."

Step 8. The chamber temperature shall be lowered to -10°C at a rate of 20°C per hour. The chamber shall be maintained at that temperature for 6 hours. The temperatures shall then be raised to -2°C and maintained at that value for 1 hour.

Step 9. The change in optical transmittance, Φ_2, shall be measured in accordance with TIA-455-20 for transmitted power adhering strictly to the setup and test procedure specified in Measurement 2102 from MIL-STD-1678 part 2. If the specimen is a cable containing multiple fibers or multiple bundles, each fiber (or bundle) acting as a discrete optical transmission element, all transmission elements within the cable shall be tested for change in optical transmittance.

Step 10. The cable housing and specimen shall be allowed to return to room temperature. The specimen shall then be removed from the cable housing, dried and examined visually for damage.

Source: https://assist.dla.mil -- Downloaded: 2016-12-31T21:08Z
Check the source to verify that this is the current version before use.

A.5. RESULTS.

a. The ice crush effect, R, shall be reported.

b. The change in optical transmittance shall be measured in accordance with TIA-455-20 for transmitted power adhering strictly to the setup and test procedure specified in Measurement 2102 from MIL-STD-1678 part 2. The change in optical transmittance measurement shall be substituted for Method 6010, the radiant power measurement. This freezing water immersion – ice crush test measurement shall cite: “The change in optical transmittance shall be measured [during and] after the test (from a baseline obtained before each test) in accordance with TIA-455-20 for transmitted power adhering strictly to the setup and test procedure specified in Measurement 2102 from MIL-STD-1678 part 2.” shall be reported.

c. The length of the specimen, L_2, in the cable housing shall be reported.
d. The temperature of test, if other than -2°C, shall be reported
e. Visual observations of damage to the specimen shall be reported.

Source: https://assist.dla.mil -- Downloaded: 2016-12-31T21:08Z
Check the source to verify that this is the current version before use.

CONCLUDING MATERIAL

Custodians:
Army - CR
Navy - AS
Air Force - 85
DLA - CC

Reviewers:
AF – 11, 20

Preparing activity:
DLA - CC

(Project 60GP-2016-002)

NOTE: The activities listed above were interested in this document as of the date of this document. Since organizations and responsibilities can change, you should verify the currency of the information above using the ASSIST Online database at https://assist.dla.mil/.

Source: https://assist.dla.mil -- Downloaded: 2016-12-31T21:08Z
Check the source to verify that this is the current version before use.